Hydrocarbon Technologies, Inc.

interoffice
MEMORANDUM

to: Peizheng Zhou
from: Derrick Parfitt
subject: Run PB-08 Report (Final draft)
date: October 21, 1998

The final topical report for Run PB-08 (HTI 227-105) has been prepared. This report covers details on the material balance, process performance, including coal and resid conversion, and normalized yield. Please review and comment.

DE-92148-TOP-10

DIRECT LIQUEFACTION PROOF-OF-CONCEPT PROGRAM
Hydrocarbon Technologies, Inc., Lawrenceville, N.J.

A.G. Comolli
T.L.K. Lee
J.Hu
W.F. Karolkiewicz
D. S. Parfitt
G. Popper
P.Z. Zhou

FINAL

Topical Report
Bench Run 8 (227-105)

Work Performed Under Contract No. AC22-92PC92148-03

For

U.S. Department of Energy
Pittsburgh Energy Technology Center

By

Hydrocarbon Technologies Inc., Lawrenceville, NJ,

October 1998

TABLE OF CONTENT

EXECUTIVE SUMMARY.....1

I BACKGROUND AND RUN OBJECTIVES.....2

II SCOPE OF WORK.....3

Run Plan.....3

System Configuration.....3

III FEED MATERIALS.....5

IV RESULTS AND DISCUSSIONS.....6

V PRODUCT QUALITY.....8

VI ECONOMIC ASSESSMENT.....9

VII CONCLUSIONS.....11

APPENDIX.....35

A. Summary of Unit Operations.....35

B. Material Balance.....38

C. Properties of Pyrolysis Oils.....39

D. Special Samples for Consol, Inc.....40

LIST OF TABLES

Table 1. Run PB-08 (227-105) Plan....12
Table 2. Run PB-08 Process Performance....13
Table 3. Performance Comparison: Coal/Waste Coprocessing Using GelCat....14
Table 4. Properties of Second Stage Separator Overhead....15
Table 5. Properties of First Stage Separator Overhead....16
Table 6. Properties of Pressure Filter Solid....17
Table 7. Properties of Pressure Filter Liquid....18
Table 8. Liquefaction & Pyrolysis Units Feed Analysis.... 19
Table 9. Operating Conditions & Process Performance....20
Table 10. Economic Evaluation-Material Balance....21
Table 11. Hydrogen Balance, Utilities Production & Thermal Efficiency....22
Table 12. Capacities of Process Units & Offsites....23
Table 13. Liquefaction Plant Investment details....24
Table 14. Total Plant Investment Summary....25
Table 15. Product Cost Calculation....26
Table 16. Breakdown of Equivalent Crude Oil Price....27
Table 17. Comparison at Maximum Reactor Throughput....28
Table 18. Refinery Integration....29
Table 19. Price Sensitivity....30

LIST OF FIGURES

Figure 1. Simplified Schematic of HTI's Bench Unit.....31
Figure 2. Run PB-08 Process Performance.....32
Figure 3. Block Flow Diagram (Economic Evaluation).....33
Figure 4. Investment Cost Sensitivity.....34

EXECUTIVE SUMMARY

The eighth bench scale test of POC program, Run PB-08, was successfully completed from August 8 to August 26, 1997. A total of five operating conditions were tested aiming at evaluating the reactivity of different pyrolysis oils in liquefaction of a Wyoming sub-bituminous coal (Black Thunder coal). For the first time, water soluble promoters were incorporated into the iron-based GelCat to improve the dispersion of the promoter metals in the feed blend. The concentration of the active metals, Mo and Fe, was 100 and 1000 ppm of moisture-free coal, respectively. Black Thunder coal used in this run was the same batch as tested in HTI's Run POC-02.

Similar to Runs PB-01 through 7, this run employed two back mixed slurry reactors, an interstage gas/slurry separator and a direct-coupled hydrotreater. In addition to the hot vapor from the second stage separator, the first stage separator overhead liquid was also fed to the hydrotreater, which was packed with Criterion C-411 hydrotreating catalyst. Pyrolysis oil was produced off-line from a pyrolysis unit acquired from University of Wyoming. Solids rejection was achieved by purging out pressure filter solid. The recycle solvents consisted of O-6 separator bottoms and pressure filter liquid (PFL).

The Run PB-08 proceeded very smoothly without any interruptions. Coal conversion consistently above 90W% was achieved. High resid conversion and distillate yield have been obtained from co-processing of coal and 343°C+ (650°F+) pyrolysis oil. Light gas (C_1-C_3) yield was minimized and hydrogen consumption was reduced due to the introduction of pyrolysis oil, compared with conventional coal-derived solvent. Catalytic activity was improved by incorporating a promoter metal into the iron-based GelCat. It seemed that lowering the first stage temperature to 435°C might increase the hydrogenation function of the promoter metal. In comparison with previous coal-waste coprocessing run (PB-06), significant improvements in the process performance were achieved due to catalyst modification and integration of pyrolysis technique into liquefaction.

I BACKGROUND AND RUN OBJECTIVE

HTI has acquired a proven technology for the mild co-pyrolysis of used rubber tires and waste lube oils from the University of Wyoming. The process was developed by the University of Wyoming and Amoco Corporation. The technology is versatile and competitive and can also be used to pyrolyze other carbon based waste materials. The heavy, high sulfur oils derived from the pyrolysis can be processed along with coal and waste plastics in the direct liquefaction process.

This report summarizes results obtained from a pilot plant run, PB-08 (HTI run number 227-105) conducted at Hydrocarbon Technologies, Inc. (HTI) for the U.S. Department of Energy funded under POC program. The main objectives were i) to study the processing of oils derived from mild pyrolysis of scrap tires, waste plastics and waste lube oils, ii) to obtain the data required for economic comparisons with the DOE data base, and iii) to investigate the feasibility of integration of pyrolysis process into coal liquefaction.

II SCOPE OF WORK

Run Plan

The run consisted of five process conditions extending 17 days. As shown in Table 1, Condition 1 was designed as base-line which was operated for five days. The other conditions were operated for 3 days of each. Table 1 presents the run plan which was implemented without any modification. The space velocity of moisture-free (mf) feed was 640 Kg/h/m^3 per reactor stage. The target total recycle solvent to mf feed ratio was 1.2

In an attempt to compare the reactivity of different pyrolysis oils, the space velocity and catalyst loading were maintained constant throughout the entire run. The unit was operated at low-high temperature mode with the reactor at 435ºC and the second stage reactor at 449ºC. It was expected that, at low reactor temperature, the promoter might exhibit better performance for hydrogenation of coal liquid, while in the second stage, partially hydrogenated coal liquid would be hydrocracked at relatively high temperature.

Condition 1 was a coal-only condition which spanned five days to ensure steady state operation. Starting from Condition 2, 30 W% of dry coal was replaced by a mixture of plastics consisted of polypropylene, polystyrene and high density polyethylene. The reaction conditions and recycle strategy remained the same as Condition 1. In Condition 3, 30 W% of pyrolysis oil (343ºC+) derived from rubber tire and waste motor oil was blended with coal. Condition 4 was similar to Condition 3, except the change of pyrolysis oil. A mixture (50:50) of rubber tire and plastics was pyrolyzed using waste lube oil as carrier oil. The pyrolysis oil was distilled and 343ºC+ fraction was blended with coal. In Condition 5, a new concept was tested to use coal derived oil as carrier oil in pyrolysis. The Expected benefit was to attain self-sustained recycle operation without supplementary vehicle oil.

System Configuration

Run PB-08 was carried out using a 25 Kg/h two-stage pilot plant (Unit 227). A schematic flow diagram is depicted in *Figure 1*. The key components of Unit 227 include:

- A 31.8 liter Feed Tank (P-2)
- Two parallel Charge Pumps (J-1 & J-2)
- A 1000 cc coiled Preheater
- A 2000 cc backmixed First Stage Reactor (K-1)
- An Interstage Separator train (O-1A, O-2A)
- A 2000 cc backmixed Second Stage Reactor (K-2)
- A Second Stage Separator train (O-1 & O-2)
- A 800 cc fixed-bed direct coupled Hydrotreater (K-3)
- A Low Pressure Product Recovery train
    - Hot Separator Bottom Flasher (O-3)
    - Continuous Vacuum Still (CVS)
    - Reduced Pressure Still (RPS)
    - A Liquid/Solid Separation System
    - Toluene Extraction Unit (Conditions 1 & 2)
    or 12" Pressure Filtration Unit (Condition 3)
    or Batch Vacuum Still (Condition 4)

The major net product streams are product gases (1st and 2nd stages), dissolved gas (2nd stage only), hydrotreated product, and pressure filter cake. Internal Streams, that were sampled and analyzed, include first stage separator overheads, and first stage reactor samples.

Liquefaction Section

As shown in Figure 1, Black Thunder coal was premixed with recycle solvents and pyrolysis oil in a mixing tank prior to charging to the Feed Tank. Joined by feed hydrogen, the gas/feed slurry stream passed through a short residence time coiled preheater. Temperature of the feed mixture was raised to 140°C below the first stage reactor temperature prior to entering the bottom of the first reactor. An internal circulating pump returned a portion of the reactor slurry to the bottom of the reactor providing the backmixing action. The first stage light reaction product was cooled and separated from the main slurry. This light product, along with other light products, were fed to the direct-coupled hydrotreater. The main slurry was further hydroprocessed in the second stage backmixed reactor.

The hot vapor products from the second stage liquefaction reactor effluent was separated in the hot separator and fed directly into a fixed bed hydrotreater, K-3, without pressure reduction. Hydrogen, C_1-C_3 hydrocarbons, heteroatom gaseous products, water and volatile liquid products from the overhead of the hot separator passed through a mixing phase trickled bed hydrotreater. The main function of the hydrotreater was to stabilize the hydrocarbon products and to reduce heteroatom content. The hydrotrerater was packed with 900g of 3 mm Criterion C-411 trilobe catalyst. The temperature of the hydrotreater was kept at 379°C throughout the entire run.

In addition to the hot vapor from the separator, several other light product streams were also fed to the

hydrotreater. These streams included first stage overheads (water-free), atmospheric flash from the hot separator bottoms, and all other unit knockouts. These materials were blended and injected through a single pump.

III FEED MATERIALS

Feed Coal

The coal used for Run PB-08 was a Wyoming sub-bituminous coal (Black Thunder Coal). The pulverized coal was originally prepared by Empire Coke Co. of Alabama for HTI's Run POC-02 under a separate contract jointly funded by DOE and HTI. The moisture and ash content was 10.0 W% and 6.0 W% (dry basis), respectively. The low sulfur content of Black Thunder coal, 0.35 W%, was typical of Western sub-bituminous coal.

Startup and Makeup Oils

The startup solvent, L-814, is a petroleum based hydrotreated decanted oil and contains a unknown proportion of Black Thunder coal derived liquids. It has a very low API gravity of 0.4^{o} and contains 40.5 W% of materials boiled over 454°C. It has been used extensively as a startup oil for all pilot plant tests conducted at HTI. This startup solvent was used to bring the unit to reaction condition and was used a slurrying oil for the first couple of operating periods of Condition 1. It was phased out gradually as the run proceeded when more and more process derived recycle materials became available.

Hydrotreater Catalyst

There was no supported catalyst used in the first and second stage reactors in this run. The direct coupled hydrotreater was charged with 800 gm of Criterion C-411 trilobe catalyst (3 mm). The catalyst was presulfided during the startup of the run with TNPS. Also, TNPS was injected directly into the second stage reactor to maintain a high H_2S partial pressure throughout the entire run.

IV RESULTS AND DISCUSSION

The impact of three different pyrolysis oil on process performance is compared in this section. Throughout the course of the run the reactor temperature, pressure, space velocity and catalyst loading were maintained constant. Due to smooth unit operation, steady state was achieved during each workup period.

Overall Process Performance

The process performance under all conditions is presented in Table 2. In Condition 1, coal conversion of 93.9W% was achieved. 524ºC+ resid conversion and distillate yield were high. However, C_1-C_3 gas yield and hydrogen consumption from Condition 1 were higher than from other conditions.

The overall performance of Run PB-08 was superior as compared with similar runs (e.g. PB-06). Especially, resid conversion and distillate yield were 4-7 W% and 8-12 W% higher than similar conditions from previous runs.

Process performance of Run PB-08 is compared with that of Run PB-06 in Table 3.

Coal and 524ºC$^+$ Residuum Conversion

The SO_3-free coal conversions in Run PB-08 varied between 89.3 and 93.9 and did not bear any relationship with the type of pyrolysis oil used, as shown in Table 2 and Figure 2. In the absence of pyrolysis oil, high resid conversion was obtained from Conditions 1 and 2. The resid conversion declined when plastics was replaced by pyrolysis oil. The 524ºC+ resid conversion were not significantly affected by the type of pyrolysis oil, while the distillate yield seemed to be affected by the nature of the pyrolysis oil.

Distillate Yield (C4-524 ºC and IBP-343 ºC)

The C_4 -524ºC distillate yield varied considerably between 60.3 and 69.2 W% maf coal. The highest yield was obtained in Condition 4 when pyrolysis oil had been derived from a mixture of plastics and rubber tire. The low distillate yield was obtained from coal-only condition.

From Table 2, the yield of IBP-343ºC light distillate in Conditions 1 and 2 was significantly higher (40.85 and 42.57 W%) than that of other conditions(32 to 36 W%). Similarly, high resid conversion was also observed from these two conditions. It appeared that liquefaction of coal or coprocessing of coal and plastics favored the production of light distillate while coprocessing of coal and pyrolysis oil shifted product distribution to heavier distillate.

Hydrogen Consumption and Light C_1 -C_3 Gas Yield

Hydrogen consumption in Run PB-08 varied within a range of 4.43 to 7.05 W% maf coal. These values were in the same range as in previous coprocessing runs. It appeared that hydrogen donor ability of pyrolysis oil was higher than coal derived recycle solvents.

The C_1-C_3 gas yields range from 5.42 to 10.42 W% maf coal. Conditions 1 and 5 yielded more light gases.

In Conditions 2 through 4, C_1-C_3 gas yields were 2 to 4 W% lower as compared with coal only Condition 1 and the last Condition 5 where coal derived liquid was used as pyrolysis oil. The results demonstrated the advantage of using pyrolysis oil for coal waste coprocessing.

A significant portion of the overall gas make was generated from the first stage. It was observed that half of the C_1-C_3 and C_4-C_7 light hydrocarbon gases evolved from the first stage reactor, while even more (90 %) of the COx gases were discharged at the initial stage of the coal dissolution. The removal of gases from the first stage led to a reduction in hydrogen consumption and improved the efficiency of the second stage reactor due to less gas buildup and consequently the increased residence time of liquid reactant in the second reactor.

Comparison Between Run PB-08 and Run PB-06

Table 3 compares coprocessing performance of two pilot tests, PB-08 and PB-06. The improved performance in Run PB-08 indicates that adding promoters into the Fe based GelCat™ improves GelCat™ performance. It also appears that the newly acquired pyrolysis technique is superior over the fixed-bed type of pyrolysis operation employed during Run PB-06.

V PRODUCT QUALITY

Hydrotreated SOH Oil

This stream is the distillate from the direct coupled hydrotreater which is a major component of the total liquid products. In Run PB-08, the performance of the hydrotreater improved significantly over previous runs of the same program. The better performance was due to two factors. Firstly, the amount of catalyst (Criterion C-411) was increased from 400 grams to 800 grams. Secondly, there wasn't any high boiling material (<380ºC) entering the hydrotreater due to good control control of the system operation.

As shown in Table 4, the hydrotreated distillate had a typical boiling range of 62-396ºC. Its API gravity was high, above 41.9. The distillate was rich in hydrogen and had a H/C atomic ratio of 1.80-1.98. The nitrogen content was less than 1 ppm in all conditions while the sulfur content as low as 14 ppm was achieved.

First Stage SOH Oil

A few first stage SOH oil samples were analyzed, as shown in Table 5. Compared with hydrotreated SOH oil, the first stage SOH oil had a lower API gravity, 19.2-28.1, and contained a high percentage of 343ºC+ high boiling components with end point as high as 399ºC. The heteroatoms content of the first stage SOH oil was significantly higher than the hydrotreated SOH oil.

Pressure Filter Liquid(PFL) and Solid (PFS)

The PFS is an oil-containing solid material. This product stream was used for determining the extent of coal conversion based on the solubility of the PFS material in quinoline (Table 6). During Run PB-08, PFS was analyzed on a daily basis to control the solid concentration in recycle stream. Typically, the solid content of PFS varied from 47 to 62 W% depending on the control of recycle solid/MF coal ratio.

Pressure filter liquid was analyzed for API gravity and boiling point distribution. The properties are shown in Table 7,

VI ECONOMIC ASSESSMENT

Feed to the liquefaction unit was included Black Thunder sub-bituminous coal, plastics and pyrolysis oil. The pyrolysis oil was produced from tires, plastics and waste motor oil. The run featured an interstage separator, an in-line hydrotreater, and used dispersed iron catalysts with promoters.

Liquefaction and pyrolysis unit feed compositions are presented in Table 8, for the periods analyzed in this assessment of the run. Reactor operating conditions are shown in Table 9, which also summarizes the process performances and yields.

A block flow diagram is shown in Figure 3 for integration of pyrolysis with liquefaction. Oil from the pyrolysis unit is distilled, with the light C_4 - 650°F fraction going to product upgrading and the 650°F+ fraction being sent to liquefaction. Gases from pyrolysis are used as fuel, and carbon black is sent to product.

Table 10 presents the material balances. The advantage of plastics use is shown by the increase in the product yield from feed. When compared on the basis of the feed rates to liquefaction, the yield of products improves when pyrolysis is used. However, a comparison of the total feed to the complex shows that pyrolysis is no better than coal alone.

Table 11 summarizes hydrogen balances, utilities production and thermal efficiencies for the run conditions analyzed. Table 12 summarizes the capacities of the process units and offsites.

Liquefaction plant investment details are listed in Table 13, and the total plant investments costs are in Table 14, showing a marked decrease in cost per daily barrel for plastics and for pyrolysis oil operation, compared to coal-only operation.

Economics are summarized in Table 15, and the breakdown of the equivalent crude oil price is given in Table 16. Use of coal/plastics is seen to offer significant savings over coal-only operation. Use of pyrolysis also offers substantial savings. Table 17 compares cases at maximum reactor throughput. Finally Table 18 compares results using refinery integration.

Figure 4 shows the economic sensitivity of the investment cost for different feedstocks. Coal use is seen more sensitive than coal/plastics and coal/pyrolysis oil. Period 14 was selected as typical for the pyrolysis oil use in this Figure.

Price sensitivity for the various run periods is difficult to present graphically due to the large number of variables (tires, plastics, waste motor oil and coal, as well as byproduct credit for carbon black). Instead, Table 19 is a summary of the price increases for the various items that will individually result in an increased equivalent crude price of 5 percent (about $1.00/barrel) for the cases. For instance, when the plastics price is increased from no cost to $17.80/Ton in Period 8, the equivalent crude price increases from $23.09/B to $24.24/B. In Period 14 with far less plastics use, the plastics price can increase to almost $80/Ton for the same percent increase in its equivalent price. The Table points out the advantage of mixed plastics/tires use over tires alone in pyrolysis, except in terms of byproduct credit for carbon black.

In summary, use of pyrolysis combined with liquefaction appears promising. Use of plastics combined with

tires is probably more advantageous than tires alone. Use of plastics/coal mixtures continues to show economic promise over coal alone.

VII CONCLUSIONS

High resid conversion and distillate yield have been obtained due to co-processing of coal and 343°C+ pyrolysis oil. Light gas (C_1-C_3) yield was minimized, and hydrogen consumption was reduced. Catalytic activity was improved by adding water soluble promoter to the iron-based GelCat. Lowering the first stage temperature to 435°C may have increased the hydrogenation activity of the promoter in the catalyst. Economic evaluation has demonstrated that integration of waste pyrolysis into coal liquefaction is feasible.

Table 1. PB-08 (HTI 227-105) Run Plan

Conditions Periods Work-up Period	1 1-5 5	2 6-8 8	3 9-11 11	4 12-14 14	5 15-17 17
Space Velocity, mf fresh feed/reactor					
(kg/h/m^3)	640	640	640	640	640
Recycle/mf Feed Ratio	1.2	1.2	1.2	1.2	1.2
Flow Rate, g/h					
Coal (Black Thunder Mine)	1425	1000	1000	1000	1000
Plastics (HDPE/PP/PS=44/28/28)		385			
Pyrolysis Oils 343°C+ (Tire Derived, processed with waste lube oil)			385		
Pyrolysis Oils 343°C+ (Tire pyrolyzed with process derived oil)				385	
Pyrolysis Oils 343°C+ (Tire+Plastics Derived, processed with waste lube oil)					385
O-6 bottoms	1000	1000	1000	1000	1000
PFL	540	540	540	540	540
Temperatures, °C					
K-1	435	435	435	435	435
K-2	449	449	449	449	449
Hydrotreater	379	379	379	379	379
Preheater	300	300	300	300	300
Pressure, psig	2500	2500	2500	2500	2500
H_2 Flow Rate, SCFH					
K1	80	80	80	80	80
K2	35	35	35	35	35
Catalyst, ppm					
Fe/Mo gel Cat	1000/100	1000/100	1000/100	1000/100	1000/100
Phosphorous	100	100	100	100	100
H_2S to K-1,g/h	40	40	40	40	40
TNPS to K-2,g/h	16	16	16	16	16

Table 2 Run PB-08 Process Performance

RUN	PB-08	PB-08	PB-08	PB-08	PB-08
CONDITION	1	2	3	4	5
PERIOD	5	8	11	14	16
Coal Description (type)	BK	BK	BK	BK	BK
Hydrotreater (yes/no)	Yes	Yes	Yes	Yes	Yes
Interstage Separator (yes/no)	Yes	Yes	Yes	Yes	Yes
K-1, Catalyst type	Disp	Disp	Disp	Disp	Disp
K-2, Catalyst type	Disp	Disp	Disp	Disp	Disp
O-6 bottoms Recycle (yes/no)	Yes	Yes	Yes	Yes	Yes
Material Recovery, %	98.3	97.6	104.4	97.7	101.2
Space Velocity (lb/hr/ft3 stage 1)	36.99	35.96	35.68	40.42	38.81
Temperature K-1, F	815.0	815.0	815.0	815.0	815.0
Temperature K-2, F	840.0	840.0	840.0	840.0	840.0
Feed Type	Coal	Coal+PLs	Coal+Pyr Tire Deirved	Coal+Pyr Tire+PLs	Coal+Pyr CDO+Tire
Net Normalized Yields, W% maf fresh feed					
C1 gases	3.09	1.02	0.62	0.57	2.85
C2 gases	3.72	2.41	2.44	2.28	2.57
C3 gases	4.06	3.11	2.89	2.70	2.82
C4 gases	2.28	1.68	1.72	1.49	1.95
C5 gases	1.42	1.71	1.33	1.33	1.55
C6 & C7 gases	1.94	1.67	1.30	0.84	4.49
C1-C3 in Gases	10.75	6.44	5.83	5.45	8.13
C4-C7 in Gases	5.65	5.06	4.35	3.66	7.99
IBP-177 C (IBP-350 F)	10.50	15.39	9.89	10.74	9.41
177-260 C (350-500 F)	13.29	9.60	9.35	10.17	8.86
260-343 C (500-650 F)	17.38	17.89	14.60	15.66	14.66
343-399 C (650-750 F)	8.08	11.43	14.43	15.94	13.83
399-454 (750-850F)	3.03	4.44	7.59	7.21	6.05
454-524 C (850-975 F)	2.39	3.70	6.45	5.79	4.97
524+ C (975+ F)	9.63	10.49	10.47	8.81	11.13
Unconverted Coal / Coke	6.15	6.72	7.45	7.35	5.92
Water	13.04	10.72	10.17	10.44	8.46
CO	0.81	0.55	0.53	0.51	0.65
CO2	6.27	2.46	2.81	2.69	4.28
NH3	0.81	0.46	0.41	0.43	0.46
H2S	0.14	0.02	0.24	0.10	0.26
	107.91	105.37	104.56	104.94	105.06
Process Performance, W% maf fresh feed					
Ash Recovery (Balanced)	100.0	100.0	100.0	100.0	100.0
H2 Consumption by balance, SO3 free maf ff	7.05	4.60	4.43	4.44	4.80
Coal Conversion (SO3 Free)	93.9	90.3	89.3	89.4	91.5
524+ C Conversion	84.3	82.7	74.7	76.9	75.6
C4-524 C Distillates	60.3	67.5	66.7	69.2	65.8

Table 3. Performance Comparison: Coal/Waste Coprocessing Using GelCat™				
Run ID	PB-06-2	PB-08-2	PB-06-3	PB-08-4
Feed Comp.W%	Coal/Plastics	Coal/Plastics	Coal/Pyr Oil	Coal/Pyr Oil
Coal (Black Thunder)	67	70	67	70
Plastics	33	30		
343°C+ Pyr. Oil			33	30
Catalyst				
Fe GelCat™	1000	1000	1000	1000
Promoter	0	100	0	100
Space Velocity (kg/h/m^3)	560	640	655	640
K-1 Temp,°C	437	435	437	435
K-2 Temp,°C	446	449	446	449
Performance				
Conversion	91	90.3	91	89.4
C_4-524°C Yield	59	67.5	57	69.2
524°C+ Conv.	75	82.7	73	76.9
C_1-C_3 Gas Yield	7.9	6.39	8.8	5.42
H_2 Consumption	3.9	4.6	5.4	4.44
H_2 Efficiency	15.1	14.7	10.5	15.6

Table 4. Properties of Hydrotreated Separator Overhead (SOH)

Conditions	1	2	3	4	5
Periods	5	8	11	14	16
Gravity, ºAPI	35.4	36.4	41.3	41.9	40.8
IBP, ºC	85	73	62	63	60
FBP, ºC	358	396	382	386	389
Elemental Analysis, W%					
Carbon	86.50	86.82	86.47	85.90	85.87
Hydrogen	13.24	13.04	13.90	14.07	13.97
Sulfur (ppm)	154	148	16	20	14
Nitrogen (ppm)	<1	<1	<1	<1	<1
H/C Ratio	1.84	1.80	1.93	1.98	1.95
ASTM D-86 Distillation, W%					
IBP-177ºC	25.12	33.34	29.31	29.66	28.84
177-260 ºC	29.84	20.17	26.74	27.20	25.47
260-343 ºC	34.33	32.16	30.16	30.02	32.99
343ºC+	10.14	13.65	12.33	12.01	13.95
Loss	0.45	0.68	1.45	1.11	0.92

Table 5. Properties of First Stage Separator Overhead

Conditions	1	2	3	4	5
Periods	5	8	11	14	16
Gravity, ºAPI	19.2	23.6	27.7	28.1	24.5
IBP, ºC	73	74	71	69	67
FBP, ºC	343	399	396	396	394
Elemental Analysis, W%					
Carbon	85.25	86.04	84.78	85.33	85.02
Hydrogen	10.38	10.73	11.53	11.86	11.30
Sulfur	0.54	0.38	0.40	0.27	
Nitrogen	0.57	0.45	0.44	0.43	0.51
H/C Ratio	1.46	1.50	1.63	1.67	1.60
ASTM D-86 Distillation, W%					
IBP-177ºC	11.08	25.87	14.29	15.00	11.47
177-260 ºC	33.65	19.73	27.68	25.94	26.24
260-343 ºC	35.04	30.91	30.83	34.18	36.93
343ºC+	19.70	22.91	26.78	24.14	24.14
Loss	0.53	0.58	0.43	0.74	1.22

Table 6. Properties of Pressure Filter Solid

Conditions	1	2	3	4	5
Periods	5	8	11	14	16
Elemental Analysis, W%					
Carbon	62.80	62.00	65.27	65.75	66.52
Hydrogen	4.35	4.61	4.55	4.82	4.79
Sulfur (ppm)	1.35	1.28	1.12	1.20	1.22
Nitrogen (ppm)	0.71	0.71	0.83	0.86	0.88
H/C	0.83	0.89	0.84	0.88	0.86
ASTM Ash	26.31	27.08	24.34	23.70	22.18
S in ASTM ash	3.62	3.01	3.87	3.90	
Quinoline Insolubles (QI), W%	47.06	62.45	58.90	55.24	49.52
Ash in QI	25.80	27.17	24.04	22.70	23.20
On QI					
524°C+	96.30	96.30	95.66	94.78	94.22
Ash	54.30	45.94	40.90	42.61	43.74

Table 7. Properties of Pressure Filter Liquid

Conditions **Periods**	1 5	2 8	3 11	4 14	5 16
Gravity, ºAPI	-14.3	4.5	7.3	8.7	-0.1
IBP, ºC	256	262	238	245	236
Elemental Analysis, W%					
Carbon	82.22	89.13	88.58	88.52	89.15
Hydrogen	6.49	8.75	9.96	10.12	8.29
Sulfur (ppm)	0.89	0.75	0.73	0.36	0.37
Nitrogen (ppm)	1.04	0.75	0.61	0.58	0.98
H/C Ratio	0.95	1.18	1.35	1.37	1.17
ASTM D-1160 Distillation, W%					
	9.11	9.33	10.29	11.68	11.33
IBP-650ºC	31.07	35.87	45.78	49.51	45.53
650-850 ºC	11.27	14.13	16.67	15.35	11.14
850-975 ºC	48.05	40.10	27.06	23.27	34.63
975ºC+	0.50	0.58	0.20	0.10	0.37
Loss					

POC PB-08 (Run 227-105)

Table 8 Liquefaction & Pyrolysis Units Feed Analysis

	Period 5	Period 8	Period 11	Period 14	Period 16
Liquefaction Unit					
Feed Composition, W%					
Coal	100.00	71.99	72.20	72.02	72.20
Plastics	0.00	28.01	0.00	0.00	0.00
Pyrolysis Oil	0.00	0.00	27.80	27.98	27.80
Total	100.0	100.0	100.0	100.0	100.0
Ultimate Analysis, W%					
Carbon	71.20	74.95	74.60	74.65	74.93
Hydrogen	5.25	7.20	7.14	7.34	6.80
Nitrogen	1.42	0.72	0.75	0.76	0.86
Sulfur	4.02	0.39	0.64	0.51	0.63
Oxygen	7.87	12.60	12.72	12.60	12.63
Ash	10.24	4.14	4.15	4.14	4.15
Total	100.00	100.00	100.00	100.00	100.00
Pyrolysis Unit					
Feed Composition, W%					
Tires	0.0	0.0	53.8	18.2	33.6
Plastics	0.0	0.0	0.0	15.9	0.0
Waste Motor Oil	0.0	0.0	46.2	65.9	66.4
Total	0.0	0.0	100.0	100.0	100.0

POC PB-08 (Run 227-105)

Table 9 Operating Conditions & Process Performance

	Period 5	Period 8	Period 11	Period 14	Period 16
	Coal only	Coal/Plastics	Coal/PyroOil	Coal/PyroOil	Coal/PyroOil
Operating Conditions					
Space Velocity, lb/hr/ft^3	37.0	36.0	35.7	40.4	38.8
Temperature, ° F					
Stage 1	815	815	815	815	815
Stage 2	840	840	840	840	840
Recycle oil					
Rate, lb/lb feed	1.13	1.15	1.17	1.16	1.16
Residuum, W%	38.3	36.7	25.3	21.6	33.0
Solids, W%	6.4	7.4	6.6	7.2	4.6
Process Performance					
Feed conversion, W% MAF	93.9	93.3	92.6	92.7	94.1
Resid conversion, W% MAF	84.3	82.9	82.1	83.9	83.0
Process Yields, W% dry feed					
H_2S	0.13	0.14	0.23	0.10	0.25
NH_3	0.75	0.44	0.39	0.40	0.44
H_2O	12.19	10.20	9.73	9.96	8.09
$CO + CO_2$	6.62	2.87	3.20	3.05	4.72
C_1 - C_3	10.05	6.13	5.59	5.20	7.77
C_4 - 350° F	15.10	19.47	13.63	13.74	16.63
350 - 650° F	28.68	26.16	22.92	24.65	22.49
650 - 850° F	10.38	15.11	21.08	22.09	19.01
850 - 975 °F	2.23	3.52	6.17	5.52	4.76
975 + °F	9.01	9.98	10.03	8.41	10.64
Unconverted feed	5.75	6.39	7.13	7.01	5.66
Ash	5.75	4.14	4.15	4.14	4.15
Total	106.64	104.55	104.25	104.27	104.61
C_4-975°F	56.39	64.26	63.80	66.00	62.89

POC PB-08 (Run 227-105)

Table 10 Material Balance

	Period 5	Period 8	Period 11	Period 14	Period 16
	Coal only	Coal/Plastics	Coal/PyroOil	Coal/PyroOil	Coal/PyroOil
Feed to Pyrolysis Unit, T/D					
Tires	0	0	2,895	851	1,583
Plastics	0	0	0	745	0
Waste Motor Oil	0	0	2,488	3,078	3,122
Total	0	0	5,383	4,674	4,705
Feed to Liquefaction Unit, T/D					
Coal	12,000	8,639	8,664	8,642	8,664
Plastics	0	3,361	0	0	0
Pyrolysis Oil	0	0	3,336	3,358	3,336
Total	12,000	12,000	12,000	12,000	12,000
Total feed to complex, T/D	12,000	12,000	14,047	13,316	13,369
Liquid Products, B/D					
Gasoline	12,730	14,459	14,625	14,928	14,001
Diesel Fuel	30,078	34,163	34,554	35,270	33,082
Total	42,808	48,622	49,179	50,198	47,083
Liquids yield, Barrels/Ton					
Based on liquefaction feed	3.57	4.05	4.10	4.18	3.92
Based on total feed to complex	3.57	4.05	3.50	3.77	3.52
By-products					
Propane, B/D	4,989	3,929	3,675	3,422	3,593
Butane, B/D	2,687	2,092	2,139	1,896	2,388
Sulfur, T/D	43	34	54	41	53
Ammonia, T/D	90	53	47	48	53
Carbon black, T/D	0	0	1,222	843	1,152
Waste to Disposal, T/D	706	517	659	518	519

POC PB-08 (Run 227-105)

Table 11 Hydrogen Balance, Utilities Production & Thermal Efficiency

	Period 5 Coal only	Period 8 Coal/Plastics	Period 11 Coal/PyroOil	Period 14 Coal/PyroOil	Period 16 Coal/PyroOil
Hydrogen Balance					
Hydrogen Consumption, MMSCFD					
Liquefaction	300.7	205.0	192.1	192.6	208.2
Product Upgrading	5.9	6.7	6.7	6.9	6.5
Solution & Purge Loss	15.2	7.9	6.6	6.3	10.4
Total	321.8	219.6	205.4	205.8	225.1
Hydrogen used, SCF/Bbl of Product	7,510	4,520	4,180	4,100	4,780
Hydrogen production, MMSCFD					
via Partial Oxidation	148.7	184.4	205.4	194.6	187.8
via Steam Reforming	173.1	35.2	0.0	11.2	37.3
Total	321.8	219.6	205.4	205.8	225.1
Utilities Produced or Purchased					
Power, MW	232	199	258	226	240
Steam (600 Psig), 1000 lb/hr	224	77	95	68	132
Cooling water, 1000 GPM	159	108	129	113	135
Purchased Natural Gas, MMMBTU/D	102.2	64.7	39.6	47.3	57.6
Raw water, 1000 Gal/D	7,051	5,829	7,264	6,306	7,219
Thermal Efficiency					
Inputs, MMMBTU/D					
Feed	291.5	349.1	425.7	400.5	400.5
Natural Gas	113.4	71.8	43.9	52.5	63.9
Total	404.9	420.9	469.6	453.0	464.4
Outputs, MMMBTU/D					
Gasoline	69.7	79.2	80.1	81.8	76.7
Diesel	174.6	198.4	218.6	214.3	196.7
Propane	19.2	15.1	14.1	13.2	13.8
Butane	11.7	9.1	9.3	8.3	10.4
Carbon black	0	0	43.0	30.9	44.3
Sulfur & Ammonia	2.1	1.3	1.4	1.3	1.5
Total	277.3	303.1	366.5	349.8	343.4
Thermal Efficiency (HHV), %	**68.5**	**72.0**	**78.0**	**77.2**	**73.9**

POC PB-08 (Run 227-105)

Table 12 Capacities of Process Units & Offsites

Area	Description	Sizing Basis	Period 5	Period 8	Period 11	Period 14	Period 16
			Coal only	Coal/Plastics	Coal/PyroOil	Coal/PyroOil	Coal/PyroOil
100	Feed Preparation						
	Coal	T/D coal to liq'n	12,000	8,639	8,664	8,642	8,664
	Plastics	T/D plastics feed	0	3,361	0	745	0
150	Pyrolysis	T/D feed	0	0	5,383	4,674	4,705
200	Liquefaction	T/D total feed	12,000	12,000	12,000	12,000	12,000
300	Hydrogen Manufacture						
	Steam Reforming	MMSCFD H_2	173.1	35.2	0.0	11.2	37.3
	Partial Oxidation	MMSCFD H_2	148.7	184.4	205.4	194.6	187.8
400	Oxygen Plant	T/D Oxygen	1,844	2,289	2,549	2,413	2,332
500	Product Treating						
	Sour water treating	gpm sour water	1,567	1,197	1,193	1,140	1,256
	Sulfur recovery	T/D Sulfur	43	34	54	41	53
	Gas plant	lb/hr C_1-C_3	100,470	61,250	55,880	51,950	77,740
600	Upgrading						
	Catalytic Reforming	B/D gasoline	12,730	14,459	14,625	14,928	14,001
	Hydrotreating	B/D liquids	30,078	34,163	34,554	35,270	33,082
700	Utilities						
	Steam generation	M lb/hr	224	77	95	68	132
	Power generation	MW	232	199	258	226	240
	Cooling water	M GPM	159	108	129	113	135
800	Tankage						
	Product Liquids	B/D total liquids	42,808	48,622	49,179	50,198	47,083
	Propane & Butane	B/D	7,676	6,021	5,814	5,318	5,981
	Waste solids handling	T/D	706	517	659	518	519
900	General Offsites	T/D total feed	12,000	12,000	12,000	12,000	12,000

POC PB-08 (Run 227-105)

Table 13 Liquefaction Plant Investment Details

	Period 5	Period 8	Period 11	Period 14	Period 16
	Coal only	Coal/Plastics	Coal/PyroOil	Coal/PyroOil	Coal/PyroOil
Major Equipment Cost, $M					
Pumps	20,633	20,741	21,006	20,793	20,697
Reactors & Hydrotreater	43,049	40,547	40,910	37,475	41,752
Fired Heaters	12,815	13,123	13,230	13,008	13,361
Exchangers	19,395	18,797	18,619	18,628	19,586
Drums	29,080	27,362	25,404	25,392	29,108
Towers	7,903	7,408	7,284	7,225	8,008
Compressors	31,230	25,967	25,002	24,980	26,899
HPU	19,821	12,323	10,796	10,438	15,272
Total	183,926	166,268	162,251	157,939	174,683
Plant Investment, $MM					
Materials & Equipment	333.2	301.3	294.0	286.2	316.6
Labor & Subcontracts	144.2	130.3	127.2	123.8	136.9
Indirects	120.0	108.5	105.8	103.0	113.9
Total Liquefaction Plant Investment, $MM	597.4	540.1	527.0	513.0	567.4

POC PB-08 (Run 227-105)

Table 14 Total Plant Investment Summary

(Plant Investment in $MM, 1994 US Gulf Coast basis)

Plant Section	Period 5	Period 8	Period 11	Period 14	Period 16
	Coal only	Coal/Plastics	Coal/PyroOil	Coal/PyroOil	Coal/PyroOil
Coal Preparation	239.7	184.3	184.7	184.4	184.7
Plastics Preparation	0.0	14.6	0.0	4.4	0.0
Pyrolysis	0.0	0.0	209.4	98.2	136.3
Liquefaction	597.4	540.1	527.0	513.0	567.4
Hydrogen Manufacture	286.0	202.7	174.3	184.2	206.8
Oxygen Plant	72.1	83.9	90.4	87.0	85.0
Treating	306.7	221.7	212.0	200.9	259.7
Product Upgrading	108.8	116.2	119.5	118.8	115.5
Utilities	288.8	258.7	307.7	280.9	295.0
Tankage, Waste Handling	140.3	152.8	163.8	160.9	151.0
General Offsites	211.0	211.0	211.0	211.0	211.0
Subtotal	2,250.8	1,986.0	2,199.8	2,043.7	2,212.4
Fee, Contingency	449.7	396.7	439.6	408.5	442.0
Total Plant Investment	2,700.5	2,382.7	2,639.4	2,452.2	2,654.4
$/BPD of Product	63,080	49,000	53,670	48,850	56,380

POC PB-08 (Run 227-105)

Table 15 Product Cost Calculation

	Period 5 Coal only	Period 8 Coal/Plastics	Period 11 Coal/PyroOil	Period 14 Coal/PyroOil	Period 16 Coal/PyroOil
Operating Costs, $MM/year					
Coal, as received ($7.00/T)	32.46	23.37	23.44	23.38	23.44
Tires ($0.00/Ton)	0.00	0.00	0.00	0.00	0.00
Waste motor oil ($4.20/Bbl)	0.00	0.00	18.92	23.41	23.75
Plastics ($0.00/Ton)	0.00	0.00	0.00	0.00	0.00
Natural gas ($2.00/MMBTU)	67.17	42.52	26.00	31.08	37.82
River Water ($2.50/Mgal)	5.79	4.79	5.97	5.18	5.93
Catalysts & Chemicals	13.38	5.49	9.49	7.36	9.01
Dispersed Catalyst	8.71	8.71	8.71	8.71	8.71
Ash disposal($5.00/T)	1.16	0.85	1.08	0.85	0.85
Labor	22.99	23.47	23.15	24.12	23.96
Maintenance	20.59	21.03	20.74	21.60	21.46
Capital-Related	401.60	360.22	396.73	371.10	397.85
Total	573.85	490.45	534.23	516.79	552.78
By-product credits, $MM/year					
Propane ($12.50/B)	20.49	16.13	15.09	14.05	14.75
Butane ($14.50/B)	12.80	9.97	10.19	9.03	11.38
Sulfur ($52.00/T)	0.74	0.57	0.91	0.71	0.90
Ammonia ($120.00/T)	3.57	2.09	1.86	1.91	2.09
Carbon black ($140.00/Ton)	0.00	0.00	56.18	38.79	53.00
Total	37.60	28.76	84.23	64.49	82.12
Net Product Cost, $MM/year	536.25	461.69	450.00	452.30	470.66
Net Product Cost, $/B	38.14	28.91	27.86	27.43	30.43
Equivalent Crude Oil Price, $/B	**32.05**	**23.09**	**22.12**	**21.73**	**24.52**

POC PB-08 (Run 227-105)

Table 16 Breakdown of Equivalent Crude Oil Price

	Period 5	Period 8	Period 11	Period 14	Period 16
	Coal only	Coal/Plastics	Coal/PyroOil	Coal/PyroOil	Coal/PyroOil
Product, B/D	42,808	48,622	49,179	50,197	47,083
Contribution to Price, $/B					
Coal	1.94	1.17	1.15	1.12	1.22
Tires	0.00	0.00	0.00	0.00	0.00
Waste Motor Oil	0.00	0.00	0.93	1.12	1.24
Plastics	0.00	0.00	0.00	0.00	0.00
Natural Gas	4.01	2.13	1.28	1.49	1.97
Water	0.35	0.24	0.29	0.25	0.31
Dispersed Catalyst	0.52	0.44	0.43	0.42	0.45
Other Catalysts & Chemicals	0.80	0.27	0.47	0.35	0.47
Waste disposal	0.07	0.04	0.05	0.04	0.04
Labor	1.37	1.17	1.14	1.16	1.25
Maintenance	1.23	1.05	1.02	1.04	1.12
Capital Related Costs	24.01	18.02	19.50	17.84	20.73
By-product Credit	-2.25	-1.44	-4.14	-3.10	-4.28
Equivalent Crude Oil Price, $/B	**32.05**	**23.09**	**22.12**	**21.73**	**24.52**

POC PB-08 (Run 227-105)

Table 17 Comparison at Maximum Reactor Throughput

	Period 5	Period 8	Period 11	Period 14	Period 16
	Coal only	Coal/Plastics	Coal/PyroOil	Coal/PyroOil	Coal/PyroOil
Total feed to Liquefaction, T/D	12,000	14,000	15,190	15,190	12,000
Number of trains	3	3	3	3	3
Total liquid product, B/D	42,808	56,694	61,368	63,490	47,083
Liquefaction plant Cost, $MM	597.4	606.3	631.0	613.7	567.4
Total Plant Investment, $MM	2,701	2,666	3,116	2,914	2,654
Net Operating Cost, $MM/year	536.3	514.7	542.4	532.6	470.7
, $/B	38.14	27.63	26.90	25.54	30.43
Equivalent Crude Oil Price, $/B	32.05	21.92	21.25	20.01	24.52

POC PB-08 (Run 227-105)
Table 18 Refinery Integration

	Period 5	Period 8	Period 11	Period 14	Period 16
	Coal only	Coal/Plastics	Coal/PyroOil	Coal/PyroOil	Coal/PyroOil
Investment Cost, $MM					
Feed Preparation	239.7	198.9	184.7	188.8	184.7
Liquefaction	597.4	540.1	527.0	513.0	567.4
Pyrolysis	0.0	0.0	209.4	98.2	136.3
Hydrogen manufacture	358.1	286.6	264.7	271.3	291.8
Expand Existing Process Facilities	97.0	123.4	129.1	132.7	126.0
Expand Off-Site facilities	66.0	45.1	49.9	46.6	49.9
Subtotal	1,358.2	1,194.1	1,364.8	1,250.6	1,356.1
Contingency & Fees	362.8	342.2	378.7	354.5	380.7
Total	1,721.0	1,536.3	1,743.5	1,605.1	1,736.8
Equivalent Crude Oil Price, $/B	**22.64**	**16.47**	**15.28**	**15.40**	**17.03**

POC PB-08 (Run 227-105)

Table 19 Price Sensitivity

Increase in Item Price that will cause a 5% Increase in Equivalent Crude Price

		Price of item for 5% increase in equivalent crude price				
		Period 5	Period 8	Period 11	Period 14	Period 16
Item	base					
Coal, $/Ton	7.00	11.75	12.92	12.80	12.86	12.96
Plastics, $/Ton	0.00		17.80		79.50	
Waste Motor oil, $/B	4.20			8.50	7.71	7.73
Tires, $/Ton	0.00			23.00	78.60	42.80
Carbon black credit, $/Ton	140			91.30	69.00	86.70
Equivalent Crude Price, $/B		32.05	23.09	22.12	21.73	24.52

Figure 1 Simplified Schematic of HTI's Bench Unit

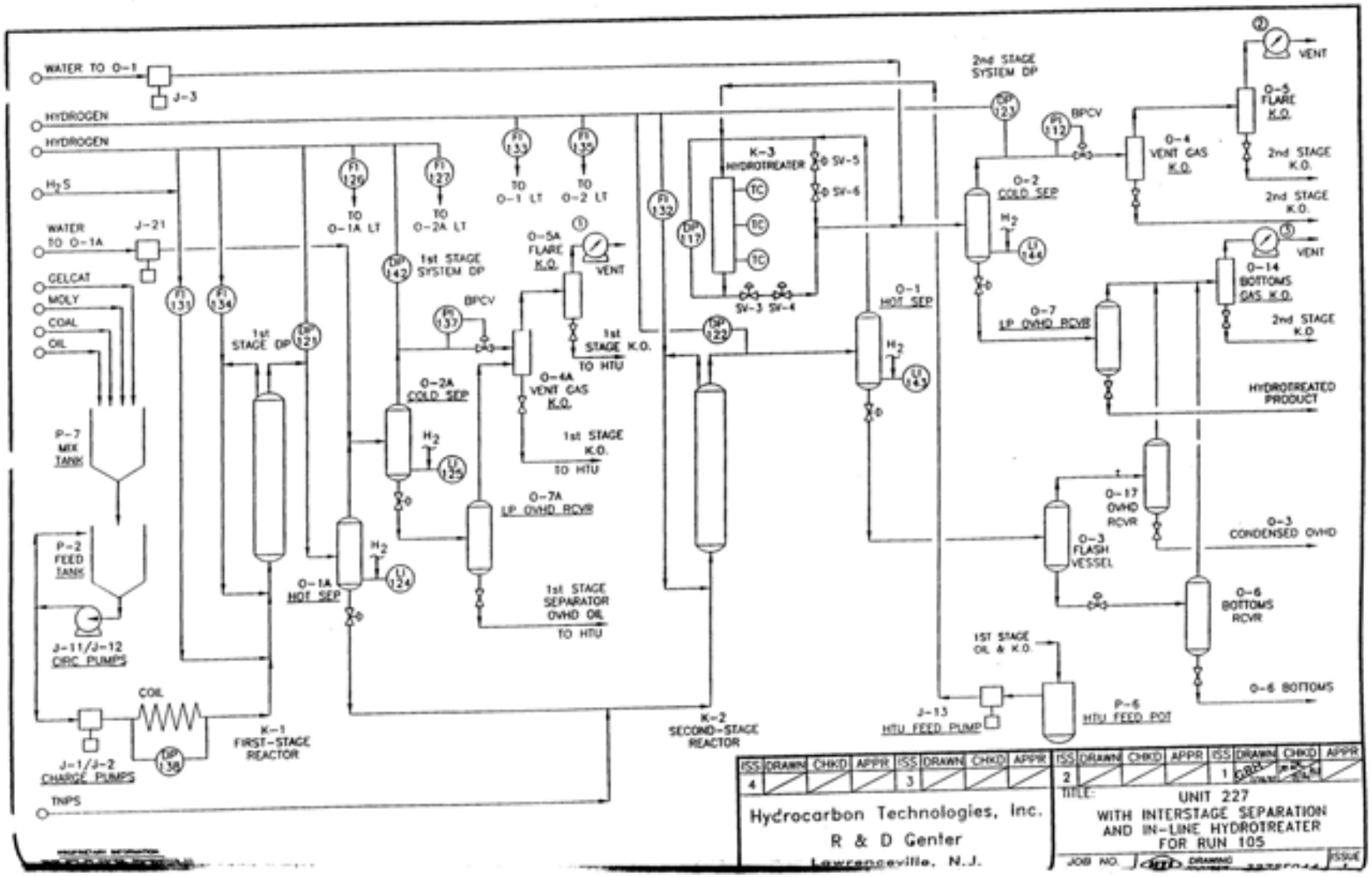

Figure 2
Run PB-08 Process Performance

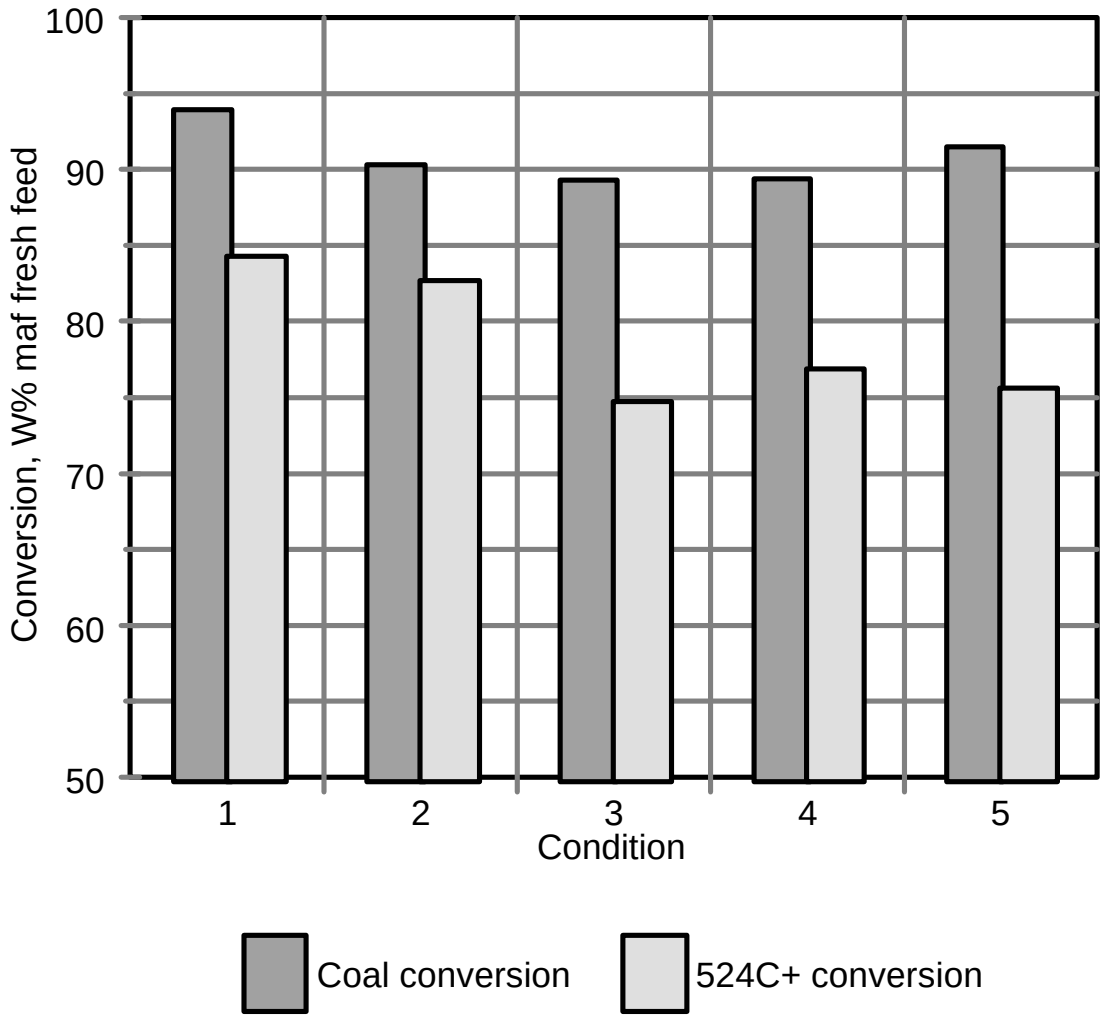

BLOCK FLOW DIAGRAM FOR PB-8

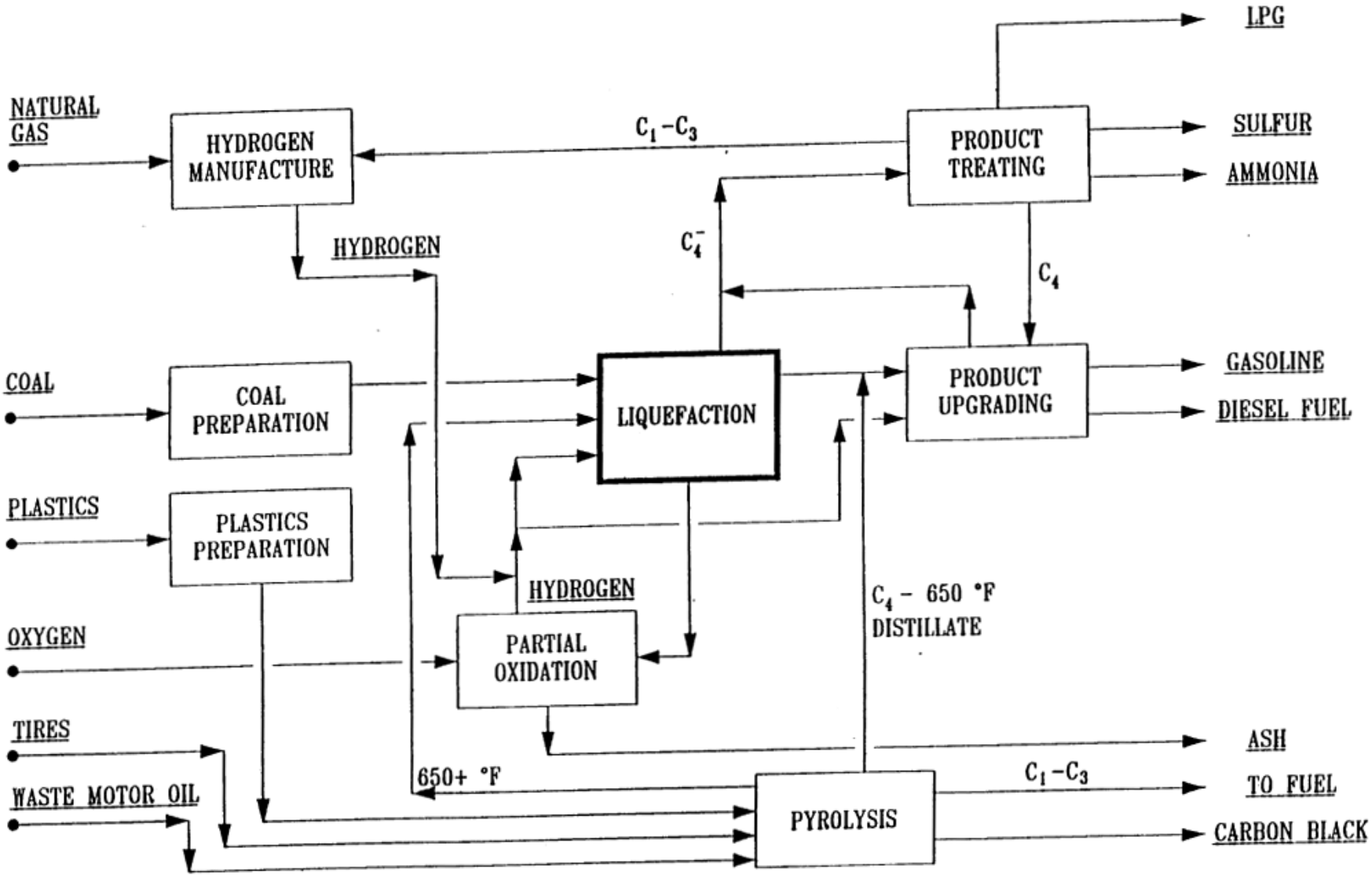

RPT00171/1

Figure 4
Investment Cost Sensitivity PB-08

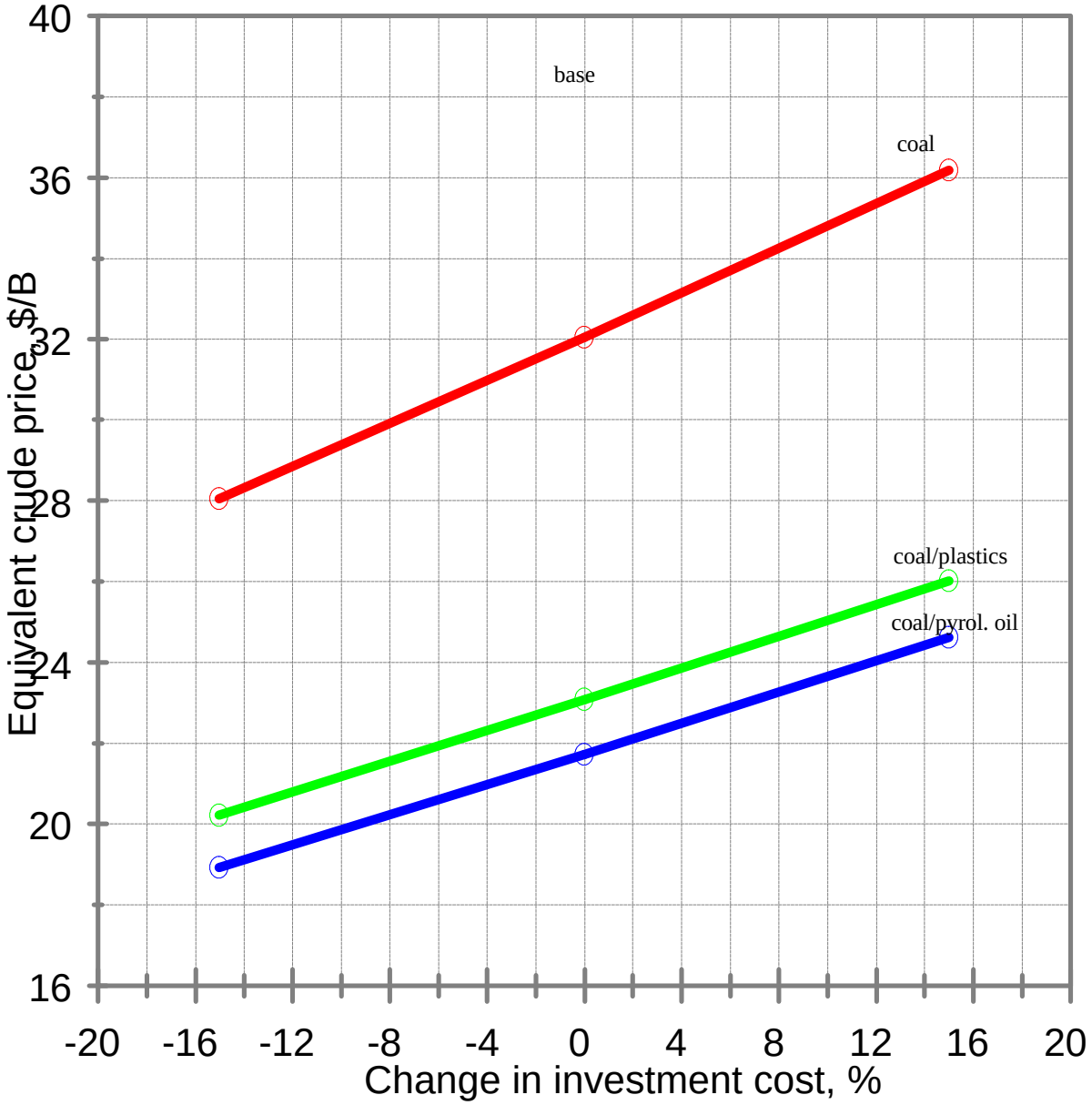

APPENDIX A. RUN 227-105 OPERATIONS SUMMARY

Unit Configuration

For Run 105, Unit 227 was set up to process oils derived from the mild pyrolysis of scrap tires, waste plastics, and waste lube oils in a two reactor stage, cascading pressure mode. For Run 227-105 both stages used HTI Fe/P (iron catalyst, L-898) and Molyvan-A, which are slurry catalysts added with the feed.

Figure 1, Drawing 227SF044, is a simplified flow diagram of Unit 227 for Run 105. Six hour feed blends were prepared in an alternate feed system (P-7) so large quantities could be homogeneously blended, heated, and then sent to the large feed tank (P-2). From P-2, the prepared feed blend was pumped through the pre-heater coil to the back-mixed first stage reactor (K-1). H_2S was also fed to K-1 as a sulfiding agent. The effluent from K-1 was fed to the Hot Separator (O-1A) where it underwent interstage separation before being sent to the back-mixed second stage reactor (K-2). Tert-nonylpolysulfide (TNPS) was also charged to K-2. The products from K-2 were then separated using a hot separator (O-1). The O-1 bottoms were depressurized, sent to the atmospheric flash vessel (O-3), and then finally withdrawn from the bottoms receiver (O-6). The O-6 bottoms product was subjected to plate filtration. The O-6 bottoms (product) were either recycled with the feed slurry or filtered for use in the internal-recycle purges (buffers) and wash tank (P-1). Overheads from O-1 flowed through the in-line hydrotreater (K-3) and then through a cold separator (O-2), producing separator overhead (SOH) and vent gas streams. Overheads from O-1A were also fed to the hydrotreater feed system.

Run Conditions

Run 227-105 operated for 17 periods at the conditions shown in Table 1. In Condition 1 the feed consisted of Black Thunder coal (**HTI-6213**) and recycle oils consisting of O-6 bottoms and pressure filter liquids. Condition 2 added a plastics blend consisting of High Density Polyethylene (HTI-6524), Polypropylene (HTI-6526), and Polystyrene (HTI-6525), in addition to the coal recycle oils. In Condition 3, plastics blend was replaced with pyrolysis oil (**L-931)** which consisted of rubber and waste motor oil (WMO). During condition 4, a new pyrolysis oil, **(L-933)**, replaced the **L-931.** This new oil consisted of rubber tires, WMO, and plastics. Condition 5 replaced the pyrolysis oil with **L-932**, which consists of rubber and coal derived oil (CDO).

Startup

During startup, the hydrotreater was charged with 902 g of HTI-6292 catalyst. Once the unit was pressure checked and insulated, operations commenced with establishing the proper flows of oil and gases, setting vessel temperatures, and increasing the reactor temperatures to 780 ^{o}F. See Table 1. The P-2 weight scale malfunctioned during start-up and had to be replaced.

Condition 1 (Periods 1-5)

Period 1 started at 0400 hours August 8 with the introduction of coal feed (**HTI-6213**) to the unit.

At 1330 hours, during Period 2, a 600 # DP was created in the coil and hydrogen flows were lost. At 1400 hours, the plug broke free, but at 1430 hours, the restriction returned. At 1500 hours, the restriction broke again and the coil was put on wash. 2010 g of L-814 were used, and the unit returned to normal.

During period 3B, excess piping vibration led to pumping problems. Vibrations were reduced by lowering heat and slowing the pump to 30 Hz. The P-2 weight scale was calibrated to ensure accuracy. Vibrations of feed circulation lines led to fluctuations in scale readings. These fluctuations were reduced by placing a 30# weight on the scale and raising the overall weight at 0900 hours during period 5 after readings were taken. Period 5 had problems with pressure filtration. Ahlstrom filter paper(24 microns) was used since it had the shortest filtration time. While the filters caught up, 4228 g total of PFL leftover from period 2 were used as part of the feed make-up.

At the conclusion of condition 1, a 407 g interstage sample was successfully retrieved.

Condition 2 (Periods 6-8))

Condition 2 started at 0400 hours on August 13 with the introduction of plastics to the feed blend at a rate of 386 g/hr. The coal feed was reduced to 1000 g/hr and all other parameters remained the same.

At 0950 hours during period 6, the P-7 circulation line plugged, disrupting the 1000 hour feed transfer from P-7 to P-2. To continue feed to the unit, 2883 g of period 1A excess PFL was charged to P-2. A total of 6969 g of period 1A excess PFL was also charged to P-7 between 1000 and 1200 hours to clean the restriction. At 1200 hours, the restriction cleared and the blend was circulated for 20 minutes in P-7 before being transferred over to P-2.

During the first period of condition 2, the majority of the piping vibrations went away. At 1000 hours during period 7, the bypass to the viscometer was opened because of an 80 lb. pressure drop. This DP caused feed transfer problems so the bypass was opened.

At the conclusion of period 8, a 418 g interstage sample was successfully retrieved.

Condition 3 (Periods 9-11)

Condition 3 began at 0400 hours on August 16, when the pyrolysis oil **L-931** (a pyrolyzed blend of WMO and rubber tires) was fed to the unit.

The second stage buffer pump stopped working during period 9, and had to be serviced. The Brooks Mass Flow Controller (227FI135) to the cold separator O-2A was replaced because it had water inside and as a result it was not working properly during period 9. The TNPS pump shaft had to be replaced. A restriction developed in the 1st stage buffer line during period 10. After some sludge was removed the buffer system was operating normally. Also during period 10, the discharge checks on the feed pumps had to be replaced.
At the conclusion of period 11, a 430 g interstage sample was successfully retrieved.

Condition 4 (Periods 12-14)

Condition 4 commenced at 0400 hours on August 19, with pyrolysis oil **L-933** (WMO, rubber tires, and plastics pyrolized blend) replacing **L-931** at the same feedrate.

During period 14 at 1100 hours, the 1st stage ventmeter was replaced due to an unexplained vent rate drop-off. The hydrogen flowmeters to K-1, 227FI131 and 227FI134, were also changed to ensure their proper operation. The operator noted that moisture was found in the K-1 Brooks flowmeter, 227FI131. At 1900 hours during period 14, the level control valve to the hot separator O-1A plugged and would not pass. The bypass had to be opened on occasion to lower the level. At 2130 hours during period 14, the same control valve problems were encountered with the cold separator O-2. In both cases, the plugging went away after stroking the valve for awhile.

At the conclusion of period 14, a 418 g interstage sample was successfully retrieved.

Condition 5 (Period 15-17)

The final condition started at 0400 hours on August 22, with **L-932,** a pyrolyzed blend of CDO and rubber tires, used as feed. Black Thunder Coal (HTI-6213) and recycle oil were also used for the 1000 hour blend.

At 0915 hours during condition 17, the heat tape was replaced on the line from O-1A to O-2A because it was no longer working. At 0950 hours, the feed pump stopped working and would not restart. The pump was pulled and replaced; however, for approximately three hours and forty-five minutes the pressure filter liquid was fed via the wash pot, P-1, to the unit.

At the end of period 17, a 428 g interstage sample was successfully retrieved and the normal shutdown procedure was implemented.

Shut-down and Inspection

During shutdown, the winding heating the viscometer lines associated with controller, 227TC35, burned out and had to be replaced. As a result of the cooler temperatures, the viscometer plugged but was eventually cleared (approximately 2 hours later) and able to be washed during shutdown. The shut-down of the unit was completed with termination of liquid flow at 1300 hours, August 26.

Inspection of the reactor heads showed wear and aging. Maintenance informed operations that although the heads passed the hydro-test, they would be in need of replacement soon.

Appendix B: Material Balance for Run PB-08

CONDITION	1	1	1	1	1	2	2	2	3	3	3	4	4	4	5	5	5
PERIOD	1	2	3	4	5	6	7	8	9	10	11	12	13	14	15	16	17
Coal Description (type, drum#)	BK	BK	BK	BK	BK	BK	BK	BK	BK	BK	BK	BK	BK	BK	BK	BK	BK
FEEDS, gms																	
Black Thunder	32535	35749	33229	33464	30393	17681	18953	20870	23000	22000	20771	23000	23881	23473	25972	22598	13414
Plastics	0	0	0	0	0	6825	7316	8119	0	0	0	0	0	0	0	0	0
Pyrolysis Oil	0	0	0	0	0	0	0	0	12095	8470	7997	8855	9194	9120	9999	8700	7747
TNPS	433	416	443	438	451	414	390	401	366	361	430	446	448	428	412	410	430
H2S	843	300	329	333	335	316	330	311	327	317	335	335	346	321	316	342	332
HTI Fe Catalyst	347	376	350	352	320	265	284	313	345	330	312	345	358	352	312	339	302
PFL	15208	15637	14188	14249	12125	11146	11293	12328	10415	14021	12927	13779	14192	14373	15470	13624	22470
O-6 Bottoms	22007	25087	23319	23483	21328	17681	18953	20870	23000	22000	20771	23000	23881	23473	25972	22598	20122
Water	15821	14679	15019	14603	14522	15432	15648	14623	14963	14079	14738	14598	14781	14182	14435	14671	14144
Hydrogen Feed	7339	7335	7490	7343	7339	7372	7337	7344	7344	7344	7344	7344	7348	7357	7399	7403	7392
TOTAL FEED	94534	99580	94367	94265	86813	77131	80504	85179	91855	88922	85625	91702	94429	93079	100287	90684	86352
PRODUCTS, gms																	
Hydrogen in Product Gases Gases	6503	5939	5552	5498	5462	6078	6021	6007	5825	6111	5859	5634	5674	5204	5241	5304	5526
Product Gas (H & N free)	7416	8850	7646	7623	7083	5258	5223	4461	5383	3775	4876	3849	4667	4481	6123	7352	7380
PFC	801	626	406	5543	6880	3534	4249	4606	6557	6956	5226	5400	5779	6065	4956	5970	3774
PFL	27847	21718	15815	13311	13156	6366	15825	16428	19819	15673	23410	17170	16940	21983	14868	21507	21550
HTU Product	7589	13602	14703	12700	11140	9621	11515	11768	9776	9267	10247	10080	10486	10625	9954	10259	9402
O-6 Bottoms	22800	24000	28000	23000	21330	21000	18953	20807	23000	22000	20771	23000	24000	23473	30000	22598	20122
SOH-H2O	16969	19383	15556	15059	20245	21845	19475	19065	16419	16353	19005	20406	16930	19095	16495	18825	16578
TOTAL PRODUCTS	89925	94118	87678	82734	85295	73702	81260	83142	86779	80135	89395	85539	84476	90926	87637	91814	84331
RECOVERY, W%	95.1	94.5	92.9	87.8	98.3	95.6	100.9	97.6	94.5	90.1	104.4	93.3	89.5	97.7	87.4	101.2	97.7
Liquid Closure, W%	87.2	86.0	85.7	80.1	91.5	89.4	95.7	93.4	89.4	86.1	100.5	90.2	85.1	94.8	82.1	95.0	90.5
Coal Conversion, W% maf coal (So3 free)		89.0	92.7	94.2	93.9	93.6	92.1	90.3	90.8	90.6	89.3	89.6	90.2	89.4	90.2	91.5	90.8
HYDROGEN CONSUMPTION																	
Metered Cons., W% maf coal	2.9	4.4	6.6	6.2	7.0	8.3	7.9	7.3	7.5	6.4	8.1	8.4	7.9	10.4	9.4	10.5	15.8
Metered Cons., W% maf frsh fd	2.9	4.4	6.6	6.2	7.0	5.8	5.5	5.0	4.7	4.4	5.6	5.9	5.5	7.2	6.6	7.3	9.5
UN-NORMALIZED GAS YIELDS, W% maf fresh feed																	
K-1 & K-2 : C1-C3 Gas Yield	9.7	11.2	11.3	10.6	10.2	8.7	8.3	6.1	6.5	5.5	6.6	5.3	5.8	5.3	7.8	8.6	14.5
K-1 & K-2 : C4-C7 Gas Yield	6.7	5.5	5.0	5.0	5.3	5.5	4.9	4.7	3.7	3.7	4.9	3.8	3.9	3.5	4.8	8.3	11.7
K-1 & K-2 : COx Gas Yield	6.0	7.0	5.6	6.2	6.6	3.4	3.5	2.8	2.8	2.0	3.7	1.5	3.2	3.1	3.0	5.1	5.1
K-1 : C1-C3 Gas Yield	4.1	4.6	4.9	4.8	4.3	3.9	3.6	2.8	2.7	2.3	2.9	2.0	2.2	2.0	3.5	3.6	7.1
K-1 : C4-C7 Gas Yield	1.9	2.7	2.4	2.5	2.7	2.6	2.0	2.0	1.5	1.6	2.2	2.0	1.7	1.5	1.8	5.0	7.0
K-1 : COx Gas Yield	5.9	6.8	5.5	6.0	6.4	3.3	3.3	2.7	2.6	1.9	3.6	1.4	3.1	2.9	2.9	4.8	4.9
% Total C1-C3 from Stage 1	42.8	40.9	43.8	45.2	42.0	44.6	42.7	46.5	41.4	42.0	43.2	38.3	38.4	37.4	44.6	42.4	48.9
% Total C4-C7 from Stage 1	28.1	49.0	47.3	50.9	51.1	46.8	41.6	41.3	39.9	43.6	44.5	51.7	43.1	42.0	36.7	59.5	59.3

APPENDIX C. PROPERTIES OF PYROLYSIS OILS

Conditions	3	4	5
HTI ID#	L-931	L-933	L-932
Gravity, ºAPI	26.1	29.0	
IBP, ºC	319	278	
FBP, ºC	500	515	520
Elemental Analysis, W%			
Carbon	86.23	86.30	87.72
Hydrogen	12.40	13.08	11.23
Sulfur	0.912	0.470	0.887
Nitrogen	0.14	0.16	0.51
H/C	1.73	1.82	1.54
ASTM D-1160 Distillation, W%			
IBP-650ºC	4.57	4.70	20*
650-850ºC	76.24	78.69	65*
850-975ºC	15.73	16.33	15*
975ºC+	0.0	0.0	
Loss	0.46	0.22	

By simulated Distillation

APPENDIX D. SPECIAL SAMPLES FOR CONSOL INC.

COLLECTION PERIODS W-ups - 5,8,11,14,17

SAMPLE STREAM	AMOUNT, GM
Hydrotreated SOH Oil (2nd stage)	1.0 gal
SOH water (2nd stage)	250
1st stage SOH (Collected immediately after W-up period)	50
1st stage SOH water	100
PFL	150
PFC	150
Teo	150
TES	150
Pyrolysis Oils(All W-ups)	250
O-6 BOTTOMS (all W-up periods)	150
FEED SLURRY (all W-ups)	200
FEED Coal (all W-ups)	200
FEED Plastics (Condition 2)	150
INTERSTAGE SLURRY SAMPLE(after W-up)	150
L-814 (once per run)	200