CONF-8908222--4 EGG-M-89047

1162-34

EGG-M--89047

DE90 009764

Applications of diffraction moire interferometry to the creation of unique identifying marks

V. A. Deason and M. B. Ward

Idaho National Engineering Laboratory
EG&G Idaho, Inc., P.O. Box 1625, Idaho Falls, ID 83415
(208) 526-2501

Received by OSTI
APR 23 1990

ABSTRACT

With the development of the portable diffraction moire interferometer, it became possible to imagine the use of subtly distorted or aberrated diffraction gratings as unique markers. The portable system, described in another report, provides a simple and convenient method for accurately measuring the degree of distortion of an aberrated diffraction grating so as to uniquely determine the identity of the grating. The concept, technique, devices, and data reduction are described for this unusual application of diffraction gratings, interferometry, and optical fibers.

1. INTRODUCTION

In certain situations, it is necessary to provide a means of uniquely marking items in such a way as to preclude counterfeiting, removal, and replacement or alteration of the mark without detection. Numerous techniques have been suggested, including electronic, optical, and biological methods. The purpose of this paper is to describe one possible optical technique.

This technique of marking is dependent on the properties of diffraction gratings, and on a related method, diffraction moire interferometry,[1] for reading out the distortions inherent in such gratings. The term "moire" was originally applied to this new method by analogy with an earlier less sensitive technique that, while fundamentally different, has certain mathematical and conceptual similarities to the new high precision technique. Diffraction moire is a true form of interferometry but is characterized by several unique features.

1. The light used is produced by a laser. The type of laser is immaterial, as long as detection of the interference fringes is possible at that laser's wavelength.

2. The light is used to illuminate a diffraction grating which consists of an exceedingly fine pattern of nearly parallel grooves resembling a corrugated roof but having a groove spacing of less than 0.001 mm and a groove depth of about 1/2 the spacing.

3. For diffraction moire, two beams simultaneously illuminate the grating, doubling the effect of the grating distortion and hence doubling the sensitivity to distortions in the grating.

4. Since the grating is shiny (being metallized), a troublesome effect called laser speckle is largely absent. Speckle plagues other laser based measurement methods such as holography, holographic interferometry, and speckle interferometry.

A diffraction grating, when illuminated by light, generates multiple diffracted beams whose direction of propagation is determined by the properties of the grating,

DISTRIBUTION OF THIS DOCUMENT IS UNLIMITED

MASTER

DISCLAIMER

This report was prepared as an account of work sponsored by an agency of the United States Government. Neither the United States Government nor any agency thereof, nor any of their employees, makes any warranty, express or implied, or assumes any legal liability or responsibility for the accuracy, completeness, or usefulness of any information, apparatus, product, or process disclosed, or represents that its use would not infringe privately owned rights. Reference herein to any specific commercial product, process, or service by trade name, trademark, manufacturer, or otherwise does not necessarily constitute or imply its endorsement, recommendation, or favoring by the United States Government or any agency thereof. The views and opinions of authors expressed herein do not necessarily state or reflect those of the United States Government or any agency thereof.

DISCLAIMER

Portions of this document may be illegible in electronic image products. Images are produced from the best available original document.

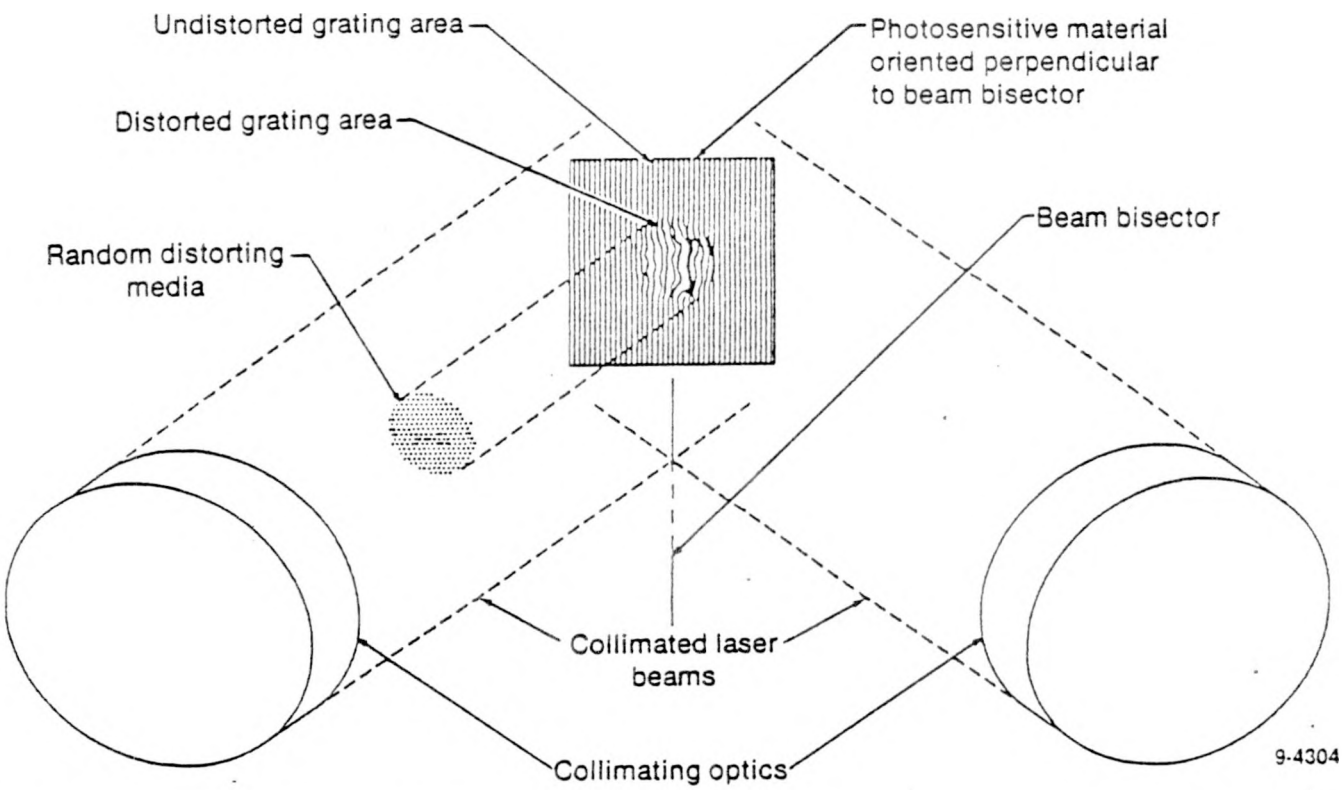

Fig. 1. Generating a distorted diffraction grating.

3.1 Diffraction moire interferometry

This method was originally developed to aid the evaluation of the deformation properties of modern complex materials. The method, while relatively new, has proven to have many advantages over conventional techniques for measuring material deformation under load. Among these advantages are higher quality data, less ambiguous interpretation, simplified alignment, great sensitivity, and the potential for automated data reduction. An excellent overview of the techniques of diffraction moire interferometry has been prepared by Dr. D. Post, who is credited with the development of the method as a practical procedure.[1]

3.2 The method

In practice, one first prepares the specimen for replication of the grating by sanding the surface with 600 grit paper. The surface must be reasonably flat, although we have been successful in using the technique on the surface of 10-in. diameter composite (fiber reinforced) cylinders. One then applies a layer of adhesive, which may consist of epoxy, silicon rubber, UV curing materials, or other suitable substance. A grating mold, which has been previously prepared, is laid face down in the adhesive and loaded to expel excess glue. When the glue sets, the mold is removed and the grating is ready for inspection. In the case of ID, the grating will need to be protected by an overcoat (this will be discussed later). The entire process of making and applying these gratings is shown schematically in Fig. 3.

In order to read out the distortions in the grating, one must illuminate the grating with two mutually coherent laser beams at a specific angle (Fig. 3 bottom).

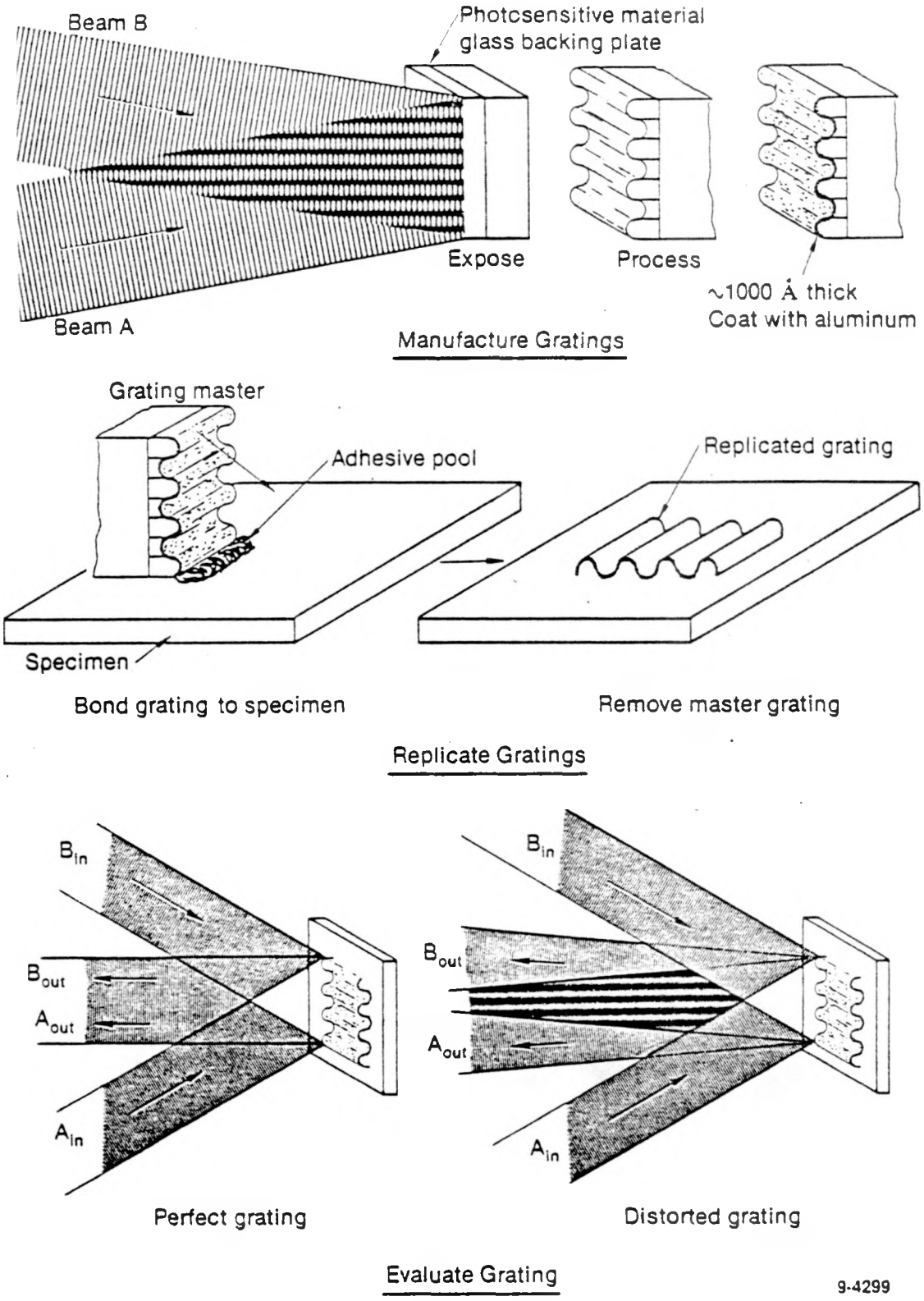

Fig. 3. Making and applying diffraction gratings to specimens.

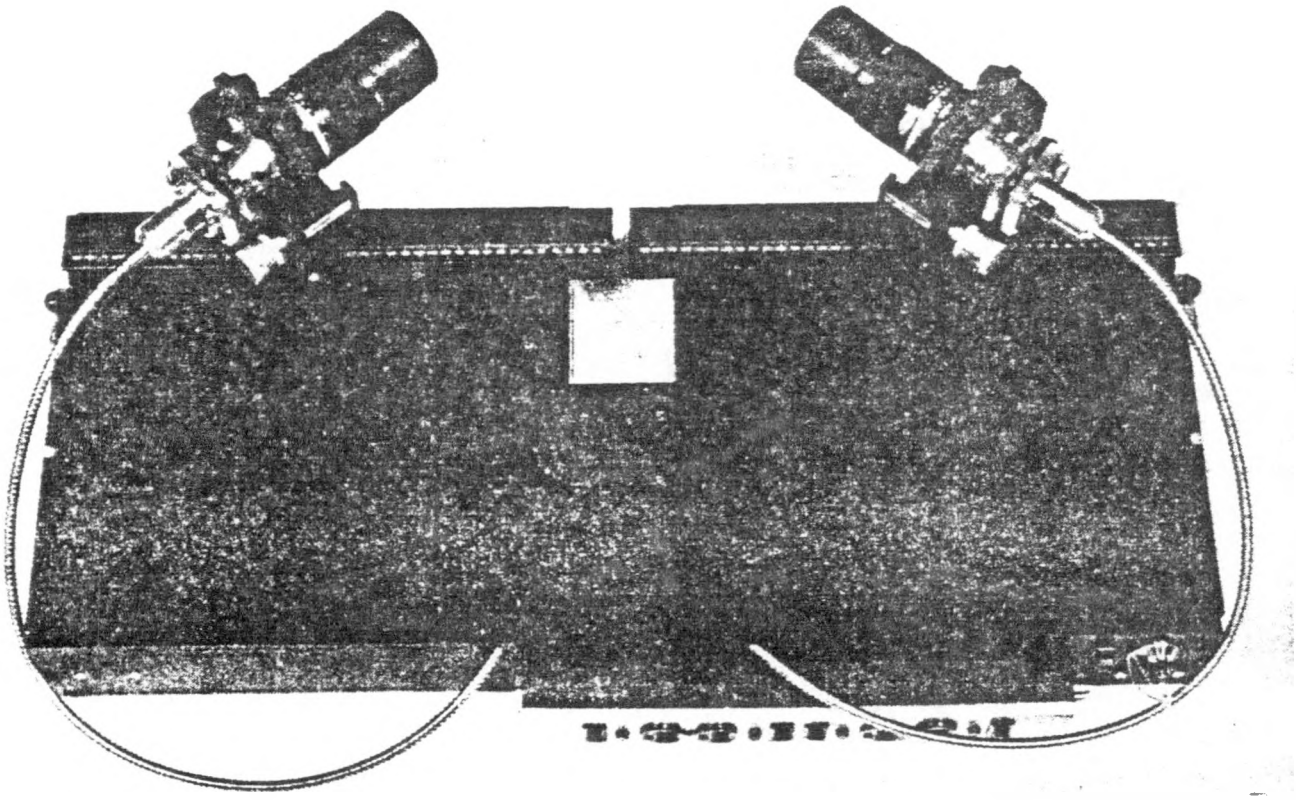

Fig. 5. Portable readout unit developed at the INEL.

3.4 Automated data reduction

We are pursuing two separate routes to automating the data reduction and retrieval process. Internally, we are developing a software package aimed specifically at the identification application. At the same time, we are evaluating a commercially available package which was originally developed for the optics manufacturing community. The latter system is used to analyze the interference fringe patterns created when an optical system is tested for defects. These patterns are identical in appearance with those produced by diffraction moire interferometry (whether for ID or for materials studies). However, the physical interpretation of the pattern is different. For the ID application, we are not actually interested in a quantitative interpretation of the data in engineering units. Instead, we need to compare two patterns so as to determine if the mark has been altered.

4. TRANSFERABILITY

The problem of transferability is a difficult and complex one. It may be possible to gently remove the grating along with a small quantity of surface material and reattach it to some other substrate. Counter-arguments can be made that one might detect such rebonding. However, we feel that, due to the extreme precision with which diffraction moire can measure deformation, attempts to move a grating will introduce distortions which can be detected. Clearly, proof is required, and such studies are under way.

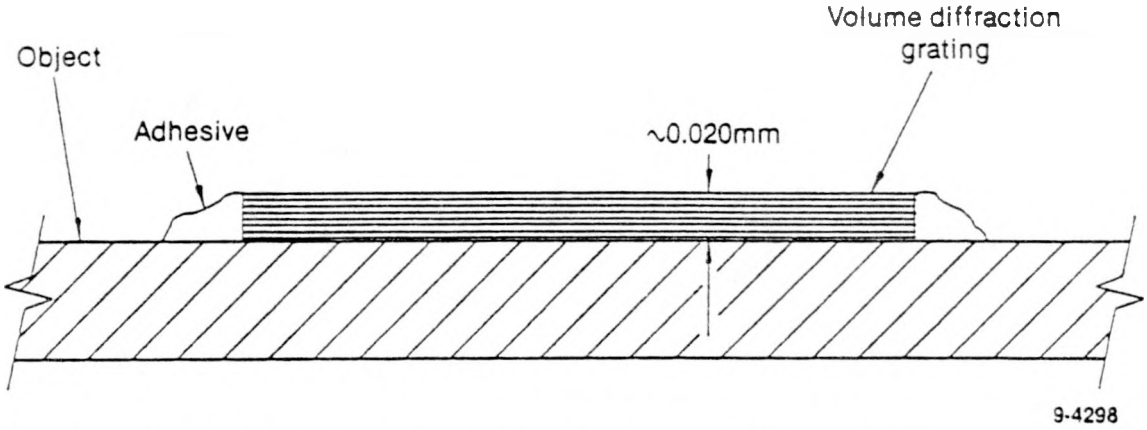

Fig. 6. Volume grating showing the buried periodic structure.

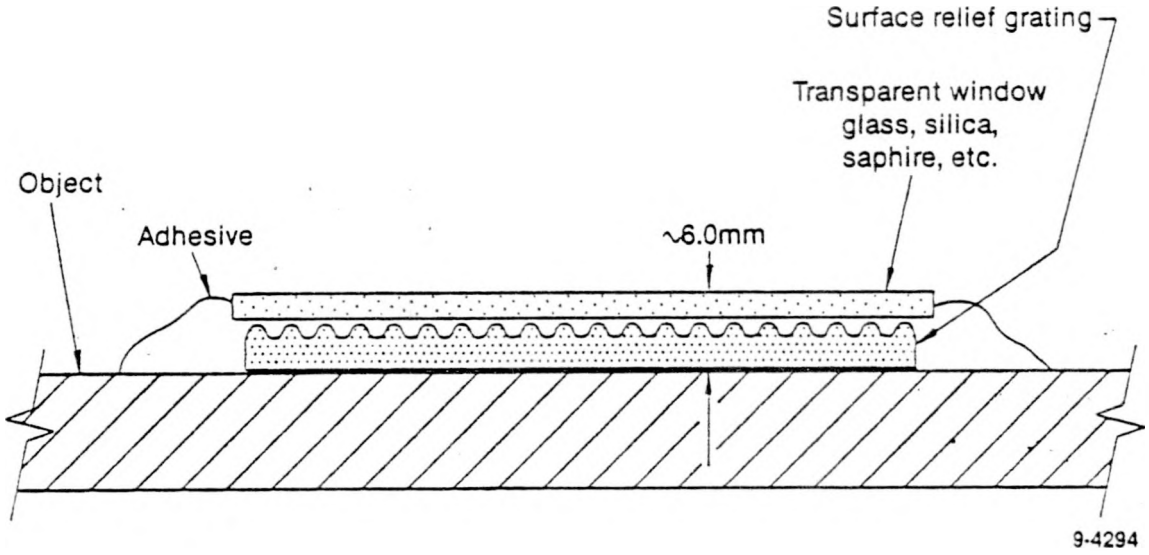

Fig. 7. Grating protected with a hard cover plate.

6.1.1 Factors affecting reading data

Turning now to those environmental factors which may affect the ability to read the mark, we must again consider the nature of the ID and the resulting identification process. Diffraction moire interferometry was developed to provide an elegant method of detecting and measuring deformation in material objects. Thus, IDs based on this method will be sensitive to environmental effects which induce deformation or displacement in the ID. Among these effects are thermal cycling, mechanical deformation of the substrate material due to shifting loads, shrinkage or expansion of the adhesives (or of the substrate or protective coating), vibration, and extreme thermal gradients in the air through which the readout laser beams are propagating.

Generally speaking, it is our opinion, borne out by experience and experiment, that effects that produce deformation that is essentially uniform over the surface of the grating (say 50 mm in diameter) will not affect the data. This implies that the temperature can vary between readings of the mark but cannot vary greatly across the grating. Similarly, mechanical deformation due to shifting loads or varying pressure

Theoretically, if supplied with a phase map of the desired beam, one can compute the required diffractive pattern and use the hologram generating device to produce the pattern. Normally, these patterns do not closely resemble the patterns used in diffraction moire, so even though the raw data appear similar, other more subtle effects may differ markedly. Among these effects are diffraction efficiency and the exact way light is distributed among the various diffraction orders coming from the grating. This efficiency and distribution are strongly influenced by the exact details of the grating groove profile. Diffraction moire normally only concerns itself with the ± 1 orders, but if the other orders are monitored, differences may be evident between the original and synthetic gratings. This technology is being evaluated, and we will analyze such replicas as soon as we have adequate methods for performing the comparison. Such comparisons should be possible as soon as the technique and software to compensate for misalignment are complete and tested.

7. ACKNOWLEDGMENTS

We wish to thank Francis Tsang of EG&G Idaho for his support and guidance. We also thank all those working on this difficult problem for any of their concepts we have knowingly or inadvertently appropriated. Work sponsored by the U.S. Department of Energy under DOE Contract No. DE-AC07-76ID01570.

8. REFERENCES

1. D. Post, "Moire Interferometry," Handbook of Experimental Mechanics, A. S. Kobayashi, (ed.), Prentice Hall, Englewood Cliffs, NJ, 1987.
2. V. A. Deason and M. Ward, "Compact Portable Diffraction Moire Interferometer," SPIE Proceedings, Vol. 1162, 1989.

DISCLAIMER

This report was prepared as an account of work sponsored by an agency of the United States Government. Neither the United States Government nor any agency thereof, nor any of their employees, makes any warranty, express or implied, or assumes any legal liability or responsibility for the accuracy, completeness, or usefulness of any information, apparatus, product, or process disclosed, or represents that its use would not infringe privately owned rights. Reference herein to any specific commercial product, process, or service by trade name, trademark, manufacturer, or otherwise does not necessarily constitute or imply its endorsement, recommendation, or favoring by the United States Government or any agency thereof. The views and opinions of authors expressed herein do not necessarily state or reflect those of the United States Government or any agency thereof.