350
10/2/84
JB

1

DR-0432-4

DOE/METC/82-28
(DE84009262)

FOSSIL ENERGY

# DESIGN OF THE GRIMETHORPE EXPERIMENTAL FACILITY AS OF MARCH 1981: A TECHNICAL REPORT

By
NCB (IEA Grimethorpe) LTD.

Work Performed Under International Agreement No.: ET10393

For
U. S. Department of Energy
Office of Fossil Energy
Morgantown Energy Technology Center
Morgantown, West Virginia

By
NCB (IEA Grimethorpe) LTD.
Grimethorpe,
Barnsley,
South Yorkshire, England

TECHNICAL INFORMATION CENTER
OFFICE OF SCIENTIFIC AND TECHNICAL INFORMATION
UNITED STATES DEPARTMENT OF ENERGY

## DISCLAIMER

This report was prepared as an account of work sponsored by an agency of the United States Government. Neither the United States Government nor any agency Thereof, nor any of their employees, makes any warranty, express or implied, or assumes any legal liability or responsibility for the accuracy, completeness, or usefulness of any information, apparatus, product, or process disclosed, or represents that its use would not infringe privately owned rights. Reference herein to any specific commercial product, process, or service by trade name, trademark, manufacturer, or otherwise does not necessarily constitute or imply its endorsement, recommendation, or favoring by the United States Government or any agency thereof. The views and opinions of authors expressed herein do not necessarily state or reflect those of the United States Government or any agency thereof.

**DISCLAIMER**

**Portions of this document may be illegible in electronic image products. Images are produced from the best available original document.**

## DISCLAIMER

This report was prepared as an account of work sponsored by an agency of the United States Government. Neither the United States Government nor any agency thereof, nor any of their employees, makes any warranty, express or implied, or assumes any legal liability or responsibility for the accuracy, completeness, or usefulness of any information, apparatus, product, or process disclosed, or represents that its use would not infringe privately owned rights. Reference herein to any specific commercial product, process, or service by trade name, trademark, manufacturer, or otherwise does not necessarily constitute or imply its endorsement, recommendation, or favoring by the United States Government or any agency thereof. The views and opinions of authors expressed herein do not necessarily state or reflect those of the United States Government or any agency thereof.

This report has been reproduced directly from the best available copy.

Available from the National Technical Information Service, U. S. Department of Commerce, Springfield, Virginia 22161.

Price: Printed Copy A07
Microfiche A01

Codes are used for pricing all publications. The code is determined by the number of pages in the publication. Information pertaining to the pricing codes can be found in the current issues of the following publications, which are generally available in most libraries: *Energy Research Abstracts (ERA); Government Reports Announcements* and Index (*GRA* and I); *Scientific and Technical Abstract Reports (STAR);* and publication NTIS-PR-360 available from NTIS at the above address.

DOE/METC/82-28
(DE84009262)
Distribution Category UC-90e

# DESIGN OF THE GRIMETHORPE EXPERIMENTAL FACILITY AS OF MARCH 1981: A TECHNICAL REPORT

By
NCB (IEA Grimethorpe) LTD.

Work Performed Under International Agreement No.: ET10393

For
U. S. Department of Energy
Office of Fossil Energy
Morgantown Energy Technology Center
P. O. Box 880
Morgantown, West Virginia 26505

By
NCB (IEA Grimethorpe) LTD.
Grimethorpe,
Barnsley,
South Yorkshire, England S72 7AB

MASTER

THIS PAGE

WAS INTENTIONALLY

LEFT BLANK

## ACKNOWLEDGEMENTS

The Grimethorpe Experimental Facility is intended to carry out research into pressurised fluidised bed combustion on behalf of the three sponsors.

The Governments of the Federal Republic of Germany, the United States of America and the United Kingdom, under the auspices of the International Energy Agency, have agreed to share equally between them the costs of building and operating the Facility.

The Project is funded by the Sponsoring Countries through the following agencies:

| | |
|---|---|
| FRG | Kernforschungsanlage Julich GmbH |
| USA | Department of Energy |
| UK | Department of Energy |

The Facility has been built on a site adjoining a power station at the National Coal Board's Grimethorpe Colliery, South Yorkshire, England.

THIS PAGE

WAS INTENTIONALLY

LEFT BLANK

# TABLE OF CONTENTS


| | | | Page No. |
|---|---|---|---|
| I. | | SUMMARY | |
| | 1. | INTRODUCTION | 1. |
| | 2. | OBJECTIVES AND SCOPE OF THE PROJECT | 3. |
| | 3. | GENERAL DESCRIPTION OF THE FACILITY | 6. |
| II. | | TECHNICAL DESCRIPTION OF THE PLANT | |
| | 4. | COMBUSTOR AND EXHAUST GAS HEAT EXCHANGER | 10. |
| | 4.1 | General Description | 10. |
| | 4.2 | Combustor Pressure Vessel | 10. |
| | 4.2.1 | General Description | 10. |
| | 4.2.2. | Penetrations | 10. |
| | 4.3 | Furnace | 14. |
| | 4.3.1 | General Description | 14. |
| | 4.3.2 | Penetrations | 14. |
| | 4.4 | Distributor Plate | 17. |
| | 4.4.1 | General Description | 17. |
| | 4.5 | Steam Water Circuit | 19. |
| | 4.5.1 | General | 19. |
| | 4.5.2 | A Process Description of the Steam-Water Circuit | 21. |
| | 4.5.2.1 | General Description | 21. |
| | 4.5.2.2 | The Design of the Steam-Water Circuit | 21. |
| | 4.5.2.3 | The Steam-Water Circuit Start-up System | 23. |
| | 4.5.2.4 | Condensate Recovery System | 25. |
| | 4.5.3 | In-Bed Tub Bank | 26. |
| | 4.5.4 | Freeboard Cooler | 26. |
| | 4.5.5 | Heat Exchanger | 28. |
| | 4.5.5.1 | General Description | 28. |

TABLE OF CONTENTS


| | | Page No. |
|---|---|---|
| 4.5.5.2 | Heat Exchanger Pressure Vessel | 28. |
| 4.5.5.3 | Heat Exchanger Water-walled Enclosure | 29. |
| 4.5.5.4 | Heat Exchanger Tube Banks | 32. |
| 5. | EXHAUST GAS CLEANING EQUIPMENT | 34. |
| 5.1 | General Description | 34. |
| 5.2 | Primary and Secondary Cyclones | 39. |
| 5.2.1. | Cyclone Insulating and Refractory Lining | 39. |
| 5.3 | High Temperature High Pressure Gas Ducting | 40. |
| 5.4 | Ash Quench and Depressurisation Systems | 46. |
| 5.4.3 | Primary Cyclonet Fines Quench and Blowdown | 49. |
| 5.4.4 | Secondary Fines Quench and Blowdown | 51. |
| 6. | Turbo Compressor | 52. |
| 6.1 | General Description | 52. |
| 6.2 | The Air Compressor | 52. |
| 6.3 | Turbine | 52. |
| 7. | Fuel/Bed Material Feed System | 58. |
| 7.1 | General Description | 58. |
| 7.2 | Storage Injector | 58. |
| 7.3 | Primary Injector | 58. |
| 7.4 | Sample Receiver | 60. |
| 7.5 | Nitrogen Pressurisation Supply | 60. |
| 7.6 | Transport Air Supply | 60. |
| 7.7 | Bed Material Feeder | 60. |
| 7.8 | Operation of the Fuel Injection System | 60. |
| 8. | Instrumentation and Control | 62. |
| 8.1 | Introduction | 62. |

TABLE OF CONTENTS


| | | Page No. |
|---|---|---|
| 8.2 | General Description of the Process Control Instrumentation | 62. |
| 8.2.1 | Process Air Mass Flow | 62. |
| 8.2.2 | Process Pressures | 63. |
| 8.2.3 | Process Temperature | 63. |
| 8.2.4 | Flue Gas Composition | 64. |
| 8.2.5 | Steam/Water Circuit | 66. |
| 8.3 | Computer Control | 66. |
| 8.3.1 | Micro B Micro Processor | 66. |
| 8.3.1.1 | Air Mass Flow Control | 66. |
| 8.3.1.2 | System Pressure Control | 69. |
| 8.3.1.3 | Bed Temperature Control | 69. |
| 8.3.1.4 | Bed Level Control | 69. |
| 8.3.2 | Data Acquisition System | 70. |
| 8.3.2.1 | Introduction | 70. |
| 8.3.2.2 | General Description | 70. |
| 8.3.2.3 | DAS Storage | 70. |
| 8.3.2.4 | Output Devices | 71. |
| 8.3.2.5 | DAS Usage During Test Series 1 Operation | 72. |
| 8.3.2.6 | Editing of the Magnetic Tapes | 72. |
| 8.4 | Safety Interlocks System | 73. |
| 8.4.1 | Introduction | 73. |
| 8.4.2 | Main Plant Interlocks | 73. |
| 8.4.2.1 | Actions Initiated by the Main Plant Interlock Trip | 73. |
| 8.4.2.2 | Interlocks which initiate the Main Plant Interlock Trip | 74. |

TABLE OF CONTENTS


| | | Page No. |
|---|---|---|
| 8.4.3 | Local Plant Interlocks | 75. |
| 8.4.3.1 | Steam Quality Interlocks | 75. |
| 8.4.3.2 | Low Bed Temperature Interlock | 75. |
| 8.4.3.3 | Combustor Waterwall Interlock | 75. |
| 8.5 | Central Control Room | 76. |
| 9. | FUEL PREPARATION | 79. |
| 9.1 | General Description | 82. |
| 10. | ASH HANDLING AND DEWATERING PLANT | 82. |
| 10.1 | General Description | 82. |
| 10.2 | Detailed Plant Description | 82. |
| 10.2.1 | Degritter and Screw Conveyor | 82. |
| 10.2.2 | Balance Tank and Slurry Transfer Pumps | 85. |
| 10.2.3 | Polyprep Unit and Dosing Pumps | 86. |
| 10.2.4 | Thickener | 88. |
| 10.2.5 | Clearwell and Clearwell Transfer Pumps | 91. |
| 10.2.6 | Cooling Tower and Pond | 92. |
| 10.2.7 | High Pressure and Low Pressure Pumps | 92. |
| 10.2.8 | Excess Fuel Prep. Liquor Pumps | 93. |
| 10.2.9 | Underflow Discharge Pumps | 93. |
| 10.2.10 | Rotary Drum Vacuum Filter and Trough Conveyor | 93. |
| 10.2.11 | Recovered Water Tank and Pumps | 95. |
| 10.2.12 | Filtrate Receiver and Pump | 95. |
| 10.2.13 | Vacuum Pump and Separator | 96. |
| 10.3.14 | Washwater Tank and Pumps | 96. |
| 10.2.15 | Inhibited Hydrochloric Acid System | 97. |

TABLE OF CONTENTS


| | | Page No. |
|---|---|---|
| 11. | ELECTRICAL SERVICES | 98. |
| 11.1 | Systems Description | 98. |
| 12. | PIPEWORK AND SERVICES | 100. |
| 12.1 | General Description | 100. |
| 12.2 | High Pressure Steam System | 100. |
| 12.3 | Condensate System | 102. |
| 12.4 | Boiler Feed-Water System | 105. |
| 12.5 | Start-up System | 106. |
| 12.6 | Clean Drain System | 108. |
| 12.7 | Low Pressure Steam and Condensate System | 109. |
| 12.8 | Cooling Water System | 109. |
| 12.9 | Process Air Supply to Combustor | 110. |
| 12.9.1 | General | 110. |
| 12.9.2 | Process Air for Compressor Furnace System | 111. |
| 12.9.3 | Process Air for Ash Extraction Systems | 112. |
| 12.10 | Instrument Air System | 112. |
| 12.11 | Burner Air System | 116. |
| 12.12 | Miscellaneous Pipework | 117. |
| 12.13 | Transport Air Booster Compressor and Drier | 119. |
| 12.13.1 | Booster Compressor | 119. |
| 12.13.2 | Transport Air Drier | 120. |
| 13. | CONDENSATE POLISHING PLANT | 123. |
| 13.1 | General Description | 123. |
| 13.2 | Polishing Plant | 123. |
| 13.3 | Instrumentation and Pipework | 125. |

TABLE OF CONTENTS


| | | Page No. |
|---|---|---|
| 14. | CIVIL WORKS | 126. |
| 14.1 | General Description | 126. |
| 14.2 | Main Plant Building | 126. |
| 14.3 | The Control Building | 126. |
| 15. | CHIMNEY | 128. |
| 15.1 | General Description | 128. |
| 16 | CRANE | 129. |
| 16.1 | General Description | 129. |
| 16.2 | Crane Specifications | 129. |


APPENDICES


| | | |
|---|---|---|
| I | STANDARDS FOR THE CONSTRUCTION OF THE GRIMETHORPE EXPERIMENTAL FACILITY | 131 |

## LIST OF FIGURES


| | | Page No. |
|---|---|---|
| Figure 1. | Plant Layout Elevations | 7. |
| Figure 2. | Gas/Solids Flow Sheet | 8. |
| Figure 3. | Combustor/Pressure Vessel Elevation | 11. |
| Figure 4. | Combustor Furnace Distributor Plate Design | 16. |
| Figure 5. | Steam/Water Circuit, Tube Bank A. | 22. |
| Figure 6. | Heat and Mass Balance, Tube Bank A Conditions. | 24. |
| Figure 7. | Condensate Recovery System Flow Sheet. | 27. |
| Figure 8. | Heat Exchanger/Pressure Shell Elevation. | 30. |
| Figure 9. | Exhause Gas System High Efficiency Cyclone. | 35. |
| Figure 10. | Cyclone Insulating and Refractory Linings. | 36. |
| Figure 11. | Primary Cyclone Disengagement Vessel. | 37. |
| Figure 12. | Size Spectrum of Dust across Primary Cyclones. | 38. |
| Figure 13. | Elevation of High Temperature/Heat Pressure Ductwork. | 41. |
| Figure 14. | Plan of High Temperature/High Pressure Ductwork. | 42. |
| Figure 15. | Internal Dimensions of High Temperature/High Pressure Ductwork. | 43. |
| Figure 16. | Ash Quench and Depressurization Systems. | 47. |
| Figure 17. | Approximate Performance of Reavell Air Compressor IGV = $0^{o}$ | 54. |
| Figure 18. | Approximate Performance of Reavell Air Compressor IGV = $60^{o}$ | 55. |
| Figure 19. | Approximate Power to Reavell Air Compressor IGV = $0^{o}$ | 56. |
| Figure 20. | Approximate Discharge Temperature of Reavell Air Compressor IGV = $60^{o}$. | 57. |
| Figure 21. | Petrocarb Fuel Feed System | 59. |
| Figure 22. | Instrumentation & Control Logic Diagram | 67. |
| Figure 23. | Central Control Room Layout. | 77. |

LIST OF FIGURES CONT/...


| | | Page No. |
|---|---|---|
| Figure 24. | Schematic of Fuel Preparation Plant. | 80. |
| Figure 25. | Design Size Spectra from Fuel Preparation Plant | 81. |
| Figure 26. | Ash Handling and Dewatering Plant. | 83. |
| Figure 27. | Poly Prep Dosing Unit. | 87. |
| Figure 28. | Crossection of Thickener. | 89. |
| Figure 29. | Plan of Thickener. | 90. |
| Figure 30. | Instrument Air Distribution System | 114. |

## LIST OF TABLES


| | | Page No. |
|---|---|---|
| Table 1 | Outline of Operating Parameters | 5. |
| Table 2. | Combustor Pressure Vessel Penetrations | 12. |
| Table 3. | Probe Hole Distribution in the Combustor Furnace Water Holes | 15. |
| Table 4. | Design Basis for Tube Banks A and B | 20. |
| Table 5. | Tube Bank Details of Steam Water Circuit | 31. |
| Table 6. | Location of Thermocouples Measuring Bed Temperatures within Tube Bank 'A' | 65. |
| Table 7. | Maximum Ash Loadings from Combustor and Cyclones | 84. |
| Table 8. | Ash Quench Water Treatment Specification | 84. |
| Table 9. | A. Required Duty of Condensate Polishing Ion-Exchange Bed. | 124. |
| | B. Water Quality required at Outlet from De-aerator Storage Tank. | 124. |
| Table 10. | Specification of Demag Crane | 130. |

# 1. INTRODUCTION

The Experimental Pressurised Fluidised Bed Combustor, which has been built as an extension to the National Coal Board Power Station, which is adjacent to Grimethorpe Colliery, Yorkshire, England, is described in this report.

The Governments of the United Kingdom, the United States of America and the Federal Republic of Germany, under the auspices of the International Energy Agency, have agreed to share equally between them the costs of building and operating the plant, hereafter referred to as the Grimethorpe Experimental Facility. The Implementing Agreement, setting out the rights and responsibilities of the sponsoring Governments and laying down the rules by which the project would be conducted, was signed on 20th November, 1975 in Paris.

Control of the project was vested in an Executive Committee consisting of one representative of each Government with all decisions requiring unanimity. The actual operation of the project was vested in an Operating Agent, NCB (IEA Services) Ltd., a wholly owned subsidiary of the National Coal Board. In 1979, the function of Operating Agent was transferred to NCB (IEA Grimethorpe) Ltd., again a wholly owned subsidiary of the National Coal Board. The Implementing Agreement envisages a seven year project to be executed in four stages:

1. Procurement of Design Study with accompanying tender documents.
2. Tendering for construction of the Plant; study of appraisal of tenders.
3. Construction and acceptance of the Plant.
4. Operation of the Plant.

Stages 1 to 3 was scheduled to take three years commencing in early 1976, with a four year research programme thereafter.

The Operating Agent, with the agreement of the Executive Committee, chose to accomplish Stage 1 by engaging design consultants who prepared tender documents which specified in broad terms the requirements for the Experimental Facility and dictated the standards to which it was to be built. Responsibility for the detailed design, however, was in all cases placed upon the successful tenderer. The tender documents for main plant items were approved by technical representatives of the Executive Committee before issue.

The project is now towards the end of Stage 3. Construction has been completed and commissioning is in progress to prepare the plant for the start of the operational phase in Autumn 1981. Because of the confidentiality of much of the design information, for the purposes of this report technical descriptions have been confined to that of a general appraisal.

Metric (S.I) units have been used throughout the tender, design and manufacturing stages, accordingly all working drawings are so dimensioned. A conversion to imperial units has been made throughout the text but the results are approximate only.

## 2. THE OBJECTIVE AND SCOPE OF THIS PROJECT

Article 1 of the Implementing Agreement, entitled 'objectives' makes reference to PADB Note No. 75/20 of the Working Party on Coal Technology of the Sub Group on Energy Research and Development of the International Energy Agency. The Sponsors, having agreed to proceed with Stage 1 of the Project, convened a technical meeting, held at Leatherhead on 13th and 14th January, 1976, where the technical requirements for the Facility were discussed and agreed between representatives of all three sponsoring countries.

The broad objectives of the Project were agreed as follows:

1. To build a pressurised Fluidised-Bed Combustion Experimental Facility and to study combustion, heat transfer, gas clean up, corrosion and energy recovery in such a system.

2. To carry out tests over a wide range of operating conditions and to make measurements in greater detail than would be either economic or possible in a unit integrated with a gas turbine where pressure ratio, gas flow rate and combustion gas temperature are fixed within relatively narrow limits.

3. To provide data for analytical modelling of design data for larger commercial plant by empirical data extrapolation.

The Experimental Facility was to provide the means to conduct research into a number of aspects of large commercial plant, and in the immediate future, the following studies are sought:

i) Combustor performance using high ash coal.

ii) Effects of dolomite sorbent additives on sulphur retention.

iii) Study of heat transfer, heat-transfer elements, materials, geometry and efficiency.

iv) Gas clean up and dust removal prior to atmospheric discharge.

v) Gas borne particulate erosion effects upon turbine materials.

vi) Studies on exhaust gas driven turbines.

The range of conditions over which the Facility is required to operate is shown in Table 1 and it has been inherent in the design exercise that the Facility be flexible enough to cover this range.

The Facility must comply with the provisions of the United Kingdom Health and Safety at Work Act which means that all aspects of the design must comply with the relevant British Standard or its International equivalent. It is these standards which have ultimately determined the materials and method of construction of the plant. The inter-relationships of the various International standards is discussed in Appendix I.

In the immediate area of the combustor, there is a possibility of propane and/or coal dust escaping to the general atmosphere. Therefore, this area has been declared a hazardous area to Division II as defined by U.K. Code of Practice 1003 Part 1 1964 and British Standard 4683 Part 3 1972.

Table 1

| Item | Units | First Build Tube Bank A* | Datum | Range |
|---|---|---|---|---|
| 1. Air Mass Flow | kg/s | 31 | 31 | 9 - 31 |
| | lb/s | 68 | 68 | 20 - 68 |
| 2. Combustor Pressure | bar | 10 | 10 | 6 - 12** |
| | psia | 145 | 145 | 87 - 175 |
| 3. Coal heat input | MW | 75 | 87 | 10 - 90 |
| | $10^6$/Btu/h | 255 | 297 | 34 - 307 |
| 4. Temperatures: Bed | °C | 850 | 850 | 800 - 950*** |
| | °F | 1560 | 1560 | 1470 - 1740 |
| Inlet Secondary Cyclone | °C | 850 | 850 | Up to 900 |
| | °F | 1560 | 1560 | Up to 1650 |
| 5. Excess Air | % | 27 | 10 | 10 - 100 |
| 6. Fluidising Velocity | m/s | 2.5 | 2.5 | 0.75 at 9 bar<br>3.7 at 6.8 bar |
| | ft/s | 8.2 | 8.2 | 2.5 at 9 bar<br>12 at 6.8 bar |
| 7. Coal as Fired:Top Size | mm | 6.4 | 6.4 | 1.6 - 6.4 |
| | inch | 1/4 | 1/4 | 1/16 - 1/4 |
| Moisture | | 3.9 | Air Dried | |
| Ash | % | 15.1 | 15.1 | 10 - 40 |
| Sulphur | % | 1.6 | 1.6 | 1 - 5 |
| Feed Rate | kg/h | 9960 | 11580 | Up to 17,000 |
| | lb/h | 21950 | 25540 | Up to 37,500 |
| 8. Steam Conditions: | | | | |
| Pressure | bar | 30.3 | 30.3 | |
| | psia | 440 | 440 | |
| Temperature | °C | 440 | 440 | |
| | °F | 824 | 824 | |
| 9. Emission of $SO_2$ | kg/GJ | 1.17 | 0.52 | 0.52 max. |
| | lb/$10^6$Btu | 2.7 | 1.2 | 1.2 max. |
| 10. Dolomite Addition: | | | | |
| Top Size | mm | - | 6.4 | 1.6 - 6.4 |
| | inch | - | 1/4 | 1/16- 1/4 |
| Feed Rate | kg/h | 0 | 1000 | Up to 13,000 |
| | lb/h | 0 | 2200 | Up to 23,000 |

* Ignores the effect of using Dolomite as a Sorbent.
** Pressure shell shall be designed for 15 bar.
*** Combustor shall be designed for operation at 1100°C

Table 1
Outline of Operating Parameters

NCB (IEA GRIMETHORPE) LTD.
Pressurised Fluidised Bed
Combustion Project
Grimethorpe Experimental Facilit

## 3. GENERAL DESCRIPTION OF THE FACILITY

3.1 The heart of the facility (see figures 1 and 2) is a water cooled fluidised bed combustor installed within a pressure shell. Combustion air enters the top of the pressure shell and flows down its length before entering the combustor, thus temperature and pressure are separately contained. Fuel and sorbent, which can be prepared and mixed to specific size spectra and ratios over a wide range, are injected into the combustor at controlled rates via a lock-hopper and fluidised-bed feeder. Provision is also made for the feed of fresh bed material and the disposal of hot ash at controlled rates. Transport air for the fuel and bed material feeders is obtained via a booster compressor from the outlet of the main compressor; the booster being driven by an expander installed across the low pressure stage of the main compressor.

3.2 A steam driven turbo-compressor fulfills the pressurising and fluidising air duty, powered from either the power station steam supply during start up or by the Facility's own steam generation during operation. During many test conditions steam surplus to the turbine requirements will be produced and exported to the power station steam range.

3.3 From the combustor, high temperature ducting directs the off-gas into a dust extraction unit served by four primary and four secondary cyclones. In order to maintain an even distribution of the dust and hence maximise cyclone efficiency each primary cyclone is separately connected to one of the secondary cyclones. Ash collected by the cyclones is discharged via a water quench and pressure let down system. Solids discharge from the cyclones is assisted by a continuous 1% blow down of flue gas.

3.4 After the secondary cyclones and before pressure let down a heat exchanger is installed to reduce the flue gas temperature from that of test to around 300°C (572°F). The construction of the heat exchanger is similar to that of the combustor/pressure shell and the heat-transfer circuits of both are combined in a single once-through steam-water circuit.

3.5 In order to control pressure over the range of flow rates envisaged two valves will be required, the smaller one covering the lower third of the flow range. Both valves are bypassed by a third control valve which can be set to open at any pressure in the range 6 - 12 bar (87-174 psia) and can thus relieve a pressure surge at any test condition. In addition all three valves are bypassed by a normal safety valve permanently set at 10% above the system maximum operating pressure, i.e., 13.2 bar. Both pressure vessels have similar safety valves.

3.6 After depressurisation flue gas is discharged via a silencer to a free standing concrete chimney 92m (302ft) tall. This chimney is essentially the same as that of the existing power station.

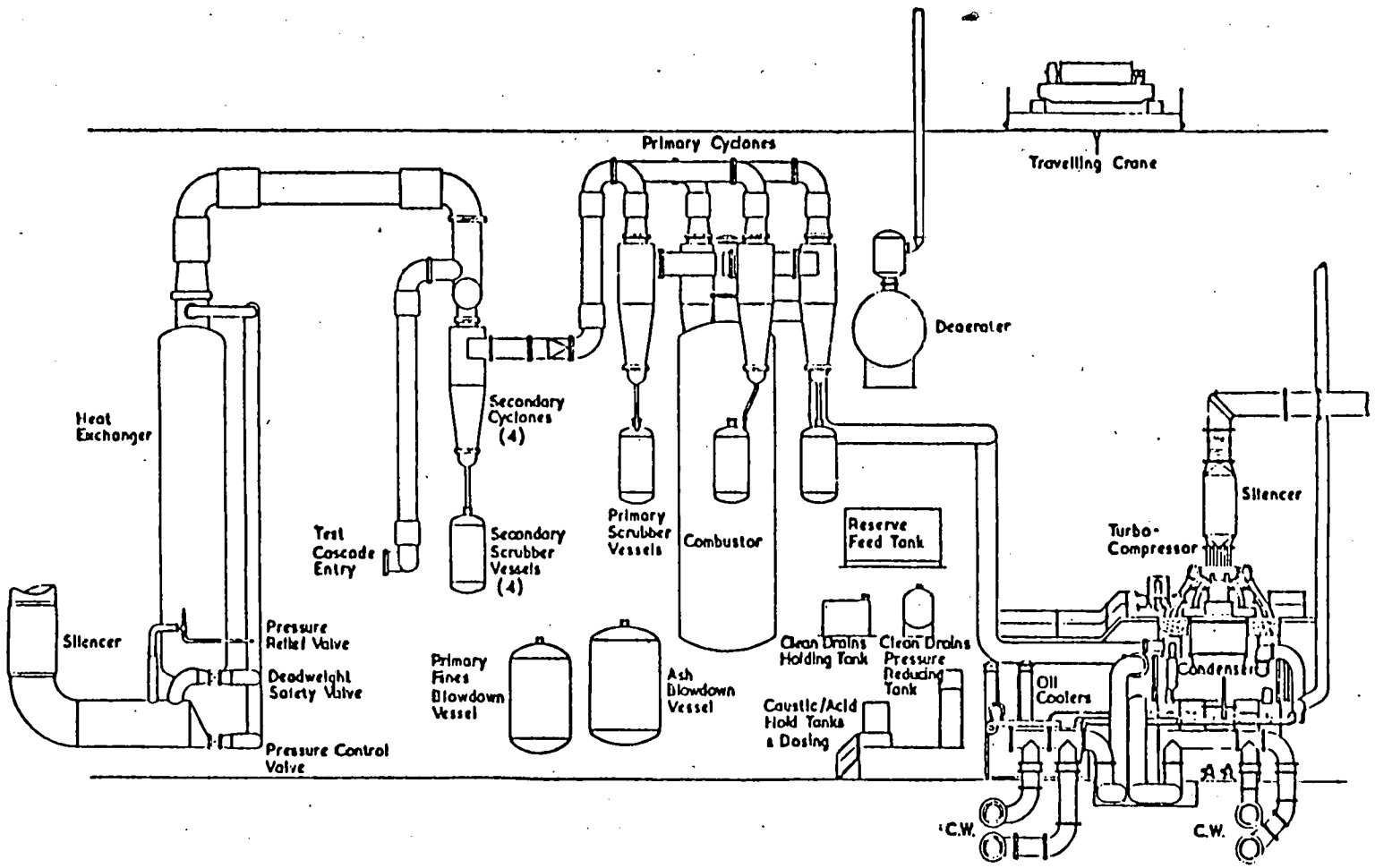


Figure 1
Plant Layout Elevation

NCB (IEA Grimethorpe) Ltd.
Pressurised Fluidised Bed
Combustion Project
Grimethorpe Experimental
Facility

Figure 1

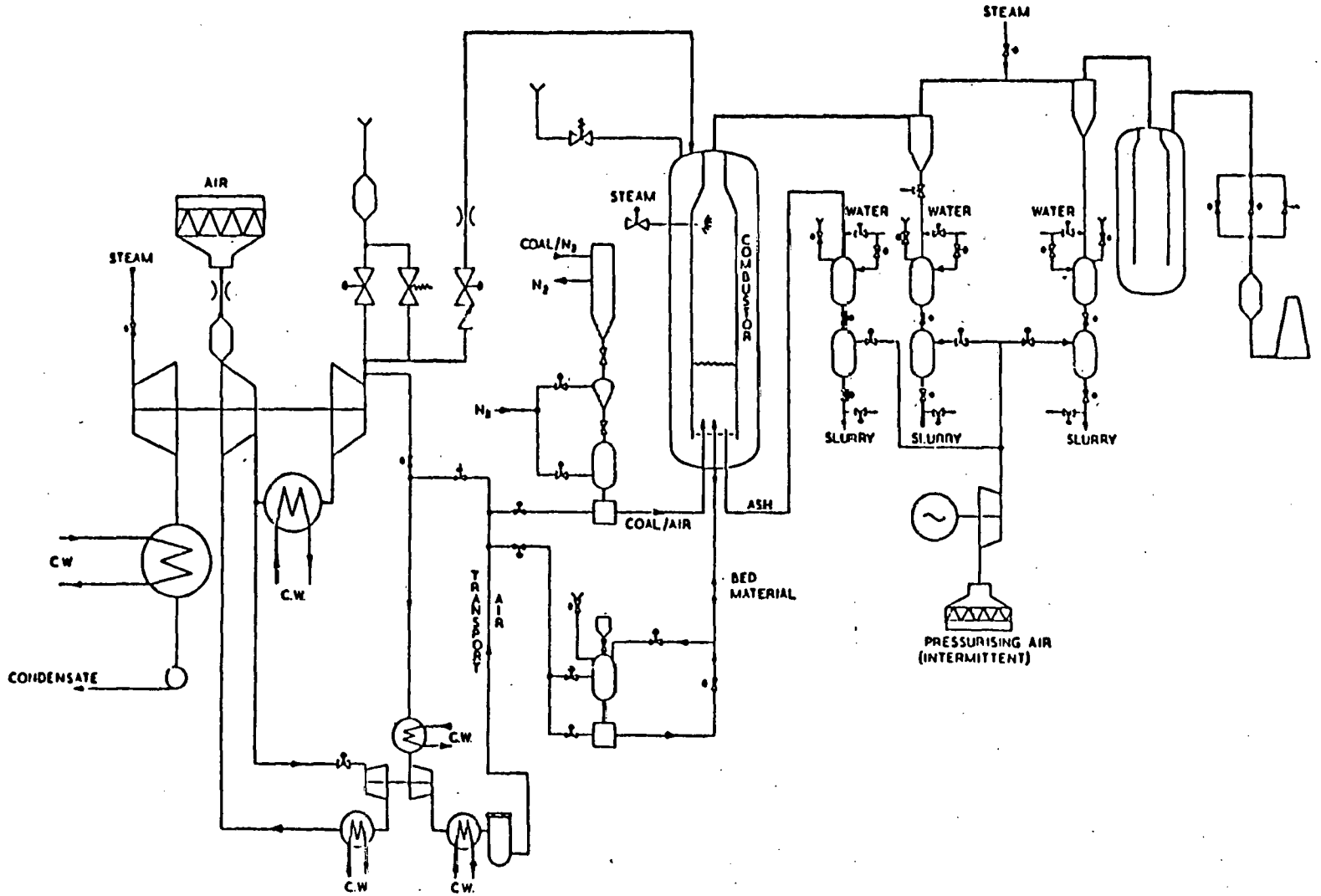


Figure 2
Gas/Solids Flow Sheet

NCB (IEA Grimethorpe) Ltd.
Pressurised Fluidised Bed
Combustion Project
Grimethorpe Experimental
Facility

Figure 2

3.7 Between the secondary cyclones and the heat exchanger provision is made to tap a proportion of the flue gas to pass over test cascades of gas-turbine blades. A cascade system incorporating a tertiary gas clean-up stage will be installed in the Autumn of 1981. The flow from the cascade will be passed through an auxiliary heat exchanger and returned to the main gas stream through its own control valve system.

3.8 A comprehensive computerised control system is installed capable of automatic control of all phases of operation from start-up through test operations to controlled shut down. The system is integrated with various interlocks and alarms to ensure hazard free operation. The basic philosophy is that in the worst emergency, assumed to be total electric failure, the turbo-compressor will continue in operation and the control system remain operable for 15 minutes to allow a controlled depressurisation and temperature reduction. Flow to the steam-water circuit will be maintained by a separately powered emergency feed pump.

# 4. COMBUSTOR AND EXHAUST GAS HEAT EXCHANGER

Contractor - Vereinigte Kesselwerke A.G. (VKW)
Contract Reference No. - YCE. 24/7828
Date Let - 7th February, 1977

## 4.1 General Description

The combustor contract provides for the detail design and construction of the combustor and exhaust gas heat exchanger. The combustor (see figure 3) consists of five principle elements, i) pressure shell, ii) furnace, iii) distributor plate, iv) steam water circuit. Detailed technical descriptions are provided under these headings. The combustor has a datum capacity of $75MW_{th}$ ($2.55 \times 10^8$ Btu/hr) (see table 1) and can operate within the pressure range 6 - 12 bar, with the off gas temperature in the range 800 - 950°C (1470 - 1740°F) with a maximum design temperature within the furnace of 1100°C (2012°F). The combustor/pressure shell weighs some 100 tonnes erected. The exhaust gas heat exchanger consists of a pressure shell containing a number of heat exchanger coils and is described in section 4.5.6.

## 4.2 Combustor Pressure Vessel

### 4.2.1 General Description

The pressure vessel has been designed for a pressure of 15 bar absolute (217.5 psia), and has a length of 14,000mm (45ft 9ins) overall and an outside diameter of 4,000mm (13ft 2ins) excluding the flange. (see figure 3). It consists of three elements; i) the barrel, 10760mm (35ft 4ins) in overall length, ii) the top dome welded directly to the barrel and iii) the bottom dome. It is constructed from 17Mn4 steel having a uniform wall thickness of 30mm (1.2 ins).

In order to facilitate the detection of hot spots, the specification stipulated no external insulation. Therefore, the shell has an internal insulating layer designed to maintain an outside wall temperature of 55°C (131°F) when the combustion air entering the shell is at 300°C (572°F). As an additional protection against overheating, 14 thermocouples are welded to the inner surface of the shell at various strategic locations.

The pressure shell has numerous penetrations which will be described according to purpose.

### 4.2.2 Penetrations

The penetrations are outlined in table 2, and described below. All distances are from the bottom flange face to the centre line of the penetrations and all penetration measurements are in the internal diameter. Thirteen 500mm (19.7ins) diameter circular manways are provided at the following distances; two at 2380mm (7ft 10ins), two at 3325mm (10ft 11ins), two at

Figure 3

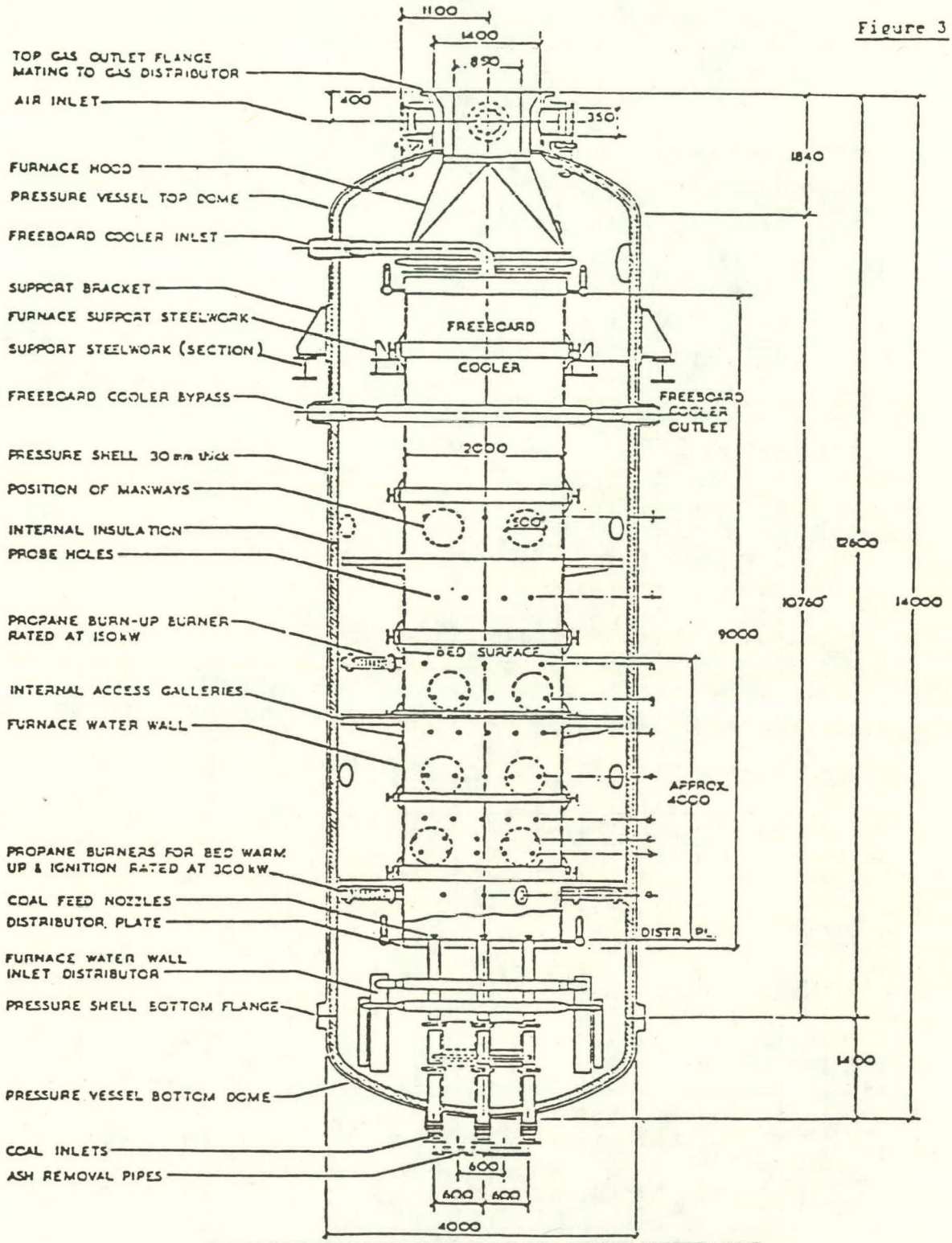


| a | b | c | d | e | f | g | h | i | j |
|---|---|---|---|---|---|---|---|---|---|
| 505 | 1095 | 1235 | 1680 | 2255 | 2850 | 3270 | 3770 | 4880 | 6000 |

All dimensions in mm

Figure 3
Combustor/Pressure Vessel Elevation

NCB (IEA Grimethorpe) Ltd.
Pressurised Fluidised Bed Combustion Project
Grimethorpe Experimental Facility

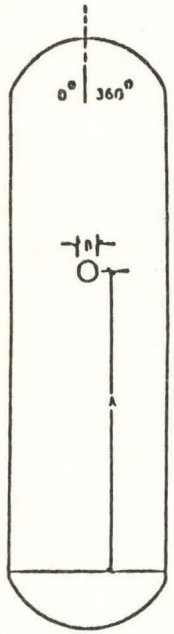


Combustor datum elevation see figure 3

**Shell Penetrations**

| A mm | Ø B mm | No. of | Radial Pos. c.f. Datum Elevation | Purpose |
|---|---|---|---|---|
| 600 | 33.7 | 10 | 25° + 4 x 6° 30' | Tube Bank B Inlet |
| 600 | 219.1 | 1 | 180° | Tube Bank A + B Outlet |
| 600 | 114.3 | 1 | 0° | Tube Bank A Inlet |
| 1370 | 133 | 1 | 0° | Wall Tube Inlet |
| 1690 | 168 | 4 | 90° Array. Start 26°33'54" | Propane Burners |
| 2380 | 500 | 2 | 14°30' and 199° | Manway |
| 3325 | 500 | 2 | 163°30' and 345° | Manway |
| 3325 | 300 | 4 | 90° Radial. Start at 60° | Instrument |
| 4495 | 500 | 2 | 19° and 192° 30' | Manway |
| 4810 | 168 | 1 | 206° 33' 54" | Burner |
| 5570 | 500 | 2 | 105° and 205° | Manway |
| 5690 | 100* | 1 | 0° and 180° | Steam Injection |
| 6720 | 500 | 4 | 90° Radial Start at 15° | Manway |
| 6720 | 300* | 2 | 60° and 240° | Instrument Line Ports |
| 8233 | 244.5 | 2 | 90° and 270° | Freeboard Cooler Outlet |
| 10210 | 133 | 1 | 180° | Wall Tube Outlet |
| 10300 | 500 | 1 | 75° | Manway |
| 10460 | 244.5 | 1 | 270° | Freeboard Cooler Inlet |

**Bottom Dome Penetrations**

| Dist./Angle From Centre | No. of | Ø Dia. mm | Radial Arrangement | Purpose |
|---|---|---|---|---|
| 25° | 2 | 500 | 0° and 180° | Manways |
| 600 x 600mm grid | 9 | 100* | Centralised to centre | Coal/Dolomite Feeds |
| 424 | 2 | 400* | 45° and 225° | Ash Removal |
| 424 | 1 | 33.7 | 135° | Drain |
| 424 | 1 | 100* | 315° | Bed Filling |

**Top Dome Penetrations**

| | | | | |
|---|---|---|---|---|
| 110mm Port Flange Face to Shell/Dome Weld. | 2 | 150* | 90° and 180° | Safety Valves and Crane Access |

* Nominal bores

Table 2
Combustor Pressure Vessel Penetrations

NCB (IEA Grimethorpe) Ltd.
Fluidised Bed Combustion Project
Grimethorpe Experimental Facility

4495mm (14ft 9ins), two at 5570mm (18ft 3ins), four at 6720mm (22ft 1in), and one at 10,300mm (33ft 9ins). Manholes at the 2380mm (7ft 10ins) 3325mm (10ft 11ins) and 4495mm (14ft 9ins) levels are in line with 69mm (2.7ins) penetrations in the furnace walls allowing probes up to 2500mm (8ft 2ins) in length to be inserted across the furnace width. See table 3.

Six 300mm (11.8ins) instrument line ports are provided, four at 3325mm (10ft 11ins) and two at 6720mm (22ft 1in). One tube bank inlet is provided for at 600mm (2ft) of 114.3mm (4.5ins) diameter. There are ten alternative Tube Bank inlets at 600mm (2ft) each of 33.7mm (1.3ins) diameter. The outlets for the tube banks are combined at 600mm (2ft) in a 219mm (8.6ins) diameter penetration.

A single water wall inlet is provided at 1370mm (4ft 6ins) by a 133mm (5.2ins) diameter penetration with a single outlet at 10210mm (33ft 6ins) of similar diameter.

The freeboard cooling coil inlet is provided for at 10460mm (34ft 4ins) by a 244.5mm (9.6ins) penetration; with the outlet at 8233mm (27ft) of similar diameter. A penetration is provided for the cooler bypass at the same level but diametrically opposite.

A single penetration is provided for the emergency steam injection nozzle at 5690mm (18ft 8ins) of 100mm (3.9ins) nominal diameter.

Propane fuel for the start-up burners is provided for by five penetrations, four at 1690mm (5ft 7ins) each of 168mm (6.6ins) diameter, and the fifth at 3325mm (10ft 11ins) of the same diameter. Experience during hot start up has shown that this fifth propane burner is not required and this penetration has been blanked off.

The top dome, directly welded to the pressure shell, contains the connection to the exhaust gas ductwork and the pressurised air inlets. The original specification called for a flange at this point to aid erection and subsequent modification. Detail design work indicated that the usefulness of such a flange was severely limited and it was therefore deleted. Access to the upper part of the furnace is via a manway in the top of the combustor outlet distributor, or the distributor can be removed. The exhaust gas exit is of 1400mm (4ft 7ins) nominal diameter. The combustion air entry is provided by four 300mm (11.8ins) diameter connections arranged radially and symmetrically in the barrel of the exhaust gas outlet. Additionally, two 150mm (5.9ins) diameter vent ports are provided in the top dome, for safety valves during operation and for crane access during reconstruction is required.

Two bottom domes are provided, one of which has two symmetrically arranged manways of 500mm (1ft 8ins) diameter, while the other penetrations conform to those in the distributor plate, described in section 4.4.2. The second dome remains undrilled so that it can be completed in any configuration shown by the experimental programme to be appropriate.

## 4.3 Furnace

### 4.3.1 General Description

The furnace is, as specified, 2000mm x 2000mm (6ft 7ins) in cross section with a vertical depth of 8000mm (26ft 3ins). The furnace is hung from the pressure shell at the 15385mm (50ft 6ins) level and is connected to the exhaust gas outlet by a refractory lined hood containing an expansion bellows to relieve thermal stress. The furnace walls are stiffened at five levels by external girders to counteract the pressure differential across the distributor and the fluidised bed.

The furnace containment is of water-wall construction. The tubes form part of the steam/water circuit and will be described in detail under that heading.

The specification required that there shall be a minimum 900mm depth (3ft 3ins) of empty bed between the top of the distributor and the lowest row of tubes in any tube bank. However, provision has been made for repositioning the distributor plate giving empty bed depths of 600mm and 750mm as required (2ft 5ins, 2ft 10ins). The space between the distributor plate and the bottom of the in-bed tube bank is fundamental to the combustion characteristics as proper lateral distribution of the fuel feed must have occurred before entry into the tube bank. It is also important during start-up. Four propane burners are installed, of 300kw ($10^6$ Btu/h) heat rate each, firing one through each furnace wall into the space between any tube bank and the distributor. These propane burners are for use during start up, for warming the bed prior to commencing coal feed. Thus they are only designed for operation at system pressures up to 6 bar absolute.

### 4.3.2 Penetrations

For the purpose of investigating the characteristics of the fluidised combustion process within the furnace a number relatively large penetrations are provided in the furnace wall for the insertion of specialist probes. Any particular port can be capped off when not in use. These penetrations are summarised in table 3.

If the four combustor walls are designated 1,2,3 and 4 consecutively, then walls 1 and 3 have ten levels of 69mm (2.7ins) bore probe holes designated levels a/ to j/ from bottom to top see table 3. At level a/ which is the level of the in-bed gas burners 2 x 69mm (2 x 2.8ins) bore ports are provided in walls 1 and 3 such that with the burner there are three equi-spaced ports across the wall. Levels b/, d/, e/, f/ and g/ have 5 x 69mm (5 x 2.8ins) ports in each wall directly opposite each other. If probes were inserted at these levels across the width of the furnace they would coincide with gaps left in the Tube Bank A and conform to the triangular pitching of the tube coils.

| Wall | Level | Probe | Probe Hole Centre To Distributor Plate mm | Horizontal Dist. From ℄ mm (Left) (Right) |
|---|---|---|---|---|
| 1 and 3 | a | | 505 | 500 ℄ 500 (burner) |
| 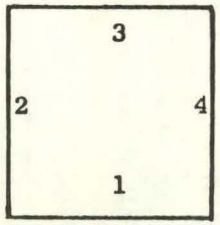 | b* | Bank A | 1095 | 790,440, 80 ℄ 260,630 |
| | c* | Bank B | 1295 | 870,490, 90 ℄ 290,690 |
| | d* | Bank A | 1680 | 740,380, 30 ℄ 310,670 |
| | e* | Bank A | 2265 | 710,360 ℄ 20, 340,710 |
| | f* | Bank A | 2850 | 670,310 ℄ 50, 400,760 |
| | g* | Bank A | 3270 | 620,280 ℄ 80, 430,790 |
| 69mm probe holes | h | | 3770 | 740 ℄ 740 |
| | i | | 4880 | 600,250 ℄ 250,600 |
| | j | | 6000 | 740 ℄ 740 |
| * Probe holes repeated in wall 3. Probes coincide with pitch of tube bank | | | | |
| 2 and 4 | h | | 3740 | (burner) 500 ℄ 500 |
| 60mm probe | i | | 4850 | 750 ℄ 750 |
| holes | j | | 5970 | 500 ℄ 500 |
| NOTE: Distributor plate in the 900mm position from bottom of the in bed tube bank. | | | | |

Table 3

Probe Hole Distribution in the Combustor Furnace Water Walls

NCB (IEA Grimethorpe) Ltd.
Pressurised Fluidised Bed
Combustion Project
Grimethorpe Experimental Facility.

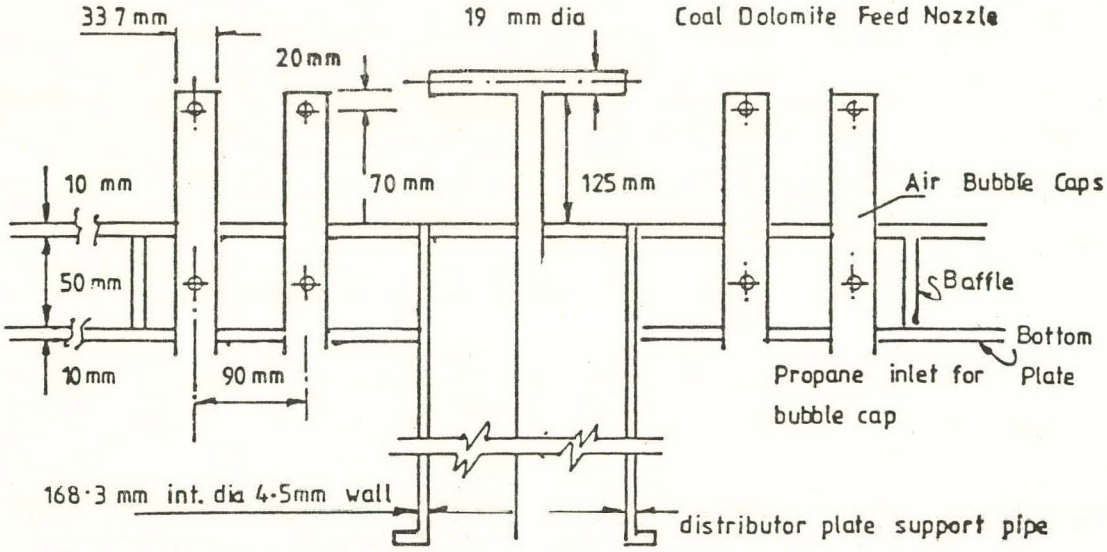


Section through Distributor Plate

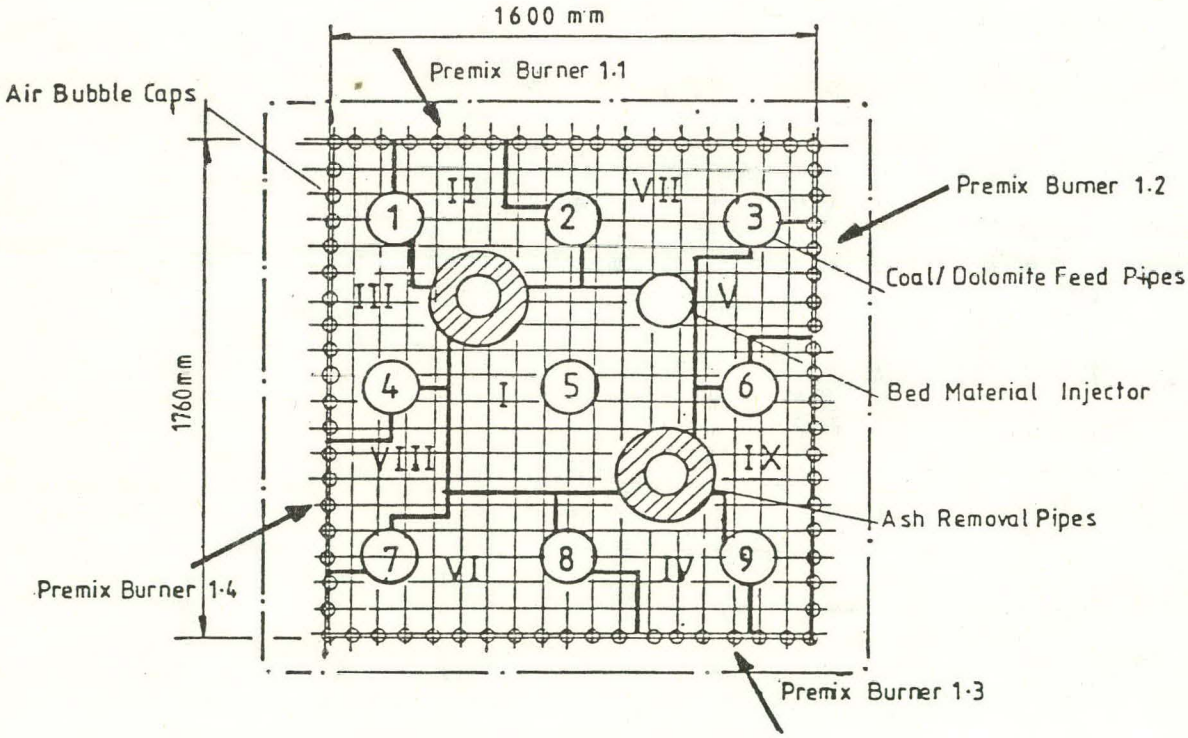


Plan of Distributor Plate

FIGURE 4 Combustor Furnace Distributor Plate Design

NCB (IEA Grimethorpe) Ltd.,
Pressurised Fluidised Bed
Combustion Project
Grimethorpe Experimental
Facility.

Thus probes at these levels will not distort the fluidisation pattern. Five ports in walls 1 and 3, level c/, were to provide the same service for a Tube Bank B which in all probability will not now be used. Probe holes have not been provided in walls 2 and 4 between levels b/ and g/ as both walls will be masked by the risers and downcomers of Tube Bank A.

In each of walls 1 and 3 there are 3 x 69mm, 4 x 69mm, 3 x 69mm (69mm = 2.7ins) ports at levels h/, i/ and j/ respectively. At levels h/, i/, and j/ there are 60mm (2.4ins) ports in walls 2 and 4; 2 at h/, 3 at i/ and 3 at j/.

In addition to the relatively large ports in the combustor wall, provision has been made for numerous penetrations to accommodate thermocouples and pressure probes. Their numbers can be augmented at any time during construction or experimentation as they consist of plugs drilled and threaded and welded into the web between the water-wall tubes. Those temperature and pressure measurements incorporated in the first build are discussed in detail in Section 8.

As a safety measure 10 thermocouples are attached to the outer surface of the refractory lined exhaust-gas outlet to detect overheating.

## 4.4 Distributor Plate

### 4.4.1 General Description

The distributor plate designated DP1 is of bubble cap design and is supported from the bottom dome of combustor pressure shell by the 168.3mm (6ins) N.B. pipes through which the fuel injection lines enter the bed. The plate is 1760mm x 1600mm (5ft 9ins x 5ft 3ins) in size. DP1 has nine fuel feed nozzles.

Distributor Plate DP1 (see figure 4) consists of an upper and lower plate separated by baffles which divide the space up into nine compartments 50mm (2ins) in depth. (See figure 4). The plate is 10mm (0.4ins) thick and all joints are butt welded. The air bubble caps penetrate through both plates, each of 33.7mm o.d. x 3.2mm wall (1.3ins o.d. x 0.13ins) arranged on a 90mm (3.5ins) square pitch. Each bubble cap has an open bottom end into the air space below the distributor wall and the pressure vessel wall, to pass up through the bubble cap into the furnace. The upper end of the bubble cap is sealed, therefore the air is made to pass in the furnace via 26 3mm (0.12ins) holes drilled around the periphery of the cap in two rows of 13, the upper row being 70mm (2.8ins) from the distributor plate upper surface. During the operation of the fluidised bed,bed material falling below the bubble cap exit orifices will form a static layer which will serve as an insulating layer and so help to control the temperature of the plate.

The space between the two leaves of the distributor plate is divided into nine compartments as shown in Figure 4 and ten of the bubble caps passing through each compartment have an additional perforation situated between the upper and lower plate 'seeing' into the compartment. Each compartment has an individual propane supply burnt during the start up procedure to warm up the bed and ignite the coal. Air flow through the bubble caps is established during start up, and during the ignition and warm up sequence propane is supplied separately and controllably to each of the nine distributor plate compartments in a supply pattern compatable with a safe and orderly ignition procedure. The propane from a compartment flows into the bubble caps via each orifice between the upper and lower plates and mixes with the air such that each bubble cap acts as a premix propane burner. The total propane heat input through the plate will be 9MW ($3.1 \times 10^7$ Btu/h), with the heat input via each compartment being controllable in the range 0.5 - 1.5MW.

The nine fuel feed pipes incorporated in the DP1 design penetrate through the distributor plate on a 600mm (23.6ins) square pitch. Each fuel feed pipe runs from the fuel transport line into the combustor inside a 168.3mm o.d. x 4.5mm wall (6.63 ins o.d. x 0.2ins) pipe, the upper section of which is an integral part of the distributor plate. It is upon this pipework that the distributor plate is supported at one of three specified positions in relation to the bottom of the Tube Bank. The three positions, 600mm, 750mm and 900mm (24ins, 30ins and 35ins) approximately from the bottom of the in-bed Tube Bank, are changed by the insertion or removal of flanged spacing pipes in the fuel feed and distributor support pipes.

The fuel feed pipes of 19mm NB (0.75ins) terminate above the bed in 'tee' shaped nozzles as indicated in figure 4 which may be two way, three way or four way depending on the position of the nozzle on the distributor plate in relation to the furnace walls.

The two ash removal pipes are 323.6mm o.d. (1ft 2ins) and have an internal refractory lining 75mm (3ins) thick leaving an internal bore of 156mm (6ins) and have similar flanged spacing pipes to match the position of the distributor plate. Each of the ash removal pipes is provided with external heating coils to minimise differential expansion when only one pipe is in operation.

The mobility of the distributor plate in relation to the static furnace water wall generates the problem of a gas seal between the distributor plate and the water wall. The original design involved a flexible stainless steel seal between the distributor plate and the furnace wall. This seal failed during hot commissioning in September, 1980 due to overheating. The design was, therefore, modified to provide horizontal heat shields above the stainless steel seal which was moved to a lower position. Although this modification has been successful, it is likely that in the near future the distributor plate will be welded to the water walls, thus eliminating the seal.

## 4.5 Steam Water Circuit

### 4.5.1 General

Heat transfer from both the fluidised-bed and the off-gas is undertaken by a number of horizontally orientated tube bundles, so designed as to present the necessary surface area for required duty with the minimum of disturbance of the necessary bed particulate flow patterns for efficient operation. All of the heat-transfer tube bundles installed in the combustor and heat exchanger are connected to complete the steam water circuit in specific arrangements to provide superheated steam at outlet of 30 bar (435 psia) and 440°C (834°F) temperature.

The operating variables which effect the quantity and rate of heat available from the combustion process are the air mass flow; combustor pressure, fluidising velocity, bed temperature and excess air. To provide proper heat transfer from the wide range of operating conditions required, it will be necessary to have a variety of Tube Banks, of which two were envisaged in the first build, namely Tube Banks A and B. Those operating conditions to which Tube Banks A and B are designed are broadly outlined in table 4. They differ in the area of heat exchange surface available. The heat release in the Tube Bank B condition is less than for Tube Bank A conditions, but because of the smaller bed particle size used in Tube Bank B conditions, higher in-bed heat transfer co-efficients will be experienced. The Tube Bank B condition was chosen because at the time of design, 1977, it was the maximum heat release rate attained at CURL, Leatherhead, and was intended to establish the scale-up factor. Tube Bank A was to be installed in the first build of the Grimethorpe Experimental Facility. During the intervening years, the CURL rig has been uprated and it is now unlikely that Tube Bank B will be used.

The duties of heat transfer coils in the furnace were specified to the contractor based on Coal Utilisation Research Laboratory experience. The two in-bed coils were specified. Tube Bank A extracting 34MW ($11.6 \times 10^7$ Btu/h) of heat in a bed temperature of 850°C (1560°F) and Tube Bank B extracting 6.8MW ($2.3 \times 10^7$ Btu/h) of heat at a bed temperature of 850°C (1560°F). In the case of Tube Bank A, an additional 'Freeboard Cooler' was called for, capable of controlling the off-gas temperature from the furnace by extracting heat at controllable rates in the range 0 - 5MW ($0-1.7 \times 10^7$ Btu/h) should significant combustion occur above the fluidised bed.

For the in-bed tube banks it was additionally specified that the horizontal run of tubing should be maximised, that the tube pitching should be triangular, and that the horizontal and vertical distances between tubes centres should not be less than 2.5d and 2.0d respectively where d is the tube outside diameter.

Table 4

| | | Tube Bank A | Tube Bank B |
|---|---|---|---|
| Excess Air | % | 20 - 50 | 100 |
| Pressure | bar | 10 | 6 |
| | psia | 145 | 87 |
| Velocity | m/s | 2.5 | 1.25 |
| | ft/s | 8.2 | 4.1 |
| Temperature | $^{o}C$ | 850 | 850 |
| | $^{o}F$ | 1560 | 1560 |
| Expected Coal Heat Input | MW | 65 - 80 | 14.4 |
| | $10^6$Btu/h | 222-273 | 49 |
| Heat Absorbed by bank | MW | 28.4 | 6.8 |
| | $10^6$Btu/h | 96.9 | 23 |
| Bed-side film Co-efficients: (including radiation): | | | |
| Water Walls Immersed | $W/m^2K$ | 230 | 400 |
| In Bed | $Btu/ft^2/h^oF$ | 41 | 71 |
| Evaporator Section | $W/m^2K$ | 350 | 425 |
| | $Btu/ft^2/h^oF$ | 62 | 75 |
| Superheater Section | $W/m^2K$ | 440 | 515 |
| | $Btu/ft^2/h^oF$ | 77 | 91 |

NOTES:

1. TUBE BANK A - excess air and coal heat input not exactly known (to be established during experimental programme). Heat absorption value excludes heat absorbed by water walls within the bed.

2. TUBE BANK B - duties can be predicted with reasonable precision: Heat absorption value includes heat absorbed by water walls within the bed.

Table 4
Design Basis for
Tube Banks A and B

NCB (IEA Grimethorpe) Ltd.
Pressurised Fluidised Bed
Combustion Project
Grimethorpe Experimental Facility.

### 4.5.2 A Process Description of the Steam-Water Circuit

#### 4.5.2.1 General Description

The steam conditions at the stop valve of the existing power station are 440°C (824°F) and 30 bar (435 psia) pressure. Steam of this quality used to be fed by 3 or 4 boilers via a common header to three 20MW turbines. The boiler house of Grimethorpe Colliery Power Station contained 5 natural circulating steam generators where one was used as a standby unit. The Power Station is no longer a commercial generating station and is operated solely as a service to the Experimental Facility. One of the 5 boilers has been decommissioned.

The Experimental Facility is connected to the Power Station common header which allows the exchange of steam with the Power Station. During running of the fluidised-bed combustor enough standby is provided by existing boilers to cater for a failure in the research plant.

The steam generator of the fluidised-bed unit is a 'once-through' boiler, which is the most suitable arrangement with a fast dynamic response, so that there is the highest possible flexibility.

The maximum heat input capability of the Facility is designed as approximately 80MW ($2.7 \times 10^8$ Btu/h) for the 'first build' plant and will, during the research programme, change as design changes are made. The possible range will be between 20 and 90MW ($6.8 \times 10^7$ and $3.1 \times 10^8$ Btu/h) heat input.

#### 4.5.2.2 The Design of the Steam-Water Circuit

The basic flow sheet of the steam-water circuit for the Tube Bank A datum condition is shown in Figure 5. Having included a once through boiler, the plant requires a higher water quality than is available in the condensate system of existing power station. Therefore, two on line mixed bed de-ionisation units are provided to increase the feed water quality to the required standard (see table 9 ). After passing the deaerator the feed water is pressurised by two of three 50% feed pumps and in case of an emergency condition like total power failure, a diesel driven 20% emergency feed pump takes care of cooling during the shut down of the system (see section 11.3).

The feed water, entering at some 110°C (230°F) is first heated in the heat exchanger walls then passed through the 'last' coil of the heat exchangers designated 1a, (see Figure 5) which can be partly bypassed by manual selection. The water then is further heated in the combustor water walls and at the outlet it reaches a temperature of about 220°C (428°F) which is 20°C (68°F) below the evaporation temperature.

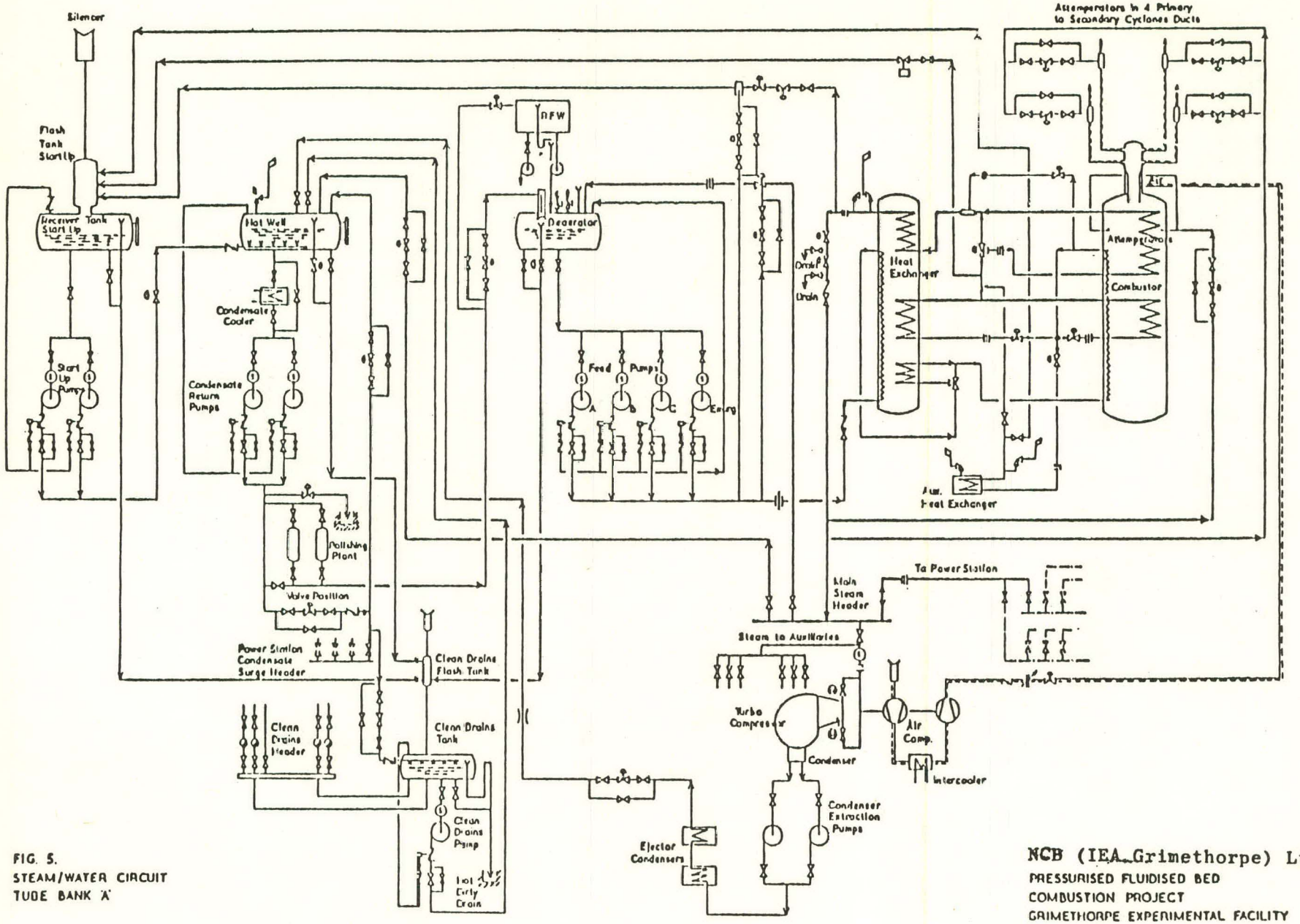


FIG. 5.
STEAM/WATER CIRCUIT
TUBE BANK 'A'

**NCB (IEA Grimethorpe) Ltd.**
PRESSURISED FLUIDISED BED
COMBUSTION PROJECT
GRIMETHORPE EXPERIMENTAL FACILITY

Figure 5

Then the water can be distributed to three different tube coils which are in 'In Bed Tube Bank', a tube bank in the main heat exchanger, designated 3a, and the heating surface of the auxiliary heat exchanger, which may or may not be required. The distribution to these coils is controlled in such a way as to ensure similar temperatures at the header where all three streams reassemble. At that point the water is totally evaporated and slightly superheated.

The 'Freeboard Tube Bank' can be almost completely bypassed depending on the exhaust gas temperature at the outlet of the combustor and it is controlled automatically using a three way valve.

The de-superheater which is installed upstream of the final superheater, designated 5, situated in the 'hot end' of the main heat exchanger, controls the final steam outlet temperature to 440°C (824°F) and ensures that the material of this superheater is not heated up above its mechanical limits.

The steam at datum conditions (440°C, 30 bar) is then used in the plant's turbine to drive the main compressor, and the surplus is delivered to the steam range of the existing power station.

4.5.2.3 <u>The Steam/Water Circuit Start-up System</u>

Before Steam of the required quality can be used in Turbo-Compressor and/or exposed to the Power Station, a Start-up sequence will take place. When the Propane Burners in the Combustor are switched on to heat the Fluidised Bed, and the Turbo-Compressor is driven by Power Station Steam, a separate circulation of Feed Water through the Heat Exchanger and the Combustor has to be established to ensure the cooling of the tubes.

The flow path of the cold Feed Water is the same as during operation except that the water is diverted to the Start-up Flash Tank before it reaches the Freeboard Cooler and the final Superheater.

As the heat input of the Plant is increased, the water reaches its evaporation point and, because it is de-pressurised in the Start-up Flash Vessel, Steam will be vented to atmosphere through a silencer. The water is separated and flows into the Start-up Receiver Tank. From there it is pumped to the Hotwell, which is an equilibrium tank to eliminate disturbance caused by different pumps delivering into the same line. The level of the Hotwell is kept constant by adding Make-up Water from the Power Station.

From the Hotwell, the water is delivered through the mixed Bed De-ionisation Units to the Deaerator and from there the circuit is again the same as during normal operations.

Figure 6

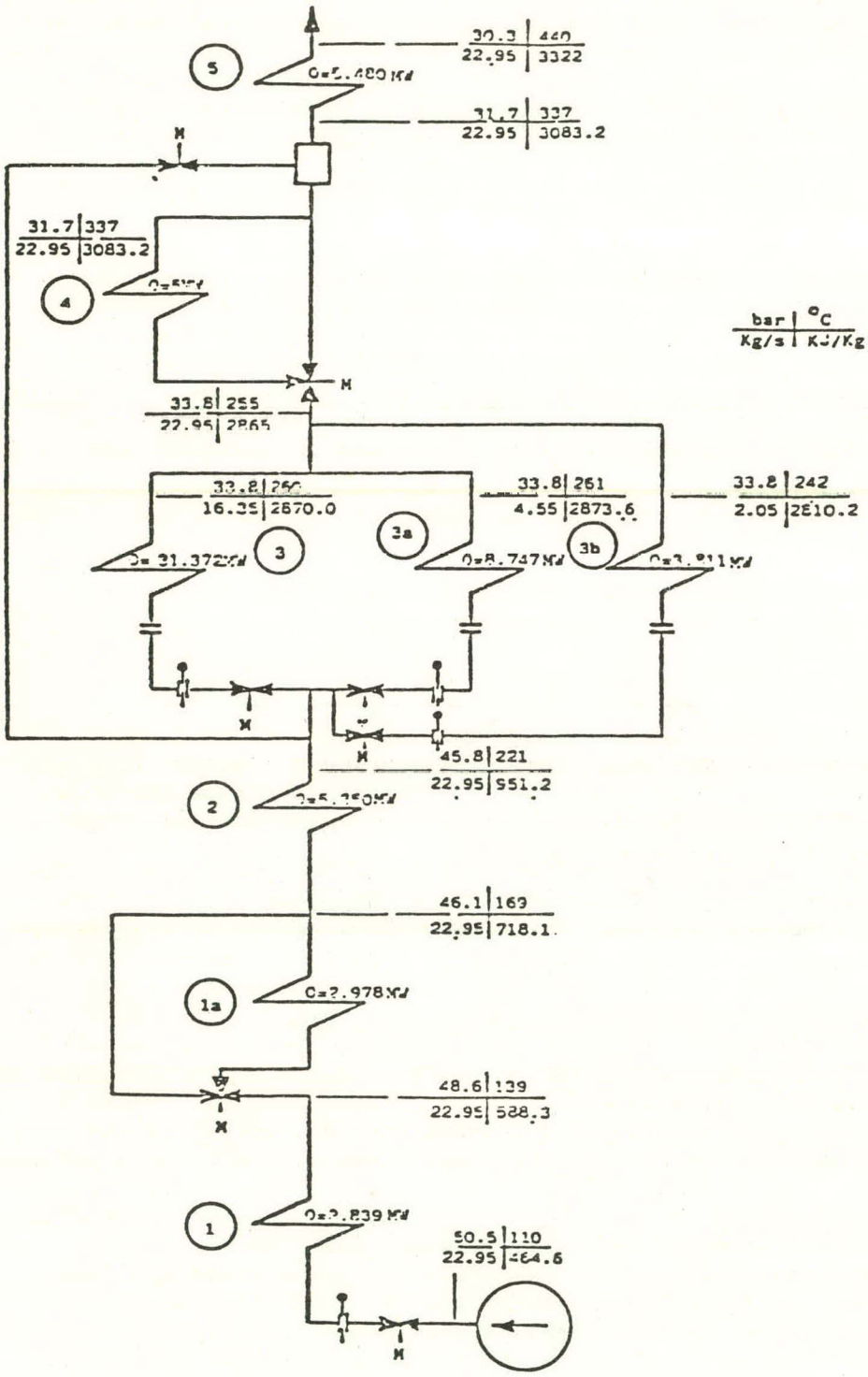


Figure 6
Heat and Mass Balance
Tube Bank A Conditions

NCB (IEA Grimethorpe) Ltd.
Pressurised Fluidised Bed
Combustion Project
Grimethorpe Experimental
Facility

When Steam at the outlet of the Evaporator Tube Bundles reaches a temperature slightly above the evaporation point dry Steam is produced by the Boiler. Then the path through the Freeboard cooler and the final Superheater can be opened and the outlet Steam Temperature increased further towards the design point. Until the conditions of the Power Station (440°C, 30 bar) are reached, the Superheated Steam is still dumped through a by-pass line at the Superheater outlet in the Start-up Flash Tank. This line contains a de-Superheater down stream of the pressure let down station to recover as much Feed Water as possible.

As the right Steam conditions are reached the automatic interlock system gives clearance for the operator to switch from the Blow-off line to the Power Station Main Header. At this point, stable operation has been established. If due to changes in operation, the Steam Temperature or Pressure is not within tolerable limits for the supply to the Power Station, the interlock system automatically switches back into Start-up Mode and the Steam will be dumped. The operator then re-establishes suitable steam quality or begins with the shut down sequence, which in principle is the reverse of Start-up. The heat and mass balance for Tube Bank A conditions with both Freeboard Cooler and auxiliary heat exchanger in circuit is shown in figure 6.

#### 4.5.2.4 Condensate Recovery System

At a late stage in the design and construction of the Experimental Facility, at a time coincident with the Power Station ceasing to be a commercial unit, it was decided that a significant proportion of the experiments to be conducted with the Tube Bank A build would be at conditions which would not produce range quality steam. Some method of condensing and recovering low grade steam was required. It was, therefore, decided to decommission No. 3 Turbo-generator in the Power Station, which is the one closest to the Experimental Facility, and to utilise its condenser as a sink for the low quality steam.

The Condensate Recovery System (CRS) and its interconnection with the Facility is shown in the P. & I. Diagram, Figure 7. The system is capable of receiving the full output of the steam water circuit at design conditions of 440°C, 30.3 bar abs.

Low quality steam produced in the Facility is diverted through line SH5112 to the pressure reducing valve SH9506. Downstream of that valve the steam is attemporated and then enters the flash tank. The main pipeline of the CRS is connected to the vent line from the flash tank to atmosphere. The hydraulically actuated butterfly valve SH9619, installed downstream of the connection, serves to cut off the vent and divert the steam into the CRS. The system is designed for a steam pressure of 4 bar abs. to keep the pipe dimensions within reasonable limits. The pressurisation did not require any alteration to the existing vessels (flash tank, start-up vessel) which are designed for a pressure of 10 bar although initially being used at atmospheric pressure.

The main steam pipeline (NB400) breaks through the wall between the Facility and Power Station and runs to the condenser of the turbo-alternator set no. 3 of the Power Station. Before entering the condenser the steam is reduced in pressure and temperature by passing it through the pressure reducing valve SL9623 and a desuperheater. In the condenser the steam is dispersed by an arrangement of two perforated pipes which allows continued use of the turbo-alternator set. The condensate is delivered to the condensate surge header by the existing extraction pumps which also supply the spray water for the desuperheater.

Emergency spray water supply from the surge tank of the Power Station is provided by the spray water pump when the extraction pumps trip out due to low level in the condenser.

Sets of pressure switches on the main steam pipeline and on the condenser operate various interlocks which prevent any part of the system to over pressurise. In addition to that, a safety valve is installed on the main steam pipeline and a rupture disc for the condenser is on order. This ensures safe operation of the system according to good engineering practice and the requirements of the insurance company.

An additional benefit of the CRS is that waste steam from the Research Instrumentation system can be recovered in the CRS, thus eliminating losses from this source and any requirement for a separate recovery system for the Research Instrumentation.

### 4.5.3 In-Bed Tube Bank

Tube Bank A consists of 42 separate heat transfer circuits each constructed as a serpentine coil in the vertical plane with radiused bends fabricated from 31.8mm o.d. x 4.5mm (1.25ins x 0.12ins) wall tube in either 15Mo3 or 10CrMo 910 steel. The spacing of each coil is 44.5mm (1.75ins) centre to centre each coil being half pitch displaced vertically from its neighbour to provide the overall triangular pitch. At five levels within the tube bank the symetry is disturbed to effectively eliminate an almost entire horizontal row of tubes for the accommodation of transverse probes. Tube Bank A contains $170m^2$ ($1829ft^2$) of heat transfer area.

### 4.5.4 Freeboard Cooler

Combustion of elutriated fines to be expected in the freeboard zone above the fluidised bed may result in an elevated off-gas temperature in excess of the datum $900^{\circ}C$ ($1652^{\circ}F$). To cool the gas and transfer the heat into the steam water circuit, provision has been made for a freeboard cooling coil capable of 10,000 hrs. operation at $900^{\circ}C$ ($1652^{\circ}F$). To control overcooling of the off-gas, provision has been made to turndown the steam mass flow in the freeboard coil to give a maximum turn down in heat transfer of 5:1.

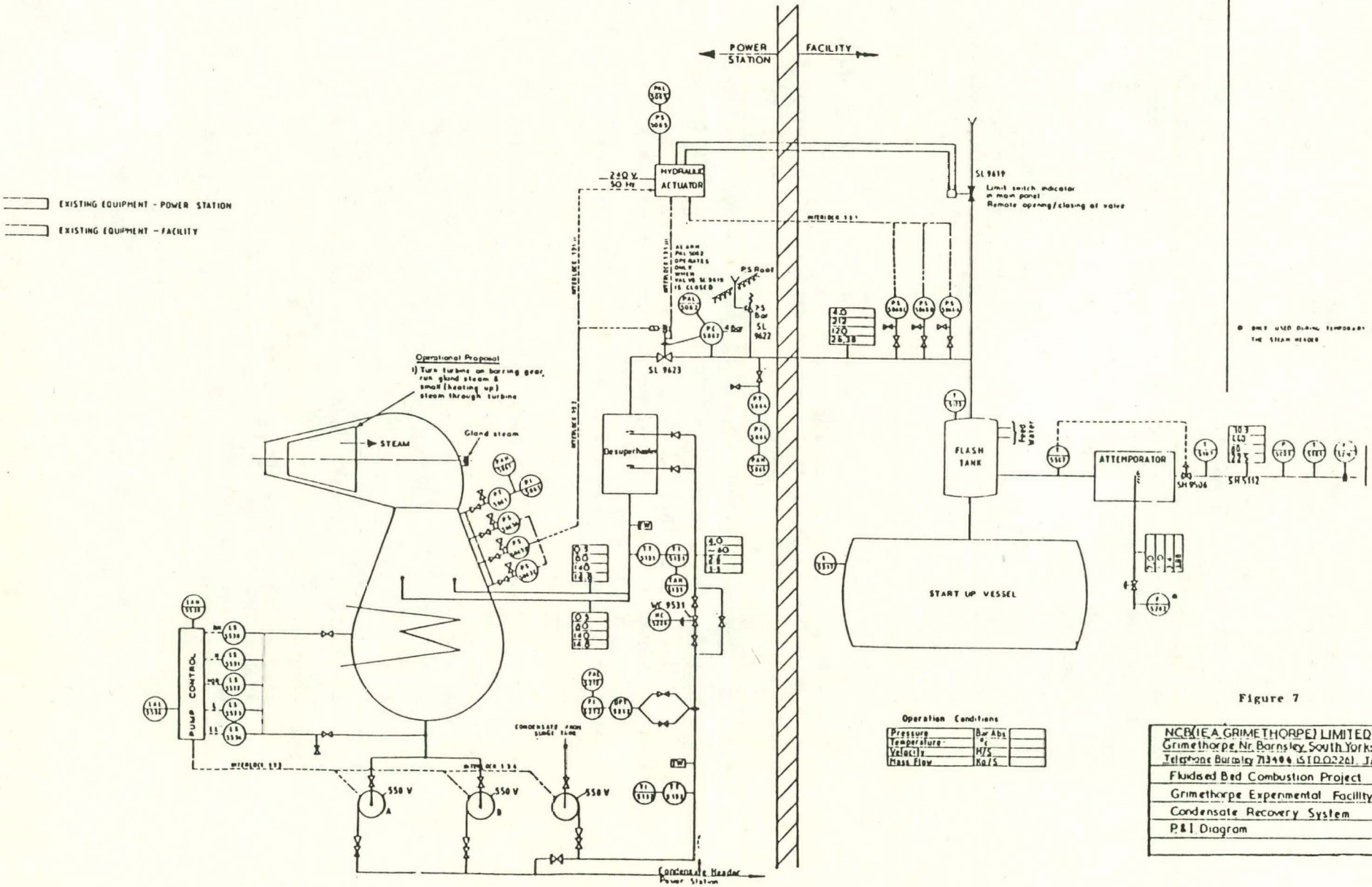


Figure 7

NCB(IEA GRIMETHORPE) LIMITED
Grimethorpe, Nr. Barnsley, South Yorkshire
Telephone Barnsley 713404 (STD 0226), Telex
Fluidised Bed Combustion Project
Grimethorpe Experimental Facility
Condensate Recovery System
P & I Diagram

The freeboard coil consists of 28 separate circuits supplied from a distributor and presents $57m^2$ ($613ft^2$) of total heat transfer surface. The coil is fabricated from SANICRO 32X 38mm o.d. x 4mm tubing. (1.50ins x 0.16ins) (See Appendix III). The circuits are formed in two geometries, the first as a single square bend of 445mm (17.5ins) pitch terminating either end in a parallel hairpin bend of 150mm (5.9ins) pitch with a straight limb length of 1625mm (5ft 4ins). The first bend commences after a 1995mm (6ft 6.5ins) straight vertical from the distributor. All bends are of 75mm (3.0ins) radius. The second geometry is the converse of the first being two square bends of 445mm (17.5ins) pitch joined by a single parallel hairpin of 150mm (5.9ins) pitch.

The two geometries are interdigitated in a 130mm (5.1ins) tube centre to centre spacing to form a single planar coil arranged in fourteen planes linked by the header and collector. The arrangement forms a tube bank 1040mm (40.9ins) in height.

### 4.5.5 Heat Exchanger

#### 4.5.5.1 General Description

The heat exchanger lies in the gas path after the cyclonic gas clean up and provides the heat recovery by gas flow over a series of heat transfer tube banks enclosed by an elongated box section formed of water walls, the whole being housed in a pressure vessel. For the purpose of the steam water circuit heat and mass balances the heat transfer tube banks are designated as 1a, 3, 5,. Flue gas entering the top of the pressure vessel immediately enters and passes down through a water walled enclosure containing horizontal tube banks. The gases then pass upwards between the water-walled enclosure and the pressure shell and exit at the top again.

#### 4.5.5.2 Heat Exchanger Pressure Vessel

The heat exchanger pressure vessel 15,561mm (51ft) overall length is composed of the pressure shell capped at each end by a pressure dome. (See figure 8). The pressure shell, 12230mm long by 3000mm (40ft 1in x 9ft 10ins) diameter and of 22mm (0.9ins) wall thickness is fabricated from $17Mn^4$ steel. The bottom end terminates in the flanged connection for the bottom dome. Services to the heat exchanger internals penetrate the pressure shell. Their locations are described here, all distances referring to the bottom flange face. Ten of 47mm (1.9ins) diameter in two horizontal arrays of 5 at 8130mm (26ft x 8ins) and 8230mm (27ft) spread at $5^o$ intervals, one of 124mm (4.9ins) diameter at 3290mm (10ft 9ins); five of 149.4mm (5.9ins) diameter at 490mm (1ft 8ins); 1100mm (3ft 7ins); 4500mm (14ft x 9ins); 9830mm (32ft 3ins) and 12230mm (40ft 1in); two of 288.9mm (11.4ins) one of which is at 9250mm (30ft 4ins) and the other 12230mm (40ft 1in). All of the penetrations are in a vertical line except for the 47mm (1.9ins) diameter penetrations which are symmetrical about this line, and the 149.4mm (5.9ins) penetrations at 12230mm (40ft 1in) which is diametrically opposite to this line.

The bottom dome is of 1050mm (3ft 5ins) depth, and the flange fitted to the heat exchanger pressure shell is to DIN 28014. A single elliptical, axially centred manhole 320mm/420mm (12.6ins x 16.5ins) is provided.

The top dome is butt welded to the main pressure shell, and is of 1850mm (6ft 1in) depth from an upper flange is fitted into the main gas duct, and also supports two gas outlet flanges of 500mm (1ft 8ins) nominal diameter centred 1300mm (4ft 4ins) from the weld face.

4.5.5.3 Heat Exchanger Water-Walled Enclosure

The four water walls arranged as a long square box, direct the gas path over the contained tube banks. The gases then pass upward between the water walls and the pressure shell, outletting via the 500mm diameter flanged connections at the top.

The front water wall so nominated for elevation purposes is 1260mm (4ft 3ins) in width containing 21, 26.90mm x 4mm (1.1ins x 0.16ins) wall single vertical tube circuits, 11016mm (36ft 1in) in length from centre of the inlet header to the centre of the outlet header, and is fabricated in st 35.8 II steel. The tubes are finned together by 6mm RS - 1 - 37 - 2 plate providing a tube gap of 33.1mm (1.3ins). The structure is workshop welded, the fins supporting welded brackets for fixing the tube banks.

The nominated rear wall is identical to the front water wall. However, at 7860mm (25ft 9ins) and 7960mm (26ft 1in) from the centre of the water wall inlet header centre, the separate outlet tubes from the Tube Bank 3a penetrate through the wall. 40mm (1.6ins) diameter holes are drilled in the water wall tube fins to accommodate these tubes which necessitates widening the tube to tube gap to 55.1mm (2.2ins) and closing the conjugate gap to 10mm (0.4ins).

The nominated right side wall is 1552mm (5ft 1in) in width and has an overall length 11176mm (36ft 8in) from the centre of the inlet header to the centre of the outlet header.- The free length of each tube is 11192mm (36ft 9ins). There are 26 such tubes, fabricated from 26.9mm x 4mm (1.1ins x 0.2ins) st 35.8 II steel.

The nominated left side wall is similar to the right side wall in respect of the overall dimensions. However, the left side wall has four 500mm (20ins) diameter manholes allowing access into the interior space. The centres of the manways are at 2766.5mm (9ft 1in), 6566.5mm (21ft 7ins) 8881.5mm (29ft 2ins) and 11051.5mm (36ft 3ins) from the centre of the inlet header. The wall tubes are deflected about these penetrations. The latter two are off-set from the centre line 120mm (4.7ins) towards the back wall.

Figure 8

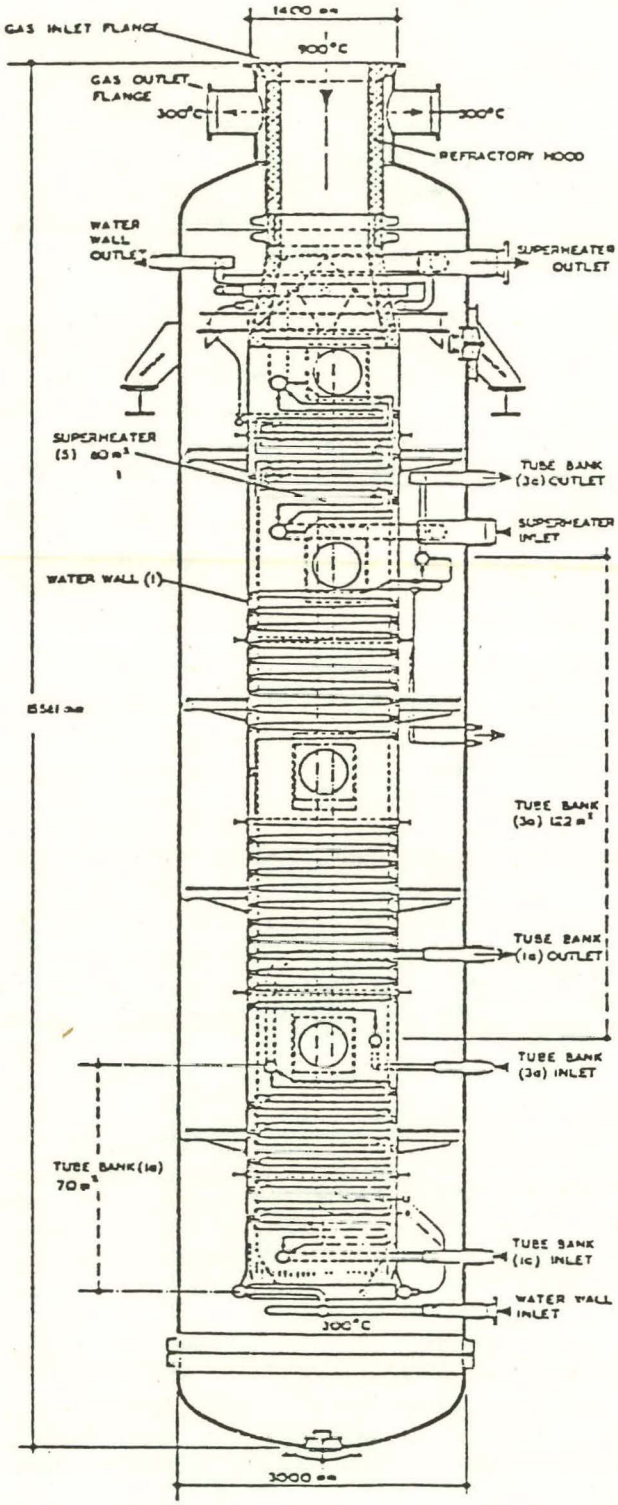


Figure 8
Heat Exchanger/Pressure Vessel
Elevation

NCB (IEA Grimethorpe) Ltd.
Pressurised Fluidised Bed
Combustion Project
Grimethorpe Experimental
Facility

| Vessel | Tube Bank | Tube o/d Wall mm | No. of Tube Circuits | Total Surface Area $m^2$ | Material |
|---|---|---|---|---|---|
| Combustor | A (3) | 31.8 x 4.5 | 42 | 170 | 15Mo3<br>10CrMo910 |
| Combustor | B (3) | 33.7 x 4.5 | 10 | 30 | St 35.8 |
| Combustor Tube BAnk A Only | Freeboard Cooler (4) | 38.0 x 4.0 | 28 | 57 | 15 Mo 3 or<br>15 Cr Ni Si 2520<br>or SANICRO 32X |
| Combustor | Waterwalls (2) | | | | |
| Heat Exchanger | Waterwalls (1) | 26.9 x 4 | 21 for front & rear<br>26 for left & right | | st 35.8. II |
| Heat Exchanger | (1a) | 38.0 x 4 | 40 | 70 | st 35.8.II |
| Heat Exchanger | (3a) | 31.8 x 4 | 20 | 122 | Uppersection 15Mo3<br>Lower section at 35.8 II |
| Heat Exchanger | Superheater (5) | 38.0 x 4 | 60 | 53 | hot X 20CrMo V121<br>10Cr Mo 910<br>cool 13Cr Mo 44 |

Table 5
Tube Bank Details of Steam Water Circuit

NCB (IEA Grimethorpe) Ltd
Pressurised Fluidised Bed
Combustion Project
Grimethorpe Experimental Facility

4.5.5.4 Heat Exchanger Tube Banks

The heat exchanger Tube Bank 1a presents a heat-transfer surface of $70m^2$ ($753ft^2$) and consists of 40 circuits each fabricated from 38mm o.d. x 4mm wall (1.5ins x 0.2ins) st. 35.8 II steel tube as parallel hairpins of 80mm (3.1ins) pitch and 1305mm (51.4ins) straight limb length alternating with 240mm (9.4ins) pitch square loops of equal limb length.

Hairpin bends are 40mm (1.6ins) radius while the square loops are bent on a 50mm (2.0ins) radius. A second coil circuit is such as to be in planar interdigitation with the first arranged with equidistant tube spacing. 20 such planar twin coils are arranged in-bank vertically with a 22mm (0.9ins) tube spacing providing a tube bank of 1178mm (46.4ins) width; 1878mm (73.9ins) depth overall. The centre line of the inlet header is 1115mm (3ft 8ins) from the pressure shell flange face whilst the outlet header centre is at 3290mm (10ft 10ins). The tube bank structure is stiffened by 42mm x 60mm x 6mm (1.6ins x 2.36ins x 0.24ins) fillet plates welded between the tubes located level with each upper hairpin straight 40mm (1.6ins) from the bend centre.

Heat exchanger Tube Bank 3a presents a heat transfer surface of $122m^2$ ($1313ft^2$) and is designed to reduce the gas temperature from 750°C to 455°C (1382°F to 833°F). Tube Bank 3a consists of a lower section of 20 circuits formed each as a coil of 22 hairpins of 35mm (1.4ins) bend radius diverging from 69mm (2.7ins) to 119mm (4.7ins), fabricated from st 35.8 II 318 x 4mm steel tube. The coil of 22 hairpins is joined by a 752mm (2ft 6ins) long straight tube to a similar upper coil having 18 divergent hairpins, fabricated from 15Mo3, 31.8mm x 4mm steel tube. All 20 coils are stacked together with each separate coil positioned vertically. The spacing between each coil is 28.2mm (1.1ins), the whole arrangement forming a tube bank 5330mm (17ft 6ins) in height from the centres of the inlet and outlet headers. The cross sectional dimensions are 1450mm (57.1ins) by 1172mm (46.1ins). The centre of the inlet header is 3620mm (11ft 11ins) from the pressure shell flange face.

The superheater Tube Bank 5 presents a heat transfer surface of $53m^2$ ($570ft^2$), and is designed to reduce the gas temperature from 900°C to 750°C (1652°F to 1382°F). The tube Bank consists of 60 coil circuits arranged in 20 vertical planes each of three interdigitated coils fabricated from 38mm o.d. x 4mm tube (1.50ins x 0.2ins). Of each triple arrangement, two coils consist of 80mm (3.2ins) pitch parallel hairpins with 40mm (1.6ins) radius bends joined by 400mm (15.7ins) pitch square loops each of 1260mm (49.6ins) straight limb length. The third circuit is a uniform square loop of 140mm (5.5ins) pitch and 1250mm (49.2ins) straight limb length. Interdigitation provides a 42mm (1.7ins) equidistant tube spacing. Each circuit is to be fabricated from three materials in approximately thirds of the length of the coil. The hot or upper third will be fabricated from X20 CrMoV121, the middle third to be fabricated from 10CrMoV121, and the cool or bottom third to be fabricated from 13CrMo44. The arrangement provides a bank 1650mm (65ins) high from the inlet header

centre to the outlet header centre, 1178mm (46.4ins) width and 1388mm (54.6ins) depth overall. Centre of the inlet header is 9250mm (36.4ins) and that of the outlet header is 10900mm (36ft 2ins) from the pressure shell flange face. Support of the tube bank is achieved by locating brackets welded to each 400mm (15.7ins) pitch outer square bend.

# 5. EXHAUST GAS CLEANING EQUIPMENT

Contractor - Head Wrightson Process Engineering Ltd.,
Contract Reference No. YCE 24/7866
Date Let - 8th February, 1977

## 5.1 General Description

This contract provides for the detailed design, manufacture and erection of the primary and secondary cyclones, the pressure let-down and control valves and all interconnecting duct work except the heat exchanger described in Section 4. but including the exhaust silencer and the connection to the chimney. The contract also includes for the provision of three sets of ash quench, depressurisation and slurry dump equipment for the fluidised bed, the primary cyclones and the secondary cyclones respectively. Additionally, all structural steel work will be supplied under this contract as required to support the equipment. Also within its supply is the combustor/pressure shell, the main heat exchanger and the fuel pressurisation and injection equipment support steelwork. This scope of this contract has proved to encompass many design difficulties requiring considerable engineering developments to overcome them.

Flue gas leaving the top of the combustor/pressure shell passes horizontally and radially from the pressure shell to the primary cyclones. Each primary cyclone is connected individually to one of the secondary cyclones which are mounted in line. Flue gas leaving the secondary cyclones enters a header, which is connected to the inlet of the main heat exchanger. Between the header and the heat exchanger provision is made for tapping off a representative sample of flue gas for the purpose of testing gas-turbine blade materials. All these cyclones and ductwork are refractory lined.

From the heat exchanger outlet low temperature ductwork connects to the pressure control system which consists of four valves; two control valves each for a specific part of the required flowrate/pressure range, a dead weight safety valve permanently set at the maximum allowable system pressure which is 10% above 12 bar (174 psia) and a pressure relief valve which can be set at any pressure between 6 (87 psia) and 12 bar (174 psia) and will relieve any pressure surge at any desired percentage above the actual test pressure. After pressure relief flue gases pass to the chimney via a silencer.

The whole ductwork system is liberally provided with access ports for the measurement of the pressure, temperature, dust loading and composition of the flue gases. All ports provided for dust sampling are 8 pipe diameters downstream and two diameters upstream of any obstruction or bend.

Dust collected by any cyclone discharges, under the influence of gravity and a one percent blowdown of flue gas directly into a quench vessel maintained at system pressure the rate of quench water flow to the vessel is controlled by the temperature of the water in the vessel. The blow down rate is maintained by controlling the flow of vent gas from the vessel. When slurry, maintained in suspension by an agitator, reaches a predetermined level it is discharged into a dump vessel which at that point in time is held

Figure 9

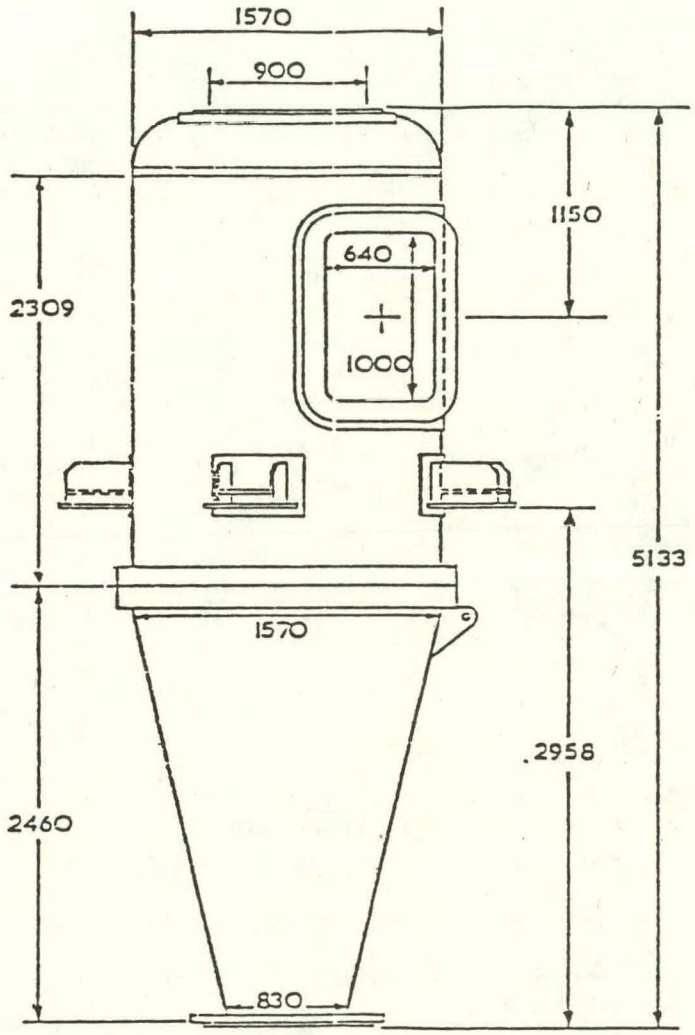


All dimensions in millimetres

Figure 9
Exhaust Gas Cleaning System-
Stairmand High Efficiency Cyclone

NCB (IEA Grimethorpe) Ltd.
Pressurised Fluidised Bed
Combustion Project
Grimethorpe Experimental
Facility

Figure 10

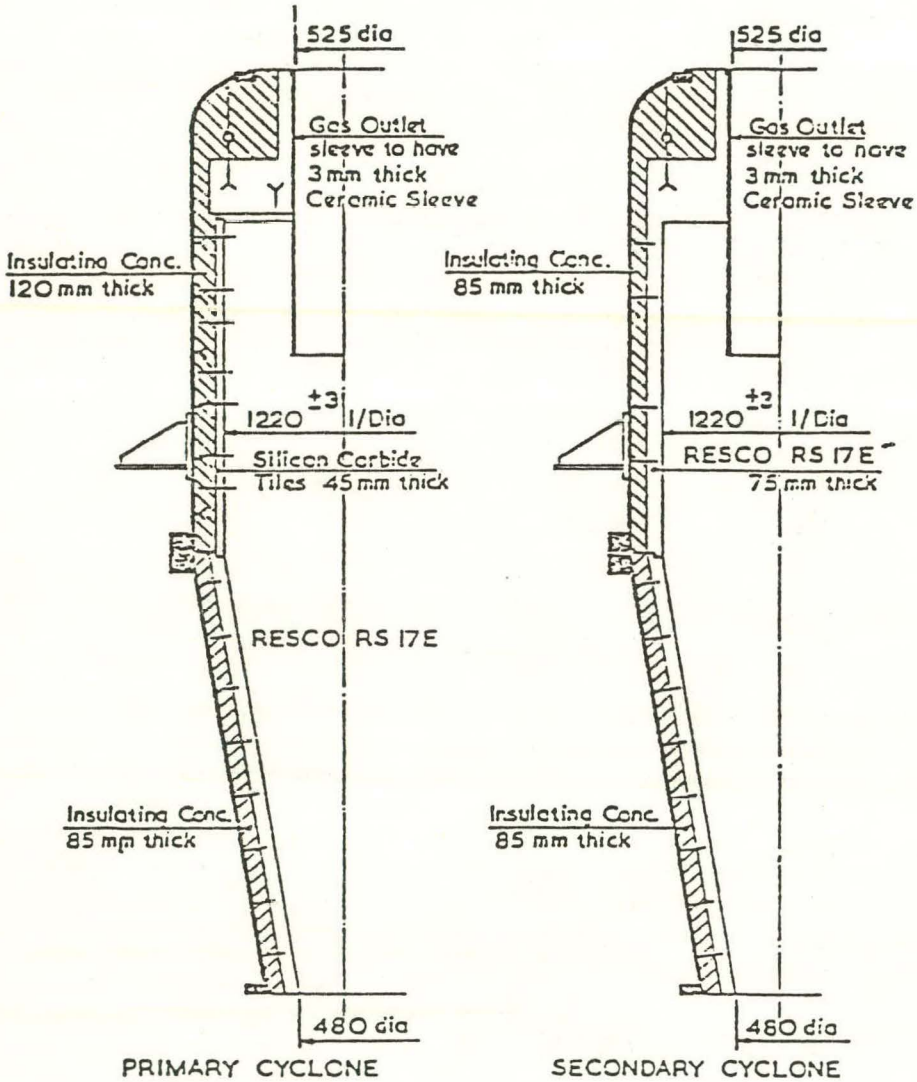


Figure 10
Stairmand Cyclone Insulating and Refractory Linings

NCB (IEA Grimethorpe) Ltd.
Pressurised Fluidised Bed
Combustion Project
Grimethorpe Experimental
Facility

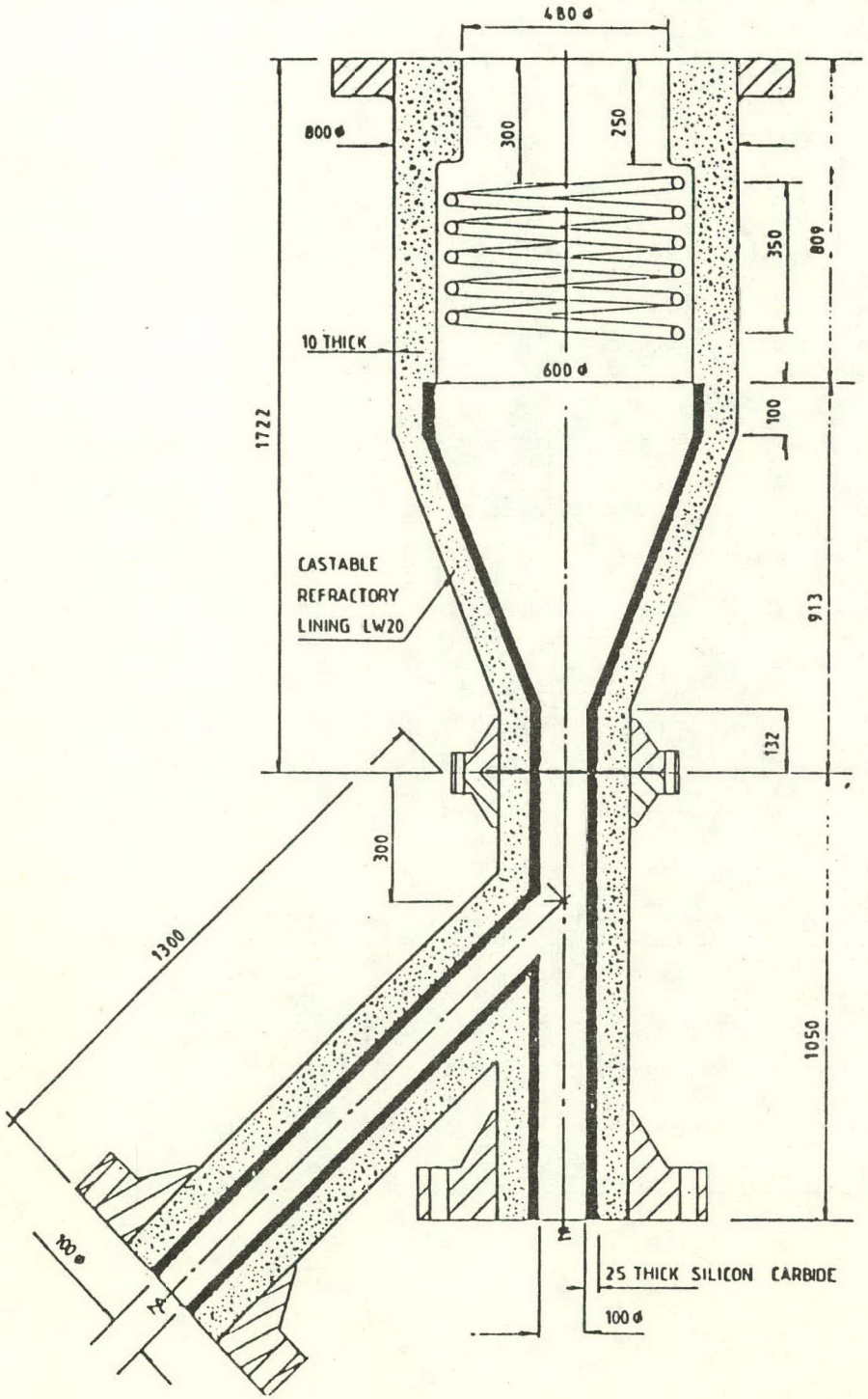


NCB (IEA Grimethorpe) Limited
Grimethorpe, Nr. Barnsley
South Yorkshire S72 7AB

IEA
COAL GRIMETHORPE

TITLE
PRIMARY CYCLONE DISENGAGEMENT VESSEL
AND SECTION OF DUST LEG FIGURE 11

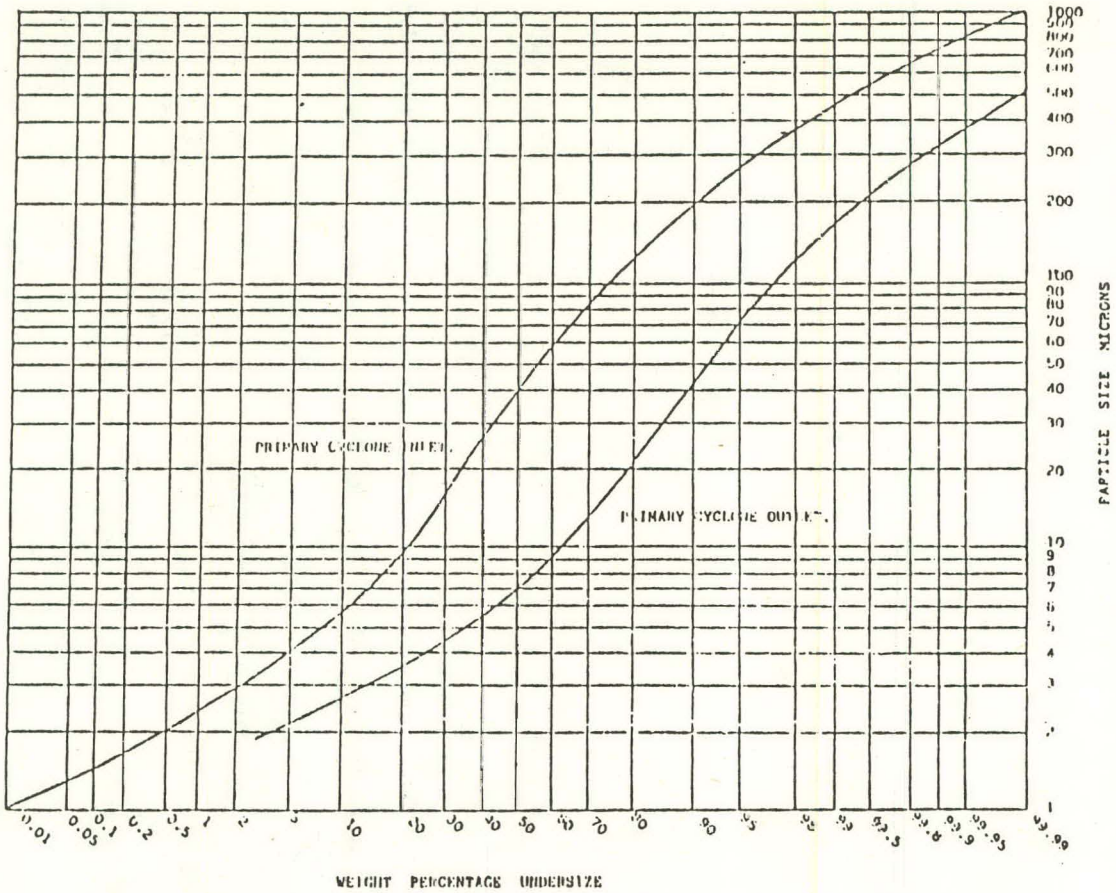


Spectrum of Dust Size
to Primary Cyclone

NCE (IEA Grimethorpe) Ltd.
Pressurised Fluidised Bed
Combustion Project
Grimethorpe Experimental Facility

Figure 12

at a pressure slightly below that in the quench vessel. When the quench vessel is nearly empty the discharge valve closes and the quench cycle repeats. The dump vessel pressure is then reduced to around 4 bar (58 psia) and the slurry discharged to the water treatment plant with the aid of slurry pumps. The system for discharging ash from the fluidised bed is essentially similar except that ash must be conveyed from beneath the combustor pressure shell to the quench vessel (see section 10.1).

## 5.2 Primary and Secondary Cyclones

For the initial build eight Stairmand high efficiency cyclones (see figure 9) provide the dust removal system. The four primary cyclones are guaranteed to be 90% efficient when receiving dust of the size spectrum shown in figure 12, similarly the secondary cyclones are guaranteed to be 68% efficient. Each cyclone has an overall length of 5133mm (16ft 10ins) and is composed of three elements i) top dished end carrying the gas outlet flange, ii) Main body carrying the gas inlet flange, iii) Main body cone. Each cyclone is refractory lined with the shell designed for a pressure of 12.2 bar (177 psia) at 165°C (329°F), tested to 23.5 bar (341 psia) and is fabricated from BG 1501 - 28 A 0.25% carbon steel. The design permits a 2.0mm (0.1ins) corrosion allowance and each cyclone is estimated to weigh 4792kg. (10,542 lbs) empty.

The top dish end has a total depth of 360mm by 1570mm o.d. (1ft 2ins x 5ft 2ins) o.d. and 15mm (0.6ins) wall thickness. The gas inlet flange is a 640 x 1000mm (2ft 1in x 3ft 3ins) flanged box section centred 488mm (1ft 7ins) from the main body centre line, and 1150mm (3ft 9ins) from the top surface of the gas outlet flange. The main body also has four support brackets welded at 2958mm (9ft 3ins) from gas outlet flange face. The bottom edge of the main body carries the top cone body flange.

The cone body is 2460mm (8ft 1in) long and of reducing diameter from 1570 o.d. (5ft 2ins) to 830mm o.d. (2ft 1ins) at the dust outlet flange, and is flange fitted to the body cone, and sealed by a 3mm (0.12ins) thick stainless steel asbestos filled gasket.

Immediately onto the base of each primary cyclone is fitted a steam cooled disengagement pot having an internal diameter of 600mm (23.6ins). The general arrangement of the pots is shown in Figure 11. Their purpose is to control any temperature rise occassioned by combustion in the concentration of carbonaceous fines at the base of the cyclones.

### 5.2.1 Cyclone Insulating and Refractory Lining

Each of the eight 'Stairmand' cyclones is lined with an insulating layer and an abrasive resistant refractory layer. The nature of the lining differs between the primary and secondary cyclones, as described below.

Primary Cyclone Lining - Both the main body and the cyclone cone are lined with insulating concrete. In the main body the concrete is 120mm (4.7ins) thick, and is pinned to the steel shell by a number of 'Y' bolts. On top of the concrete is a

a further lining of interlocking silicon carbide tiles 45mm (1.8ins) thick. The tiles are stud fixed to the steel shell throughout the concrete lining, the stud nuts being recessed into the tiles and grouted with a castable silicon carbide cement.

The cone is also lined with the insulating cement, to a thickness of 85mm (3.4ins). On top of this lining is further lining of castable 'Roscoe' RS17E refractory material. Both linings are anchored to the steel cone by a series of blind hook shaped anchor bolts.

At the body to cone join, the insulating cement joint is sealed by a ceramic fibre gasket, and the refractory lining join is sealed with RS17E grout.

After lining the internal diameter of the main body is 1220 ± 3mm (4ft). The cone outlet diameter is 480mm (19ins) and the gas outlet diameter is 525mm (21ins).

The lining of the primary cyclones is shown in figure 10.

Secondary Cyclone - The lining of the secondary cyclones is essentially similar to that of the primary cyclones except that the cyclone is lined with RS17E castable refractory throughout. The details of the refractory lining are as shown in figure 10.

## 5.3 High Temperature High Pressure Gas Ducting

The gas ducting carries the exhaust gases from the combustor to the primary cyclones for the first stage of dust removal and then into the secondary cyclones for the second stage of dust removal and finally on to the primary heat exchanger. Additionally there is a ducting limb for connection to the test cascade loop; See figure 13 and 14.

The ducting is designed to withstand temperatures up to 950°C (1742°F) and pressures up to 12 bar (174 psia) which are likely to be generated during the operation of the plant. All of the inner surfaces of the gas ducting are refractory lined. The refractory lining specification is the same as that for the cones or the cyclones. The actual bores after refractory lining are set out in Figure 15.

In describing the Exhaust Gas Ductwork, all dimensions are those of the metal pressure casing.

The ducting from the four gas outlets of the primary header, connected to the combustor gas outlet flange, is of rectangular cross section 960mm x 594mm outside dimensions (37.8ins x 24.3ins) and each is of 1825mm (6ft) length overall and is flanged at either end. Between the flanges are welded 7 stiffening ribs spaced at 230mm (9.1ins), 15mm (0.6ins) in thickness and 150mm (5.9ins) in depth. Each branch is fitted with three 200mm NB (7.9ins) flanged sampling branches.

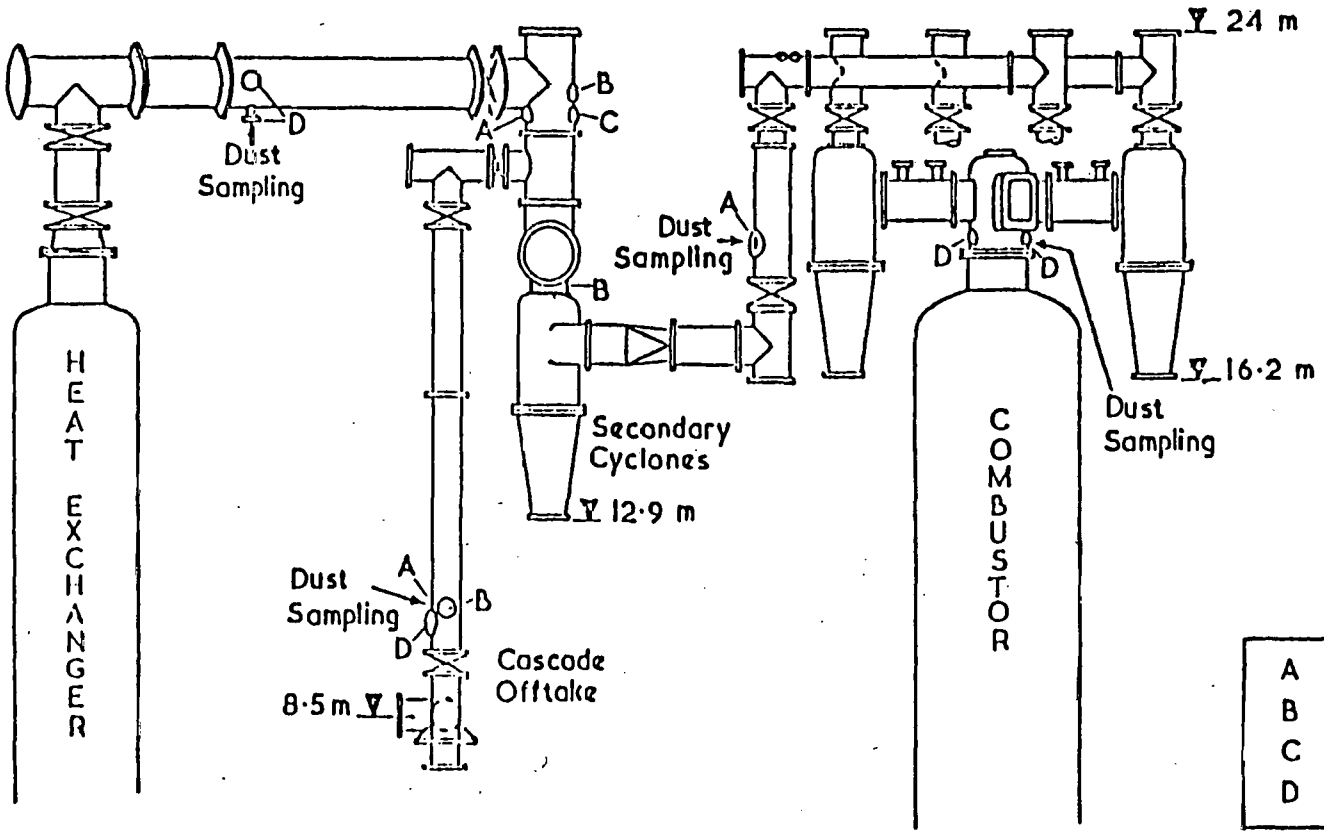


Sample Probes

| | N.B. mm | Bore after lining mm | No. off |
|---|---|---|---|
| A | 200 | 19 | 7 |
| B | 200 | 25 | 18 |
| C | 200 | 38 | 17 |
| D | 250 | 100 | 14 |

Figure 13
Elevation of High Temperature - High Pressure Ductwork

NCB (IEA Grimethorpe) Ltd.

Pressurised Fluidised Bed Combustion Project
Grimethorpe Experimental Facility

Figure 13

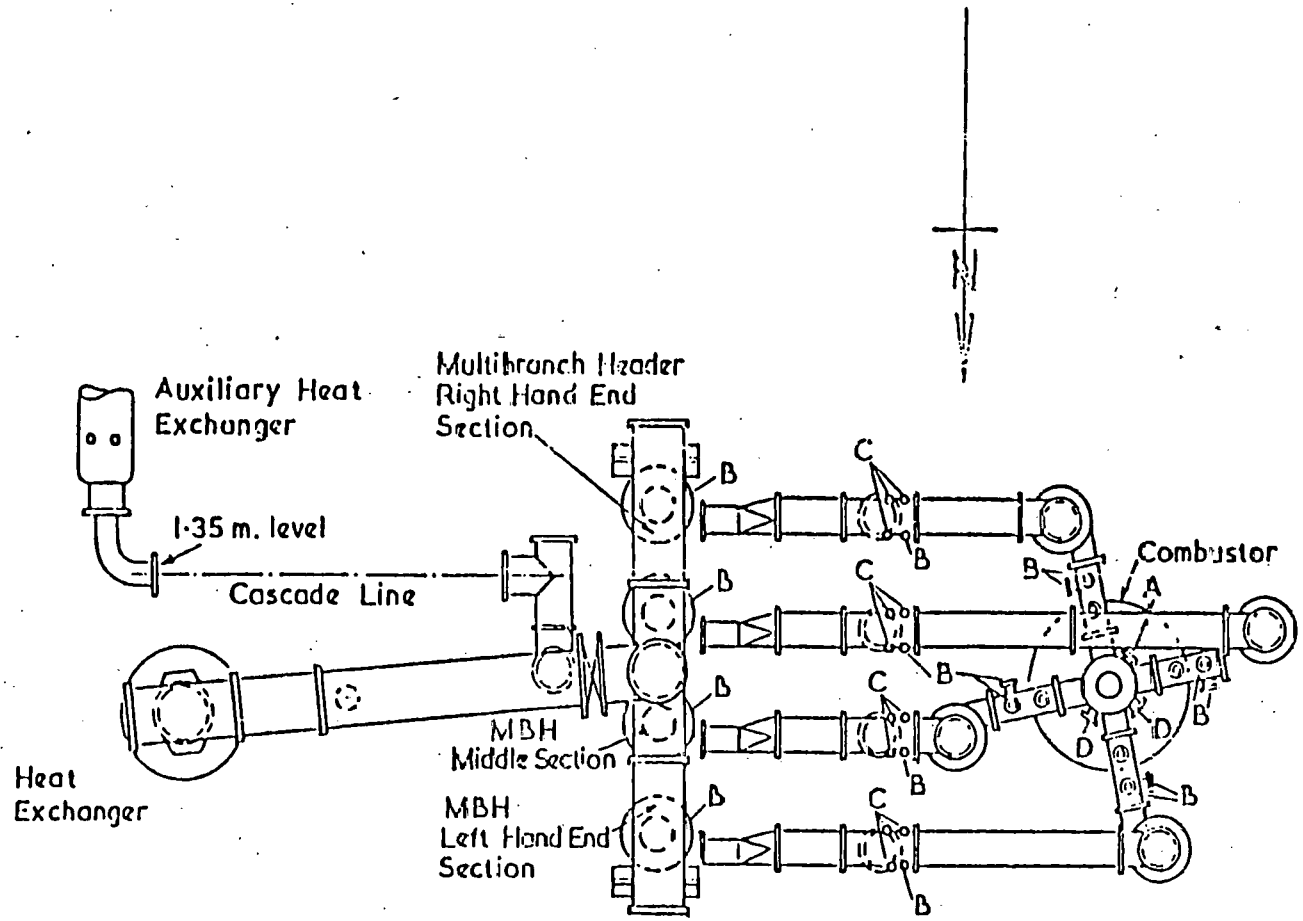


Sample Probes

| | N.B. mm. | Bore after lining mm. | No. off |
|---|---|---|---|
| A | 200 | 19 | 7 |
| B | 200 | 25 | 18 |
| C | 200 | 38 | 17 |
| D | 250 | 100 | 14 |

Figure 14
Plan of High Temperature
High Pressure Ductwork

NCB (IEA Grimethorpe) Ltd.
Pressurised Fluidised Bed
Combustion Project
Grimethorpe Experimental
Facility

Figure 14

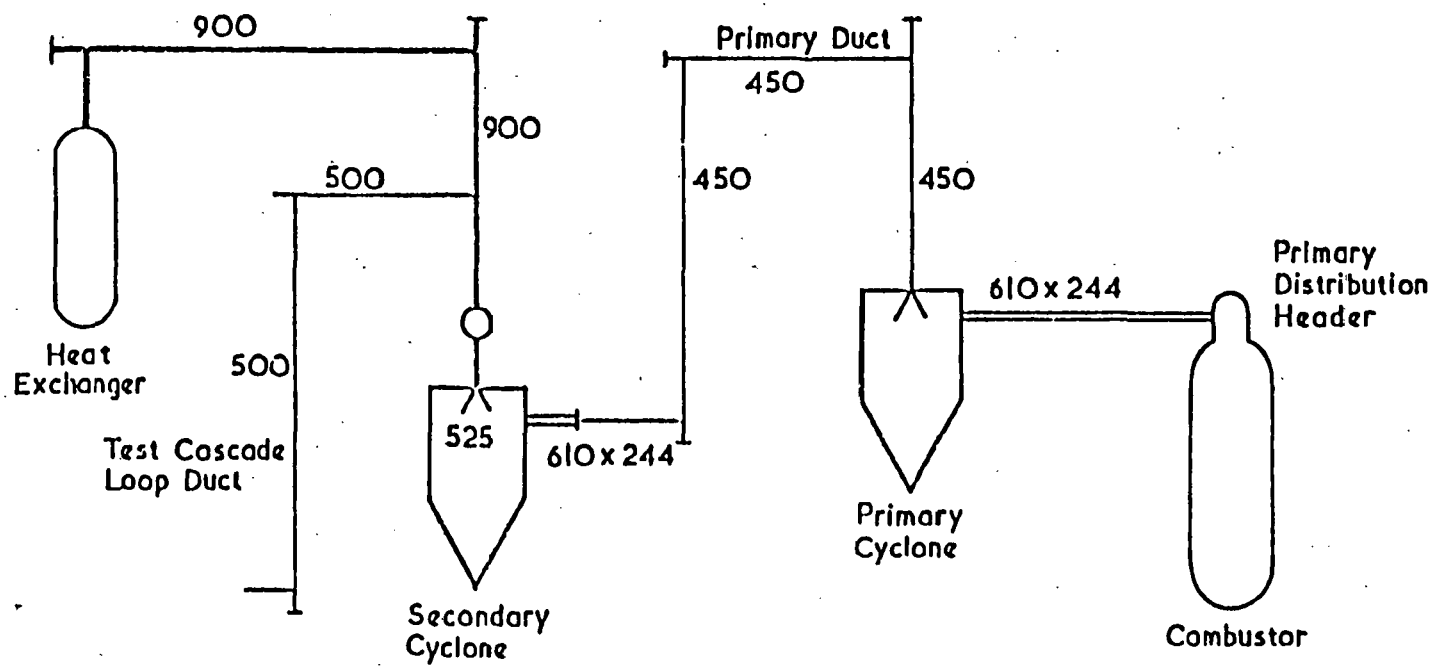


All dimensions in millimetres

Figure 15
High Temperature and Pressure Ducting
Internal Dimensions after Refractory Lining

NCB (IEA Grimethorpe) Ltd.
Pressurised Fluidised Bed
Combustion Project
Grimethorpe Experimental
Facility

Figure 15

The outlet from each of the primary cyclones is connected to a circular cross section 800mm NB (31.5ins) flanged 'tee' piece, the upper end of which is sealed by a capping plate. The horizontal outlet limb from each 'tee' piece is centred at the + 23200mm (76ft) level and each is flange fitted directly by horizontal lengths of ducting, to 'tee' pieces. The four 'tee' pieces are arranged in a line 5500mm (18ft 1in) from the centre of the combustor. Thus differing lengths of ducting are required. The nearest cyclone is a direct connection to the 'tee' piece, other lengths are 2509mm (8ft 3ins): 4959mm (16ft 3ins) and 7406mm (24ft 4ins) respectively all of 800mm (31.2ins) NB. Each 'tee' piece is 1760mm (5ft 9ins) long overall, with the limb arranged vertically downwards. Each horizontal length of the 'tee' is fitted with four 200mm NB (8ins) flanged sampling limbs arranged at 45° on the upper surface asymmetric to the centre line of the outlet to allow sampling of the actual gas stream. Each 'tee' piece limb is connected via a flanged expansion bellows to a 3909mm (12ft 10ins) vertical length of duct downcomer, flanged at each end.

These downcomers are of 800mm NB (31.2ins) and are fabricated from two sections but welded together, the lower of the two sections being fitted with two 200mm NB (8ins) flanged sample branches. The bottom flange of each downcomer is connected to an expansion bellows which in turn is connected to a 800mm (31.2ins) 'tee' piece. The bottom flange of each 'tee' piece is sealed by a capping plate which rests directly on a spring loaded support bearing upon a member of the plant support steelwork. Each horizontal flanged limb is centred at the 16950mm (55ft 7ins) level and connects directly to an 1849mm (6ft 1in) long make-up section of 800mm NB (31.2ins) ducting. Each make-up duct section is directly connected to a duct conversion piece each 1768mm (5ft 10ins) long of 800mm NB (31.2ins) at circular section end, reducing to a rectangular 930mm x 564mm (36.6ins x 22ins) internal dimension end. Each converter piece then flange connects to the inlet of a secondary cyclone. The secondary cyclones are arranged in a line, their centres being 10900mm (35ft 9ins) from the centre of the combustor. The outlets of the secondary cyclones are interconnected by a single multibranch header of 1200 NB (3ft 11ins) via separate flanged limbs 997mm long (3ft 3ins) from the header centre line. Each of the cyclone connecting limbs supports a 200mm NB (8ins) flanged sampling branch.

The multi-branch header is made up of three sections flange fitted together. Viewing from the combustor, the three sections are described here as 1) the right hand end section 2) the middle section and 3) the left hand end section. See figure 14.

The right hand end section of the multi-branch header is 3520.5mm (11ft 7ins) long overall, the outer end of which is sealed by an end plate. The outer end also rests upon the supporting steelwork via a support foot. This end section supports a single flanged secondary cyclone connecting limb centred 1850mm (6ft 1in) from the sealing plate flange face.

The middle section of the multi-branch header is 4000mm (13ft 2ins) long overall and supports two secondary cyclone connecting limbs. In addition, this section also supports a vertical limb directed upwards of 1200mm NB (3ft 11ins). The flange face of this limb is 1100mm (3ft 7ins) from the header centre line. A support foot, resting upon the supporting steelwork, is centred between the two secondary cyclone connecting limbs.

The left hand end section of the multi-branch header is 3670.5mm (12ft 1in) long overall, the outer end of which is sealed by an end plate. The outer end also rests upon the supporting steelwork via a support foot. This end section supports a single flanged secondary cyclone connecting limb centred 2000mm (6ft 7ins) from the sealing plate flange face.

The vertical limb on the centre section of the multi-branch header is flange fitted directly to a 1200mm NB (3ft 11ins) 'tee' piece having an 800mm NB (31.5ins) flanged limb connected via an expansion bellows to the test cascade loop ducting. The test cascade loop ducting consists of a top 800mm NB (31.5ins) 'tee' piece connected via an expansion bellows to a vertical flanged ducting section 3909mm (12ft 10ins). This piece directly connects to a 5876mm (19ft 3ins) long lower ducting section.

Towards the bottom flange face of the lower duct section are four flanged sampling branches, two of 300mm NB (12ins) at 900mm (35ins) and two of 200mm NB (8ins) at 1000mm from the bottom flange face. All four are arranged mutually at right angles. This lower duct section connects via an expansion bellows to two 800mm NB (31.5ins) 'tee' pieces, the last of which outlets into the test cascade horizontally at the + 8500mm (27ft 11ins) level. Above the secondary cyclone header and after the offtake to the cascade loop is a second 1200mm NB (3ft 11ins) 'tee' piece with a 1200mm (3ft 11ins) flanged limb connected via an expansion bellows into the horizontally aligned 1200mm NB (3ft 11ins) main gas duct 6318mm long (20ft 9ins). Both the take-off 'tee' and the main duct are fitted with flanged sampling branches. The 'tee' piece has two 200mm NB (8ins) each spaced at 250mm (10ins) either side of the centre line of the take-off limb. The 'tee' piece is of 2620mm (8ft 7ins) overall length and is closed at the upper flange by a sealing plate. The main d-ct has two 300mm NB (12ins) flanged sample branches 1290mm (4ft 3ins) outer end flange face. The end of the main duct is flange fitted directly to a 1988mm (6ft 6ins) length of 1200mm NB (3ft 11ins) make-up duct which in turn is connected to a 1200mm NB (3ft 11ins) 'tee' piece terminating the horizontal run and sealed by an end plate. The flanged limb of the 'tee' is directly vertically downwards and connects to the primary heat exchanger via a 1200mm (3ft 11ins) expansion bellows flange fitted to a 1200mm (3ft 11ins) duct length. This duct length is fitted to a lower expansion bellows which in turn is fitted to a 1400mm (4ft 7ins) to 1200mm (3ft 11ins) reducing piece which fits directly onto the gas flanges of the heat exchanger at the + 18998mm (62ft 4ins) level. The heat exchanger centreline to the combustor centre line is 22400mm (73ft 6ins).

## 5.4 Ash Quench and Depressurisation Systems

### 5.4.1 General Description

There are three ash streams to be handled; from the fluidised bed, from the primary cyclones and from the secondary cyclones. The distribution of solids between these three systems will depend on the ash content, the ash characteristics and the feed rate of the coal in use at any particular time. Thus each system must be designed to cope with a wide range of solids flow rates.

The maximum rates envisaged are 17 tonnes/h for the fluidised bed ash, 9 tonnes/h for the four primary cyclones and 0.7 tonnes/h for the four secondary cyclones. All three cannot approach maximum at the same time, if the fluidised-bed ash extraction rate is approaching maximum then the extraction rates from the two cyclone systems will be approaching minimum. The maximum rate of ash extraction from all three streams was estimated at 20 tonnes/h.

The principle of all three systems is to quench the ash by slurrying it in water in a vessel which remains substantially at system pressure. The relatively cool slurry is transferred to a blowdown vessel where it can be depressurised and dispersed off to the Ash Handling and Dewatering Plant.

The flow diagram of all three systems is shown in Figure 16.

### 5.4.2 Fluidised-Bed Ash Removal System

Ash is discharged from the base of the combustor through either one of two downlegs leading from the distributor plate into a horizontal cylindrical ash conveying vessel located below the combustor.

This vessel is divided into an upper and a lower compartment by porous ceramic tiles installed in the form of a rectangular funnel, the base of which is inclined at a shallow angle from the ends of the vessel to a central outlet.

Each downleg can be isolated by means of a water-cooled Kamyr control valve and provision is also made for taking ash samples from whichever downleg is in use.

On entering the vessel, the ash normally rests on the ceramic tiles but is caused to flow through the outlet by a stream of air entering the lower compartment and flowing up through the tiles. This stream of air fluidises the hot ash and transports it through an ash transfer line, into the ash quench vessel (V301), in which the ash is quenched in water and from which the fluidising air is vented.

A 15mm restrictor orifice located in the conveying vessel outlet controls the maximum rate of ash discharge.

The downlegs, ash conveying vessel and the transfer line are all refractory lined.

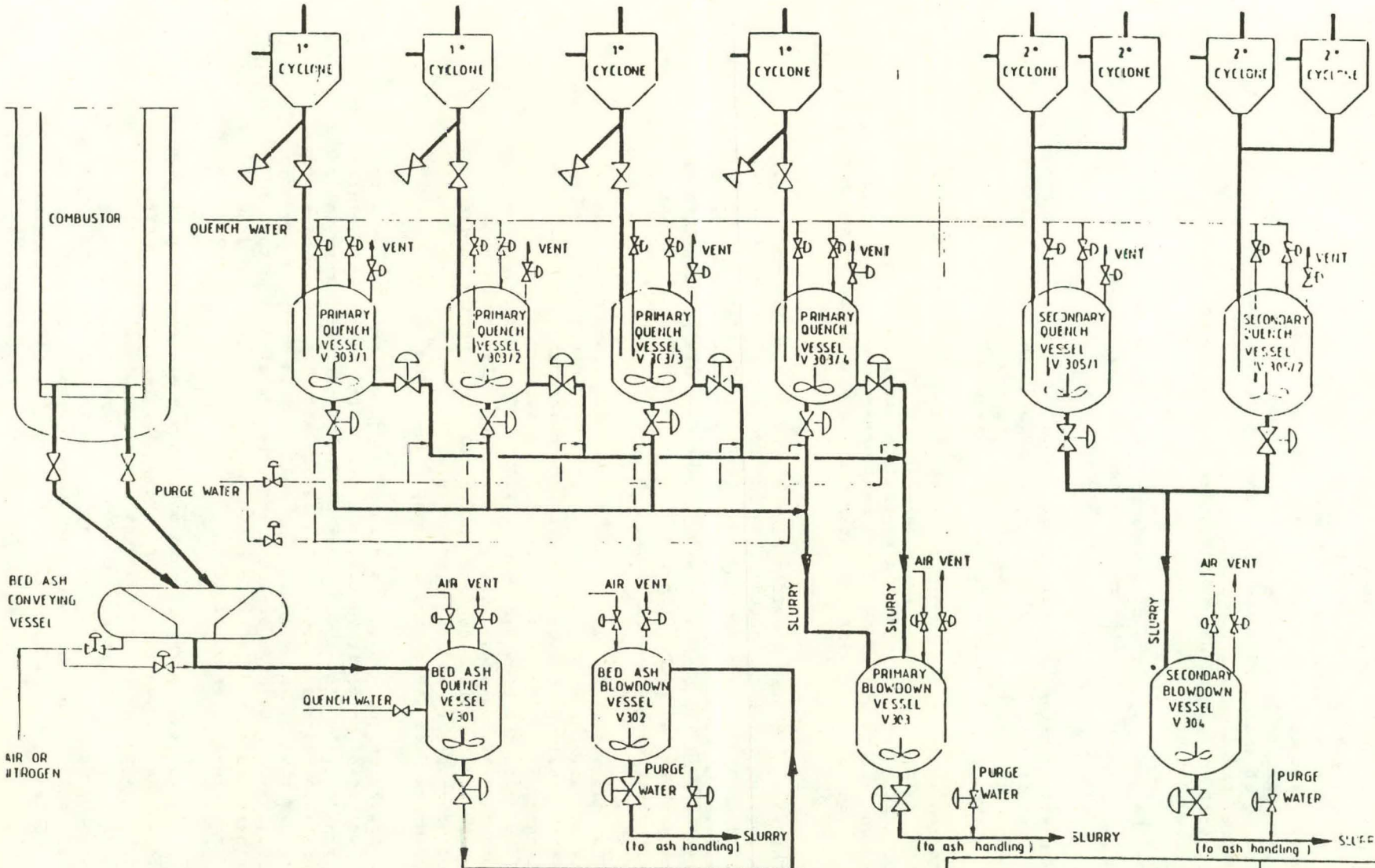


NCB (IEA Grimethorpe) Limited
Grimethorpe Nr Barnsley
South Yorkshire S72 7AB

IEA COAL GRIMETHORPE

ASH QUENCH AND DEPRESSURISATION SYSTEMS

FIGURE 16

Discharge of ash is effected intermittently. When the fluidised bed in the combustor reaches a pre-set high level, an air/nitrogen control valve is caused to open, admitting fluidising air into the lower compartment of the ash conveying vessel and ash is discharged to the quench vessel. The combustor bed level falls until it reaches a pre-determined low level when this valve shuts and ash flow ceases. At this point, the flow of fluidising air is re-routed through another control valve into the ash transfer line to clear it of residual ash.

In the event that the combustor bed level falls below the normal low level control point reaching the "extra low level", the Kamyr valve in operation is caused to shut.

The ash transfer line enters the top of the quench vessel and continues down inside the vessel to form a dip pipe terminating below the surface of the water, ensuring that the hot ash is quenched immediately on entering the vessel.

Quench water is fed into the vessel through two separate inlets. In one inlet a control valve regulates a continuous flow of water at a pre-set rate. A separate control valve in the second inlet line allows additional water to enter the vessel as required to prevent the water temperature in the vessel rising above 120°C.

The vessel is also provided with a pressurising air supply via a control valve and a vent line incorporating a control valve. Both control valves operate as required to maintain the pressure within the quench vessel at 0.7 bar (adjustable) below the pressure in the combustor at distributor plate level. This control system automatically compensates for the fluidising air entering the vessel during ash discharge.

The ash is kept in suspension in the water (forming a slurry) by an agitator which is kept in continuous operation. Periodically, the slurry is discharged through a control valve located centrally in the bottom of the vessel, via a pipeline leading to the blowdown vessel (V302). The latter is also provided with a pressurising air control valve and a vent control valve which operate to control the pressure in the blowdown vessel at 2 bar (adjustable) below the quench vessel pressure when the slurry is being transferred.

As water is fed continuously into the quench vessel, the water level rises until it reaches a pre-set high level, when slurry transfer valve is caused to open. The water level then falls until it reaches a pre-set low level, at which point the slurry transfer valve shuts again. As soon as this valve is proved shut, a flow of high pressure water is admitted into the slurry transfer line via a control valve to purge the line for a pre-set period of time.

As soon as this purge is completed, the pressure in the blowdown vessel is reduced to a lower level sufficient to discharge the contents to the water treatment plant - nominally pre-set at 2 bar (g) but adjustable to suit requirements. When this pressure is reached, the slurry discharge control valve (located centrally in the bottom of the vessel) opens. However, as the temperature of the slurry discharged to the water treatment

plant must not exceed 60°C, a slug of cold water is injected into the transfer line via a control valve ahead of the slurry and then continues during the slurry discharge to maintain the temperature below this value.

When the level within the blowdown vessel falls to actuate the low level control element, the slurry control valve and water valve both shut. Low pressure purge water is then admitted via a control valve to flush the transfer line for a pre-set period of time. At the same time, the blowdown vessel is re-pressurised ready to receive the next batch of slurry from the ash quench vessel.

All the control valves are operated automatically in sequence through a logic unit.

### 5.4.3 Primary Cyclones Fines Quench and Blowdown

A downleg connects the base of each primary cyclone (V314/1, 2, 3 and 4) to its own quench vessel (V303/1, 2, 3 and 4,), the downleg being continued through the roof of its quench vessel to form a dip pipe terminating below the surface of the water contained in the vessel.

The following description applies to cyclone V314/1 and quench vessel V303/1 and their respective control valves but the other three cyclones and quench vessels operate in the same manner.

The hot solids separating from the main gas stream are carried through the downleg into the quench vessel by a controlled flow of gas, the solids being trapped in the water and the gas being vented to atmosphere via a control valve.

The actual gas flow is measured by means of a flow element located in the vent line and the control valve is actuated through a flow controller to maintain a pre-set flow rate calculated at 1% of the main flow of gas through the cyclone. The flow controller automatically adjusts for system pressure.

Quench water is fed into the vessel through two separate inlets. One control valve feeds a continuous supply of water at a pre-set rate, the other control valve allows additional water to enter the quench vessel as required to prevent the water temperature in the vessel rising above 120°C.

The quench vessel is provided with an agitator operating continuously to keep the solids in suspension in the form of a slurry. This agitator, being inclined to the vertical, has a bearing at the bottom of the shaft. A hand regulated supply of clean water is connected directly to this bearing, to ensure that it is not damaged by the entry of solid particles.

The slurry can be discharged from the vessel through either one of two outlets. A control valve (normally in use) is connected to the side of the vessel near the bottom. A dump control valve is mounted centrally at the base of the vessel. This is used periodically to clear solids which are too heavy to be kept in suspension by the agitator. The controls can be set so that the dump route is operated automatically either every other cycle or once every "x" cycles, "x" being variable from 1 to 998.

The normal slurry outlet connections from all four quench vessels join a common main leading to a single blowdown vessel (V304). A completely separate main connects the four dump control valves to the blowdown vessel. Both of these slurry transfer mains are provided with rodding points for use in the event of blockage.

The blowdown vessel itself has a pressure control system in which a control valve regulates the supply of pressurising air to the vessel and another control valve regulates the venting of air from the vessel to atmosphere.

The slurry outlet is located centrally in the base of the vessel where a control valve is located. The pressure control system maintains the pressure in the vessel at 2 bar lower than the exhaust gas system pressure during transfer of slurry from the quench vessels and then reduces it to 2 bar gauge for discharge from the blowdown vessel to the water treatment plant.

The transfer of slurry is initiated when the continuous supply of water to the quench vessels causes the slurry levels to rise in the quench vessels. When the level reaches a pre-determined high level in any one of the four quench vessels, all four slurry outlet valves open and slurry is transferred into the blowdown vessel under the driving force of the 2 bar differential pressure.

When the level in each quench vessel reaches its pre-determined low level, its corresponding slurry valve shuts again. As soon as all four slurry valves are shut, the slurry transfer line is automatically flushed through with high pressure water for a pre-set period of time.

The high pressure water supply line is provided with pressure wave dampers to prevent water hammer which could be caused by the operation of the purge control valve.

As soon as the purge water control valve has shut, the pressure in the blowdown vessel is reduced to 2 bar (g) and when this pressure is reached, its slurry discharge valve opens to discharge the contents to the water treatment plant. However, as the temperature of the slurry entering the water treatment plant must not exceed 60°C, a slug of cold water is injected into the transfer line ahead of the slurry via a control valve and this water injection continues during the transfer of slurry as required to maintain the temperature below this value.

When the level of slurry in the blowdown vessel reaches a pre-determined low level, the slurry discharge valve and the cooling water valve shuts, at which time a low pressure water purge is injected into the transfer line for a pre-set period of time via a control valve.

The shutting of the slurry discharge valve also initiates the re-pressurising of the blowdown vessel ready to receive the next batch of slurry from the quench vessels.

All the control valves are operated automatically in sequence through a logic unit.

### 5.4.4 Secondary Fines Quench and Blowdown

The quench and blowdown system for the solid fines removed in secondary cyclones V315/1, 2, 3 and 4 is similar to the primary system described in 5.4.3, with the following exceptions:-

1. Quench vessel V305/1 serves two cyclones V315/1 & 2 and quench vessel V305/2 serves cyclones V315/3 & 4. Each quench vessel therefore has two dip pipes.

2. The downlegs from the cyclones are not provided with cooled disengagement vessels or diverter valves for sampling.

3. Each quench vessel has only one slurry outlet, located centrally at the base of the vessel, because only fine solids will be handled in this system, the coarser solids having already been removed in the primary system.

As with the primary system, the slurry outlets from the quench vessels are connected to a single main leading to blowdown vessel V306, which in turn operates in a similar manner to blowdown vessels V302 and V304.

The sequence of operations closely follows that in the primary system, being controlled through a separate logic unit.

# 6. TURBO-COMPRESSOR

Contractor - Compair (Industrial) Ltd.
Contract Reference No. YCE 24/7827
Date Let - 30th September, 1976

## 6.1 General Description

The compressor contract provides for the design, supply and installation of the primary turbo-compressor to supply the pressurised air to the combustor. During normal operation the turbo-compressor will be powered from the facility's own steam generation, but during start up will take steam from the power station steam range. The turbine and the compressor are described separately. Additionally, the contract is to provide the condenser plant.

## 6.2 The Air Compressor

The air compressor is to operate at a maximum design rating of 31kg/s (68.2lbs/s) of dry air at between 6 and 12 bar (87 - 174 psia) pressure with a maximum possible turn down ratio, and must deliver without surge. The compressor design for this duty conforms to the requirements of API standard 617 and consists of a 3 stage low pressure centrifugal compressor delivery at 3.193 bar abs (46.299 psia), via an inter-cooler to a 4 stage high pressure compressor. The two compressors are linked through a gearbox providing L.P. to H.P. shaft speed ratio at 100% rotation of 5093/8753 rpm. The performance characteristics for the coupled system is given in figs. 17 - 20. Additional air pressure for fuel injection is provided from a booster compressor operating at 25,000 rpm delivering 2.7kg/s (5.94lbs/s) at PΔ2.1 bar (30.5 psia) as compared with the H.P. compressor discharge and is driven by an expander powered via a take-off from the L.P. compressor discharge and returned to inlet via an intercooler. The booster compressor has a pre-cooler, an after cooler and a drier thus delivering air to the dense phase fuel injection system at 35°C (95°F) and at a dew point of - 10°C (14°F).

Speed control on the booster system is achieved by valve throttling of the expander inlet.

Air to the L.P. compressor intake is extracted from outside the plant building through a filter and intake silencer. In the approach to the intake silencer there is provided sufficient length of straight duct to measure air mass flow to the maximum commercial accuracy, a Dall Tube is to be employed.

## 6.3 Turbine

The compressor is to be driven by a G.E.C. steam turbine, capable of variable speed operation supplied with steam at 28.0 bar (406 psia) pressure and 440°C (824°F). The design conforms to BS 132: 1965, and at full load takes a power requirement of 12.4MW (42.3 x $10^6$ Btu/h). The rotor is fabricated as an integral element accommodating a twelve blade set; and drives the L.P. compressor shaft via a synchro self shifting clutch.

The turbine is equipped with barring gear to facilitate starting, shutting down and maintenance. The casings of the turbine are such that the lifting of the upper casing fully exposes the rotor without disturbance.

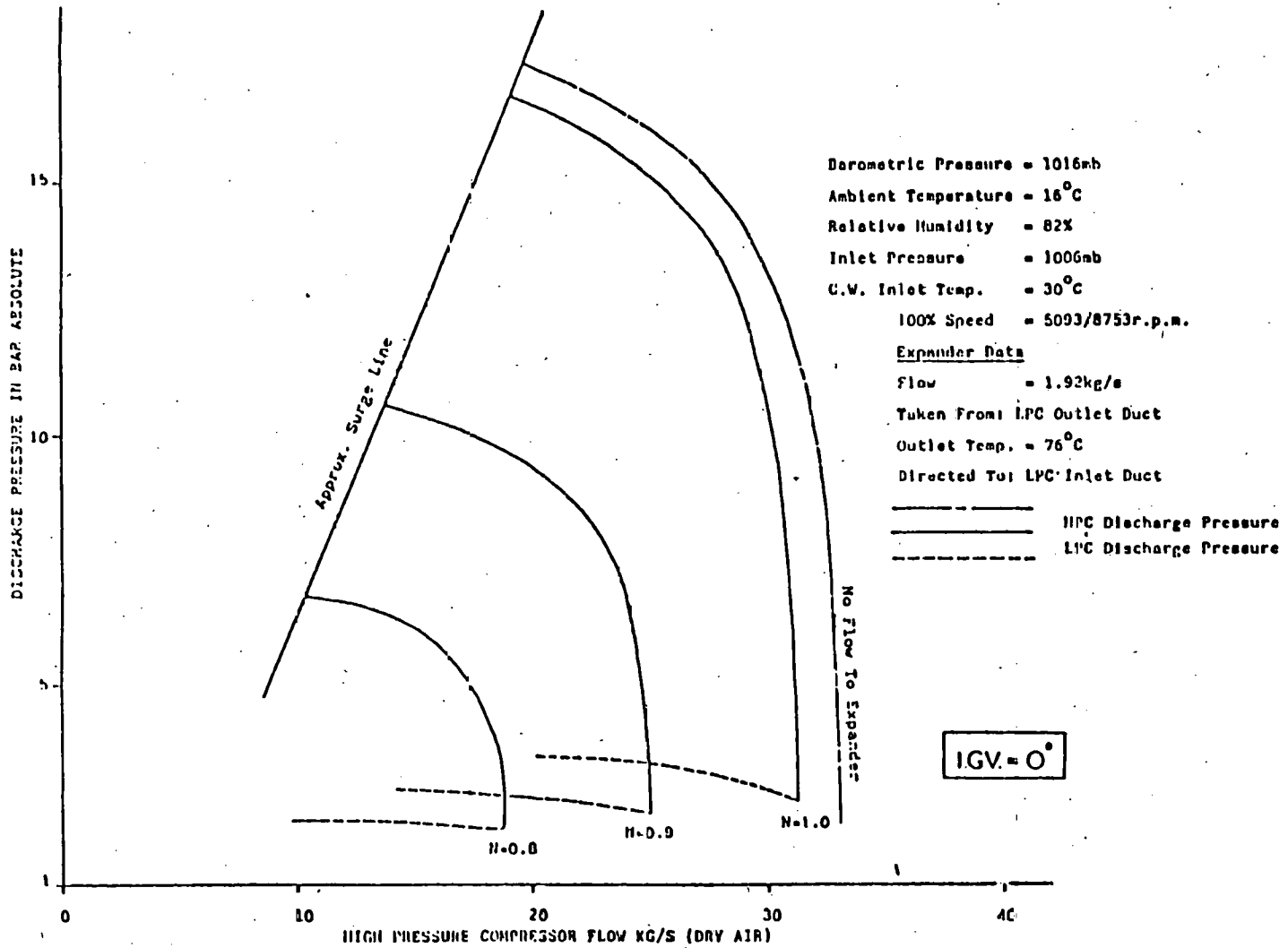


Figure 17
Approximate Performance of Renvell
C1101 - 604 Air Compressor

NCB (IEA Grimethorpe) Ltd.

Pressurised Fluidised Bed
Combustion Project
Grimethorpe Experimental Facility

Figure 17

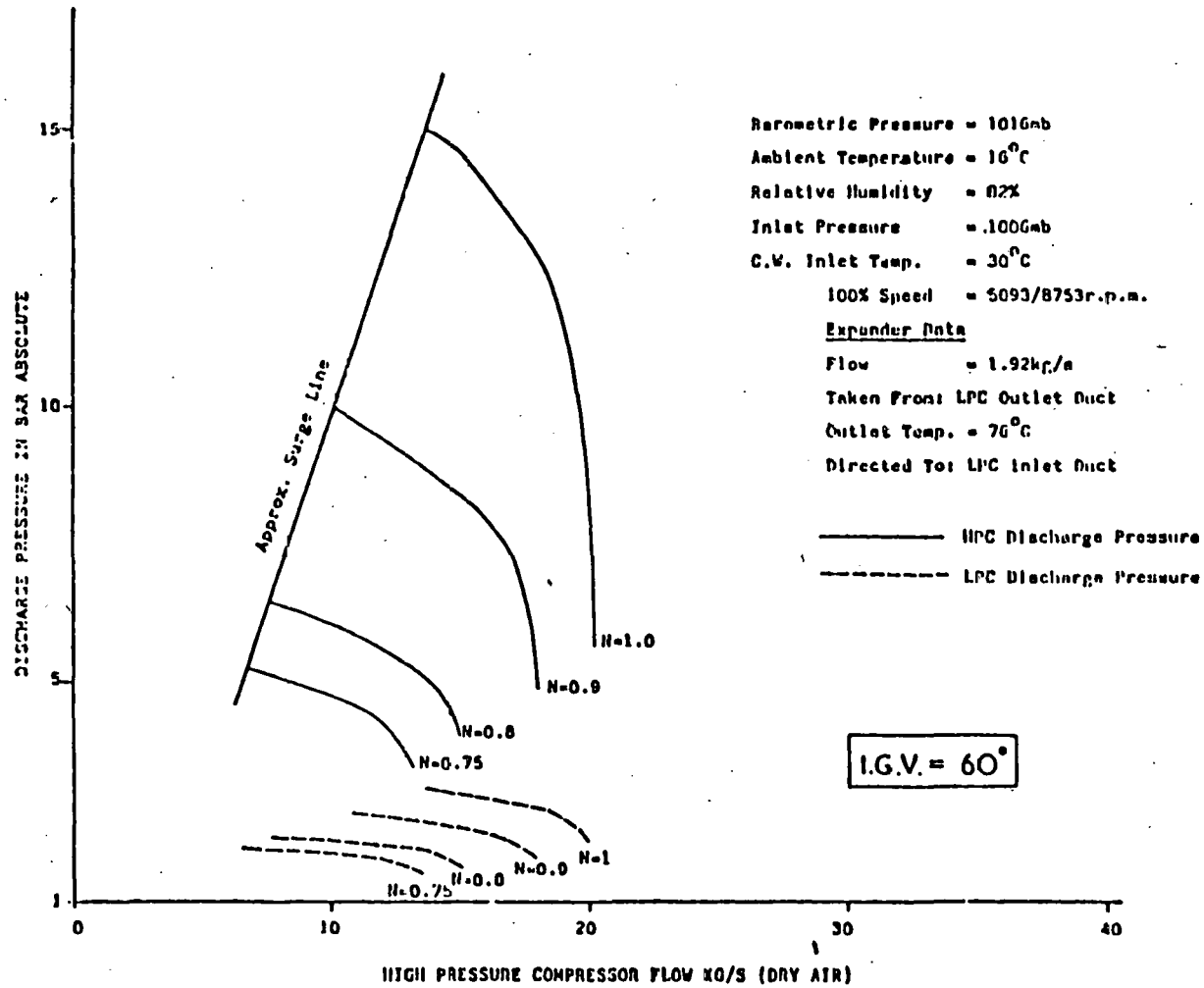


Figure 18
Approximate Performance of Renvell
C1103 - 604 Air Compressor

NCB (IEA Grimethorpe) Ltd.
Pressurised Fluidised Bed
Combustion Project
Grimethorpe Experimental Facility

Figure 18

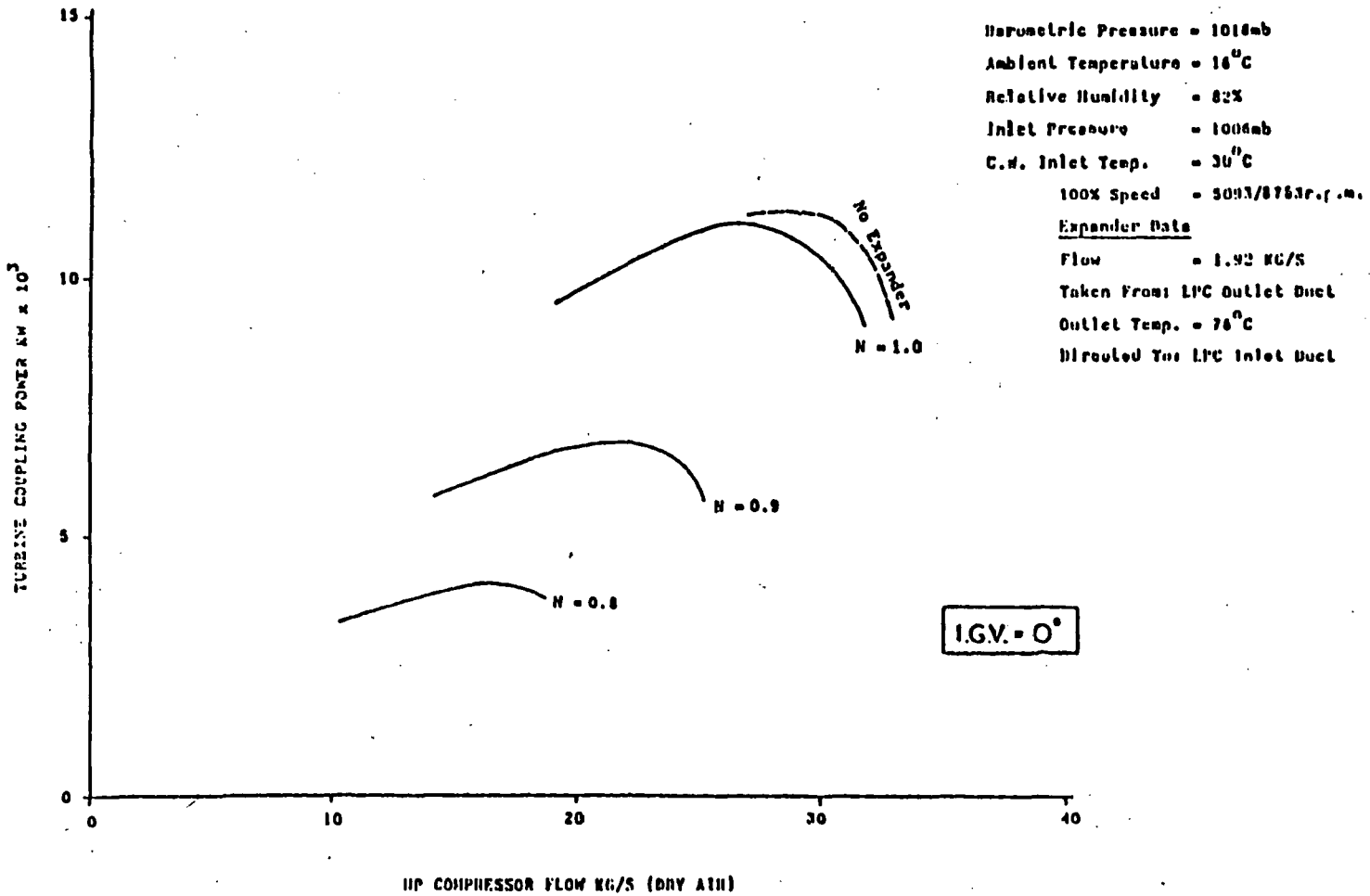


Figure 19
Approximate Performance of Roavoll
C1103 - 604 Air Compressor
Turbine Coupling Power at I.G.V. = 0°

NCB (IEA Grimethorpe) Ltd.
Pressurised Fluidised Bed
Combustion Project
Grimethorpe Experimental Facility

Figure 19

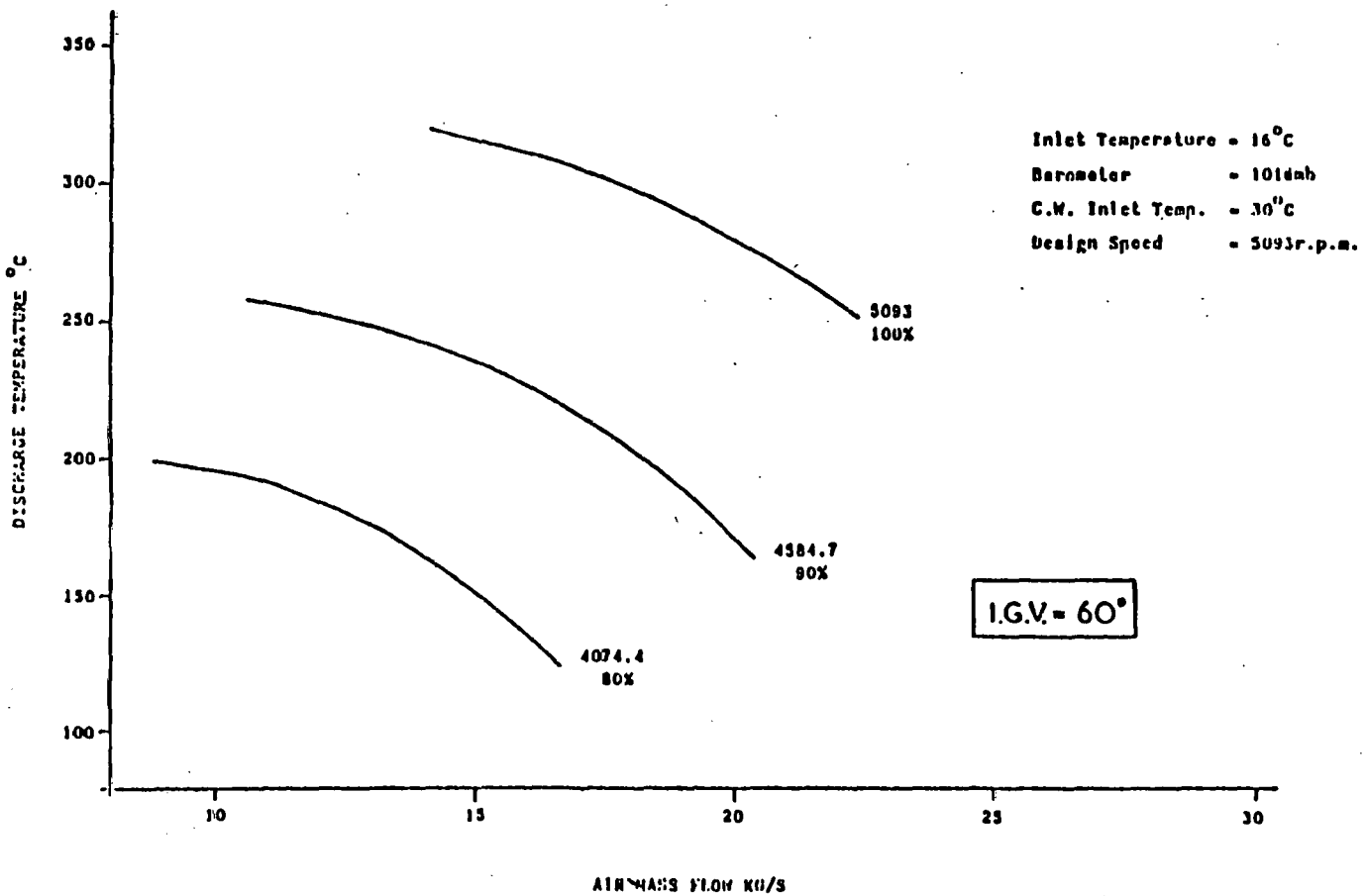


Figure 20
Approximate Performance of Renvell
C1103 - 604 Air Compressor
Discharge Temperature at Inlet 60°C and I.G.V. = 60°

NCB (IEA Grimethorpe) Ltd.
Pressurised Fluidised Bed
Combustion Project
Grimethorpe Experimental Facility

Figure 20

# 7. FUEL/BED MATERIAL FEED SYSTEM

Contract - Petrocarb Inc.
Contract Reference No. - YCE 24/8764
Date Let - 8th February, 1977.

## 7.1 General Description

The fuel/bed material feed system provides for the detailed design, and manufacture of the fuel injection system for the fluidised bed combustor. The fuel injection system serves to provide by dense phase pneumatic transport, the necessary rate of coal, or coal/dolomite mixture feed as required by the combustor demand. The system consists of a storage injector fed from a surge hopper supplied under the fuel preparation contract discharging on command into a primary injection vessel, connected by pipework and controlling valves to the fluidised bed distributor plate, where an arrangement of fuel feed nozzles permit an even distribution of fuel feed across the area of the fluidised bed.

Additional equipment in a similar manner, stores, injects and removes by dense phase pneumatic transport, inert bed material as demanded by the combustor.

Instrumentation and control is provided to measure the quantity of coal/dolomite delivered to the combustor and to provide control on such variable feed rates as required by operations, in addition to controlling fuel injection for safe operation. The fuel feed system is composed of five principle elements. They are:

1) storage pressurisation, 2) transport injector, 3) sample receiver, 4) nitrogen pressurisation supply, 5) transport air supply. The sections will be described under those headings, and a flow sheet of the system is included as figure 21.

## 7.2 Storage Injector

The Storage Injector is a conical vessel, supported on load cells, to facilitate the weighing of coal/dolomite batches.

## 7.3 Primary Injector

The Primary Injector is a cylindrical vessel terminated by domed ends carrying all pipework connections. The upper dome carries the principle feed nozzle flange connected via a gate valve to the storage injector, together with depressurising and vent pipe connections. The lower dome supports nine radially arranged venturi cones, activated by individual nitrogen injection circuits described below. This vessel is also supported upon load cells, to detect both the complete transfer of a coal/dolomite batch from the storage injector and the need for refilling.

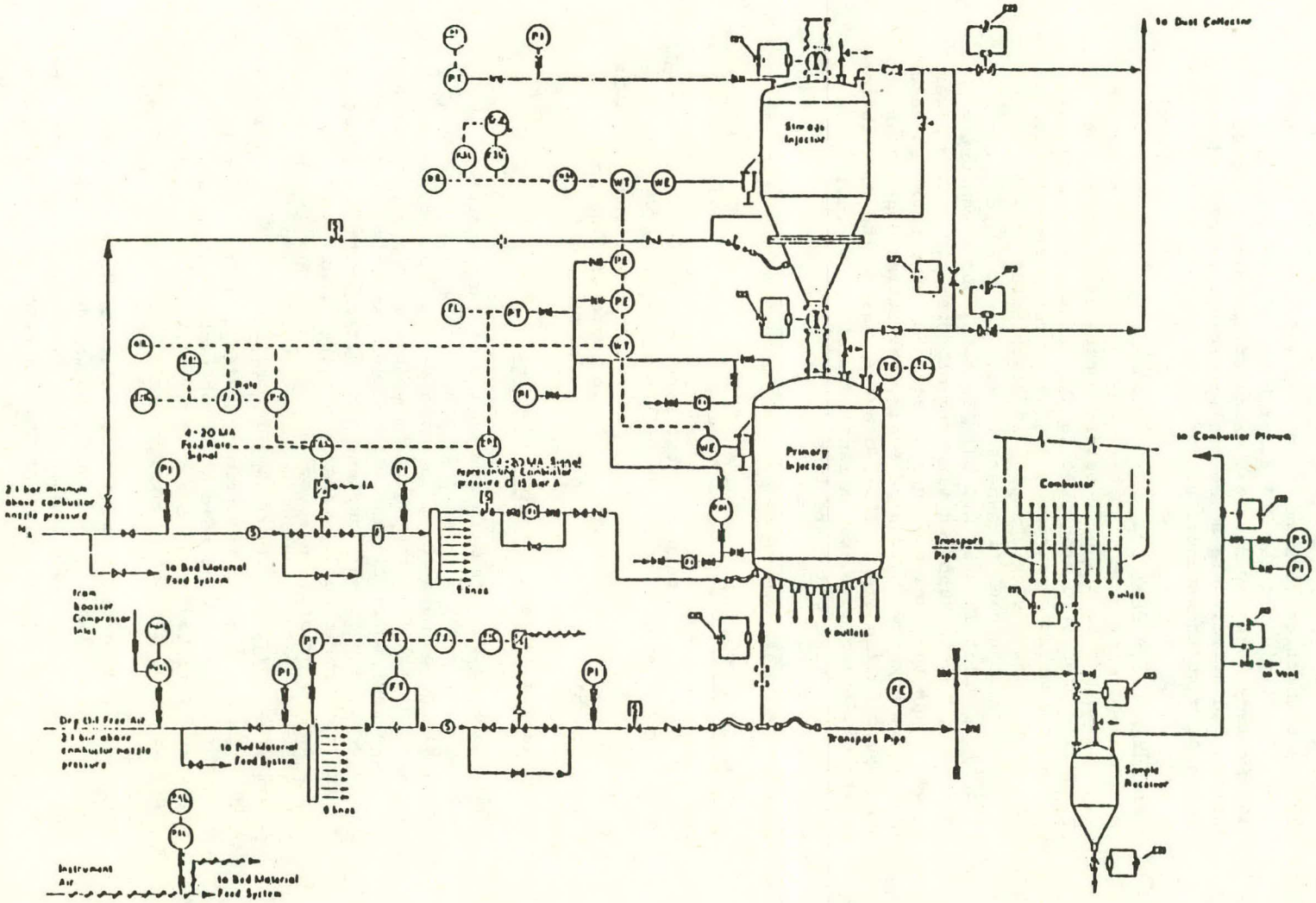


Figure 21
Petrocarb Fuel Feed System

NCB (IEA Grimethorpe) Ltd.
Pressurised Fluidised Bed
Combustion Project
Grimethorpe Experimental Facility

Figure 21

## 7.4 Sample Receiver

The sample receiver is a small cylindrical vessel with domed upper and conical lower ends, and is of sufficient size to accept a 5 kg (11 lbs) sample.

## 7.5 Nitrogen Pressurisation Supply

The nitrogen supply is at a line pressure 2.1 bar above combustor pressure. Suitable valve control is emplaced before connection to a manifold from which there are nine lines (whilst using the DPI distributor plate) running to the Primary Injector nozzles. Each of the nine lines is controlled by suitable automatic open/close valves before connection to these nozzles.

## 7.6 Transport Air Supply

The air supply from the booster compressor provides the principle pneumatic transport to the combustor fuel nozzles. It is of similar arrangement to the nitrogen pressurisation supply in that a single supply is distributed by a manifold to provide nine coal transport lines. The transport air supply is maintained at 2.1 bar (30 psia) above combustor pressure, and is supplied with dry oil free air. At a mixer 'tee' piece the fuel/nitrogen phase from the primary injector nozzle is mixed with transport air, permitting dense phase transport in the nine fuel transport pipes to the distributor plate coal feed nozzles. A sample receiver is provided on each of the nine transport lines.

## 7.7 Bed Material Feeder

This consists of a separate but essentially identical system allowing the supply or withdrawal of any designated bed material to or from the bed at pressures in the range 6-12 bar (82-174 psia) at the fixed controlled rate of 2000 kg/h (4410 lbs/h).

## 7.8 Operation of the Fuel Injection System

Coal/dolomite fuel is supplied to the storage injector, the filling time being less than 12 mins. Automatic control is available to command the recharging system. At initiation the system will fill and when the weight strain gauge reaches the upper set point filling will cease. At this point the storage injector is pressurised with nitrogen to the pressure of the primary injector, thus permitting transfer of a coal batch to the primary injector.

Complete transfer is sensed by the primary injector weight strain gauge. Should the primary injector not be able to accept a batch, the storage injector remains at atmospheric pressure after having been refilled. All batch transfers are tallied on a batch counter.

The fuel feed to the combustor is initiated in each of the fuel transport lines in sequence, in any desired order until the required number and sequence are feeding. Taking one line as an example, the nitrogen primary injector pressurising line

is opened as is an orifice controlled primary injector vent valve. The air transport line is also opened allowing free flow of dilution air to the combustor fuel feed nozzles. Control arrangements permit pressurisation of the primary injector to a differential set point as compared with the combustor pressure.

When this situation has been established, valves can be opened to permit the flow of fuel from the primary injection nozzles to the mixer 'tee' piece, and thence transportation of the fuel to the distributor plate feed nozzles. The solids feed and pneumatic flow rates can be set to either a weight rate or temperature control. Each fuel transport line may be sampled, but only one at a time. The sample receiver takes the sample from before the combustor shut-off valve.

# 8. INSTRUMENTATION AND CONTROL

Contractor - Babcock Bristol Ltd.
Contract Reference No. - YCE 24/7870
Date Let - 7th September, 1977

## 8.1 Introduction

The contract for the instrumentation and control provides for the design and supply of all necessary equipment for the process control of start up, operation and routine shut down of the plant in a safe and orderly manner. In addition, the control system will allow manual override of those control loops controlling the primary operating parameters. The control system has a hard wired interlock scheme, which independantly monitors certain critical plant parameters either preventing certain operations or shutting down the fuel injection systems. This allows the Turbo Compressor to maintain air flow, but ensuring rapid cooling of the bed. The basic philosophy was that the Experimental Facility should be capable of complete control, either remote manual or automatic from a central Control Room situated at the west end of the Main Plant Building. Thus the Babcock Bristol contract also involved the incorporation, including the resolution of interface problems, of significant areas of control equipment included within other contracts. The three main areas were the Fuel and Bed Material Feeding Systems where the control system was by Kent Instruments as a sub-contractor to Petrocarb Inc., the Ash Quench and Pressure Let-Down System where the control system was provided by Taylor Instruments as a sub-contractor to Head Wrightson and the Main Turbo-Compressor and the Booster compressor where comprehensive local controls were provided by Compair/GEC and Cryostar respectively, with only local indication and, in the case of the Main Turbo-Compressor, limited remote speed control being provided in the central Control Room. In addition, the control system for the Steam/Water Circuit was designed jointly by NCB (IEAG) and the contractor V.K.W. with Babcock Bristol procuring and installing the bulk of the equipment.

## 8.2 General Description of the Process Control Instrumentation

### 8.2.1 Process Air Mass Flow

The master air flow measurement is made in the inlet ductwork to the Turbo Compressor. After the Turbo Compressor, the air flow splits, the main stream passes through a non-return valve, another flow measuring device and a flow regulating valve to the top of the combustor pressure shell. A second stream passes to the Booster Compressor which raises the pressure another 2.1 bar above the Turbo Compressor outlet pressure. After the Booster Compressor, this stream passes through a drier, a control valve, a non-return valve and a flow measuring device before dividing to the various pneumatic transport systems.

The inlet air flow measuring device is a Dall tube type where the process air device is an orifice plate and the conveying air device is a flow nozzle. All three flow measurements are corrected for temperature and pressure variations.

### 8.2.2 Process Pressures

A comprehensive set of pressure measurements are taken:-

Tubron Compressor outlet
Inlet to the Pressure Shell
In the furnace just above the Distributor Plate
In the freeboard space above the Fluidised Bed
After the Primary Cyclones
After the Secondary Cyclones
After the Main Heat Exchanger
Between Pressure Control Valves and the chimney
Booster Compressor Outlet

Additionally, a set of differential pressure measurements are made:-

Across the Distributor Plate
Across the lower 190mm run of the furnace, DP1
Across the next 1040mm of the furnace, DP2
Across the next 4355mm of the furnace, DP3
Across the Freeboard Cooler
Across the Primary Cyclones one at a time by means of a selector switch
Across the refractory lined furnace exit hood between the furnace and the air space within the pressure shell

All pressure measurements within the furnace are indicated as the average of the readings of three nitrogen purged pressure probes with automatic reflection of erroneous readings. The measurements DP1, DP2 and DP3 allow the continuous calculation and indication of the depth of the fluidised bed. The furnace exit hood is considered to be the weakest part of the furnace containment and the pressure drop across it is used in the Safety Interlock System.

### 8.2.3 Process Temperature

Gas temperatures are measured:-

At Turbo Compressor inlet
At Turbo Compressor outlet
At inlet to the combustor pressure shell
In the fluidised bed (see below)
At primary cyclone inlet
At secondary cyclone inlet
At main heat exchanger inlet
At main heat exchanger outlet
At entry to the chimney

The temperature distribution within the fluidised bed is of major importance both for control purposes and as an experimental variable. In the first build of the Experimental Facility, the lowest 990mm of the furnace is empty with the next 2535mm being occupied by Tube Bank A. Thus when operating at datum conditions, the fluidised bed is approximately 3500mm deep.

Eighteen thermocouples are distributed through the lower 600mm of the fluidised bed. They penetrate the distributor plate vertically,

four to a height of 590mm, four to 290mm, and ten to 340mm. These thermocouples are important for the temperature control of the fluidised bed, particularly during start up when the fluidised bed is relatively shallow.

Sixteen thermocouples are distributed through the volume of the furnace occupied by Tube Bank A. Their location is presented in Table 6. There are no thermocouples through the North and South water walls and those through the West and East walls penetrate 450mm, lying horizontal between the vertical serpentines of the tube bank. These thermocouples are of prime importance to the experimentation, and temperature control of the fluidised bed. Any selection of them can be averaged and used as the signal for the automatic control of the fuel feed system.

### 8.2.4 Flue Gas Composition

The $O_2$, $CO_2$, CO, $SO_2$ and NOx content of the flue gas is measured at a point between the two sets of cyclones, a point chosen to minimise the dust loading on the sample conditioning system without being so far from the fluidised bed as to impose unacceptably long response time. Samples are taken from each duct. A pressure reducing valve at the probe lowers the pressure to one bar. There then follows duplex filtering stage, water cooler and secondary pressure reduction to 500 mB before the sample is mixed and a single sample stream is taken to the analyser cubicle.

Within the analyser enclosures, further filtering and flow regulation conditions the gas before entering the analyser.

The measuring principle of the analysers measuring CO, $CO_2$, $SO_2$ and NOx makes use of the specific radiation absorption of heteroatomic gases in the spectral range of the mean infra red between 2.5μm and 12μm wave lengths. The absorption is measured in an alternating light photometer arrangement with 2 parallel beams and a selectively acting radiation receiver. The sample gas is passed through the sample cell, the reference cell contains nitrogen and absorbs no radiation. The emitted radiant energy is split up into two beams and upon passing through the sample cell and the reference cell, it enters the two defector chambers. The incident radiation is absorbed in the specific absorption bands of the receiver gas. The collision of molecules results in instant conversion of the absorbed energy into thermal energy. This energy is measured using a capacitance transducer.

The remaining analysers measure oxygen and are paramagnetic devices. The paramagnetism of the gases is inversely proportional to the temperature. The gas to be tested is contained in a thin wall glass tube in which a powerful permanent magnet produces a strong magnetic field. If consequently the magnetic field tries to pull primarily th e cold gas towards points of maximum field strength, resulting in the gas heated by the heating wire being pushed away from the field. Since the colder gas which follows is heated continuously by the heating wire, a steady flow is produced which is referred to as "magnetic wind" and whose rate of flow is proportional to the oxygen content of the sample gas.

TABLE 6 LOCATION OF THERMOCOUPLES

MEASURING BED TEMPERATURES WITHIN TUBE BANK 'A'

| THERMOCOUPLE NUMBER | WALL PENETRATED | DISTANCE FROM NORTH WALL, m | HEIGHT ABOVE DISTRIBUTOR ORIFICES, m |
|---|---|---|---|
| 10 | W | 1.798 | 3.240 |
| 11 | W | 0.364 | 3.240 |
| 1 | E | 1.838 | 3.160 |
| 2 | E | 0.424 | 3.160 |
| 12 | W | 1.869 | 2.195 |
| 13 | W | 0.798 | 2.195 |
| 3 | E | 1.828 | 2.120 |
| 4 | E | 0.374 | 2.120 |
| 15 | W | 0.899 | 1.535 |
| 14 | W | 1.616 | 1.460 |
| 17 | W | 0.556 | 1.155 |
| 6 | E | 0.869 | 1.145 |
| 7 | E | 0.131 | 1.145 |
| 16 | W | 1.323 | 1.080 |
| 18 | W | 0.162 | 1.080 |
| 5 | E | 1.616 | 1.080 |

### 8.2.5 Steam/Water Circuit

As described in Section 4, the steam/water circuit consists of seven separate circuits:-

Heat Exchanger Water Walls
Heat Exchanger Economiser
Combustor Water Walls
Combustor Evaporator
Heat Exchanger Evaporator
Freeboard Cooler
Heat Exchanger Superheater

Flow, temperature and pressure of the boiler feed water is measured at the Boiler Feed Pump outlet and thereafter the temperature and pressure of the water/steam is measured before and after each circuit. Where the flow splits between the two evaporator circuits, the flow to each circuit is individually measured. This instrumentation allows a heat balance to be calculated for each individual circuit as well as a gross balance for the whole boiler.

## 8.3 Computer Control

### 8.3.1 Micro B Micro Processor

The Micro B is a Process Control System that performs operations through the use of digital programming techniques. Selective data is inputed to the computer where software actions determine error values and characterise for Gain, Integral and Derivative modes to produce calculated controller outputs. The outputs are fed as analogue signals to either Process Valves, or they may be cascaded to conventional Set Point Controllers.

At Grimethorpe, the Micro B provides automatic control of Air Mass Flow, System Pressure, Bed Temperature and Bed Level. The latter two Micro B outputs being cascaded to Fuel Injection and Ash Removal Systems respectively. The requirements and capabilities of the control system are summarised in Figure 22.

#### 8.3.1.1 Air Mass Flow Control

Start Up

During start up, desired air flow is calculated from measured Bed Temperature Freeboard Pressure and appropriate X and Y values. The controller adjusts the Flow Regulating Valve to achieve this desired flow. In this mode, the system pressure control valve selected to Micro B control, if selected to automatic, will be positioned to achieve a desired pressure set at the supervisor's desk. Initially, constants X1 and Y1 are employed, but when Bed Temperature exceeds Bed Limit 1, and the Propane off signal is received, change over to steady state constant X2 and Y2 occurs. The valves X2 and Y2 used in the calculation are adjusted slowly to the steady state valves.

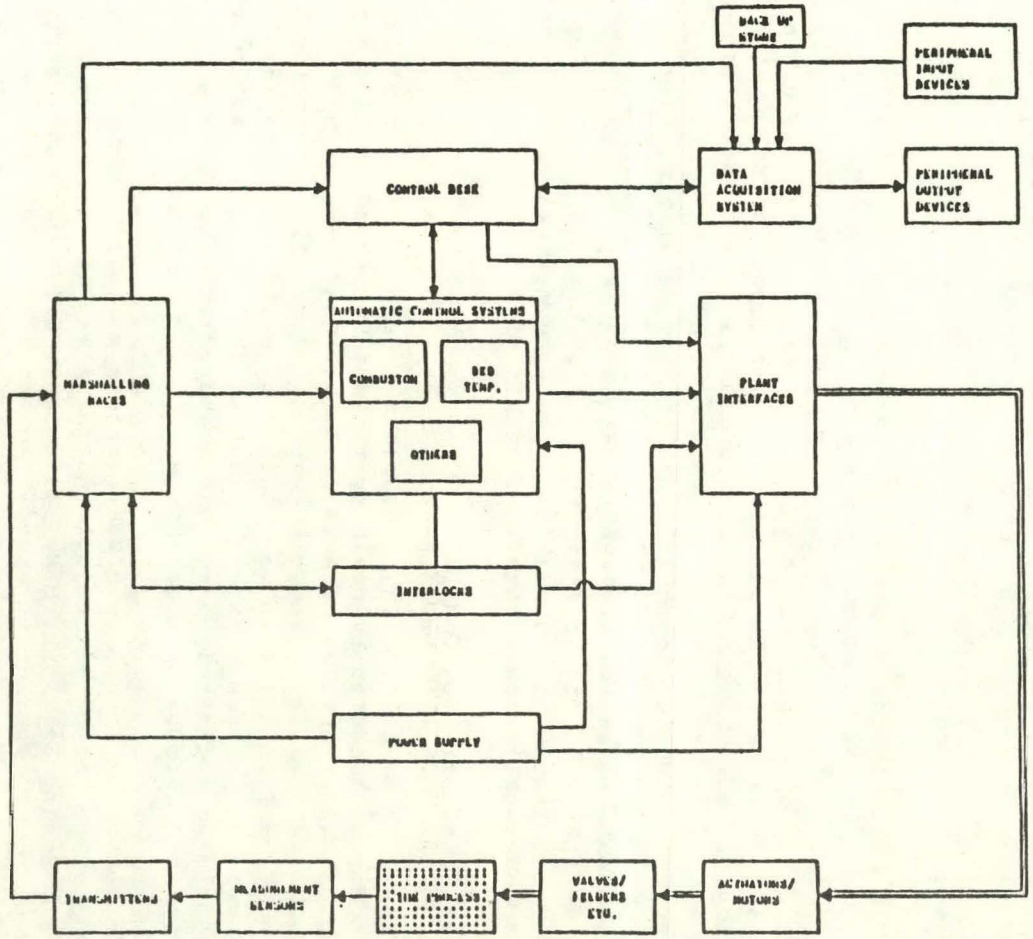


Figure 22
Instrumentation and Control
Logic Diagram

NCB (IEA Grimethorpe) Ltd.
Pressurised Fluidised Bed
Combustion Project
Grimethorpe Experimental Facility

Figure 22

Change-over to Oxygen Trim mode

As the coal injection rate increases, the excess oxygen will fall and on reaching the entered limit 02 Limit 1, a message will be printed in the alarm area of the coloured Visual Display Unit. (S.U. complete C.O.), and the start-up complete change over key will flash. This enables the controller to select the Oxygen Trim Mode by pressing this key. The key will cease to flash and the start-up complete key will illuminate. Before doing this, the controller should ensure that the set point mode select key is not illuminated and that the Oxygen Set Point is sufficiently close to the measured Oxygen, so as not to cause a trip to manual. Should the Oxygen exceed 02L1M1, the controller may elect to return to the start-up mode by a similar procedure.

Oxygen Trim Control

This mode of control attempts to make excess oxygen match the oxygen set point by adjusting the air flow. It acts initially via the Flow Regulating Valve Control. When this is fully open, control of air flow is passed via the Turbine Governor Valve to the compressor. A cascade control system is employed. Oxygen Set Point and Oxygen are compared in the first controller to compute a desired air flow for the second controller which adjusts the Flow Regulating Valve.

This cascade system has the advantage in that it reacts immediately to disturbances in air flow without waiting for the resultant disturbance in Oxygen, the measurement of which is inherently slower than that of air flow.

Set Point Air Flow Control

This mode of control is available when start-up is complete. It may be selected by pressing the set point mode select key, which will then flash the verify key. Confirmation by pressing the verify key will then allow air flow control via the Flow Regulating Valve. Set point selection is on the Supervisor's desk. Before selecting this mode, the set point should approximately match the measured air flow to avoid a trip to manual on mode change.

To return to Oxygen Trim Mode, ensure a small 02 error by adjusting the 02 Set Point, and de-select Air Flow Control by pressing Set Point Mode select key followed by the verify key.

Control of Turbine Governor Valve

While the Flow Regulating Valve is controlling air flow, the Turbine Governor Valve on the steam turbine driving the air compressor is being positioned to maintain the pressure upstream of the Flow Regulating Valve to the Set Point Pressure.

However, when the Flow Regulating Valve is fully open, either in the Oxygen Trim or Set Point mode, control of air flow will pass to the Compressor and will remain in this configuration until the Flow Regulating Valve is selected to manual and lowered from the fully open position.

8.3.1.2 System Pressure Control

The Pressure Control Valve selected to Micro B Automatic Control is positioned to achieve desired system pressure. This mode of control is effective until the Flow Regulating Valve is fully open. At this point, the manual set point is replaced by the desired pressure calculated from Air Flow, Bed Temperature, X2 and Y2.

8.3.1.3 Bed Temperature Control

Thermocouples placed at various locations within the Bed provide the Raw Data for Temperature Control. The Micro B selects, verifies and averages the data before comparing it with Bed Temperature Set Point selected from the Supervisor's Desk. Any error value from the software controller is outputed as an analogue signal to the Set Point of a Pressure Differential Controller governing the amount of fuel injected into the Combustor.

If a large difference between Bed Temperature Set Point and measured valve occurs, the output is held at the last value before the error occured, and a discrepancy warning is illuminated.

During automatic control, should low oxygen or high combustibles be detected in the exhaust gases, control is suspended. This will last until the Bed Temperature falls to a pre-determined value. Another safety feature of the system, when selected to automatic, is the Automatic Ramp Down of Fuel should the Bed Temperature exceed a high limit. Automatic control is resumed when the temperature falls below this limit.

8.3.1.4 Bed Level Control

Raw data for the Bed Level Control System is a family of pressure sensing probes within the Bed. The Micro B uses the measured pressure differential values to calculate Bed Level, Bed Weight and Bed Density. The calculated Bed Level is compared against a Set Point Value selected from the Supervisor's Desk and the resultant error compared with preset Bed Level High and Bed Level Low limits. Comparator outputs produce digital signals to either initiate or stop Ash Removal.

Peripheral devices to the Micro B processor include one colour Visual Display Unit, one Black and White Visual Display Unit and one Keyboard. The Display Units provide the controller with a mimic of the control systems. The colour display unit is interactive with keyboard and processor, thus allowing the supervisor to input and obtain selected data. The black and white display unit provides updated plant and computer data values, pressure and temperature probe status and alarm displays.

## 8.3.2 Data Acquisition System

### 8.3.2.1 Introduction

The Grimethorpe Data Acquisition System is designed to monitor large quantities of process plant information accepted from plant in the form of analogue signals and digital status signals, and present the information in an easily assimilated form to research engineers and plant engineers.

The hardware components of the logger are:

- one D.E.C. PDP 11/34A Computer
- two D.E.C. Line Printers
- one D.E.C. TE16 Magnetic Tape Unit
- one D.E.C. RK05 Disk Unit
- one CALCOMB XY Plotter
- one D.E.C. Paper tape reader

The PDP 11/34A accepts data from two custom built Babcock Bristol Process Interface Units. The present system hardware is capable of handling:

- 360 Analogue Inputs and wired expansion to 432
- 144 Digital Inputs
- 32 Digital Outputs

### 8.3.2.2 General Description

The computerised,plant-site data acquisition system (DAS) has been set up to collect data from 250 plant process inputs and to calculate 30 additional process values. These data points processed by the DAS were selected on the basis that they were important for (1) process evaluation and (2) observation of plant operating characteristics. DAS data collected and processed are chiefly temperatures, pressures, differential pressures, gas composition, flow rates and levels; with a large portion of this data coming from the combustor section of the plant. Other data sources include the turbo compressor, primary and secondary cyclones, the three quench systems and the coal/dolomite feed injection system. The DAS provides adequate flexibility to document in the form of plotted graphs on printed tables chosen process variables during operation, to observe many of the important variables on a visual display unit (VDU) during operation, and to store complete sets of data collected during a run for later processing.

It is planned that the post run data manipulation will be performed by "COMPOWER", a separate computer system that will receive the data from DAS magnetic tapes.

### 8.3.2.3 DAS Storage

The DAS has two data storage facilities:

Magnetic Tape

The magnetic tape is a long-term permanent storage option.

All of the DAS data points (approximately 280) are stored on the tapes at 5 minute intervals. These points represent instant values from the plant. Although a single tape could hold up to three days of data, it is planned to store only one days data per tape in order to speed up the data processing procedure.

Disk

The disk storage is a short-term, easily retrievable storage option. Approximately 104 of the most important process data points are stored on the disk. These variables are scanned and recorded at one minute intervals, resulting in a disk capacity of approximately 24 hours. It should be noted that once the disk capacity is reached, the disk will continue to record data over "old" data, thus erasing the previous data. Data desired from the disk must, therefore, be recovered within approximately 24 hours.

8.3.2.4 Output Devices

Three output devices are available on the DAS; the visual display unit (VDU), the printer for data tabulation and the plotter for making desired graphs of any variable as a function of time.

VDU

The VDU will display in three modes:

a) Routine Logs - any of fifteen prescribed logs can be displayed by depressing an appropriate button on the operation console. These logs consist of current data points (updated approximately every 10 seconds) and comprise the following areas:

1. Ash Handling
2. General Information
3. Furnace Wall Metal Temperatures
4. Hood Temperatures
5. Distributor Plate Temperatures
6. Compressor
7. Exhaust Gas
8. Fuel and Bed Material
9. Combustor
10. Bed Temperatures
11. Combustor Tube Metal Temperatures
12. Air and Gas Flows
13. Gas Analysis
14. Steam Feed Water Circuit
15. Solids Feed System

b) Mimics - any of six prescribed images with appropriate data can be displayed in a similar manner as the routine logs. The mimics data is also updated approximately every 10 seconds and shows the following areas:

1. Combustor General Details
2. Furnace Water Wall Temperatures
3. Combustor Outer Skin Temperatures
4. Distributor Plate
5. Turbo-Compressor
6. Exhaust Gas Temperatures

c) Bar Graphs - any of the data from the disk storage can be displayed as a function of time. Although each graph covers a one hour time period, graphs can be displayed for previous time periods through the use of a "stepping-back" procedure.

Printer

The printer will tabulate any one of the process variables on the disk (at 1 minute intervals) through use of the engineer's console. In addition, current data from the mimics and routine logs can be printed by depressing the appropriate buttons on the operator's console.

The printer can also print data from the magnetic tape. However, because of (1) the time requirements for data retrieval from the magnetic tape and (2) the viability of the magnetic tape unit of record data while points are being retrieved and printed, this print option is not particularly desirable. Therefore, no plans are being made to record data during Test Series 1 from the magnetic tape with the DAS printer.

Plotter

The plotter will plot as a function of time, any one of the process variables on the disk. Normal time range (on the horizontal axis) is 8 hours, although the range can be reduced to 4 hours.

Provision has been made to allow for plotting of the previous 24 hours of data through three 8-hour time-length graphs.

8.3.2.5 DAS Usage During Test Series 1 Operation

Prior to Test Series 1, a determination will be made as to the desired data to be taken on a regular basis from the printer or plotting device. This data retrieval effort will be conducted by the Experimental Group engineers. Additional process data will be taken as the plant operation dictates on an as-needed basis. The data logged during an operational period will then provide the immediate process data for analysis.

8.3.2.6 Editing of the Magnetic Tapes

The magnetic tapes, containing instant values of the 280 DAS points at 5 minute intervals, will be sent to COMPOWER for editing and further processing. The data points are compared to a standards file, which contains high and low limits for each data point. Any value that falls outside the two limits will be placed in a rejection file which will be printed. This file will then be reviewed by Experimental Group engineers, and corrected as necessary to account for instrument errors, etc., through a teletype link with COMPOWER.

An edited file will then be compiled, printed and sent to NCB (IEAG). It is estimated that a minimum of 3 days will lapse between COMPOWER receipt of a magnetic tape and NCB (IEAG's)

## 8.4 Safety Interlocks System

### 8.4.1 Introduction

The combustor plant has a system of hardwired interlocks designed to safely shut down the plant or part of the plant when potentially hazardous conditions occur.

The plant hardwired interlocks can be split into two main groups. The main plant interlocks and local interlocks.

### 8.4.2 Main Plant Interlocks

These interlocks initiate the main plant interlock trip which is designed to shut down the combustor safely and protect the plant from any damage.

The basic principle is to stop the combustor firing by isolating the fuel feed whilst maintaining the fluidising air through the combustor. This prevents the bed in the combustor slumping causing damage to the distributor plate and removes heat from the system as quickly as possible.

Additionally, the steam/water circuit is put into a safe state, the propane burners are isolated and purged, and the plant is changed to manual control.

On activities on the main interlock, a lamp is illuminated on the main interlock trip panel to signify what has tripped the main interlock. However, this panel is remote from the main panels and there is no 'first up' panel system. To identify what has tripped the plant, a first up alarm display is available on the DAS panel.

The main interlock is reset by a key switch on the controller's panel.

#### 8.4.2.1 Actions Initiated by the Main Plant Interlock Trip

a. Isolates the fuel feed to the combustor by closing the quick shut off valves on the fuel feed lines. (Valves AV 8007/1-9).

b. Isolates the propane feed to the compartment burners by closing propane valves GP2318/1-9. The nitrogen purge is then opened to the compartments to purge the lines and the compartments.

c. Isolates the propane feed to the premix burners by closing propane valves GP 2306. The nitrogen purge is then opened to the burners to purge the lines and the burners.

d. In order to prevent cold liquid entering the superheater tubes when the combustor firing is suddenly tripped, the flow through the steam/water circuit is diverted via a by pass line immediately upstream of the superheater tubes directly to the start up vessel. This line, known as the 'Broecker' line is also used when the average combustor bed temperature is 500°C.

   The trip opens up the Broecker line valves HCV 5523 and PCV 5522.

e. If the system is exporting steam to the main power station steam header, in conjunction with action (d) above, the line from the combustor to the main steam header is isolated, that is valves HCV 5524 and HCV 5525 are shut.

f. The control of the system is switched from automatic control on the microprocessor, the Micro 'B', to hand control.

That is the Turbine speed control, the Flow Regulating Valve control and the back-end Pressure Control Valves are disconnected from the Micro 'B'.

8.4.2.2 Interlocks which initiate the Main Plant Interlock Trip

a. High steam temperature on the heat exchanger final outlet sensed by temperature element TS 5128 (setting to be 480°C).

b. High hydrocarbon level in the exhaust gas from the combustor as detected by analyser QA 3409. This is calibrated on propane and the trip is set at 5,000 p.p.m.

c. High exhaust gas temperature sensed by temperature elements TS 3131/3132/3133/3134 situated on the ductwork between the primary and secondary cyclones. Trip is set at 950°C.

d. High exhaust gas temperature sensed by temperature element TS 3114. Trip set at 400°C.

e. Failure of H.P. Quench Water sensed by pressure switches PS 3601/2/3. Trip set at 10 bar.

f. High differential pressure across the Combustor Waterwall sensed by PD 2026. Trip set at 1.0 bar.

g. Failure of boiler feedwater sensed by Flow Switch FS 5202 and Pressure Switch PS 5007. Flow Switch trip is set at 11kg/s and the pressure switch at 29 bar g.

h. Low level in the Deaerator sensed by LS. This is set at 1.45m or 15 minutes of boiler feedwater at maximum flow.

i. Trip of the Turbo-compressor.

j. Trip of the Booster-compressor.

k. Mains electric failure.

l. The operation of the emergency stop button in the control room.

m. Failure of the main combustor air flow sensed by FT 1204. Trip set at 4.0kg/sec.

n. Loss of pressure in the Instrument Air header sensed by PS 7005/6/7. The trip is set at 4 bar g.

### 8.4.3 Local Plant Interlocks

#### 8.4.3.1 Steam Quality Interlocks

When the Facility exports steam to the main power station steam range, the steam quality must be maintained within a specific range. There are, therefore, both low and high temperature and pressure interlocks on the export steam line at the outlet of the final superheater tubes from the heat exchanger.

These are:-

Steam Temperature High Interlock TAH 5128 trip set at 438°C
Steam Temperature Low Interlock TAL 5128 trip set at 400°C
Steam Pressure High Interlock PAH 5041 trip set at 30 bar
Steam Pressure Low Interlock PAZ 5041 trip set at 27 bar

When the trip is activated, the steam flow is switched from the main steam header into the start up vessel. The two steam export valves are shut, HCV 5524 and HCV 5525, the isolating valve HCV 5521 on the start up line is opened and the set point on the pressure controller PIC 5522 is restored. (When HCV 5521 is shut, PIC 5522 set point is ramped to zero and the valve PCV 5522 is fully opened).

The steam flow is, therefore, routed to the start up vessel with the pressure controlled by PCV 5522.

#### 8.4.3.2 Low Bed Temperature Interlock

This interlock is designed to isolate propane from the compartments if the bed temperature falls below the ignition temperature of propane. The trip is set at 500°C. Additionally, the steam/water circuit is routed via the Broecker line to the start up vessel. The premix burners remain alight.

There is a key switch to override this interlock for start up.

#### 8.4.3.3 Combustor Waterwall Interlock

A high pressure interlock is installed in the waterwall tubes of the combustor as it is possible to have a heated no flow section of pipe. This interlock is a high integrity trip in place of a relief valve relieving the pressure via the evaporator tubes.

If the waterwall pressure exceeds 80 bar as sensed by 2 of PS 5108A/B/C, a solenoid valve vents the actuator of valve TCV 5108, opening the valve fully and relieving the pressure via the remainder of the steam/water circuit.

## 8.5 Central Control Room

The Facility is operated from a Central Control Room adjacent to the Main Plant Building at the West end.

The layout of the Control Room is shown in Figure 23 It consists basically of five Unit Control Panels surrounding the Controller's Desk.

The Turbo-compressor is a locally controlled machine with a driver present at all times. However, all turbine/compressor process information is displayed in the Control Room on Unit Control Panel 1. Once the turbine has exceeded minimum governor speed, turbine speed and inlet guide vane position can be remotely adjusted from the Control Room.

The fuel feeding system and the start-up propane firing system for start-up can be completely controlled on remote manual from Unit Control Panel 2. Additionally, this panel can automatically control fuel feed rate according to a preset weight rate.

The steam/water circuit can be completely controlled, either on remote manual or on automatic, from Unit Control Panel 3.

The largest panel, Unit Control Panel 4, provides complete control, either remote manual or automatic, of the three ash extraction systems; bed ash, primary cyclone ash and secondary cyclone ash. This panel also provides indications of the temperatures and pressures throughout the exhaust gas system and indication of the flue gas composition at a point between the primary and secondary cyclones. Finally, this panel provides for the remote manual control of the three pressure control valves and allows one of these valves to be selected to act as a pressure relief valve for any preset pressure.

Unit Control Panel 5 provides a comprehensive set process alarms for all equipment which is not directly controlled from the Central Control Room, such as:-

Instrument Air Compressors
Burner Air Compressor
Ashing Compressor
Water Treatment Plant
Propane Supply Plant
Nitrogen Supply Plant

This panel also houses the comprehensive fire alarm system for the entire Facility.

Bed Material Feed is only required intermittently during start-up, therefore the panel for the remote manual control of the bed material feed system has been placed in the North east corner of the Control Room, behind the main panel.

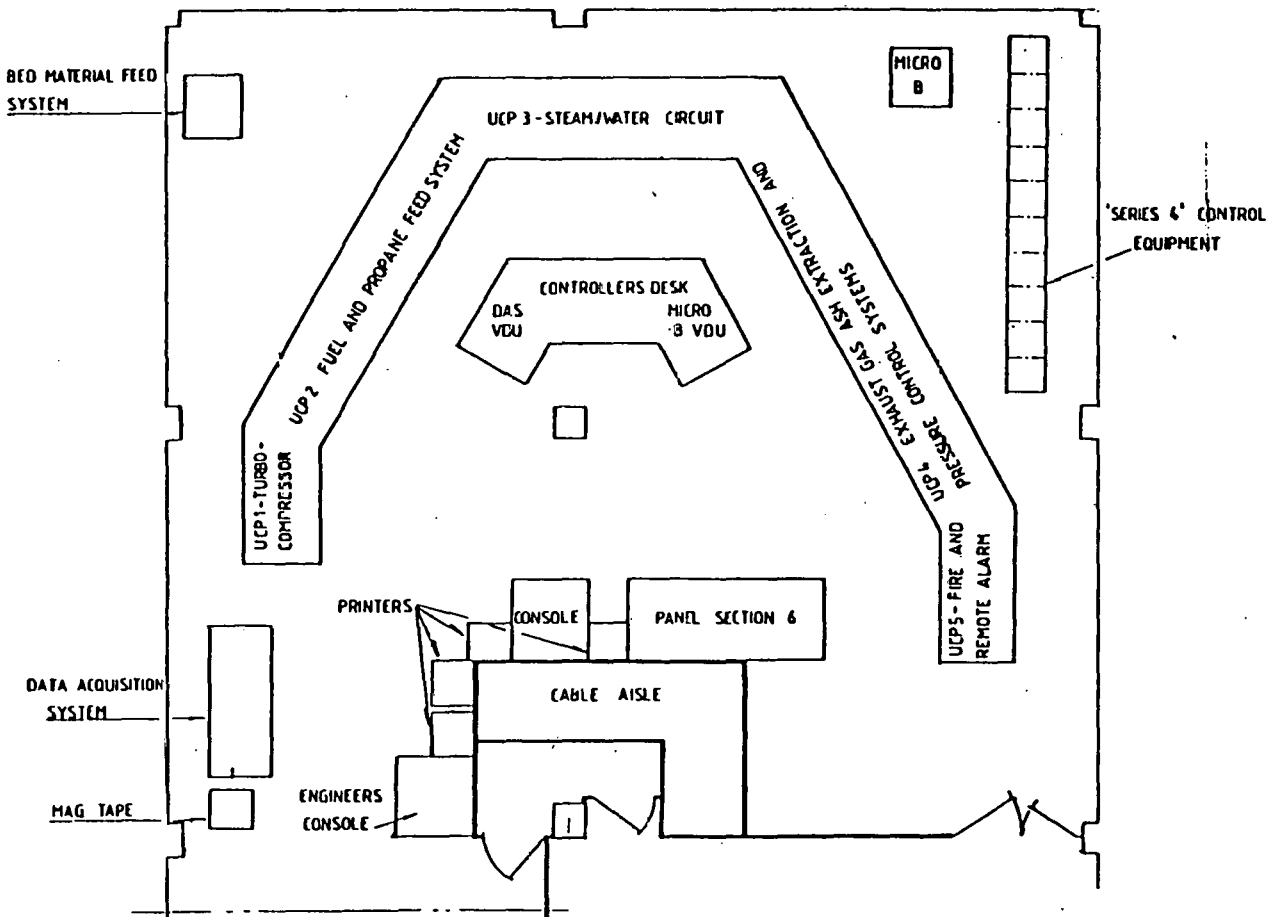


NCB (IEA Grimethorpe) Limited
Grimethorpe, Nr. Barnsley
South Yorkshire S72 7AB

IEA
COAL GRIMETHORP

TITLE
CENTRAL CONTROL ROOM LAYOUT

FIGURE 23

The Series 4 Equipment is the machine which processes the signals passing to and from the Facility and the Unit Control Panels.

The Micro B computer provides for automatic control of the fluidised-bed combustion process. The data Acquisition System is sited in the North west corner of the Control Room along with its attendant magnetic tape storage unit, the printer and the x-y plotter.

When the Facility is operational, the Central Control Room is manned by a basic crew of five, with assistants as necessary. Each of Unit Control Panels one to four has a process operator assigned to it, all coming under the command of the Controller. The Controller is in charge of all aspects of Facility operations and works from the desk in the centre of the Control Room. The Controller's desk has two visual display units, one displaying a wide range of process information and basic calculations derived from the DAS and the other displaying the performance of the Micro B in automatic control, which may be in use. There is also a set of dials on which the desired values for automatic control of the process variables may be set by the Controller. Should either of these electronic systems fail, the Controller's desk contains a meter giving direct readings of all the important variables and a display of the sixteen most important alarms. The Controller's desk also contains the means to communicate with all parts of the Facility and the Power Station by telephone, tannoy or radio.

# 9. FUEL PREPARATION

Contractor - Head Wrightson Process Engineering Ltd.
(Later Davy McKee)
Contract Reference No. - YCE 24/7867
Date Let - 9th August,1977

## 9.1 General Description

The contract for the Fuel Preparation equipment (see figure 24), provides for an installation (see figure 24) to accept raw coal from a 10,000 tonnes stockpile into a 30 tonnes capacity surge bin supplied by an armoured faced conveyor (AFC). Screening facilities, conveyor fed from the raw coal surge bin, are provided to permit + 25mm (1in) only feed to a primary 30t/h Hammer Mill crusher. All - 25mm (1in) coal is recombined and is conveyed to a 16t/h - 30t/h fluidised bed drier achieving an output of coal at - 1% moisture c.f. normal air dried value.

Secondary crushing and sizing of the dried coal is provided by two 10t/h Hammer Mills capable of comminution to -6.4mm or -1.6mm (¼in or 1/16in) as required, the product being pneumatically conveyed by Nitrogen to a 370 tonnes coal silo. The size spectra required for top sizes of 6.4mm, and 1.6mm respectively, is shown in figure 25 and the system is capable of continuous variation between the two with some extrapolation.

Storage is provided for 370 tonnes of prepared coal (24 hrs supply) alongside a dolomite storage silo having a 640 tonnes capacity (48 hrs supply) being supplied with pre-prepared material delivered by road tankers. Space for a 20 tonnes Additives Silo similarly supplied with pre-prepared material has been allowed for.

A batch blending system, integral with and supplied by the above storage system, functions to permit mixing of coal and dolomite to the proportions required by the Experimental Facility. The blender is equipped with weighing hoppers sensed by strain gauges; delivery control valves; and the necessary control system co-ordinated by a microprocessor unit.

The blend passes via a surge hopper to a dense phase pneumatic transport system, operated by Nitrogen, which supplies the blend to the surge hopper above the fuel injector at rates up to 21 tonnes/h.

The fuel preparation plant is all well tried fully commercial equipment and is completely locally controlled, except that the dolomite/coal ratio can be set and monitored from the main control room and certain block alarms repeat in the main control room.

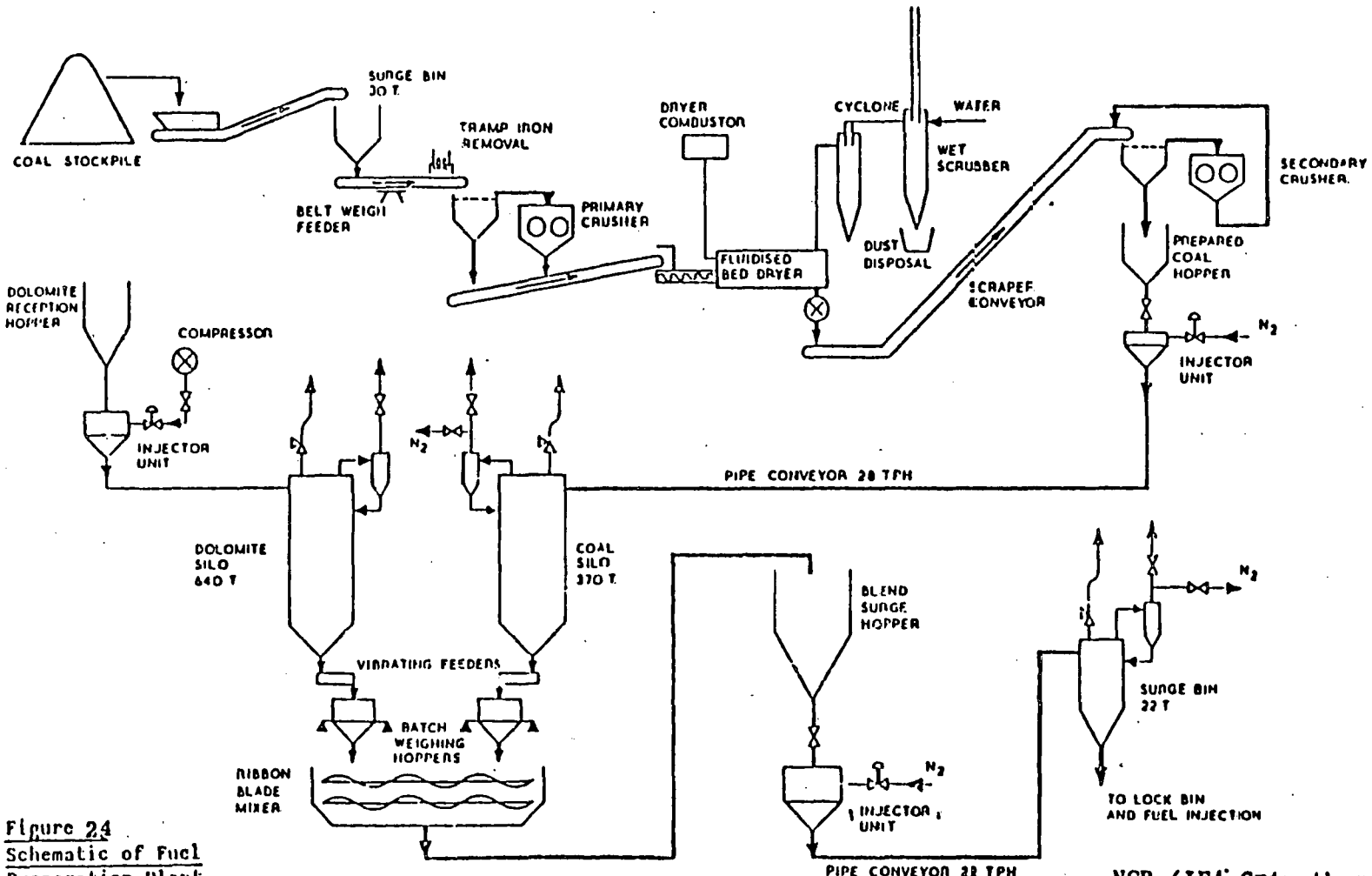


Figure 24
Schematic of Fuel
Preparation Plant

NCB (IEA Grimethorpe)
Pressurised Fluidised Ltd.
Bed Combustion Project

Figure 24

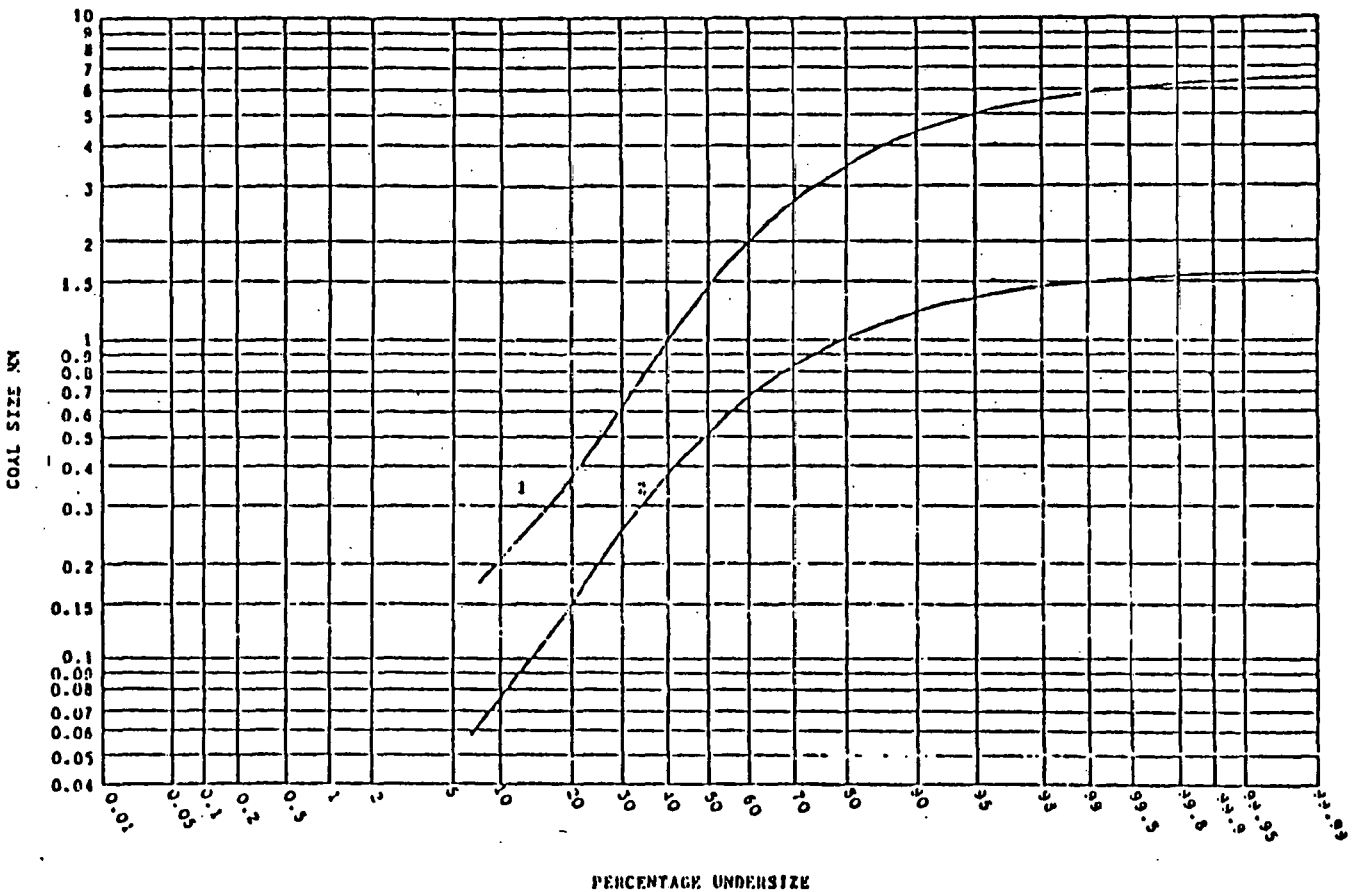


Figure 25
Coal Size Spectrum at Output
From Coal Preparation Plant.

NCB (IEA Grimethorpe) Ltd.
Pressurised Fluidised Bed
Combustion Project
Grimethorpe Experimental Facility

Figure 25

# 10. ASH HANDLING AND DEWATERING PLANT

Contractor - Dewplan (W.T.) Ltd.
Contract Reference Nos. - YCE 24/9178
YCE 24/10630
Dates Let - 19th January, 1978

## 10.1 General Description

The purpose of this plant is to recover as much as possible of the ash quench process, described in section 5.4, whilst at the same time producing a filter cake of solids of sufficient dryness to be disposed of to the nearby colliery spoil heap.

There are three sources of slurry, the fluidised bed, the primary cyclones and the secondary cyclones and the residual pressure in the blow-down vessels of these three systems delivers the slurry to the ash handling and dewatering plant. The bed ash is significantly coarser than the other two streams and is, therefore, routed to a degritter to remove coarse particles and the overflow of this stream joins the other two slurry streams in a balance tank before passing through the rest of the plant.

The specification for the plant is shown in Tables 7 and 8 while the generalised flow diagram is shown in Figure 26.

## 10.2 Detailed Plant Description

### 10.2.1 Degritter and Screw Conveyor

The degritter consists of a concrete chamber with a circular well served by a cambered influent watershed with angled flow deflectors and an outlet flume with containment weir. Bridging the chamber is a scraper mechanism with twin arms which sweep the complete floor of the well. A dross chute set in the floor of the well leads to the lower end of a variable speed screw conveyor. A drain connection is sited in the base of the well. The screw conveyor is contained in a mesh covered steel trough, the upper end of which has a discharge opening on the underside with a chute attached.

The scraper is rotated very slowly in an anticlockwise direction through a shaft from a reduction gearbox which is driven by a close coupled electric motor. The drive incorporates a drive control unit which protects the mechanism against overload. A visual indication of the torque loading is provided by a pointer on a 0-100% scale. Trip switches integral to this unit will activate an alarm should the torque loading exceed a preset value and will stop the mechanism should the torque loading increase further.

The screw conveyor is rotated slowly in a clockwise direction, when viewed from the driven end, at a variable speed through a chain and sprocket arrangement from a variable pulley drive gearbox driven by a close coupled electric motor. A manual adjusting knob on the gearbox can be rotated whilst the

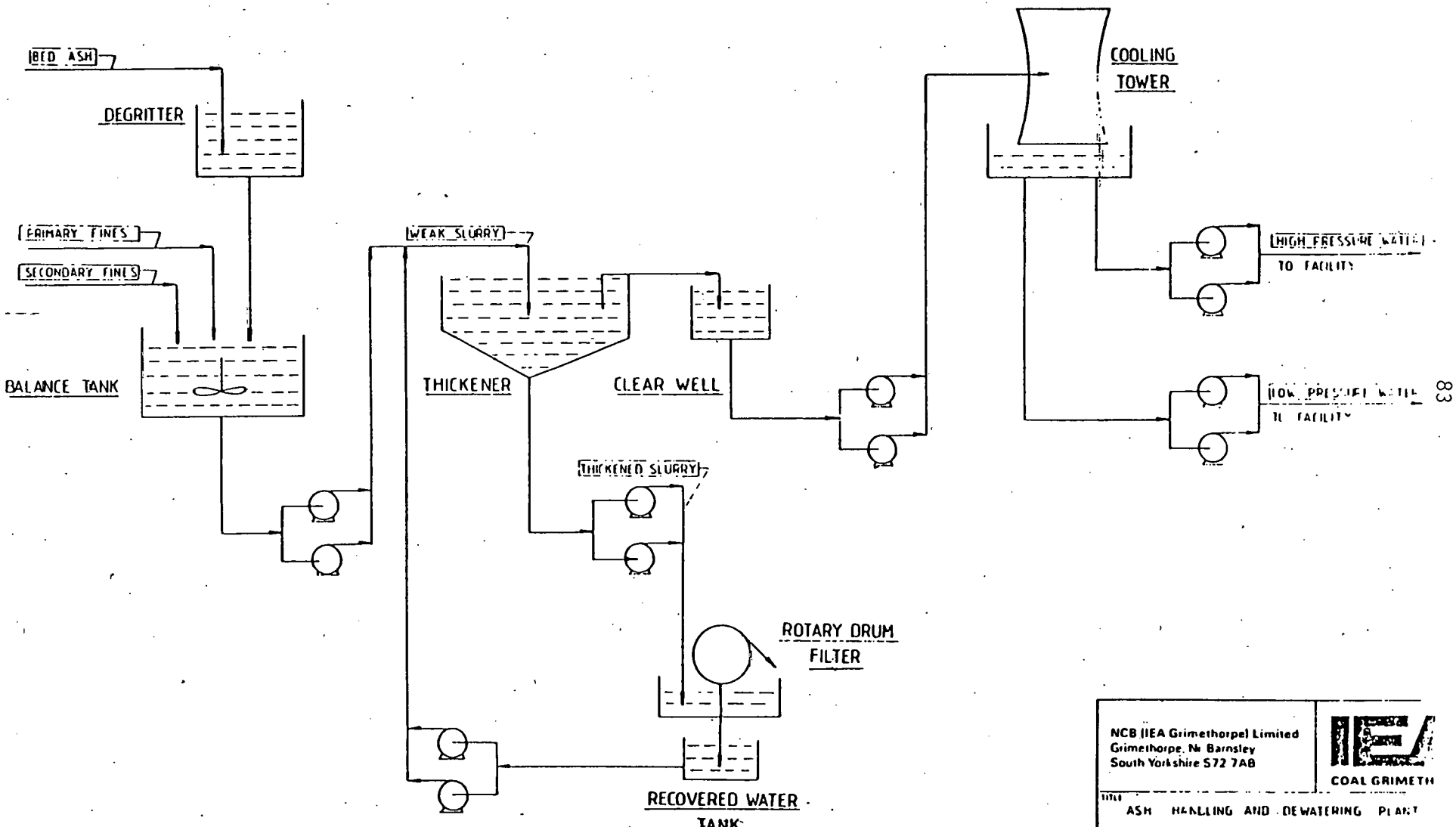


NCB (IEA Grimethorpe) Limited
Grimethorpe, Nr Barnsley
South Yorkshire S72 7AB

COAL GRIMETH

TITLE
ASH HANDLING AND DEWATERING PLANT

FIGURE 26

Table 7

Table 8

| Ash Source | | No Operating | Total Ash Blown Down |
|---|---|---|---|
| | Bed | 1 | 17 tonnes/h |
| Cyclone | Primary | 4 | 9 tonnes/h |
| Cyclone | Secondary | 4 | 0.68 tonnes/h |

Table 7
Maximum Ash Loadings from Combustor and Cyclones

| Parameter | | Inlet | Outlet |
|---|---|---|---|
| | pH | 5.5 - 8.5 | 6.5 - 7.5 |
| | Flow | 200 - 300t/h | |
| Ash | Quantity | 20t/h (max) | |
| Ash | Particle Size | 20 microns-6.5mm | |
| Ash | Density | 2 kg/l | |
| | Temperature | 80° | 40°C |
| | T.D.S. | - | 1000 ppm |

Table 8
Ash Quench Water Treatment Specification

NCB (IEA Grimethorpe) Ltd.
Pressurised Fluidised Bed
Combustion Project
Grimethorpe Experimental
Facility.

machine is in motion to alter the driving speed, which can be varied over the full operating range. The top bearing and bottom stuffing box, at each end of the screw, are protected from ingress of grit by clean flushing water connections.

Ash slurry from the Bed Circuit, Excess Fuel Prep Liquor or Recirculation water will enter the degritter up the influent pipes and cascade into the well through the deflectors. Large particles immediately fall to the floor where they are swept towards the dross chute by the scraper. The heavy dross falling down this chute is gathered by the rotating screw conveyor which carries it by Archimedes principle to the upper end where it falls from the conveyor through the discharge chute into a collection recepticle.

The supernatant liquor flows from the degritter over the outlet weir which maintains a minimum fluid depth within the chamber. This effluent passes out through the outlet flume to cascade into the next stage in the process; the balance tank.

### 10.2.2 Balance Tank & Slurry Transfer Pumps

The balance tank consists of an epoxy lined concrete chamber bridged separately by two agitators. The chamber has a drain well with drain, an overflow,system flushing and slurry transfer pump suction connections. A series of control electrodes are sited in the chamber. The electrodes, of different lengths, activate level controllers with functions for high level alarm, recirculation control and low level pump protection and alarm.

Each agitator impellor is rotated slowly through a shaft from a reduction gearbox driven by a close coupled electric motor.

The two 100% duty slurry transfer pumps each have suction and discharge isolating valves and pressure gauges, gland flushing water supply and system flushing connection (in the suction pipework). Each pump is driven from an overhead mounted electric motor through a belt drive system.

Supernatant from the Degritter cascades into the chamber and is mixed with any liquor from three other sources; these being Primary Cyclone, Secondary Cyclone and Effluent (from the Condensate Polishing plant effluent sump), which enters the tank through discharge pipes. Mixing is achieved by the two agitators which rotate in opposite directions also keeping particulate matter in suspension. The duty slurry transfer pump draws slurry from the balance tank and discharges it into the feedwell of the Thickener.

An effective operating level is maintained by allowing water from the Clearwell Transfer Pump discharge to be recirculated into the Degritter when the normal level is at a minimum and ceasing this recirculation when the normal level is satisfactory.

Should the level in the balance tank become excessively high, an alarm is activated; should it become excessively low, the Slurry Transfer Pump and Dosing Pump are stopped and an alarm is activated.

### 10.2.3 Polyprep Unit and Dosing Pumps

The proprietary Polyprep unit consists of a frame mounted assembly on top of a partitioned tank. The assembly is made up of a powder hopper serving a feeder box which itself has a hopper leading down to a variable speed screw feeder and below that is a powder dispenser. The partitioned tank is made up of three ageing chambers and a stock chamber. Each of the ageing chambers is bridged by a mixer and the stock chamber is fitted with control electrodes. Each of the four chambers is connected to the next through a riser tube.

The screw feeder has a wire screw rotated from a gearbox driven by a variable speed electric motor. Each mixer has a lower paddle with flat blades and an upper paddle with pitched blades on a single shaft rotated from a gearbox driven by an electric motor. The water disperser has an inlet spray diffuser and outlet dispenser tube. The inlet is connected to a clean water supply which first passes through a solenoid valve, flowmeter and pressure reducing valve. A control cabinet mounted onto the frame assembly contains all the associated electrical equipment for automatic operation. The diagram, Figure 27, complements this description.

The two 100% duty dosing pumps each have suction and discharge isolating valves, discharge pressure relief valve and flow indicator. The pumps are of the reciprocating diaphragm type and have manually adjusted stroke controls which can vary the output over the full operating range. Each pump is driven by an electric motor through a geared crankcase. The crankcase incorporates the stroke adjustment control with digital setting indicator.

Powder in the reserve hopper fills the feeder unit which discharges powder at a rate set by the motor speed control. The powder falls into the dispenser where it is rapidly and intimately mixed with the water flowing in via the solenoid valve. The resultant solution drops into the first ageing chamber and up the riser tube. When the level in the chamber is above the top of the tube, excess solution flows into the second ageing chamber and when that is full, similarly into the third ageing chamber, and from there into the stock chamber. By the time the solution has reached the stock chamber, it should be sufficiently aged and swollen to make it suitable for use. The duty dosing pump draws solution from the stock chamber and pumps it at the preset rate into the slurry transfer line to the Thickener.

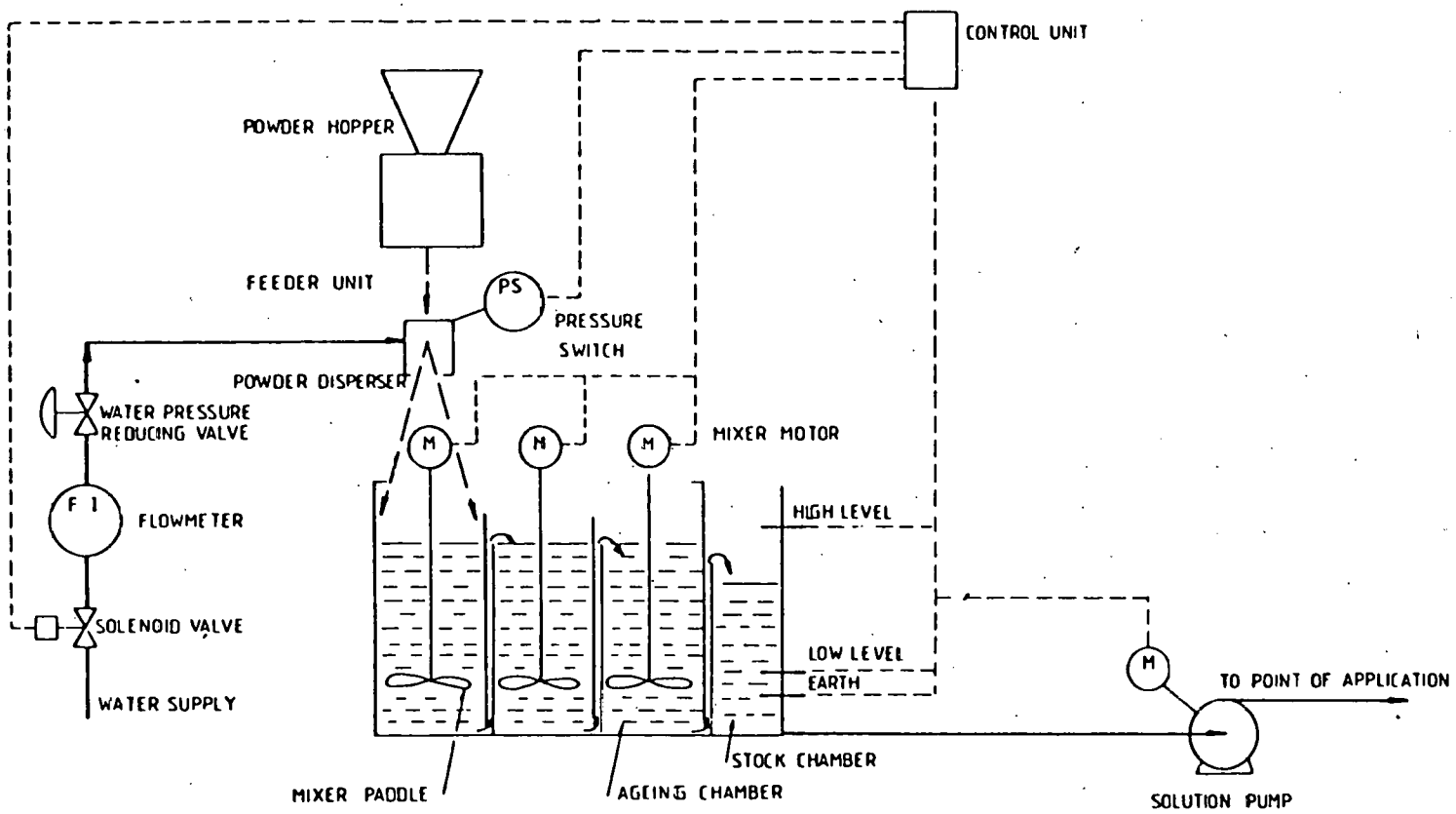


NCB (IEA Grimethorpe) Limited
Grimethorpe, Nr Barnsley
South Yorkshire S72 7AB

IEA
COAL GRIMETHORPE

TITLE
POLYPREP UNIT

FIGURE 27

Control electrodes in the stock chamber, which activate level controllers, maintain an effective solution level by starting the feeder and opening the solenoid valve at low level and stopping the feeder and closing the solenoid valve at high level. Should the dispenser water pressure fall below a preset value, an alarm is activated by a pressure switch mounted at the dispenser to show "Loss of Water" on the control cabinet. A heater in the feeder unit avoids moisture pick up by the powder, ensuring that it remains fluid.

### 10.2.4 Thickener

The thickener consists of a large circular concrete shell, the base of which slopes down to a central steel discharge cone with underflow discharge connection. Across the shell is situated the bridge superstructure which supports the main drive unit, lifting unit, feedwell and influent pipework. Suspended from the superstructure is the rake assembly which has two short rake arms and two long rake arms all mounted onto a single central drive shaft. Mounted onto and beneath the shaft is the cone scraper sited within the discharge cone. Mounted on the shaft and beneath the feedwell is the dispersion cone. Around the periphery of the shell, and part of it, is the launder fitted to which is a plastic notched weir plate. The launder outlet is a flume which bridges across to the Clearwell.

The rake shaft is rotated very slowly in a clockwise direction from a reduction gearbox driven by an electric motor. Mounted above the gearbox is the lifting unit and drive control. The drive control is virtually identical to that on the Degritter and, similarly, the device will activate an alarm if the torque exceeds a preset value. If the torque is excessive, the device activates the lifting unit.

The lifting unit consists of a worm screw jack rotated from a reduction gearbox driven by a reversing electric motor. When activated by the drive control, the unit will raise the entire rake assembly until the torque is reached below the trip setting (or until the lifting unit reaches maximum travel). The lifting unit has an operating range of 600mm and may be used to raise or lower the rake assembly by push button control. The device may also be used manually by engaging a handwheel operated crank. The purpose of these devices is to protect the mechanism against damage caused by the rake arms hitting an obstruction, or drag caused by very heavy sludge. The diagrams, Figures 28 & 29. complement this description.

Slurry, which may be dosed with coagulant aid, enters the Thickener via the Slurry Transfer Pump discharge into the feedwell, flows down the feedwell and into the main precipitation zone. Due to the very low velocity in this zone, particulate matter tends to settle to the bottom of the thickener. This may be assisted by the use of an aid which agglomerates matter into heavier particles and is of particular advantage on very fine matter which might otherwise stay in suspension.

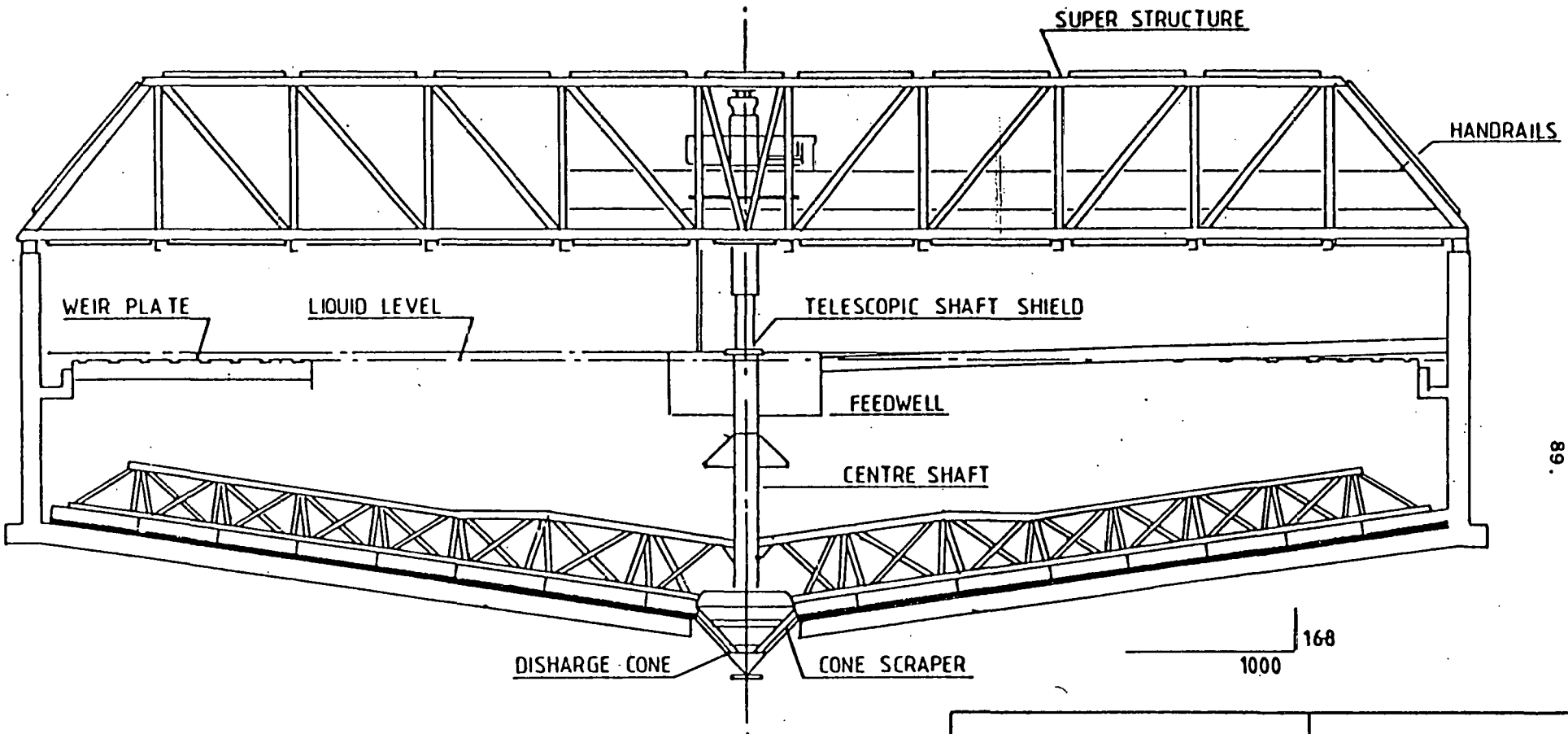


NCB (IEA Grimethorpe) Limited
Grimethorpe, Nr. Barnsley
South Yorkshire S72 7AB

IEA
COAL GRIMETHORPE

TITLE THICKENER CROSS SECTION

FIGURE 28

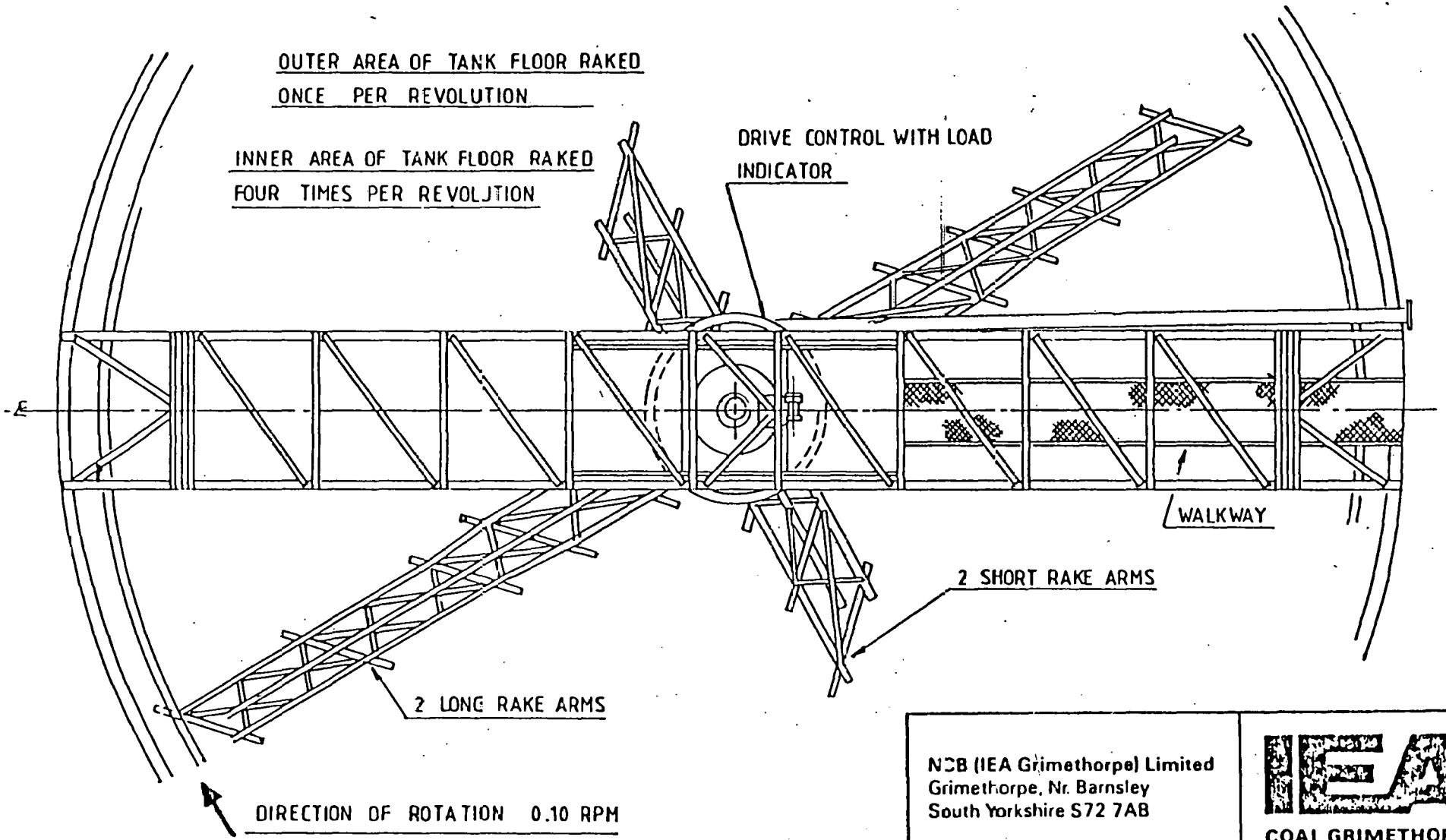


NCB (IEA Grimethorpe) Limited
Grimethorpe, Nr. Barnsley
South Yorkshire S72 7AB

IEA
COAL GRIMETHORPE

TITLE
THICKENER PLAN
FIGURE 29

Matter falling to the bottom forms a sludge which is swept across the floor of the thickener towards the centre by the angular rakes on the rotating arms. The two short rake arms help speed up the displacement of sludge to the centre from the inner area. Once in the centre, the sludge falls into the discharge cone where the cone scraper prevents clogging pending discharge of the sludge from the thickener by the Underflow Discharge Pump.

Supernatant, which should contain virtually none of the original slurry, rises up to overflow the weir plate into the launder which collects water from all round the thickener and channels it to the outlet flume where it flows into the Clearwell.

### 10.2.5 Clearwell & Clearwell Transfer Pumps

The clearwell is an epoxy lined concrete chamber and has a drain well with drain, overflow, system flushing and clearwell transfer pump suction connections. In addition to the flume connection from the Thickener, other inputs to the clearwell consist of a water make up line and transfer pump minimum flow discharge return, the latter maintaining a protective flow of water through the clearwell transfer pump under no demand conditions. A series of control electrodes are sited within the chamber. The electrodes, of different lengths, activate level controllers with functions for high level alarm, Cooling Tower inlet control, water make up control, excess water extraction control and low level pump protection.

The two 100% duty clearwell transfer pumps each have suction and discharge isolating valves and pressure gauges, discharge non return valve and gland flushing water supply. Each pump is driven through a flexible coupling by an in line electric motor.

Water in the clearwell is drawn off by the duty clearwell transfer pump and discharged principally into the Cooling Tower. A pressure switch monitoring the common discharge water pressure will start the standby clearwell transfer pump if the pressure falls below a preset value. The clearwell transfer pumps can be selected for automatic control.

The flow of water to the Cooling Tower is measured by a flow transmitter which sends signals to the control panel to provide visual indication, graphic readout and totalisation of the flow. The clearwell transfer pumps also provide water for flushing purposes on the dewatering plant and for recirculation when required, but these flows are not monitored. The flow transmitter, therefore, measures the actual flow of water through the plant, under normal conditions.

An effective operating level is maintained in the clearwell by allowing make up water to enter the chamber when the level is at a minimum and ceasing this make up when the level is satisfactory. Should the level reach a maximum excess water is drawn off by the duty Excess Fuel Prep Liquor (EFPL) Pump until the level is satisfactory. Should the level become excessively high, an alarm is activated, should it become excessively low, the clearwell transfer pump is stopped and an alarm is activated.

### 10.2.6 Cooling Tower & Pond

The Cooling Tower consists of a rectangular timber structure with timber internals and incorporating two 50% duty cooling fans which are driven by direct coupled electric motors. The internals consist of an inlet distributor system of notched rectangular troughs and a cascade of triangular section slats. Beneath the cascade is a void into one side of which the fans are set. A hatchway gives access to the inside of the void. A discharge pipe from the base of the void goes down into the cooling tower pond, over which the tower is sited.

The pond consists of an epoxy lined rectangular concrete chamber with a sloping floor. It has a pump suction and drain well with drain, overflow, system flushing, water make up and HP and LP pump suction connections. In addition to the cooling tower discharge, other inputs to the pond consist of HP and LP Pumps minimum flow discharge returns, these maintaining a protective flow of water through the pumps under no demand conditions. A series of control electrodes are sited in the chamber. The electrodes, of different lengths, activate level controllers with functions for high level alarm, water make up control, emergency water make up control with alarm and low level pump protection with alarm.

Water from the Clearwell Transfer Pump discharge flows into the cooling tower and is distributed over the full area of the tower by the inlet distributor. The water spills over the troughs through the notches and falls as a series of small droplets which cascade down over the arrangement of slats where it is rapidly cooled by the updraught of air being blown up through the tower by the cooling fans. The cooled water then rejoins in the void and falls down the discharge into the pond. Water is drawn off from the pond by the duty HP and LP Pumps.

An effective operating level is maintained in the pond by allowing make up water to enter the chamber when normal level is at a minimum and ceasing this make up when normal level is satisfactory. Should the level in the pond become very low, an emergency make up supply is additionally allowed to enter the chamber, the source being the supernatant in the Thickener which is gravity fed and, of course, is not cooled. An alarm is activated when the emergency make up is demanded. Should the level become excessively high, an alarm is activated, should it become excessively low, the HP and LP Pumps are stopped and an alarm is activated.

### 10.2.7 High Pressure & Low Pressure Pumps

The two 100% duty High Pressure (HP) and Low Pressure (LP) pumps all have suction and discharge isolating valves and pressure gauges, discharge non return valves and gland flushing water supply. Each pump is driven through a flexible coupling by an in line electric motor. Each common discharge has a pressure switch monitoring the water pressure. The device will start the associated standby pump and activate an alarm if the pressure falls below a preset value. The HP and LP pumps can be selected for automatic control. Both sets of pumps draw water from the CT Pond and discharge it to their respective services.

The LP pumps provide, additionally, the system flushing water for the plant.

10.2.8 Excess Fuel Prep Liquor Pumps

The two 100% duty Excess Fuel Prep Liquor (EFPL) pumps each have suction and discharge isolating valves and pressure gauges and discharge non return valves. Each pump is driven through a flexible coupling by an in line electric motor. The pump suctions are connected to a common suction with the Clearwell Transfer pumps and so draw water from the Clearwell. The pumps discharge either to waste or to a tanker filling point as required, their purpose being to remove excess water from the system, as indicated in the Clearwell (See Section 10.2.5). The EFPL pumps can be selected for automatic control.

10.2.9 Underflow Discharge Pumps

The two 100% duty underflow discharge pumps each have suction and discharge isolating valves, pressure gauges and system flushing supplies. Gland flushing water is also provided. The pumps are driven from overhead mounted electric motors through a belt drive system. The pumps draw settled sludge from the Thickener and discharge it normally to the RDV Filter, but alternatively to a tanker filling point if required.

10.2.10 Rotary Drum Vacuum Filter and Trough Conveyor

The Rotary Drum Vacuum (RDV) Filter is essentially of steel construction consisting principally of a large drum revolving at a variable speed in a semi-circular trough shaped tank. The cylinder of the drum is faced with a sectional grid of polypropylene lattice, making it completely porous. A polypropylene woven filter cloth revolves around the full width of the drum and onto take up rollers in the form of a continuous loop. The drum is rotated by a worm drive coupled to a variable speed gearbox driven by an electric motor.

Within the tank is a horizontal agitator rake which operates with a reciprocating motion whilst following the contour of the tank. The operating mechanism consists of arms from each side of the drum, which are pivoted and connected to cranks which rotate by shafts connected to a central reduction gearbox, this being belt driven from a remote mounted electric motor. Sited on the frame, adjacent to this mechanism, are the two cloth edge wash sprayers, one for each edge.

The filter cloth leaves the top of the drum and passes over a support roll, around the discharge roll under the wash roll and over the return take up roll to rejoin the drum. A deflector blade is fitted immediately after the discharge roll. Inner and outer cloth wash distributors, each with 18 stainless steel V jet sprayers are situated on each side of the cloth above the wash roll. A similar distributor is sited below the return take up roll which adjusts the cloth tension. Each end of the roll can be raised or lowered by a manually operated screw jack connected to each bearing. Each jack is handwheel operated through a screw drive which

has a digital revolution counter, and has a maximum travel of 600mm.

Between the support roll and discharge roll are a pair of tracking sensors, one at each edge of the cloth and a similar pair between the wash roll and take up roll. These sensors incorporate a pair of pneumatically tensioned rollers which grip the cloth as it passes through and a lever operated pneumatic valve. When in motion, if the cloth should tend to wander to one side, it will operate the lever which will release the rollers. Due to the grip from the other edge of the cloth by the other rollers, the cloth should be drawn back into position, allowing the grip to be re-established. Adjacent photo electric cells activate an alarm if the cloth fails to centralise.

The trough conveyor consists of a horizontal and inclined transverse belt of synthetic rubber construction with raised segmentation to prevent roll back on the inclined section. The belt travels in a continuous loop over rollers mounted on a steel framework. The horizontal section of the conveyor is sited below the deflector blade of the filter. The belt is driven by a roller at the head of the conveyor, the roller itself being rotated from a chain and sprocket arrangement driven by an overhead reduction gearbox and electric motor. An adjustable chute below the head of the conveyor acts as a discharge and is positioned by a hand winch operating through a chain drive system from a geared handwheel.

Sludge from the Underflow Discharge Pump flows into the RDV Filter tank where it is kept in motion by gentle agitation to prevent settlement. Vacuum within the rotating drum causes sludge to be drawn onto the filter cloth, the fluid content passing through the fabric into the drum itself. As the drum rotates out of the tank, the wet solid matter stays on the filter cloth, held there by the vacuum, which continues to draw off excess moisture, leaving a "cake" of solid matter on the cloth. It is at this stage that the edges of the cloth are cleaned by a spray of water from the wash jets each side.

The cloth leaves the top of the drum and eventually passes over the discharge roll. As it travels downwards, the caked matter is scraped off by the deflector blade and falls onto the belt conveyor to be transported up to the discharge chute where it will drop into a collection recepticle for disposal. The chute can be angled so as to divert the waste into an empty recepticle when the duty one becomes full.

The cloth, having been relievcd of the cake, will still be dirty and as it passes down to the wash roll it is sprayed with jets of water from each side. The spent wash water, which will be dirty, collects in a trough mounted under the sprayers and is discharged into the Recovered Water Tank via a drain. If the cloth is being washed with dilute inhibited hydrochloric acid to remove precipitate build up, then the discharge is diverted to the Wash Water Tank for recycling.

After cleaning, the cloth travels up and over the return take up roll prior to returning to the drum. Any tensioning necessary to keep the cloth taut is made by adjusting the height of this roll. Since the outside or duty face of the cloth is in contact with this roll, any solid matter which the

wash system has failed to remove may get deposited on the roll and build up may occur. It is for this reason a wash distributor is sited under this roll to enable periodic cleaning of the roll as required. Since the distributor is supported from the roll mountings, it travels with it when the tension is adjusted and so is always a constant distance from the roll surface.

10.2.11 Recovered Water Tank & Pumps

The recovered water tank consists of an epoxy lined enclosed concrete chamber with drain, overflow and recovered water pump suction connections. Inputs to the tank are from the RDV Filter drains, the discharge from the Filtrate Pump and a recirculation line from the recovered water pumps. Within the chamber are two high speed agitators rotated by direct coupled electric motors mounted on the roof of the tank through which the shafts pass. Sited in the chamber are a series of control electrodes. The electrodes, of different lengths, activate level controllers with functions for high level alarm and recovered water pump and pump suction control.

Also sited in the chamber is a temperature monitor with indication and alarm functions.

The two 100% duty recovered water pumps each have suction and discharge isolating valves and pressure gauges and discharge non return valve. The common suction is connected through an automatic valve to the recovered water tank and has a flushing connection which is connected through an automatic valve to the Clearwell common pump suction connection. The pumps are driven by close coupled electric motors.

Excess water recovered from the RDV Filter and its washing process collects in the tank through the two inlets. The contents are continuously mixed by the two agitators to prevent settlement of any solids content.

Water is drawn off by the duty recovered water pump and discharged normally to the Thickener inlet but to the Balance Tank if required. The recovered water pumps can be selected for automatic control.

An effective operating level is maintained in the tank by starting discharge by the duty pump when the level is at a maximum and stopping draw off when the level is at a minimum. When this level is reached, the suction from the tank is isolated and a flushing connection to the pump is opened. The pump is allowed to continue discharging for a preset time period, after which the suction conditions revert and the pump stops. Should the level in the tank become excessively high, an alarm is activated. Should the temperature in the tank exceed a preset value, an alarm is activated.

10.2.12 Filtrate Receiver & Pump

The filtrate receiver consists of an enclosed cylindrical steel vessel. It has an inlet connection from the RDV Filter, an outlet connection to the filtrate pump and a vacuum connection to the Vacuum Pump. There is also a vacuum balance line connection to the filtrate pump. The vessel is fitted with control electrodes. The electrodes

of different lengths, activate level controllers with functions for pump control and high level alarm.

The single filtrate pump has suction and discharge isolating valves and pressure/vacuum gauges, discharge non return valve, gland flushing connection and vacuum balance connection. The pump draws water from the filtrate receiver and discharges it normally to the Recovered Water Tank, but to the Clearwell if required. The pump is driven by a close coupled electric motor.

Filtrate is drawn into the receiver under vacuum from the RDV Filter drum and collects in the vessel. An effective operating level is maintained by starting the filtrate pump when normal level is at a maximum and stopping the pump when it is at a minimum. Should the level become excessively high, an alarm is activated. The filtrate pump can be selected for automatic control.

### 10.2.13 Vacuum Pump & Separator

The vacuum pump is of the wet ring type using a centrifugal impellor principle and being double ported is virtually two pumps in one. It has suction, discharge and sealing water connections. The pump is driven by a remote mounted electric motor through a belt drive system.

The separator consists of a small enclosed steel vessel with side entry and top discharge connections, in addition to a drain connection with U seal discharge.

Air from the Filtrate Receiver and thus from the RDV Filter is drawn into the vacuum pump and discharged to atmosphere through a silencer. The pump uses water as a compressant and this is provided through the sealing water connection. The discharged wet air passes through the separator which collects excess moisture and drains it off into the Washwater Tank.

### 10.2.14 Washwater Tank & Pumps

The washwater tank consists of an open cylindrical steel vessel with drain, overflow, water make up, acid inlet and wash return connections. The tank is fitted with a float operated water make up valve and float operated level switch.

The two 100% duty washwater pumps each have suction and discharge isolating valves and pressure gauges and discharge non return valve. The common suction draws from the washwater tank and discharges to the RDV Filter wash sprayers normally, but to a flushing connection on the RDV Filter inlet line if required.

An effective operating level is maintained in the tank by the action of the float operated valve. Should the level become excessively low, the washwater pump is stopped and an alarm is activated.

### 10.2.15 Inhibited Hydrochloric Acid System

The system consists of an enclosed rubber lined cylindrical steel tank and vacuumatic filling system. The tank has discharge, filling and vacuum transfer connections. It is fitted with three sight glasses for visual liquid level determination.

The vacuumatic filling system consists of a hydraulic ejector with motive water connection from the make up water supply, discharge connection to the local drain and suction connection to the Inhibited Hydrochloric Acid Storage (IHAS) Tank via a barometric safety loop which incorporates a vacuum breaker connection vented to atmosphere.

The IHAS tank is filled from carboys via the filling line by vacuum within the tank created by the hydraulic ejector. Motive water flowing through the ejector draws air from the safety loop and thus the tank. When sufficient acid has been drawn into the tank, as determined by observation of the level, the vacuum is released through the vent. Acid is discharged into the Washwater Tank when required, to make up a dilute solution for dissolving precipitate off the filter cloth in the washing process as necessary. The safety loop is to prevent acid being sucked through the ejector in cases of accidental over-filling of the IHAS tank.

## 11. ELECTRICAL SERVICES

Contractor - National Coal Board - Barnsley Area
Contract Reference No. - YCE 24/7869
Date Let - 1st January, 1978

### 11.1 Systems Description

Four 3.3kV supplies and one 550V supply are received from the adjacent Grimethorpe Power Station, and these connect to the following switchboards.

1. One 3.3kV supply to each side of a 3.3kV Feeder Switchboard. Supplies are distributed from this board to a 3.3kV Motor Starter Board and through two 3.3kV/550V 3MVA transformers to a 550V Main Motor Control Centre.

2. Two 3.3kV supplies via two 3.3kV/550V 500kVA transformers and auto-changeover contactor to a 550V Board serving the Fire and Process Water Pumps.

3. One 550V supply to the Burner Compressor Motor.

The 3.3kV Feeder Switchboard has a S.C. MVA rating of 150MVA and comprises two incoming circuit-breakers separated by a section breaker, with two outgoing circuit-breakers on one side of the bus-bar and one on the other side. The board is of G.E.C. manufacture type B.V.P. 17 single-bus-bar, air-insulated metalclad switchgear units with oil circuit-breaker. Each circuit-breaker is fitted with 2 pole overcurrent and one pole earthfault protection and intertripping is provided between incomers and the circuit-breakers at the supply end of the incoming circuits.

The 3.3kV Motor Starter Board is of G.E.C. manufacture type H.M.C. 1072 with four vacuum type contactors. The incoming supply cable is connected direct to the busbars.

The four starters serve the Ashing Compressor rating 772kw and three Combustor Feedwater Pump each of 250kW rating. Interlocking is provided such that only one of the plant's equipment can be started at any one time. This maintains starting currents and associated volt drops within the limits required by the system.

The starters are provided with P & B Golds overcurrent and earth fault circuit protection.

The 550V Main Switchboard is of G.E.C. manufacture standard Mark V(a) with a fault rating of 50kA. It comprises feeder circuit breakers with overcurrent and earth fault protection, starters with thermal overcurrent and earth fault protection and switchfuse feeders. The feeders supply to the following important loads:-

1. Ashing Compressors Auxiliary Supply Board
2. Kamyr Cooling Water Pump Starters
3. Instrument Air Compressors Plant
4. Ash Quench/Water Treatment Plant

5. Air Filter Unit (Turbo Compressor)
6. De-watering Plant
7. Fuel Preparation Plant
8. Propane/Nitrogen Plants
9. Lubrication Oil Purifier Plant (Turbo Compressor)
10. Lubrication Oil Reservoir Heater (Booster Compressor)
11. Combustor Burner Equipment
12. Control and Instrumentation System. (Normal A.C. Supply)
13. Control and Instrumentation System (Inverter Supply) Operations
14. C & I Invertor system for Research Equipment.
15. Lighting and Small Power

The system provides supplies to all equipment and systems associated with the project.

A 350kVA 550V Emergency Diesel Generator is also provided to power the Combustor Emergency Feedwater Pump and Kamyr Cooling Water Pumps under emergency conditions and Operations Invertor System.

Lighting and small power is supplied from a 160kVA Delta/Star 550V/415V/240V three phase transformer with the neutral point solidly earthed. Essential control and instrumentation equipment is supplied from a 110V AC inverter system, and non-essential control and instrumentation from a 15kVA 550V/190V/110V Delta/Star transformer with a solidly earthed neutral point.

# 12. PIPEWORK AND SERVICES

Contractor - Vereinigte-Kesselwerke A.G.
Contract Reference No. - YCE 24/7868
Date Let - 16th February, 1978

## 12.1 General Description

The scope of this contract was to provide all pipework and service equipment not included within other contracts and to ensure compatibility at the numerous interfaces. The service equipment consisted of all water pumps, the burner air compressor and the instrument air compressor system. The contract also provided for the supply of all services to the booster compressor and the ashing compressor although the actual machines were supplied by others.

The sections dealing with steam and condensate should be read in conjunction with Figure 5 in Section 4.

## 12.2 High Pressure Steam System

The steam produced in the fluidised bed combustor/heat exchanger installation is used for the following purposes:

Turbine to drive the compressor for process air, with outgoing lines for:

Venting system for the turbine condenser
Cushioning deaerator steam for the feed water tank
Cushioning steam for the condensate storage tank
Freeboard injection
Flue gas duct injection
Air drier for process air
Connection to the neighbouring plant.

The steam is flowing out of the fluidised bed combustor/heat exchanger into a steam piping. At the inlet to this steam pipe, the below-mentioned items are installed in the following order:

Steam flow metering device
Stop gate valve, pneumatically controlled
Stop gate valve, pneumatically controlled
Non-return flap valve.

Due to the arrangement of the non-return flap valve, the steam can flow in one direction only to the steam manifold.

The steam piping terminates on the steam manifold. With the exception of the steam pipe for cushioning steam for the condensate storage tank and for the flue gas duct injection, the steam pipes for other consumers are taken from the steam manifold.

The steam manifold and the steam range system of the neighbouring power station are connected. This connecting steam pipe can be isolated at the connection point in the neighbouring station. Through this connecting steam pipe, steam can be obtained from the neighbouring power station or steam can be supplied to the latter. Operation of the fluidised bed combustor/heat exchanger installation is thus independent of the steam flow generated by it. The steam flow is measured and indicated in both the directions. For start-up purposes, the required steam flow will be obtained from the neighbouring station, this is also the case in the event of trouble with the Facility steam generation when the steam temperature drops. If such a trouble occurs, the pneumatically controlled stop gate valves in the steam line will be closed by quick action to protect the drive turbine for the process air compressors.

In the steam lines to the consumers, the following valves are installed (indicated in the direction of the steam flow) according to the requirements, viz.:

Drive Turbine for Process Air Compressors

Stop gate valve on the header
Steam meter (only for steam to the drive turbine)

Steam Line to Venting System

Stop valves (6) situated before the connection to the venting system (Compair supply).

Cushion Deaerator Steam for the Feed Water Tank

Stop gate valve (situated on the header)
Reducing valve for pressure reduction with attached injection system
Safety valve with atmospheric vent line (to protect the low pressure piping against inadmissibly high over-pressure).

Cushioning Steam for the Condensate Storage Tank

Stop valve (in the piping)
Pressure reducing valve (pneumatically controlled)

Freeboard Injection

Control station consisting of:

Stop gate valve
Control valve (pneumatically controlled)
Stop gate valve
Bypass line to control station with stop control valve

Flue Gas Duct Injection

Stop gate valve (situated at the point of tapping from the steam piping of the fluidised bed combustor/heat exchanger installation)
Division into four injection pipes to the 4 flue gas ducts each having one control station consisting of:

Stop valve
Control valve (pneumatically controlled)
Stop valve
Bypass line to the control station with stop control valve

Air Drier for Process Air

Stop valve (located on the header)

Start-up and Shut-down

For start-up and shut-down of the fluidised bed combustor/ heat exchanger installation, a separate start-up line is provided.

The start-up piping branches off from the actual steam piping, viz., upstream of its stop gate valves. However, the branch is situated after the steam flow meter; thus the steam flowing off through the start-up line can also be measured with the aid of it. The start-up line leads into the start-up vessel. During the start-up process, the steam produced in the fluidised bed combustor/heat exchanger installation passes through this pipe into the start-up vessel until the condition of the steam is up to the high quality steam standard as designed. During this period, the stop gate valves in the steam piping will remain closed.

In the start-up line - seen in the direction of flow - a pneumatically driven stop gate valve, a control valve (pneumatically acting) and an attemperator are installed. In the attemperator feed water is injected, if necessary, and thus the steam temperature is maintained constant at a desired value. The feed water is taken from the discharge line downstream of the feed water pumps.

## 12.3 Condensate System

Condensate is produced in the plant downstream of the condenser of the drive turbine for the process air compressor.

Moreover, turbine condensate, clean drain and condensate from the start-up tank etc., is produced in the plant.

The turbine condensate, clean drain etc., produced, is pumped into the condensate storage tank.

The clean drain system is described in section 12.6.

The steam/water mixture produced during the start-up and shut-down processes is led into the start-up vessel. There, steam and water are separated. The steam is discharged into atmosphere, the water drops into the start-up vessel and from there it is pumped into the condensate storage tank. For this purpose, the start-up system was installed which is described under section 12.2.

The condensate system consists of:

2 Turbine Condensate Extraction Pumps (not supplied by VKW)

1 Turbine condenser (not supplied by VKW)
2 Turbine Condensate coolers (not supplied by VKW)
Control station for turbine condensate
(not supplied by VKW)
2 Condensate return pumps
1 Condensate storage tank
1 Condensate cooler
Piping system with control station for water level in the feed water tank.

Condensate polishing plant (See section 13)

The condensate produced in the turbine condenser will be conveyed into the condensate storage tank with the aid of the condensate extraction pumps. The condensate quantity to be removed from the turbine condenser is adjusted by means of the control station dependent on the water level.

The condensate produced in the plant and the condensate from the start-up process are collected and also conveyed into the condensate storage tank. Thus, all the condensate produced in the plant is collected in the condensate storage tank and from there it is processed into the feed water tank with the aid of the condensate return pumps.

A condensate cooler is installed in the common suction pipe of the condensate return pumps. The cooler is designed as a surface-type attemperator; water from the cooling water system is used as cooling water. The condensate flowing to the pumps is cooled off in the cooler in order not to endanger condensate treatment. The attemperator can be shut off at the inlet and outlet and has a bypass piping which can be shut off. On the condensate side and on the cooling water side, the cooler is protected against an inadmissibly high over-pressure by means of one spring-loaded safety valve each. The dirt particles possibly existing in the condensate are separated in the filter installed in the suction piping before each condensate return pump. Thereby damage to the pumps by dirt particles in the condensate is prevented.

The condensate return pumps are arranged in parallel and have one common suction and discharge line each.

Each of the two condensate return pumps has a maximum delivery of 107 tons/hr. For each condensate return pump the following valves and fittings are available:

1 manual shut-off gate valve in the suction line
1 filter in the suction line
1 non-return flap valve in the discharge line
1 manual stop gate valve in the discharge line
1 drain valve on the suction side of the pump

The condensate fed into the feed water tank is conveyed via a condensate polishing plant. Thereby, the quality of the condensate essential for re-use as feed water is obtained. The condensate polishing plant is isolated on both the sides and has a bypass piping which can be isolated. For reasons of design, the condensate polishing plant had to be protected by a safety valve. Installed therein is a spring-

loaded safety valve with additional loading which is controlled by means of three pressure alarms. The safety valve is arranged in the bypass piping so that for all flow possibilities the condensate polishing plant is protected against excess pressure. The blow-off line of the safety valve terminates in the discharge line of the drain vessel which leads to atmosphere. Through this piping the condensate blown out of the safety valve is collected in the drain vessel.

The condensate flow conveyed into the feed water tank is adjusted with the aid of the condensate control valve dependent on the water level of the feed water tank.

The minimum flow delivery of the condensate return pumps is set and ensured by means of a minimum flow control valve. The design of the control for the minimum flow condensate control valve is such that upon closing of the condensate control valve, the minimum flow condensate control valve opens and it closes when the condensate control valve opens. Thereby, it is ensured that the delivery of the condensate return pumps can under no circumstances be less than the minimum flow. Operation of the pumps at "zero" delivery can thus not be carried out and over-heating and damage to the pumps is prevented.

The minimum flow line branches off from the common condensate discharge line. The minimum flow line with the minimum flow condensate control valve is available for both the condensate return pumps in common and terminates in the return/filling line. The provision of a non-return flap valve in the minimum flow line before the latter terminates in the return/filling pipe ensures that the condensate flow can only be effected from the minimum flow line.

The return/filling pipe is connected with the condensate storage tank and the condensate piping system of the neighbouring power station. The filling control valve is installed in the return/filling pipe to the condensate storage tank. The condensate level in the condensate storage tank is maintained within a fixed range with the aid of the filling control valve. The control valve setting is dependent on the condensate level in the condensate storage tank. In the event that the condensate level in the condensate storage tank cannot be maintained with the condensate produced in the plant, the condensate will automatically be taken from the neighbouring power station and fed into the storage tank through the return/filling pipe. The flow is effected through the pressure difference between the condensate piping system of the neighbouring power station and the condensate storage tank with correspondingly open filling control valve.

The condensate minimum flow is either returned to the condensate storage tank according to the water level in the feed water tank or into the condensate piping system of the neighbouring power station. Distribution of the condensate minimum flow over both the plant components is also possible. Flow of the condensate minimum quantity to the condensate storage tank and into the condensate piping system of the neighbouring power station depends on the position of the filling control valve. Distribution of the condensate minimum flow for one or another plant component is

automatically effected through the position of the filling control valve as a function of the condensate level in the condensate storage tank.

The condensate for cooling the clean drain condensate tank is taken from the return/filling pipe.

The condensate control valve, the minimum flow condensate control valve and the filling control valve are each arranged in an associated control station consisting of the following valves and fittings:

Stop gate valve
Control valve (pneumatically controlled)
Stop gate valve
Bypass line to the control station with stop control valve.

The condensate storage tank is horizontally arranged and designed as a pressure vessel; it can be inspected. A spring-loaded safety valve with an atmospheric vent line is arranged to prevent an inadmissibly high over-pressure. A safety device against vacuum producing has not been fitted. The pressure in the condensate storage tank is maintained at a constant value with cushioning steam and thus also the condensate temperature is maintained. An over-flow pipe with water loop prevents overfilling of the condensate storage tank. The condensate from the over-flow runs into the vent line of the drain tank. The condensate storage tank has a drain pipe with stop valve which integrates with the over-flow piping. For operation without steam cushion, the vents are to be opened fully.

## 12.4 Boiler Feed-Water System

The heating surfaces of the fluidised bed combustor/heat exchanger installation are supplied with feed water through

3 main feed water pumps and
1 aux. feed water pump (drive from diesel generator)

Each of the three main feed water pumps has a delivery of 50% of the steam output of the fluidised bed combustor/ heat exchanger installation under normal operating conditions. All the pumps are driven by a motor which is directly coupled with the pumps.

The feed water pumps are arranged in parallel. The pumps withdraw the water from the feed water tank through one common suction piping and they deliver also into one common discharge line. From there, the feed water is flowing through the heating surfaces. Adjustment of the necessary feed water flow is effected by means of trimming control valves arranged before the inlet to the evaporator heating surface of the combustor and the heat exchanger.

The feed water temperature in the feed water tank is constantly maintained at about 110°C due to the essential deaeration. Due to the delivery of the hot water, the bearings of the feed water pump are constantly flushed through with cooling water and are thus cooled.

For each feed water pump, the following valves are available:

1 manual stop gate valve in the suction piping
1 filter in the suction piping
1 minimum flow full bore non-return valve in the discharge line
1 manual stop gate valve in the discharge line
1 bypass line with manual stop valve to the stop gate valve in the discharge line
1 stop valve downstream of the minimum flow full bore valve
1 non-return valve downstream of the minimum flow full bore valve
1 drain valve on the suction side of the pump.

The minimum flow line outlet is situated upstream of the non-return flap valve in the discharge line seen in the direction of the flow.

The minimum flow line of the pumps terminates in one common minimum flow line of a large nominal bore which leads into the feed water tank. The minimum flow full bore valve opens automatically as soon as the pump delivery is below a certain water flow rate and closes automatically as soon as the pump delivery exceeds this certain water flow rate. Thereby operation of the feed water pump at zero delivery is prevented and thereby also overheating of the and damage to the pump.

To prevent dry operation of the feed water pump, the open position of the manual stop gate valve in the suction piping of the pump is monitored and this is a starting and operating criterion for operation of the feed water pump. The dirt particles possibly existing in the feed water are separated in the filter installed in the suction piping before each feed water pump. Thereby damage to the pump caused by dirt particles in the feed water flow is avoided.

Water for the following injections is taken from the feed water discharge line:

Reducing station for deaerator steam,
Attemperator in the start-up piping.

Each of these injection points has an injection station consisting of one control valve with one preceding and one succeeding stop valve and a bypass line which can be isolated and which leads to the injection station. Moreover, one manual stop valve each is arranged at the beginning of the injection lines.

## 12.5 Start-up System

The start-up system was installed for start-up and shut-down of the fluidised bed combustor/heat exchanger installation. For start-up or shut-down processes, the water/steam flow or one portion of the steam flow or one portion of the water is not led through the high pressure steam piping into the steam system, but to the start-up vessel. For this purpose the following was specially installed: 1 start-up pipe downstream of the superheater, 1 start-up pipe upstream of the superheater and 1 start-up pipe off the auxiliary heat

exchanger with the respective valves and fittings as well as corresponding valves and fittings in the high pressure steam piping.

During start-up of the fluidised bed combustor/heat exchanger installation the feed water, and in the course of the further process the feed water/steam mixture and then the steam is flowing into the flash tank of the start-up vessel and is blown down. Thereby a separation into water and steam takes place. The steam (blow down steam) flows through the vent line of the flash tank to atmosphere and the water drops into the start-up vessel. The water collected in the start-up vessel is withdrawn from there with the aid of the start-up condensate pumps and conveyed into the condensate storage tank. From there the water/condensate is transported to the feed water tank and thus it is returned into the water/steam circuit. During the start-up processes, one portion of the feed water, namely the one contained in the blow down steam, i.e., the lost one, must be replaced. During shutdown of the fluidised bed combustor/heat exchanger installation and during start-up of the auxiliary heat exchanger the same process takes place.

The start-up condensate system consists of:

1 start-up vessel with flash tank
2 start-up condensate pumps
1 start-up condensate control valve.

The start-up condensate pumps are arranged in parallel and have one common suction and one common discharge piping. Each of the two start-up condensate pumps has a maximum delivery of 75 tons/hr.

For each start-up condensate pump, the following valves and fittings are available:

1 manual shut-off gate valve in the suction piping
1 filter in the suction piping
1 non-return flap valve in the discharge line
1 manual stop gate valve in the discharge line
1 bypass line with manual stop valve to the stop gate valve in the discharge line
1 minimum flow stop valve for manual actuation
1 non-return flap valve succeeding the minimum flow stop valve
1 drain valve on the suction side of the pump.

The minimum flow line outlet is situated upstream of the non-return flap valve in the discharge line seen in direction of flow of the start-up condensate. The minimum flow line of the pump terminates in one common minimum flow line which leads into the start-up vessel. The minimum flow stop valve must be opened on both the pumps by hand. The flow through each pipe is always effected at a rate of 10 $m^3$/hr when the pumps are in operation. Operation of the start-up condensate pump at zero delivery is thereby prevented and thus also overheating of the and damage to the pump.

The water/condensate collected in the start-up vessel is conveyed into the condensate storage tank with the aid of the start-up condensate pump. The condensate flow in this case delivered by the pump is adjusted with the aid of the start-up condensate control valve as a function of the condensate level in the start-up vessel.

The start-up vessel is horizontally arranged; it can be inspected. The start-up flash tank is placed on the start-up vessel; the two vessels are interconnected. A vent line is connected in the dome of the flash tank. At the point where the vent line terminates, a silencer with outlet to the atmosphere is arranged. Any nuisance caused by noise shall be prevented by the silencer. The flash tank and the start-up vessel are protected against too high a pressure and vacuum by means of the vent line. A drain pipe with drain control valve (pneumatically acting) prevents overfilling of the start-up vessel. The drain control valve opens as soon as a correspondingly high condensate level is reached. The low condensate level is situated approximately at the maximum condensate level in the start-up vessel controlled by the start-up condensate control valve. The start-up condensate from the drain runs into the vent line of the drain tank. The start-up vessel has a drain piping with shut-off valve which is incorporated into the drain piping.

## 12.6 Clean Drain System

The clean drain system consists of:

1 clean drain tank
1 clean drain return pump.

For the clean drain return pump, the following valves and fittings are available:

1 manual gate valve in the suction line
1 filter in the suction line
1 non-return flap valve in the discharge line
1 manual gate valve in the discharge line.

The following is collected in the clean drain tank:

Clean drain (condensate) from the plant
Condensate from the overflow of the condensate storage tank
Condensate from the blow down line of the safety valve in the condensate piping before the condensate polishing plant
Water from the overflow of the start-up vessel.

The condensate collected in the clean drain tank is supplied into the condensate storage tank with the aid of the clean drain return pump. Delivery is effected through control of the pump by the level switches.

The dirt particles possibly still existing in the condensate are separated in the filter installed in the suction line before the clean drain return pump. Thereby damage to the pump caused by dirt particles in the clean drain are prevented.

Excessive venting of the clean drain and thus water loss from the water/steam condensate circuit are prevented by injection of cooling water into the clean drain tank. Thereby it is also ensured that the temperature of the condensate in the tank cannot exceed a certain specified value. Condensate is used as cooling water which is taken from the return/filling pipe of the clean drain system. The provision of a non-return flap valve in the cooling water line near the inlet to the vessel ensures that the direction of the water flow can only be into the vessel. The cooling water flow to be injected is automatically set with the aid of the cooling water control valve dependent on the condensate temperature in the clean drain tank. The control valve is arranged in a control station consisting of the following valves and fittings:

Stop valve
Control valve (pneumatically controlled)
Stop valve
Bypass line to the control station with stop control valve.

The clean drain tank is horizontally arranged; it can be inspected. The tank has a vent line to atmosphere at the end of which a silencer is arranged. The silencer has been provided to prevent nuisance by noise. The tank is protected against too high an over-pressure and vacuum by the vent line. An over-flow pipe with water loop prevents over-filling of the clean drain tank. The condensate from the over-flow runs into the dirty drain system. The clean drain tank has a drain pipe with stop valve incorporated into the over-flow pipe.

## 12.7 Low Pressure Steam and Condensate System

Connection was carried out onto an available system (10.5 bar and 200°C) at the existing power plant. The low pressure steam and condensate system was installed in the existing power plant and from this point a piping of NB 80 was led to the propane and nitrogen station. From this piping, a piping of NB 25 branches off to the air inlet filter of the main compressor; moreover, a piping of NB 25 branches off to the slurry extruding building and another piping of NB 50 to the H & V Room as well as one piping of NB 25 to the ash discharge system.

The condensate is returned into small condensate tanks at most of the connection points. From these tanks the condensate is returned to the existing power plant through pumps. These pumps are controlled by means of float switches. Should the plant be out of operation during the winter months, all the pipes must be emptied.

## 12.8 Cooling Water System

All the cooling water is supplied from the existing power plant and also returned to the latter. The new collecting pipe of NB 700 is connected to the existing supply lines. From this piping, all the consumers branch off.

Connected are:

the main condenser of the GEC turbine
the main oil cooler
the stand-by oil cooler
the oil purifier
the main compressor air intercooler
the expander after-cooler
the booster compressor pre-cooler
the booster compressor after-cooler
the booster oil cooler
the condensate return cooler
the ash compressor with booster pumps
the three instrument air compressors
the feed water pumps
the start-up pumps
one connection for Head Wrightson

With the exception of the cooling water from the start-up pumps, all the cooling water is returned to the existing power plant. On some coolers, small safety valves were installed in order to prevent a pressure increase in the water system with closed cooling water valves and fittings.

During operation, care shall be taken that the pipes are well vented. During the frost period, it must be ensured that water is constantly flowing in order that the pipes do not freeze. If this is not possible, the pipes must be emptied.

## 12.9 Process Air Supply to Combustor

### 12.9.1 General

A system for operation of the combustor and a system for pressurising the ash removal systems have been installed.

The process air of the combustor system is required for:

Combustion and fluidisation of the bed in the furnace of the combustor
Transportation of the coal/limestone mixture
Transportation of the bed material into the fluidised-bed combustor
Withdrawal of the bed material from the fluidised-bed combustor

Each process air system has a correspondingly designed compressor station. A connecting line which can be isolated is arranged between the two systems; if necessary, air can flow from the combustor system into the ash system. The provision of a non-return flap valve in this connecting pipe ensures that the pre-determined direction of air flow is always maintained. The arrangement of a non-return flap valve in the discharge line after the ashing compressor ensures furthermore that in the event of air flow through the connecting pipe the air cannot flow to atmosphere through the shut-down ashing compressor.

The main turbo compressor and the ashing compressor were supplied by others but their main features are as follows:-

## 12.9.2 Process Air for Combustor Furnace System

Suction filter with silencer
Low pressure compressor
Air cooler
High pressure compressor
Start-up and minimum flow line with silencer
Safety valve
Piping for combustion and fluidisation of the bed in the combustor

Piping for booster compressor designed as follows:-

Air cooler
Booster compressor
Air cooler
Start-up and minimum flow line
Safety valves
Duplex drier

Piping for

Transportation of the coal/limestone mixture
Transportation of the bed material into the fluidised-bed combustor
Withdrawal of the bed material from the fluidised-bed combustor.

Drive of the booster compressor is effected through an air turbine. The air for this turbine is taken from the piping behind the LP compressor and after expansion in the turbine it is returned into the suction line before the LP compressor (See Section 12.13 for a description of the booster compressor).

The process air for the combustor system is required at about max. 12 bar and compressed in the compressors to this pressure. By adjustment of a flow control valve, the air flow required at any time for combustion and fluidisation of the bed is obtained while allowing combustor pressure to be controlled independantly of turbo compressor outlet pressure.

The air required for transportation of the coal/limestone mixture and the bed filling material as well as for extraction of the bed filling material must for process reasons have a pressure which is above the air pressure in the fluidised bed (in the furnace of the combustor). This pressure increase is effected by the booster compressor. By correspondingly adjusting various control valves, the air flow required in each instance for the individual processes is provided. Through minimum flow automatics, it is even with throttles or no consumption of process air prevented that the minimum air flow will be less than the admissible value and thus surging action of the booster compressor is avoided. These automatics are controlled by the air flow metering in the piping before the compressor.

Upon opening of the minimum flow valve, the minimum air flow is returned into the piping before the compressor. The minimum air flow valve can be isolated and has a bypass line which can be isolated.

The air of the booster compressor supplied for the processes passes through a Duplex drier. The moisture contained in the air is separated in the Duplex-drier and condensation in the transporting and bent lines is prevented.

One spring-loaded safety valve each is arranged in the piping after the

High pressure compressor and the
booster compressor

to protect the process air lines against an inadmissibly high over-pressure.

The safety valve serving as protection against over-pressure in the piping system after main compressor is designed as follows:

| | | |
|---|---|---|
| Qty. | | 1 |
| acting | | directly |
| Blowoff | Kg/sec | 31 |
| Blowoff pressure | bar-G | 12.2 |

The safety valve serving as protection against over-pressure in the piping system after booster compressor:

| | | |
|---|---|---|
| Qty | | 1 |
| acting | | directly |
| Blowoff | Kg/sec | 2.7 |
| Blowoff pressure | bar-G | 14.2 |

### 12.9.3 Process Air for Ash Extraction Systems

Suction filter with silencer
Ashing compressor
Air cooler (contained in the aux. compressor)
Safety valve with blowoff piping
and silencer for discharge into atmosphere
Pipes to the ash discharge tanks.

The ashing compressor is electric motor-driven. The compressor is a four stage centrifugal compressor rated to deliver 2 kg/s of air at 12 bar pressure.

A spring-loaded safety valve is arranged on the auxiliary compressor and thereby the piping system is protected against too high a pressure. The blowoff line of the safety valve leads into atmosphere. The safety valve discharges also the air flow which is not consumed by the compressor delivery to the ash system. The safety valve serves also as a start-up and minimum flow valve and pressure maintaining valve.

## 12.10 Instrument Air System

Dry and clean air is required for operation of the controlling equipment. For provision of this air, the instrument air compressor system was installed.

The instrument air compressor system is designed in accordance with the path of the air as follows:

Suction filters with silencer
3 x compressors
Air coolers
Water Separators
2 x air tanks
Filter (Pre-cleaner) }
Duplex drier } Dry cleaning plant
Filter (Final Cleaner) }
Pipes to the consumers }

See Figure 30

Three compressor stations (from suction filter up to and including water separator) are available. Each compressor can deliver 12.5 standard $m^3$/min at a pressure of 8 bar. Two stations of the three compressors are constantly in operation or are ready for operation whereas the third compressor station serves as a stand-by unit. The system from suction filter up to and including the water separator is protected against an inadmissibly high over-pressure by means of a safety valve. For all the three compressor stations, the safety valve is arranged between the compressor and the after-cooler. These three systems are combined after the water separator.

The individual components of the system have to perform the following tasks:

Suction Filter

Dirt particles carried along with the sucked air flow will be removed. Thus the air enters the compressor in a free from dirt particles condition, thereby preventing damage to the compressor.

Compressor

The compressor sucks the air, compresses it correspondingly and delivers it then to the succeeding components of the system up to the consumers. A bone-dry motor-driven compressor is available.

Air Cooler

The air is heated when being compressed. This heat is removed again in the air cooler. The air cooler is designed as surface-type attemperator, that means the heat removal is effected indirectly; air and cooling agent are separated by the heat transfer area. Cooling water is used as cooling agent.

Water Separator

The humidity contained in the sucked air is condensed to water during the compressing process. In the separator this water is separated from the air flow.

The separated water is drained from the separator via an automatic condensate trap into the dirty drain system.

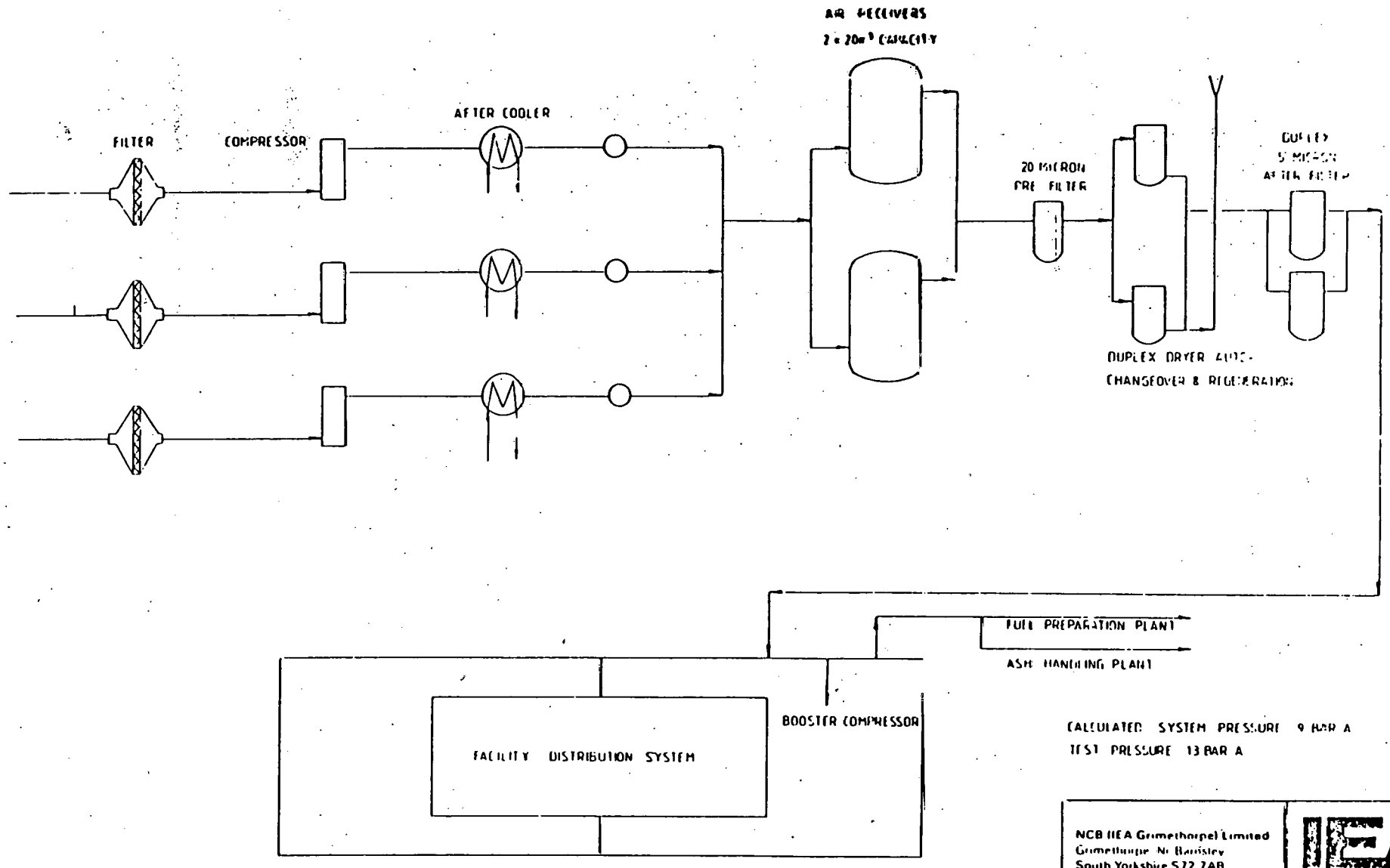


CALCULATED SYSTEM PRESSURE 9 BAR A
TEST PRESSURE 13 BAR A

NCB IEA Grimethorpe Limited
Grimethorpe Nr Barnsley
South Yorkshire S72 7AB

IEA
COAL GRIMETHORPE

INSTRUMENT AIR DISTRIBUTION SYSTEM

FIGURE 30

## Air Tank

In the air receivers, the air delivered by the compressors is collected and accumulated. The volume of the two air tanks is the same and rated so ample that on failure of the compressor delivery for a lengthy period instrument air is still available for operation of the controlling equipment. Due to the accumulation of the air in the air tanks, the delivery of the compressors is independent of the respective consumption of instrument air and can be chosen so that is economically justifiable. The compressors maintain the air pressure in the tanks at the pre-determined valve. Through a pressure impulse, they are switched in (air pressure low) and switched out (air pressure high). Switching in and out of the compressors can be pre-determined by an automatic sequence.

Each air tank is protected against inadmissibly high over-pressure by means of a safety device. In the lower end plate of the tank there is an automatic condensate trap which constantly drains any possibly still collected water.

The two air tanks are arranged in parallel to each other in the piping system. Each tank has an inlet and outlet which can be isolated and therefore each tank can be separated from the system.

## Drying Plant

This plant comprises one

Filter (pre-cleaner)
Duplex drier, and
Filter (final cleaner).

Any possibly still existing dirt particles in the air shall be separated when the two filters are being flown through. The possibly still existing residual humidity in the air will be removed in the Duplex drier. These two processes ensure that the air is free from dirt particles and dry for the controlling equipment so that the latter cannot be damaged.

During operation of the system, one drier is in use while the second air drier for regeneration (removal of the absorbed humidity) is blown through by about 6 % of the total air flow for the time during which regeneration takes place. The air flow required for regeneration is discharged into atmosphere via a silencer. For repair of the Duplex-driers, the driers can be isolated and bypassed through a bypass. A manual stop valve is arranged in the bypass line.

The final cleaner consists of two filters. Each filter can be isolated independently of the other filter. When the system is in operation, one filter is constantly flown through by air whereas the second filter serves as a stand-by.

To determine contamination of the pre-cleaners and final cleaners, a differential pressure measuring device is arranged.

## 12.11 Burner Air System

For operation of the propane gas premix burners, combustion and cooling air is required. For making available this air flow, the burner air compressor system was installed.

The burner air compressor system is designed according to the path of air, viz.,

Suction filter
Silencer
Compressor
2 Air coolers
Water separator
Air tank
Pipes to the consumers
Separating station for water and dirt.

The individual components of the system have the following task:

### Suction filter

Dirt particles carried along with the sucked air flow are removed from it. The air enters thus the compressor in a free from dirt particles condition and damage to the compressor is prevented.

### Silencer

The silencer reduces the intensity of the noise coming out of the suction opening.

### Compressor

The compressor sucks the air, compresses it correspondingly and delivers it then into the succeeding plant components up to the consumers.

The compressor is of 2-stage reciprocating design and has an air cooler arranged between the stages. Compressor and air cooler form one element.

The compressor is motor-driven.

The compressor is rated at 28.6 standard $m^3$/min. at an operating pressure of 14 bar.

### Air Cooler

The air is heated when being compressed. This heat is again removed in the air cooler. The air cooler is designed as a surface-type attemperator, that means the heat removal is effected indirectly; air and cooling agent are separated by the heat transfer area. Effluent cooling water is used as cooling agent. Two air coolers are available. The air cooler arranged first in the air path is situated between the two stages of the compressor and forms together with them, one element. The second air cooler arranged in the air path forms one independent element and is situated in the air piping after the compressor.

Water Separator

The humidity contained in the sucked air is again condensed to water during the compressing process. In the separator this water is separated from the air flow. This separated water is drained from the separator through an automatic condensate trap and runs then into the dirty drains system.

Air Tank

In the air tank, the air delivered by the compressor is collected and accumulated. Due to the accumulation of the air in the air tank, the delivery of the compressor is independent of the respective air consumption of the burners and can be chosen so that it is economically justifiable. The compressor maintains the air pressure in the tank at a pre-determined value. By means of a pressure impulse it is switched in (air pressure low) and switched out (air pressure high).

The air tank is protected against an inadmissibly high over-pressure by means of a safety valve. An automatic condensate trap is arranged in the lower end plate of the air tank which drains any still collected water or oil.

A non-return flap valve is arranged in the air piping leading from the compressor to the air tank. The non-return flap valve allows only the air flow to pass freely from the compressor to the air tank and prevents the air tank from being emptied through the suction piping of the compressor in the event of shut-down of the compressor.

Separating Station for Water and Dirt

In this separating station, one water separator and one fine filter are installed because it must be ensured that the air flowing to the burners is free from moisture and particles. Any substances separated in the water separator are drained through an automatic condensate trap.

If necessary, for instance for cleaning purposes, the station can be isolated and bypassed by means of a bypass line. A manual stop valve is available in the bypass line.

12.12 Miscellaneous Pipework

A number of relatively minor interconnecting pipework systems were also included in this contract:-

a) General Service Air System

Compressed air is required for maintenance and repair work. For making available this air, the compressed air system was installed.

The compressed air system is connected to the compressed air compressor system already existing in the neighbouring power station. The compressor air system is arranged so that air can be taken from all suitable points.

b) Vent System

The vent system comprises all the safety blowoff pipes, vent lines and discharge lines.

The lines discharge into atmosphere, some through a silencer. The lines are provided with drain pipes. After a certain operating period, the drain pipes should regularly be checked for plugging.

c) General Service Water System

In the main building a ring main of NB 50 with several tapping points was installed. Connection was effected from the existing power plant.

d) Fire Fighting Water System

A ring main of NB 150 was installed in the main building with tapping points at various floors. Automatic swinging reels are installed at the tapping points. Moreover, four tapping points of NB 80 were installed at 0 m floor inclusive of a hose box. The system is fed from the existing power plant.

e) Lower Pressure Water

The L.P. water pumps in the water treatment plant deliver through this piping approximately 397 $m^3$/hr water at 1.93 bar pressure. The water is used as transport water for the slurry lines. Moreover, the ash slurry tanks are fed with this water. The piping is equipped with drains and with vents at the high points. Prior to being put into operation, the piping must be well vented. When there is frost, care should be taken that the water is flowing or that the piping is emptied.

f) High Pressure Water

The $H_3P$. pumps deliver water at a rate of about 260 $m^3$/hr. from the water treatment plant to the main building. Pressure of 12 bar exists. In the main building, the ash slurry tanks are supplied with water. The piping is provided with drains and vents. Prior to putting the pipe into operation, vent it well. When there is frost, take care that the water is flowing or the piping is emptied.

g) Slurry to Water Treatment Plant System

As an ashwater mixture is transported through these pipes, no valves and fittings were installed on this piping. Cleanout holes and drain stubs with flange have been provided on these pipes. When there is frost, take care that these pipes are flown through with water or that these pipes are totally emptied through these drain stubs.

## 12.13 Transport Air Booster Compressor and Drier

### 12.13.1 Booster Compressor

Contractor - Cryostar - France S.A.
Contract Reference No. - YCE 24/9179
Date Let - 7th December, 1977

The compressor consists of a single free-running shaft rotating at high speed (up to 28,000 rpm), with an expansion impeller mounted at one end, and a compression impeller at the other. The expansion impeller or "expander" acts as an air turbine, producing power by expanding air drawn from the outlet of the LP section of the main compressor. The power produced by the expander is transmitted along the shaft to drive the compression impeller. The compression impeller compresses air tapped from the outlet of the HP section of the main compressor. The booster compressor thus generates air for supply to the fuel injection system at a pressure above the air supplied by the main compressor.

The power developed by the expander (and also therefore the speed of the shaft and the amount of compression produced by the compression impeller) is varied by controlling the amount of air entering the expander. Adjustable flow control nozzles are provided for this purpose, positioned at the inlet to the expansion impeller.

Under normal running conditions, the fuel injection system requires an air supply at 2.1 bar above the pressure of the air supplied by the main compressor. A pressure transducer is provided to sense the pressure rise from the main compressor HP air supply to the injection air downstream of the air driers. An electronic controller then regulates the opening of the expander inlet flow nozzles in order to drive the booster compressor at the correct speed to maintain the required 2.1 bar pressure rise.

A fast closing isolating valve is provided in the expander air supply line, which quickly cuts off the air driving the booster compressor, when an emergency trip condition occurs.

Anti-surge equipment is provided which opens a compressor recirculation valve, when it anticipates an approach to surge conditions from its sensing of the compressor inlet flow, pressure rise and rotational speed.

The compressor shaft is supported on two bearings, lubricated from a specially provided oil system. This system pumps oil from an oil tank beneath the compressor and, after filtration and cooling, provides a pressurised supply to the bearings. The oil drains by gravity back to the tank. Duplicate electrically-driven oil pumps are provided, with one pump normally running and one on automatic stand-by duty. Duplicate

oil filters are similarly provided. The oil is cooled by being passed over tubes through which water flows from the common power station and test facility cooling system.

An oil accumulator is provided to store oil under pressure. In the event of the oil pressure falling, the accumulator expels oil into the system, and thus helps to maintain a supply to the bearings. The accumulator sustains bearing oil supply in the event of a pump failure, for the short period before the stand-by pump comes into service. Should both pumps fail, the expander inlet emergency isolating valve closes and the compressor runs down, the accumulator providing lubricating oil during the brief run down period.

In order to prevent oil leaking from the compressor shaft bearings into the main process air circuits, a simple gland or seal arrangement is provided. Between the bearings and the expansion and compression impellers, small cavities or seals are provided, which are pressurised or "packed" with high pressure air. Being at a higher pressure than the process air and the lubricating oil, this seal air tends to leak out into the air circuits and the oil system. But oil is prevented from reaching the main process air circuits.

12.13.2 Transport Air Drier

Contractor - PALL (UK) Ltd.
Contract Reference No. - YCE 24/10704
Date Let - 30th May, 1978

The air drawn from the atmosphere contains a certain amount of moisture as invisible water vapour. When the air is compressed, and cooled, the amount of water vapour which the air can "carry" as vapour decreases. The air discharged by the booster compressor after-cooler would therefore appear relatively "wetter" to the fuel injection system than the air drawn from the atmosphere by the compressors. Since the atmosphere in England contains quite large amounts of water vapour, the air supplied to the fuel injection system would be relatively "wet" if special air drier equipment were not supplied.

Air drier equipment is therefore provided between the booster compressor after-cooler and the fuel injection system, to prevent any blockage of the small tubes in the injection system with particles of wet coal.

This equipment operates by passing the compressed air through a chamber filled with loosely packed granules of alumina. In passing up through the chamber, the moisture in the compressed air is absorbed by the alumina. Two separate chambers are provided, each filled with the alumina drying medium or "dessicant". When the alumina in one chamber approaches saturation, the flow of compressed air can be switched over to flow through the second chamber. The alumina in the first chamber is then prepared to be used again

(or "regenerated") by being dried.

The regeneration of the alumina is carried out by passing a small flow of dry purge air through the chamber, under vacuum. When the alumina has been regenerated, the compressed air flow is switched back to the first chamber, and the second chamber regenerated.

The switching over of the compressed air and purge air flows between the two chambers is regulated by inlet and purge air flow selector valves. These valves are opened and closed by automatic control equipment supplied by PALL.

The flow of damp compressed air into the PALL equipment is routed through one of the dessicant chambers by the opening of one of the inlet selector valves. The chamber which is under regeneration is evacuated by the action of a steam-driven ejector. A small flow of purge air passes through the regenerating chamber, drying the alumina, and is discharged to the atmosphere by the ejector. The purge air supply is taken from the dry compressed air discharged by the other chamber, which is in service as a drier. In order to reduce the purge air supply to the pressure of the vacuum in the regenerating chamber, the purge air supply is reduced by passing through a flow restricting orifice. This pressure reduction makes the already dry purge air supply appear even drier, in relative terms, to the alumina in the regenerating chamber.

At the end of the regeneration the alumina has been dried, but the chamber is under vacuum. If the inlet flow selector valve were to be opened, the compressed air would enter the chamber violently, and could damage the alumina granules or to blow them out of the chamber. A repressurising connection is therefore provided to pressurise the chamber with air from the discharge line, before the inlet selector valve is opened.

The flow selector and control valves are operated by a control system supplied by PALL, and housed in a small local control panel mounted on the front of the air drier set. The control system operates from a timer.

A complete cycle of using first one chamber, and then the other, for drying, while at the same time regenerating the chamber not in service, takes about 10 minutes. During the 10 minute cycle, each chamber is under regeneration for approximately 4 minutes.

The flow selector and control valves are opened and closed by actuators driven by compressed air from the instrument air system.

The control system transmits its control commands to the flow selector valves by operating small electrically operated valves in the instrument air supply lines to the flow selector valve actuators. The instrument air supply to the valve actuators is thus switched on and off as necessary to open and close the selector valves.

The control equipment includes three alarm lights on the local control panel. If any one of these alarms "comes up", a single alarm "AIR DRIER FAULT" is raised in the main test facility control room. The three alarms are:-

(i) Switching failure. This indicates that the sequence of changing over compressed and purge air flows between chambers has operated incorrectly.

(ii) High humidity. The drier is no longer removing sufficient moisture from the discharge air.

(iii) High "delta P". There is too much loss in compressed air pressure across the drier set due to some flow restriction. "Delta P" is a common term for pressure difference, a high delta P indicating a high pressure difference across the drier set and therefore a high loss in compressed air pressure.

## 13. Condensate Polishing Plant

Contractor - Dewplan (W.T.) Ltd.
Contract Reference No. - YCE 24/9-78
Date Let - 22nd November, 1977

### 13.1 General Description

The condensate polishing plant contract provides for the detailed design manufacture and erection of plant to provide boiler feed water of a quality acceptable in a once through boiler.

General design details for the condensate polishing plant are described below.

### 13.2 Polishing Plant

The condensate polishing plant functions to process the condensate from the combustor and heat exchanger steam water circuit, to re-deliver to the system within the specification given in Table 10. The system is composed of four principle elements, i) Mixed bed ion exchange units, ii) Ion exchange resin regeneration system, iii) Deaerator, iv) Sodium sulphite dosing. Description of the plant is given under these headings.

#### Mixed Bed Ion-Exchange Units

Two mixed bed units are provided, operating in parallel with one unit capable of performing the demineralising duty at full flow. Each vessel is 1676mm (5ft 6ins) diameter by 2134mm (7ft) height overall, fabricated from mild steel, rubber lined, containing $1.2m^3$ ($42.4ft^3$) of Amberlite IR200C cation exchange resin and $1.5m^3$ ($53ft^3$) of Amberlite IRA900C anion exchange resin, sufficient to process at the inlet specification given in Table 10, $6336m^3$ ($21 \times 10^4 ft^3$) at a continuous rate of $88m^3/h$, ($3106ft^3/h$) or $100m^3/h$ ($3530ft^3/h$ at maximum.

The mixed bed unit vessels are manufactured to BS5500 Class III, and contain a central and an upper distribution to facilitate the regeneration process, together with the necessary backwash, air release, control valves, pressure gauges and conductivity probe.

#### Regeneration System

The ion exchange regeneration system has four stages, a) separation of the bed to interface at the central distribution, b) acid regeneration c) alkali regeneration, d) bed mixing. Control of the process will be automatic, initiated by manual command.

Bed separation is achieved by passing an upward current of water through the bed, delivered from a Worthington-Simpson 50CR 125 backwash pump.

| | A INLET | A OUTLET | B | UNITS |
|---|---|---|---|---|
| Flow | 25.4 | - | | kg $sec^{-1}$ |
| Pressure | 5.5 | ≮ 3.5 | | bar abs |
| Oil | | | 0.03 | mg/kg |
| Temp | 40 max. | - | | $^{o}C$ |
| Total Hardness | 1.0 | zero | zero | mg/l as Ca Co3 |
| Total Alkalimity | 2.0 | - | | mg/l as Ca Co3 |
| Conductivity | - | ≮ 0.10 | | micromhos |
| T.D.S. | 5.0 | $5 \times 10^{-5}$ | | mg/l |
| KMnO4 | | | 5.0 | mg/kg |
| $NaHo_4$ | | - | 5.0 | mg/kg |
| CO | | | zero | |
| CO2 | 0.1 | 0.1 | zero | mg/l |
| Cu | | | $2.0 \times 10^{-3}$ | mg/kg |
| Fe | 0.1 | - | $2.0 \times 10^{-2}$ | mg/l |
| $O_2$ | | | $2.0 \times 10^{-2}$ | mg/kg |
| Si | 0.1 | 0.1 | $2.0 \times 10^{-2}$ | A mg/kg B mg/l |

Table 10

A. Required Duty of Condensate Polishing Ion-exchange Bed

B. Water Quality Required at Outlet from De-aerator Storage Tank

NCB (IEA Grimethorpe) Ltd.
Pressurised Fluidised Bed
Combustion Project
Grimethorpe Experimental Facility

Table 9

Acid is supplied from an acid storage tank, filled by a vacuum system from delivered carbouys, to an acid dilution tank in volumetrically measured quantities. The dilution tank is mild steel, rubber lined, and of sufficient size to hold dilute acid for four regenerations. From the dilution tank the regeneration acid is injected into the ion exchange bed via the central distributor, and withdrawn from the bottom outlet. Hydrochloric Acid (HCl) is to be used as the regenerative acid.

Alkali as caustic soda (NaOH) is similarly supplied, stored and injected during the regeneration process as the acid system, except that injection is via an upper distributor, with the outflow via the central distributor. The alkali (caustic) dilution tank holds sufficient bulk for two regenerations.

To complete the regeneration process, rinsing of the resin bed is required, and is supplied from a reserve feed tank via the backwash pumps, the total regeneration effluent being dumped into a suitable sump.

Bed mixing is achieved by passing air through the resin bed via the ion exchange vessel bottom air inlet. Turbulence caused by the passage of air through a partially filled water suspended resin mass, is sufficient to induce mixing.

Deaeration

The steam water condensate, having been demineralised, passes to a 'Stork Deaerator', type 75 (manufactured under licence from Machine Fabrick Store, Holland), providing feed water having an oxygen content 0.02ppm, when operating between 10-110 full load. See table 10. The deaerator operates by the cascading of atomised condensate against baffles in a counter flow of steam. The deaerator has sufficient capacity for 15 mins supply.

Sodium Sulphite Dosing

The final stage of processing the steam water condensate is to dose with Sodium Sulphite at the outflow from the deaerator, stored in a 22 litre (4.84 gallons) polythene storage tank and delivered by a proportional flow dosing pump at between 0 - 4 $lhr^{-1}$ (0-0.88gall. $hr^{-1}$) at 20 psig.

## 13.3 Instrumentation and Pipework

This contract also provides for all necessary valves and instruments and safety systems necessary for the safe automatic operation of the condensate polishing plant, together with all necessary pipework to complete the system.

## 14. CIVIL WORKS

Contractor - Miller Construction
Contract No. - YCE 24/7871
Date Let - 22nd July, 1977

### 14.1 General Description

The civil work contract provides for the design and construction of, i) the main plant buildings, and ii) the control building.

### 14.2 Main Plant Building

The main plant building is 51m (167ft 3.4ins) long by 19m (62ft 4ins) wide and 30m (98ft 5ins) high, and is built on a reinforced concrete piled foundation, founded between 7 metres to 11 metres (23ft to 36ft) below surface datum upon weathered siltstone. The building is supported by a system of reinforced concrete ground beams bearing on the piles, over which a reinforced concrete slab is lain, whose top surface is 1m (3ft 3ins) below surface datum. This top surface supports a 1 m (3ft 3ins) thick concrete fill, in which all trenchwork carrying the underground services is located. The building structure consists of a braced box structural steel frame using 'autofab' columns and castellalated roof beams. The cladding consists of a brick work up to a height of 5m (16ft 5ins) above which are continuous ventilation louvres operated from ground level by compressed air. The structure is clad in colour coated profiled galvanised steel sheeting backed by a foil backed white plastic faced insulated plaster board. 'Unilux' reinforced polyester clear panels are incorporated in the walls. Manually operated roller shutter doors are installed at each end of the southern elevation. The roof has a continuous ridge vent equipped with fusable links to act as smoke vents opening in the event of fire. Building heating is from the existing power station boilers. There is no structural integrity between the power station building and the main plant building.

### 14.3 The Control Building

The control building is 15m (49ft 2ins) by 19m (62ft 4ins) by 9m (29ft 6ins) high, and is built onto the western end of the main plant building and between the ground floor mezzanine and the first floor are housed the following utilities, the switch room, battery rooms and transformer rooms which are situated on the ground floor, the cable flat and storerooms which are situated on the mezzanine, and the instrument workshop, offices, equipment rooms and control room which are situated on the first floor. In February, 1978, following a decision of the Executive Committee, the contractor was instructed to build a third storey onto the control building.

The construction is a total reinforced concrete frame resting on a piled foundation. The walls are of a cavity brick construction with aluminium sliding windows. Heating is from the power station boilers, with the control room having air conditioning, and the battery room having forced ventilation. The flat roof of the control building supports the turbo-compressor air inlet. Both the control room and the cable flat have direct access to the main plant building.

## 15. CHIMNEY

Contractor - Bierrum and Partners Ltd.
Contract Reference No. YCE 24/7872
Date Let - 21st November, 1977

### 15.1 General Description

The chimney permits the exhaust gases from the combustor to be discharged clear of the site. It is 92m (301ft) high, 6m (19ft 8ins) diameter at the base tapering to 3m (9ft 10ins) diameter at the top, and is similar to the existing power station chimney. The chimney is of reinforced concrete construction and is lined internally with 'Fosalsil' diatromaceous earth bricks, with the top 5m (16ft 5ins) completed in an acid resisting brick.

# 16. CRANE

Contractor - Demag Material Handling Ltd.
Contract Reference No. - YCE 24/8437
Date Let - 20th May, 1977

## 16.1 General Description

The contract provides for the supply of an overhead gantry crane to be used during lifting and carrying operations of any items of plant needing to be moved during maintenance, inspection or alterations. (See figure 1). It is not intended that the crane be used during the erection of the plant since many of the weight loads will be in excess of the design weight capacity of the crane.

## 16.2 Crane Specifications

The crane is equipped with a main hoist and an auxiliary hoist, and will run on long travel rails running the length of the building, with cross travel supported upon the crane carriage. Operation is either from the cab, using a joystick, or by radio control. The specification is given in Table 11.

Table 10

| | | | Metric | Imperial | Remarks |
|---|---|---|---|---|---|
| Crane | Weight | Carrying Capacity | 40 tonnes | 44 tons(Short) | Intermittent 8 hour day |
| | | Equip. Weight | 3200 kg | 7056 lbs | |
| | Carriage | Wheelbase | 6200 mm | 20ft 4ins | |
| | | Wheel Load Max. | 28.5tonnes | 31.4 tons (Short) | |
| Rails | Long Travel | Length | 50,000 mm | 164ft. | |
| | | Rail Centres | 16775 mm | 55ft. | |
| | | Speed/Time | 34m/8.5min | 111ft 6ins/8.5 mins. | |
| | | Floor Clearance | 25,500mm | 83ft 8ins | |
| | Cross Travel | Length | 14,275mm | 46ft 10ins | |
| | | Rail Centres | 4500mm | 14ft 9ins | |
| Ramshorn Hook | | Max. Load | 40 tonne | 44 tons(Short) | DIN 15020 |
| | Clearances | Floor/Hook Centres | 24,750 mm | 81ft 2ins | |
| | | Left | 1300mm | 4ft 3ins | |
| | | Right | 1200mm | 3ft 11ins | |
| | | To Aux.Hoist | 1400mm | 4ft 7ins | |

Table 11
Specification of Demag Crane

NCB (IEA Grimethorpe) Ltd.
Pressurised Fluidised Bed
Combustion Project
Grimethorpe Experimental Facility.

## APPENDIX I

### Standards for the Construction of the Grimethorpe Experimental Facility

Any plant built in the United Kingdom must comply with the provisions of the Health and Safety at Work Act before it can be operated. The owners/operators must convince the Government's Factory Inspectorate that the plant is safe. In practice this means that the construction of the plant must comply with the relevant regulations of the British Standards Institution or their equivalent. The Operating Agent has retained the services of the engineering department of the Cornhill Insurance Company to oversee the design of the Facility to ensure that it complies with the provisions of the Health and Safety at Work Act and is therefore insurable.

For pressure vessels, the equivalent standards are as follows:

a) The pressure vessels in the supply of Petrocarb International Inc., are manufactured to ASME 8 Div. 1.

b) The pressure vessels in the supply of Head Wrightson Process Engineering Ltd., are manufactured to BS5500 (1976).

c) The pressure vessels in the supply of Vereinigte Kesselwerke Aktiengesellschaft are manufactured to the requirements of the 'Technische Regeln fur Druckbehaelter'. These are the regulations of an Institution established in West Germany to set standards for the construction of boilers. The work is additionally subject to inspection by another independent institution, the 'Technischen Uberwachungsverein E.V.'.

For pressure pipework and flanges, the equivalent standards are:

| | DIN | BS | ASTM |
|---|---|---|---|
| Pipes | st 35.8 | 3602HFSGR23 | A 106GRA |
| | st 45.8 | 3602HFSGR27 | A 106GRB |
| Flanges | C228 | 1503-161-GRA | A 105 |
| | 15 Mo 3 | - | T1-A-161 |

As a guide to metal analysis, Table A.3.1 compares some metals being used in the Facility.

The Instrumentation and Control Specification calls for DIN standard or better,which is comparable with API - RP 550.

The Division 2 hazardous area classification to UK CP 1003 Part 1 1964 and BS 4683 is comparable to API - RP 500 B which is a supplement of the National Electrical Code Article 500.

Table A.3.1

| DIN | B.S. | ASTM |
|---|---|---|
| ST 35.8 | 3602 HFS Gr.23<br>(Hot finished Seamless c/s. pipes) | A 106 Gr. A |
| ST 45.8 | 3602 HFS Gr. 27 | A 106 Gr. B |
| 15 Mo 3<br>C 0.12 - 0.20%<br>Mo. 0.25 - 0.35%<br>(Continuous operating Conditions up to 530°C Tube Temp) | No comparable British Steel | A 335 P1 is Comparable to 16Mo 5<br>0.12 - 0.20<br>0.45 - 0.65 |
| 10 Cr Mo 9 10<br>C 0.15% Max<br>Cr 2.0 - 2.5%<br>Mo 0.9 - 1.1% | 3604 HF 622<br>0.08 - 0.15%<br>2.0 - 2.5%<br>0.9 - 1.2% | A 335 Gr. P22 |
| 13 Cr Mo 44<br>C 0.10 - 0.18%<br>Cr 0.7 - 1.0%<br>Mo 0.40 - 0.50% | 3604 HF 620<br>0.15% max<br>0.7 - 1.1% | A 335 Gr. P12 |
| X 20 Cr Mo V 121<br>This is a martensite-ferrite steel (for Pressures at 500 - 630°C)<br>C 0.17 - 0.23%<br>Cr 11.0 - 12.5%<br>Ni 0.30 - 0.80%<br>Mo 0.80 - 1.20%<br>Mn 0.30 - 0.80%<br>Si 0.10 - 0.50%<br>V 0.25 - 0.35% | No Comparable<br>S/S Type 414<br>0.15%<br>11.5 - 13.5%<br>1.25 - 2.5%<br>-<br>1%<br>1% | British or American |

☆ U.S. GOVERNMENT PRINTING OFFICE: 1984-746-081/10092