6A

PNL-5221

UC-41

Lung-Clearance Classification of Radionuclides in Calcined Phosphate Rock Dust

D. R. Kalkwarf
P. O. Jackson

August 1984

Prepared for
the U.S. Environmental Protection Agency
under a Related Services Agreement
with the U.S. Department of Energy
Contract DE-AC06-76LO 1830

Pacific Northwest Laboratory
Operated for the U.S. Department of Energy
by Battelle Memorial Institute

Battelle

PNL-5221

DISCLAIMER

This report was prepared as an account of work sponsored by an agency of the United States Government. Neither the United States Government nor any agency thereof, nor any of their employees, makes any warranty, express or implied, or assumes any legal liability or responsibility for the accuracy, completeness, or usefulness of any information, apparatus, product, or process disclosed, or represents that its use would not infringe privately owned rights. Reference herein to any specific commercial product, process, or service by trade name, trademark, manufacturer, or otherwise, does not necessarily constitute or imply its endorsement, recommendation, or favoring by the United States Government or any agency thereof. The views and opinions of authors expressed herein do not necessarily state or reflect those of the United States Government or any agency thereof.

PACIFIC NORTHWEST LABORATORY
operated by
BATTELLE
for the
UNITED STATES DEPARTMENT OF ENERGY
under Contract DE-AC06-76RLO 1830

Printed in the United States of America
Available from
National Technical Information Service
United States Department of Commerce
5285 Port Royal Road
Springfield, Virginia 22161

NTIS Price Codes
Microfiche A01

Printed Copy

Pages	Price Codes
001-025	A02
026-050	A03
051-075	A04
076-100	A05
101-125	A06
126-150	A07
151-175	A08
176-200	A09
201-225	A010
226-250	A011
251-275	A012
276-300	A013

PNL-5221
UC-41

3 3679 00058 0276

LUNG-CLEARANCE CLASSIFICATION OF RADIONUCLIDES IN CALCINED PHOSPHATE ROCK DUST

D. R. Kalkwarf
P. O. Jackson

August 1984

Prepared for the
U.S. Environmental Protection Agency
under a Related Services Agreement
with the U.S. Department of Energy
Contract DE-AC06-76RLO 1830

Pacific Northwest Laboratory
Richland, Washington 99352

SUMMARY

Lung-clearance classifications for ^{210}Pb and ^{210}Po in airborne dust from elemental phosphorus plants were estimated for use with the lung clearance model proposed by the ICRP Task Group on Lung Dynamics. Estimates were based on measurements of dissolution rates for these radionuclides from sized dust samples into simulated lung fluid at 37°C. The estimates were expressed in the classification terms of the model, i.e., D, W and Y, indicating lung clearance half-times of 0 to 10 days, 11 to 100 days and more than 100 days. Dust samples were obtained from two plants in the western United States, and dissolution trials were conducted on fractions containing particles with aerodynamic equivalent diameters (AED) of 0 to 3 μm and of 3 to 10 μm. The ^{210}Pb and ^{210}Po in each of these fractions were classified 100% Class Y. The specific activities of both radionuclides increased with decreasing AED of the particles.

CONTENTS

SUMMARY ii

ABBREVIATIONS AND SYMBOLS v

INTRODUCTION 1

CONCLUSIONS AND RECOMMENDATIONS 2

MATERIALS AND METHODS 3

DESCRIPTION OF SAMPLES 3

DISSOLUTION TRIALS 3

ANALYTICAL METHODS 5

CLASSIFICATION TECHNIQUE 5

RESULTS 7

SPECIFIC ACTIVITIES 7

DISSOLUTION TRIALS AND CLASSIFICATIONS 8

OISCUSSION 11

REFERENCES 12

ACKNOWLEDGEMENT 13

FIGURES

1. Cross-Section of Dissolution Chamber 4

TABLES

1. Specific Activities of ^{210}Pb and ^{210}Po in the Dust Samples at Their Collection Time 7

2. Dissolution Pattern of ^{210}Pb and ^{210}Po from Dust Samples into Simulated Lung Fluid at 37°C 8

3. Comparison of ^{210}Pb and ^{210}Po Activities in Particles at the Beginning and End of Their Dissolution Trials 9

4. Dissolution Parameters for ^{210}Pb and ^{210}Po in the Dust Samples 10

LIST OF ABBREVIATIONS AND SYMBOLS

ABBREVIATIONS

AED - aerodynamic equivalent diameter

°C - degrees Celcius

ICRP - International Commission on Radiological Protection

meq/L - milliequivalents per liter

mL - milliliters

SLF - simulated liquid fluid

μm - micrometers

SYMBOLS

^{210}Pb - lead isotope with atomic mass 210

^{210}Po - polonium isotope with atomic mass 210

INTRODUCTION

Uranium, thorium and their radioactive decay products are present at low concentrations in minerals used to produce elemental phosphorus (Roessler et al. 1979, Johnson et al. 1980). When these minerals are calcined, component radionuclides that can form volatile compounds at the high temperatures of the kiln evaporate and, on cooling, condense on any available surface. Part of this condensation occurs on airborne dust passing out of the kiln stack; and since the smaller particles generally have the highest specific surface area, volatile radionuclides are expected to concentrate on them. In particular ^{210}Pb and ^{210}Po, have been reported to concentrate on the smaller particles of coal fly ash (Mc8ride et al. 1978, Kalkwarf et al. 1984). Also, small particles are deposited efficiently in the lungs; and if radioactive, they may pose a source of radiation damage to persons exposed to this dust (Miller et al. 1979).

The radiation dosimetry for radionuclides deposited in the lungs can be evaluated with the aid of the lung-clearance model proposed by the Task Group on Lung Dynamics of the International Commission on Radiological Protection (ICRP Task Group on Lung Dynamics 1966). Use of this model requires clearance-rate classifications for the radionuclides, and three categories are used: D, W and Y, corresponding to lung clearance half-times of 0 to 10 days, 11 to 100 days and greater than 100 days, respectively.

This study was conducted at the request of the U.S. Environmental Protection Agency to estimate the lung-clearance classifications for ^{210}Pb and ^{210}Po in airborne dust from elemental phosphorus plants. Clearance-rate classifications were estimated by measuring dissolution half-times of the radionuclides from sized dust samples into simulated lung fluid at 37°C, the normal temperature of the human body. The rationale for this approach has been discussed elsewhere (Kalkwarf et al. 1984). Samples from the FMC plant, Pocatello, Idaho, and from the Stauffer Chemical Corporation plant, Silver Bow, Montana, were analyzed. Dissolution trials were conducted on sample fractions containing particles with aerodynamic equivalent diameters in the ranges 0 to 3 μm and 3 to 10 μm, because such particles are deposited most efficiently in the lungs.

CONCLUSIONS AND RECOMMENDATIONS

The dissolution rates of ^{210}Pb and ^{210}Po in samples from both the FMC and Stauffer plants were very similar, and very slow. It is recommended that both ^{210}Pb and ^{210}Po be considered 100% Class Y substances for calculations with the ICRP Lung-Clearance Model.

MATERIALS AND METHODS

DESCRIPTION OF SAMPLES

The samples of phosphate rock dust were received from Radian Corporation, Research Triangle Park, North Carolina 27709. They had been collected by Radian personnel at the FMC plant in Pocatello, Idaho, on October 27, 1983 and at the Stauffer Chemical Corporation plant, Silver Bow, Montana on November 10, 1983. These samples were collected in the off-gas streams from the calciners prior to their entry into wet scrubber units, because the dust loadings in the streams at these points were relatively high. A Source Assessment Sampling System (SASS) was used to collect the samples (Blake 1978). This system separated the samples into fractions containing particles with aerodynamic equivalent diameters (AED) in the size ranges of 0 to 1 μm, 1 to 3 μm, 3 to 10 μm, and greater than 10 μm. The fractions were dried and weighed by Radian personnel and mailed to the Pacific Northwest Laboratory (PNL). In order to obtain sufficient amounts of material for the dissolution trials at PNL, fractions with particles in the two smaller size ranges were combined in the same proportions by weight as were obtained in the original collections.

DISSOLUTION TRIALS

The dissolution trials were conducted on dust fractions containing particles with AED's in the ranges: 0 to 3 μm and 3 to 10 μm. A 0.5000-g portion of dust was weighed and placed in a 10-mL glass vial with a conical bottom and a Teflon-lined, screw cap (Reacti-Vial, Pierce Chemical Co., Rockford, IL). The vial and contents were placed in an aluminum constant-temperature block (Reacti-Therm, Pierce Chemical Co.) maintained at 37°C and equipped with a magnetic stirrer. A 5-mL portion of simulated lung fluid (SLF) was added to the vial together with a Teflon-coated triangular magnetic bar to suspend the particles in the SLF. This assembly is shown in Figure 1. The composition of the SLF has already been published (Moss 1979) and closely resembles that of human interstitial fluid. After one day, the suspension was filtered, and the particles were resuspended in 5 mL of fresh SLF for an additional time period. This procedure was repeated at selected times for a total period of 60 days.

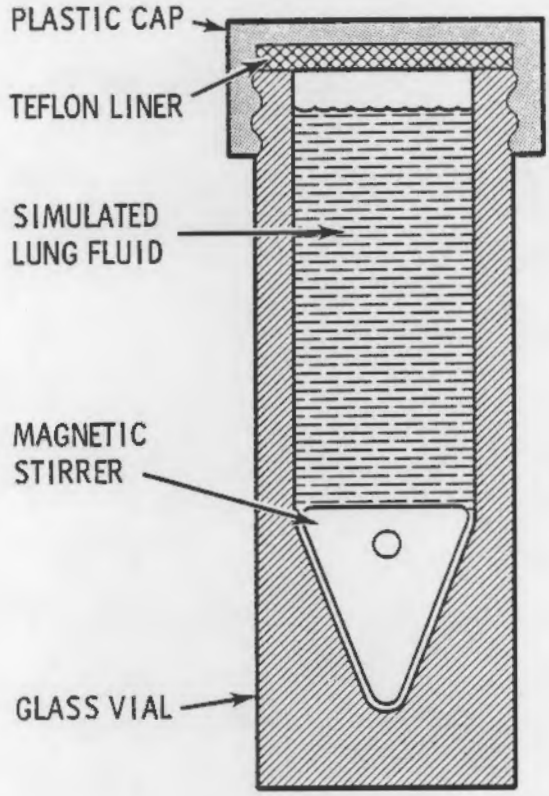

FIGURE 1. Cross-Section of Dissolution Chamber

The pH's of the suspensions were tested every three days and, if necessary, readjusted to within the range 7.3 to 7.4 by addition of small volumes of hydrochloric acid. The filtration operation consisted of several steps. First the suspension was centrifuged in the vial to pack most of the particles into the conical bottom. The supernatant liquid was then filtered through a 13-mm diameter membrane filter (Millipore GS) with a 0.22-μm pore size. Particles adhering to the filter were washed back into the dissolution vial with 5 mL of fresh SLF. A detailed description of this technique has been published elsewhere (Kalkwarf 1983). The filtered samples of SLF were stored in glass screw-capped vials until they were analyzed. At the end of the 60-day dissolution period, the residual particles were also transferred to glass screw-capped vials for analysis.

ANALYTICAL METHODS

Samples of the original dust fractions, the filtered solutions from the dissolution trials and the undissolved particles remaining after the dissolution trials were analyzed for ^{210}Pb and ^{210}Po. The specific activities of ^{210}Pb in the solid samples were measured with a high-resolution, intrinsic-germanium, gamma-ray spectrometer. The samples were placed in small plastic vials for analysis, and the measurements were calibrated with ^{210}Pb-spiked soil samples packed in the same geometry.

Measurement of the specific activities of ^{210}Po in the solid samples required dissolution of the particles in mixtures of perchloric, nitric, hydrofluoric and hydrochloric acids. ^{210}Po activity was measured by alpha counting after deposition of the polonium on a silver disc (Jackson and Thomas 1981). In order to correct for the radiochemical yield and counter efficiency, a measured quantity of ^{208}Po was added to each sample prior to dissolution; and the ratio of the activities of ^{208}Po and ^{210}Po were measured on an alpha-particle spectrometer with a silicon surface-barrier diode.

The activities of ^{210}Pb and ^{210}Po in the SLF solutions were determined following their sequential chemical separation (Jackson and Thomas 1981). The portion containing the separated ^{210}Pb was allowed to stand for about two months to allow ingrowth of ^{210}Po, and both portions were analyzed for ^{210}Po as described in the preceding paragraph. The specific activities of ^{210}Pb were calculated from the ^{210}Po values using the appropriate radioactive ingrowth equations.

CLASSIFICATION TECHNIQUE

The lung-clearance model proposed by the ICRP Task Group on Lung Dynamics assumes that the fraction of radionuclide remaining in the lungs can be expressed as an exponential function of time. If a radionuclide is present in more than one physical or chemical form and dissolution is the dominant clearance pathway, a sum of exponential terms is generally required to express the fraction remaining undissolved. Therefore, data from the dissolution trials were fitted to equations of the form:

$$F = \sum_i f_i \exp(-0.693\ t/T_i)$$

where F is the fraction of radionuclide remaining undissolved after time t, and the f_i are the initial weight fractions of the various forms of this radionuclide with dissolution half-times T_i. The values of F were calculated by subtracting the amount of radionuclide dissolved during any sampling period from the amount undissolved at the beginning of that period and dividing this quantity by the initial amount of radionuclide in the sample. The latter quantity was measured by analysis of a separate portion of sample and was verified by summing the amounts of dissolved and undissolved radionuclide during the dissolution trial. Values of f_i and T_i were obtained by graphical analysis of the data. The lung-clearance half-time of the radionuclide was then assumed to be equal to its dissolution half-time in simulated lung fluid.

RESULTS

SPECIFIC ACTIVITIES

The specific activities of ^{210}Pb and ^{210}Po in the dust samples at the time of their collection at the stacks are listed in Table 1. The values have been corrected for radioactive decay of ^{210}Pb and radioactive build-up and decay of ^{210}Po between the collection time and the time of analysis. Samples collected at the FMC plant were designated by the prefix, FMC; and those collected at the Stauffer Chemical Corporation plant were designated with the prefix, SCC.

TABLE 1. Specific Activities of ^{210}Pb and ^{210}Po in the Dust Samples at the Collection Times (95% confidence intervals)

Sample Designation	Specific Activity of ^{210}Pb (pCi/g)	Specific Activity of ^{210}Po (pCi/g)
FMC, 0-3 μm	$(6.7 \pm 0.6) \times 10^2$	$(9.5 \pm 0.6) \times 10^4$
FMC, 3-10 μm	39 ± 4	$(3.9 \pm 0.2) \times 10^3$
FMC, >10 μm	21 ± 2	$(2.4 \pm 0.2) \times 10^2$
SCC, 0-3 μm	$(3.8 \pm 0.3) \times 10^3$	$(2.0 \pm 0.2) \times 10^3$
SCC, 3-10 μm	$(3.5 \pm 0.3) \times 10^3$	$(1.6 \pm 0.2) \times 10^3$
SCC, >10 μm	$(4.7 \pm 0.1) \times 10^2$	$(1.4 \pm 0.1) \times 10^3$

The specific activities of ^{210}Pb and ^{210}Po were found to increase with decreasing AED of the particles, but this effect was more pronounced at the FMC plant.

It is important to be aware that the distribution of radionuclides by particle-size range as shown in Table 1 is representative only of the distribution of radionuclides which are associated with particles in the off-gas streams at the locations sampled. Because of the relatively high temperatures (250-350°C) of the off-gas streams at the scrubber inlet sampling locations, some of the ^{210}Po may still have been in the vapor state (i.e., not condensed onto particles) and therefore not collected by the SASS train. This may explain the large differences in the specific activities of ^{210}Po in the 0 to 3 μm fractions from the FMC and Stauffer plants. More detailed information on

the particle size distribution of these radionuclides in calciner off-gas streams is presented in EPA's emission test reports for these plants (EPA Office of Radiation Programs 1984a, 1984b).

DISSOLUTION TRIALS AND CLASSIFICATIONS

The results of the dissolution trials on the dust samples are shown in Table 2. Values for the specific activity of ^{210}Pb in the samples at the start

TABLE 2. Dissolution Pattern of ^{210}Pb and ^{210}Po from Dust Samples into Simulated Lung Fluid at 37°C

Sample	Initial ^{210}Po Activity (pCi/g)	Dissolution Time (days)	Fraction of ^{210}Pb Remaining Undissolved	Fraction of ^{210}Po Remaining Undissolved
FMC, 0-3 μm	$(8.5 \pm 0.5) \times 10^4$	1.0	0.9984	0.9997
		3.0	0.9973	0.9990
		10.0	0.9968	0.9984
		20.2	0.9962	0.9980
		37.0	0.9956	0.9979
		59.0	0.9950	0.9978
FMC, 3-10μm	$(3.6 \pm 0.2) \times 10^3$	1.0	0.9933	0.9991
		3.0	0.9744	0.9988
		10.0	0.9682	0.9979
		20.2	0.9618	0.9970
		37.0	0.9554	0.9943
		59.0	0.9490	0.9914
SCC, 0-3 μm	$(1.8 \pm 0.2) \times 10^3$	1.0	0.9999	0.9997
		2.9	0.9999	0.9996
		8.9	0.9994	0.9989
		20.8	0.9991	0.9986
		40.8	0.9983	0.9981
		59.0	0.9978	0.9980
SCC, 3-10 μm	$(1.3 \pm 0.2) \times 10^3$	1.0	1.0000	0.9997
		2.9	0.9999	0.9993
		8.9	0.9990	0.9992
		20.8	0.9991	0.9948
		40.8	0.9985	0.9942
		59.0	0.9979	0.9940

of the dissolution trials were essentially the same as those listed in Table 1, due to the long, 20-year half-life of this radionuclide. However, the specific activities of ^{210}Po in the samples changed between the collection time and the start of the dissolution trials due to the combined effects of radioactive build-up and decay. The specific activities of ^{210}Po at the start of the dissolution trials are listed in Table 2. As can be seen from Table 2, very little ^{210}Pb or ^{210}Po were dissolved during the 60-day period of the trials.

The insolubilities of ^{210}Pb and ^{210}Po were also tested by comparing their measured specific activities in the solid residues at the end of the dissolution trials with those predicted if no dissolution of these radionuclides had occurred. Such a test was considered desireable since the inability to detect significant amounts of ^{210}Pb and ^{210}Po in the filtrates might have been due to deposition of these radionuclides on the filters or on the walls of the dissolution chamber. The results are shown in Table 3 and tend to confirm the insolubilities of ^{210}Pb and ^{210}Po in simulated lung fluid at 37°C. These data were not used to determine the dissolution rates for the radionuclides because the amounts dissolved would appear as small, imprecise differences between two large numbers.

TABLE 3. Comparison of ^{210}Pb and ^{210}Po Activities in Particles at the Beginning and End of Their Dissolution Trials (95% confidence intervals)

Sample	Initial ^{210}Pb Activity (pCi/g)	Final ^{210}Pb* Activity (pCi/g)	Initial ^{210}Po Activity (pCi/g)	Final ^{210}Po* Activity (pCi/g)
FMC, 0-3 μm	$(6.7 \pm 0.6) \times 10^2$	$(6.2 \pm 0.2) \times 10^2$	$(8.5 \pm 0.5) \times 10^4$	$(8.3 \pm 1.7) \times 10^4$
FMC, 3-10 μm	39 ± 4	42 ± 18	$(3.6 \pm 0.2) \times 10^3$	$(3.0 \pm 0.4) \times 10^3$
SCC, 0-3 μm	$(3.8 \pm 0.3) \times 10^3$	$(3.4 \pm 2.0) \times 10^3$	$(1.8 \pm 0.2) \times 10^3$	$(1.2 \pm 0.9) \times 10^3$
SCC, 3-10 μm	$(3.5 \pm 0.3) \times 10^3$	$(3.1 \pm 1.6) \times 10^3$	$(1.3 \pm 0.2) \times 10^3$	$(0.7 \pm 0.9) \times 10^3$

* Corrected to the starting time of the trial.

The data listed in Table 2 were analyzed graphically to obtain the dissolution parameters for Equation 1 and the values are listed in Table 4. From these data, it was concluded that both ^{210}Pb and ^{210}Po should be considered 100% Class Y for calculations with the ICRP Lung-Clearance Model.

TABLE 4. Dissolution Parameters for ^{210}Pb and ^{210}Po in the Dust Samples

Sample	f	^{210}Pb T (days)	f	^{210}Po T (days)
FMC, 0-3 μm	1.00	8×10^3	1.00	2×10^4
FMC, 3-10 μm	1.00	8×10^2	1.00	5×10^3
SCC, 0-3 μm	1.00	2×10^4	1.00	2×10^4
SCC, 3-10 μm	1.00	2×10^4	1.00	7×10^3

DISCUSSION

The slow dissolution rates of ^{210}Pb and ^{210}Po from calcined phosphate rock dust into SLF are similar to those reported for these radionuclides in uranium-mill tailings and coal fly ash (Kalkwarf 1979, Kalkwarf et al. 1984). The chemical forms of ^{210}Pb and ^{210}Po in these materials are not known; but even if they were present in water-soluble forms, they would probably be transformed rapidly in SLF to insoluble carbonates or hydrous oxides. The concentration of bicarbonate ion in the SLF was 31 meq/L, and the pH was 7.3 to 7.4 (Moss 1979).

REFERENCES

Blake, D. E. 1978. Source Assessment Sampling System: Design and Development. U.S. Environmental Protection Agency Report EPA-600/7-78-018, National Technical Information Service, Springfield, Virginia.

EPA Office of Radiation Programs. 19B4a. Emissions of Lead-210 and Polonium-21D from Calciners at Elemental Phosphorus Plants: FMC Plant, Pocatello, Idaho. U.S. Environmental Protection Agency, Washington, D.C. 20460.

EPA Office of Radiation Programs. 1984b. Emissions of Lead-210 and Polonium-210 from Calciners at Elemental Phosphorus Plants: Stauffer Plant, Silver Bow, Montana. U.S. Environmental Protection Agency, Washington, D.C. 20460.

ICRP Task Group on Lung Dynamics. 1966. "Deposition and Retention Models for Internal Dosimetry of the Human Respiratory Tract." Health Phys. 12:173-207.

Jackson, P. O. and C. W. Thomas. 1981. An Investigation of the Degree of Equilibrium of the Long-Lived Uranium-238 Decay Chain Members in Airborne and Bulk Uranium Ore Dusts. U.S. Nuclear Regulatory Commission Report, NUREG/CR-1895, National Technical Information Service, Springfield, Virginia.

Johnson, R., C. M. Wai, B. McVeety, H. Lee and H. Willmes. 1980. "Uranium in Soil Around Phosphate Processing Plants in Pocatello, Idaho". Bull. Environ. Contam. Toxicol. 24(5):735-738.

Kalkwarf, D. R. 1979. Solubility Classification of Airborne Products from Uranium Ores and Tailings Piles. U.S. Nuclear Regulatory Commission Report, NUREG/CR-053D, National Technical Information Service, Springfield, Virginia.

Kalkwarf, D. R. 1983. "Dissolution Rates of Uranium in Simulated Lung Fluid." Sci. Total Environ. 28:405-414.

Kalkwarf, D. R., P. O. Jackson and J. M. Hardin. 1984. "Lung-Clearance Classification of Radionuclides in Coal Fly Ash." Health Phys. (In press).

Moss, O. R. 1979. "Simulants of Lung Interstitial Fluid". Health Phys. 36:447-448.

Roessler, C. E., Z. A. Smith, W. E. Bolch and R. J. Prince. 1979. "Uranium and Radium-226 in Florida Phosphate Materials." Health Phys. 37(3):269-277.

ACKNOWLEDGEMENT

The authors wish to acknowledge the careful work of G. Brodaczynski and C. Veverka, Jr. in preparing and analyzing the samples for this study.

DISTRIBUTION

No. of Copies	OFFSITE
50	P. Magno Environmental Standards Branch Office of Radiation Programs U.S. Environmental Protection Agency Washington, DC 20460
27	DOE Technical Information Center

No. of Copies	ONSITE
	DOE Richland Operations Office
	H. E. Ransom
19	Pacific Northwest Laboratory
	P. O. Jackson (5) D. R. Kalkwarf (5) R. S. Schirmer N. A. Wogman Publishing Coordination (2) Technical Information (5)