ARI-RR-116
Distribution Categories UC-90g and UC-93

CHARACTERIZATION OF OPEN-CYCLE COAL-FIRED MHD GENERATORS

by

C. E. Kolb, V. Yousefian, J. Wormhoudt, R. Haimes
M. Martinez-Sanchez, and J. L. Kerrebrock

Aerodyne Research, Inc.
Bedford Research Park, Crosby Drive
Bedford, Massachusetts 01730

NOTICE
This report was prepared as an account of work sponsored by the United States Government Neither the United States nor the United States Department of Energy, nor any of their employees, nor any of their contractors, subcontractors, or their employees, makes any warranty, express or implied, or assumes any legal liability or responsibility for the accuracy, completeness or usefulness of any information, apparatus, product or process disclosed, or represents that its use would not infringe privately owned rights

Prepared Under
ERDA Contract No. EX-76-C-01-2478
Period Covered: October 1 - December 31, 1977

Submitted to

Division of Magnetohydrodynamics
U. S. Energy Research and Development Administration

MASTER

January 30, 1978

DISCLAIMER

This report was prepared as an account of work sponsored by an agency of the United States Government. Neither the United States Government nor any agency Thereof, nor any of their employees, makes any warranty, express or implied, or assumes any legal liability or responsibility for the accuracy, completeness, or usefulness of any information, apparatus, product, or process disclosed, or represents that its use would not infringe privately owned rights. Reference herein to any specific commercial product, process, or service by trade name, trademark, manufacturer, or otherwise does not necessarily constitute or imply its endorsement, recommendation, or favoring by the United States Government or any agency thereof. The views and opinions of authors expressed herein do not necessarily state or reflect those of the United States Government or any agency thereof.

DISCLAIMER

Portions of this document may be illegible in electronic image products. Images are produced from the best available original document.

EXECUTIVE SUMMARY

This sixth quarterly technical summary report documents the conclusion of the initial phase of Aerodyne Research, Inc.'s research program on the "Characterization of Open-Cycle, Coal-Fired MHD Generators".

This effort has included theoretical modeling of important plasma chemical effects such as: conductivity reductions due to condensed slag/electron interactions; conductivity and generator efficiency reductions due to the formation of slag-related negative ion species; and the loss of alkali seed due to chemical combination with condensed slag.

A summary of the major conclusions in each of these areas is presented in this report, along with references to more detailed presentations.

A major output of our modeling effort has been the development of an MHD plasma chemistry core flow model. This model has been formulated into a computer program designated the PACKAGE code (Plasma Analysis, Chemical Kinetics, And Generator Efficiency). The PACKAGE code is designed to calculate the effect of coal rank, ash percentage, ash composition, air preheat temperatures, equivalence ratio, and various generator channel parameters on the overall efficiency of open-cycle, coal-fired MHD generators. A complete description of the PACKAGE code and a preliminary version of the PACKAGE user's manual are included in this report.

A laboratory measurements program involving direct, mass spectrometric sampling of the positive and negative ions formed in a one atmosphere coal combustion plasma was also completed during the contract's initial phase. This report summarizes the relative ion concentrations formed in a plasma due to the methane augmented combustion of pulverized Montana Rosebud coal with potassium carbonate seed and preheated air. Positive ions measured include K^+, KO^+, Na^+, Rb^+, Cs^+, and CsO^+, while negative ions identified include PO_3^-, PO_2^-, BO_2^-, OH^-, SH^-, and probably $HCrO_3^-$,

$HMoO_4^-$, and HWO_3^-. Comparison of the measurements with PACKAGE code predictions are presented.

Finally, preliminary design considerations for a mass spectrometric sampling probe capable of characterizing coal combustion plasmas from full scale combustors and flow trains are presented and discussed.

TABLE OF CONTENTS

Section		Page
	EXECUTIVE SUMMARY	iii
1	INTRODUCTION	1-1
2	TECHNICAL PROGRESS SUMMARY	2-1
	2.1 Model Validation and Modification (Task 3)	2-1
	2.2 Laboratory Measurements (Task 5)	2-1
	2.3 Full-Scale Probe Design	2-1
3	MODEL VALIDATION AND MODIFICATION	3-1
	3.1 Objectives and Milestones	3-1
	3.2 Description of MHD Plasma Chemistry Code "PACKAGE"	3-2
	3.3 Summary of Negative Ion Modeling	3-2
	3.4 Slag/Electron Interaction Modeling	3-4
	3.5 Seed/Slag Interaction Studies	3-6
	3.6 Future Modeling Work	3-13
	3.7 References	3-13
4	LABORATORY MEASUREMENTS	3-1
	4.1 Objectives and Milestones	4-1
	4.2 Work Accomplished and Discussion	4-2
	4.2.1 Apparatus Description	4-2
	4.2.2 Neutral Beam Sensitivity - Theory and Experiment	4-28
	4.2.3 Argon Ion Observations	4-35
	4.2.4 Positive Flame Ions	4-45
	4.2.5 Negative Flame Ions	4-49
	4.3 Future Work	4-59
	4.4 References	4-63

Table of Contents (Cont.)

Section		Page
5	PRELIMINARY FULL SCALE MASS SPECTROMETRIC PROBE DESIGN	5-1
	5.1 Objectives and Milestones	5-1
	5.2 Preliminary Design Details	5-2
	5.2.1 Sampling Configuration	5-2
	5.2.2 Pumping Requirements	5-4
	5.2.3 Ion Optics Considerations	5-4
	5.3 Future Work	5-6
	5.4 References	5-6
6	PUBLICATIONS INDEX	6-1

APPENDIX

PRELIMINARY PROGRAM MANUAL

For The

PLASMA ANALYSIS, CHEMICAL KINETICS, AND GENERATOR EFFICIENCY (PACKAGE)CODE

LIST OF ILLUSTRATIONS

Figure		Page
2.1	Contract Milestone Chart	2-2
3.1	Comparison of Pure Component and Solution Condensed Phase Model Concentrations for Si and Al Gas and Condensed Phase Species	3-3
3.2	Comparison of FeO_2^- Concentrations for No Liquid Iron Oxide Phases, $Fe_3O_4(\ell)$ As a Pure Component, and $Fe_3O_4(\ell)$ in Solution With $Al_2O_3(\ell)$, $SiO_2(\ell)$, and $MgSiO_3(\ell)$	3-5
3.3	Time for Slag Drops to Reach a Certain Seed Concentration Monodisperse Flyash Assumed	3-11
4.1	General View of Burner and Mass Spectrometer	4-3
4.2	Coal Burner and Viewport Section	4-6
4.3	Gas Handling Schematic	4-8
4.4	Burner and Channel Insulation	4-10
4.5	Channel Exhaust Section	4-12
4.6	Gate Valve and Exhaust Port	4-13
4.7a	Sampling Cone	4-14
4.7b	Skimmer Cone	4-14
4.8	Ion Optics	4-16
4.9	Ion Optics Voltage Supply Schematic	4-17
4.10	Mass Spectrometer Chamber Gate Valve Plate Assembly	4-19
4.11	Ion Beam Path	4-20
4.12	Block Diagram of Extranuclear Ionizer Control	4-21
4.13	Channeltron Particle Multiplier	4-23
4.14	Triaxial Particle Multiplier Output Circuitry	4-24
4.15	Signal Current Preamplifier and RF Filter Circuits	4-26
4.16	Argon Discharge Ion Source	4-27
4.17	Mass Spectrometer Scan of Modulated Beam of Room Air	4-33
4.18	DC (Unmodulated) Mass Spectrum of Vacuum Chamber Background Gas	4-34
4.19	Mass Spectrum of Room Air, Showing Increased Sensitivity From Adjusting Nozzle - Skimmer Distance	

List of Illustrations (Cont.)

Figure		Page
4.20a	Current at Channeltron With Argon Ion Source Voltage at 700V as a Function of Draw Out Voltage Applied to the Skimmer	4-39
4.20b	Current at Channeltron Particle Multiplier (With No Mass Selection) as a Function of Argon Ion Source Voltage, for a Skimmer Voltage of -168V	4-39
4.21	Current at Channeltron Particle Multiplier (With No Mass Selection) as a Function of Argon Ion Source Voltage, for Voltages of -15V and -30V on the Skimmer	4-40
4.22	Mass Spectrum of Positive Ions Found in a Methane Flame Seeded by Evaporation From the Burner Walls	4-47
4.23	A Mass Spectrum of Positive Ions From a Methane Flame Taken at Higher Resolution Than the Preceding Figure	4-48
4.24	Double Exposure Oscilloscope Photograph of Positive Ion Mass Spectrum With and Without Feeding Potassium-Seeded Coal	4-50
4.25	Mass Spectrum of Negative Ions Found in a Methane Flame Seeded by the Slag and Seed Vaporized From the Burner Walls	4-51
4.26a	Negative Ion Mass Spectrum of Flame With Added CH_3Br	4-53
4.26b	Negative Ion Mass Spectrum of Same Seeded Flame With No Added CH_3Br	4-53
4.27	Mass Spectrum of Negative Ions Found in a Hotter Methane Flame Seeded by the Slag and Seed Vaporized From the Burner Walls	4-54
5.5	Schematic of Sampling System	5-5

1. INTRODUCTION

Coal is a complex chemical substance containing variable amounts of metallic and nonmetallic substances in addition to the desired carbon and hydrogen fuel elements. The purpose of this contract effort is to understand how these nonfuel components of coal will affect the electron and alkali seed chemistry in a high temperature coal combustion system like that envisioned for direct-fired MHD generators.

Three specific problems were considered during this contract period. The first problem area was to characterize the formation of negative ions due to electron attachment processes in the combustion flow. While some stable negative ions may be formed from hydrocarbon combustion species (OH^-), the bulk of the stable negative ions are expected to be formed from oxidized inorganic coal slag constituents (FeO_2^-, PO_2^-, AlO_2^-, etc.). Negative ion formation can reduce the conductivity of the MHD plasma, thus decreasing the efficiency of power generation.

The second problem area involved the role slag condensation may play in determining the electron density through recombination, also adversely affecting conductivity in the core flow. The competitive balance between thermionic emission from slag droplets and electron/ion recombination on the droplet surfaces may be severely tipped in favor of electron loss processes, depending on the slag properties.

The third problem area was the heterogeneous interaction of alkali seed with particles formed by slag condensation in the generator channel. Alkali seed material can be chemically bound into the molten slag particles tightly enough that seed recovery becomes prohibitively expensive. The loss of significant amounts of alkali seed to the slag could have a serious economic impact on proposed MHD systems.

A coupled approach, involving both theoretical modeling and experimental measurements, has been devised to explore the negative ion formation, the electron/slag interaction, and the alkali/slag interaction problems. The overall goal

of the program has been to devise and validate reliable theoretical models which predict the degree of negative ion formation, and the loss of electrons and alkali seed to slag condensation processes for various MHD channel conditions. These models describe the appropriate fluid mechanical conditions expected in direct-fired MHD channels and will permit the calculation, through the appropriate chemical equilibrium or chemical kinetic equations, of the changes in negative ion, alkali and slag conditions as the fluid conditions change.

To date, a one-dimensional model of the fluid dynamic, chemical and MHD processes in the channel core flow has been completed. This model, designated the PACKAGE code, includes subprograms for the calculation of the equilibrium chemical composition and the plasma conductivity at arbitrary stations in the core flow. An extensive literature search to gather information on the structure and thermochemistry of suspected negative ion species has been completed, and thermochemical models of approximately thirty negative ion species have been added to the equilibrium composition code. Formulation of a finite rate description of key chemical kinetic processes has been completed and has been added to the model. Furthermore, a solution model for liquid phase species has also been completed and incorporated into the code.

An additional model predicting core flow slag vapor supersaturation ratios and the detailed interaction of slag condensation nuclei with plasma electrons and ions has been formulated. This modeling effort has identified a potentially serious conductivity loss due to slag droplet catalyzed electron recombination which may seriously affect the back end performance of large scale generators.

Finally an analysis of available slag/seed interaction data, coupled with the modeling of the generator and diffuser flow parameters expected in full scale systems has led to the conclusion that loss of prohibitive amounts of alkali seed due to reaction with molten slag is unlikely.

Results from the modeling efforts have been compared with mass spectrometric measurements of positive and negative ion species sampled from a one-atmosphere pulverized coal burner constructed in our laboratory. This burner was designed to simulate, as closely as possible, temperatures, pressures and seed concentrations expected in prototype, direct-fired MHD channels. Relative concentrations of positive and negative plasma ions due to methane augmented combustion of Montana Rosebud coal with potassium carbonate seed and preheated air have been obtained and compared with PACKAGE code predictions. This experimental data is now being used to modify and validate the code, thus adding confidence to code predictions of full scale generator properties.

A final phase of the effort has been the preliminary design of a mass spectrometric ion and neutral probe which can gather data from MHD channels fired by prototype MHD combustors. Final validation of the negative ion, alkali, and slag models will come from a comparison of model predictions with these prototype measurements.

2. TECHNICAL PROGRESS SUMMARY

During the sixth quarter of effort, the final three technical tasks of the contract's initial phase were completed, as indicated on the Contract Milestone Chart shown in Figure 2.1. The final status of each of these three tasks is summarized below.

2.1 Model Validation and Modification (Task 3)

Major emphases during the past quarter have included the effects of solution models on the level of slag derived negative ions, the modeling of seed/slag interactions coupled with the analysis of available seed/slag interaction data, and the documentation of the PACKAGE code. Results of the first two studies are contained in Section 3, along with a brief summary of the slag/electron interaction modeling reported earlier. A preliminary version of the PACKAGE program documentation is included as an appendix to this report.

2.2 Laboratory Measurements (Task 5)

The laboratory measurements task was completed with the successful sampling of positive and negative ion species found in a one atmosphere plasma produced by methane augmented combustion of pulverized Montana Rosebud with preheated air and potassium carbonate seed. In Section 4, the resulting positive and negative ion data are compared with PACKAGE predictions and needed code improvements are discussed. The final apparatus adjustments and modifications necessary to obtain the coal plasma ion data are discussed in Section 4.

2.3 Full-Scale Probe Design

A preliminary design for a mass spectrometric probe intended to sample ionic and neutral species from full-scale MHD combustors and flow trains is presented in Section 5. Particular emphasis is placed on the fluid dynamic and ion optic aspects of the proposed sampling system.

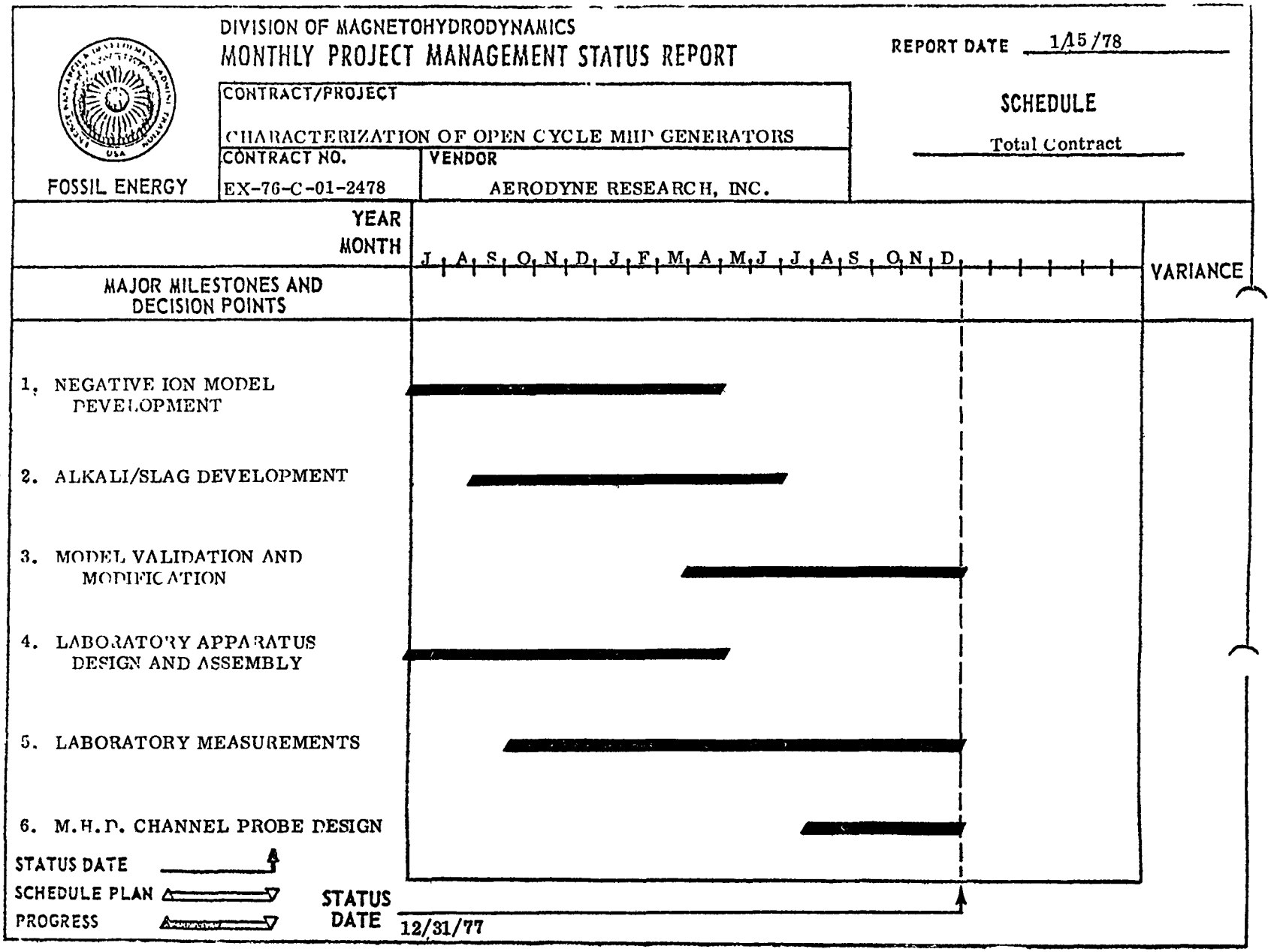

Figure 2.1 Contract Milestone Chart

3. MODEL VALIDATION AND MODIFICATION

3.1 Objectives and Milestones

One main objective in this investigation is to evaluate the effects of the negative ions in the performance of a coal fired open cycle MHD channel. Due to the possible dependence of the negative ion formation on the chemical kinetics of the system a computer model is developed which evaluates the flow properties in the core region of the channel under both equilibrium and partial finite rate conditions.

The following chemical options can be used:

- Total chemical equilibrium with pure condensed species,
- Total chemical equilibrium with condensed ideal solution, and
- Partial equilibrium/partial finite rate chemistry with pure species.

The necessity for developing such models is described, in more detail, in our previous quarterly reports[1 - 5] where we have also discussed calculated results and the predicted effects of negative ions on the performance of an MHD channel.

In this reporting period we have modified our condensed solution model in order to freeze out any species within the ideal solution which has a freezing temperature of 150°K below the solution temperature.

Additional modeling goals have been to elucidate the effect of slag condensation on the equilibrium electron concentration and to understand the degree of alkali seed loss arising from seed reactions with molten slag. A summary of our work on the slag/electron interaction problem is contained in Subsection 3.4, while our seed/slag interaction modeling and analysis of available data is reported in Subsection 3.5.

3.2 Description of MHD Plasma Chemistry Code "PACKAGE"

The building block of our programming effort is the NASA CEC Code[6] which was developed to evalute the equilibrium composition of mixtures with pure condensed species . Numerous changes, in the core of this program, are made in order to adapt to the additional imposed chemical constraints. Furthermore, several routines were added to the program in order to evaluate the plasma conductivity and solve the MHD flow conservation equations.

The details of the modified code are described in Appendix I of this report where we have also documented input/output formats for the PACKAGE program together with instructions for its operation and sample runs.

3.3 Summary of Negative Ion Modeling

As it stands, the NASA CEC[6] code lacks thermodynamic information about many negative ions which can be crucial for this investigation (see a list of these ions in Ref. (2)). We conducted an extensive literature search to collect all information necessary for evaluating the thermodynamic data required by the NASA CEC[6] code. These negative ions were then added to the list of species contained in the code.[1 - 5]

Up to now, we have only exercised the total equilibrium with pure condensed species option for investigating the effects of negative ions (see Ref. (4)). In this reporting period, we considered the effects of ideal condensed solutions on the formation of the negative ions. Since, AlO_2^- is one of the prominent negative ions in the plasma mixture, we considered a solution composed of $Al_2O_3(\ell)$, $SiO_2(\ell)$, and $MgSiO_3(\ell)$. The results of this calculation are shown in Fig. 3.1 As expected, the possibility of mixture formation favors condensation, one of the consequences being the elimination of SiC(s) (which was not limited kinetically). Another consequence is a reduction by 50% of the AlO_2^- ion concentration.

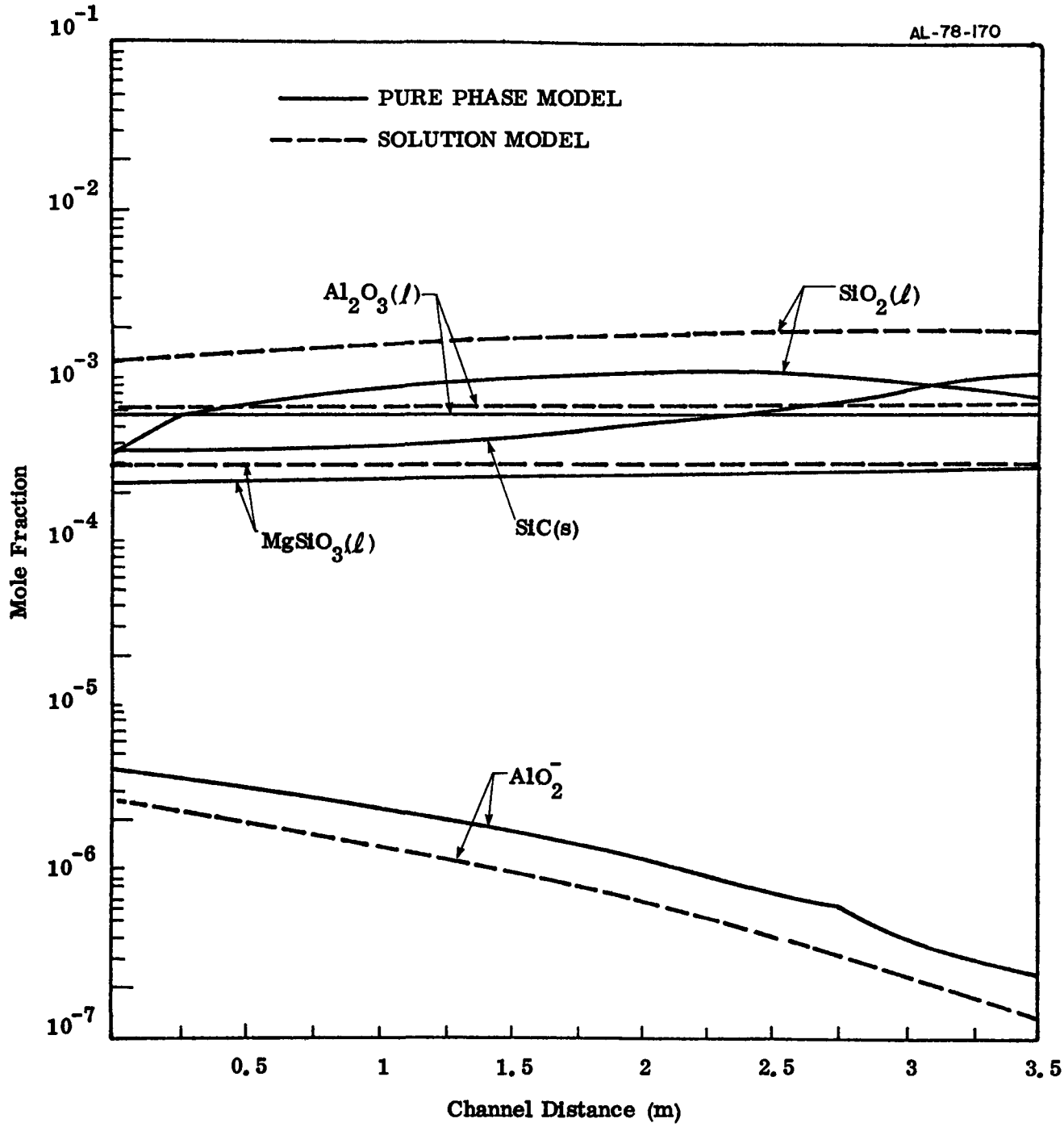

Figure 3.1 Comparison of Pure Component and Solution Condensed Phase Model Concentrations for Si and Al Gas and Condensed Phase Species.

Figure 3.2 shows the effect on FeO_2^- concentration of the inclusion of a condensed phase, $Fe_3O_4(\ell)$, and the addition of $Fe_3O_4(\ell)$ to the solution composed of $Al_2O_3(\ell)$, $SiO_2(\ell)$, and $MgSiO_3(\ell)$. If we first compare the FeO_2^- concentration calculated with no liquid iron oxide species with that calculated including $Fe_3O_4(\ell)$ as a pure phase, we see that allowing the iron to condense has a noticeable effect as the gas cools, around a factor of two at mid-channel. The thermodynamic model of $Fe_3O_4(\ell)$, as well as one of $Fe_2O_3(\ell)$ which was also included in the calculation but found to be ignored by the pure phase calculation in favor of $Fe_3O_4(\ell)$, was kindly provided by Mr. F.E. Spencer of the Pittsburgh Energy Research Center.

In the pure phase model, there is no $Fe_3O_4(\ell)$ until the 0.5m point in the channel, and its concentration increases as the gas cools. When $Fe_3O_4(\ell)$ is allowed in the solution, it is much more stable at high temperatures. This causes another decrease by over a factor of two in the FeO_2^- concentration. However, FeO_2^- is still predicted to be an important negative ion.

To account for effects of the kinetically controlled condensation on the formation of negative ions and other phenomena, such as, seed/slag interaction in the cold regions of the channel and the diffuser, in our future investigations a diffusion controlled condensation model will be added to our computer code.

3.4 Slag/Electron Interaction Modeling

A technical paper presenting our modeling of slag vaporization and condensation nucleation in full scale generators, and the results of that condensation on plasma conductivity has been accepted for publication in the January/February 1978 issue of the Journal of Energy. The Title and Abstract of this paper are presented below.

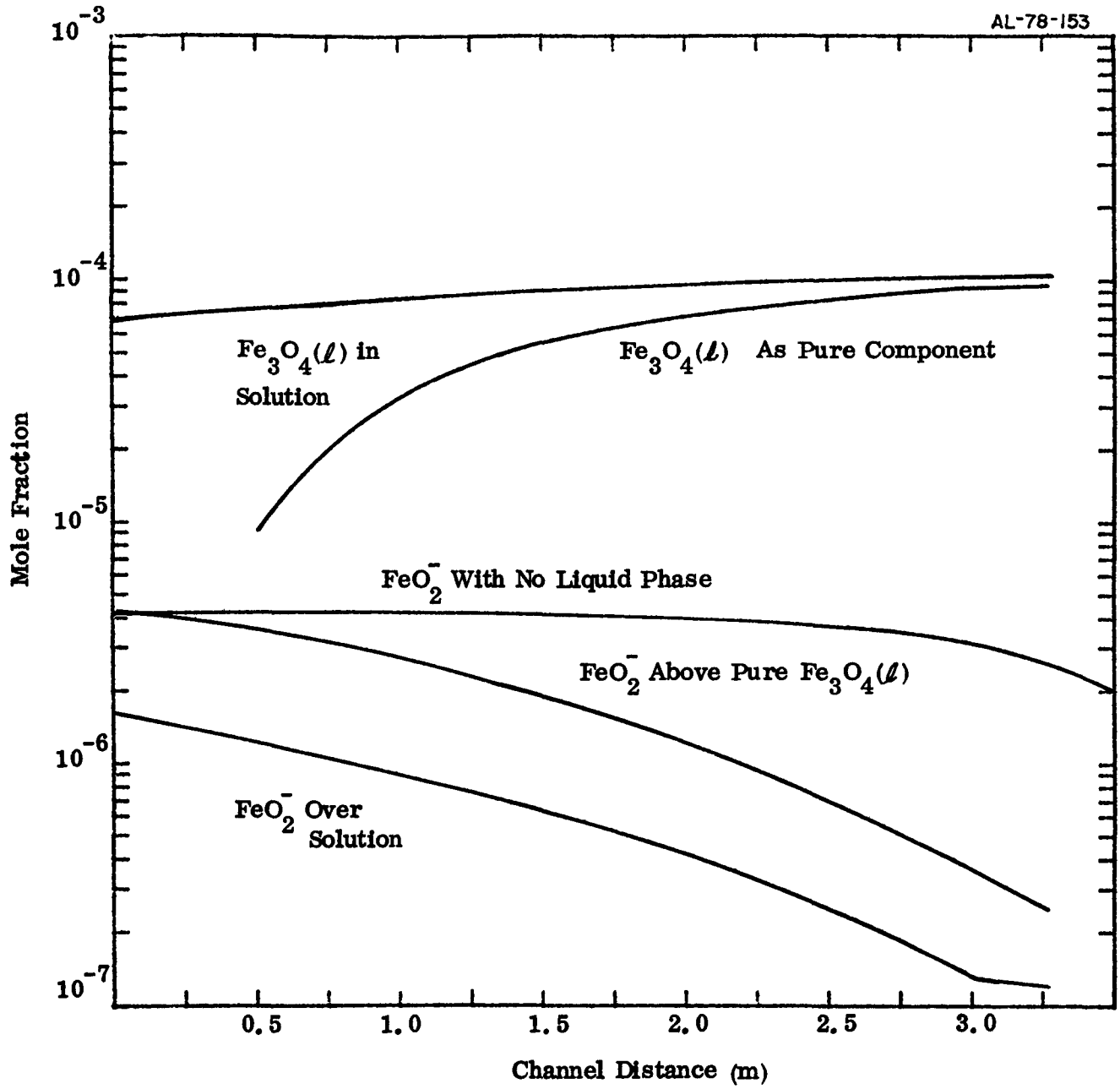

Figure 3.2 Comparison of FeO_2^- Concentrations for No Liquid Iron Oxide Phases, $Fe_3O_4(\ell)$ As a Pure Component, and $Fe_3O_4(\ell)$ in Solution With $Al_2O_3(\ell)$, $SiO_2(\ell)$, and $MgSiO_3(\ell)$.

Potential Effects of Coal Slag Condensation
on Plasma Conductivity in MHD Generators

M. Martinez, C. E. Kolb, and J. L. Kerrebrock
Aerodyne Research, Inc., Bedford, Mass.

An analysis is presented of the possible effects of homogeneous nucleation of slag vapor on the electron density in coal combustion MHD generators. The range of operating conditions for which nucleation may occur is found to include those of interest for baseload applications, provided silica vaporization is not strongly inhibited in the burner. Calculations based on a steady-state ionization-recombination model including microscopic droplets show substantial electron density reductions, especially for drops with a high work function. Key uncertainties that may affect the accuracy of the results are pointed out.

3.5 Seed/Slag Interaction Studies

The possibility that some of the alkali seed in coal-fired MHD generators would be absorbed by suspended molten slag, or by the slag layer on the channel walls, was recognized early, and many studies have dealt with the potential penalties involved. An upper limit for the loss of potassium salt which is economically tolerable has been established at roughly 5% per pass. Calculations based on thermodynamic equilibrium models[7, 8] have tended to indicate losses several times higher than this limit, but comparisons with the available experimental data have shown smaller losses.[9, 10] Thus, as summarized in Ref. (8), either the existing equilibrium models are inaccurate, or kinetic limitations have existed in the experiments so far, preventing equilibrium. One kinetic barrier which may exist is the rate of condensation of alkali on the slag droplets or on the walls; this rate must depend on residence time of the seed/slag-laden gas, and also on whatever factors influence the available slag surface area (drop growth, nucleation, agglomeration). We have initiated studies aimed at clarifying the interrelationships among these factors, and their bearing on the seed recovery fraction. The following is an account of these studies.

Survey Of Seed/Slag Data - Equilibrium Predictions

In Ref. (11), the NBS workers have compiled a selection of data on the composition of slag recovered from the walls of two experimental MHD generators: AVCO's Mark VI and the Stanford Slagging Facility. One significant feature of the data is that in all cases the mole percentage of potassium in the slag (referred to K_2O) is in the range from 15 to 25%. Some of the samples in the Mark VI case were taken from the electrode walls, showing preferential K enrichment of the cathode, while other samples came from the burner slag, where the residence time should be sufficient for equilibration. Based on these data, and on the Si/Al ratio of a large number of natural coal ashes, Ref. (11) indicates that $KAlSiO_4$ (which generates 25% of K_2O per mole when converted to the standard oxide) and $KAlSi_2O_6$ (giving 16.7% K_2O) must be important components of the seed/slag mixture.

Data very similar to these were also reported in Ref. (9), from the UTSI facility. The "chun.." material collected in their cyclone, and originating from the slag layers on the flow train components (100% slag carryover) was found to contain mostly insoluble potassium, typically 16% by weight; this translates roughly to again 16% K_2O by mole in a standard-oxides composition. The dust material originating from the particulate flyash contained both soluble potassium sulfate and insoluble potassium in a concentration somewhat smaller than the wall material (11.5% by mass, after washing).

The combustor experiments at PERC (Ref. 10) gave quite similar results. In all cases, the water-insoluble fraction of the flyash collected in the baghouse filter was found to contain between 13 and 17% potassium by weight (which, again, implies about the same mole percentage of K_2O).

A more direct experiment was reported in Ref.(12)). This was a crucible test, where synthetic coal ash (25% by mass) and K_2SO_4 (75%) were fused together and allowed to equilibrate at 1823°K. There was a clear phase separation into K_2SO_4 crust and an insoluble seed/ash mixture which was found to contain 15% weight percent of potassium.

The evidence from all these experiments, coming from five different sources, and corresponding to quite different conditions, suggests strongly that ordinary coal

slags reach a saturation level of chemically bound potassium, at about 15% - 18% K by weight. We have only been able to locate one reference to an experiment in which a slag with a higher concentration of bound potassium was observed. This is reported in Ref.(13). The experiment was very similar to that of Ref. (12): 25.5% by weight coal ash (with 48% SiO_2, 23% Al_2O_3, 9.3% Fe_2O_3, 6.9% CaO and small amounts of MgO and K_2O) was mixed with 42.3% of K_2SO_4 and 33.2% of K_2CO_3 and fused at 1200°C to 1400°C. There was again phase separation, with a K_2SO_4 crust and an insoluble melt containing 37.% K_2O. The other constituents of this fraction were given as SiO_2 (42.7%), Al_2O_3 (9.2%), Fe_2O_3 (2.5%), CaO (1.9%) and small amounts of MgO, NaO and S. While this experiment seems to indicate the possibility of bound potassium concentrations much higher than the limit shown by other data, there is a confusing aspect of the data as reported: the weight percent of K in the initial mix is the same as that of the insoluble fraction alone (31.5%) while the photograph shown in the paper clearly indicates a thick sulfate crust, possibly amounting to 20 - 25% of the total melt.

Also of importance are the measurements of potassium pressure above synthetic slag/seed melts reported in Refs. (14) and (15). Based on measurements on binary K_2O - SiO_2 and K_2O-Al_2O_3 mixtures Ref. (11), large potassium losses were predicted, especially to the silica. However, similar measurements made on mixtures also containing oxides of Fe, Ca, Mg, as well as both SiO_2 and Al_2O_3 (Ref. (15)) show much less tendency to bind potassium. The result would be predicted seed losses lower by factors of 2 to 3 than if the prediction was based on SiO_2 - K_2O mixtures alone; this would line up well with the observed limit of < 20% seed. The authors of Ref. (15) indicate that their measured potassium Knudsen effusion rates might still be below their equilibrium seed concentration.

The early theories put forward in an attempt to predict seed loss were based on the assumption of ideal solution behavior of molten mixture containing SiO_2, Al_2O_3 and some K constituent (K_2SiO_3 in Ref. (7)). They led to predictions of up to 80% K losses (at 1550°K, 100% slag carryover). Later work (Ref. (8)) postulates a non-ideal solution of SiO_2, Al_2O_3 and K_2O, with activity coefficients represented by means of general quartic polynomials in the concentrations. The Gibbs-Duhem equations are satisfied, and the coefficients are estimated by using data from a variety of sources and fitting them to the assumed functional form. This model still leads to

predictions of up to 50% K loss (at 1550°K, 100% carryover), which the authors (Ref. (8)) find incompatible with the data. For example, even accounting for a separate liquid sulfate phase, application of the model to the experimental conditions of Ref. (10) leads to predicted K concentrations of up to 38% by weight in the insoluble phase (compared to 13 - 17% experimentally). For cases like the one considered in the calculations of the next section (15% ash in coal, 1% K by weight) Table 3-I shows the percentage of K lost for various ash rejection fractions in the burner and for two assumed saturation levels of bound seed in the slag (only "bound" K is assumed lost):

Table 3-I

Slag Carryover %	100%	40%	20%	10%
Maximum Fraction of K Loss (Saturation at 18% By Weight)	15%	6%	3%	1.5%
Same, With Saturation At 54%	45%	18%	9%	4.5%

It seems certain that 20% carryover is a realistic engineering goal, especially using two-stage combustors; whether this is sufficient to ensure an acceptably low seed loss is seen to depend only on the saturation level of seed/slag mixtures. The data discussed in this section strongly hint at something like an 18% limit, and hence at the acceptability of this 20% carryover.

Gas Phase Seed Diffusion

In order to assess the possibility that a kinetic barrier exists in the process of seed capture by the flyash, we postulate here a simple model of the seed condensation process. A population of spherical slag drops of radius R_o (number density n_D) is assumed to exist at the generator exit plane. These drops make up a total mass fraction χ_{ash}, which depends on the type of coal used and the rejection fraction f_r in the combustor. Taking a "standard" coal with 15% ash contents, burning in stoichiometric air,

$$\chi_{ash} \simeq 0.012\,(1 - f_r) \tag{1}$$

(1.2% ash in the gas for 100% carryover). The seed fraction is assumed to be 1% by weight, which gives 1.2% K_2O. In Ref. (16), it is shown that the time for the drops to grow from R_o to $R > R_o$ by diffusion-limited condensation is given by:

$$t = \tau_c \left[f(r) - f(r_o) \right] \tag{2}$$

where r is R/R_∞, R_∞ is the size the drops would attain after complete condensation, $\tau_c = 1/(4\pi D n_D R_\infty)$, D is the vapor diffusion coefficient and the function f is:

$$f(r) = \ln \frac{\sqrt{1 + r + r^2}}{1 - r} - \sqrt{3} \tan^{-1} \frac{1 + 2r}{\sqrt{3}} \tag{3}$$

Figure 1 shows results based on this model; the time, t, needed for the drops to contain a certain volume fraction of seed is plotted, assuming no seed reevaporates and no slag vapor exists. This time scales as the square of the initial radius of the drops, and over most of the range of interest, depends only weakly on the slag carryover. For a limiting concentration of 20% (by volume), we find t (msec) equal to $0.2\ R^2$ (μm), so that, for drops of 10 μm radius, this concentration is reached in 20 msec, while 2 μm drops would saturate in only 0.8 msec. If the limit is extended to 40% by volume, the time is about three times longer.

For comparison, the flow residence time in the diffuser and air preheater (radiant boiler) of a base load MHD generator (Ref. (17)) is roughly 5.5 sec, of which 0.5 correspond to the diffuser. For a radiant type of heat exchanger, this residence time scales as the square root of the mass flow rate, so that even for installations

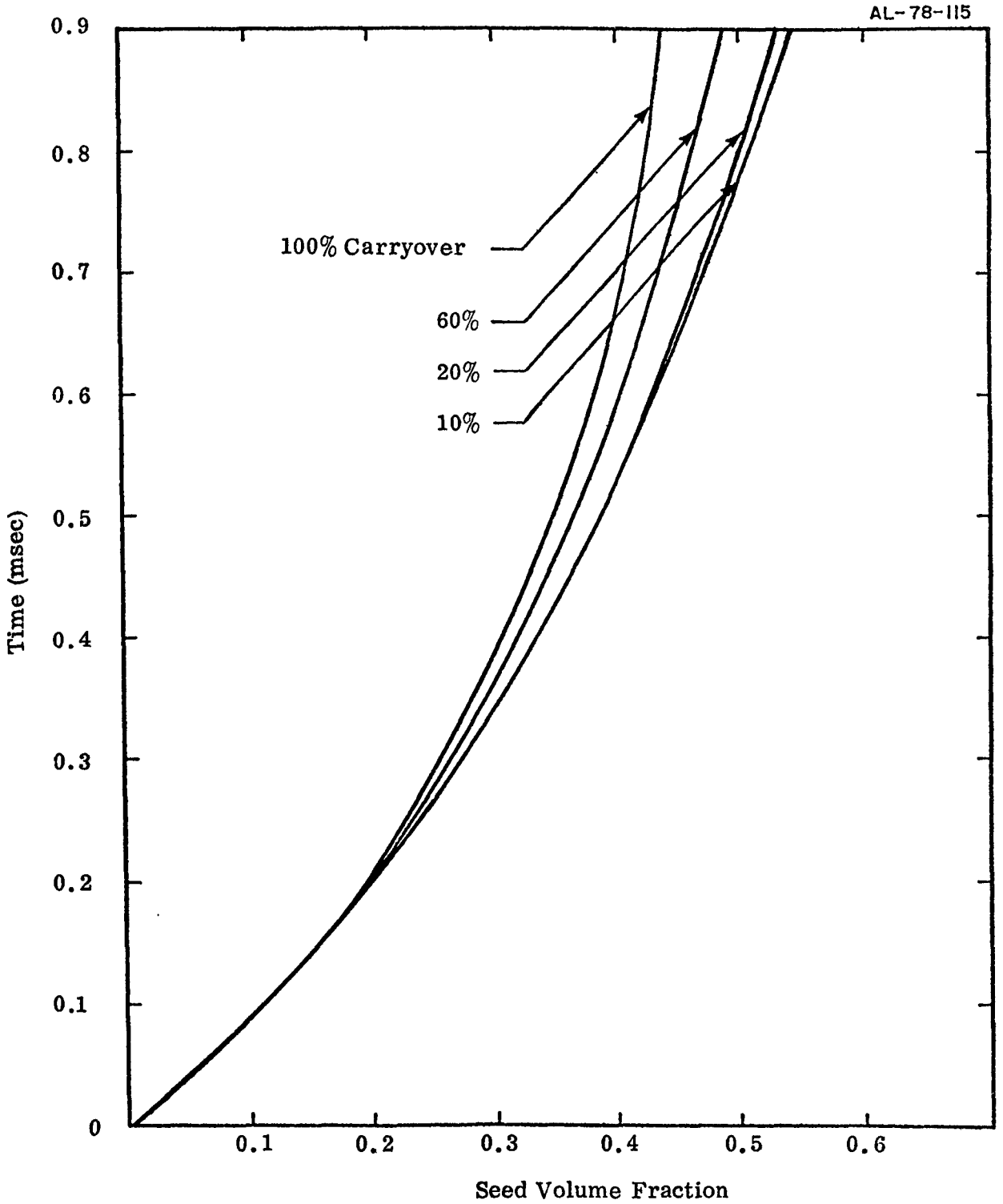

Figure 3.3 Time for Slag Drops to Reach a Certain Seed Concentration. Monodisperse Flyash Assumed.

with an order of magnitude less power output, residence times of the order of 1 sec are indicated. It seems clear, therefore, that gas phase kinetic limitations should not affect the eventual seed loss in commercial MHD generators. This refers, of course, to the losses to the flyash; the loss to the walls would have to be prevented as well as contact of the molten slag/seed particles with the heat exchanger surface. Blown boundary layers, produced by air injection (Ref. 9) is one possible technique. In heat exchangers of a slagging type, the slag on the surface will reach a bound seed concentration similar to that of the flyash particles, so that the precise distribution between suspended slag particles and wall slag should not affect the potassium loss.

In the experiments done at UTSI (Ref. (9) and (18)), a duct after the constant area diffuser simulates the radiant boiler. However, the gas velocity is maintained rather high in both ducts, so that the actual cooling is dominated by convection instead. The total residence time in the duct is only about 7 msec (Ref. (9)), and, according to the size distribution presented in Ref. (18), the flyash is polydisperse, with an RMS radius which can be estimated between 6 and 7 μm. For small degrees of vapor depletion, the drop growth analysis of this section can be applied to polydisperse distributions by using the root-mean-square radius in Eq. (3); we can then calculate τ (msec)/ $[R(\mu m)]^2$ to be between 0.195 ($R = 6\,\mu m$) and 0.143 ($R = 9\,\mu m$), and reference to Fig. 3.3 shows that the maximum seed volume fraction in the drops is between 0.15 and 0.19. The corresponding mass fraction would be somewhat less than this.

This is an upper bound to the possible concentration for at least two reasons: (a) Reevaporation has been ignored, and (b) Diffusion in the condensed phase would further slow down the absorption process (Ref. (8)) estimates liquid diffusion times comparable to the flow time). The measured concentration of insoluble seed in the flyash ranges from 5 to 11% K by weight. The conclusion is that the UTSI experimental residence time is too short for the limiting concentration of seed to be reached in the flyash particles. This was substantiated in Ref. (9) by observations of sensitivity of seed loss and of sulfur emissions to variations of residence time.

This kinetic limitation in the UTSI experiments is unfortunate, because it probably masks the more basic ultimate limit to the seed loss, due to saturation of the slag. As discussed in the previous section, this is suggested by the fact that the chunk materials collected in the same and other experiments do not exceed 16% K by weight.

3.6 Future Modeling Work

Continued improvement of the PACKAGE computer model and its extension to the slag/electron and seed/slag interaction problems is a key feature of the next phase of contract activity. Particular attention will be paid to radiative heat losses from the plasma and to the kinetics of slag condensation.

3.7 References

(1) C. E. Kolb, et al., "Characterization of Open Cycle, Coal-Fired MHD Generators," First Quarterly Report, Report No. ARI-RP-25, Aerodyne Research, Inc. (October 1976).

(2) C. E. Kolb, et al., "Characterization of Open Cycle, Coal-Fired MHD Generators," Secondly Quarterly Report, Report No. ARI-RP-31, Aerodyne Research, Inc. (January 1977).

(3) C. E. Kolb, et al., "Characterization of Open Cycle, Coal-Fired MHD Generators," Third Quarterly Report, Report No. ARI-RP-32, Aerodyne Research, Inc. (April 1977).

(4) C. E. Kolb, et al., "Characterization of Open Cycle, Coal-Fired MHD Generators," Fourth Quarterly Report, Report No. ARI-RP-33, Aerodyne Research, Inc. (July 1977).

(5) C. E. Kolb, et al., "Characterization of Open Cycle, Coal-Fired MHD Generators," Fifth Quarterly Report, Report No. ARI-RP-36, Aerodyne Research, Inc. (October 1977).

(6) S. Gordon and B. J. McBride, "Computer Program for Calculations of Complex Chemical Equilibrium Compositions, Rocket Performance, Incident and Reflected Shocks, and Chapman - Jouguet Detonations," NASA SP-273 (1971).

(7) F. E. Spencer, Jr. and A. A. Deming, "An Algorithm for Calculating Multiphase Chemical Equilibrium," U. S. Bureau of Mines, Report of Investigations 7786, p. 42 (1973).

(8) F. E. Spencer, Jr., J. C. Hendrie, Jr., and D. Bienstock, "A Ternary Margules-Type Model for Plasma/Slag Equilibrium in Potassium-Seeded Coal Combustion for MHD Power Generation: Calculations and Comparison with Experiments," Proceedings of the Sixth International Conference on MHD Electrical Power Generation, Washington, D. C., Vol. II, p. 181 (1975).

(9) K. E. Tempelmeyer, L. Shen, L. Becker, M. Beaton, and J. Martin, "Investigation of Factors Influencing Potassium Seed Recovery in a Direct Coal-Fired Generator System," Proceedings of the Sixteenth Symposium on Engineering Aspects of MHD, Philadelphia, Penn. (May 1977).

(10) D. Bienstock, et al., "Air Pollution Aspects of MHD Power Generation," Paper VII, 1, Proceedings of the Thirteenth Symposium on Engineering Aspects of MHD, Stanford, CA (1973).

(11) H. P. R. Frederikse, T. Negas, and S. J. Schneider, "Development, Testing, and Evaluation of MHD Materials," Quarterly Report, ERDA (April - June 1977).

(12) H. P. R. Frederikse and W. R. Hosler, "Electrical Conductivity of MHD Channel Materials," Paper IV-2, Proceedings of the Fourteenth Symposium on Engineering Aspects of MHD, Tullahoma, Tenn. (1974).

(13) M. Bogdanska, W. S. Brozozowski, et al., "Effects of Slag on MHD Generator Performance," Vol. II, p. 9, Proceedings of the Sixth International Conference on MHD Electrical Power Generation, Washington, D. C. (1975).

(14) E. R. Plante, C. D. Olson, and T. Negas, "Interaction of K_2O with Slag in Open Cycle, Coal-Fired MHD," Vol. II, p. 211, Proceedings of the Sixth International Conference on MHD Electrical Power Generation, Washington, D. C. (1975).

(15) L. P. Cook, E. R. Plante, T. Negas, R. S. Roth, and C. D. Olson, "Crystallization and Vaporization Studies on Synthetic Coal Slag Compositions," Paper II-4, Proceedings of the Fifteenth Symposium on Engineering Aspects of MHD, Philadelphia, Penn. (1976).

(16) M. Martinez-Sanchez, C. E. Kolb, and J. L. Kerrebrock, "Potential Effects of Coal Slag Condensation on Plasma Conductivity in MHD Generators," Post-Deadline Paper Presented at the Sixteenth Symposium on Engineering Aspects of MHD, Pittsburgh, Penn. (1977).

(17) "Energy Conversion Alternatives Study, " Westinghouse Electric Corporation Research Laboratories, Westinghouse Phase I Final Report, NASA CR-134941, Vol VIII, "Open Cycle MHD."

(18) L. Crawford, K. Tempelmeyer, J. Martin, and J. Muehlhauser, "Investigation of Slag Deposits and Seed Absorption in a Direct-Fired MHD Power Generator, " Vol. II, p. 51, Proceedings of the Sixth International Conference on MHD Electrical Power Generation, Washington, D.C. (1975).

4. LABORATORY MEASUREMENTS

4.1 Objectives and Milestones

In this quarter we have achieved the basic goal of the experimental portion of the program, which was the observation of positive and negative ion mass spectra of seeded coal flames. During the quarter several modifications to the apparatus designed to increase its sensitivity were completed. These included electrical isolation and charging of all surfaces which could affect the molecular beam, rewiring of the ion optics voltage supplies to accommodate these new charged surfaces, and installation of a molybdenum skimmer cone. Optimization of the ion optics train was carried out using the newly constructed argon discharge ion source. This has resulted in an apparatus which has been able to sample ions produced in the atmospheric pressure burner, mass resolve them, and display the resulting spectrum on an oscilloscope, and to modulate the ion beam using a square wave shift voltage and produce mass spectra using the lock-in amplifier and chart recorder.

We have made several studies of positive flame ions, finding that the burner lining is coated with enough seed that a substantial vapor pressure of alkali metals can be obtained using only a methane and air flame. This is particularly fortunate since we have made similar observations on seeded coal flames, and although we see the potassium and potassium oxide ion peaks increase by an order of magnitude, with respect to other alkali metals, any other observations are made difficult by sampling nozzle clogging. Positive ion peaks we have seen from only methane flames include strong signals from potassium and cesium and weaker ones from sodium and rubidium as well as potassium and cesium oxide species. A large number of negative ion peaks have been seen in such flames. The largest has been identified as PO_3^- by several tests. Other ions observed include: OH^-, SH^-, BO_2^-, SO_2^-, and PO_2^-, and oxides of chromium, molybdenum, and tungsten. These observations confirm the conclusions reached in the negative ion modeling task.

4.2 Work Accomplished and Discussion

4.2.1 Apparatus Description

Operation of the burner and mass spectrometer system in the sampling and observation of ions has produced a number of changes in various components. Therefore, in this report we give a description of the complete apparatus as it now exists.

We will begin with the overall view of the apparatus given in Figure 4.1. Using this, we will give a brief description of the various parts and their relationships, before going on to discuss individual pieces of equipment in more detail.

The coal burner is divided into burner, channel, and exhaust sections made out of aluminum pipe lined with refractory insulation. The outside of the aluminum pipe is water-cooled by wrapping with copper tubing which is cemented to the pipe with heat-conducting epoxy. The burner is supported by a metal framework, which in turn rests on an aluminum plate which forms the top of a table made out of I-beams. This table supports the gas handling panel, which is not seen in the view of Figure 4.1 but is shown in detail in Figure 4.2. It also supports a framework to which is attached the protective shielding panels, also not shown in the figure. In the rear of the apparatus this shielding is 3/16 inch thick steel plate, while in those areas where visibility is important, it is composed of Lexan sheets backed by heavy perforated metal screens. The framework also supports an exhaust hood, which is vented to the outside through a blower on the roof.

Powdered coal and seed mixtures are fed into the burner using a Plasmadyne Model 1000A Roto-Feed Hopper. In this device, a rotating perforated disc at the bottom of the hopper causes some of the powder to drop through a small hole and become entrained in a stream of air. To ensure positive feeding, a small tamping hammer can be used which operates automatically as the disc rotates. Although this introduces a periodic pulse into the feed rate, it is found that when the hammer is removed the feed has even more serious, random pulses. With the hammer, feed

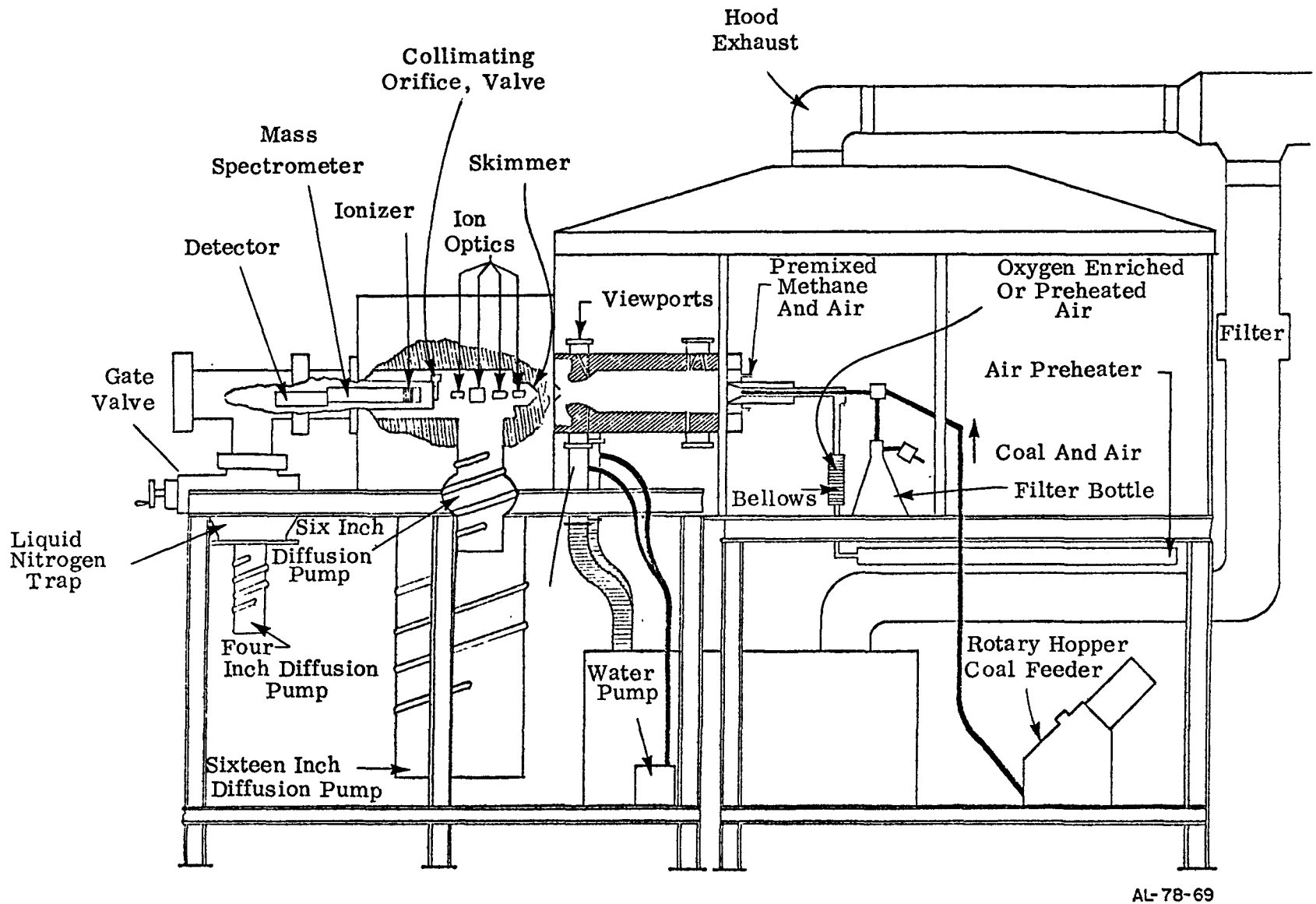

Figure 4.1. General View Of Burner and Mass Spectrometer

rates can be calibrated to around ten percent. Using the rotofeeder coal feed rates from 1 to 15 g/min have been obtained. The coal and all other powders fed must be sieved through a 100 mesh screen to prevent clogging of the feeder.

On its way to the burner, the coal and air stream passes through a solenoid-operated four-way valve, whose controlling switch is located near the mass spectrometer detection electronics. The third arm of the valve leads to a filter bottle, while the fourth is either capped or attached to a methane feed line. This feature allows a steady flow of coal to be set up, collecting in the filter bottle, which can be quickly switched into the burner. This maximizes the running time before coating of the sampling nozzle with seed and slag components, in particular potassium salts, causes plugging of the sampling orifice. In the case where methane is fed into the burner through the valve when the coal is being exhausted, a second solenoid valve in the methane line is shut by the same switch so that methane does not flow into the filter bottle when coal is being fed into the burner.

The burner is actually two concentric burners, an inner one through which particles of coal and seed can be fed, and an outer ring which burns only methane and air with the purpose of protecting the inner coal flame from heat loss to the walls. The exhaust gases are pulled through two exhaust ports by the same blower which serves the hood. On their way out, they pass through a waterjacket section of the exhaust manifold whose inner wall is perforated to provide a water spray. This spray cools the gas and carries any particles with it into a collection tank. The water is recirculated through a filter by a pump which feeds the water-spray manifold. The exhaust then passes through the water tank and through a fiber filter on its way to the blower.

The hot atmospheric pressure combustion gases traveling down the center of the channel are sampled into the first vacuum chamber through a small hole in the tip of a stainless steel cone soldered to a water-cooled copper base plate. The center of this expanding gas is sampled through another small hole in the tip of the molybdenum skimmer cone into a second vacuum chamber, forming a molecular beam. Here the ions are focused and steered by a system of ion optics. This beam passes through a hole which can be covered by an electrically-operated gate valve in a third and even

lower pressure chamber which houses the ionizer and quadrupole mass spectrometer. The electron gun ionizer is used only in detecting neutrals and is turned off when studying ions. Directly behind the ionizer are more ion optics to bring the ions from whatever source onto the axis of the quadrupole.

The first and highest pressure vacuum chamber is pumped by a Varian HS Series 16-inch diffusion pump with a nominal pumping speed of 10,000 liters/sec. With the present 0.008 inch sampling hole, a typical pressure in the first chamber is 6×10^{-4} torr. The second vacuum chamber, containing the ion optics, is pumped by a Varian VHS Series 6-inch diffusion pump, with a nominal pumping speed of 2400 liters/sec. Both of the outer chamber pumps use a silicone pump oil, Varian DC 704. The mass spectrometer chamber is pumped by a Varian M Series 4-inch diffusion pump with a nominal pumping speed of 800 liters/sec. The pump is topped by a Granville-Phillips Series 278 Cryo Clean 4-inch liquid nitrogen trap and an Airco Temescal Series 5010 4-inch gate valve. The mass spectrometer pump uses Monsanto Santovac 5 pump oil, a polyphenyl ether, in order to avoid buildup of a dielectric film which can defeat mass spectrometer ion optics. The 16-inch diffusion pump is backed by a Stokes Microvac Model 149-4 mechanical pump with a nominal pumping speed of 38 liters/sec. The two small diffusion pumps are backed by an NRC Type 15-5 mechanical pump with a nominal pumping speed of 14 liters/sec. A typical pressure in the second chamber is 1×10^{-5} torr, and in the third, 2×10^{-7}. The three diffusion pumps have individual temperature interlocks which shut off the pump if it overheats, as well as a waterflow interlock which monitors the cooling water to them and the Stokes mechanical pump. In addition, the mass spectrometer diffusion pump can be interlocked to the filament of the ionization gauge for that chamber, so that the pump is shut down in the event of a large leak.

A cross-sectional view of the coal burner is given in Figure 4.2. In the central coal burner the coal dust and air stream from the feeder (and any added methane) enters through the small central tube while the bulk of the burner air (preheated, or oxygen augmented as the case may be) enters through the larger concentric tube. The swirl vanes in this tube serve to keep the coal suspended inside the burner tube. We have never had any trouble with coal dust building up behind the burner grid or with clogging of the holes in the grid. The concentric outer burner serves to isolate the

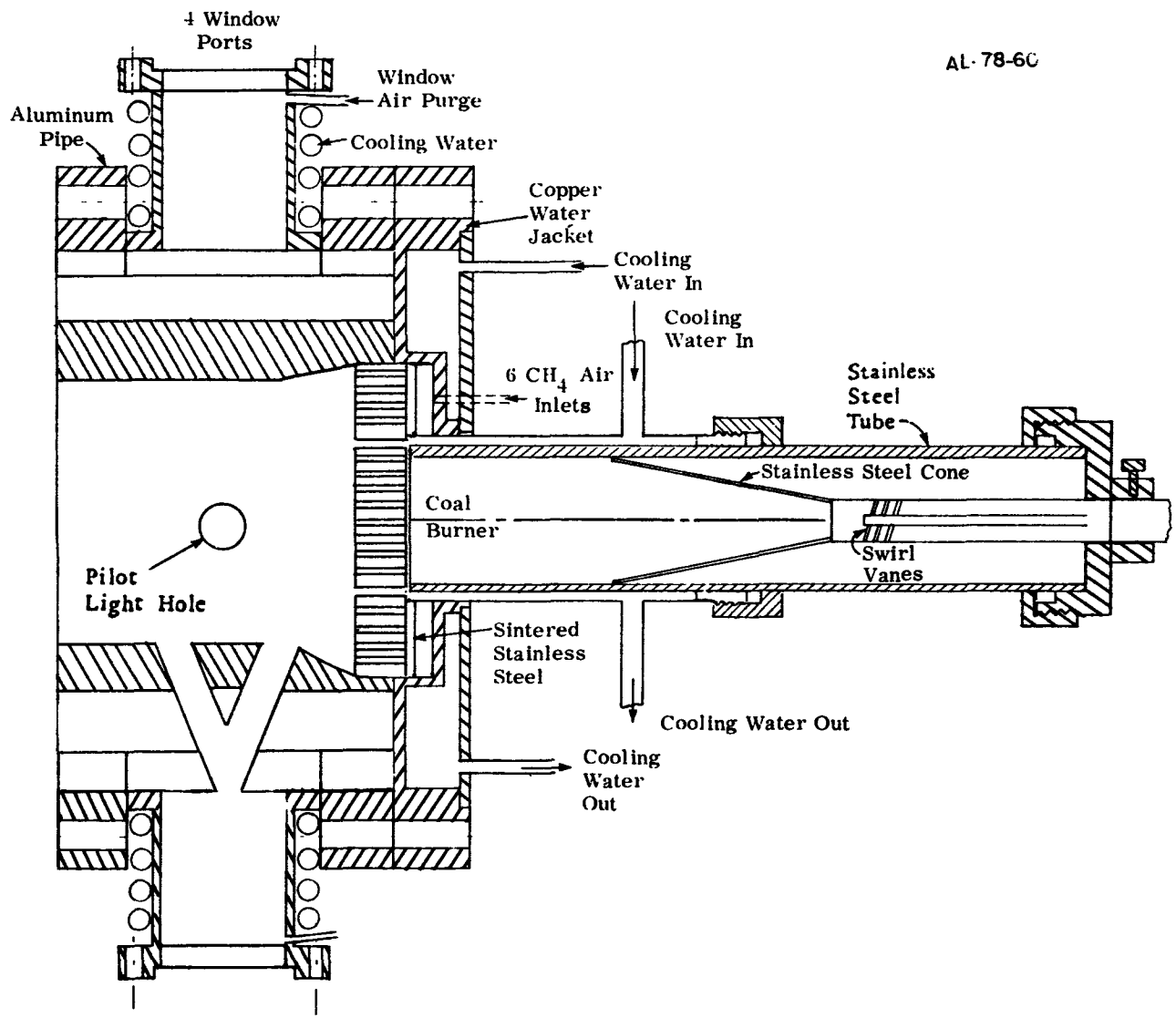

Figure 4.2 Coal Burner and Viewport Section

coal flame from the walls by burning premixed methane and air. Both burner grids are presently constructed of fibrous zirconia board with a number of drilled 1/16 inch holes. The outer guard flame burner also has a ring of porous stainless steel which prevents flashback into the premixed methane and air. The ratio of surface areas, and of hole areas, for the guard and coal burners is close to two to one.

To reduce heat losses, the viewports at the burner end have been covered with insulation except for two small holes which allow viewing of the burner grid and of the channel wall for the purpose of measuring its temperature. One other hole in the wall allows entry of the pilot flame from a propane torch, which is turned off once the methane flame is stable. To avoid explosions, the back and sides of the methane burner chamber as well as the sleeve which holds the coal burner tube are water cooled.

Figure 4.3 shows the gas handling system for the coal burner. Of particular interest are the separate flow meters on the air and oxygen lines to each burner, allowing reliable mixing of oxygen with the air. A typical set of flow rates is given in Table 4-1, which will serve as nominal operating parameters for future

Table 4-1 Burner Gas Flow Rates

Burner Methane	5 liters/min
Guard Flame Methane	5
Burner Air	55
Burner Oxygen	0
Guard Flame Oxygen	0
Guard Flame Air	80
Rear Window Purge Air	8
Front Window Purge Air	5
Coal Feeder Air	8

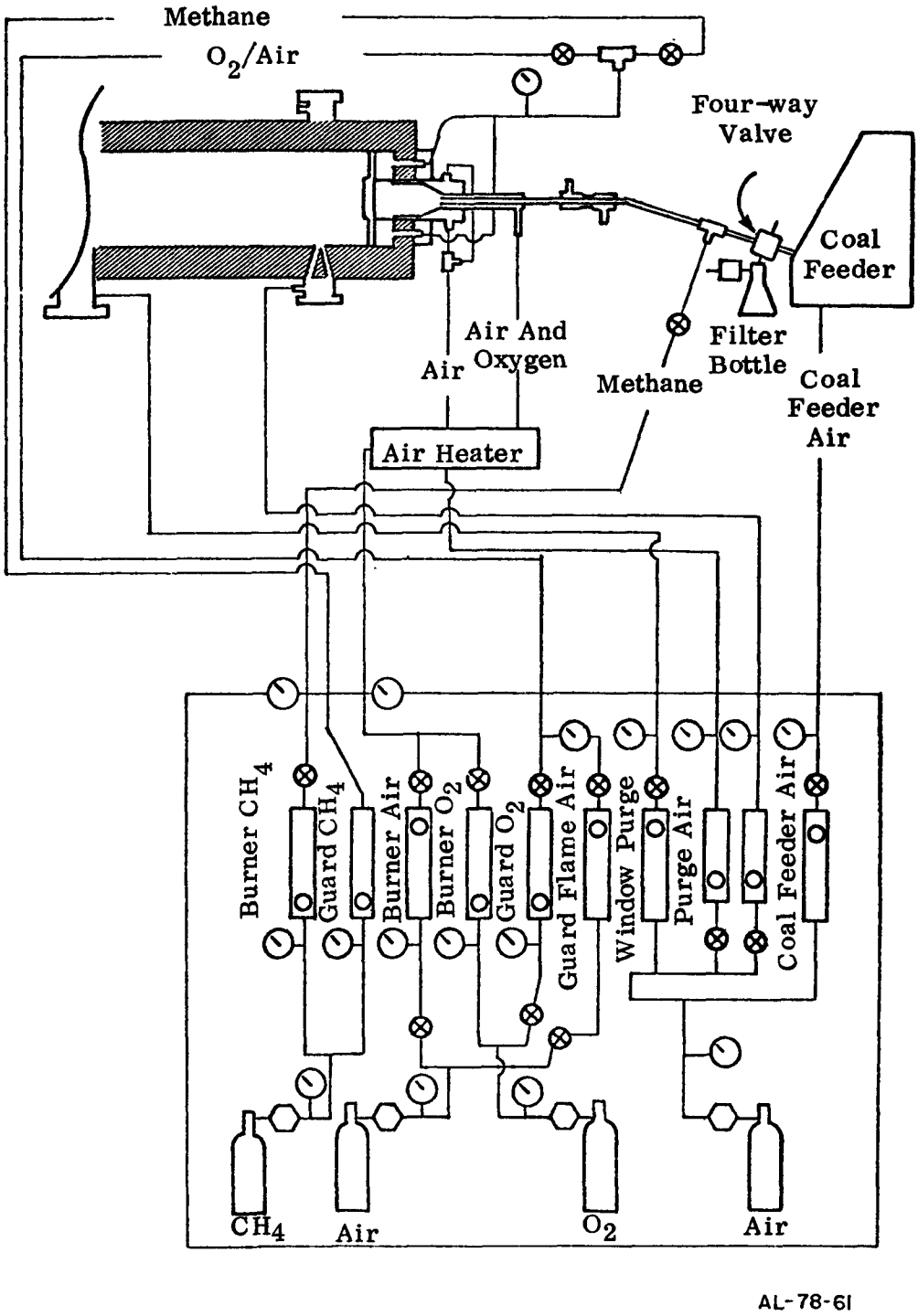

AL-78-61

Figure 4.3. Gas Handling Schematic

discussions. (The feed lines up to the regulating valves are normally run at 40 or 50 pounds pressure, but the flow rates of Table 4-1 are at standard temperature and pressure.)

A problem which was discovered with the original burner design was that poor insulation allowed too much cooling of the gas before it reached the sampling nozzle. When all the radiative power that the flame is able to emit is carried away from the gas, its temperature will drop by one fourth to one third of 2000°K, down to 1200° to 1500°K, the range observed at the burner exit. New walls were installed, with one-tenth the thermal conductivity, so that only a small fraction of the radiated power could be conducted out of the burner. The rest goes into heating the walls, and as the temperature difference between walls and gas decreases, the net radiation loss to the walls goes down. Such insulating walls made from fibrous refractory cylinders together with a reduction in the area of open holes to the outside reduced radiation losses and essentially preserved the gas at combustion temperatures all the way to the burner exit.

The construction of the new burner walls is illustrated in Figure 4.4 The fibrous refractory forms, though reasonably durable, are soft and easy to work with knives, saws and drills. The main channel section is a 4-inch i.d. porous zirconia tube, which gently expands to 4 1/2 inches at the guard flame burner. It is inserted inside a low density alumina-silica tube, which in turn is supported inside the aluminum pipe by spacers cut from alumina-silica board and by wrappings of fibrous alumina blanket. A large alumina cylinder forms an insulating liner for the exhaust port assembly. Three concentric zirconia tubes were joined with zirconia cement and sculpted into a nozzle at the channel exit, which carries the flow directly onto the sampling cone. The nozzle is so constructed that the cold outer walls are not visible from the main part of the channel, and in particular not from parts which are visible from the outside through small (1/4 inch diameter) holes cut through the liner at the viewports. These holes allow viewing of the inner walls with the optical pyrometer. Using the methane guard flame of Table 4-1 to heat the walls, typical pyrometer readings of 1350° to 1400°C are obtained.

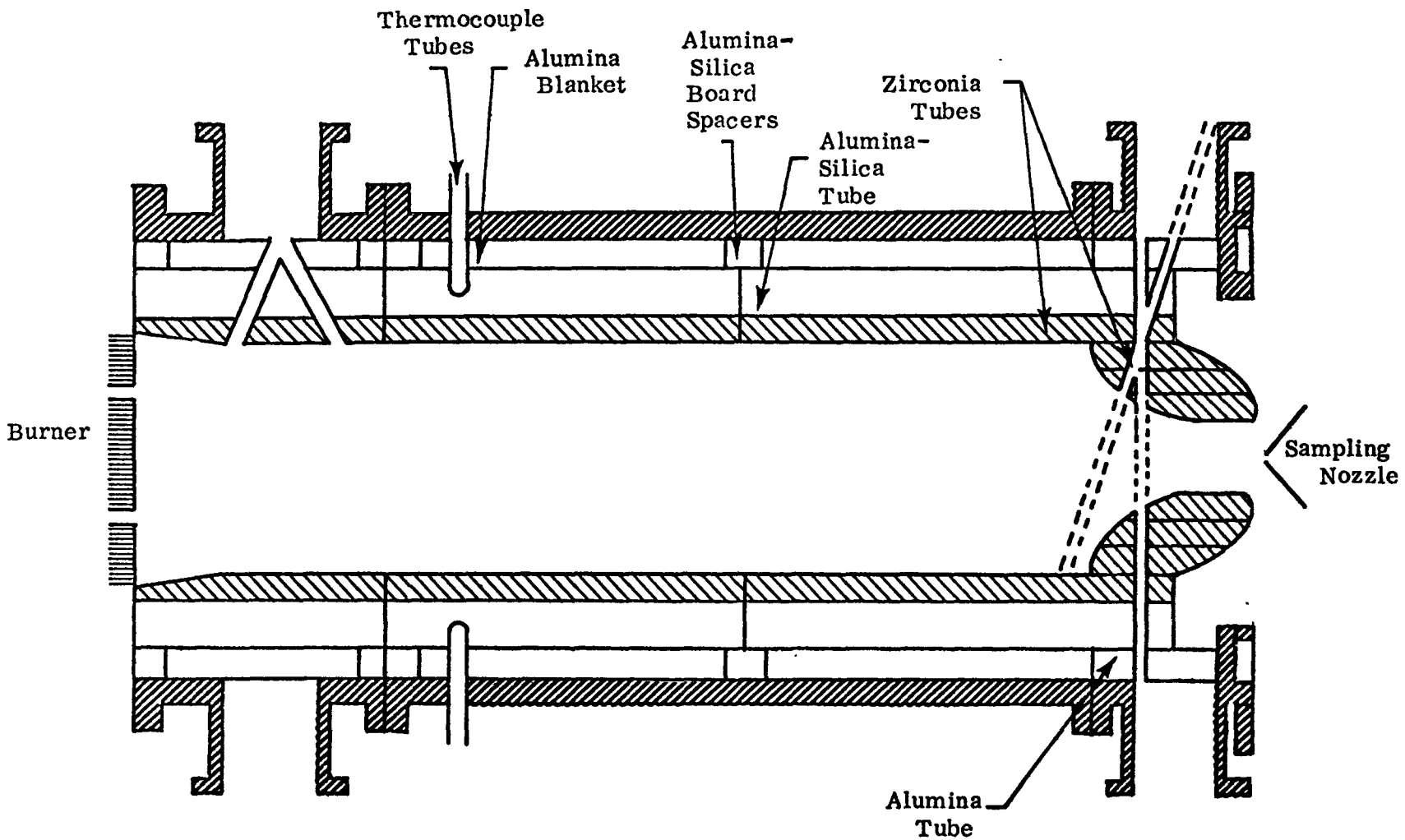

Figure 4.4. Burner and Channel Insulation

Figure 4.5 shows the exhaust and sampling end of the channel. Again, to direct the flow of hot gas towards the sampling cone and prevent the formation of a cloud of stagnant gas in front of the sampling orifice, the channel is formed into a nozzle or constriction with an inner diameter of one inch. This small size also minimizes radiation losses. The flow through this narrowing is still smooth and quiet, and is calculated to cool very little before reaching the sampling cone. A platinum/platinum-rhodium thermocouple is mounted at the end of the constriction extending into the center of the flow. For the basic methane and air flow rates given in Table I the temperature read on the thermocouple does not much exceed 1200°C. This temperature must be corrected for the balance between convective heating of the thermocouple and the losses through radiation and conduction. At this temperature, the losses are essentially radiative, and the correction raises the observed temperature by around 175°C.

When not sampling, the sampling cone is protected from the flame by a water-cooled gate valve, shown in a front view in Figure 4.6. The small volume enclosed by the gate valve and the base plate can be filled with a reference gas such as argon during sensitivity checks.

Figure 4.7a gives actual size representations of the sampling cone in cross section and front view. The present cone is of stainless steel, machined in our own shop, with the hole in the tip simply drilled. The 0.008 inch hole diameter is a reduction over the previous value of 0.010 inches to allow the large diffusion pump to operate in a more comfortable pressure range. The cone is now soldered to the water-cooled copper baseplate. It was originally secured with three small screws and a rubber O-ring, but as the burner performance improved, the heat load increased and this method was no longer practical. We have had some problem with thermal shock causing the solder to crack, but the present silver solder seems to hold well enough.

Figure 4.7b gives an actual size cross section of the skimmer cone which forms a molecular beam out of the gas expanding through the sampling orifice. The entire piece was originally made out of stainless steel. However, we recently learned that use of this material, and many others, can degrade the transmission of ions through small holes [1,2]. This appears to be a surface chemistry effect which is not well understood.

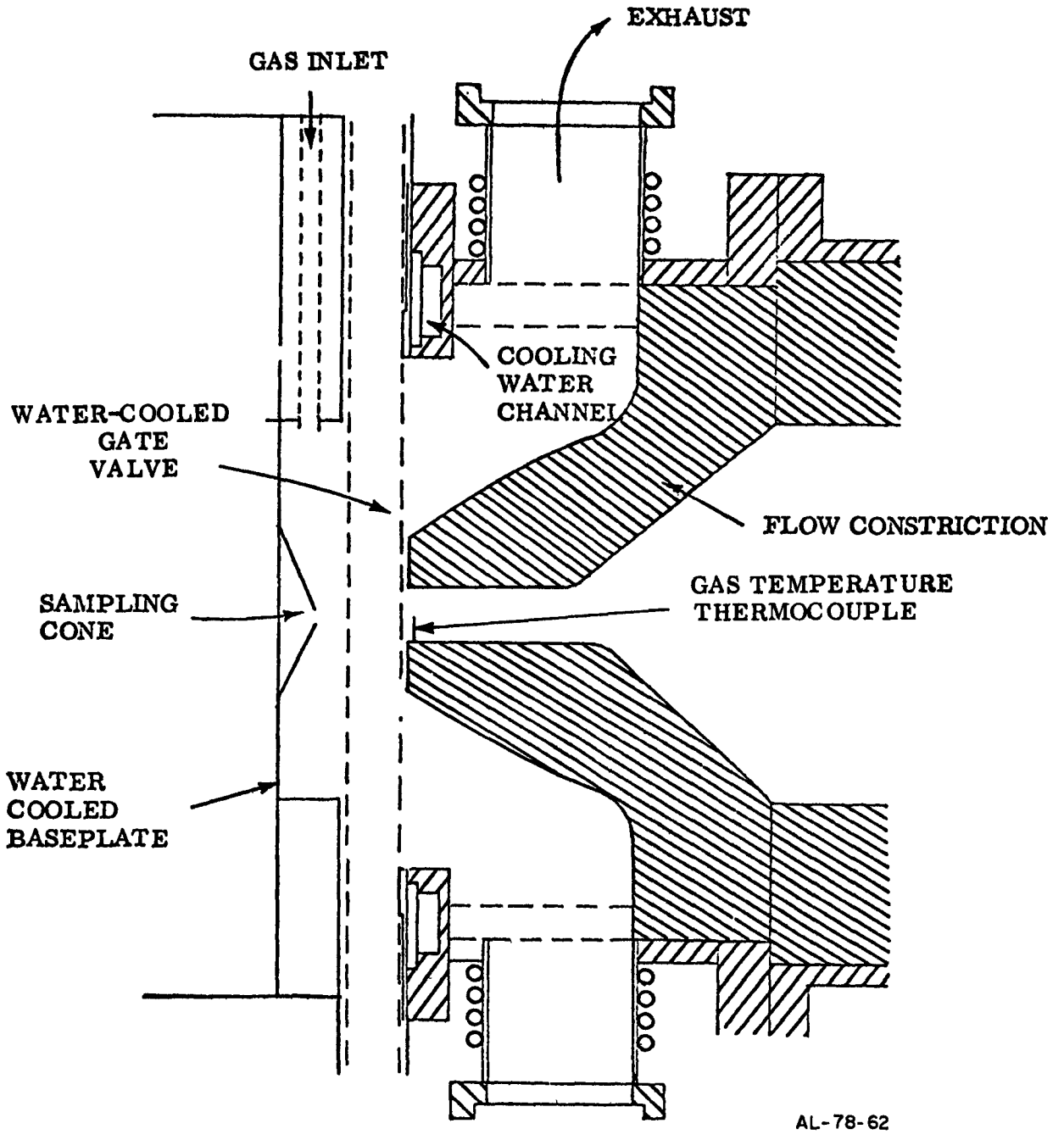

Figure 4.5 Channel Exhaust Section

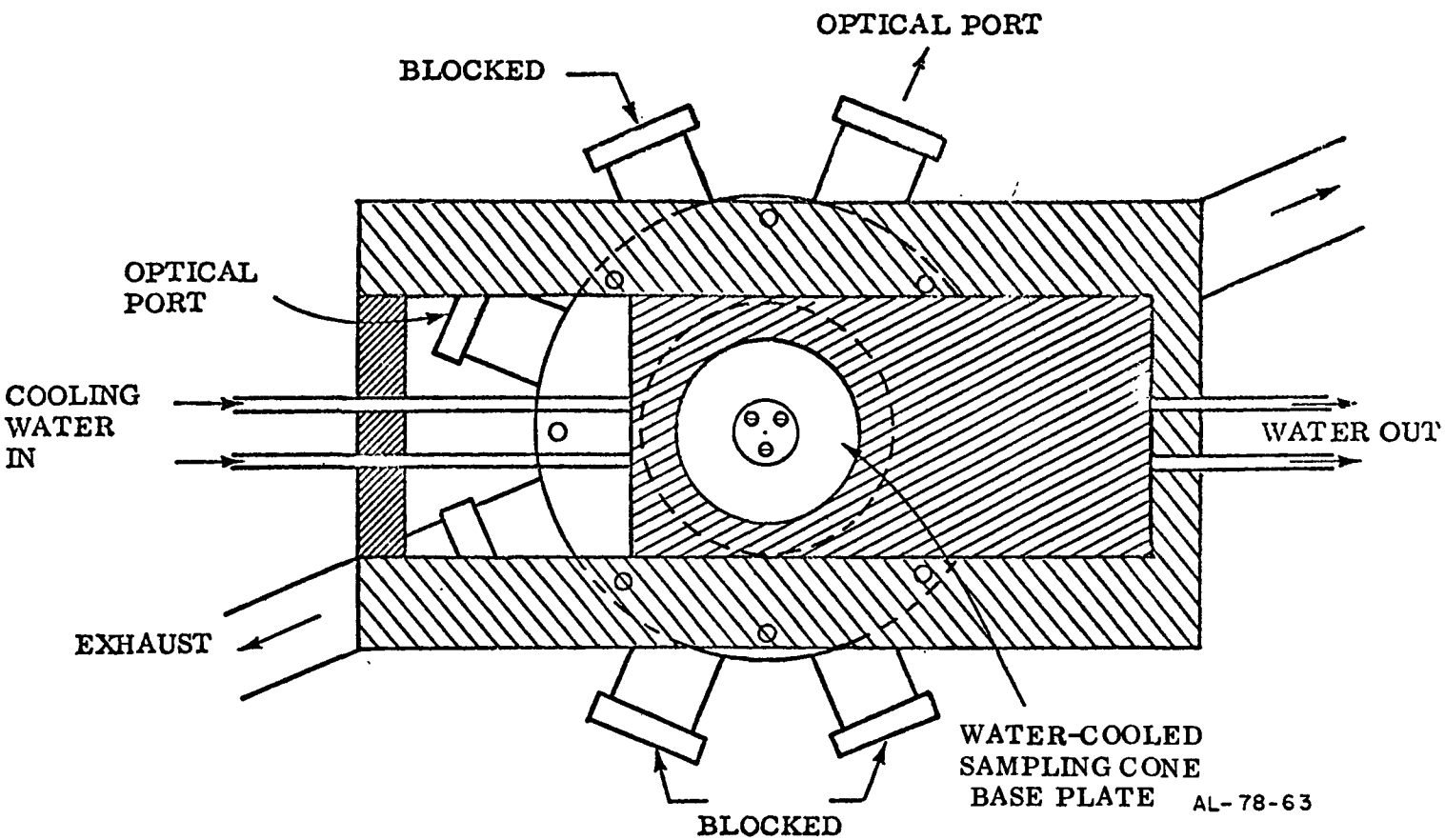

Figure 4.6 Gate Valve and Exhaust Port

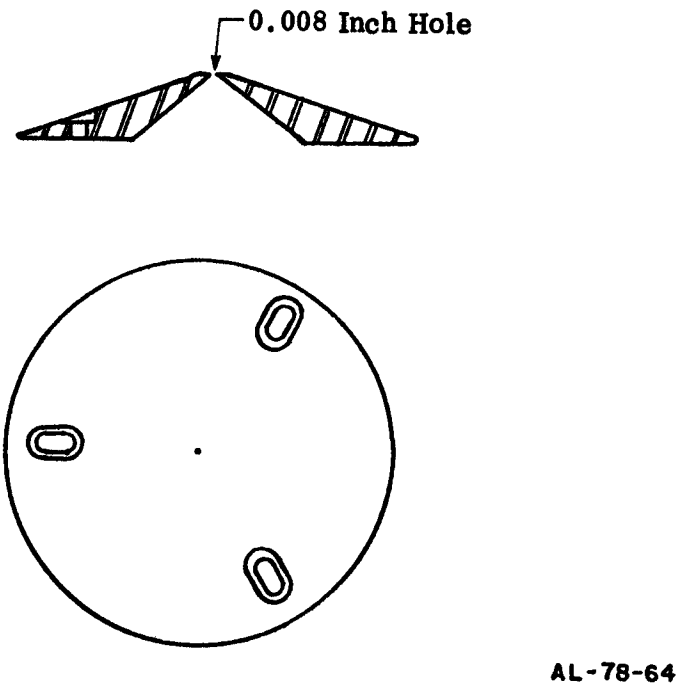

Figure 4.7a Sampling Cone

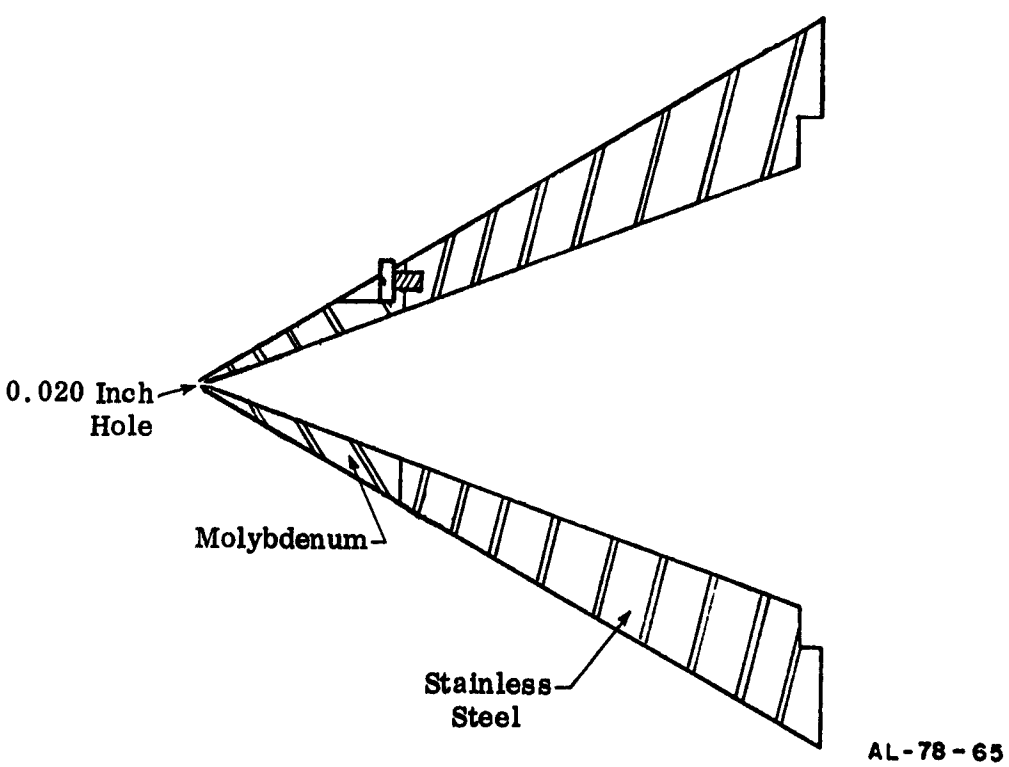

Figure 4.7b Skimmer Cone

One of the few materials which has been found to avoid this problem is molybdenum,[2, 3] so a portion of the cone closest to the beam was cut off and replaced by an identical piece of molybdenum. Since the skimmer operates in a relatively high vacuum, simply screwing the molybdenum and steel pieces together provided a sufficient seal.

Figure 4.8 is a schematic of the ion optics system used to carry the ion beam from the skimmer to the ion lenses at the front of the mass spectrometer. All pieces are made from thin sheets of stainless steel supported by insulating plastic. The first two 1.5 inch diameter cylinders form a simple two tube lens. This is followed by four shift plates in the form of a box. The intention of this design is that the cylinder lenses focus the beam near the entrance to the mass spectrometer chamber, and the shift plates move it around until it passes through the hole. A discussion of the voltages actually needed to attain this behavior will be given in the section on operation of the equipment, and typical voltages are also given in Figures 4.9 and 4.11. After the shift plates and extending almost up to the gate valve covering the entrance to the mass spectrometer is a two inch diameter cylinder marked Lens 3. The end nearest the gate valve is capped with a stainless steel plate with a half-inch hole in the center. This was originally done to make this cylinder a more efficient Faraday cup, a collector of the charged beam which can be used with the picoammeter to measure the beam current arriving at this intermediate point in the system. Now that this beam attenuation measurement has been made (roughly half the attenuation occurs from the skimmer to the third lens, the other half in going into the inner vacuum chamber and through the mass spectrometer) the third lens acts as another collimating and focusing element.

A schematic diagram for the voltage supplies used to charge the ion optics in the preceding as well as other surfaces which affect the beam is given in Figure 4.9. For reasons explained in the section on argon ions, only the skimmer requires a large drawout voltage. The first cylinder lens is also run at a high potential, so that with the second cylinder a decelerating focusing lens is formed. From the second lens to the plate covering the mass spectrometer chamber all surfaces are floated on one voltage supply, usually run at around 30 volts. Batteries and voltage dividers are also

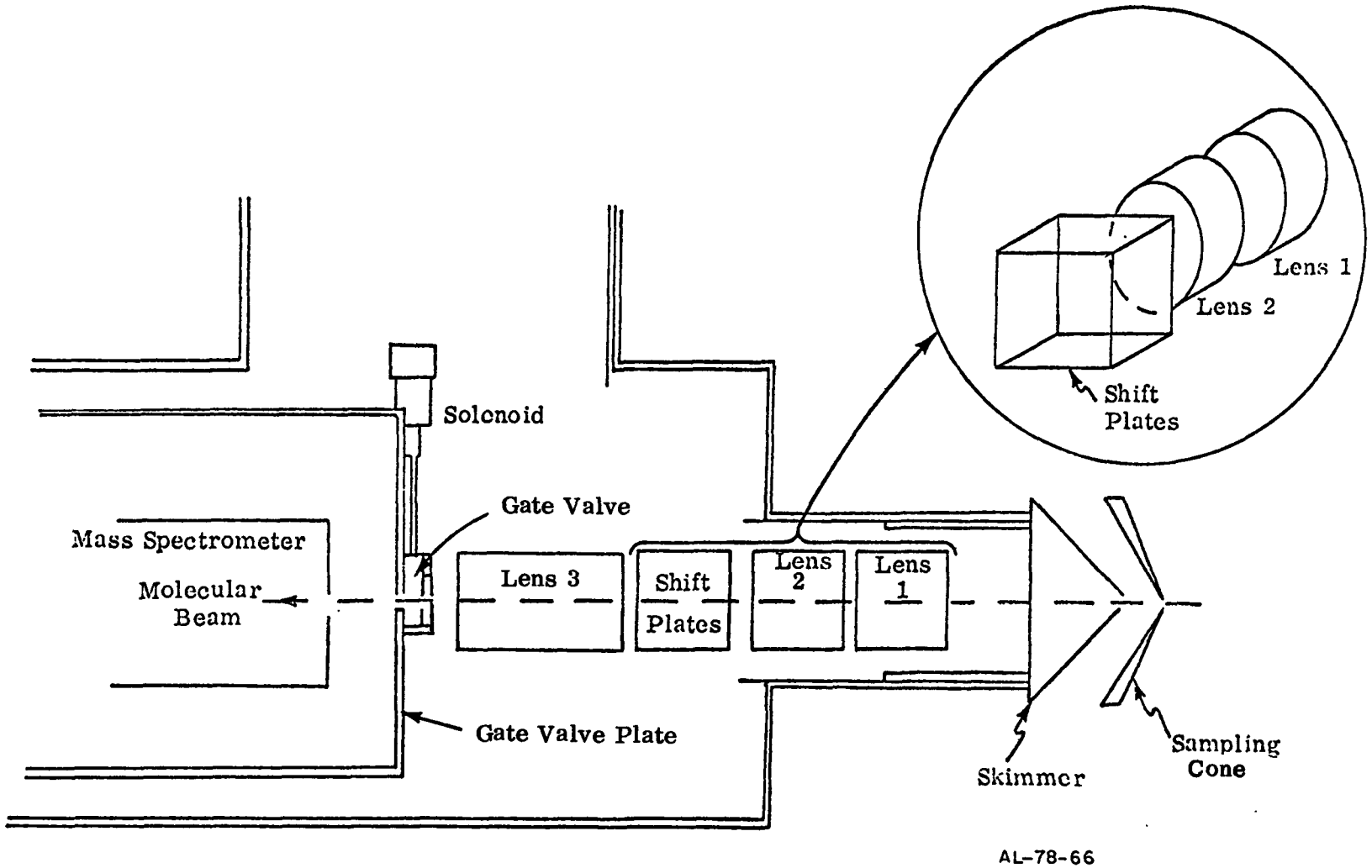

Figure 4.8 Ion Optics

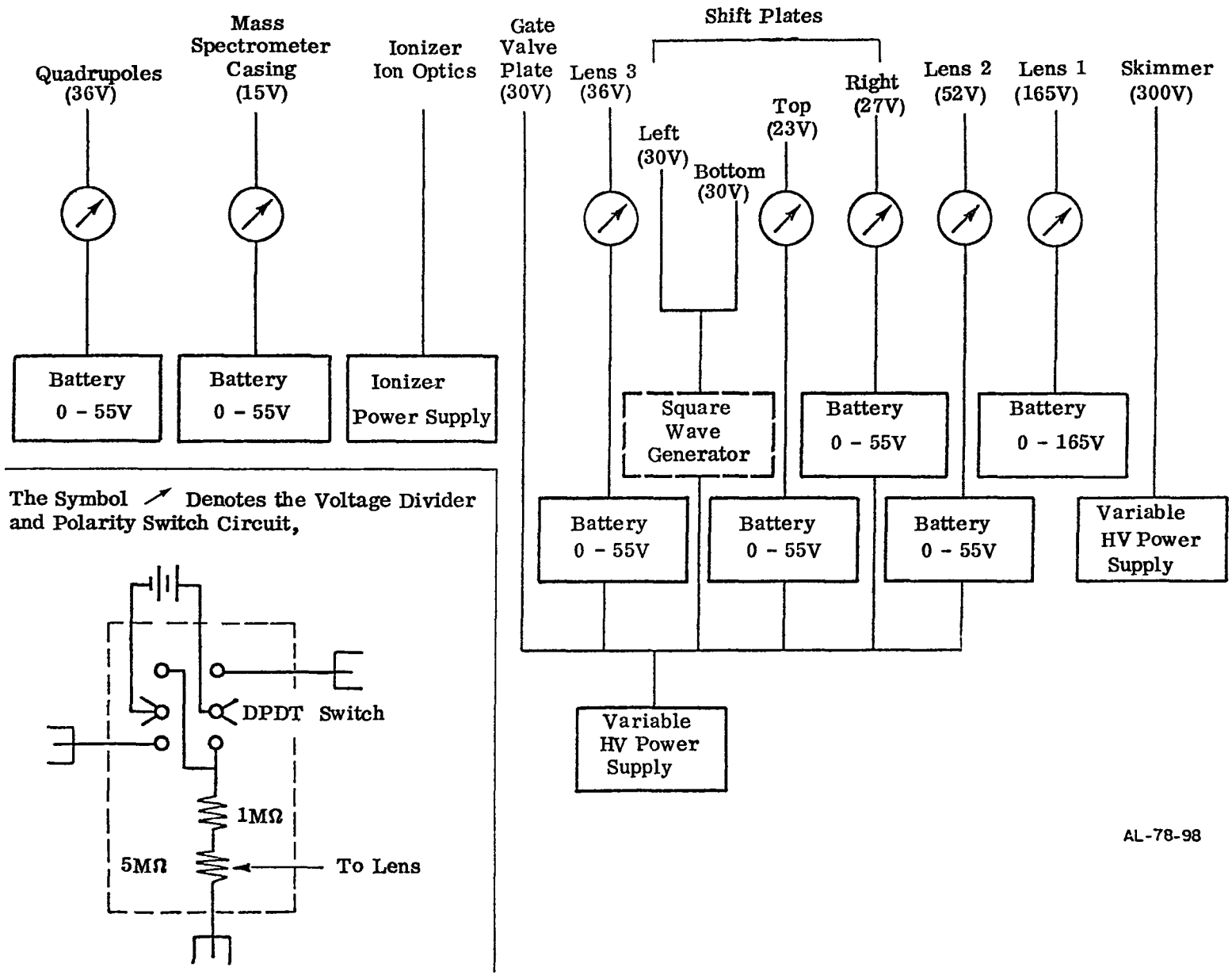

Figure 4.9 Ion Optics Voltage Supply Schematic

floated at this base voltage to allow for individual variations. Chopping of the ion beam can be achieved by floating a square wave generator in the circuit for two of the shift plates. A square wave amplitude of ten volts is quite adequate.

A detailed actual size drawing of the plate covering the mass spectrometer chamber and the gate valve which covers the hole through that plate is given in Figure 4.10. The upper part of the shaft of the gate valve (not shown in the figure) is thickened and lies inside the coil of a solenoid, which moves it up and down against the resistence of a spring stretched between the gate valve and its retaining guide. The rear surface of the gate valve contains an O-ring. However, the valve makes electrical contact with the plate, so that since the entire plate is isolated from the vacuum system ground it can also be used as a Faraday plate type of ion collector. To once again protect the beam from deflection due to charge buildup on dielectric surfaces (such as pump-oil coated walls), the charged plate is extended by a two-inch diameter stainless steel cylinder which reaches almost to the front of the mass spectrometer ionizer.

Figure 4.11 gives an approximately half-scale representation of all the surfaces that can affect the ion beam and typical voltages at which those surfaces are operated. The positive voltages are used for negative ions, while reversing all signs is all that is necessary to collect positive ions. All elements have been discussed up to the mass spectrometer ion optics, a voltage supply diagram of which is given in Figure 4.12.

The mass spectrometer ion optics immediately follow the axial electron beam ionizer, which is used to create positive ions from neutral molecules. These ion optics have a large effect on the sensitivity and resolution of the mass spectrometer. When looking at ion beams, the ionizer is turned off, but the ion lenses can still have a large effect on the ion signal. The ions then travel down the axis of the quadrupole filter where the proper DC and RF voltages applied to the poles serve to select particles with a certain mass to charge ratio. We should note here that the reason that all surfaces, including the mass spectrometer casing and the quadrupole, must be floated at a small attractive potential is that flame ions are created at ground potential, while ions from the electron beam ionizer were formed at a small potential above ground.

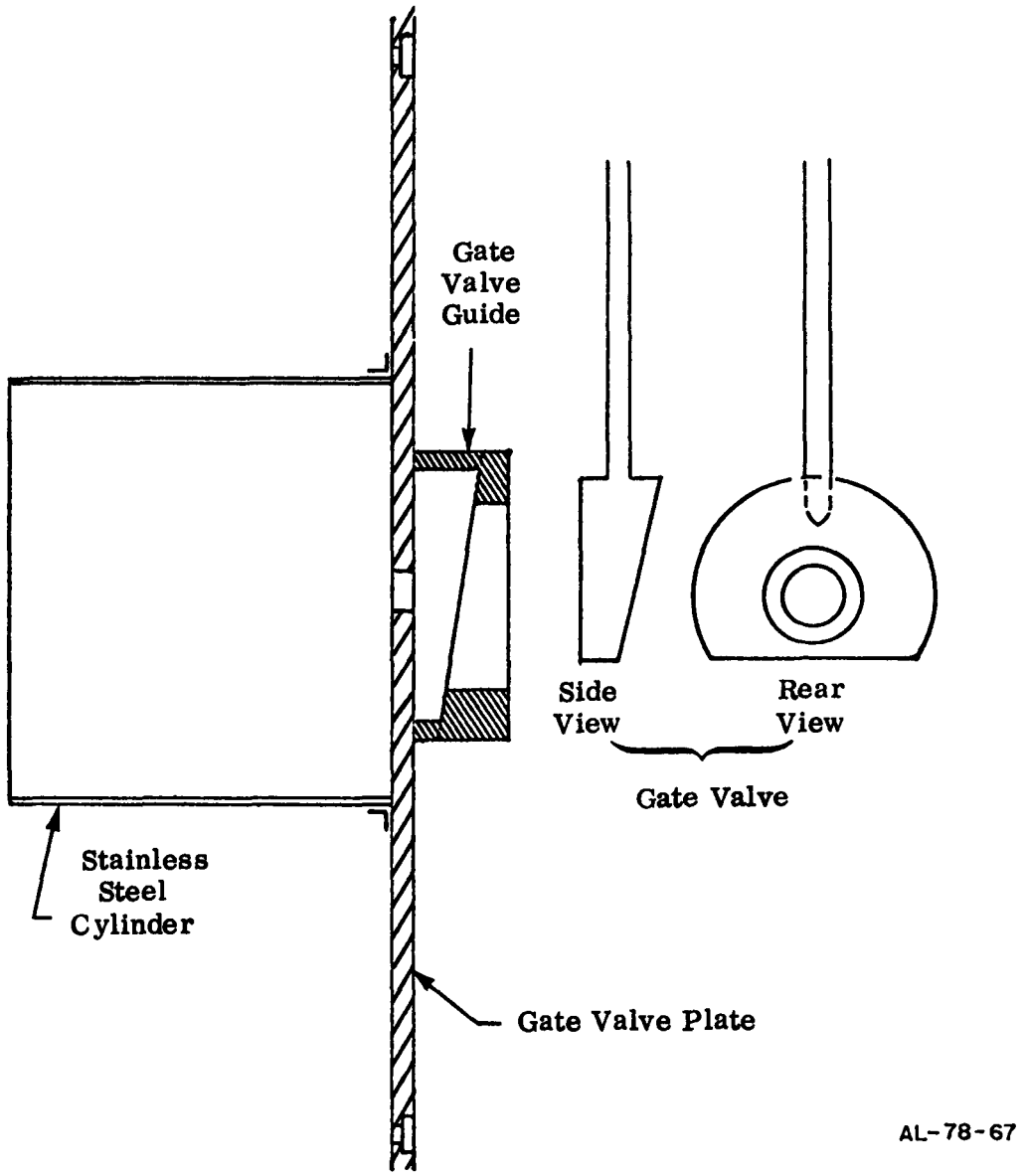

Figure 4.10 Mass Spectrometer Chamber Gate Valve Plate Assembly.

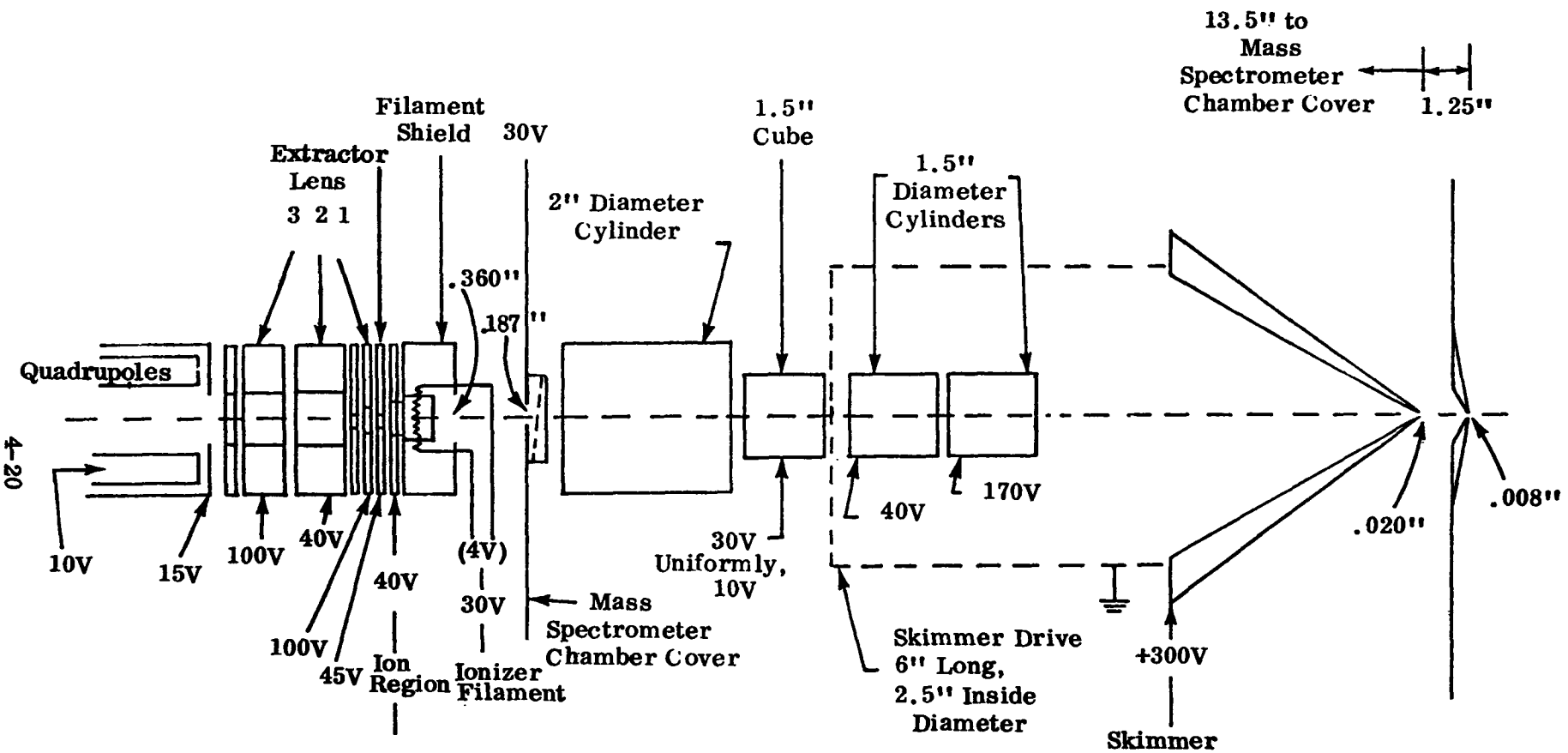

Figure 4.11 Ion Beam Path

AL-78-100

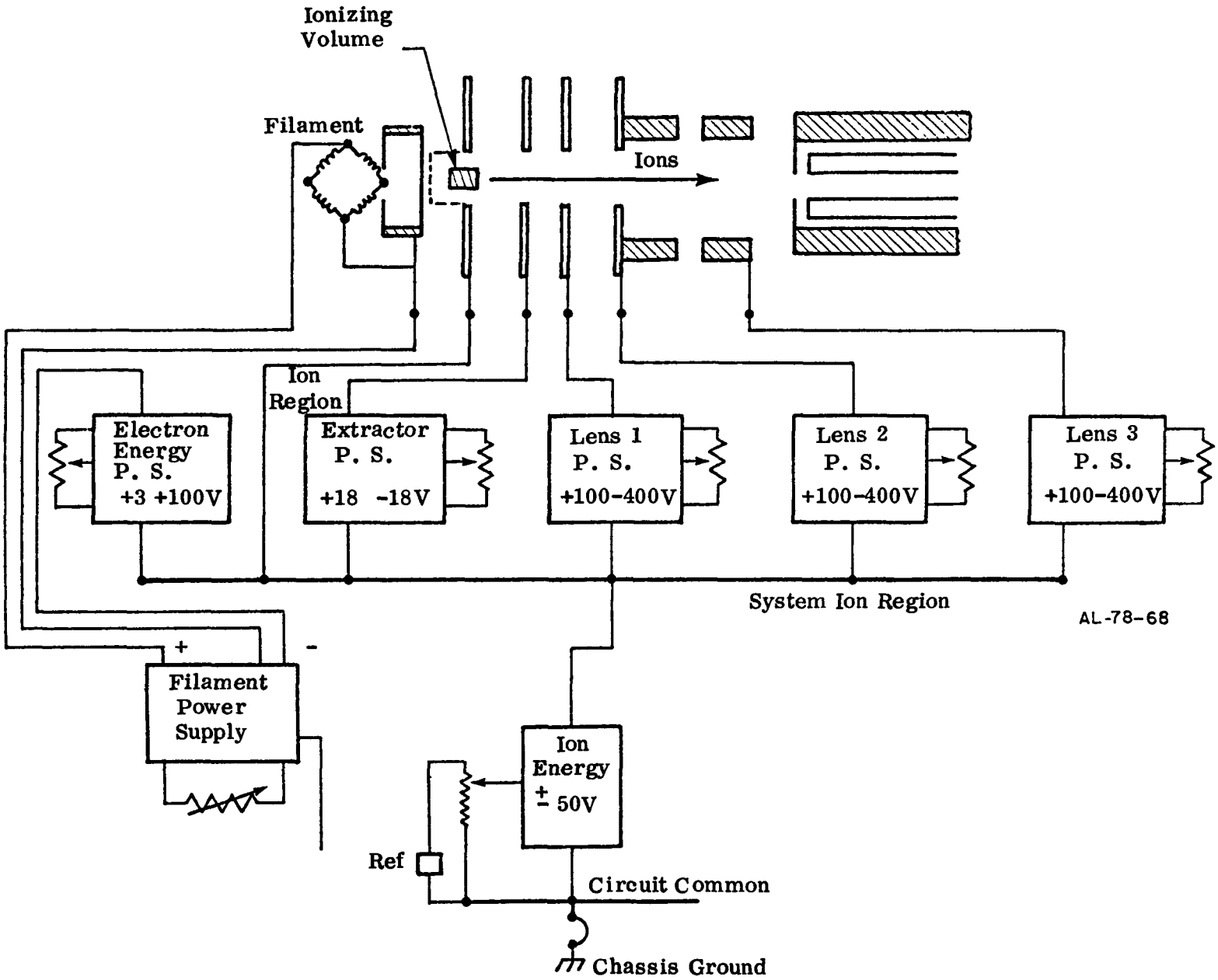

Figure 4.12 Block Diagram of Extranuclear Ionizer Control

The charged particles are then drawn into the Channeltron particle multiplier, a drawing of which is given in Figure 4.13. The multiplier is mounted off-axis, but the high voltage applied to the front is sufficient to reach through the hole in the mass spectrometer casing and cause the particles to turn two fairly sharp corners to arrive at the multiplier. Photons, and other uncharged particles are intended to pass straight through a smaller on-axis hole in the Faraday plate without striking the detector. (However, we seem to have some problem with large signals at random masses, whenever particles are introduced into the flame.)

The Faraday plate can be used with a picoammeter as an ion detector, to test the gain of the particle multiplier (normally on the order of 10^6). The multiplier operates by emission of electrons from its surface when struck by an energetic particle. These electrons are drawn back along the horn by the potential gradient applied to the multiplier, creating a growing cascade of electrons which is taken out through the signal lead as multiplier current.

When detecting positive ions, this current and the signal lead are at ground potential, and any one of several methods may be used to detect it. For weak signals, we take the current out directly and measure it with a picoammeter. Stronger signals can be converted to voltages by measuring across a load resistor, often the 1 MΩ internal resistance of the oscilloscope. The ramp output of the oscilloscope can be used to repeatedly sweep a desired portion of the spectrum. Or, the beam can be chopped, either with a mechanical rotating chopper for neutrals or by imposing a square wave voltage on the shift plates for ions. The mass spectrometer can be scanned very slowly and the chopped signal detected by a PAR HR-8 lock-in amplifier to get better sensitivity.

There is one very significant difference in the case of negative ion detection. Now the front end of the particle multiplier must be at a high positive voltage, to draw out the negative ions from the particle multiplier. However, the back of the multiplier must still be at a high positive potential with respect to the front, to move the electrons along as they multiply. This leaves the signal lead at a very large positive voltage with respect to ground, typically 4000 volts. This requires several modifications, which are shown in Figure 4.14.

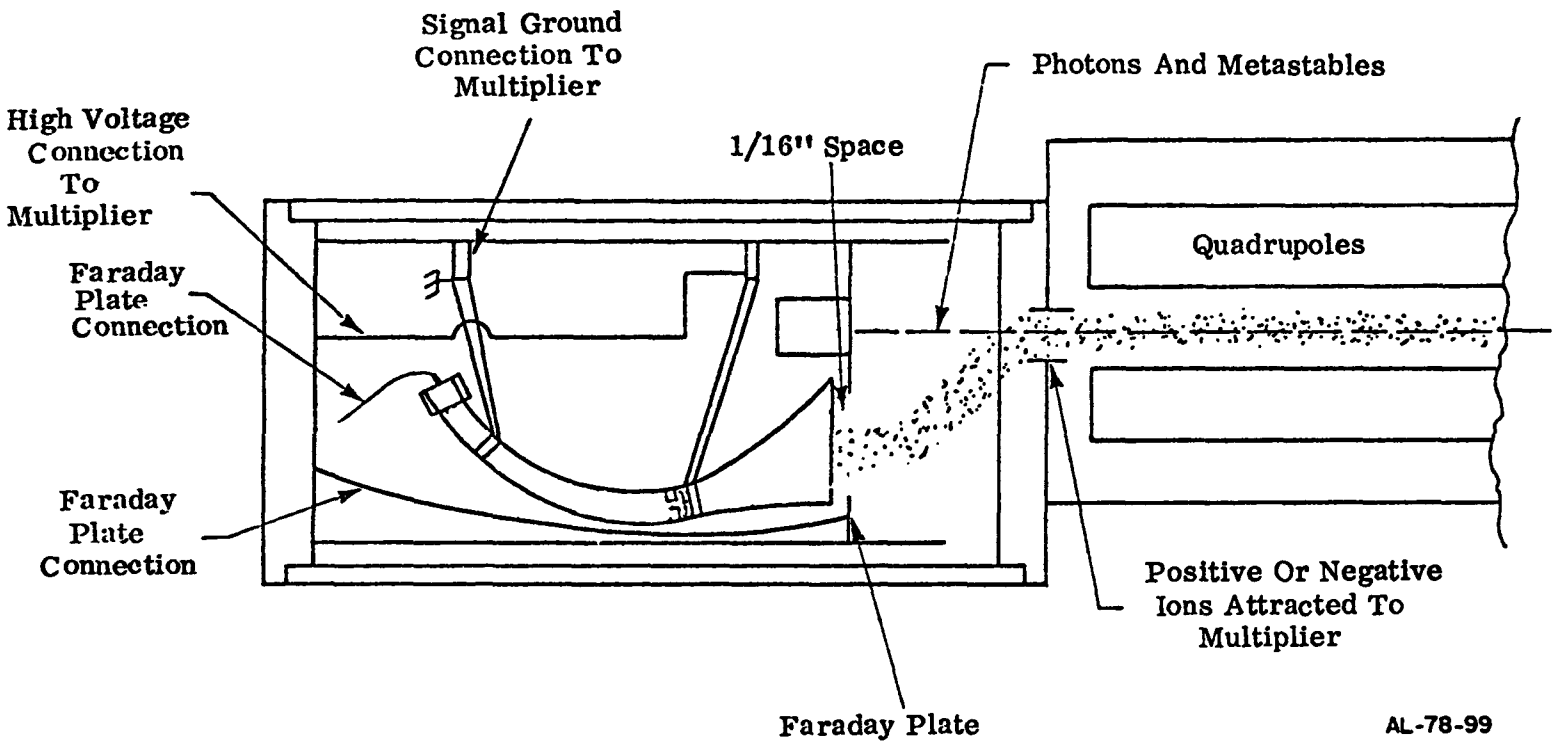

Figure 4.13 Channeltron Particle Multiplier

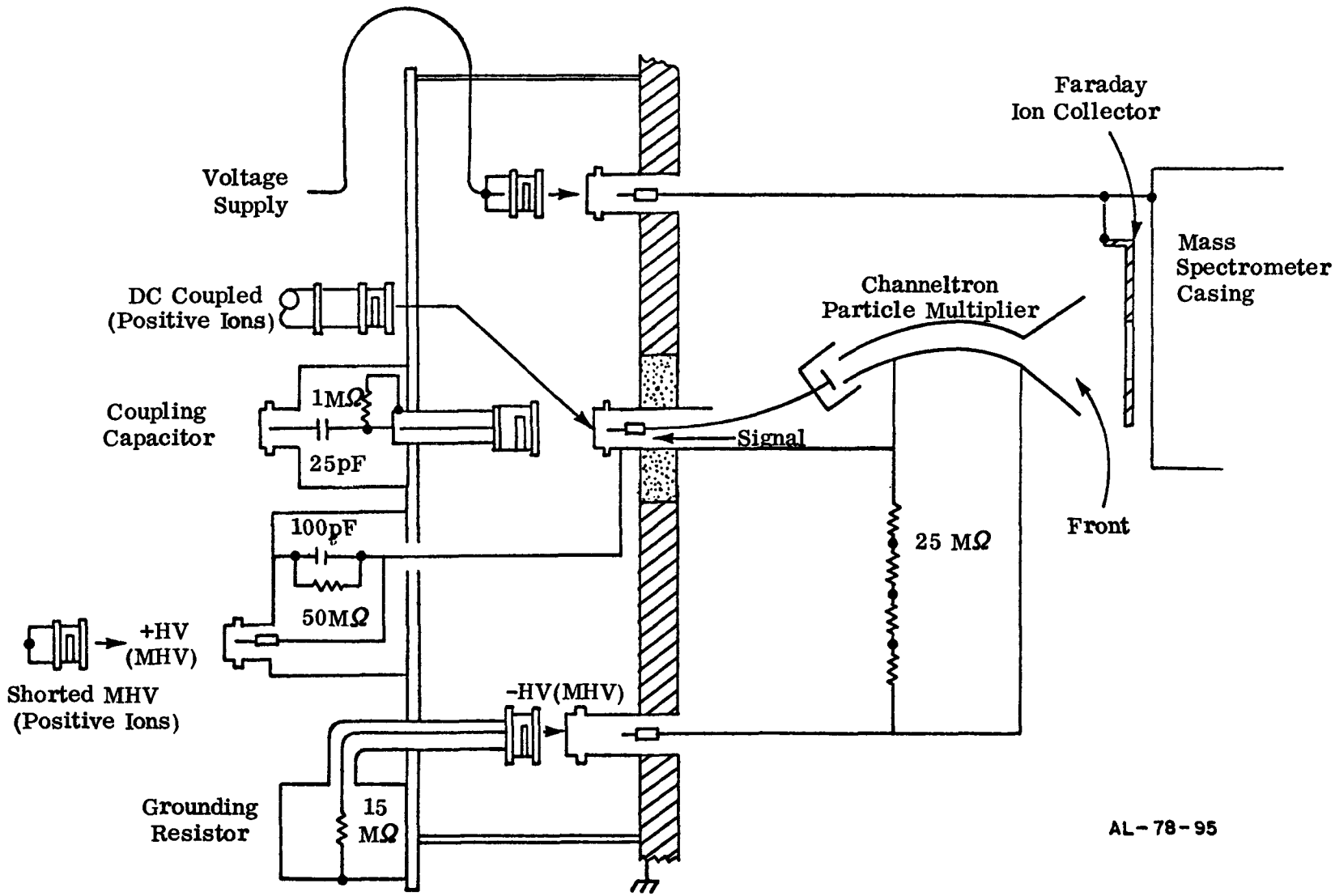

Figure 4.14 Triaxial Particle Multiplier Output Circuitry.

First we must avoid any spurious signals caused by leakage currents at the vacuum feed-through from the signal lead through the insulation to ground. This is done by separating signal and ground with a guard ring which is held at the same high potential as the signal. Leakage from signal to guard ring is zero, while leakage from the guard ring (connected directly to the high voltage power supply) to ground does not affect the signal. The presence of this guard ring means that the signal feed-through is a triaxial connector. Such a connector was constructed by potting MHV connectors into the vacuum chamber flange, and is shown in Figure 4.14.

A second problem is that detection must be done through a high voltage coupling capacitor. This in turn means that the signal must be modulated, either by chopping the beam or by rapidly scanning a mass spectrum. Further, we note that the high voltage blocking capacitor we were able to obtain is so small that when it is coupled to an ordinary high impedance input like that of an oscilloscope, the resulting time constant is extremely short and only derivative signals would be seen. To avoid this, a high impedance current preamplifier is used, whose circuit diagram is given in Figure 4.15.

A final problem associated with obtaining a signal from negative ion mass spectrometry is that we must float the mass spectrometer casing and multiplier housing off ground. This causes it and the signal to be most susceptible to pickup of the quadrupole RF fields. To filter this out, the simple RC filter also shown in Figure 4.15 is needed.

A last very useful piece of apparatus is the argon ion discharge source shown in Figure 4.16. This simple device cleanly produces a high density of Ar^+ ions which allows optimization of ion optics settings and studies of sampling efficiency. It is simply a discharge from six sharp tungsten pins through around 20 torr of argon to the sampling cone, which serves as the other electrode. The discharge can be initiated with a voltage of 900 to 1000 volts, and maintained at under 500 volts. Either polarity will work, but we sample more ions if the pins are positive. The discharge is very diffuse, rather than arcing to a single point on the sampling cone.

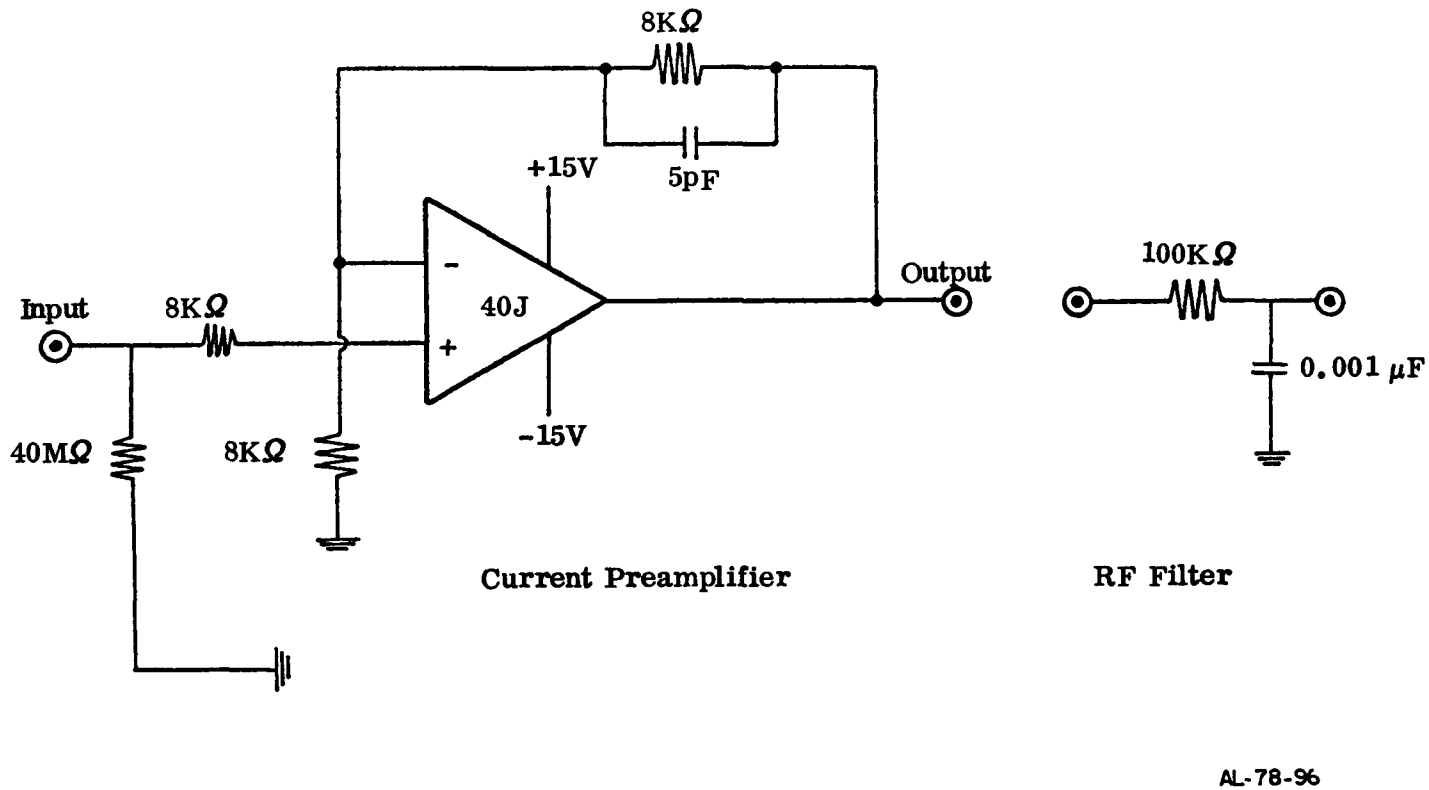

Figure 4.15 Signal Current Preamplifier and RF Filter Circuits.

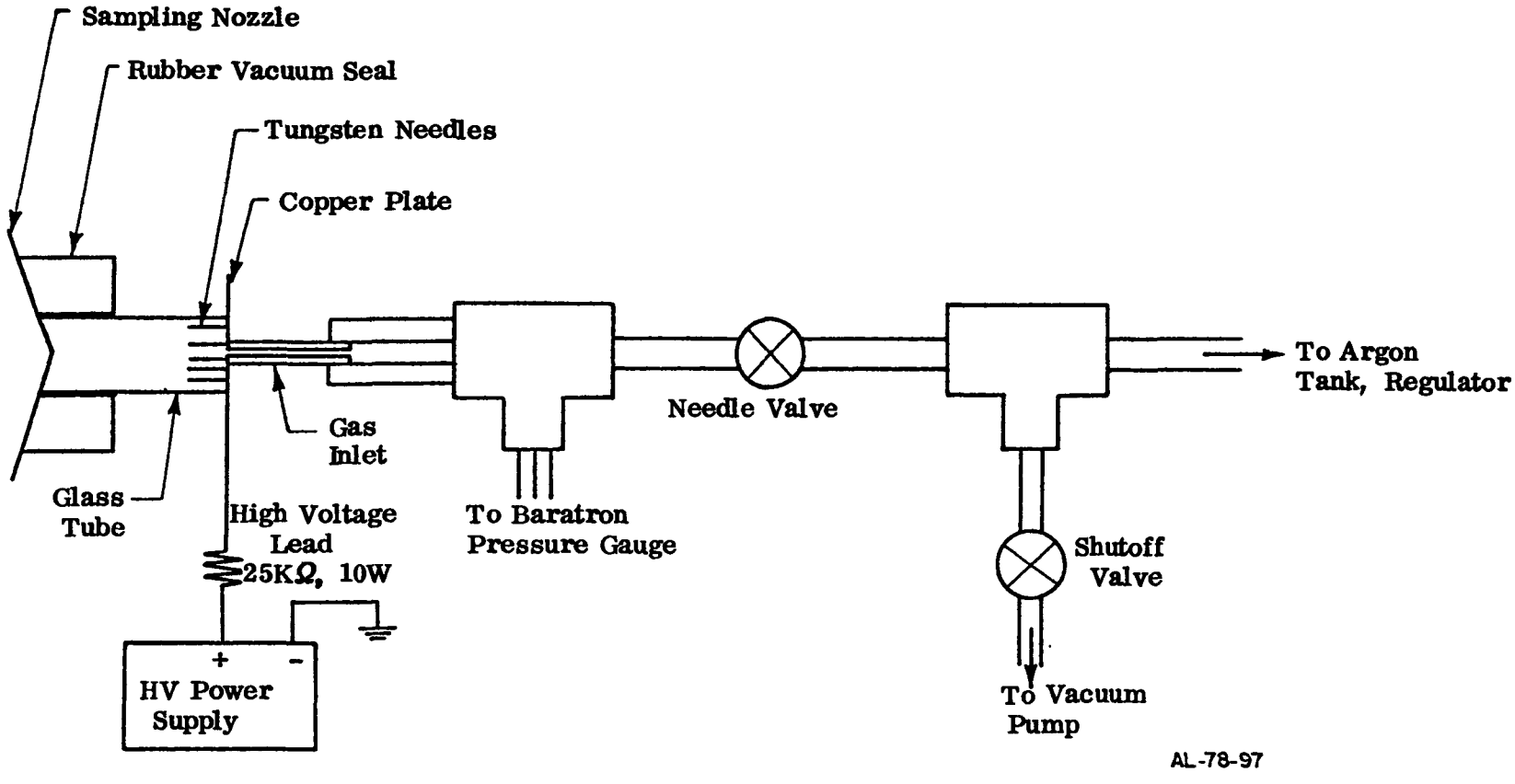

Figure 4.16 Argon Discharge Ion Source

4.2.2 Neutral Beam Sensitivity - Theory And Experiment

The theory underlying the formation of a molecular beam from a high-pressure nozzle source has been discussed in detail by a number of authors [3-7]. In this section, we wish to exercise this theory in an order of magnitude fashion for some of the more important beam parameters, in particular beam density. It is instructive to compare the calculated results with the observed performance of the apparatus, most importantly to the signal produced at the mass spectrometer detector by a beam of neutral molecules.

We begin with a calculation of the gas density in front of the skimmer orifice. We do this by assuming the flow through the hole to be effusive, and the flow upon entering the first vacuum chamber to be a free jet expansion. These assumptions, though not perfectly valid, have been shown to give reasonable answers for working systems [3].

The number of molecules per second passing through the sampling orifice is given by

$$n_o \bar{c} a_o / 4 \tag{1}$$

where for 1 atmosphere pressure and a temperature of 300^oK the density n_o is 2.67×10^{19} molecules/cm^3, the average velocity $\bar{c}$ is 4.75×10^4 cm/sec (for nitrogen), and we use our present sampling orifice area a_o of 3.2×10^{-4} cm^2. For these values the flow through the sampling hole is 4×10^{20} molecules/sec. In sampling higher temperature gas, the density decreases as 1/T, but the velocity increases as $T^{1/2}$, so that for a temperature of 1500^oK the flow through the hole has only decreased to 1.8×10^{20} molecules/sec.

The beam density a distance L from the sampling orifice is simply

$$n_o a_o / 4\pi L^2 \tag{2}$$

If we choose L to be the present sampling hole to skimmer hole distance of 1.25 inches, we find the density in front of the skimmer for the above conditions to be 4.6×10^{13} molecules/cm^3, or 1.3×10^{-3} torr. Under these conditions, the pressure gauge for the outer vacuum chamber usually reads around 6×10^{-4} torr. The gauge, however, is located on the far wall of the vacuum chamber from the sampling hole, and so a somewhat higher density is expected in the area around the skimmer than at the gauge. An average pressure of 6×10^{-4} torr or a density of 2×10^{13} molecules/cm^3 coupled with the flow of 4×10^{20} molecules/sec computed above imply a pumping speed of 2×10^7 cm^3/sec or 2×10^4 liters/sec, twice the nominal rating for our 16 inch diffusion pump.

The flow downstream from the skimmer orifice is that of a supersonic nozzle beam. Several workers have derived expressions for the intensity (in molecules per second) of such beams, for instance [4]

$$a_s n_s U\left[(\gamma/2)M^2 \times 3/2\right] (1/\pi L^2) A \tag{3}$$

In this formula, a_s, the skimmer orifice area, is 2×10^{-3} cm^2, and we know n_s, the density at the skimmer, to be 4.6×10^{13} molecules/cm^3 from above. For L we choose the distance from the skimmer hole to the mass spectrometer ionizer, 42 cm, while for A we take the area of the hole connecting the second and third vacuum chambers, just upstream from the ionizer, which is 0.18 cm^2. The specific heat ratio, γ, is 1.4 for diatomic molecules, and the beam velocity U is given by[5]

$$U = \left[2 \left(\frac{\gamma}{\gamma - 1}\right) kT_o/m\right]^{1/2} \tag{4}$$

Where T_o, the source temperature, is 300°K, and m is the mass for a nitrogen molecule, U is 7.8×10^4 cm/sec.

Finally, in Equation (3), M is the Mach number. As the beam expands, the Mach number increases, so that at large distances L from the skimmer hole (and large Mach numbers) it is given by, for gases with a γ of 1.4, [5]

$$M = 3.65\,(L/D_s)^{0.4} \tag{5}$$

where D_s is the diameter of the skimmer hole. However, the Mach number does not increase without limit, but approaches an asymptotic value as the density and therefore the interaction between gas molecules decreases. A formula for this terminal Mach number which has been verified experimentally is, for gases with a γ of 1.4, [6]

$$M = 1.67\,(Kn_o)^{-0.286} \tag{6}$$

In this expression, Kn_o is the Knudsen number at the sampling orifice and is the ratio of the mean free path λ_o to the sampling orifice diameter D_o. For nitrogen at room temperature and atmospheric pressure, λ_o is 6.5×10^{-6} cm, while our D_o is 2×10^{-2} cm, so Kn_o is 3.25×10^{-4}. This small Knudsen number, incidentally, is one measure of the degree to which we are sampling the unperturbed bulk gas. With it, we calculate a terminal Mach number of 16.6. Equation (5) shows that this Mach number is reached in slightly more than 2 cm from the skimmer.

Now we are ready to employ Equation (3) to compute the beam intensity at the mass spectrometer ionizer. We obtain 4.5×10^{13} molecules per second. To calculate the beam density we expect at the ionizer, we divide by the beam velocity U and the collimating orifice area A and obtain 3.2×10^{9} molecules/cm^3, which is 1×10^{-7} torr.

We can check on the validity of this beam density calculation by comparing the heights of mass peaks when the beam is admitted to the mass spectrometer chamber with the peak heights due to residual gas only. (This discussion assumes that the volumes of beam and residual gas ionized are equal). The largest residual gas peak occurs at mass 28, due primarily to CO, and is seen to be perhaps one-fifth of the

total gas by comparing with the other peaks. We commonly obtain bulk pressures in the mass spectrometer chamber of 2×10^{-7} torr. Under these conditions, when the beam is allowed to enter the mass spectrometer chamber, the mass 28 peak increases by a factor of around five, due now to nitrogen, which is, of course, four-fifths of air. In short, the beam pressure implied by these observations is of the order of 2×10^{-7} torr, or the same or slightly higher than that calculated. In view of the rough nature of the calculation, and especially its sensitivity to several poorly known parameters, this agreement is more than adequate.

Now we wish to calculate what the magnitude of the signal at the particle multiplier should be for a beam density of 3.2×10^{9} molecules/cm^3. We must begin by calculating the number of ions produced for a given ionizer electron beam current. Such ionization efficiency calculation are presently much more difficult to do accurately than those done above, so the discussion from here on will contain parameters which are less well known and be more qualitative.

The rate of production of positive ions I_+ by the collision of electrons with neutral molecules M can be written as

$$I_+ = K [e] [M] V \tag{7}$$

where V is the ionizing volume and where the rate constant

$$K = V_{rel} \sigma_{ion} \sim V_{el} \sigma_{ion} \tag{8}$$

is essentially the product of the electron velocity (which is much greater than the ion velocity) and the ionization cross section σ_{ion}. The product V_{el} [e] is the electron current, typically 3mA or greater. For nitrogen, the ionization cross section for 100 eV electrons is about 2×10^{-16} cm^2. If we assume (somewhat arbitrarily) an ionizing volume thickness of 0.2 cm and a beam area in the ionizer of 0.25 cm^2, we obtain for 3mA and a beam density of 3.2×10^{9} molecules/cm^3, an ion current of 1×10^{-10} A.

This can also be expressed as an ionization efficiency of 1×10^{-3} A/torr. Extranuclear designs its ionizers for especially high efficiency, due to factors not considered in these simple calculations. They state that their efficiencies are on the order of 10^{-2} to 10^{-4} A/torr, with the smaller number being more likely in normal operation. If we accept this figure, and further assume loss through the quadrupole mass filter on the order of a factor of ten, we would expect a current entering the particle multiplier of 10^{-12} A. The particle multiplier has a gain of the order of 10^{6}. We observe the current output by it across a load resistor of 5×10^{5} ohms. Therefore, we might expect a peak height of 0.5 volts, and indeed this is precisely the nitrogen peak height commonly observed on the oscilloscope.

A parameter of some importance which did not enter the preceding discussion of beam intensity is the distance between the sampling nozzle orifice and the skimmer. The exact theory of the dependence of beam transmission on this distance is not well understood, but its effect on signal-to-noise ratio is easily explained. Figures 4.17 and 4.18 give the basis for sensitivity of detec tion of a modulated molecular beam. The noise in the modulated spectrum of Figure 4.17 is primarily due to fluctuations in the background gas pressure. The background gas is ionized along with the beam, and fluctuations which happen to be near the chopping frequency are detected by the lock-in amplifier. (Since the ionizer is turned off when detecting flame ions, this source of noise is removed.) Figure 4.18 shows the background gas mass spectrun which must be discriminated against.

From this discussion we see that an increase in beam signal means almost an equal increase in signal-to-noise ratio. The improvement resulting in increased beam signal was prompted by the receipt of a report on a very similar atmospheric pressure molecular beam mass spectrometer apparatus set up at NASA-Lewis Research Center [7]. They had done studies of beam intensity as a function of sampling orifice to skimmer orifice distance. We had found such curves before in the literature, but only up to a few hundred torr, while the NASA-Lewis results extended to one atmosphere source pressure. With this new information, we moved the skimmer back to a position 1.25 inches from the sampling orifice. This resulted in an increase in signal of a factor of five to ten, which since it did not contribute to background gas

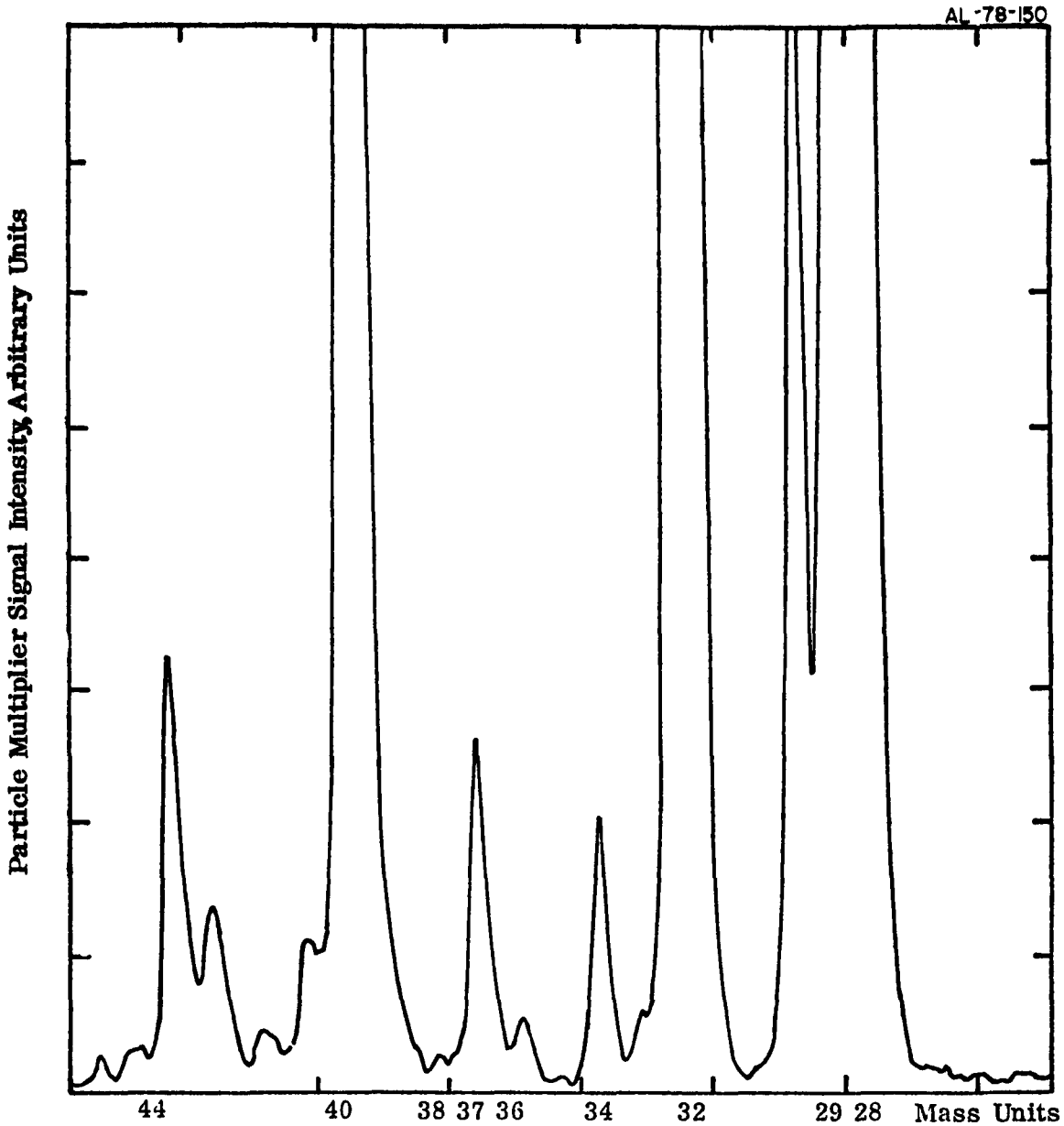

Figure 4.17 Mass Spectrometer Scan of a Modulated Beam of Room Air.

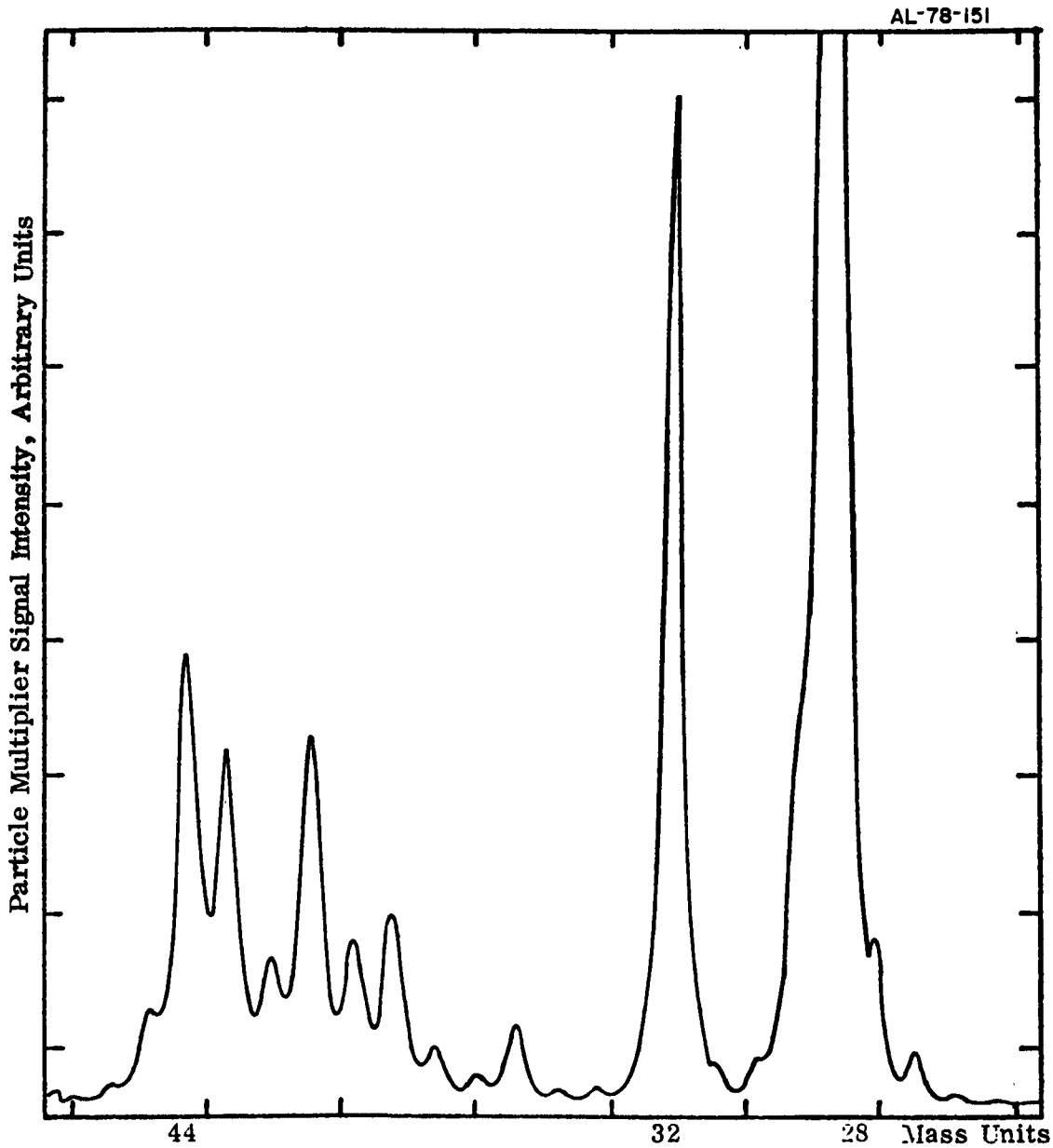

Figure 4.18 DC (Unmodulated) Mass Spectrum of Vacuum Chamber Background Gas.

fluctuations meant an identical increase in signal-to-noise ratio. We can now observe the argon isotope with mass 38 in room air at a signal-to-noise ratio of 5 to 1. Since Ar^{38} is 5.6 ppm in air, we have achieved a sensitivity to neutrals approaching 1 ppm. Figure 4.19 is an example of this improved sensitivity in our usual testing region including the rare argon isotopes.

4.2.3 Argon Ion Observations

While using the argon discharge ion source to maximize all the ion optics voltage settings, we made some observations designed to check whether the voltages applied, in particular the drawout voltage on the skimmer, resulted in sampling behavior which was predictable by simple theory. This theory could then assure us that sampling was indeed representative of the ion source, whether discharge or flame. With the system parameters in our eventual operating regions, we found quite good agreement, behaviour which encouraged us to go on to look at flame ions. There were other features, which have not been totally explainable but which seem to be interesting and which we will discuss here. In most cases, these features may have been due to peculiarities in the discharge ion source and have not been seen with flame ions.

The problem which arises is that when a neutral plasma is expanded into the first vacuum chamber, the electrons, having much larger thermal velocities, can quickly reach the large expanse of grounded wall area and escape. This leads to a plasma in front of the skimmer orifice which is primarily ions, and in the case of the argon discharge source almost all positive ions. We wish to derive the equation governing the space-charge limited current from this cloud of ions, the current when the field from the remaining ions just balances that from the voltage applied to the skimmer. Obviously, the situation in which the skimmer voltage is insufficient to draw out all ions entering through the sampling orifice is just the one we want to avoid. We want instead to operate above the space-charge limited voltage region, and draw out all the ions.

We now derive the equation, known as Child's Law, for the space-charge limited current for the simple case of charges originating at a plane surface at potential $x=0$ at potential $V=0$ being accelerated to a plane $x=b$ at potential $V=V_0$.

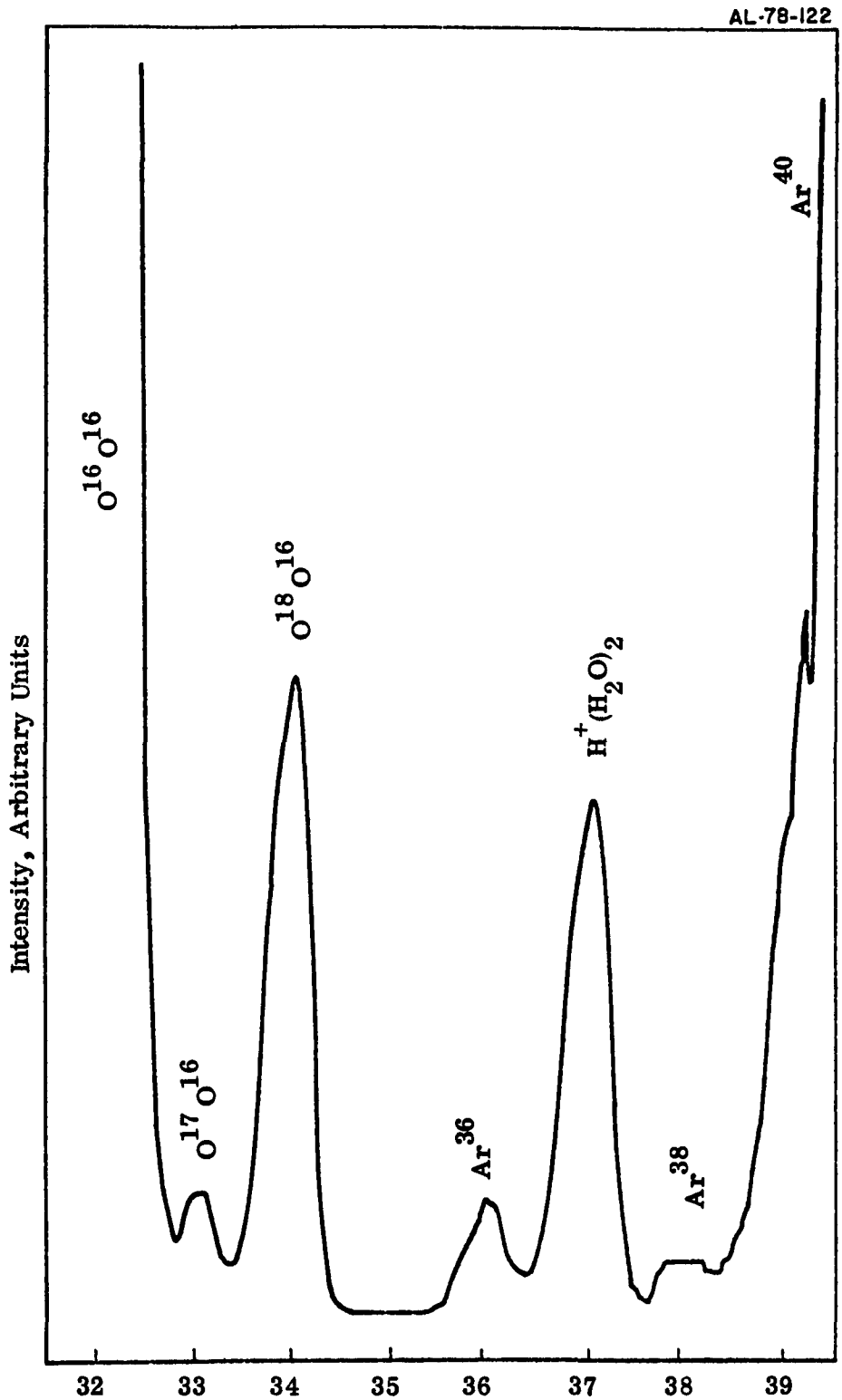

Figure 4.19 Mass Spectrum of Room Air, Showing Increased Sensitivity From Adjusting Nozzle - Skimmer Distance.

Although this geometry is idealized, other geometries, such as emission from a small circular cylinder to a larger concentric cylinder, change the results by only a small numerical factor. This discussion is a standard feature of textbooks on electrostatics [8].

We begin with Poisson's equation in one dimension,

$$d^2V/dx^2 = -\rho/\epsilon \tag{9}$$

where ρ is the charge density and ϵ the dielectric constant. The energy of the charges at any point x where the potential is V is

$$1/2\ mv^2 = q(V-V_o) \tag{10}$$

The current density is given by

$$i = \rho v \tag{11}$$

or, using Equations (9) and (10),

$$d^2V/dx^2 = -i/\epsilon\ (m/2q\ (V - V_o))^{1/2} \tag{12}$$

This can be integrated twice with the appropriate boundary conditions to obtain Child's Law,

$$i = \left(4\epsilon/9\right)(2q/m)^{1/2}\left(V_o^{\ 3/2}/b^2\right) \tag{13}$$

From this equation, the behavior we expect in the current passing through the skimmer orifice and eventually to the Channeltron particle multiplier (or the current onto the skimmer cone) as the skimmer voltage is increased is, starting with zero at zero skimmer voltage, an increase following the $V^{3/2}$ law until eventually a plateau is reached at which point essentially all the charge has been drawn out. The

solid line in Figure 4.20a is indeed such a curve. It shows that for the charge densities given by the argon discharge ion source, the plateau above which we can expect representative sampling is certainly attained by 100 volts. For flame ions this plateau comes somewhat higher. We will give a calculation of that value in the discussion below of all ion optics voltages used in flame studies.

The dashed curve of current as a function of skimmer voltage in Figure 4.20a was obtained on a different day with all known system parameters the same as for the solid curve. For this reason, the difference between the two curves, the much larger decrease at high skimmer voltages, is somewhat puzzling. A possible explanation is that very strong fields around the cone-shaped skimmer actually accelerate ions into trajectories in which they miss the sampling hole. The possibility is perhaps strengthened by the observation that current to the skimmer as measured by a picoammeter increases monotonically in this voltage region. The effect might change in character from day to day with buildup of pump oil and other dielectrics on the skimmer, influencing its properties as a lens. Whether due to lensing or not, such a decrease in signal at high skimmer voltages has not been observed with flame ions.

For skimmer voltages above space-charge limited values we expect the current received at the detector to increase linearly with increasing charge density outside the sampling hole. To test this using the ion source, we made the assumption that the charge density ought to be proportional to the current passing through the discharge, which in turn ought to be proportional to the voltage applied across it, above a threshold voltage. For this reason, the linear behavior shown in Figure 4.20b is certainly encouraging. The discharge is indeed observed to light somewhat under 500 volts. What is not so easily understood is the fact that the extrapolation of the observed current, and presumably the source charge density, passes through zero not at zero volts across the discharge, but at the threshold voltage. However, this seems to be a characteristic of the discharge. In any case, it is in the linear region where we wish to do all our sampling.

In the region of skimmer voltage where we believe the sampling to be space-charge limited, we would expect no increase in observed current with increasing source voltage. As seen in Figure 4.21, however, this is not the case, indicating that our

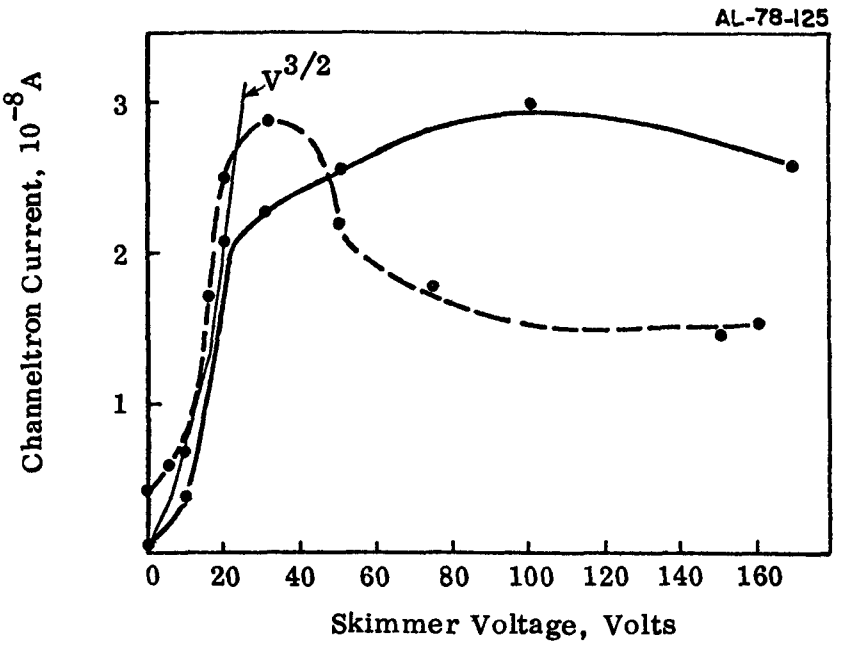

Figure 4.20a Current a Channeltron With Argon Ion Source Voltage at 700V as a Function at Draw Out Voltage Applied to the skimmer.

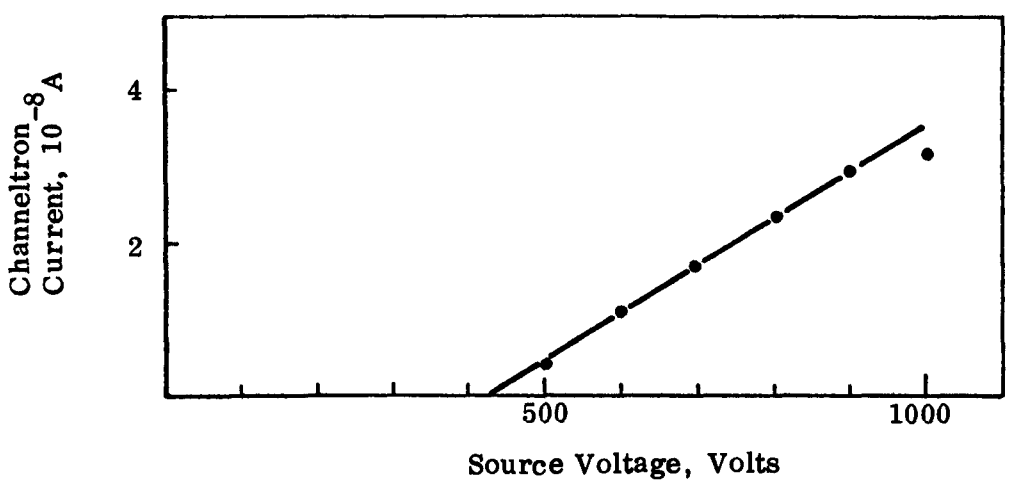

Figure 4.20b Current at Channeltron Particle Multiplier (With No Mass Selection) as a Function Of Argon Ion Source Voltage, to a Skimmer Voltage of -168V.

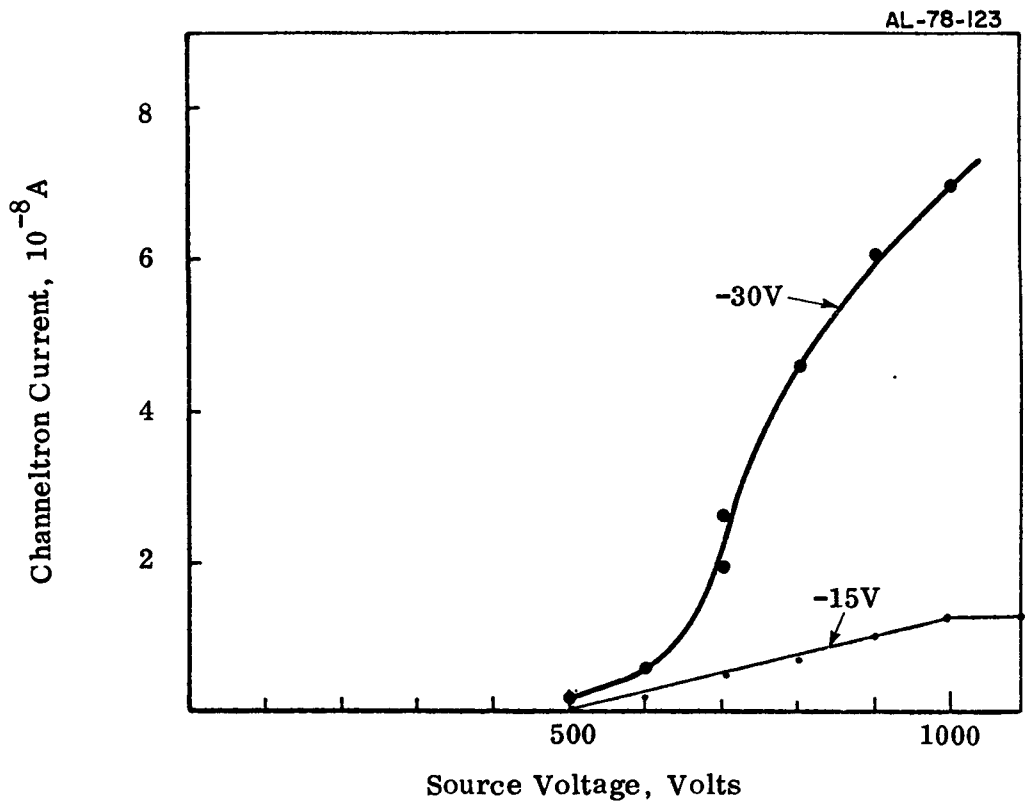

Figure 4.21. Current at Channeltron Particle Multiplier (With No Mass Selection) as a Function of Argon Ion Source Voltage, for Voltages of -15V and -30V of the Skimmer

model of sampling from the discharge source is not complete. The current actually increases, though in a somewhat nonlinear fashion. One possible explanation for this can be found in the observation that although only a small fraction of the total voltage drop is across the discharge, the ions are formed at some potential above ground, roughly 30 volts for the nominal operating parameter of 700V discharge voltage. This adds another term to the conservation of energy equation (2). If we consider the limiting case of this energy E being large compared to that from the accelerating skimmer voltage, Equations (10) and (11) shows the current to be proportional to $E^{1/2}$. Further, Equation (12) now has d^2V/dx^2 being proportional to a constant, which will mean that upon integration i is linearly proportional to V_o. These differences of one-half in the exponents for dependence on source and skimmer voltage are not easily verified from the data, so it is possible that the behavior shown in Figure 4.21 is simply a peculiarity of the discharge source. It is also possible that the peculiar shape of the skimmer cone causes deviation from the simple model behavior at low skimmer voltages.

We can now use our understanding of the space-charge limit, together with the theory of electrostatic optics [9-10], to justify the typical skimmer and lens voltages shown in Figures 4.9 and 4.11. The agreement with theory is not always totally satisfactory, but then ion optics is a field notorious for its dependence on other parameters than those considered by simple theory. In any case the discussion which follows serves to exhibit the basic principles of ion optics, as well as some of their limitations.

We begin with a consideration of the skimmer voltage, which in turn begins with a calculation of the current we expect that voltage to draw out. For flame ions, we estimate this current by

$$I = n_e e \bar{c} A_o/4 \tag{14}$$

When the ions pass out of the skimmer into the first lens, they again undergo focusing which can only be estimated by approximating the actual geometry. There have been extensive calculations for the focal lengths of two cylinder lenses, both as a function of the ratio of voltages and the ratio of cylinder radii. If we approximate the actual lens by one with a voltage ratio of 2 (for a decelerating lens) and with a first cylinder with twice the radius of the second, we find a focal length (f_2) of around 20 inches [9].

Now we must combine the effect of this weak focusing lens with the strong defocusing lens which precedes it, using the formula [10]

$$1/f = 1/f_1 + 1/f_2 - d/f_1 f_2 \tag{18}$$

where d is the separation between the lenses, around 7 inches. The focal length of the compound lens becomes -8 inches.

The main focusing action occurs during the passage from the high potential of Lens 1 to the lower potential of Lens 2. Once again, this is a decelerating lens, however, like all two cylinder lenses it has a positive focal length [10]. Moreover, the focal length depends only on the voltage ratio, the radii of the cylinders, and their separation, not on the masses of the charged particles or their initial velocities. If we consult the tabulations of focal lengths for two equidiameter cylinders with negligible separation, we find for a voltage ratio of 3 a focal length for 1.5 inch diameter cylinders of somewhat over 5 inches. It is a general property of such lenses that the focal length decreases with increasing voltage ratio. These two lenses have at times been operated successfully with voltage ratios slightly over 4, which would imply an unsatisfyingly small focal length.

The potential differences down the rest of the ion optical system seem generally too small to greatly affect the beam. For example, if we estimate the lensing between the second cylinder and the shift plate cube by two cylinders with a voltage ratio of 1.5, we find a focal length of 50 inches[10]. Used in the compound lens formula (18) this brings the focal length to just 5 inches. Since the hole in the mass spectrometer chamber is about five inches from the midpoint of this lens, we may believe that our ion optics do indeed focus the ion beam into the mass spectrometer and we do understand their behavior.

As an aside, we note that since as mentioned before the argon discharge produces ions at some positive potential with respect to ground, the second cylinder operates well at much lower negative voltages, or even slightly positive ones.

As a last instructive calculation, we will look at the potential difference ΔV required on the shift plates to give a required angular deflection α. The governing formula is (8)

$$\alpha = 1/2 \ (\Delta VL/Ud) \tag{19}$$

where the plate separation d and the plate length L are both 1.5 inches and the mean potential U is often around 35 volts. To deflect the beam by one inch out of the seven inches between the plates and the hole in the mass spectrometer chamber, α must be 0.14 radians. This implies a required ΔV of 10 volts. Indeed, 10 volts is found to be more than adequate to deflect the beam, and the shift plate voltages can be quite sensitive adjustments.

4.2.4 Positive Flame Ions

When we began positive ion mass scans of unseeded methane and air flames with the newly improved apparatus we found an unexpectedly rich mass spectrum, an example of which is shown in Figure 4.22. It soon became clear that although no seed was being fed into the flame, it was indeed being seeded by the evaporation of various alkali metal species which had been deposited on the walls in earlier attempts to study flame ions. With the knowledge of what seed materials were used, we can identify all the peaks in Figure 4.22. The large peak at mass 39 is, of course,

potassium, our primary seed material. The even larger peak at 133 is due to cesium, which though fed only sparingly as cesium carbonate has an even lower ionization potential than potassium. Feeding sodium bicarbonate gave the sodium peak at 23. The peak at 85 probably corresponds to rubidium, which was never fed in but could well be an impurity in the other three seed materials. The small peak approximately 16 mass units higher than potassium is most likely to be KO^+. This conclusion is not based on any previous experimental observation of KO^+, but rather on the low ionization potentials of several analogous species, like NaO^+ (around 6.5 eV) [11] and and Na_2O^+ [11] compared with K_2O^+ (around 5 eV) [12] as well as the higher ionization potential attributed to KOH^+ (7.5 eV) [12]. From these analogies, we would also expect to see a small peak corresponding to CsO^+. Looking in Figure 4.22 in the region sixteen mass units above cesium, we in fact find what appears to be two peaks. This feature is repeatable, even from day to day, but it is our opinion that there is in reality only one peak, that the twin peaks are an artifact due to poor adjustment of the quadrupole filter. This peak splitting is sometimes seen in neutral mass spectra in which the ion energy travelling down the quadrupole axis is too high. We have also seen it in the cesium peak, which can be given two or three maxima, depending on the mass region swept.

The peaks in Figure 4.22 are many mass units wide. In part this is for the same reason that we seem to have problems with peak splitting, that good resolution depends on control of the ion beam speed and trajectory as it travels down the quadrupole filter. For flame ions we have not yet had time to do careful searches for the optimum ion optics voltages. However, if the region scanned is reduced, and the resolution increased, one can obtain traces like the one in Figure 4.23. Here the peak at 41 is the minor isotope of potassium, with a natural abundance of 8 percent. This resolution of a minor species from a major one when they differ by only two mass units is quite encouraging.

Because of problems with sampling nozzle clogging due to deposition of seed and slag components, especially potassium hydroxide, it became our usual operating procedure to use the four-way solenoid valve to turn on the seeded coal feed for only that time needed to make a measurement. Using the oscilloscope to display the scan,

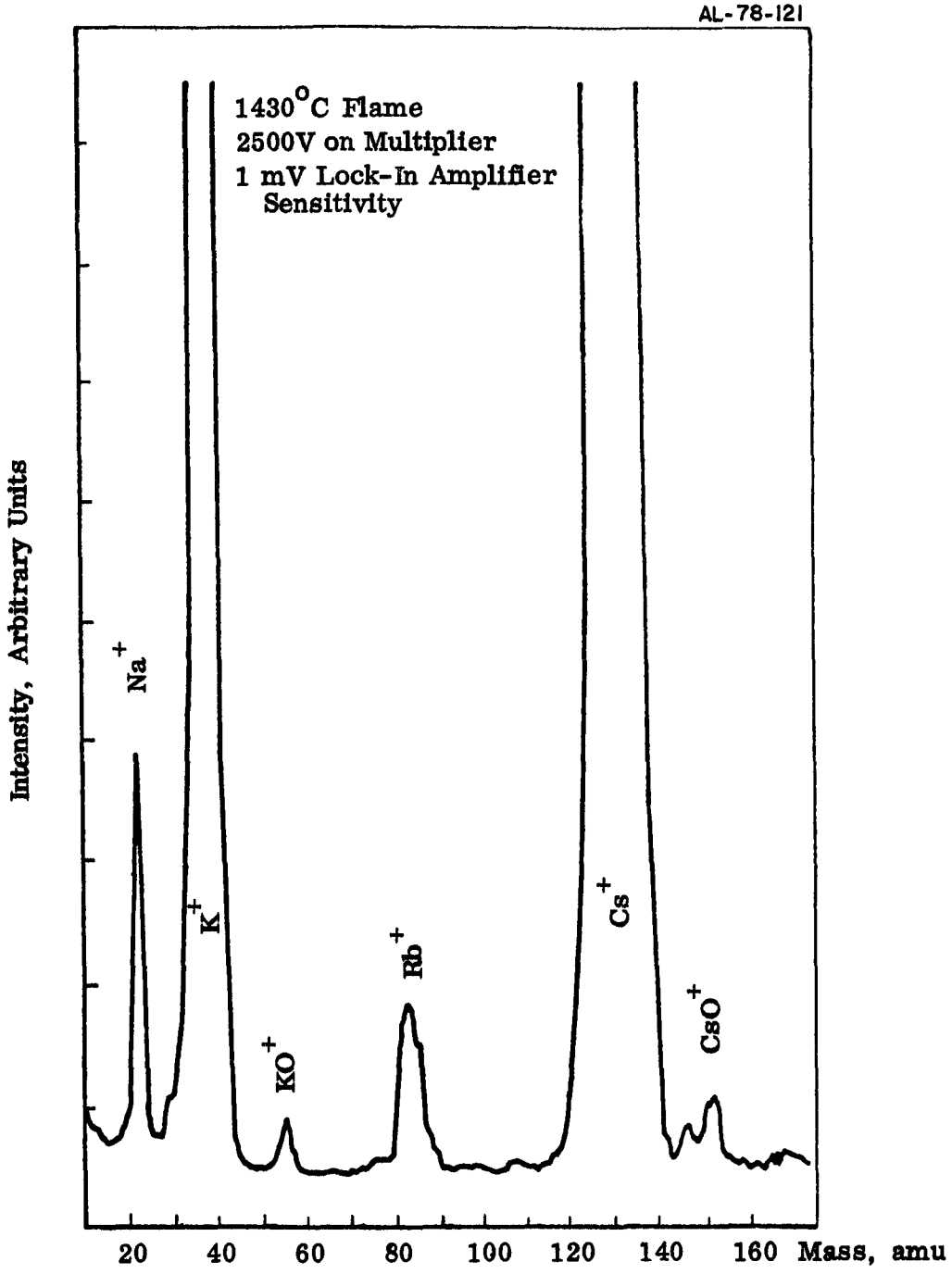

Figure 4.22 Mass Spectrum of Positive Ions Found in a Methane Flame Seeded by Evaporation From the Burner Walls.

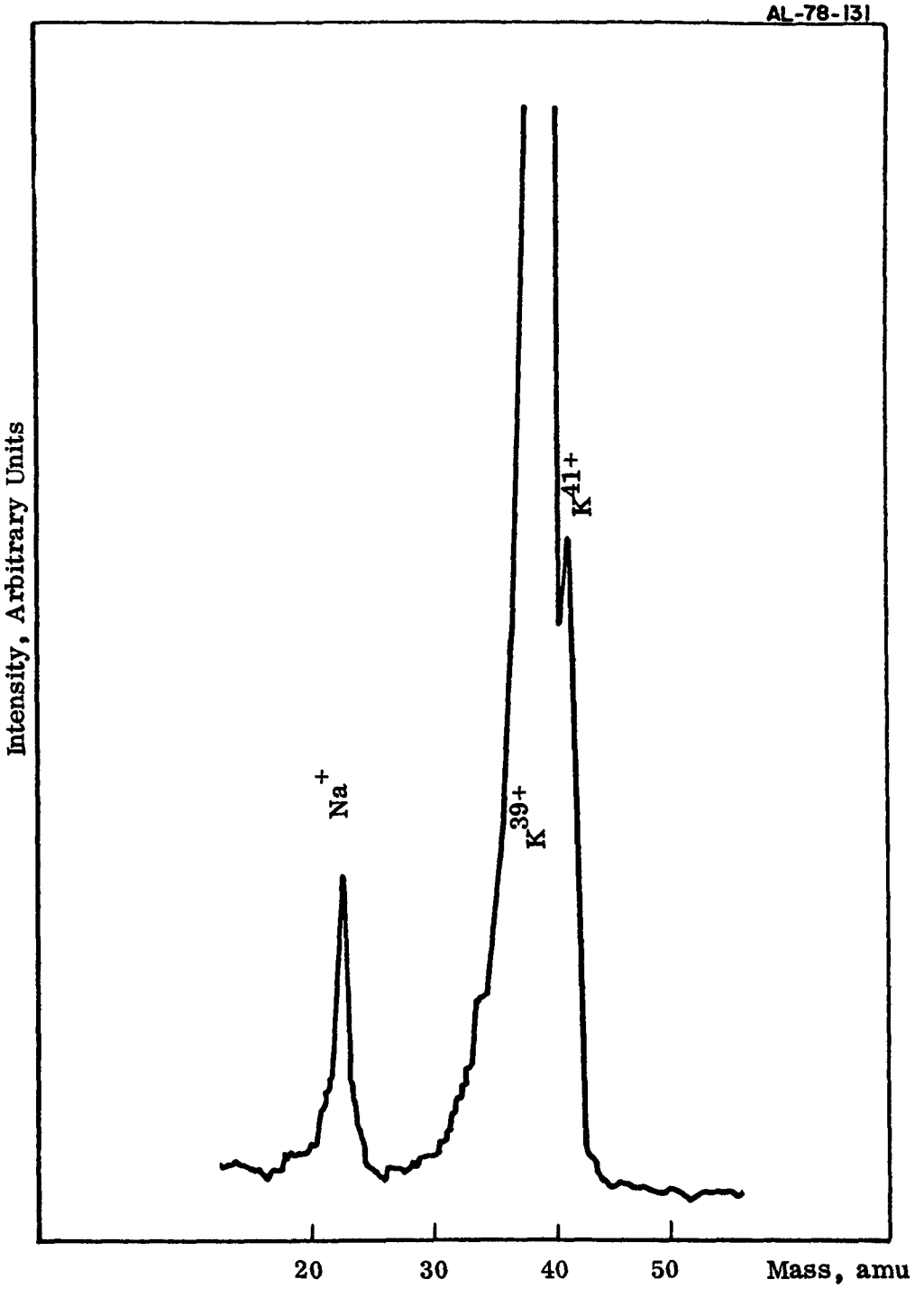

Figure 4.23 A Mass Spectrum of Positive Ions From a Methane Flame Taken at Higher Resolution Than the Preceding Figure.

this measurement time could be quite short. When feeding coal, however, we encountered another problem - large bursts of noise, at random masses, presumably due in some way to particles, which completely swamped the positive ion peaks. In an effort to discriminate against this noise, the frequency of the modulating square wave put on the shift plates was increased to around 1000 Hz. Then the lock-in amplifier was used to detect the chopped signal and display its average on the oscilloscope, which was swept at a rate of 10 msec/cm, allowing a large enough number of modulations per peak. One of the more successful scans taken by this method is shown in Figure 4.24. It shows what was also observed in more conventional oscilloscope traces, that feeding seeded coal causes the K^+ peak to increase by a large factor. No new positive ions were attributed to the coal, but none were expected. At times the other peaks, like cesium, would be seen to rise when potassium seed was added, presumably due to the rise in the overall level of ionization.

4.2.5 Negative Flame Ions

Figures 4.25 and 4.27 are mass spectra showing all the negative ion peaks currently seen using a methane flame seeded by the vaporization of whatever substances have been deposited on the walls of the burner. The figures differ only in the burner exhaust gas temperature achieved. In Figure 4.25 observations of the burner lining with the optical pyrometer gave a temperature of $1615^{\circ}K$. The corresponding gas temperature after correction of the bare wire thermocouple reading was $1650^{\circ}K$. In Figure 4.27, the wall temperature as read by the optical pyrometer had risen to $1675^{\circ}K$, indicating that the gas temperature was at least $60^{\circ}K$ hotter. We could not verify this using the gas temperature thermocouple because by this time it had been destroyed, as explained below.

By comparing the two figures, we can see that the small peak slightly above 60 mass units is not noise but has been consistently observed. Therefore, there are four peaks in the low temperature negative ion mass spectrum. We will discuss the identification of each of these four in turn, although only the largest peak has been positively identified, using tests detailed below. We will then speculate on the identity of the additional peaks in Figure 4.27.

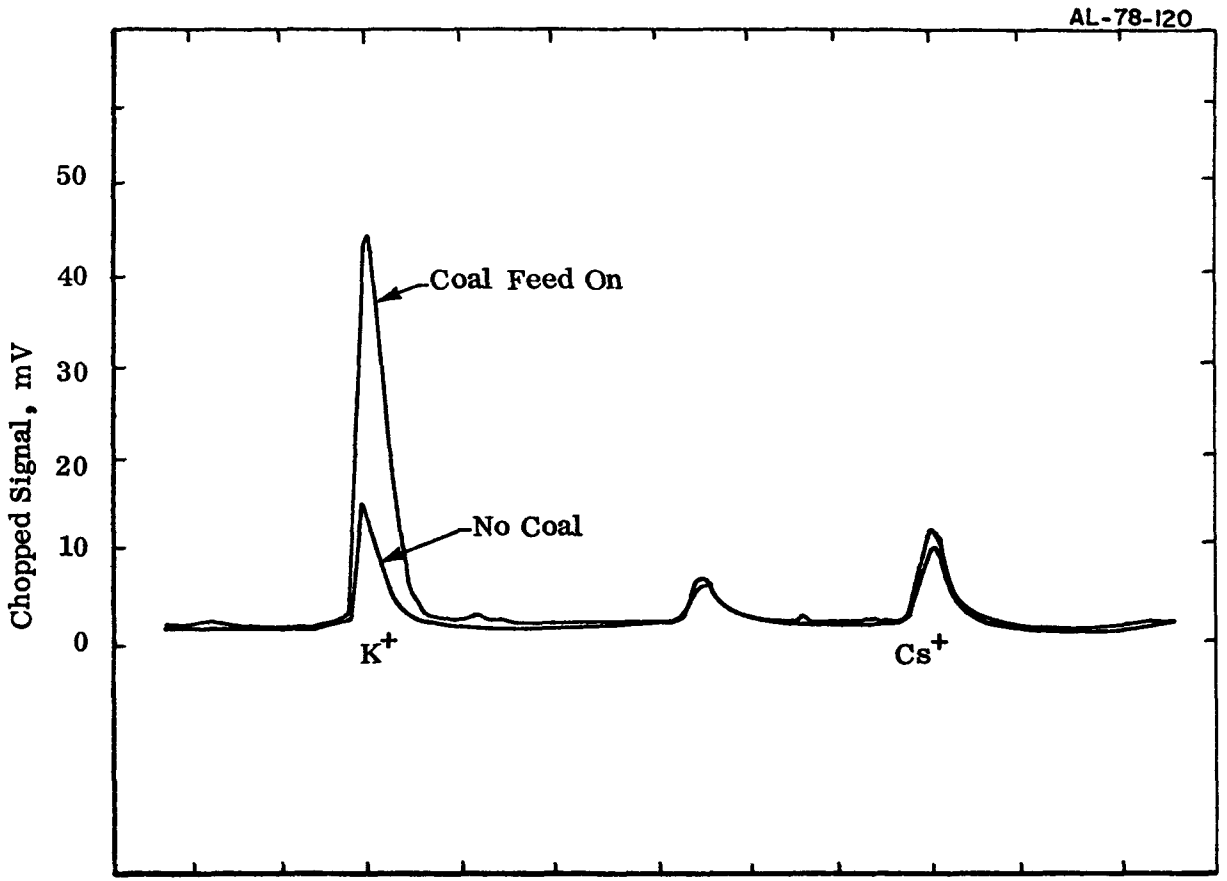

Figure 4.24 Double Exposure Oscilloscope Photograph of Positive Ion Mass Spectrum With and Without Feeding Potassium-Seeded Coal. Done by Rapidly Modulating the Beam and Displaying the Output of the Lock-in Amplifier on the Oscilloscope.

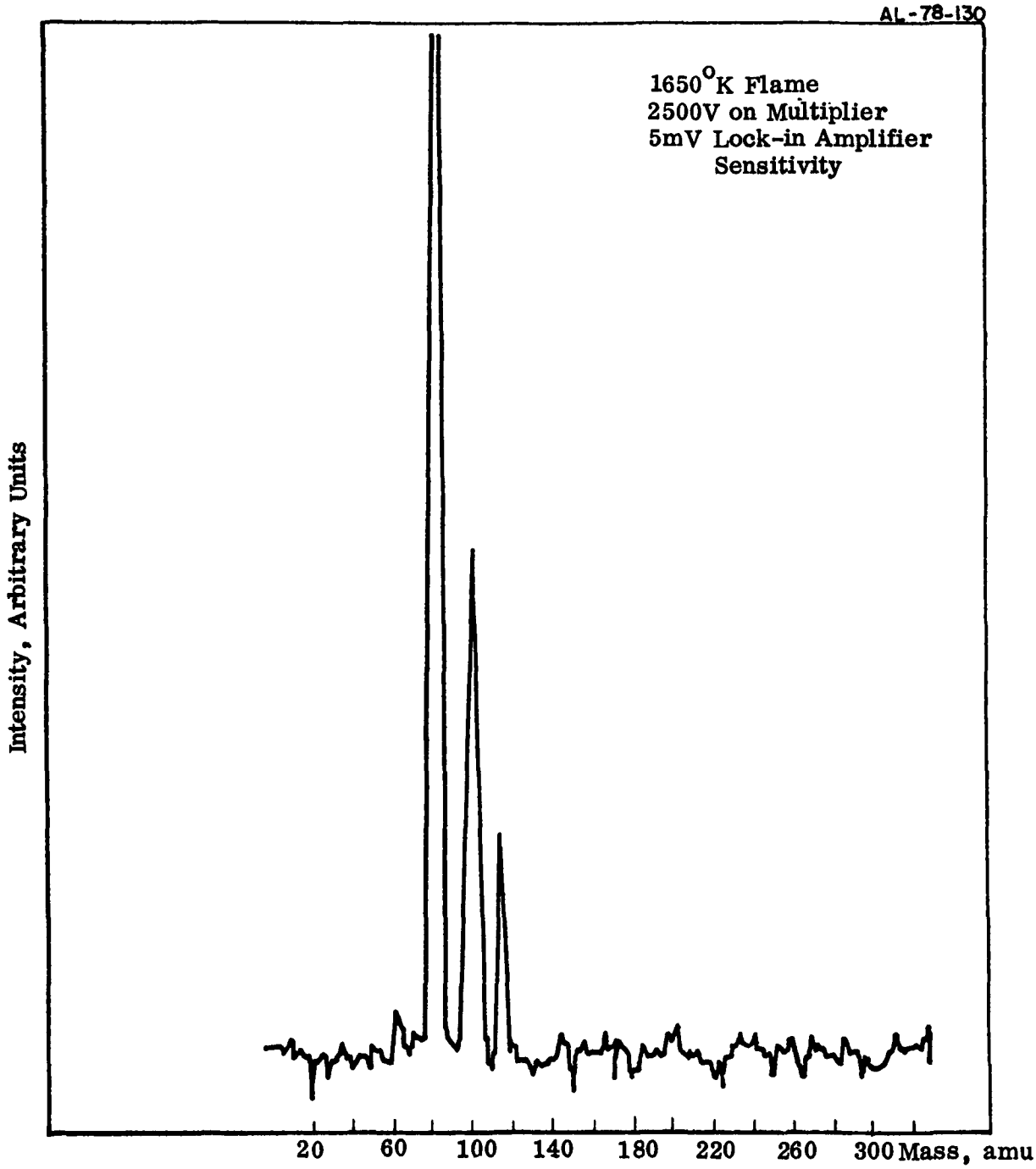

Figure 4.25 Mass Spectrum of Negative Ions Found in a Methane Flame Seeded by the Slag and Seed Vaporized From the Burner Walls.

The largest peak appears at a quadrupole setting of mass 79, plus or minus one or two mass units. The uncertainty arises because the mass tuning adjustment of the mass spectrometer is extremely coarse, and furthermore tends to need frequent adjustment. Therefore, position of the peak as measured by the mass spectrometer is not sufficient for an unambiguous identification. The identification as PO_3^-, which is indeed mass 79, was made on the basis of two experiments.

The results of the first experiment are shown in Figure 4.26. On the right, Figure 26b is a high resolution scan of the area around 79, showing the one peak found in an ordinary flame. Figure 4.26a is a scan taken immediately before, while some methyl bromide gas was being fed into the flame. This should give rise to equal Br^- peaks at masses 79 and 81. The fact that the lower of these two mass markers does occur at the position of the unknown peak identifies it as 79. Furthermore, since the lower peak is only slightly larger, we find that charge exchange occurs between the unknown and bromine, implying that its electron affinity is lower than the 3.37 eV of bromine. (All other peaks are suppressed upon addition of bromine, too.)

The observation of two large peaks upon the introduction of bromine gives us two other pieces of information. First, it shows that we can get good mass resolution when observing negative ions. Second, it tells us that, since all halogens have roughly the same electron affinity, if any other halogen atoms were present in the flames, we would see peaks at their masses. This is a useful point to remember when we move to consideration of the higher temperature mass spectrum, where peaks appear near the fluorine and chlorine masses. (The bromine also destroyed our Pt - Pt/Rh gas temperature thermocouple.)

This identification of the mass does not of course imply anything about whether the unknown contains phosphorus, although our negative ion modeling indicated that phosphorus species would predominate at low temperatures. To confirm this prediction, we fed into the flame some K_2HPO_4, and found that indeed the peak at 79 increased, while the other peaks decreased. Though this seems fairly conclusive, the first test is necessary since the addition of a potassium salt could be simply raising the ionization level.

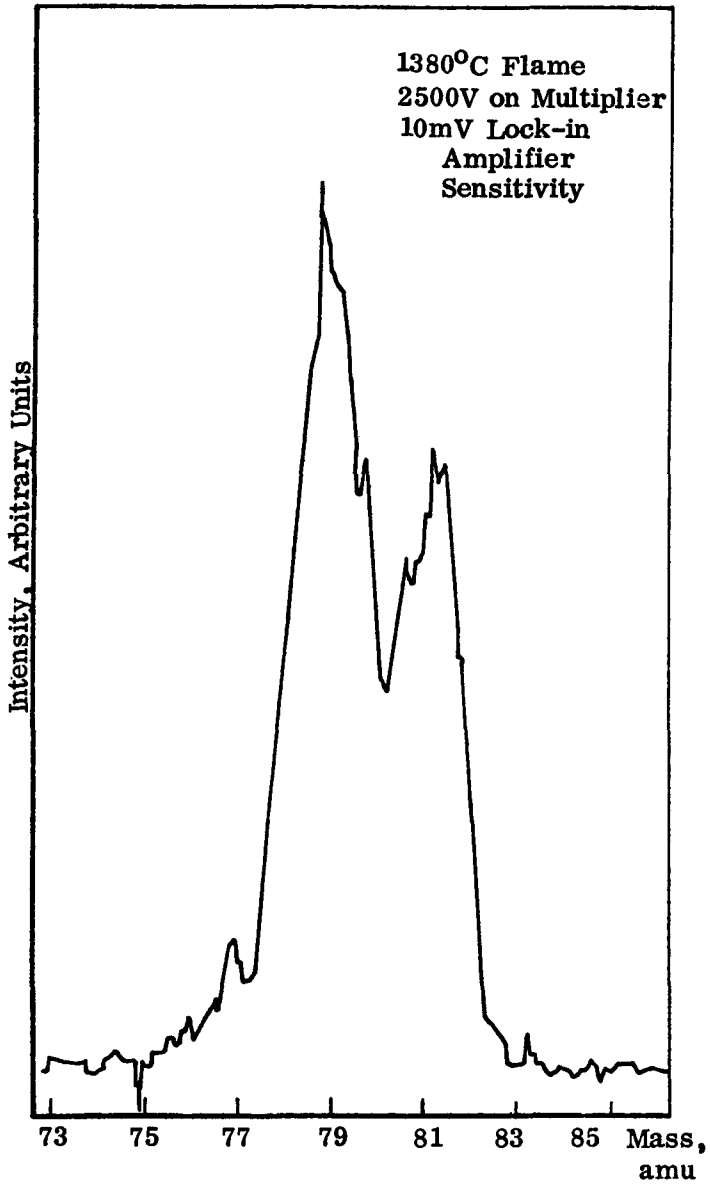

Figure 4.26a Negative Ion Mass Spectrum of Flame With Added CH_3Br.

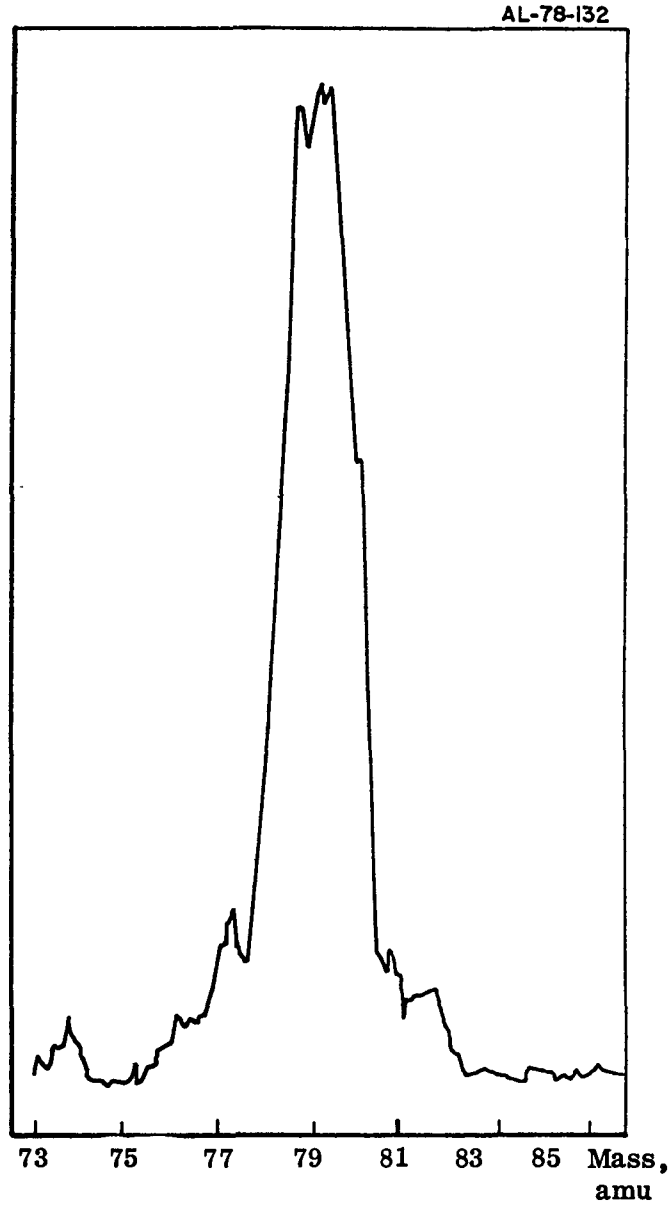

Figure 4.26b Negative Ion Mass Spectrum of Same Seeded Flame [illegible] No Added CH_3Br.

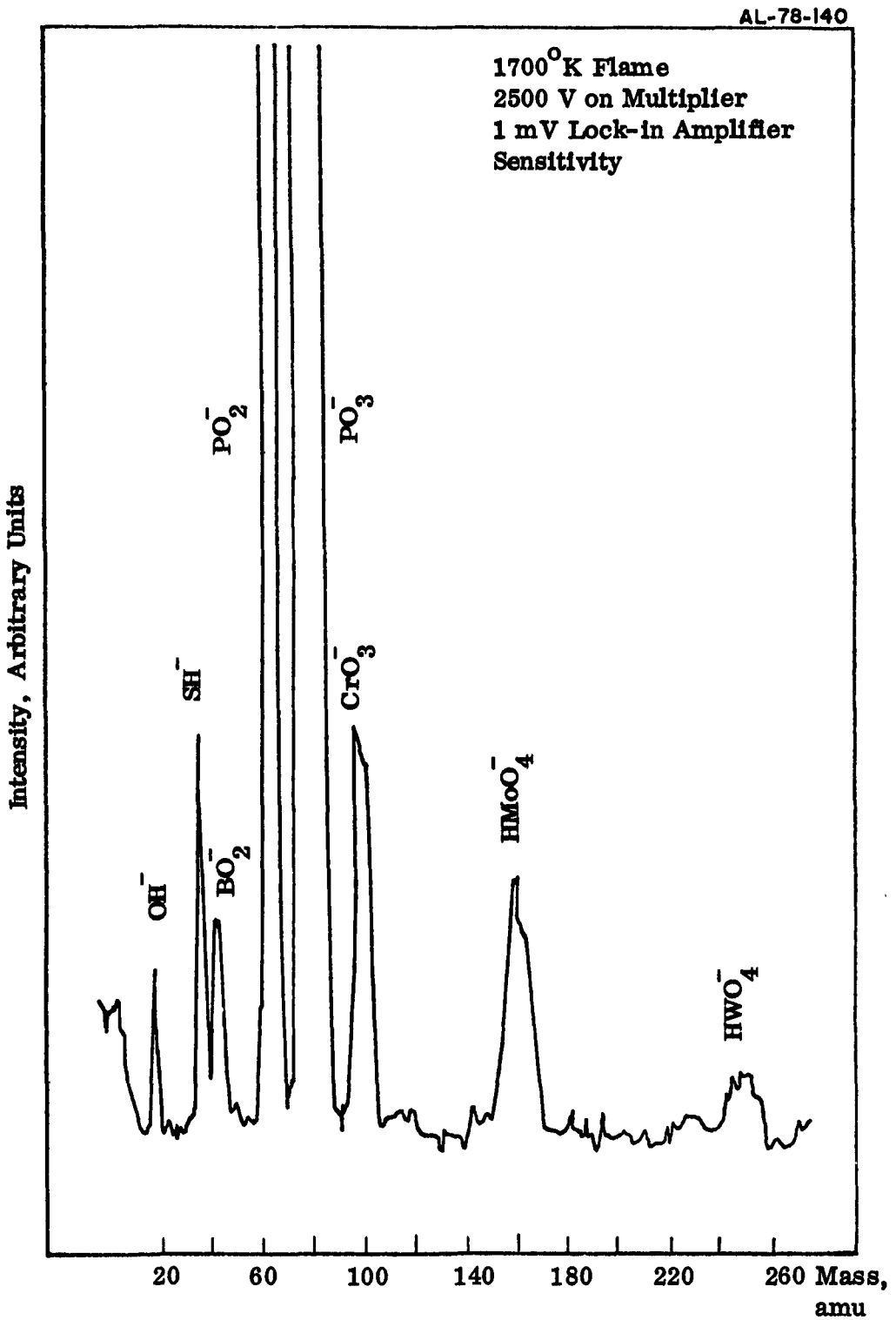

Figure 4.27 Mass Spectrum of Negative Ions Found in a Hotter Methane Flame Seeded by the Slag and Seed Vaporized From the Burner Walls. Preliminary Species Assignments Are Indicated.

The same sorts of tests will have to be carried out before the other peaks can be definitely identified. However, we can now give some discussion of possibilities. The peaks at around 100 and 116 do seem to be separated by close to 16 mass units, suggesting the possibility that they are two oxides differing by one oxygen. However, the requirement of matching a mass number around 100 to a metal oxide turns out to be quite restrictive. One of the few possible metals is chromium, giving rise to CrO_3^-, (mass 100) or $HCrO_3^-$ (mass 101). These ions have indeed been observed in flames seeded with chromium and potassium, and found to have electron affinities of 2.4 and 4.0 eV, respectively [13].

The fact that the higher mass peak around 116 is not seen (or at best is just at noise level) in the higher temperature scan of Figure 4.27 could be taken as an indication that the two peaks are not two oxides of the same metal. However, there is an alternative explanation. The equilibrium concentrations of the various species are found by minimizing the total free energy G. This free energy takes into account not only enthalpies of formation (H), but the entropies of the various molecules (S).

In symbols, to go to a more stable set of concentrations (closer to equilibrium), we wish the change in free energy G to be negative. Since it is given by

$$\Delta G = \Delta H - T\Delta S \quad , \tag{20}$$

we see that since the temperature T is always positive, an increase in the entropy causes the free energy to decrease. However, adding a fourth oxygen to produce CrO_4^-, for instance, decreases entropy (contributes to order). Therefore we would expect that if the trioxide and tetroxide species had equal electron affinities, the concentration of the more complex species would be smaller due to this entropy effect. Furthermore, if we now hold enthalpies and entropies constant for the various species, and increase the temperature, we find that the species with the smaller S has a less negative ΔG for a given ΔT. In other words, at higher temperatures, molecules composed of fewer atoms become more and more favored.

This same argument can be applied to the relationship between PO_2^- and PO_3^-. In the lower temperature scan of Figure 4.25 a peak around 63 mass units, which would correspond to PO_2^-, is barely discernible although our negative ion modeling predicted that its high electron affinity would make it a major species. We see that at the higher temperature of Figure 4.27, this peak has increased considerably, although PO_3^- is still much larger. The peak around 63 has been observed to increase upon addition of powdered K_2HPO_4, giving further weight to the argument that the peaks are PO_2^- and PO_3^-, with PO_3^- having a larger electron affinity. Furthermore, both peaks have been observed to increase with the addition of powdered seeded coal, indicating that the original source of phosphorus in the flame was indeed coal ash. During the set of measurements from which Figure 4.27 was taken, the peak around 100 was observed to increase with the addition of coal, indicating that its original source was also coal ash.

Now we turn to some comments on the possible identities of the other peaks seen in Figure 4.27. The peak around mass 43 should be BO_2^-, which the equilibrium code predicts should become visible at higher temperatures. The code predicts an almost identical concentration and temperature dependence for SO_2^-. With a mass of 64, this could be contributing to the increase in the peak seen in the middle sixties, but it will take higher resolution and seeding studies to distinguish SO_2^- from PO_2^-.

If there is sulfur in the flame, one might also expect to see SH^- or S^-. Indeed we find in Figure 4.27 a peak in the mass range 32 to 35. The possibility of mass 35 must be allowed since the peak could have a contribution from Cl^-. However, judging from our earlier experience with Br^-, we might have expected to have seen Cl^- at lower temperatures. In any case, this question can be resolved fairly easily, since in high resolution Cl^- would be expected to give a peak at mass 37 one-third the size of that at 35.

Next we turn to the peak in the mass range of 17 to 19. The equilibrium computer calculation predicts OH^-, at mass 17, to be at the same or somewhat smaller concentration as BO_2^-, and this seems to be the strongest possibility. Also

possible would be F^- at mass 19, but again the comment about halogens being expected at lower temperatures applies. Both this peak and the one in the middle thirties have not been seen to increase when coal is added.

Finally we come to the peaks at very high mass, beyond those attributed to chromium oxides. If we look directly below chromium in the periodic table we find molybdenum and tungsten, which might be expected to give rise to oxides with high electron affinities. Indeed, these species have also been studied in seeded flames, where it was found that the molecules with the highest electron affinities were $HMoO_4$, with nominal mass 161 (electron affinity 4.25 eV)[14] and HWO_4, around mass 249 (electron affinity 4.35 eV).[15] The agreement with the observed masses is sufficient that these identifications may be considered good possibilities. The apparent greater width of the peaks is consistent with the large number of the peaks of relatively important isotopes possessed both molybdenum and tungsten.

Finally we will investigate the state of quantitative agreement between the experimental observations made so far and the equilibrium calculations made with the present negative ion models. We do this with the realization that modeling the small coal burner, with the difficulty in knowing actual fuel to oxidizer ratios and seed fractions and with problems of incomplete burning and evaporation and of wall and boundary effects, is perhaps more difficult than modeling the core flow of a real MHD generator. With this in mind, we exhibit some calculated concentrations in Table 4-2, for the conditions of 1600 and 1700°K, equivalence ratio (total fuel to oxidizer) of 1.25, and a coal and seed loading corresponding to a feed rate of 85 percent Montana Rosebud coal and 15 percent potassium carbonate of 3 grams per minute, approximately the rate actually used when the coal feed was on. We list all ions which we suspect we have observed. We then list all other negative ions assigned any appreciable concentration by the equilibrium calculation. It is satisfying to note that these unobserved ions are all predicted to have lower concentrations than those identified in the experimental mass spectra. We find that, except for SH^-, this preliminary modeling of negative ions gives the correct concentration ordering.

Table 4-2 Equilbrium Concentrations (Mole Fractions) Calculated for Equivalence Ratio of 1.25 and Coal Feed Rate of 3 Grams Per Minute, for Two Possible Flame Temperatures

Ion	1600°K	1700°K
OH^-	4×10^{-11}	2.5×10^{-10}
F^-	$< 1 \times 10^{-13}$	$< 1 \times 10^{-13}$
S^-	7×10^{-11}	2×10^{-10}
SH^-	3×10^{-8}	5×10^{-8}
Cl^-	9×10^{-12}	4×10^{-11}
BO_2^-	6×10^{-11}	2.5×10^{-10}
PO_2^-	3.5×10^{-10}	7×10^{-10}
SO_2^-	1.5×10^{-10}	6×10^{-10}
S_2^-	1×10^{-10}	1×10^{-10}
PO_3^-	7×10^{-10}	1.5×10^{-9}
CrO_3^-	1.5×10^{-10}	3.5×10^{-10}
$HMoO_4^-$	2×10^{-11}	8×10^{-11}
HWO_4^-	1×10^{-11}	5×10^{-11}
KO^-	3×10^{-13}	7×10^{-12}
FeO_2^-	4×10^{-13}	7×10^{-12}
AlO_2^-	2×10^{-13}	4×10^{-12}
$HCrO_4^-$	$< 1 \times 10^{-13}$	$< 10^{-13}$

The quantitative agreement, comparing the relative observed signal strengths shown in Table 4-3 with the relative concentrations of Table 4-2 is less satisfactory, but this is not surprising considering the limitations of the present modeling. Further measurement and modeling studies are expected to bring data and calculations into quantitative agreement. The model for PO_3^- assumed an electron affinity of 3.4 eV, while that of PO_2^- was changed from our earlier assumption of 3.5 eV to 2.3 eV. We should note that SH^- alone among the observed ions is quite sensitive to the assumed equivalence ratio, since it is essentially a fuel, and therefore, its predicted concentration for our laboratory burner is more in doubt. At an equivalence ratio of 1.0, the mole fraction of SH^- has dropped below 1.0×10^{-13}.

Finally, in Table 4-4 we give a partial analysis of Montana Rosebud coal, listing those elements which have figured in the preceding discussions. The concentrations which are unreferenced are average values taken from our previous survey of the literature of coal analyses [16]. The tungsten number is for North Dakota (Mercer County) lignite, a similar coal to Montana Rosebud subbituminous, since we have no data for Rosebud. It can be seen that the concentrations of chromium, molybdenum, and tungsten, while small, are measurable, and this ash concentration may be offset by the high electron affinities of their oxides.

4.3 Future Work

The observations reported in the previous section immediately suggest more things which should be done. More work is required to positively identify each of the smaller mass peaks. This can be done by a combination of higher resolution scanning, feeding of possible source materials, and introduction of other ions as mass markers. Equally important is the improvement of theoretical models for the ions which we believe we observe, like SH^-, PO_2^-, PO_3^-, CrO_3^-, $HCrO_4^-$, HVO_3^-, $H_2VO_4^-$, $HMoO_4^-$, and HWO_4^-.

Other things which we hope to achieve include a better understanding of the detection electronics, higher flame temperatures, and perhaps a way to avoid plugging the sampling nozzle and have longer coal feeding times. With respect to the first point, although our AC detection scheme for negative ions has worked well in a qualitative

Table 4-3 Negative Ion Peak-to-Peak Chopped Signals in mV as Detected by the Lock-in Amplifier for Several Coal Burner Conditions

Flame Temperature	1650°K	1700°K	1700°K
	Coal Off	Coal Off	Coal On
Mass Peak			
17 - 19		0.25	0.25
33 - 35		0.5	
43		0.25	
63 - 64	0.1	2.5	10
79	15	25	100
100	2.4	0.25	1
116 ± 2	0.8		
160 ± 5		0.1	
250 ± 5		0.05	

Table 4-4 Selected Components of Montana Rosebud Coal

	Percent of Coal	
Ash	10	
Sulfur	1	
	Percent of Ash	
P_2O_5	0.5	
B	0.062	
Cl	0.05	
F	0.086	
Cr	0.002 - 0.015[17]	0.004[18]
Mo	0.002 - 0.010[17]	0.008 - 0.030[19]
W		(0.002)[20]

way, any information about the actual number of negative ions entering the detector is hidden in resistor-capacitor time constants which have not been measured. The best we can do at present is to compare the relative intensities of positive and negative ions detected in the same way. When we do this, we find that under the conditions that the largest negative ion signal, presumably PO_3^-, was 30 mV, the largest positive ion signal, that for potassium, was around 100 mV. Since positive and negative ions must be detected at different times, these numbers may not indeed refer to the same conditions, but the ratio should be correct within a factor of around four. Indeed these sorts of positive to negative ion ratios are just what our modeling efforts lead us to expect. Indeed, the high levels of negative ions indicated by both our measurements and calculations do confirm the major effect their formation will have in depressing plasma conductivity.

Solving the second problem, that of higher temperature, may have to wait until we can redesign the burner to prevent flashback through the grids when oxygen is added to the air. The third, that of sampling nozzle clogging, may be even more difficult. Running the sampling nozzle hot may help, and other groups have developed mechanical devices which periodically clean the nozzle from inside the vacuum chamber. Another problem, presumably related to feeding solid particles which we would like to understand and solve, is the appearance of large random noise pulses whenever coal and seed are in the flame.

4.4 References

(1) E. E. Ferguson, F. C. Fehsenfeld, and A. L. Schmeltekopf, "Flowing Afterglow Measurements," Advances In Atomic And Molecular Physics, Vol. 5, Ed. D. R. Bates and L. Estermann, Academic Press, New York (1969).

(2) F. Kaufman, Private Communication.

(3) W. L. Fite, "Beam Density and Background Pressure Calculations For Two-Stage Modulated Beam Mass Spectrometer," Pinnacle 1 (1), Extranuclear Laboratories, Pittsburgh, Pa. (September 1974).

(4) J. B. Anderson, R. P. Andres, and J. B. Fenn, "High Intensity And High Energy Molecular Beams," Advances In Atomic And Molecular Physics, Vol. I, Academic Press, p. 345, New York (1965).

(5) J. B. French, "Molecular Beams For Rarefied Gasdynamic Research," AGARDograph 112, North Atlantic Treaty Organization, (April 1966).

(6) J. B. Anderson, and J. B. Fenn, "Velocity Distributions In Molecular Beams From Nozzle Sources," Phys. Fluids, 8, 780 (1965).

(7) C. A. Stearns, F. J. Kohl, G. C. Fryburg, and R. J. Miller, "A High Pressure Modulated Molecular Beam Mass Spectrometric Sampling System," NASA Technical Memorandum No. 73720 (July 1977).

(8) W. R. Smythe, Static And Dynamic Electricity, McGraw-Hill, New York (1950).

(9) O. Klemperer, Electron Optics, Cambridge University Press, London, England (1971).

(10) A. B. El-Kareh and J. C. J. El-Kareh, Electron Beams, Lenses, And Optics, Academic Press, New York (1970).

(11) D. L. Hildenbrand and E. Murad, "Dissociation Energy of NaO(g) and the Heat of Atomization of $Na_2O(g)$," J. Chem. Physics, 53, 3403 (1970).

(12) H. M. Rosenstock, K. Draxl, B. W. Steiner, and J. T. Herron, "Energetics Of Gaseous Ions," J. Phys. Chem. Reference Data 6, Supplement No. 1 (1977).

(13) W. J. Miller, "Electron Attachment and Compound Formation in Flames V. Negative Ion Formation in Flames Containing Chromium and Potassium," J. Chem. Phys. 57, 2354 (1972).

(14) D. E. Jensen and W. J. Miller, "Electron Attachment and Compound Formation in Flames.IV. Negative Ion Formation in Flames Containing Potassium and Molybdenum," Thirteenth Symposium on Combustion, The Combustion Institute, Pittsburgh, Pa. p. 363 (1961).

(15) D. E. Jensen and W. J. Miller, "Electron Attachment and Compound Formation in Flames. III. Negative Ion and Compound Formation in Flames Containing Tungsten and Potassium," J. Chem. Phys. 53, 3287 (1970).

(16) C. E. Kolb, V. Yousefian, J. Wormhoudt, M. Martinez-Sanchez, J. L. Kerrebrock, "Characterization Of Open-Cycle Coal-Fired MHD Generators," Report No. ARI-RP-32, Aerodyne Research, Inc., (April 1977).

(17) V. E. Swanson, C. Huffman, and J. C. Hamilton, "Composition and Trace Element Content of Coal, Northern Great Plains Area," U. S. Geological Survey, Denver Col., Northern Great Plains Resource Program, Mineral Resources Work Group Report, U. S. Dept. of Interior Open-File Report, p. 52-83 (February 1974).

(18) P. Zubovic, T. Stadnichenko, and N. B. Sheffey, "Geochemistry of Minor Elements in Coals of the Northern Great Plains Coal Province," U. S. Geo-Geological Survey Bulletin 1117-A (1961).

(19) "Energy Conversion Alternatives Study," Westinghouse Electric Corporation Research Laboratories, Westinghouse Phase I Final Report, NASA CR-134941, Vol. I.

(20) D. N. Baria, "A Survey of Trace Elements in North Dakota Lignite and Effluent Streams from Combustion and Gasification Facilities," The Engineering Station, University of North Dakota (May 1975).

5. PRELIMINARY FULL SCALE MASS SPECTROMETRIC PROBE DESIGN

5.1 Objectives and Milestones

The objective of mass spectrometric measurements in MHD channels will be to determine the concentrations of negative ions and charged colloidal particles (condensed slag).

In view of the difficulty of the technique, it is not reasonable to attempt to build a sampling system which can be inserted into an MHD channel at any location or even at a wide range of locations. Rather, the measurement must be regarded as one which is performed a relatively small number of times to verify and calibrate a theoretical model which is then, in turn, used to assess the effect of negative ions and slag condensation on the MHD generator.

Measurements at the channel entrance (burner outlet) and channel exit, the latter for various channel generating conditions, would seem to satisfy these objectives. The former will provide a test of negative ion predictions in the high temperature region where their concentrations are largest, while the latter will provide measurements of both negative ions and colloids at the low temperature end of the generator where conductivity is most critical.

Our objective, then, is to present a preliminary design for a mass spectrometer which can be attached to the outlet flange of either an MHD burner or an MHD channel so as to withdraw a representative sample without major modifications to the burner or channel and without producing a major upstream effect on the flow. This section contains a discussion of the proposed sampling configuration, pumping requirements, and ion optics considerations pertinent to this task.

5.2 Preliminary Design Details

A brief description of the requirements for mass spectrometric sampling from a dense high enthalpy reactive gas stream were given in the last quarterly report.[1] They will be expanded upon and made more specific here.

The requirement is to sample as accurately as possible the composition of the plasma at a point in the flow channel. This implies carrying the sample into the spectrometer and forming a molecular beam with a minimum of chemical reaction, recombination of ionized species, and spatial separation of the various constituents. For practical reasons it is desired that the final molecular beam be directed at right angles to the flow in the channel so that the instrument can be placed to the side of the MHD flow channel. The steps in sampling, turning and forming the beam will be discussed in turn.

5.2.1 Sampling Configuration

To ensure as clean a sample as possible, it must be drawn from a stagnation point of the MHD channel flow, hence, an upstream-facing stagnation probe is required. Downstream of the sonic sampling orifice the gas cooling by expansion must be fast enough to prevent appreciable modification of the composition. The cooling rate is given by

$$\frac{dT}{dt} \approx u \frac{dT}{dx} \approx u \frac{T}{D}$$

where u is the velocity and D is the nozzle dimension. For representative conditions this yields

$$\frac{1}{T}\frac{dT}{dt} \approx 10^6/D\,(\mathrm{mm}) \quad , \quad \mathrm{sec}^{-1} \qquad \underline{\text{cooling rate}}$$

where as indicated D is in millimeters. Typically threebody neutral recombination chemical rates are less than about 10^{-31} $\mathrm{cm}^6\ \mathrm{s}^{-1}$, so

$$\frac{1}{n}\frac{dn}{dt} \approx 10^{-31}\, n^2$$

for a three body process. Taking n as 1/10 the atmospheric density,

$$\frac{1}{n}\frac{dn}{dt} \approx 10^{5}\ \text{sec}^{-1} \qquad \underline{\text{chemical rate}}$$

Recombination rates for the ionized species are generally controlled by electron/electron/ion processes for which

$$\frac{1}{n_e}\frac{dn_e}{dt} \approx 10^{-9}\, n_e\ (\text{cm}^{-3}) \approx 10^{5}\ \text{sec}^{-1} \qquad \underline{\text{ionization rate}}$$

As pointed out in the last quarterly report,[1] the sampling orifice dimension must be much larger than the Debye length if charged species concentrations are not to be perturbed. This requires

$$\lambda_D = \left(\frac{\epsilon_0 kT}{4\pi e^2 n_e}\right)^{1/2} << D \qquad \underline{\text{charge neutrality}}$$

but typically, for $n_e \approx 10^{13}\ \text{cm}^{-3}$, $\lambda_D \approx 10^{-3}$ mm so this is not a severe limitation.

Finally, if the sampled flow is not to be contaminated by wall effects, the Reynolds number based on orifice diameter should be large. For typical values

$$Re_D \approx 200D\ (\text{mm}) \qquad \underline{\text{viscous effects}}$$

The chemical and ionization rates are most restrictive, both setting an upper limit of about 1 cm for the length of the flow region over which the flow is cooled and expanded sufficiently to terminate these processes.

These considerations lead to the preliminary design shown in Figure 5-1. The sample is drawn from the MHD flow by a 0.5 mm orifice feeding a bent supersonic nozzle which produces a Mach number of about 5 and a pressure of about 2×10^{-2} atm (15 Torr). A sliding wire acts to clear and valve the orifice. This arrangement has been successfully used in other coal flame sampling instruments[2]. The secondary flow passage prevents disruption of the nozzle flow by the cleaning rod passage. A secondary orifice samples the outlet of the nozzle, expanding to about 1 μ pressure, and finally the skimmer forms the molecular beam.

5.2.2 Pumping Requirements

With the two-stage sampling system outlined above, the pumping requirements are modest since the first stage can be handled by a mechanical pump. As indicated on Figure 5-1, a 40 cfm pump should be adequate for a 0.5 mm throat. For the secondary sampling orifice, a 16 inch diffusion pump such as is used in the present ARI mass spectrometer will be adequate, and for the skimmer, a 6 inch diffusion pump will suffice.

5.2.3 Ion Optics Considerations

From experience in sampling neutrals, positive ions and negative ions with the existing ARI mass spectrometer, some requirements for the beam-forming system can be outlined.

When ions are being measured, the skimmer separates the ions desired from those of opposite charge. Thus, if positive ions are to be detected, the skimmer is biased negatively with respect to the sampling orifice so that electrons are drawn out of the plasma at the sampling orifice and the positive ions at the skimmer, either by impinging on its surface or by passing into the beam through the skimmer hole. To ensure that this separation takes place, the potential of the skimmer must be less than that which leads to a space-charge limited beam between sampling nozzle and skimmer. For K^+ ions in the present apparatus, a potential of about -170 volts is required. If negative ions of the same concentration were to be measured, +170 volts would be required.

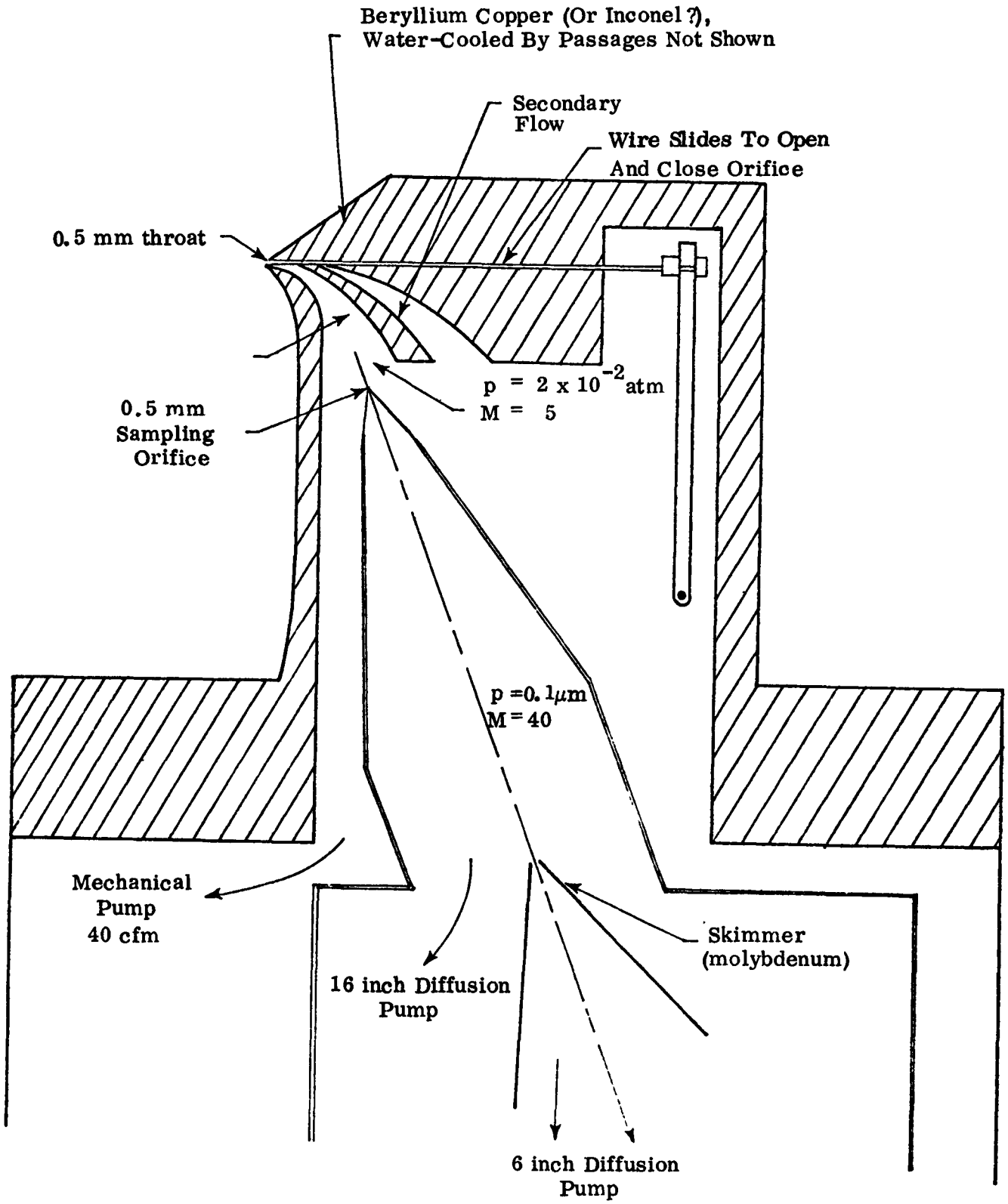

Figure 5.1 Schematic of Sampling System

It has been found by experience that a molybdenum sampling nozzle performs well, while stainless steel, for example, does not. The distrinction has to do with surface conditions but is not understood in any detail.

Beyond the skimmer, conventional ion optics are used, care being taken to see that no grounded surfaces divert the beam, and that there are no space-charge limited points. Because of the complexity of the geometry, empirical tuning of the lenses is required as outlined in Subsection 4.2.3, but once these adjustments are made, they are suitable for all ion masses and charges, with only a sign reversal required for changing from positive to negative ions.

5.3 Future Work

Detailed design of a full scale mass spectrometric sampling system is a major task scheduled for the second phase of our contract effort. Initial efforts will concentrate on solving the nozzle clogging, particle-induced noise, and data acquistion problems identified in our current laboratory program and discussed in Section 4.

5.4 References

(1) C. E. Kolb, V. Yousefian, J. Wormhoudt, M. Martinez-Sanchez, and J. L. Kerrebrock, "Characterization of Open Cycle, Coal-Fired MHD Generators, "Quarterly Technical Summary Report No. 5, Report No. ARI-RP-36, Aerodyne Research, Inc. (October 1977).

(2) T. A. Milne and J. E. Beachey, "The Microstructure of Pulverized Coal-Air Flames. 1. Stabilization on Small Burners and Direct Sampling Techniques," Comb. Sci. and Tech. - to be published.

6. PUBLICATIONS INDEX

The following reports and publications have been prepared during the first phase of the contract:

A. Quarterly Technical Summary Reports,

No.	ARI Report No.	Date
1	ARI-RP-25	October 15, 1973
2	ARI-RP-31	January 15, 1977
3	ARI-RP-32	April 15, 1977
4	ARI-RP-33	July 15, 1977
5	ARI-RP-36	October 15, 1977
6	ARI-RR-116	January 30, 1978

B. Publications

1. M. Martinez-Sanchez, C. E. Kolb, and J. L. Kerrebrock, "Theoretical Analysis of the Effects of Slag Condensation on Plasma Conductivity in Open Cycle, Coal-Fired MHD Generators," Aerodyne Research, Inc., Rpt. No. ARI-RR-106, Published in Proceedings of the Conference on High Temperature Sciences Related to Open Cycle, Coal-Fired MHD Systems, Report No. ANL-77-21, Argonne National Laboratory, pp. 38-42, (April, 1977).
2. M. Martinez-Sanchez, C. E. Kolb, and J. L. Kerrebrock, "Potential Effects of Coal Slag Condensation on Plasma Conductivity in MHD Generators," accepted for publication in the J. of Energy, (Jan. - Feb. 1978), and presented as a post-deadline paper at the 16th Symposium on Engineering Aspects of MHD, Pittsburgh, Pa. (May, 1977), and
3. M. Martinez-Sanchez, V. Yousefian, J. Wormhoudt, C. E. Kolb, and J. L. Kerrebrock, "Computer Modeling of the Effects of Coal Ash Chemistry on the Performance of MHD Generators," accepted for presentation at the 17th Symposium on Engineering Aspects of MHD, Stanford University (March, 1977).

APPENDIX

PRELIMINARY PROGRAM MANUAL

For The

PLASMA ANALYSIS, CHEMICAL KINETICS, AND GENERATOR EFFICIENCY (PACKAGE) CODE

By

V. Yousefian and R. Haimes

January, 1978

A1. INTRODUCTION

In this report, we describe the details of a computer program PACKAGE (Plasma Analysis, Chemical Kinetics, And Generator Efficiency) which has been developed to evaluate the effects of ash derived negative ions on the performance of an open cycle, coal-fired MHD channel. The production of the negative ions and other plasma constituents may be examined under the following chemical conditions:

- Total equilibrium with pure condensed species,
- Total equilbrium with ideal condensed solutions, and
- Partial equilibrium/partial finite rate chemistry.

The last condition has been modeled in anticipation of the presence of kinetic bottlenecks in processes, such as, homogeneous nucleation or ion/molecule reactions, in the colder regions of the channel. The PACKAGE code also may be used to study other MHD plasma chemical effects, including slag induced electron-ion recombination, slag/seed interaction effects, kinetic effects on slag nucleation, pollutant formation rates, and the effects of equivalence ratio, coal rank, and air preheat temperatures on plasma properties and generator efficiencies.

This code, as developed, makes extensive use of the NASA CEC program and, thus, incorporates all of its capabilities including its powerful method of evaluating the composition of the flow mixture under equilibrium chemistry. Moreover, by adding a new routine, called MHD, which evaluates the flow equations under equilibrium and partial equilibrium conditions, and modifying a number of NASA CEC subroutines, PACKAGE can evaluate the composition of the mixture under two additional conditions, which are chemical equilibrium with ideal condensed solution and partial equilibrium/partial finite rate chemistry. Other subroutines added to the program are: CONDUC, which evaluates the conductivity of the flow; DIFSUB, which is a differential equation solution routine, DIFFON, which calculates the flow conservation equations in the MHD core flow environment.

This code is written to take maximum advantage of the NASA CEC program. It uses all of its subroutines except FROZEN, SHCK, and DETON which are eliminated from the code. The structure and the objective of the various CEC routines are well documented in the NASA CEC manual,[1] therefore, no attempt will be made for their description, instead, we recommend that the user have a copy of this document in hand,since numerous references will be made to it.

In the following section, we will describe the MHD core flow model, including the methods of obtaining the mixture composition with ideal condensed solution or with partial equilibrium/partial finite rate chemistry. Section A3 contains the modifications required in the NASA CEC program, while, in Section A4 we outline the structure of the new subroutines. Section A5 contains the references for this appendix and Section A6 describes the PACKAGE input/output procedures. Section A7 contains three sample programs, including output.

The PACKAGE code is available to interested users in the MHD community. Those desiring copies of the code and associated data tapes should forward their request for the code through the DOE MHD Division. A nominal charge for computer tapes and computer time necessary for code reproduction will be imposed for each request.

A2. DESCRIPTION OF MHD CORE FLOW MODEL

The models describing the motion of an ionized fluid are well developed (see for example, Sutton and Sherman[2]) and require no additional effort on our part. The modeling of the flow in the core region of a MHD channel is particularly simple when based on the following assumptions:

- Steady one-dimensional flow,
- Uniformally mixed fluid, and
- Thermal and dynamic equilibrium between gaseous and condensed species.

With these assumptions, the flow conservation equations reduce to ordinary differential equations. The difficulty with solving these equations, however, involves the number of species comprising the fluid mixture. For a coal-fired MHD system, this number can be a few hundred. In Subsections A2.2 - A2.4 we will describe procedures for obtaining the flow composition under three different thermochemical conditions. In the following subsection we will list the conservation equations of the MHD core flow.

A2.1 Conservation Equations

For a one-dimensional steady flow the conservation equations in the core region of an MHD channel can be reduced to:

Mass:

$$\rho u A = \text{const.} \quad ; \tag{1}$$

Species:

$$\rho u \frac{dn_i}{dx} = \dot{w}_i \qquad (i = 1, \ldots, n) \quad ; \tag{2}$$

Momentum along x, the channel axis:

$$\rho u \frac{du}{dx} + \frac{dP}{dx} = J_y B \quad ; \tag{3}$$

Entropy:

$$T \rho u \frac{ds}{dx} = \frac{J^2}{\sigma} - \rho u \sum_{i=1}^{n} \mu_i \frac{dn_i}{dx} \quad , \tag{4}$$

where ρ is density (kg/m^3); u,velocity (m/sec); A,core area (m^2); P,pressure (N/m^2); J_y,the y component of current density (amp/m^2); B,applied magnetic field in z direction (Tesla); n, number of kilogram-moles of species i per kilogram of mixture; $\dot{w}_i$, the rate of production of species i (kg - mole/sec); T, temperature (^{o}K); σ,conductivity (mho/m); μ_i,chemical potential of ith species (joule/kg - mole); n,the total number of species.

In addition to the equations given above, we have the following relations among the flow parameters:

Ohm's Law:

$$J_y = \frac{\sigma}{1+\beta^2} (E_y - uB + \beta E_x) \tag{5}$$

$$J_x = \frac{\sigma}{1+\beta^2} \left[E_x - \beta (E_y - uB)\right] \tag{6}$$

Equations of State:

$$s = \sum_{j=1}^{n} n_j S_j$$

$$S_j = \begin{cases} \left(S_T^0\right)_j - R \ln\left(\frac{n_j}{n}\right) - R \ln p_{atm} & j = 1, \ldots, m \\ \left(S_T^0\right)_j & j = m+1, \ldots, n \end{cases} \tag{7}$$

$$\mu_j = \begin{cases} \mu_j^0 + RT \ln\left(\frac{n_j}{n}\right) + RT \ln p_{atm} & j = 1, \ldots, m \\ \mu_j^0 & j = m+1, \ldots, n \end{cases} , \quad (8)$$

and

$$\frac{P}{\rho} = nRT \quad , \qquad n = \sum_{j=1}^{n} n_j \quad . \quad (9)$$

Here, we have assumed that the first m species are gas phase. In these equations, β is the Hall parameter, E_y and E_x electric field along x and y direction (volts), J_x the x component of current density, S_j^0 standard state entropy (J/kg - mole - ^oK), μ_j standard state chemical potential, P_{atm} the pressure in atmospheres, and R the universal gas constants (J/kg - mole - ^oK). The conductivity σ and Hall parameters β can be evaluated when P, T, and n_j are known. The parameters S_j^0 and μ_j^0 can be determined from Eqs. (91) and (92) on page 32 of the NASA CEC manual.[1] They are part of the NASA CEC's thermodynamic data.

To solve the flow equations uniquely four conditions must be specified. Our main effort in this programming is the modification of the NASA CEC code to determine the MHD core flow with complicated fluid mixtures, therefore, to make the flow equations as simple as possible we selected the following conditions: $E_y/(uB) \equiv K = \text{const.}$, $u = \text{const.}$, $B = \text{const.}$, and $J_x = 0$. With these conditions Eqs. (3), (4), and (5) become:

$$\frac{dP}{dx} = \sigma u B^2 (K-1) \quad , \quad (10)$$

$$T\rho \frac{ds}{dx} = \sigma u B^2 (K-1)^2 + \rho \sum_{j=1}^{n} \mu_j \frac{dn_j}{dx} \quad , \quad (11)$$

and

$$J_y = \sigma u B (K-1) \quad . \quad (12)$$

Here, K is the load factor. While this program is written for these specified conditions, the user can readily extend the use of the program in order to consider other flow conditions. Note that, for convenience, we are using the entropy equation instead of the commonly used energy equation.

Assuming the flow variables are known at the channel entrance, the flow equation can be solved numerically everywhere along the channel. The major difficulty, however, is to determine T and n_j's when s and P are determined under equilibrium and partial equilibrium conditions. The power of the NASA CEC program lies in the fact that it can do just that.

A2.2 Chemical Equilibrium With Pure Condensed Species

This is the chemical condition used by the NASA CEC program to evaluate the mixture composition. In this formulation the species conservation equations are replaced by a set of relations derived from the minimization of the system Gibbs free energy subject to the conservation of the chemical elements. The details of this formulation are given in the NASA CEC manual[1] - it leads to Eqs. (18) - (28) listed on pages 9, 10, and 11 of that document. For a specified pressure and entropy these equations can be solved by an iteration method to determine the mixture temperature and composition. In our model, the entropy and pressure are determined from the solution of the conservation equations. Note that at chemical equilibrium the term $\sum \mu_j \, dn_j = 0$, hence, entropy production is due only to Joule heating.

A2.3 Chemical Equilibrium With Condensed Ideal Solutions

The assumption of pure condensed species in a mixture containing many liquid species as used in the NASA CEC program is often inadequate. Here, we list equations necessary to determine the composition of a mixture at chemical equilibrium containing pure solids, a certain number of pure liquids, and an ideal solution composed of the remaining liquid species. The method of approach for deriving these equations is again the minimization of the Gibbs free energy of the system. In this case, however, the Gibbs free energy of the condensed species in the liquid

solution has a component which depends on the mole fraction of that species in the liquid solution. To be specific let species indexed from $j = 1$ to m be in the gas phase, species indexed from $j = m + 1$ to ns be in the pure condensed phase, and species indexed from $j = ns + 1$ to n be in the liquid solution, then the chemical potential of the species for $j = 1, \ldots, ns$ is given by Eq. (8) while for the remaining species we have:

$$\mu_j = \mu_j^0 + RT \ln \frac{n_j}{n_c} \qquad j = ns + 1, \ldots, n \quad , \tag{13}$$

where

$$n_c \equiv \sum_{j = ns + 1}^{n} n_j \quad ,$$

and μ_j^0 is the standard chemical potential. Correspondingly, the entropy of the jth species in the ideal solution becomes:

$$S_j = S_j^0 - R \ln \frac{n_j}{n_c} \quad . \tag{14}$$

A2.3.1 Gibbs Iteration Equations

Following a procedure similar to the one given in the NASA CEC code for the minimization of the Gibbs free energy and the derivation of Gibbs iteration equations we can derive the following relations to determine the mixture composition and temperature:

$$\Delta \ln n_j - \sum_{j = 1}^{1} a_{ij} \pi_j - \Delta \ln n_g - \frac{\left(H_T^0\right)_j}{RT} \Delta \ln T = - \frac{\mu_j}{RT} \qquad j = 1, \ldots, m \quad , \tag{15}$$

$$\sum_{j = 1}^{1} a_{ij} \pi_j + \frac{\left(H_T^0\right)_j}{RT} \Delta \ln T = \frac{\mu_j}{RT} \qquad j = m + 1, \ldots, ns \quad , \tag{16}$$

$$\Delta \ln n_j - \sum_{j=1}^{l} a_{ij}\pi - \Delta \ln n_c - \frac{(H_T^0)_j}{RT}\Delta \ln T = -\frac{\mu_j}{RT} \qquad j = ns+1, \ldots, n \quad , \tag{17}$$

$$\sum_{j=1}^{m} a_{ij} n_j \Delta \ln n_j + \sum_{j=ns+1}^{n} a_{ij} n_j \Delta \ln n_j + \sum_{j=m+1}^{ns} a_{ij}\Delta n_j = b^0 - b$$

$$= 1, \ldots, l \quad , \tag{18}$$

$$\sum_{j=1}^{m} n_j \Delta \ln n_j - n_g \Delta \ln n_g = n_g - \sum_{j=1}^{m} n_j \quad , \tag{19}$$

$$\sum_{j=ns+1}^{n} n_j \Delta \ln n_j - n_c \Delta \ln n_c = n_c - \sum_{j=ns+1}^{n} n_j \quad , \tag{20}$$

$$\sum_{j=1}^{m} n_j \frac{(H_T^0)_j}{RT}\Delta \ln n_j + \sum_{j=ns+1}^{n} n_j \frac{(H_T^0)_j}{RT}\Delta \ln n_j + \sum_{j=m+1}^{ns} \frac{(H_T^0)_j}{RT}\Delta n_j$$

$$+ \left[\sum_{j=1}^{n} n_j \frac{(C_p^0)_j}{R}\right] \Delta \ln T = \frac{h_0 - h}{RT} \quad , \tag{21}$$

and

$$\sum_{j=1}^{m} \left(\frac{n_j S_j}{R}\right) \Delta \ln n_j + \sum_{j=ns+1}^{n} \left(\frac{n_j S_j}{R}\right) \Delta \ln n_j + \sum_{j=m+1}^{ns} \left[\frac{(S_T^0)_j}{R}\right] \Delta n_j$$

$$+ \left[\sum_{j=1}^{n} \frac{n_j (C_p^0)_j}{R}\right] \Delta \ln T = \frac{s_0 - s}{R} + n_g - \sum_{j=1}^{m} n_j + n_c - \sum_{j=ns+1}^{n} n_j \quad , \tag{22}$$

where n_g is defined as the total number of kilogram-moles of the gaseous species per kilogram of the mixture, i.e.

$$n_g \equiv \sum_{j=1}^{m} n_j \quad . \tag{23}$$

Except for n_c, which is defined below Eq. (13), the remaining symbols in the above equations are identical to those given in the NASA CEC manual, therefore, they will not be redefined here. In the above derivation, the liquid species comprising the solution are treated like the gaseous species. This can be seen from the similarity between Eqs. (15), (17), (19), and (20). Except for Eqs. (17) and (20) the remaining equations are the counterparts of Eqs. (18) - (23) of the NASA CEC code. Note that Eq. (21) is necessary when the mixture enthalpy is specified instead of its entropy. This is the case when calculating the mixture composition in the combustor of an MHD system.

Equations (15) - (20) and (21) or (22) must be solved for the unknowns $\pi_j (i = 1, \ldots, l)$, $\Delta \ln n_j (j = 1, \ldots, m; ns + 1, \ldots, n)$, $\Delta n_j (j = m + 1, \ldots, ns)$, $\Delta \ln n_g$, $\Delta \ln n_c$, and $\Delta \ln T$. The solution procedure used is to estimate $n_j (j = 1, \ldots, n)$, n_g, n_c, and T then to determine the unknowns which (except for π_i) yield correction terms to the initial estimates. Then using the new estimates, the solution technique is repeated until certain convergence criterion is satisfied. For more details, see the topics titled, "Procedure for Obtaining Equilibrium Composition" and "Convergence," on pages 23 and 24 of the NASA CEC manual. Since the convergence tests depend only on the value of the species concentrations and not on the method, they are evaluated and then the relations (76) - (81) of the NASA CEC program are equally valid in our case. Except, the following must be added to the set of Eq. (79)

$$\ln n_j^{(i+1)} = \ln n_j^{(i)} + \lambda^{(i)} (\Delta \ln n_j)^{(i)} \qquad j = ns + 1, \ldots, n \quad , \tag{24}$$

$$\ln n_c^{(i+1)} = \ln n_c^{(i)} + \lambda^{(i)} (\Delta \ln n_c)^{(i)} \quad , \tag{25}$$

and in the third equation, ln n must be replaced by ln n_g; also in the second equation, the upper limit on the i index should be ns instead of n.

A2.3.2 Reduced Gibbs Iteration Equations

By properly combining Eqs. (15) - (22) the total number of equations to be solved can be greatly reduced. With certain algebra, it can be shown that these equations are given by:

$$\sum_{i=1}^{l} \left(\sum_{j=1}^{m} a_{kj} a_{ij} n_j + \sum_{j=ns+1}^{n} a_{kj} a_{ij} n_j \right) \pi_i + \sum_{j=m+1}^{ns} a_{kj} \Delta n_j + \sum_{j=1}^{m} a_{kj} n_j \, \Delta \ln n_g$$

$$+ \sum_{j=ns+1}^{n} a_{kj} n_j \, \Delta \ln n_c + \left[\sum_{j=1}^{m} a_{kj} n_j \frac{(H_T^0)_j}{RT} + \sum_{j=ns+1}^{n} a_{kj} n_j \frac{(H_T^0)_j}{RT} \right] \Delta \ln T$$

$$= b_k^0 - b_k + \sum_{j=1}^{m} a_{kj} n_j \frac{\mu_j}{RT} + \sum_{j=ns+1}^{n} a_{kj} n_j \frac{\mu_j}{RT} \quad (k = 1, \ldots, l) \quad , \qquad (26)$$

$$\sum_{i=1}^{l} a_{ij} \pi_i + \left[\frac{(H_T^0)_j}{RT} \right] \Delta \ln T = \frac{\mu_j}{RT} \quad (j = m+1, \ldots, ns) \quad , \qquad (27)$$

$$\sum_{i=1}^{l} \sum_{j=1}^{m} a_{ij} n_j \pi_i + \left(\sum_{j=1}^{m} n_j - n_g \right) \Delta \ln n_g + \left[\sum_{j=1}^{m} \frac{n_j (H_T^0)_j}{RT} \right] \Delta \ln T$$

$$= n_g - \sum_{j=1}^{m} n_j + \sum_{j=1}^{m} \frac{n_j \mu_j}{RT} \quad , \qquad (28)$$

$$\sum_{i=1}^{l} \sum_{j=ns+1}^{n} a_{ij} n_j \pi_i + \left(\sum_{j=ns+1}^{n} n_j - n_c \right) \Delta \ln n_c + \left[\sum_{j=ns+1}^{n} \frac{n_j \left(H_{T\,j}^0 \right)}{RT} \right] \Delta \ln T$$

$$= n_c - \sum_{j=ns+1}^{n} n_j + \sum_{j=ns+1}^{n} \frac{n_j \mu_j}{RT} \quad , \tag{29}$$

$$\sum_{i=1}^{l} \left[\sum_{j=1}^{m} a_{ij} n_j \frac{\left(H_T^0\right)_j}{RT} + \sum_{j=ns+1}^{n} a_{ij} n_j \frac{\left(H_T^0\right)_j}{RT} \right] \pi_i + \sum_{j=m+1}^{ns} \frac{\left(H_T^0\right)_j}{RT} \Delta n_j$$

$$+ \sum_{j=1}^{m} n_j \frac{\left(H_T^0\right)_j}{RT} \Delta \ln n_g + \sum_{j=ns+1}^{n} n_j \frac{\left(H_T^0\right)_j}{RT} \Delta \ln n_c$$

$$+ \left[\sum_{j=1}^{n} n_j \frac{\left(C_p^0\right)_j}{R} + \sum_{j=1}^{m} n_j \frac{\left(H_T^0\right)_j^2}{R^2 T^2} + \sum_{j=ns+1}^{n} n_j \frac{\left(H_T^0\right)_j^2}{R^2 T^2} \right] \Delta \ln T$$

$$= \frac{h_0 - h}{RT} + \sum_{j=1}^{m} n_j \frac{\mu_i \left(H_T^0\right)_j}{R^2 T^2} + \sum_{j=ns+1}^{n} n_j \frac{\mu_j \left(H_T^0\right)_j}{R^2 T^2} \quad , \tag{30}$$

$$\sum_{i=1}^{1}\left(\sum_{j=1}^{m} a_{ij} n_j \frac{S_j}{R} + \sum_{j=ns+1}^{n} a_{ij} n_j \frac{S_j}{R}\right)\pi_i + \sum_{j=m+1}^{ns} \frac{S_j}{R}\Delta n_j$$

$$+\left(\sum_{j=1}^{m} n_j \frac{S_j}{R}\right)\Delta \ln n_g + \left(\sum_{j=ns+1}^{n} n_j \frac{S_j}{R}\right)\Delta \ln n_c$$

$$+\left[\sum_{j=1}^{n} n_j \frac{\left(C_p^0\right)_j}{R} + \sum_{j=1}^{m} n_j \frac{\left(H_T^0\right)_j}{R^2 T} S_j + \sum_{j=ns+1}^{n} n_j \frac{\left(H_T^0\right)_j}{R^2 T} S_j\right]\Delta \ln T$$

$$= \frac{s_0 - s}{R} + \left(n_g - \sum_{j=1}^{m} n_j\right) + \left(n_c - \sum_{j=ns+1}^{n} n_j\right) + \sum_{j=1}^{m} \frac{n_j S_j \mu_j}{R^2 T} + \sum_{j=ns+1}^{n} \frac{n_j S_j \mu_j}{R^2 T}$$

(31)

These equations are the counterparts of Eq. (24) - (28) listed on pages 10 and 11 of the NASA CEC manual.

A2.3.3 Thermodynamic Derivatives

To evaluate certain thermodynamic variables used to calculate such parameters as the flow Mach number we need to determine certain thermodynamic derivatives (see Eqs. (67) - (75) of the NASA CEC manual). All of these variables can be evaluated if C_p, the mixture specific heat at constant pressure $(\Delta \ln n_g/\Delta \ln T)_P$ and $(\Delta \ln n_g/\Delta \ln P)_T$ are known. Following the procedure and the logic used by the NASA CEC program, to derive Eqs. (56) - (59) and Eqs. (64) - (66) we can show that in the presence of an ideal solution the euqations to be solved are:

$$\frac{C_p}{R} = \sum_{i=1}^{l} \left[\sum_{j=1}^{m} a_{ij} n_j \frac{\left(H_T^0\right)_j}{RT} + \sum_{j=ns+1}^{n} a_{ij} n_j \frac{\left(H_T^0\right)_j}{RT} \right] \left(\frac{\partial \pi_i}{\partial \ln T}\right)_P$$

$$+ \sum_{j=m+1}^{ns} \left[\frac{\left(H_T^0\right)_j}{RT}\right] \left(\frac{\partial \ln n_g}{\partial \ln T}\right)_P + \left[\sum_{j=ns+1}^{m} n_j \frac{\left(H_T^0\right)_j}{RT}\right] \left(\frac{\partial \ln n_c}{\partial \ln T}\right)_P$$

$$+ \sum_{j=1}^{n} n_j \frac{\left(C_P^0\right)_j}{R} + \sum_{j=1}^{m} n_j \frac{\left(H_T^0\right)_j^2}{R^2 T^2} + \sum_{j=ns+1}^{n} n_j \frac{\left(H_T^0\right)_j^2}{R^2 T^2} \quad . \tag{32}$$

And the reduced equations for obtaining derivatives with respect to temperature are:

$$\sum_{i=1}^{l} \left(\sum_{j=1}^{m} a_{kj} a_{ij} n_j + \sum_{j=ns+1}^{n} a_{kj} a_{ij} n_j \right) \left(\frac{\partial \pi_i}{\partial \ln T}\right)_P + \sum_{j=m+1}^{ns} a_{kj} \left(\frac{\partial n_j}{\partial \ln T}\right)_P$$

$$+ \sum_{j=1}^{m} a_{kj} n_j \left(\frac{\partial \ln n_g}{\partial \ln T}\right)_P + \sum_{j=ns+1}^{n} a_{kj} n_j \left(\frac{\partial \ln n_c}{\partial \ln T}\right)_P = - \sum_{j=1}^{m} a_{kj} n_j \frac{\left(H_T^0\right)_j}{RT}$$

$$- \sum_{j=ns+1}^{n} a_{kj} n_j \frac{\left(H_T^0\right)_j}{RT} \qquad k = 1, \ldots, l \quad , \tag{33}$$

$$\sum_{j=1}^{l} a_{ij} \left(\frac{\partial \pi_i}{\partial \ln T}\right)_P = - \frac{\left(H_T^0\right)_j}{RT} \qquad j = m+1, \ldots, ns \quad . \tag{34}$$

$$\sum_{i=1}^{l} \sum_{j=1}^{m} a_{ij} n_j \left(\frac{\partial \pi_i}{\partial \ln T}\right)_P = - \sum_{j=1}^{m} n_j \frac{\left(H_T^0\right)_j}{RT} \quad . \tag{35}$$

$$\sum_{i=1}^{l} \sum_{j=ns+1}^{n} a_{ij} n_j \left(\frac{\partial \pi_i}{\partial \ln T}\right)_P = - \sum_{j=ns+1}^{n} n_j \frac{\left(H_T^0\right)_j}{RT} \quad . \tag{36}$$

The reduced equations for obtaining derivatives with respect to pressure are:

$$\sum_{i=1}^{l} \left(\sum_{j=1}^{m} a_{kj} a_{ij} n_j + \sum_{j=ns+1}^{n} a_{jj} a_{ij} n_j \right) \left(\frac{\partial \pi_i}{\partial \ln P}\right)_T + \sum_{j=m+1}^{ns} a_{kj} \left(\frac{\partial n_j}{\partial \ln P}\right)_T$$

$$+ \sum_{j=1}^{m} a_{kj} n_j \left(\frac{\partial \ln n_g}{\partial \ln P}\right)_T + \sum_{j=ns+1}^{n} a_{kj} n_j \left(\frac{\partial \ln n_c}{\partial \ln P}\right)_T = \sum_{n=1}^{m} \qquad k = 1, \ldots, l \quad . \tag{37}$$

$$\sum_{j=1}^{l} a_{ij} \left(\frac{\partial \pi_i}{\partial \ln P}\right)_T = 0 \qquad j = m+1, \ldots, ns \quad . \tag{38}$$

$$\sum_{j=1}^{l} \sum_{j=1}^{m} a_{ij} n_j \left(\frac{\partial \pi_i}{\partial \ln P}\right)_T = \sum_{j=1}^{m} n_j \quad . \tag{39}$$

$$\sum_{j=1}^{1} \sum_{j=ns+1}^{ns} a_{ij} n_j \left(\frac{\partial \pi_i}{\partial \ln P}\right)_T = 0 \tag{40}$$

These equations together with the following two relations:

$$\left(\frac{\partial \ln V}{\partial \ln P}\right)_T = -1 + \left(\frac{\partial \ln n_g}{\partial \ln P}\right)_T \tag{41}$$

and

$$\left(\frac{\partial \ln V}{\partial \ln T}\right)_P = 1 + \left(\frac{\partial \ln n_g}{\partial \ln T}\right)_P \quad , \tag{42}$$

which are derived from the equation of state are sufficient for obtaining all the required thermodynamic variables which are listed on pages 22 and 23 of the NASA CEC manual.

A2.3.4 Test For Condensed Solution

In the NASA CEC code the vapor pressure test is used for the inclusion of pure condensed phases into the mixture. A similar test can be used to determine if the introduction of condensed solution can lower the free energy of the system. It can be shown that at a given pressure and temperature the formation of ideal solution will lower the free energy of a mixture if the following unequality holds:

$$\sum_{j=ns+1}^{n} \exp\left[\frac{(\mu_j)_g - (\mu_j^0)_c}{RT}\right] > 1 \quad , \tag{43}$$

here, the subscripts (g) and (c) refer to the vapor and condensed phases of the same species. Note that if the solution contains a single species Eq. (45) reduces to Eq. (83) of the NASA CEC manual. As in the NASA CEC program, we let the chemical potential of a species in the vapor phase to be:

$$(\mu_j)_g = RT \sum_{i=1}^{l} \pi_i a_{ij} \quad , \tag{44}$$

with this choice we will encounter no difficulty when the above test is applied to solutions containing liquid species whose vapor phase does not exist.

To account for the fact that at low temperatures some of the species may freeze out of the solution, in this analysis, all those species whose melting temperature is $150^{o}K$ greater than the mixture temperature will be removed from the solution and added to the group of pure condensed species.

A.2.4 Partial Equilibrium/Partial Finite Rate Chemistry

A number of potential kinetic bottlenecks in the plasma's chemical evolution make a theoretical model describing the thermochemistry of a coal fired MHD flow mixture under partial equilibrium chemistry desirable. The formulation of this model is based on the following main assumptions:

- The history of certain species are known to be kinetically controlled;
- The remaining species are at chemical equilibrium.

Under these conditions two different methods are required to evaluate the concentration of the mixture species. To be more specific, we first let all gaseous and condensed species, which are not kinetically controlled, to be indexed from $j = 1$ to $j = me$ and $j = me + 1$ to $j = ne$, repectively; the remaining gaseous and condensed species to be indexed from $j = ne + 1$ to $j = mk$ and $j = mk + 1$ to $j = n$, respectively. With these specifications the conservation equation of species with $j > ne$, the entropy equation, and the equation of state become:

$$\rho u \frac{dn_i}{dx} = \dot{W}_i \qquad i = ne + 1, \ldots, n \quad , \tag{45}$$

$$T \rho \frac{ds}{dx} = \sigma u B^2 (k-1)^2 + \rho \sum_{i=ne+1}^{n} \mu_i \frac{d n_i}{dx} \tag{46}$$

$$\frac{P}{\rho} = RT \left(\sum_{i=1}^{me} n_i + \sum_{i=ne+1}^{mk} n_i \right) \quad . \tag{47}$$

The concentration of species at chemcial equilibrium will be determined by the minimization of the partial Gibbs free energy of the system composed of species indexed from $i = 1$ to $i = ne$ which is:

$$g = \sum_{i=1}^{ne} \mu_i n_i \quad ; \tag{48}$$

g must be minimized subject to the conservation of the chemical elements of the system which is independent of chemical reactions. Following the procedures of the NASA CEC program, we can show that the minimization of the partial Gibbs free energy implies:

$$\frac{\mu_i}{RT} - \sum_{i=1}^{I} \pi_i a_{ij} = 0 \qquad j = 1, \ldots, ne \tag{49}$$

as before π_i are the normalized Lagrange multipliers.

A2.4.1 Gibbs Iteration Equations

For this case, the solution of the conservation equations will yield n_j the concentration of the species with $j > ne$. As in the previous case, however, the temperature and n_j, the concentration of the species with $j \leq ne$, can best be determined by the methods of the NASA CEC program, which is an iteration technique. This procedure can be readily applied to the type of flow considered in this section. We must only remember that the concentration of the kinetically controlled species are known; therfore, in the iteration equations Δn_j and $n_j \; \Delta \ln n_j$ are equal to zero for these species. With this in mind the iteration equations become:

$$\Delta \ln n_j - \frac{N}{N+M} \Delta \ln N - \sum_{i=1}^{1} a_{ij} \pi_i - \left[\frac{\left(H_T^0\right)_j}{RT} \right] \Delta \ln T = 1 \frac{\mu_j}{RT} \qquad j = 1, \ldots, me \tag{50}$$

$$- \sum_{i=1}^{1} a_{ij} \pi_i - \left[\frac{\left(H_T^0\right)_j}{RT} \right] \Delta \ln T = 1 \frac{\mu_j}{RT} \qquad j = me+1, \ldots, ne \tag{51}$$

$$\sum_{j=1}^{me} a_{kj} n_j \Delta \ln n_j + \sum_{j=me+1}^{ne} a_{kj} \Delta n_j = b_k^0 - b_k \qquad k = 1, \ldots, l \tag{52}$$

$$\sum_{j=1}^{me} n_j \Delta \ln n_j - \frac{N}{N+M} \Delta \ln N = N - \sum_{j=1}^{me} n_j \tag{53}$$

$$\sum_{j=1}^{me} \left[nj \frac{\left(H_T^0\right)_j}{RT} \right] \Delta \ln n_j + \sum_{j=me+1}^{ne} \left[\frac{\left(H_T^0\right)_j}{RT} \right] \Delta n_j + \left[\sum_{j=1}^{n} n_j \frac{\left(C_p^0\right)_j}{R} \right] \Delta \ln T$$

$$= \frac{h_0 - h}{RT} \tag{54}$$

$$\sum_{j=1}^{me} \left(n_j \frac{S_j}{R} \right) \Delta \ln n_j + \sum_{j=me+1}^{ne} \left[\frac{\left(S_T^0\right)_j}{R} \right] \Delta n_j + \left[\sum_{j=1}^{n} n_j \frac{\left(C_p^0\right)_j}{R} \right] \Delta \ln T$$

$$= \frac{s_0 - s}{R} + N - \sum_{j=1}^{me} n_j \tag{55}$$

These equations are the counterparts of the Eqs. (18) through (23) of the NASA CEC manual. The symbols N and M are defined as follows.

$$N = \sum_{i=1}^{me} n_j$$

and

$$M = \sum_{i=ne+1}^{mk} n_j \quad , \tag{56}$$

hence n, the number of kilogram moles of gaseous species in the mixture per kilogram of the mixture, is the sum of n and M. Since M is known, we have $\Delta \ln n = N \Delta \ln N/(N + M)$. Note that the parameters b_k, s, and h depend on all the n_j's and T, hence, part of b_k that is summed over species indexed from $j = ne + 1$ to $j = n$ is known.

A2.4.2 Reduced Gibbs Iteration Equation

As in the previous section, the number of equations to be solved can be greatly reduced by the proper combination of Eq. (50). With some algebra, it can be shown that the reduced equations are given by:

$$\sum_{i=1}^{l} \sum_{j=1}^{me} a_{kj} a_{ij} n_j \pi_i + \sum_{j=me+1}^{ne} a_{kj} \Delta n_j + \frac{N}{N+M} \sum_{j=1}^{me} a_{kj} n_j \Delta \ln N$$

$$+ \left[\sum_{j=1}^{me} a_{kj} n_j \frac{\left(H_T^0\right)_j}{RT} \right] \Delta \ln T = b_k^0 - b_k + \sum_{j=1}^{me} \frac{a_{kj} n_j \mu_j}{RT} \qquad k = 1, \ldots, l \ . \tag{57}$$

$$\sum_{i=1}^{l} a_{ij}\,\pi_i + \left[\frac{(H_T^0)_j}{RT}\right]\Delta \ln T = \frac{\mu_j}{RT} \qquad j = me+1, \ldots, ne \tag{58}$$

$$\sum_{i=1}^{l}\sum_{j=1}^{me} a_{ij}n_j\,\pi_i + \left(\frac{N}{N+M}\sum_{j=1}^{me} n_j - N\right)\Delta \ln N + \left[\sum_{j=1}^{me} n_j \frac{(H_T^0)_j}{RT}\right]\Delta \ln T$$

$$= N - \sum_{j=1}^{me} n_j + \sum_{j=1}^{me} \frac{n_j\,\mu_j}{RT} \tag{59}$$

$$\sum_{i=1}^{l}\left[\sum_{j=1}^{me} a_{ij}n_j \frac{(H_T^0)_j}{RT}\right]\pi_i + \sum_{j=me+1}^{ne}\left[\frac{(H_T^0)_j}{RT}\right]\Delta n_j$$

$$+\left[\sum_{j=1}^{me} n_j \frac{(H_T^0)_j}{RT}\right]\left(\frac{N}{N+M}\right)\Delta \ln N + \left[\sum_{j=1}^{me} n_j \frac{(H_T^0)_j}{R^2T^2} + \sum_{j=1}^{n} n_j \frac{(C_p^0)_j}{R}\right]\Delta \ln T$$

$$= \frac{h_0 - h}{RT} + \sum_{j=1}^{me} n_j \frac{(H_T^0)_j\,\mu_j}{R^2T^2} \tag{60}$$

$$\sum_{i=1}^{l}\left(\sum_{j=1}^{me}\frac{a_{ij}n_jS_j}{R}\right)\pi_i + \sum_{j=me+1}^{ne}\left(\frac{S_j}{R}\right)\Delta n_j + \left(\sum_{j=1}^{me}\frac{n_jS_j}{R}\right)\frac{N}{N+m}\Delta \ln N$$

$$+\left[\sum_{j=1}^{n} n_j\frac{(C_p^0)_j}{R} + \sum_{j=1}^{me} n_jS_j\frac{(H_T^0)_j}{R^2T}\right]\Delta \ln T = \frac{s_0-s}{R} + N - \sum_{j=1}^{me} n_j$$

$$+\sum_{j=1}^{me}\frac{n_jS_j\mu_j}{R^2T} \tag{61}$$

which are the counterparts of Eqs. (24) through (28) of the NASA CEC manual. The procedure for obtaining the partial equilibrium composition and the convergence tests are identical to those given in the NASA CEC manual. In this version of our model, condensed solutions are not included in the partial equilibrium flow calculation, hence, tests for condensed species not controlled by finite rate chemistry are the same as those of the NASA CEC program.

A2.4.5 Thermodynamic Derivatives

In a fluid mixture with nonequilibrium chemistry, the independent thermodynamic variables also include the concentration of the kinetically controlled species. Therefore, when evaluating thermodynamic variables like the specific heats, which are derivatives with respect to temperature alone, we must remember to keep the concentrations of the kinetically controlled species constant during the differentiation. To be more precise, let $\overline{M}$ represent all species n_j with $j > ne$ and let

$$\left(\frac{\partial}{\partial \xi}\right)_{\eta,\ \overline{M}}$$

to mean differential with respect to ξ while keeping n and all n_j ($j > ne$) constant. Here, ξ and y are assumed independent thermodynamic variables other than n_j ($j > ne$). With this representation all derivatives given by Eqs. (67) through (75) of the NASA CEC manual will be equally valid in a flow with partial equilibrium chemistry or they are put in a form similar to the above equation.

As in the previous subsection, the only parameters required for our calculations are e_p, $\overline{M}$ and $(\partial \ln N/\partial \ln T)$, s, M and $(\partial \ln N/\partial \ln P)T$, M. Following the procedure and reasoning used by the NASA CEC manual for the derivation of Eqs (56) through (59) and Eqs. (64) through (66) listed in that code by keeping n_j constant for $j < ne$, we can derive the following relations to determine these parameters:

$$\frac{C_{p,\overline{M}}}{R} = \sum_{i=1}^{l}\left[\sum_{j=1}^{me} a_{ij}n_j \frac{(H_T^0)_j}{RT}\right]\left(\frac{\partial \pi_i}{\partial \ln T}\right)_{P,\overline{M}} + \sum_{j=me+1}^{ne}$$

$$\times\left[\frac{(H_T^0)_j}{RT}\right]\left(\frac{\partial n_j}{\partial \ln T}\right)_{P,\overline{M}} + \left[\sum_{j=1}^{me} n_j \frac{(H_T^0)_j}{RT}\right]\frac{N}{N+M}\left(\frac{\partial \ln N}{\partial \ln T}\right)_{P,\overline{M}}$$

$$+ \sum_{j=1}^{n} n_j \frac{(C_p^0)_j}{R} + \sum_{j=1}^{me} n_j \frac{(H_T^0)_j^2}{R^2T^2} \quad . \tag{62}$$

Reduced equations for getting derivatives with respect to temperature

$$\sum_{i=1}^{l}\sum_{j=1}^{me} a_{kj}a_{ij}n_j\left(\frac{\partial \pi_i}{\partial \ln T}\right)_{P,\overline{M}} + \sum_{j=me+1}^{ne} a_{kj}\left(\frac{\partial n_j}{\partial \ln T}\right)_{P,\overline{M}} + \frac{N}{N+M}$$

$$\times \sum_{j=1}^{me} a_{kj}n_j\left(\frac{\partial \ln N}{\partial \ln T}\right)_{P,\overline{M}} = -\sum_{j=1}^{me} a_{kj}n_j \frac{(H_T^0)_j}{RT} \quad k = 1, \ldots, \rho \tag{63}$$

$$\sum_{i=1}^{l} a_{ij} \left(\frac{\partial \pi_i}{\partial \ln T}\right)_{P,\overline{M}} = - \frac{(H_T^0)_j}{RT} \qquad j = me+1, \ldots, ne \tag{64}$$

$$\sum_{i=1}^{l} \sum_{j=1}^{me} a_{ij} n_j \left(\frac{\partial \pi_i}{\partial \ln T}\right)_{P,\overline{M}} - \left(\frac{NM}{N+M}\right)\left(\frac{\partial \ln N}{\partial \ln T}\right)_{P,\overline{M}} = - \sum_{j=1}^{me} n_j \frac{(H_T^0)_j}{RT} \tag{65}$$

Reduced equations for getting derivatives with respect to pressure.

$$\sum_{i=1}^{l} \sum_{j=1}^{me} a_{kj} a_{ij} n_j \left(\frac{\partial \pi_i}{\partial \ln P}\right)_{T,\overline{M}} + \sum_{j=me+1}^{ne} a_{kj} \left(\frac{\partial n_j}{\partial \ln P}\right)_{T,\overline{M}}$$

$$+ \frac{N}{N+M} \left(\frac{\partial \ln N}{\partial \ln P}\right)_{T,\overline{M}} \sum_{j=1}^{me} a_{kj} n_j = \sum_{j=1}^{me} a_{kj} n_j \qquad k = 1, \ldots, l \tag{66}$$

$$\sum_{i=1}^{l} a_{ij} \left(\frac{\partial \pi_i}{\partial \ln P}\right)_{T,\overline{M}} = 0 \qquad j = me+1, \ldots, ne \tag{67}$$

$$\sum_{i=1}^{l} \sum_{j=1}^{me} a_{ij} n_j \left(\frac{\partial \pi_i}{\partial \ln P}\right)_{T,\overline{M}} - \frac{NM}{N+M} \left(\frac{\partial \ln N}{\partial \ln P}\right)_{T,\overline{M}} = \sum_{j=1}^{me} n_j \tag{68}$$

These equations together with the following two equations

$$\left(\frac{\partial \ln V}{\partial \ln P}\right)_{T,\overline{M}} = -1 + \frac{N}{N+M}\left(\frac{\partial \ln N}{\partial \ln P}\right)_{T,\overline{M}} \tag{69}$$

$$\left(\frac{\partial \ln V}{\partial \ln T}\right)_{P,\overline{M}} = 1 + \frac{N}{N+M}\left(\frac{\partial \ln N}{\partial \ln T}\right)_{P,\overline{M}} \tag{70}$$

which are derived from the equation-of-state are sufficient for obtaining all the required thermodynamic variables (listed on pages 22 and 23 of the NASA CEC manual). Note that with $M = 0$, the above equations reduce to their corresponding forms listed in the NASA CEC code.

This concludes the formulation of the flow models considered in our analysis. In the next sections we will outline the required programming.

A3. COMPUTER PROGRAM - PACKAGE

The PACKAGE computer program is written in standard FORTRAN IV. It is designed to run on any operating system that will accommodate the program's large size. At Aerodyne Research, Inc., PACKAGE has been run on a CDC 6600 and a PRIME 400.

Due to the accuracy required in some calculations, DOUBLE PRECISION statements are necessary for some variables on 32 bit machines (such as the PRIME 400 or on the IBM 360/370 computer). These statements can be commented out on machines with larger words like the CDC 6600.

PACKAGE requires thermodynamic data (associated with FORTRAN LOGICAL UNIT 7) for many of its calculations. This data is taken from the JANAF tables[3] or may be produced by the means of the PAC program,[4] providing suitable thermochemical and spectroscopic data is available for the species of interest.

At progrm load, there will be one external reference left unresolved (PERDEV). This routine is called from DIFSUB when partial derivatives are supplied during integration.

A.3.1 Program Structure

Basically, PACKAGE is a modification of the NASA CEC program. These modifications generalized the NASA code and made it applicable to MHD flow environments as well as to rocket combustor and exhaust calculations.

There are three types of changes that were made to the NASA CEC program.

(1) Deletion of specialized subroutines such as SHCK, DETON and FROZEN,

(2) Addition of new subroutines which include MHD, CONDCIC, DIFSUB, and DIFFUN,

(3) Modification of existing code.

A basic flow diagram of PACKAGE can be seen in Figure A 3-1.

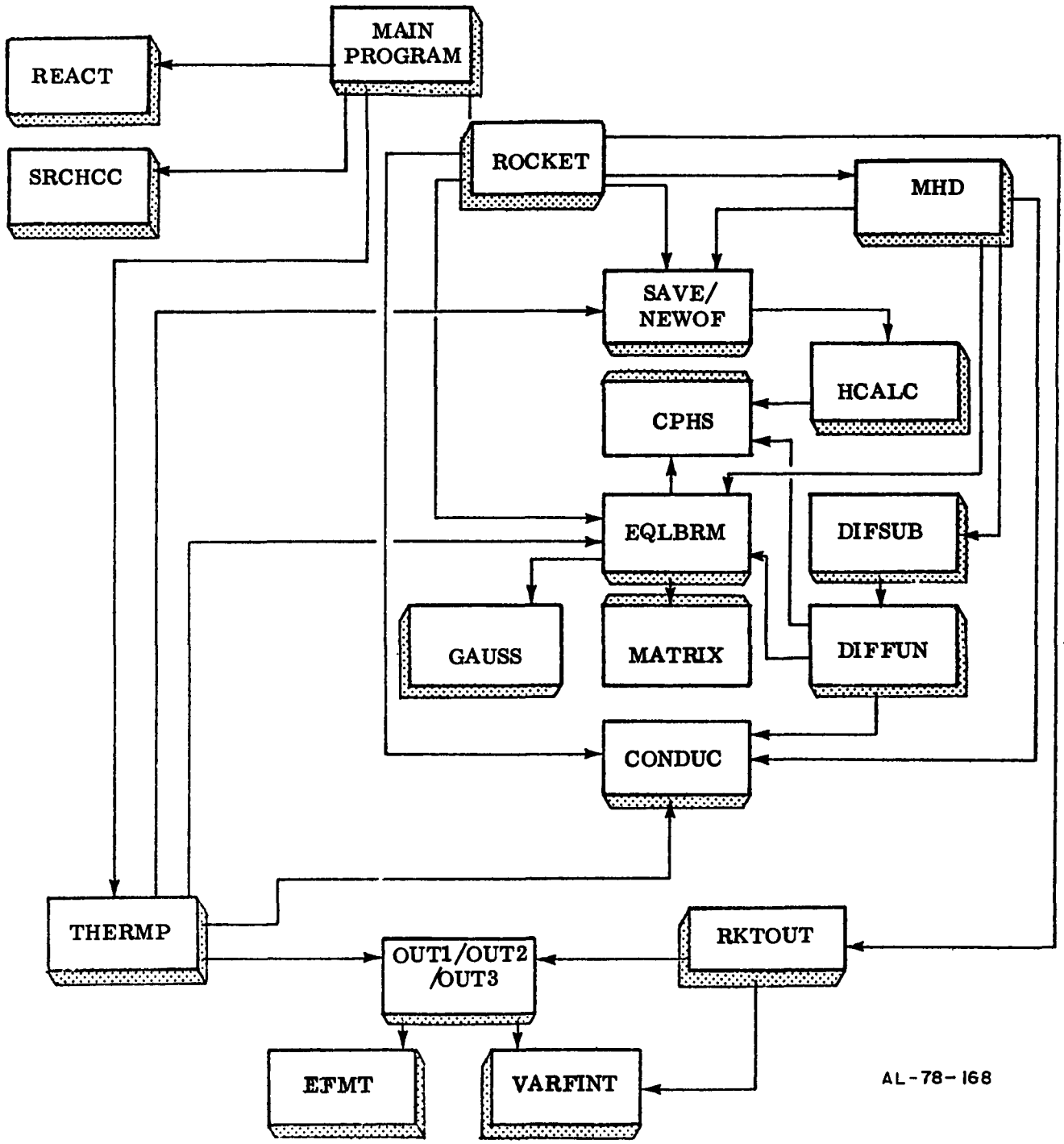

Fig. A3-1 Subroutine Flow Diagram For PACKAGE.

Due to the many differences that exist between the NASA CEC chemical model and the model development in the previous section, extensive changes were required in many subroutines. Since it is not practical to give a complete listing of all of the changes, the major modification in these subroutines will be listed in the following subsections.

A complete description of the new subroutines is presented in Section A4.

A.3.2 Modifications To The MAIN Program

The MAIN program controls the flow of the program that is dependent on the input. The changes were:

- Read SOLUTION card input,
- Set up the indices for the processing of ideal condensed solutions.

A.3.3 Modifications To ROCKET

The subroutine, ROCKET, evaluates the equilibrium composition of rocket chamber combustion products and the equilibrium composition of isentropically expanding combustion products for specified pressure or area ratios.

Since models describing the flow in the upstream region of an MHD channel are identical to that of a rocket with a converging-diverging nozzle, ROCKET can also be used to evaluate the combustion product properties of the MHD combustor and the channel entrance under both subsonic and supersonic conditions.

Changes include:

- Control the program to evaluate the combustion properties beyond the channel entrance. This is performed by calls to subroutine MHD.
- Output the finite rate reactions and species for NEQL = T problems before the first call to RKTOUT.

A.3.4 Modifications To EQLBRM

EQLBRM calculates equilibrium compositions and thermodynamic properties for a particular point. Changes are:

- Modification to the basic equations in accordance with Subsection A.2.3 (to handle ideal solutions),
- Add the decision process for the inclusion of the solution, Subsection A.2.3.4,
- Freezing out of individual species in solution.

A.3.5 Modifications To MATRIX

MATRIX sets up, and with the aid of GAUSS, solves for the equilibrium compositions. The changes involve additional code to handle the equilibrium composition for the ideal condensed solution and partial equilibrium/partial finite rate chemistry.

A.4 PACKAGE SUBROUTINES

The subroutines in this section are new routines added to the NASA CEC program. This novel code evaluates equilibrium and finite rate conditions and compositions for combustion properties beyond the channel entrance.

A.4.1 Subroutine MHD

MHD has two functions. The first is initializing the equations that solve the finite rate chemistry option and the equations that determine pressure and entropy in the channel. The second function is that MHD calls a routine DIFSUB to solve these differential equations.

During initialization, if NEQL = TRUE, the REACTION RATE cards are input and stored. This input defines the finite rate equations and also which species should be removed from the equilibrium calculations. Regardless of the state of NEQL, the pressure and entropy equations are initialized with the values of the channel entrance. Other integration parameters are also initialized before the first call to DIFSUB. This initialization is only performed the first time MHD is called.

Solving the differential equations, set up by the first portion of MHD, is performed by repetitive calls to Subroutine DIFSUB. This is the function of the second portion of MHD. DIFSUB is called until the independent variable (distance) is beyond the report interval as defined by DXI of name list INPT2. MHD then recalculates the conditions and compositions at the report stations. This is performed by additional calls to EQLBRM and CONDUC. Control is then returned to ROCKET, where these values are stored for output by RKTOUT.

A.4.2 Subroutine DIFSUB

DIFSUB is a routine that solves systems of ordinary differential equations. This multistep, multiorder technique was written by Gear.[5] DIFSUB has one major advantage over other numerical methods, which solve initial value - ordinary

differential equations, it can handle "stiff" systems. A "stiff" system to any system of ordinary differential equations that has vastly different time constants. Most chemically reacting systems are "stiff".

DIFSUB has been modified from Gear's original code by the addition of a Gaussian elimination section, instead of a strict matrix inversion. This speeds up execution of larger systems.

DIFSUB calls the Subroutine DIFFUN which evaluates the derivatives of the equations.

Two name list INPT2 values are used by DIFSUB. ACCURC is the relative accuracy that each equation result is resolved. If for one step, the truncation error is greater than ACCURC, then the integration step size is reduced. If the truncation error is much less, then the step size is increased. HMIN is the minimum step size allowed by the integration technique before the method aborts.

A.4.3 Subroutine DIFFUN

DIFFUN, given the values for the equations at a specified independent variable (distance), returns the rates for the differential equations. DIFSUB uses the rates to solve the differential equations.

For finite rate problems, the rate of change for a particular nonequilibrium species is calculated on this routine. EQLBRM and CONDUC are also called to get the proper conditions for these computations.

The rates of change of pressure and entropy are calculated regardless of the state of NEQL.

A.4.4 Subroutine CONDUC

CONDUC was written by Dr. Howard Cohen of the M.I.T. Energy Laboratory. It calculates the conductivity of open cycle MHD generators without slag, using the Demetriades and Argyropoulos algorithm.[6] Cross sections, based on the compilations of Spencer,[7,8] are tabulated for temperatures from 1700 to 3000°K; outside this range, an extrapolation is used.

A5. REFERENCES

(1) S. Gordon and B.J. McBride, "Computer Program for Calculation of Complex Chemical Equilibrium Compositions, Rocket Performance, Incident and Reflected Shocks, and Chapman-Jouquet Detonations," Report No. NASA SP-2731, National Aeronautics and Space Administration, Washington, DC (1971).

(2) G.W. Sutton and A. Sherman, Engineering Magnetohydrodynamics, McGraw-Hill, New York (1965).

(3) M.W. Chase, Jr., et al., JANAF Thermochemical Tables, Dow Chemical Co., Midland, Michigan, Revised Version (June 30, 1977).

(4) B.J. McBride and S. Gordon, "FORTRAN IV Program for Calculation of Thermodynamic Data," Report No. NASA TN D-4097, National Aeronautics and Space Administration, Washington, DC (August 1967).

(5) C.W. Gear, Numerical Initial Value Problems in Ordinary Differential Equations, Prentice-Hall, Englewood Cliffs, N.J. (1971).

(6) S.T. Demetriades and G.S. Argyropoulos, Phys. Fluids, 9, 2136 (1966).

(7) F.E. Spencer and A.V. Phelps, "Momentum Tranfer Cross Sections and Conductivity Integrals for Gases of MHD Interest," Proc. of the Fifteenth Sympsoium on Engineering Aspects of MHD, Philadelphia, Penn. Paper IX, 9, (1976).

(8) F.E. Spencer, et al., in "Research in Coal-Based MHD," Monthly Technical Progress Report, Pittsburgh Energy Research Center (1976).

A. 6 INPUT AND OUTPUT FORMATS

Since the PACKAGE code is structured around the preexisting NASA CEC program, its input and output characteristics are quite similar. The following descriptions of the PACKAGE input and output formats are adapted from similar discussions found in the NASA CEC program manual[1].

A. 6.1 Description of Program Input

Program input data will be discussed under four categories. Three of the categories are required and one is optional. The three required categories and the code names by which they will be referred are as follows:

(a) Library of thermodynamic data for reaction products (THERMO data)

(b) Data pertaining to reactants (REACTANTS cards)

(c) Namelist data which include the type of problem, required schedules, and options (NAMELISTS input).

The optional category of data are chemical formulas of species which are singled out for special purposes (OMIT , SOLUTION and INSERT are control codes used by the program to identify the input read from data cards. The THERMO, REACTANTS, and NAMELISTS codes are punched on separate cards, each preceding their appropriate data cards. The OMIT, SOLUTION and INSERT codes are on the same card as the data.

The required order of the data cards is as follows:

(1) THERMO code card,

(2) THERMO data (these cards and the preceding THERMO code card may be omitted if the thermodynamic data, data are to be read from tape)

(3) REACTANTS code card,

(4) REACTANTS cards,

(5) OMIT, SOLUTION and INSERT cards (if any),

(6) NAMELISTS code card,

(7) NAMELISTS data,

(8) REACTION RATE cards (if any).

In a particular run, there may be any number of sets of REACTANTS cards (Items 3 and 4), each followed by any number of sets of OMIT, SOLUTION and INSERT cards (Item 5) and NAMELISTS input (Items 6 and 7).

The program contains two namelists for input: INPT2 and RKTINP.

Examples of input cards for several typical problems are given in Section A7.

A.6.2 THERMO Data

The library of thermodynamic data for reaction products are required in the JANAF table form.

THERMO data may be read either from cards or from file. If the data are read in from cards, the program will write these data on FORTRAN LOGICAL Unit 7. During a computer run, the appropriate reaction product data consistent with each new set of REACTANTS cards will be automatically selected from FORTRAN LOGICAL unit 7 and stored in memory.

Data for one or more species may be omitted from consideration during any particular run (without removing the data from the file) by using OMIT cards (see OMIT section).

A.6.3 REACTANTS Cards

This set of cards is required. The first card in the set contains the word REACTANTS punched in card columns 1 to 9. The last card in the set is blank. In between the first and last cards may be any number of cards up to a maximum of 15, one for each reactant species being considered. The cards for each reactant must give the chemical formula and the relative amount of the reactant. The format and contents of the cards are summarized in Table A6-1.

Table A6-1 - REACTANTS Cards

Order	Contents	Format	Card Columns
First	REACTANTS		
Any	One card for each reactant species (maximum 15). Each card contains:	3A4	1 to 9
	(1) Atomic symbols and formula numbers (maximum 5 sets)[a]	5(A2. F7. 5)	1 to 45
	(2) Relative weight[b] or number of moles	F7. 5	46 to 52
	(3) Blank if (2) is relative weight or M if (2) is number of moles	A1	53
	(4) Enthalpy or internal energy[a]. cal mole	F9. 5	54 to 62
	(5) State: S, L, or G for solid, liquid or gas, respectively	A1	63
	(6) Temperature associated with enthalpy in (4)	F8. 5	64 to 71
	(7) F if fuel or O if oxidant	A1	72
	(8) Density in g cm^3 (optional)	F8. 5	73 to 80
Last	Blank		

[a] Program will calculate the enthalpy or internal energy (4) for species in the THERMO data at the temperature (6) if zeros are punched in card columns 37 and 38. (See section Reactant enthalpy for additional information.)

[b] Relative weight of fuel in total fuels or oxidant in total oxidants. All reactants must be given either all in relative weights or all in number of moles.

Relative Amounts of Reactants - The relative amounts of reactants may be specified in several ways. They may be specified in terms of moles, mole fraction, or mole percent (by keypunching M in card column 53).

For these cases, the relative amounts of the reactants are completely specified by the values on the REACTANTS cards. However, there are optional variables which may be set in namelist INPT2 that indicate relative amounts of total fuel to total oxidants. For this situation, each reactant must be specified as a fuel or an oxidizer by keypunching an F or O, respectively, in column 72 of the REACTANTS card. The amounts given on the REACTANTS cards are relative to total fuel or total oxidant rather than total reactant.

There are four options in INPT2 for indicating relative amounts of total fuel to total oxidant. They include:

(1) Equivalence ratio (RATIO is true),

(2) Oxidant to fuel weight ratio (OF is true),

(3) Fuel percent by weight (FPCT is true),

(4) Fuel to air or fuel to oxidant weight ratio (FA is true).

For each option, the values are given in the MIX array of INPT2 (described in NAMELISTS Input section).

The purpose of the previous namelist variables is to permit using one set of reactant cards with any number of values (up to 15), of the variables such as oxidant to fuel ratio (OF = T).

Reactant enthalpy - Assigned enthalpy values for initial conditions are required. The values for the individual reactants are either keypunched on the REACTANTS cards or calculated from the THERMO data.

Enthalpies or internal energies are taken from the REACTANTS cards unless zeros are punched in card columns 37 and 38. For each REACTANTS card with the ''00'' code, an enthalpy will be calculated for the species from the THERMO data for the temperature given in card columns 64 to 71.

When the program is calculating the individual reactant enthalpy or internal energy values from the THERMO data, the following two conditions are required:

(1) The reactant must also be one of the species in the set of THERMO data. For example, $NH_3(g)$ is in the set of THERMO data but $NH_3(l)$ is not. Therefore, if $NH_3(g)$ is used as a reactant its enthalpy could be calculated automatically, but that of $NH_3(l)$ could not be.

(2) The temperature T must be in the range $T_{low}/1.2 \leq T \leq T_{high} \times 1.2$ where T_{low} to T_{high} is the temperature range of the THERMO data.

A.6.4 NAMELISTS Input

The NAMELISTS code card precedes the NAMELISTS input.

The variables in each namelist are listed in Tables A6-2 and A6-3. Some additional information about some of these variables follows:

Pressure Units. - The program assumes the pressure in the P schedule to be in units of atmospheres unless either PSIA = T, NSQM = T, or MMHG = T.

Relative Amounts of Fuel(s) and Oxidizer(s). - These quantities may be specified by assigning 1 to 15 values for either o/f, %F, f/a, or r. If no value is assigned for any of these, the program assumes the relative amounts of fuel(s) and oxidizer(s) to be those specified on the REACTANTS cards. (See discussion in REACTANTS Cards section.)

Printing Mole Fractions of Trace Species. - The program automatically prints compositions of species with mole fractions $>5 \times 10^{-6}$ in F-format. The TRACE option permits printing smaller mole fractions. If the variable TRACE is set to some positive value, mole fractions greater than or equal to this value will be printed. When this option is used, a special E-format for mole fraction output is used automatically. A TRACE value of 1.E - 38 is the lowest value allowed by the program.

Intermediate Output. - Intermediate output will be listed for whatever point IDEBUG is set equal to and all following points. As an example, setting IDEBUG = 3 will result in intermediate output for all points except the first two.

Table A6-2 - Variables in INPT2 NAMELIST

Variable	Dimen-sion	Type	Value Before Read	Definition and Comments
KASE	1	1	0	Optional assigned number associated with ease
P	26	R	0	Assigned pressures; chamber pressures for rocket and MHD problems; values in atm unless PSIA, NSQM or MMHG T(see below)
NSQM	1	L	False	[a]Values in P array are in N m^2
PSIA	1	L	False	[a]Values in P array are in psia units
MMHG	1	L	False	[a]Values in P array are in mmhg units
V	26	R	0	Volume, cm^3 g
RHO	26	R	0	Density, g cm^3
	26	R	0	Assigned temperature, K
MIX	15	R	0	Values of equivalence ratios if ERATIO = T: oxidant to fuel weight ratio if OF = T; percent fuel by weight if FPCT = T: and fuel to air weight ratio if FA = T
ERATIO	1	L	False	Equivalence ratios are given in MIX[a]
OF	1	L	False	Oxidant to fuel weight ratios are given in MIX[a]
FPCT	1	L	False	Percent fuel by weight are given in MIX[a]
FA	1	L	False	Fuel to air weight ratios are given in MIX[a]
TRACE	1	R	False	Option to print mole fractions TRACE in special E-format

[a]If variable is set to be true.

Table A6-2 - Variables in INPT2 NAMELIST (Cont' d)

IONS	1	L	False	[a] Consider ionic species
IDEBUG	1	I	0	Print intermediate output for all points indexed integer value
RKT	1	L	False	[a] Rocket or MHD problem
NEQL	1	L	-	[a] Partial equilibrium/partial finite rate chemistry
BZ	1	R	-	
XK	1	R	-	
DXI	1	R	-	Value for the report; axial report interval for the integration
ACCURC	1	R	0.001	Relative accuracy obtained each integration step
HMIN	1	R	1.0×10^{-15}	Smallest stepsize used to obtain the desired accuracy before aborting the program.

Table A6-3 - Variables in RKTINP NAMELIST

Variable	Dimension	Type	Value Before Read	Definitions and Comments
EQL	1	L	TRUE	Calculate rocket performance assuming equilibrium composition during expansion[a]
PCP	26	R	0	Ratio of chamber pressure to exit pressure; list should not include values for the chamber and throat; storage allows for 22 values
SUBAR	13	R	0	Subsonic area ratios
SUPAR	13	R	0	Supersonic area ratios
TCEST	1	R	-	
NFZ	1	I	-	
NEQPT	1	I	100000	First station where finite rate chemistry applies (usually 4)

[a]If variable is set to true.

RKT and MHD Problems. - At least one chamber pressure value P is required in INPT2.

RKTINP Namelist. - This namelist follows the INPT2 namelist. A list of variables and definitions is given in Table 6-3.

Pressure ratio and area ratio schedules must not include values for the chamber and throat inasmuch as these values are assigned or calculated automatically by the program. If both a pressure ratio schedule and an area ratio schedule are given in RKTINP, the pressure ratios will be calculated first. If both schedules are omitted, only chamber and throat conditions will be calculated.

The program will calculate both equilibrium and frozen performance unless RKTINP contains EQL = F.

If NEQL of Namelist INPT2 is set to TRUE, the program will expect REACTION RATE cards following Namelist input of RKTINP.

A.6.5 REACTION RATE Cards

For finite rate problems (NEQL = TRUE), the species involved, the reactions and the forward reaction rates are needed. There are four types of REACTION RATE cards: DLIT, REACTANTS, PRODUCTS and KFRR (forward reaction rate) cards.

DLIT Cards. - These cards (or card) lists those species in the THERMO data that are removed from the equilibrium calculations and handled as finite rate species. Each card contains the word DLIT (in columns 1 to 4) and the names of from one to four species starting in columns 16, 31, 46 and 61.

The DLIT cards must be the first in the series of REACTION RATE cards. The DLIT series of cards is terminated by a blank card. The number of species on DLIT cards must not exceed 30.

The REACTANTS, PRODUCTS and KFRR cards make up a group. One of each is necessary to describe a non-equilibrium reaction. The order of these cards should be REACTANTS, PRODUCTS, KFRR. The last group must be followed by a blank card. The maximum number of equations is 30.

REACTANTS and PRODUCTS Cards. - These cards contain the names of species in the reaction and their coefficients in the chemical equation. Each card contains the word REACTANTS (card 1 to 9) for the reactants side of the equation, or PRODUCTS (and column 1 to 8) for the product side of the chemical equation. The names of from one to four species may be on each card, starting in columns 16, 31, 46 and 61. The coefficients for each of the species (in F3.0 format) start in columns 13, 28, 43 and 58, respectively. Therefore, at most, there can be four species on each side of the chemical equation.

Third body reactions are allowed by using the species name THIRD BODY in the appropriate place.

NOTE: There should be at least one DLIT species on each set of REACTANTS/PRODUCTS cards.

KFRR Cards. - This card describes the forward reaction rate of the reaction described by the REACTANTS/PRODUCTS cards. The card contains the work KFRR (in columns 1 to 4) and three numbers starting in columns 13, 23 and 33. The reaction rate equation is of the form:

$$aT^b e^{-c/T}$$

where:

T is absolute temperature ^oK

a is the first number on the KFRR card

b is the second number on the KFRR card

c is the third number on the KFRR card.

NOTE: If a species is listed in a DLIT card and not in the REACTANTS/PRODUCTS cards, it is considered frozen.

A.6.6 OMIT, SOLUTION and INSERT Cards

OMIT, SOLUTION and/or INSERT cards may follow the REACTANTS cards. Their inclusion is optional. They contain the names of particular species in the library of thermodynamic data for the specific purposes to be discussed. Each card

contains the word OMIT (in card columns 1 to 4), SOLUTION (in card columns 1 to 8), or INSERT (in card columns 1 to 6) and the names of from one to four species starting in columns 16, 31, 46, and 61. The names must be exactly the same as they appear in the THERMO data.

OMIT Cards. - These cards list species to be omitted from the THERMO data. If OMIT cards are not used, the program will consider as possible species all those species in the THERMO data which are consistent with the chemical system being considered. Occasionally it may be desired to specifically omit one or more species from consideration as possible species. This may be accomplished by means of OMIT cards.

INSERT Cards. - These cards contain the names of condensed species only. They have been included as options for two reasons.

The first and more important reason for including the INSERT card option is that, in rare instances, it is impossible to obtain convergence without the use of an INSERT card. This occurs when, by considering gases only, the temperature becomes extremely low (say several degrees Kelvin). In these rare cases, the use of an INSERT card containing the name of the required condensed species will eliminate this kind of convergence difficulty. When this difficulty occurs, the following message is printed by the program: ''LOW TEMPERATURE IMPLIES CONDENSED SPECIES SHOULD HAVE BEEN INCLUDED ON AN INSERT CARD''.

The second and less important reason is that if one knows that one or several particular condensed species will be present among the final equilibrium compositions for the first assigned point, then a small amount of computer time can be saved by using an INSERT card. Those condensed species whose chemical formulas are included on an INSERT card will be considered by the program during the initial iterations for the first assigned point. If the INSERT card were not used, only gaseous species would be considered during the initial iterations. However, after convergence, the program would automatically insert the appropriate condensed species and reconverge. For all other assigned points, the inclusion of condensed species is handled automatically by the program. Therefore, it usually is immaterial whether or not INSERT cards are used for the purpose of saving computer time.

SOLUTION Cards. - These cards list species that are to be considered in an ideal solution. All of the species must be in the THERMO data. The number of species in SOLUTION must not exceed 16.

A.6.7 Description of Program Output

The program prints four kinds of output: tables of results, input data used to calculate these tables, information concerning iteration convergence, and optional intermediate output.

Tables of Results. - The final output of the program is in the form of tables that are designed to be self-explanatory. These features of the tables are:

(1) Heading

(2) Case Number

(3) Reactant Data

(4) Proportion of Oxidant to Fuel

(5) Thermodynamic Mixture Properties and Derivatives (P, T, ρ, h, S, M, $(\Delta \ln V/\Delta \ln P)_T$, $(\Delta \ln V/\Delta \ln T)_p$, c_p, γ_S, and a)

(6) Composition (mole fractions)

(7) P_c/P_e, μ, $A_e A_t$, c^*, C_F, I_{vac}, and I_{sp}

(8) Species in Solution at the Last Report Station

(9) Optionally (NEQL = TRUE) the non-equilibrium species and the finite rate reactions.

Input data have been previously described. The general procedure used in this program is to list the input as they are read in and before they are processed by the program. The purpose is to show, in as clear a way as possible, what is actually on the input cards. All problems list the following input data:

(1) The word REACTANTS

(2) Reactant Data

(3) INSERT and/or OMIT and/or SOLUTION Card Data

(4) The word NAMELISTS

(5) All data in namelist INPT2 given in Table A6-2.

Following the INPT2 data is the statement ''SPECIES BEING CONSIDERED IN THIS SYSTEM''. Each species in the list is preceded by some identification such as J12/65. The J refers to JANAF data.

The namelist RKTINP data given in Table A6-3 are listed.

Following the list of chemical species is the current value of o/f. This is followed by a listing of the enthalpies or internal energies of the total fuel and oxidant and of the total reactant. Following this is a list of the kilogram-atom per kilogram of each element in the total fuel and oxidant and in the total reactant.

A.6.8 Information Concerning the Iteration Procedure

All problems print information regarding iteration for each point. Following the data on kilogram-atoms per kilogram of the reactants is a line containing the letters PT and the chemical symbols of the elements for the problem. The numbers under PT refer to the points corresponding to the columns in the final table. The numbers under the chemical symbols are values of π_i. The last column (without a heading) is the number of iterations required to converge to equilibrium composition.

If IONS = TRUE, the intermediate output from CONDUC is printed. The consentration of the positive and negative ions are listed along with the conductivity.

After point 3, intermediate output from DIFFUN is printed. The value at X is printed along with the values for the equations being solved and their rates.

A.6.9 Intermediate Output

The option of printing intermediate output is provided primarily as a means of obtaining additional information for debugging purposes. There is usually no point in using this option when the program is working well. We have used this option in the past for the following reasons:

(1) To find programming errors
(2) To study the iteration process and rate of convergence
(3) To verify that thermodynamic data have been properly prepared
(4) To study the test for inclusion of condensed species.

As discussed in the NAMELISTS Input section, intermediate output for point N and all following points is obtained by setting IDEBUG = N.

A7. SAMPLE CALCULATIONS

In this section, we reproduce three samples of input and output for the package code. These are referenced by case numbers 2135, 2136, and 2137. These examples include a standard equilibrium calculation using only pure condensed species, one using several condensed species in an ideal solution model and one incorporating the finite rate chemistry option for several selected reactions. All are for conditions of 6 atmospheres combustor pressure and 1.875 atmospheres channel entrance pressure, 5 Tesla magnetic field, a load factor of 0.75, and an equivalence ratio of 1.05. This equivalence ratio was found to be close to that giving the maximum temperature and conductivity. The printout interval is 0.25 meters. All three runs use air preheated to 1900°K as oxidizer and our model of Montana Rosebud Coal.

Turning to the output of the complete equilibrium, pure phase model, case 2135, we find first a listing of the inputs. Then follows a list of all species considered by the calculation. Those species whose label begins with J are modeled using the JANAF table of the given date. Those labeled with an L were modeled at the NASA-Lewis Research Center. Those species with no designating letter were put into the code at ARI on the date given. In the case of most of the neutrals in this group, the thermodynamic parameters were taken from an existing JANAF table. The molecular constants for others, including most of the negative ions, were estimated at ARI from the best available data. We should also note, directly below the listing of reactants, that the OMIT option has been used to prevent consideration of kyanite, $Al_2SiO_5(s)$, which is in fact stable only at high pressures and is not appropriate in this system.

Following the listings of ion densities and conductivities at each channel point, we come to the final output of all generator parameters and species concentrations as a function of position down the channel.

The input for the solution examples differs only in the specification of which species are to be considered in solution, here $Al_2O_3(l)$, $SiO_2(l)$, $MgSiO_3(l)$, and $Fe_3O_4(l)$. The output is only changed by the addition of a comment showing which species remain in solution, which in the last column of run 2136 serves to alert the reader that the alumina has frozen out of the solution.

In the input for the finite rate calculation, Case 2137, we see the use of the DLIT option to designate which species are to be kept out of equilibrium. Then each reaction is specified by giving the reactants, the products, and the forward rate constant in a modified Arrhenius form, in which the first number is the constant in molecular units, the second is the coefficient of the temperature, and the third the activation energy. All of this information is reproduced on a separate page of output immediately preceding the final tables of channel behavior.

In these tables, the mole fractions of nonequilibrium species appear in the very bottom rows. We see that the kinetic option can also be used to give a zero rate to all reactions involving a species, as in Case 2137 where the alumina ($Al_2O_3(l)$) concentration is frozen at its initial combustor value.

CASE 2135 INPUT

```
REACTANTS                                                                                    PAGE ###1


REACTANTS
C 5.74466H 4.46442N 0.07139S 0.03119O 0.90628 0.73279  -38252.0S  298.00T     0.0
SI0.74894FE0.10520AL0.45115MG0.09923O 2.43164 0.06546 -27800 2.0S  298.00T     0.0
CA0.26748B 0.00575P 0.00750 0.29371          0.01278  -4271 0.0S  298.00T     0.0
K 0.01486NA0.09681O 0.05583                  0.00301   -548 0.4S  298.00T     0.0
LI0.00681CL0.00142F 0.00540                  0.00016   -934.8S  298.00T     0.0
K 2.00000C 1.00000O 3.00000                  0.18500 -27490 0.0S  298.00T     0.0
N 2.00000                                    0.76539   12552.7G 1900.00O     0.0
O 2.00000                                    0.23461   1324 0.1G 1900.00O     0.0

OMIT          AL2O5SI(S) K
NAMELISTS
 $INPT2   KASE=2135,P(1)=6.,ERATIO=T,MIX(1)=1.05,DXI=.25,RKT=T,
  IONS=T,TRACE=1.E-9,NEQL=F,BX=5.,XK=.75,ACCURC=1.0E-3,HMIN=1.0E-30,
      $END
 $RKTINP  PCP(1)=3.2,FROZ=F  $END

STOP
```

CASE 2135 OUTPUT

```
REACTANTS
C    5.7447  H    4.4644  N    0.0714  S    0.0312  O    0.9063    0.73279#     -38252.00  S     298.000  0  P     0.00000
SI   0.7489  FE   0.1052  AL   0.4511  MG   0.0992  O    2.4316    0.06546#    -278002.00  S     298.000  0  P     0.00000
CA   0.2675  B    0.0057  P    0.0070  O    0.2937       0.0000    0.01270#     -42710.00  S     298.000  0  P     0.00000
K    0.0149  NA   0.0968  O    0.0558       0.0000       0.0000    0.00301#      -5480.40  S     298.000  0  P     0.00000
LI   0.0068  CL   0.0014  P    0.0054       0.0000       0.0000    0.90016#       -934.80  S     298.000  0  P     0.00000
K    2.0000  C    1.0000  O    3.0000       0.0000       0.0000    0.18500#    -274900.00  S     298.000  0  P     0.00000
N    2.0000       0.0000       0.0000       0.0000       0.0000    0.76539#      12552.70  G    1900.000  0  O     0.00000
O    2.0000       0.0000       0.0000       0.0000       0.0000    0.23461#      13240.10  G    1900.000  0  O     0.00000
OMIT            AL2O5SI(S) K
NAMELISTS
```

```
$INPT2
KASE  =      2135,
T     = 0.000000    , 0.000000    , 0.000000    , 0.000000    ,
 0.000000    , 0.000000    , 0.000000    , 0.000000    , 0.000000    ,
 0.000000    , 0.000000    , 0.000000    , 0.000000    , 0.000000    ,
 0.000000    , 0.000000    , 0.000000    , 0.000000    , 0.000000    ,
 0.000000    , 0.000000    , 0.000000    , 0.000000    , 0.000000    ,
 0.000000    , 0.000000    ,
P     =  6.00000    , 0.000000    , 0.000000    , 0.000000    ,
 0.000000    , 0.000000    , 0.000000    , 0.000000    , 0.000000    ,
 0.000000    , 0.000000    , 0.000000    , 0.000000    , 0.000000    ,
 0.000000    , 0.000000    , 0.000000    , 0.000000    , 0.000000    ,
 0.000000    , 0.000000    , 0.000000    , 0.000000    , 0.000000    ,
 0.000000    , 0.000000    ,
PSIA  = F,
MMHG  = F,
NSQM  = F,
V     = 0.000000    , 0.000000    , 0.000000    , 0.000000    ,
 0.000000    , 0.000000    , 0.000000    , 0.000000    , 0.000000    ,
 0.000000    , 0.000000    , 0.000000    , 0.000000    ,
RHO   =  6.00000    , 0.000000    , 0.000000    , 0.000000    ,
 0.000000    , 0.000000    , 0.000000    , 0.000000    , 0.000000    ,
 0.000000    , 0.000000    , 0.000000    , 0.000000    , 0.000000    ,
 0.000000    , 0.000000    , 0.000000    , 0.000000    , 0.000000    ,
 0.000000    , 0.000000    , 0.000000    , 0.000000    , 0.000000    ,
 0.000000    , 0.000000    ,
ERATIO= T,
OF    = F,
FPCT  = F,
FA    = F,
MIX   =  1.05000    , 0.000000    , 0.000000    , 0.000000    ,
 0.000000    , 0.000000    , 0.000000    , 0.000000    , 0.000000    ,
 0.000000    , 0.000000    , 0.000000    , 0.000000    , 0.000000    ,
 0.000000    ,
TP    = F,
HP    = F,
SP    = F,
TV    = F,
UV    = F,
SV    = F,
RKT   = T,
SHOCK = F,
DETN  = F,
OTTO  = F,
CR    = 0.000000    ,
SO    = 0.000000    ,
SO    = 0.000000    ,
IONS  = T,
IDEBUG=         0,
TRACE = 0.100000E-08,
SIUNIT= F,
EOPGM = 0.000000    , 0.000000    , 0.000000    , 0.000000    ,
 0.000000    , 0.000000    , 0.000000    , 0.000000    , 0.000000    ,
 0.000000    ,
HP    = F,
DXI   = 0.250000    ,
NITER =         0,
NSTOP =         0,
NEQL  = F,
BE    =  5.00000    ,
XK    = 0.750000    ,
ACCURC= 0.100000E-02,
HMIN  = 0.100000E-29,
```

```
$END
LIMIT =
              C
              H
              N
              S
              O
              SI
              FE
              AL
              MG
              CA
              B
              P
              K
              NA
              LI
              CL
              F
SPECIES BEING CONSIDERED IN THIS SYSTEM
    J12/65  AL(S)          J12/65  AL(L)          J12/65  AL           J 6/65  AL+           J 6/66  ALBO2
    J 6/7#  ALCL           J 6/7#  ALCL+          J 9/64  ALCLF         J 9/64  ALCLF2        J 6/72  ALCL2
    J 6/72  ALCL2+         J 6/72  ALCL2-         J 9/64  ALCL3F        J 6/7#  ALCL3(S)      J 6/7#  ALCL3(L)
    J 6/7#  ALCL3          J 6/69  ALF            J 6/68  ALF+          J 6/72  ALF2          J 6/72  ALF2+
    J 6/72  ALF2-          J 6/7#  ALF3(S)        J 6/7#  ALF3(S)       J 6/7#  ALF3          J 6/63  ALH
    J12/62  ALH(S)         J 3/67  ALH            J 6/7#  ALO          J 6/7#  ALO+          J 12/7  ALO-
    J 9/64  ALOCL          J 3/64  ALOF           J12/67  ALOH          J12/67  ALOH+         J12/67  ALOH-
    J12/68  ALO2           3/8/7   ALO2-          J12/68  ALO2H         3/9/7   ALO2H2        J 6/7#  AL2CL6
    J 6/7#  AL2F6          J 6/72  AL2O           J 6/72  AL2O+         J 9/65  AL2O2         J 6/68  AL2O2+
    J 6/72  AL2O3(S)       J 6/72  AL2O3(L)       4/13/7  AL6O13SI2     3/8/7   ALS           J12/64  B(S)
    J12/64  B(L)           J12/64  B              J12/7#  B+            J12/64  BCL           J 6/68  BCL+
    J12/64  BCLF           3/8/7   BCLO           J 6/72  BCL2         J12/7#  BCL2+         J 6/72  BCL2-
    4/13/7  BCL2H          J12/64  BCL3           J12/64  BF           J 6/72  BF2           J12/7#  BF2+
    J 6/72  BF2-           J 6/69  BF3            J12/64  BH           J12/65  BHF2          J12/64  BH2
    3/8/7   BH2O2          J12/64  BH3            J 6/66  BH(S)        J 6/66  BH           3/3/7   BO-
    J 6/68  BO             J 3/65  BOCL           J 3/65  BOF          J12/66  BOF2          J 6/68  BO2
    J12/68  BO2-           J 6/72  BS             J12/64  B2           J 6/66  B2O           J12/64  B2O2
    J 6/71  B2O3(L)        J 6/71  B2O3           J 3/65  B3O3CL3      J 3/65  B3O3F3        J 3/61  C(S)
    J 3/61  C              L12/66  C+             J 9/65  C-           3/8/7   CAL           3/8/7   CB
    3/3/7   C3-            3/3/7   C2H-          J12/69  CCL          J12/68  CCL2          J 6/7#  CCL3
    J12/68  CCL4           J 6/7#  CF             J12/7#  CF+          J 6/7#  CF2           J12/7#  CF2+
    J 6/69  CF3            J12/71  CF3+           J 6/69  CF4          J12/67  CH            J12/71  CH+
    J12/72  CH2            J 3/61  CH2O           J 6/69  CH3          J 3/61  CH4           3/8/7   CHCL
    J 6/69  CH             J12/7#  CH+            J12/7#  CH-          J 6/66  CHN           J12/7#  CH2
    J 9/65  CO             J12/65  COCL           J 6/61  COCL2        J12/65  COF           J12/69  COF2
    J 3/61  COS            3/3/7   COS-           J 9/65  CO2          4/12/7  CO2-          3/3/7   CO3-
    3/7/7   CO4-           J 6/62  CP             J12/62  CS           3/3/7   CS-           J 6/61  CS2
    J12/69  C2             J12/69  C2-            J12/68  C2CL2        J12/67  C2F2          J 6/69  C2F4
    J 3/67  C2H            J12/67  C2HF           J 3/61  C2H2         J 9/65  C2H4          L 5/72  C2H6
    J 3/67  C2N            J 3/61  C2N2           J 9/66  C2O          J12/69  C3            J 6/68  C3O2
    J12/69  C4             J12/69  C5             J12/68  CA(S)        J12/68  CA(S)         J12/68  CA(L)
    J12/68  CA             J12/7#  CA+            BAR 73  CACO3(S)     BAR 73  CACO3(S)      J 6/7#  CACL
    J 6/7#  CACL2(S)       J 6/7#  CACL2(L)       J 6/7#  CACL2        J12/68  CAF           J12/68  CAF2(S)
    J12/68  CAF2(S)        J12/68  CAF2(L)        J12/68  CAF2         J 6/71  CAO(S)        J 6/71  CAO(L)
    J12/74  CAO            J 6/7#  CAOH           J 6/7#  CAOH+        J12/71  CAO2H2(S)     J 12/7  CAO2H2
    J12/71  CAS(S)         BAR 73  CASO4(S)       J 6/72  CL           J 6/65  CL+           J 6/65  CL-
    J 6/66  CLCN           J 9/65  CLF            J 9/65  CLF3         3/8/7   CLHO          J 6/61  CLO
    3/3/7   CLO-           J 3/61  CLO2           3/3/7   CLO2-        3/8/7   CLP           J 9/65  CL2
    J12/65  CL2O           L8/67   H              J 9/65  F            J12/71  F-            J 6/69  FCN
    J12/66  FO             J 9/66  FO2            J12/68  F2           J12/69  F2O           J 3/65  FE(S)
    J 3/65  FE(S)          J 3/65  FE(S)          J 3/65  FE(L)        J 3/65  FE            J 6/65  FECL
    J12/7#  FECL2(S)       J12/7#  FECL2(L)       J12/7#  FECL2        J 6/65  FECL3(S)      J 6/65  FECL3(L)
    J 6/65  FECL3          J 6/65  FEO(S)         J 6/65  FEO(L)       J 9/66  FEO           4/13/7  FEO-
```

4/28/7	FEO2	4/13/7	FEO2-	J 6/66	FEO2H2(S)	J12/66	FEO2H2	J 6/66	FEO3H3(S)
BAR 73	FES(S)	BAR 73	FES(S)	BAR 73	FES(S)	J 6/66	FESO4(S)	BAR 73	FES2(S)
J12/78	FE2CL4	J 6/65	FE2O3(S)	28/7	FE2S3(L)	9/28/7	FE3O4(L)	J 6/66	FE2S3O12(S)
J 6/65	FE3O4(S)	J 9/65	H	J 6/66	H+	J 9/65	H-	J 3/64	HALO
3/8/7	HBO	3/8/7	HBO+	J12/64	HBO2	J12/75	HBS	J12/75	HBS+
J 9/64	HCL	L12/69	HCN	J12/78	HCO	J12/78	HCO+	3/8/7	HCO3-
J12/69	HCP	J12/68	HF	3/8/7	HK	J12/78	HNCO	J 3/63	HNO
J 6/63	HNO2	J 6/63	HNO3	J12/72	HOF	J 3/64	HO2	J 6/72	HSO3F
J 3/61	H2	L11/65	H2O(S)	L11/65	H2O(L)	J 3/61	H2O	L 2/69	H2O2
3/8/7	H2P	J12/65	H2S	J12/66	H2SO4(L)	J12/66	H2SO4	J12/64	H3B3O6
3/25/7	H3O+	3/3/7	HP-	3/3/7	HS-	3/3/7	HSI-	J12/61	K(S)
J12/61	K(L)	J 6/62	K	J 3/65	K+	3/3/7	K-	J 6/71	KBO2
3/8/7	KCN	J 3/66	KCL(S)	J 3/66	KCL(L)	J 3/66	KCL	J 6/69	KF(S)
J 6/69	KF(L)	J 6/69	KF	J12/68	KF2-	J 6/71	KHF2(S)	J 6/71	KHF2(S)
J 6/71	KHF2(L)	J 3/66	K2CO3(S)	J 3/66	K2CO3(L)	J 6/69	K2F2	J12/67	KO
J12/67	KO-	J12/78	KOH	J12/78	KOH(S)	J12/78	KOH(S)	J12/78	KOH(L)
J12/71	KOH+	J12/61	K2	J 6/63	K2O(S)	J12/78	K2O2H2	J12/71	K2SO4(S)
J12/71	K2SO4(S)	J12/71	K2SO4(L)	J 6/62	LI(S)	J 6/62	LI(L)	J 6/62	LI
J 3/65	LI+	3/3/7	LI-	J 6/71	LIBO2	3/3/7	NA-	J 6/71	NABO2
J 6/62	LICL(S)	J 6/62	LICL(L)	J 6/62	LICL	J12/68	LIF(S)	J12/68	LIF(L)
J12/68	LIF	J12/68	LIF2-	J 9/65	LIFO	J 9/67	LIN(S)	J 9/67	LIN(L)
J 9/67	LIN	J12/66	LIN	3/8/7	LINAO	J 3/64	LIO	J12/67	LIO-
J 6/71	LION(S)	J 6/71	LION(L)	J 6/71	LIOH	J12/71	LIOH+	J 9/66	LION
J 6/62	LI2	J 6/62	LI2CL2	J12/68	LI2F2	J 3/64	LI2O(S)	J 3/64	LI2O(L)
J 3/64	LI2O	J 3/64	LI2O2	J 6/71	LI2O2H2	J 6/62	LI3CL3	J12/68	LI3F3
J 9/62	MG(S)	J 9/62	MG(L)	J 9/62	MG	J12/78	MG+	J12/66	MGCO3(S)
J 3/66	MGCL	J 6/68	MGCL+	J 3/66	MGCLF	J12/65	MGCL2(S)	J12/65	MGCL2(L)
J12/69	MGCL2	J 3/67	MGF	J 3/66	MGF2(S)	J 3/66	MGF2(L)	J 3/66	MGF2
J12/66	MGH	J 3/64	MGH	J12/65	MGO(S)	J12/65	MGO(L)	J12/65	MGO
J 6/67	MGOH	J 6/68	MGOH+	J 6/67	MGO2H2	J12/71	MGS(S)	J 6/71	MGS
L 7/76	MGSO4(S)	L 7/76	MGSO4(L)	J12/67	MGSIO3(S)	J12/67	MGSIO3(S)	J12/67	MGSIO3(S)
J12/67	MGSIO3(L)	J12/75	MG2F4	J12/67	MG2SIO4(S)	J12/67	MG2SIO4(L)	J 3/61	N
J 6/65	NF	J12/78	NCO	J 3/64	NF2	J 6/69	NF3	J12/71	NH
J12/65	NH2	J 9/65	NH3	J 6/63	NO	3/3/7	NO-	J12/72	NOCL
J 6/66	NO+	J 6/61	NOF	J 6/78	NOF3	J 9/64	NO2	J 6/72	NO2-
J12/65	NO2CL	J12/65	NO2F	J12/64	NO3	3/3/7	NO3-	J 9/65	N2
J12/65	N2H4	J12/64	N2O	J12/78	N2O+	J 9/64	N2O4	J12/64	N2O5
J12/78	N3	J 6/62	NA(S)	J 6/62	NA(L)	J 6/62	NA	J 3/65	NA+
J 9/64	NACL(S)	J 9/64	NACL(L)	J12/64	NACL	J12/68	NAF(S)	J12/68	NAF(L)
J12/68	NAF	J12/68	NAF2-	J 3/63	NAH	J12/67	NAO	J12/67	NAO-
J12/78	NAOH(S)	J12/78	NAOH(L)	J12/78	NAOH	J12/71	NAOH+	J 6/62	NA2
J 3/66	NA2CO3(S)	J 3/66	NA2CO3(S)	J 3/66	NA2CO3(L)	J12/64	NA2CL2	J12/68	NA2F2
J 6/68	NA2O(S)	J 6/68	NA2O(S)	J 6/68	NA2O(L)	J12/78	NA2O2H2	J12/66	NA2SO4(S)
J12/66	NA2SO4(S)	J12/66	NA2SO4(S)	J12/66	NA2SO4(L)	K11/74	NA2SO4	J 6/62	O
L12/66	O+	J 6/65	O-	J12/78	OH	J12/78	OH+	J12/78	OH-
J 9/65	O2	J12/66	O2-	J 6/61	O3	J 6/62	P	J 6/61	P(S)
L12/66	P+	3/3/7	P-	J 6/78	PCL3	J12/69	PF3	J12/69	PF5
J 6/67	PH	J 6/62	PH3	J 9/62	PH	J 6/71	PO	3/3/7	PO-
3/7/7	PO2	3/3/7	PO2-	J 6/67	PS	J 6/61	P2	J 6/61	P4
J12/65	S(S)	J12/65	S(L)	J 6/71	S	L12/66	S+	3/3/7	S-
J12/69	SF4	J 9/65	SF6	J 6/67	SH	J 6/61	SN	J 6/71	SO
3/3/7	SO-	J 6/72	SOF2	J 6/61	SO2	3/3/7	SO2-	J 6/71	SO2CL2
J 6/71	SO2CLF	J 6/71	SO2F2	J 9/65	SO3	3/3/7	SO3-	J12/65	S2
3/3/7	S2-	J6/64	SS	J 3/67	SI(S)	J 3/67	SI(L)	J 3/67	SI
J12/71	SI+	3/3/7	SI-	J 3/67	SIC	4/25/7	SIC(S)	J 3/67	SIC2
J 9/67	SICL	J12/78	SICL2	J12/69	SICL3	J12/78	SICL4	J12/69	SIF
J12/68	SIF2	J 6/78	SIF3	J 9/63	SIF4	J12/69	SIH	J12/71	SIH+
J12/68	SIH4	J 3/67	SIN	J 9/67	SIO	J 6/67	SIO2(S)	J 6/67	SIO2(S)
J 6/67	SIO2(S)	J 6/67	SIO2(L)	J 9/67	SIO2	J12/71	SIS	J 3/67	SI2
J 3/67	SI2C	J 3/67	SI2N	J 3/67	SI3				
513	18	13#	67	#	8		647		
C									
N									
N									

```
          S
          O
          SI
          FE
          AL
          MG
          CA
          B
          P
          K
          NA
          LI
          CL
          F
          E
$REXTINP
EQL   = T,
FROZ  = F,
SUBAR = 0.000000    , 0.000000    , 0.000000    , 0.000000    ,
 0.000000    , 0.000000    , 0.000000    , 0.000000    , 0.000000    ,
 0.000000    , 0.000000    , 0.000000    , 0.000000    ,
SUPAR = 0.000000    , 0.000000    , 0.000000    , 0.000000    ,
 0.000000    , 0.000000    , 0.000000    , 0.000000    , 0.000000    ,
 0.000000    , 0.020000    , 0.000000    , 0.000000    ,
PCP   =  3.20000    , 0.000000    , 0.000000    , 0.000000    ,
 0.000000    , 0.000000    , 0.000000    , 0.000000    , 0.000000    ,
 0.000000    , 0.000000    , 0.000000    , 0.000000    , 0.000000    ,
 0.000000    , 0.000000    , 0.000000    , 0.000000    , 0.000000    ,
 0.000000    , 0.020000    , 0.000000    ,
TCEST =  3000.00    ,
NPR   =        1,
NEQPT =     100000,
RKTO  = F,
$END

OF =   6.765485
                          EFFECTIVE FUEL          EFFECTIVE OXIDANT          MIXTURE
ENTHALPY                      HPP(2)                  HPP(1)                 HSUBM
(KG-MOL)(DEG K)/KG      -0.47671753E 03          0.22144238E 03          0.13153687E 03

KG-ATOMS/KG                  BFP(I,2)                BFP(I,1)                 BM(I)
      C                   0.48110025E-01          0.00000000E 00          0.61963964E-02
      H                   0.36349855E-01          0.00000000E 00          0.46809511E-02
      N                   0.58126613E-03          0.54644562E-01          0.47682561E-01
      S                   0.25395281E-03          0.00000000E 00          0.32702759E-04
      O                   0.13676232E-01          0.14663674E-01          0.14536515E-01
      SI                  0.68977309E-03          0.00000000E 00          0.78523502E-04
      FE                  0.85651889E-04          0.00000000E 00          0.11029017E-04
      AL                  0.36731793E-03          0.00000000E 00          0.47301350E-04
      MG                  0.80791229E-04          0.00000000E 00          0.10403806E-04
      CA                  0.21772708E-03          0.00000000E 00          0.20037899E-04
      B                   0.46804026E-05          0.00000000E 00          0.60272085E-06
      P                   0.57386778E-05          0.00000000E 00          0.73899798E-06
      K                   0.27006865E-02          0.00000000E 00          0.34770076E-03
      NA                  0.70757424E-04          0.00000000E 00          0.10141983E-04
      LI                  0.54428519E-05          0.00000000E 00          0.70903000E-06
      CL                  0.11349266E-05          0.00000000E 00          0.14615011E-06
      F                   0.43159188E-05          0.00000000E 00          0.55570209E-06
      E                   0.00000000E 00          0.00000000E 00          0.00000000E 00

PT      C       E       H       S       O       SI      FE      AL      MG      CA      B       P       K       NA
   LI      CL      F       E
 1    -18.366 -12.133 -13.390 -23.485 -16.137 -23.466 -15.320 -22.951 -23.057 -24.002 -30.341 -28.214 -22.352 -24.021
   -24.633 -32.315 -34.943 -14.427  20.000
```

```
ADD AL2O3(L)
 1    -18.359  -12.125  -13.392  -23.478  -16.138  -23.464  -15.335  -23.857  -23.061  -24.085  -30.322  -28.224  -22.355  -24.027
   -24.637  -32.312  -34.903  -14.217    4.000

                                    ION NUMBER DENSITY AND CONDUCTIVITY AT POINT   1
     ION          DENS (M-3)          ION          DENS (M-3)          ION          DENS (M-3)          ION          DENS (M-3)

  1  CA+          8.133E 15       2  CAOH+        1.065E 17       3  K+           1.221E 21       4  KOH+         2.925E 16
  5  LI+          6.710E 15       6  NA+          1.093E 18

  1  ALO-         2.264E 19       2  ALOH-        3.414E 15       3  ALO2-        3.797E 20       4  BO-          4.075E 15
  5  BO2-         3.510E 18       6  CN-          6.801E 15       7  CO2-         1.826E 18       8  CO3-         2.455E 16
  9  CL-          8.732E 17      10  F-           6.358E 16      11  FEO-         5.455E 17      12  FEO2-        5.900E 19
 13  H-           4.131E 17      14  HCO3-        1.452E 17      15  HS-          1.615E 17      16  K-           2.883E 17
 17  KO-          3.403E 18      18  NA-          1.315E 16      19  NO-          2.252E 17      20  NO2-         8.052E 17
 21  NAO-         1.041E 17      22  O-           1.331E 19      23  OH-          5.520E 19      24  O2-          2.733E 18
 25  PO-          3.331E 15      26  PO2-         2.881E 19      27  S-           7.717E 16      28  SO-          5.060E 17
 29  SO2-         2.238E 18      30  SO3-         1.325E 16
CONDUCTIVITY = 14.2233  (MHO/M)

 2    -18.912  -12.401  -13.549  -23.856  -16.416  -23.772  -14.687  -25.075  -23.136  -24.378  -31.390  -28.620  -22.542  -24.143
   -24.848  -32.936  -35.751  -14.940    5.000
ADD CAO(S)
 2    -18.911  -12.401  -13.550  -23.856  -16.416  -23.772  -14.689  -25.072  -23.137  -24.483  -31.387  -28.619  -22.542  -24.144
   -24.848  -32.934  -35.749  -14.939    3.000

                                    ION NUMBER DENSITY AND CONDUCTIVITY AT POINT   2
     ION          DENS (M-3)          ION          DENS (M-3)          ION          DENS (M-3)          ION          DENS (M-3)

  1  CA+          1.321E 15       2  CAOH+        2.339E 16       3  K+           4.915E 20       4  KOH+         5.579E 15
  5  LI+          1.666E 15       6  NA+          6.340E 17

  1  ALO-         4.197E 18       2  ALO2-        1.078E 20       3  BO2-         1.567E 18       4  CN-          1.172E 15
  5  CO2-         5.362E 17       6  CO3-         6.669E 15       7  CL-          3.929E 17       8  F-           2.425E 16
  9  FEO-         2.362E 17      10  FEO2-        4.003E 19      11  H-           9.760E 16      12  HCO3-        5.698E 16
 13  HS-          4.330E 16      14  K-           9.802E 16      15  KO-          1.234E 18      16  NA-          4.622E 15
 17  NO-          4.782E 16      18  NO2-         2.447E 17      19  NAO-         3.879E 16      20  O-           3.460E 18
 21  OH-          1.936E 19      22  O2-          7.228E 17      23  PO2-         2.010E 19      24  S-           1.956E 16
 25  SO-          1.404E 17      26  SO2-         9.400E 17      27  SO3-         5.383E 15
CONDUCTIVITY = 10.7595  (MHO/M)

PC/PT= 1.740098    T=   2703.00
 2    -18.910  -12.400  -13.550  -23.855  -16.415  -23.771  -14.690  -25.071  -23.137  -24.482  -31.386  -28.619  -22.542  -24.143
   -24.848  -32.934  -35.749  -14.938    2.000

                                    ION NUMBER DENSITY AND CONDUCTIVITY AT POINT   2
     ION          DENS (M-3)          ION          DENS (M-3)          ION          DENS (M-3)          ION          DENS (M-3)

  1  CA+          1.324E 15       2  CAOH+        2.343E 16       3  K+           4.919E 20       4  KOH+         5.586E 15
  5  LI+          1.668E 15       6  NA+          6.346E 17

  1  ALO-         4.203E 18       2  ALO2-        1.079E 20       3  BO2-         1.568E 18       4  CN-          1.174E 15
  5  CO2-         5.368E 17       6  CO3-         6.677E 15       7  CL-          3.932E 17       8  F-           2.427E 16
  9  FEO-         2.364E 17      10  FEO2-        4.004E 19      11  H-           9.772E 16      12  HCO3-        5.702E 16
 13  HS-          4.334E 16      14  K-           9.811E 16      15  KO-          1.235E 18      16  NA-          4.626E 15
 17  NO-          4.789E 16      18  NO2-         2.449E 17      19  NAO-         3.882E 16      20  O-           3.464E 18
 21  OH-          1.938E 19      22  O2-          7.236E 17      23  PO2-         2.011E 19      24  S-           1.959E 16
 25  SO-          1.405E 17      26  SO2-         9.407E 17      27  SO3-         5.387E 15
CONDUCTIVITY = 10.7624  (MHO/M)

PC/PT= 1.739298    T=   2703.22
```

```
 3    -19.534  -12.715  -13.722  -24.250  -16.777  -24.081  -13.874  -26.546  -23.199  -25.749  -32.645  -29.027  -22.736  -24.246
   -25.000  -33.704  -36.777  -15.842    6.000
ADD MGSIO3(L)
 3    -19.521  -12.710  -13.725  -24.240  -16.777  -24.200  -13.896  -26.805  -25.184  -25.716  -32.610  -29.018  -22.739  -24.254
   -25.070  -33.692  -36.762  -15.825    5.000
ADD SIC(S)
 3    -19.559  -12.719  -13.728  -24.285  -16.746  -24.647  -13.948  -26.494  -24.722  -25.701  -32.614  -29.061  -22.751  -24.268
   -25.091  -33.669  -36.731  -15.808    4.000
ADD SIO2(L)
 3    -19.530  -12.712  -13.720  -24.255  -16.760  -24.669  -13.940  -26.465  -24.644  -25.681  -32.583  -29.032  -22.748  -24.267
   -25.084  -33.671  -36.734  -15.802    3.000

                                    ION NUMBER DENSITY AND CONDUCTIVITY AT POINT   3
     ION          DENS (M-3)          ION          DENS (M-3)          ION          DENS (M-3)          ION          DENS (M-3)

  1  CAOH+        2.050E 15       2  K+           1.830E 20       3  NA+          1.917E 17

  1  ALO-         5.797E 17       2  ALO2-        2.389E 19       3  BO2-         5.966E 17       4  CO2-         1.251E 17
  5  CO3-         1.403E 15       6  CL-          1.492E 17       7  F-           7.671E 15       8  FEO-         8.725E 16
  9  FEO2-        2.431E 19      10  H-           1.824E 16      11  HCO3-        1.053E 16      12  HS-          9.744E 15
 13  K-           2.794E 16      14  KO-          3.721E 17      15  NA-          1.370E 15      16  NO-          7.754E 15
 17  NO2-         5.877E 16      18  NAO-         1.209E 16      19  O-           6.990E 17      20  OH-          5.579E 18
 21  O2-          1.464E 17      22  PO2-         1.297E 19      23  S-           4.070E 15      24  SO-          3.188E 16
 25  SO2-         3.370E 17      26  SO3-         1.851E 15
CONDUCTIVITY =  7.3220  (MHO/M)


DIFFUN  -  X=   0.0000E-01    AVN=   1.6320E 26
    1  1.8998E 05 -6.0661E 04      2  9.1652E 03  2.2119E 01
ADD FE3O4(L)
 4    -19.599  -12.750  -13.756  -24.299  -16.806  -24.819  -13.948  -26.606  -24.748  -25.804  -32.703  -29.076  -22.781  -24.293
   -25.114  -33.758  -36.851  -15.895    4.000

                                    ION NUMBER DENSITY AND CONDUCTIVITY AT POINT   4
     ION          DENS (M-3)          ION          DENS (M-3)          ION          DENS (M-3)          ION          DENS (M-3)

  1  CAOH+        1.567E 15       2  K+           1.620E 20       3  NA+          1.663E 17

  1  ALO-         4.693E 17       2  ALO2-        2.019E 19       3  BO2-         5.343E 17       4  CO2-         1.050E 17
  5  CO3-         1.155E 15       6  CL-          1.334E 17       7  F-           6.700E 15       8  FEO-         7.111E 16
  9  FEO2-        2.073E 19      10  H-           1.515E 16      11  HCO3-        1.592E 16      12  HS-          8.261E 15
 13  K-           2.416E 16      14  KO-          3.210E 17      15  NA-          1.187E 15      16  NO-          6.260E 15
 17  NO2-         4.917E 16      18  NAO-         1.044E 16      19  O-           5.839E 17      20  OH-          4.816E 18
 21  O2-          1.211E 17      22  PO2-         1.218E 19      23  S-           3.444E 15      24  SO-          2.695E 16
 25  SO2-         2.968E 17      26  SO3-         1.610E 15
CONDUCTIVITY =  7.1320  (MHO/M)


DIFFUN  -  X=   6.2560E-01    AVN=   1.3467E 26
    1  1.5353E 05 -5.6393E 04      2  9.1802E 03  2.5384E 01
 5    -19.675  -12.792  -13.785  -24.345  -16.857  -24.986  -13.970  -26.761  -24.864  -25.940  -32.835  -29.124  -22.815  -24.320
   -25.146  -33.854  -36.979  -15.997    4.000

                                    ION NUMBER DENSITY AND CONDUCTIVITY AT POINT   5
     ION          DENS (M-3)          ION          DENS (M-3)          ION          DENS (M-3)          ION          DENS (M-3)

  1  CAOH+        1.165E 15       2  K+           1.432E 20       3  NA+          1.424E 17

  1  ALO-         3.719E 17       2  ALO2-        1.679E 19       3  BO2-         4.737E 17       4  CO2-         8.672E 16
```

```
  5  CL-          1.181E 17     6  F-          5.797E 15     7  FEO-         5.613E 16     8  FEO2-        1.722E 19
  9  H-           1.237E 16    10  HCO3-       1.353E 16    11  HS-          6.906E 15    12  K-           2.063E 16
 13  KO-          2.736E 17    14  MA-         1.016E 15    15  MO-          4.970E 15    16  MO2-         4.051E 16
 17  MAO-         8.910E 15    18  O-          4.788E 17    19  OH-          4.104E 18    20  O2-          9.849E 16
 21  PO2-         1.139E 19    22  S-          2.863E 15    23  SO-          2.244E 16    24  SO2-         2.588E 17
 25  SO3-         1.386E 15
CONDUCTIVITY =  6.9207  (MHO/M)


DIFFUN  -  X=   8.7568E-01    AVN=   1.2368E 26
    1  1.3968E 05 -5.4390E 04     2  9.1867E 03  2.6883E 01
 6    -19.755  -12.836  -13.816  -24.395  -16.911  -25.167  -13.993  -26.930  -24.990  -26.087  -32.978  -29.176  -22.851  -24.348
   -25.180  -33.957  -37.116  -16.107    4.000

                                    ION NUMBER DENSITY AND CONDUCTIVITY AT POINT   6
     ION          DENS (M-3)          ION          DENS (M-3)          ION          DENS (M-3)          ION          DENS (M-3)

  1  K+           1.249E 20     2  MA+          1.286E 17

  1  ALO-         2.892E 17     2  ALO2-        1.375E 19     3  BO2-         4.161E 17     4  CO2-         7.067E 16
  5  CL-          1.036E 17     6  F-          4.953E 15     7  FEO-         4.347E 16     8  FEO2-        1.409E 19
  9  H-           9.940E 15    10  HCO3-       1.137E 16    11  HS-          5.700E 15    12  K-           1.742E 16
 13  KO-          2.306E 17    14  MO-         3.873E 15    15  MO2-         3.291E 16    16  MAO-         7.522E 15
 17  O-           3.865E 17    18  OH-         3.455E 18    19  O2-          7.882E 16    20  PO2-         1.061E 19
 21  S-           2.348E 15    22  SO-         1.844E 16    23  SO2-         2.235E 17    24  SO3-         1.181E 15
CONDUCTIVITY =  6.6911  (MHO/M)


DIFFUN  -  X=   1.1257E 00    AVN=   1.1201E 26
    1  1.2635E 05 -5.2186E 04     2  9.1936E 03  2.8483E 01
 7    -19.842  -12.883  -13.849  -24.448  -16.970  -25.564  -14.020  -27.113  -25.126  -26.247  -33.133  -29.230  -22.889  -24.377
   -25.217  -34.068  -37.265  -16.227    4.000

                                    ION NUMBER DENSITY AND CONDUCTIVITY AT POINT   7
     ION          DENS (M-3)          ION          DENS (M-3)          ION          DENS (M-3)          ION          DENS (M-3)

  1  K+           1.000E 20     2  MA+          1.010E 17

  1  ALO-         2.202E 17     2  ALO2-        1.100E 19     3  BO2-         3.617E 17     4  CO2-         5.671E 16
  5  CL-          8.991E 16     6  F-          4.179E 15     7  FEO-         3.296E 16     8  FEO2-        1.134E 19
  9  H-           7.851E 15    10  HCO3-       9.442E 15    11  HS-          4.638E 15    12  K-           1.452E 16
 13  KO-          1.919E 17    14  MO-         2.960E 15    15  MO2-         2.632E 16    16  MAO-         6.273E 15
 17  O-           3.067E 17    18  OH-         2.871E 18    19  O2-          6.197E 16    20  PO2-         9.841E 18
 21  S-           1.896E 15    22  SO-         1.493E 16    23  SO2-         1.910E 17
CONDUCTIVITY =  6.4381  (MHO/M)


DIFFUN  -  X=   1.3757E 00    AVN=   1.0272E 26
    1  1.1362E 05 -4.9773E 04     2  9.2010E 03  3.0178E 01
 8    -19.935  -12.934  -13.883  -24.504  -17.033  -25.578  -14.049  -27.312  -25.275  -26.420  -33.302  -29.288  -22.929  -24.406
   -25.255  -34.180  -37.425  -16.356    4.000

                                    ION NUMBER DENSITY AND CONDUCTIVITY AT POINT   8
     ION          DENS (M-3)          ION          DENS (M-3)          ION          DENS (M-3)          ION          DENS (M-3)

  1  K+           9.232E 19     2  MA+          8.350E 16

  1  ALO-         1.637E 17     2  ALO2-        8.762E 18     3  BO2-         3.108E 17     4  CO2-         4.474E 16
```

```
  5  CL-          7.71#E 16      6  F-           3.478E 15      7  FEO-         2.44#E 16      8  FEO2-        8.961E 18
  9  H-           6.#82E 15     1#  HCO3-        7.742E 15     11  HS-          3.714E 15     12  K-           1.193E 16
 13  KO-          1.574E 17     14  NO-          2.215E 15     15  NO2-         2.#69E 16     16  NAO-         5.161E 15
 17  O-           2.387E 17     18  OH-          2.35#E 18     19  O2-          4.777E 16     2#  PO2-         9.#85E 18
 21  S-           1.5#6E 15     22  SO-          1.189E 16     23  SO2-         1.613E 17
CONDUCTIVITY =  6.1595  (MHO/M)


DIFFUN  -  X=   1.6257E ##    AVH=   9.2847E 25
    1  1.#153E #5 -4.7131E #4      2  9.2#88E #3  3.1941E #1
 9    -2#.#35  -12.989  -13.919  -24.563  -17.1#1  -25.813  -14.#82  -27.53#  -25.437  -26.61#  -33.485  -29.349  -22.97#  -24.436
   -25.297  -34.318  -37.598  -16.498    4.###

                                          ION NUMBER DENSITY AND CONDUCTIVITY AT POINT   9
     ION          DENS (M-3)          ION          DENS (M-3)          ION          DENS (M-3)          ION          DENS (M-3)

  1  K+           7.8#7E 19      2  NA+          6.8#9E 16

  1  ALO-         1.185E 17      2  ALO2-        6.786E 18      3  BO2-         2.636E 17      4  CO2-         3.464E 16
  5  CL-          6.524E 16      6  F-           2.849E 15      7  FEO-         1.759E 16      8  FEO2-        6.936E 18
  9  H-           4.611E 15     1#  HCO3-        6.259E 15     11  HS-          2.924E 15     12  K-           9.6#8E 15
 13  KO-          1.272E 17     14  NO-          1.618E 15     15  NO2-         1.596E 16     16  NAO-         4.184E 15
 17  O-           1.818E 17     18  OH-          1.892E 18     19  O2-          3.6#2E 16     2#  PO2-         8.345E 18
 21  S-           1.173E 15     22  SO-          9.297E 15     23  SO2-         1.345E 17
CONDUCTIVITY =  5.8541  (MHO/M)


DIFFUN  -  X=   1.8757E ##    AVH=   8.342#E 25
    1  9.#112E #4 -4.4213E #4      2  9.217#E #3  3.3723E #1
1#    -2#.142  -13.#47  -13.958  -24.627  -17.175  -26.#68  -14.119  -27.769  -28.615  -26.817  -33.685  -29.414  -23.#14  -24.467
   -25.34#  -34.458  -37.785  -16.652    4.###

                                          ION NUMBER DENSITY AND CONDUCTIVITY AT POINT  1#
     ION          DENS (M-3)          ION          DENS (M-3)          ION          DENS (M-3)          ION          DENS (M-3)

  1  K+           6.524E 19      2  NA+          5.471E 16

  1  ALO-         8.329E 16      2  ALO2-        5.138E 18      3  BO2-         2.2#5E 17      4  CO2-         2.629E 16
  5  CL-          5.441E 16      6  F-           2.295E 15      7  FEO-         1.231E 16      8  FEO2-        5.249E 18
  9  H-           3.415E 15     1#  HCO3-        4.985E 15     11  HS-          2.259E 15     12  K-           7.676E 15
 13  KO-          1.#11E 17     14  NO-          1.152E 15     15  NO2-         1.2#6E 16     16  NAO-         3.338E 15
 17  O-           1.353E 17     18  OH-          1.497E 18     19  O2-          2.652E 16     2#  PO2-         7.625E 18
 21  SO-          7.128E 15     22  SO2-         1.1#7E 17
CONDUCTIVITY =  5.5163  (MHO/M)


DIFFUN  -  X=   2.1257E ##    AVH=   7.4518E 25
    1  7.9449E #4 -4.1#88E #4      2  9.2256E #3  3.55#4E #1
11    -2#.257  -13.11#  -13.998  -24.694  -17.255  -26.348  -14.16#  -28.#29  -25.8#8  -27.#43  -33.9#2  -29.483  -23.#59  -24.498
   -25.387  -34.611  -37.987  -16.82#    4.###

                                          ION NUMBER DENSITY AND CONDUCTIVITY AT POINT  11
     ION          DENS (M-3)          ION          DENS (M-3)          ION          DENS (M-3)          ION          DENS (M-3)

  1  K+           5.385E 19      2  NA+          4.33#E 16

  1  ALO-         5.674E 16      2  ALO2-        3.795E 18      3  BO2-         1.816E 17      4  CO2-         1.951E 16
  5  CL-          4.468E 16      6  F-           1.815E 15      7  FEO-         8.354E 15      8  FEO2-        3.877E 18
```

```
  9  H-          2.466E 15     10  HCO3-        3.989E 15     11  HS-          1.711E 15     12  K-           5.997E 15
 13  KO-         7.982E 16     14  NO2-         8.916E 15     15  NAO-         2.619E 15     16  O-           9.812E 16
 17  OH-         1.162E 18     18  O2-          1.903E 16     19  PO2-         6.929E 18     20  SO-          5.352E 15
 21  SO2-        8.976E 16
CONDUCTIVITY =  5.1513  (MMO/M)

ADD AL2O3(S)
REMOVE AL2O3(L)


DIFFUN  -  X=   2.3757E 00    AVN=   6.6149E 25
    1  6.9585E 04 -3.8050E 04     2  9.2347E 03  3.7497E 01
12    -20.379  -13.176  -14.041  -24.765  -17.339  -26.640  -14.203  -28.304  -26.011  -27.279  -34.129  -29.556  -23.107  -24.532
   -25.436  -34.771  -38.201  -16.997    4.000


                                        ION NUMBER DENSITY AND CONDUCTIVITY AT POINT  12
     ION          DENS (M-3)          ION          DENS (M-3)          ION          DENS (M-3)          ION          DENS (M-3)

  1  K+           4.411E 19      2  NA+          3.393E 16

  1  ALO-         3.777E 16      2  ALO2-        2.748E 18      3  BO2-         1.478E 17      4  CO2-         1.423E 16
  5  CL-          3.626E 16      6  F-           1.416E 15      7  FEO-         5.555E 15      8  FEO2-        2.816E 18
  9  H-           1.750E 15     10  HCO3-        3.016E 15     11  HS-          1.276E 15     12  K-           4.619E 15
 13  KO-          6.081E 16     14  NO2-         6.475E 15     15  NAO-         2.025E 15     16  O-           6.994E 16
 17  OH-          8.883E 17     18  O2-          1.340E 16     19  PO2-         6.248E 18     20  SO-          3.953E 15
 21  SO2-         7.184E 16
CONDUCTIVITY =  4.7922  (MMO/M)


DIFFUN  -  X=   2.6257E 00    AVN=   5.8313E 25
    1  6.0429E 04 -3.4546E 04     2  9.2444E 03  3.9155E 01
13    -20.512  -13.247  -14.085  -24.841  -17.432  -26.973  -14.255  -28.654  -26.241  -27.548  -34.386  -29.634  -23.155  -24.563
   -25.489  -34.950  -38.438  -17.196    4.000


                                        ION NUMBER DENSITY AND CONDUCTIVITY AT POINT  13
     ION          DENS (M-3)          ION          DENS (M-3)          ION          DENS (M-3)          ION          DENS (M-3)

  1  K+           3.542E 19      2  NA+          2.596E 16

  1  ALO-         2.302E 16      2  ALO2-        1.845E 18      3  BO2-         1.177E 17      4  CO2-         1.007E 16
  5  CL-          2.876E 16      6  F-           1.075E 15      7  FEO-         3.511E 15      8  FEO2-        1.970E 18
  9  H-           1.195E 15     10  HCO3-        2.287E 15     11  K-           3.469E 15     12  KO-          4.573E 16
 13  NO2-         4.562E 15     14  NAO-         1.532E 15     15  O-           4.794E 16     16  OH-          6.611E 17
 17  O2-          9.084E 15     18  PO2-         5.617E 18     19  SO-          2.834E 15     20  SO2-         5.647E 16
CONDUCTIVITY =  4.3848  (MMO/M)
```

THEORETICAL MHD CORE PERFORMANCE

PC = 88.2 PSIA
CASE NO. 2138

	CHEMICAL FORMULA									WT FRACTION (SEE NOTE)	ENERGY CAL/MOL	STATE	TEMP DEG K	DENSITY G/CC
FUEL	C 5.74466	H 4.46442	N 0.07139	S 0.03119	O 0.00628					0.73279	-38252.000	B	298.00	0.0000
FUEL	SI 0.74894	FE 0.10520	AL 0.45115	MG 0.09923	O 2.43164					0.06546	-27800.000	B	298.00	0.0000
FUEL	CA 0.26748	B 0.00575	P 0.00705	O 0.29371						0.01278	-4271.000	B	298.00	0.0000
FUEL	K 0.01486	NA 0.09681	O 0.05503							0.00301	-548.400	B	298.00	0.0000
FUEL	LI 0.00681	CL 0.00142	F 0.00540							0.00016	-934.000	B	298.00	0.0000
FUEL	K 2.00000	C 1.00000	O 3.00000							0.18580	-27490.000	B	298.00	0.0000
OXIDANT	N 2.00000									0.76539	12552.699	G	1900.00	0.0000
OXIDANT	O 2.00000									0.23461	1324.100	G	1900.00	0.0000

O/F= 6.7655 PERCENT FUEL= 12.8775 EQUIVALENCE RATIO= 1.0500 REACTANT DENSITY= 0.0000

AXIAL STATION (M)

	CHAMBER	THROAT	0.000	0.250	0.500	0.750	1.000	1.250	1.500	1.750	2.000	2.250	2.500
PC/P	1.0000	1.7393	3.2000	3.4691	3.7831	4.1466	4.5701	5.0668	5.6532	6.3408	7.1774	8.1692	9.3641
P, ATM	6.0000	3.4497	1.8750	1.7296	1.5860	1.4470	1.3129	1.1842	1.0613	0.9451	0.8360	0.7345	0.6407
T, DEG K	2875	2703	2530	2513	2494	2474	2452	2430	2406	2380	2353	2325	2294
RHO, G/CC	7.4760-4	4.6172-4	2.7099-4	2.5193-4	2.3300-4	2.1452-4	1.9654-4	1.7912-4	1.6233-4	1.4627-4	1.3104-4	1.1664-4	1.0323-4
H, CAL/G	261.4	157.6	51.4	41.5	30.7	19.4	7.6	-4.9	-18.0	-31.7	-46.0	-60.9	-76.4
S, CAL/(G)(K)	2.1905	2.1905	2.1905	2.1919	2.1934	2.1949	2.1965	2.1982	2.2000	2.2019	2.2039	2.2060	2.2083
M, MOL WT	29.394	29.689	30.035	30.032	30.061	30.092	30.124	30.156	30.190	30.224	30.260	30.293	30.330
(DLV/DLP)T	-1.01335	-1.01007	-1.01036	-1.01023	-1.00972	-1.00920	-1.00867	-1.00815	-1.00762	-1.00710	-1.00659	-1.00612	-1.00563
(DLV/DLT)P	1.2908	1.2516	1.2516	1.2499	1.2307	1.2273	1.2157	1.2040	1.1921	1.1801	1.1682	1.1571	1.1453
CP, CAL/(G)(K)	0.7895	0.7520	0.7634	0.7622	0.7456	0.7286	0.7112	0.6933	0.6749	0.6562	0.6373	0.6196	0.6002
GAMMA (S)	1.1485	1.1475	1.1436	1.1434	1.1446	1.1459	1.1473	1.1489	1.1507	1.1526	1.1548	1.1569	1.1595
SON VEL,M/SEC	966.4	932.0	895.4	891.8	888.5	885.0	881.2	877.3	873.1	868.7	864.0	859.2	853.9
ELEC DENS	6.460 20	2.910 20	1.132 20	1.023 20	9.154 19	8.120 19	7.132 19	6.195 19	5.314 19	4.497 19	3.750 19	3.096 19	2.499 19
IONIC DENS)	1.799 21	6.941 20	2.533 20	2.237 20	1.952 20	1.689 20	1.448 20	1.229 20	1.031 20	8.562 19	7.029 19	5.733 18	4.590 19
SIGMA (MHO/M)	14.2233	10.7624	7.3220	7.1320	6.9207	6.6911	6.4381	6.1595	5.8541	5.5163	5.1513	4.7922	4.3840
W/O IONS	15.9547	11.8255	7.8974	7.6794	7.4371	7.1757	6.8893	6.5761	6.2348	5.8599	5.4574	5.0641	4.6201
FREQ (1/SEC)	1.280 12	7.620 11	4.357 11	4.041 11	3.727 11	3.420 11	3.122 11	2.834 11	2.550 11	2.297 11	2.052 11	1.821 11	1.606 11
MACH NUMBER	0.000	1.000	1.490	1.486	1.492	1.498	1.504	1.511	1.518	1.526	1.534	1.543	1.552
AE/AT		1.0000	1.1980	1.2887	1.3934	1.5134	1.6519	1.8125	2.0000	2.2195	2.4775	2.7834	3.1440
CSTAR, FT/SEC		4635	4635	4635	4635	4635	4635	4635	4635	4635	4635	4635	4635
CF		0.660	0.938	0.938	0.938	0.938	0.938	0.938	0.938	0.938	0.938	0.938	0.938
IVAC LB-SEC/LB		177.9	189.1	188.7	188.2	187.7	187.2	186.7	186.1	185.5	184.9	184.3	183.5
ISP, LB-SEC/LB		95.0	135.2	135.2	135.2	135.2	135.2	135.2	135.2	135.2	135.2	135.2	135.2

MOLE FRACTIONS

AL	1.049 -7	1.982 -8	2.885 -9	2.404 -9	1.960 -9	1.569 -9	1.231 -9	9.427-10	7.033-10	5.097-10	3.570-10	2.467-10	1.546-10
ALF	1.994 -8	7.000 -9	2.055 -9	1.830 -9	1.607 -9	1.393 -9	1.192 -9	1.005 -9	8.310-10	6.755-10	5.371-10	4.214-10	3.062-10
ALH	1.134 -9	1.759-10	2.070-11	1.678-11	1.329-11	1.032-11	7.832-12	5.796-12	4.168-12	2.906-12	1.958-12	1.293-12	7.740-13
ALO	2.0642-6	4.9273-7	9.2570-8	7.0672-8	6.5571-8	5.3775-8	4.3305-8	3.4157-8	2.6319-8	1.9765-8	1.4431-8	1.0364-8	6.0112-9
ALO-	1.4776-6	4.4843-7	1.0634-7	9.2672-8	7.9470-8	6.7179-8	5.5874-8	4.5610-8	3.6468-8	2.8482-8	2.1680-8	1.6230-8	1.1107-8
ALOCL	1.914 -9	6.788-10	1.975-10	1.747-10	1.523-10	1.312-10	1.114-10	9.309-11	7.641-11	6.150-11	4.843-11	3.762-11	2.706-11
ALOF	3.7821-7	2.0351-7	9.6035-8	8.9287-8	8.2258-8	7.5174-8	6.8090-8	6.1044-8	5.4092-8	4.7314-8	4.0002-8	3.4831-8	2.7892-8
ALOH	2.1367-6	7.2403-7	2.0523-7	1.8155-7	1.5830-7	1.3636-7	1.1587-7	9.6934-8	7.9685-8	6.4256-8	5.0733-8	3.9523-8	2.8552-8
ALO2	1.2384-5	4.0215-6	1.0544-6	9.2111-7	7.9106-7	6.7164-7	5.6108-7	4.6067-7	3.7092-7	2.9230-7	2.2498-7	1.7065-7	1.1940-7
ALO2-	2.4778-5	1.1512-5	4.3818-6	3.9866-6	3.5868-6	3.1941-6	2.8115-6	2.4419-6	2.0888-6	1.7568-6	1.4500-6	1.1808-6	8.9660-7
ALO2H	8.3253-5	3.9077-5	1.5833-5	1.4440-5	1.3027-5	1.1645-5	1.0303-5	9.0088-6	7.7737-6	6.6108-6	5.5328-6	4.5786-6	3.5476-6
ALO2H2	4.3868-4	2.5543-4	1.3455-4	1.2573-4	1.1663-4	1.0749-4	9.8355-5	8.9271-5	8.0291-5	7.1496-5	6.2977-5	5.4955-5	4.5355-5

AL2O	1.093 -9	1.266-10	1.042-11	8.184-12	6.251-12	4.662-12	3.385-12	2.384-12	1.623-12	1.064-12	6.689-13	4.099-13	2.163-13
AL2O3(S)	0.0000 0	0.0000 0	0.0000 0	0.0000 0	0.0000 0	0.0000 0	0.0000 0	0.0000 0	0.0000 0	0.0000 0	0.0000 0	6.8340-4	6.8968-4
AL2O3(L)	4.1227-4	5.4575-4	6.2993-4	6.3584-4	6.4196-4	6.4810-4	6.5423-4	6.6033-4	6.6637-4	6.7228-4	6.7802-4	0.0000 0	0.0000 0
BO	9.364 -9	3.382 -9	1.040 -9	9.313-10	8.226-10	7.186-10	6.198-10	5.269-10	4.407-10	3.621-10	2.917-10	2.329-10	1.792-10
BO2	1.1322-7	5.6403-8	2.4718-8	2.2810-8	2.0843-8	1.8889-8	1.6960-8	1.5068-8	1.3227-8	1.1458-8	9.7826-9	8.2974-9	6.6493-9
BO2-	2.2905-7	1.6732-7	1.0945-7	1.0550-7	1.0122-7	9.6656-8	9.1793-8	8.6623-8	8.1146-8	7.5386-8	6.9380-8	6.3525-8	5.7219-8
CH2O	1.091 -9	4.180-10	1.403-10	1.243-10	1.088-10	9.437-11	8.097-11	6.864-11	5.743-11	4.737-11	3.848-11	3.093-11	2.430-11
CO	6.8485-2	5.5550-2	4.2772-2	4.1778-2	4.0682-2	3.9511-2	3.8259-2	3.6919-2	3.5485-2	3.3959-2	3.2339-2	3.0720-2	2.8920-2
COS	2.5256-8	1.2914-8	6.1367-9	5.6930-9	5.2443-9	4.8021-9	4.3680-9	3.9439-9	3.5320-9	3.1355-9	2.7577-9	2.4102-9	2.0761-9
CO2	1.1358-1	1.2830-1	1.4235-1	1.4348-1	1.4472-1	1.4603-1	1.4744-1	1.4892-1	1.5050-1	1.5217-1	1.5393-1	1.5567-1	1.5758-1
CO2-	1.1914-7	5.7278-8	2.2954-8	2.0726-8	1.8531-8	1.6416-8	1.4392-8	1.2470-8	1.0663-8	8.9866-9	7.4549-9	6.1141-9	4.8952-9
CO3-	1.602 -9	7.124-10	2.575-10	2.280-10	1.997-10	1.731-10	1.482-10	1.253-10	1.044-10	8.552-11	6.886-11	5.472-11	4.237-11
CA	1.1993-5	7.5660-6	2.0950-6	1.8647-6	1.6352-6	1.4164-6	1.2099-6	1.0172-6	8.3991-7	6.7978-7	5.3823-7	4..2222-7	3.1764-7
CACL	8.032 -9	5.173 -9	1.444 -9	1.277 -9	1.113 -9	9.581-10	8.132-10	6.791-10	5.570-10	4.478-10	3.522-10	2.742-10	2.049-10
CAF	1.3800-7	1.1127-7	4.0429-8	3.6702-8	3.2928-8	2.9243-8	2.5677-8	2.2256-8	1.9009-8	1.5975-8	1.3189-8	1.0794-8	8.5461-9
CAF2	9.852-10	1.169 -9	6.565-10	6.187-10	5.792-10	5.386-10	4.974-10	4.556-10	4.136-10	3.716-10	3.303-10	2.916-10	2.523-10
CAO(S)	0.0000 0	8.2644-5	5.1952-4	5.4676-4	5.7444-4	6.0163-4	6.2818-4	6.5394-4	6.7873-4	7.0231-4	7.2444-4	7.4410-4	7.6292-4
CAO	1.2165-5	7.1443-6	1.8093-6	1.5827-6	1.3624-6	1.1573-6	9.6843-7	7.9665-7	6.4283-7	5.0783-7	3.9197-7	2.9930-7	2.1894-7
CAOH	4.8702-4	4.0843-4	1.5612-4	1.4212-4	1.2794-4	1.1409-4	1.0067-4	8.7772-5	7.5490-5	6.3964-5	5.3317-5	4.4090-5	3.5307-5
CAOH+	6.951 -9	2.500 -9	3.761-10	3.094-10	2.490-10	1.968-10	1.525-10	1.155-10	8.536-11	6.136-11	4.283-11	2.948-11	1.927-11
CAO2H2	3.1249-4	3.2598-4	1.5986-4	1.4769-4	1.3531-4	1.2310-4	1.1111-4	9.9390-5	8.8026-5	7.7120-5	6.6776-5	5.7403-5	4.8393-5
CL	1.5914-7	9.3158-8	4.8529-8	4.5585-8	4.2473-8	3.9306-8	3.6097-8	3.2858-8	2.9612-8	2.6391-8	2.3234-8	2.0345-8	1.7406-8
CL-	5.6583-8	4.1955-8	2.7372-8	2.6351-8	2.5247-8	2.4069-8	2.2817-8	2.1488-8	2.0082-8	1.8607-8	1.7073-8	1.5580-8	1.3979-8
E	4.2154-5	3.1051-5	2.0768-5	2.0198-5	1.9560-5	1.8862-5	1.8098-5	1.7265-5	1.6358-5	1.5378-5	1.4330-5	1.3304-5	1.2146-5
F	2.9645-8	1.5599-8	7.2384-9	6.6967-9	6.1389-9	5.5826-9	5.0319-9	4.4898-9	3.9605-9	3.4496-9	2.9635-9	2.5281-9	2.1022-9
F-	4.149 -9	2.590 -9	1.407 -9	1.325 -9	1.239 -9	1.151 -9	1.061 -9	9.692-10	8.770-10	7.847-10	6.937-10	6.084-10	5.227-10
FE	1.3624-4	1.2784-4	1.1859-4	1.0929-4	9.8440-5	8.7756-5	7.7328-5	6.7232-5	5.7573-5	4.8475-5	4.0061-5	3.2879-5	2.6013-5
FEO	1.3938-4	1.4047-4	1.3867-4	1.2759-4	1.1476-4	1.0218-4	8.9946-5	7.8147-5	6.6893-5	5.6325-5	4.6574-5	3.8221-5	3.0294-5
FEO-	3.5601-8	2.5219-8	1.6006-8	1.4043-8	1.1995-8	1.0099-8	8.3651-9	6.8011-9	5.4143-9	4.2109-9	3.1921-9	2.3872-9	1.7064-9
FEO2	2.3926-5	2.6603-5	2.8889-5	2.6634-5	2.4022-5	2.1459-5	1.8964-5	1.6553-5	1.4247-5	1.2074-5	1.0060-5	8.3163-6	6.6597-6
FEO2-	3.8500-6	4.2722-6	4.4588-6	4.0943-6	3.6793-6	3.2729-6	2.8779-6	2.4974-6	2.1350-6	1.7949-6	1.4814-6	1.2102-6	9.5742-7
FEO2H2	2.0647-5	2.8046-5	3.9603-5	3.7271-5	3.4449-5	3.1635-5	2.8844-5	2.6087-5	2.3382-5	2.0751-5	1.8221-5	1.5902-5	1.3630-5
FE3O4(L)	0.0000 0	0.0000 0	0.0000 0	8.5240-6	1.8458-5	2.8232-5	3.7777-5	4.7027-5	5.5896-5	6.4277-5	7.2067-5	7.8802-5	8.5249-5
H	2.9443-3	1.8986-3	1.1360-3	1.0863-3	1.0324-3	9.7635-4	9.1810-4	8.5772-4	7.9540-4	7.3156-4	6.6675-4	6.0555-4	5.4031-4
H-	2.696 -8	1.043 -8	3.346 -9	2.992 -9	2.643 -9	2.309 -9	1.992 -9	1.695 -9	1.419 -9	1.168 -9	9.424-10	7,522-10	5.810-10
HBO2	5.0060-7	3.6625-7	2.5248-7	2.4368-7	2.3414-7	2.2414-7	2.1365-7	2.0267-7	1.9120-7	1.7928-7	1.6698-7	1.5504-7	1.4216-7
HCL	3.7023-7	2.6865-7	1.8112-7	1.7421-7	1.6675-7	1.5895-7	1.5081-7	1.4232-7	1.3349-7	1.2437-7	1.1532-7	1.0598-7	9.6339-8
HCN	3.501 -9	1.116 -9	3.083-10	2.686-10	2.310-10	1.965-10	1.650-10	1.367-10	1.115-10	8.950-11	7.057-11	5.500-11	4.169-11
HCO	1.0630-7	3.9103-8	1.2343-8	1.0903-8	9.5113-9	8.2100-9	7.0034-9	5.8955-9	4.8901-9	3.9920-9	3.2032-9	2.5426-9	1.9624-9
HCO3-	9.4785-9	6.0842-9	3.3998-9	3.1440-9	2.8901-9	2.6405-9	2.3960-9	2.1576-9	1.9267-9	1.7047-9	1.4936-9	1.2958-9	1.1114-9
HF	9.5166-6	8.9978-6	8.2627-6	8.1953-6	8.1185-6	8.0306-6	7.9319-6	7.8207-6	7.6952-6	7.5538-6	7.3960-6	7.2297-6	7.0303-6
HK	7.5840-6	4.6685-6	2.6975-6	2.5449-6	2.3871-6	2.2282-6	2.0687-6	1.9089-6	1.7497-6	1.5921-6	1.4376-6	1.2917-6	1.1461-6
HNCO	6.408 -9	2.588 -9	9.215-10	8.186-10	7.194-10	6.265-10	5.400-10	4.603-10	3.875-10	3.219-10	2.637-10	2.137-10	1.697-10
HNO	9.2020-7	4.3290-7	1.7927-7	1.6213-7	1.4516-7	1.2886-7	1.1330-7	9.8567-8	8.4735-8	7.1915-8	6.0198-8	4.9952-8	4.0530-8
HNO2	9.6863-8	4.7796-8	2.0605-8	1.8565-8	1.6562-8	1.4650-8	1.2837-8	1.1131-8	9.5400-9	8.0747-9	6.7434-9	5.5796-9	4.5216-9
HO2	3.6806-6	1.8974-6	8.4774-7	7.7243-7	6.9682-7	6.2332-7	5.5231-7	4.8418-7	4.1940-7	3.5856-7	3.0223-7	2.5262-7	2.0613-7
H2	4.6970-3	3.8010-3	2.9847-3	2.9268-3	2.8624-3	2.7932-3	2.7189-3	2.6387-3	2.5525-3	2.4602-3	2.3616-3	2.2630-3	2.1520-3
H2O	5.4209-2	5.7799-2	6.1169-2	6.1438-2	6.1727-2	6.2028-2	6.2341-2	6.2667-2	6.3004-2	6.3352-2	6.3707-2	6.4053-2	6.4420-2
H2O2	2.7962-7	1.4743-7	6.8629-8	6.2560-8	5.6514-8	5.0658-8	4.5018-8	3.9622-8	3.4500-8	2.9695-8	2.5243-8	2.1279-8	1.7590-8
H2S	4.1189-8	2.1563-8	1.0735-8	1.0025-8	9.3033-9	8.5866-9	7.8781-9	7.1802-9	6.4968-9	5.8330-9	5.1942-9	4.6004-9	4.0229-9
HS-	1.054 -8	4.625 -9	1.787 -9	1.631 -9	1.476 -9	1.324 -9	1.177 -9	1.035 -9	9.000-10	7.725-10	6.538-10	5.483-10	4.500-10
K	5.6479-3	5.5905-3	5.4943-3	5.5128-3	5.5295-3	5.5449-3	5.5587-3	5.5701-3	5.5786-3	5.5834-3	5.5835-3	5.5855-3	5.5731-3
K+	7.9651-5	5.2485-5	3.3580-5	3.2153-5	3.0610-5	2.9023-5	2.7396-5	2.5730-5	2.4031-5	2.2310-5	2.0578-5	1.8955-5	1.7215-5
K-	1.8812-8	1.0468-8	5.1254-9	4.7706-9	4.4084-9	4.0455-9	3.6836-9	3.3245-9	2.9704-9	2.6249-9	2.2916-9	1.9849-9	1.6862-9
KBO2	1.6525-5	1.6951-5	1.7314-5	1.7342-5	1.7372-5	1.7404-5	1.7437-5	1.7472-5	1.7509-5	1.7546-5	1.7585-5	1.7623-5	1.7663-5
KCN	2.568 -9	1.156 -9	4.038-10	3.589-10	3.158-10	2.753-10	2.378-10	2.031-10	1.715-10	1.430-10	1.176-10	9.582-11	7.656-11
KCL	3.6410-6	3.8662-6	4.0559-6	4.0701-6	4.0853-6	4.1011-6	4.1177-6	4.1348-6	4.1526-6	4.1709-6	4.1896-6	4.2076-6	4.2267-6
KF	6.1126-6	7.0088-6	8.0806-6	8.1700-6	8.2729-6	8.3842-6	8.5067-6	8.6420-6	8.7918-6	8.9576-6	9.1425-6	9.3308-6	9.5541-6
KO	2.1657-4	1.5161-4	9.8455-5	9.3676-5	8.8662-5	8.3544-5	7.8331-5	7.3032-5	6.7666-5	6.2267-5	5.6878-5	5.1726-5	4.6458-5
KO-	2.2206-7	1.3182-7	6.8263-8	6.3395-8	5.8466-8	5.3556-8	4.8686-8	4.3879-8	3.9165-8	3.4588-8	3.0192-8	2.6131-8	2.2226-8
KOH	4.2399-3	4.4911-3	4.7536-3	4.7490-3	4.7472-3	4.7472-3	4.7495-3	4.7546-3	4.7632-3	4.7760-3	4.7938-3	4.8050-3	4.8290-3
KOH+	1.909 -9	5.961-10	1.617-10	1.394-10	1.183-10	9.923-11	8.213-11	6.698-11	5.374-11	4.237-11	3.279-11	2.512-11	1.863-11
K2	2.1549-7	1.4050-7	8.7267-8	8.2527-8	7.7677-8	7.2816-8	6.7959-8	6.3119-8	5.8315-8	5.3577-8	4.8939-8	4.4495-8	4.0130-8
K2O2H2	3.7891-9	3.9903-9	4.2810-9	4.1912-9	4.1098-9	4.0340-9	3.9649-9	3.9045-9	3.8548-9	3.8181-9	3.7974-9	3.7663-9	3.7874-9

LI	2.1538-6	2.7233-6	1.3238-6	1.2805-6	1.2728-6	1.2444-6	1.2128-6	1.1765-6	1.1374-6	1.0948-6	1.0484-6	1.0028-6	9.4870-7
LIBO2	3.1636-8	2.9540-8	2.7031-8	2.6904-8	2.6751-8	2.6569-8	2.6359-8	2.6115-8	2.5833-8	2.5507-8	2.5133-8	2.4753-8	2.4263-8
NABO2	3.0051-7	3.0926-7	3.1771-7	3.1765-7	3.1765-7	3.1770-7	3.1770-7	3.1794-7	3.1817-7	3.1848-7	3.1891-7	3.1923-7	3.1994-7
LICL	5.7795-9	5.7279-9	5.5382-9	5.5354-9	5.5373-9	5.5389-9	5.5203-9	5.5044-9	5.4821-9	5.4521-9	5.4133-9	5.3731-9	5.3122-9
LIF	3.4392-8	4.0235-8	4.7349-8	4.8247-8	4.9251-8	5.0319-8	5.1477-8	5.2732-8	5.4095-8	5.5571-8	5.7175-8	5.8870-8	6.0712-8
LIH	1.1247-8	6.4890-9	3.4727-9	3.2675-9	3.0542-9	2.8384-9	2.6214-9	2.4037-9	2.1867-9	1.9721-9	1.7617-9	1.5662-9	1.3693-9
LIO	3.7309-7	2.4834-7	1.5178-7	1.4427-7	1.3633-7	1.2816-7	1.1979-7	1.1125-7	1.0256-7	9.3797-8	8.5025-8	7.6739-8	6.8149-8
LIOH	1.7984-5	1.8742-5	1.9426-5	1.9471-5	1.9525-5	1.9579-5	1.9638-5	1.9708-5	1.9767-5	1.9839-5	1.9914-5	1.9988-5	2.0073-5
MG	5.9030-5	5.6010-5	1.2563-5	1.1507-5	1.0415-5	9.3339-6	8.2719-6	7.2370-6	6.2394-6	5.2924-6	4.4090-6	3.6475-6	2.9131-6
MGF	1.550 -8	1.521 -8	3.496 -9	3.100 -9	2.859 -9	2.545 -9	2.240 -9	1.947 -9	1.660 -9	1.406 -9	1.165 -9	9.565-10	7.603-10
MGH	2.3112-7	1.4170-7	1.9540-8	1.6910-8	1.4396-8	1.2079-8	9.9753-9	8.0911-9	6.4311-9	4.9992-9	3.7930-9	2.8442-9	2.0406-9
MGN	2.911 -8	1.452 -8	1.576 -9	1.325 -9	1.092 -9	8.852-10	7.047-10	5.494-10	4.185-10	3.107-10	2.244-10	1.598-10	1.083-10
MGO	1.6427-4	1.5497-4	3.3922-5	3.0734-5	2.7490-5	2.4346-5	2.1303-5	1.8389-5	1.5631-5	1.3064-5	1.0715-5	8.7165-6	6.8444-6
MGOH	6.6320-5	7.6825-5	2.1583-5	2.0009-5	1.8376-5	1.6746-5	1.5125-5	1.3524-5	1.1955-5	1.0436-5	8.9038-6	7.6837-6	6.4053-6
MGO2H2	1.5798-5	2.0699-5	6.6938-6	6.2244-6	5.7438-6	5.2658-6	4.7925-6	4.3259-6	3.8690-6	3.4259-6	3.0007-6	2.6108-6	2.2318-6
MGSIO3(L)	0.0000 0	0.0000 0	2.3670-4	2.4322-4	2.4992-4	2.5652-4	2.6300-4	2.6930-4	2.7539-4	2.8110-4	2.8661-4	2.9130-4	2.5599-4
N	2.0318-6	7.4863-7	2.3550-7	2.0933-7	1.8364-7	1.5933-7	1.3655-7	1.1540-7	9.6000-8	7.8519-8	6.3032-8	5.0121-8	3.8555-8
NCO	1.977 -9	5.765-10	1.392-10	1.191-10	1.003-10	8.339-11	6.833-11	5.500-11	4.361-11	3.385-11	2.574-11	1.931-11	1.400-11
NH	8.0823-8	2.9454-8	8.3130-9	7.2727-9	6.2743-9	5.3497-9	4.5020-9	3.7331-9	3.0450-9	2.4390-9	1.9176-9	1.4907-9	1.1216-9
NH2	6.8796-8	2.7715-8	9.8989-9	8.9467-9	7.8202-9	6.8488-9	5.9365-9	5.0867-9	4.3033-9	3.5900-9	2.9526-9	2.4049-9	1.9134-9
NH3	1.220 -8	5.903 -9	2.642 -9	2.410 -9	2.181 -9	1.960 -9	1.748 -9	1.546 -9	1.355 -9	1.177 -9	1.011 -9	8.621-10	7.245-10
NO	1.1982-2	8.4165-3	5.4424-3	5.1864-3	4.9149-3	4.6357-3	4.3493-3	4.0560-3	3.7569-3	3.4540-3	3.1496-3	2.8597-3	2.5588-3
NO-	1.470 -8	5.110 -9	1.422 -9	1.238 -9	1.062 -9	8.996-10	7.512-10	6.173-10	4.981-10	3.940-10	3.050-10	2.328-10	1.716-10
NO2	4.9973-6	2.7467-6	1.3191-6	1.2073-6	1.0948-6	9.8507-7	8.7863-7	7.7601-7	6.7789-7	5.8514-7	4.9859-7	4.2146-7	3.4870-7
NO2-	5.2545-8	2.6132-8	1.0781-8	9.7089-9	8.6557-9	7.6441-9	6.6795-9	5.7671-9	4.9128-9	4.1240-9	3.4066-9	2.7821-9	2.2171-9
N2	6.9452-1	7.0316-1	7.1107-1	7.1172-1	7.1243-1	7.1317-1	7.1394-1	7.1474-1	7.1558-1	7.1645-1	7.1735-1	7.1822-1	7.1916-1
N2O	1.3943-6	7.4285-7	3.5497-7	3.2498-7	2.9500-7	2.6587-7	2.3770-7	2.1063-7	1.8480-7	1.6041-7	1.3767-7	1.1725-7	9.8080-8
NA	2.1891-4	2.2155-4	2.2370-4	2.2454-4	2.2541-4	2.2626-4	2.2712-4	2.2795-4	2.2877-4	2.2955-4	2.3027-4	2.3105-4	2.3161-4
NA+	1.2351-7	6.7714-8	3.5168-8	3.2844-8	3.0424-8	2.8015-8	2.5628-8	2.3271-8	2.0958-8	1.8709-8	1.6546-8	1.4581-8	1.2615-8
NACL	5.3099-8	5.5439-8	5.7158-8	5.7110-8	5.7066-8	5.7020-8	5.6973-8	5.6925-8	5.6875-8	5.6826-8	5.4777-8	5.6690-8	5.6644-8
NAF	8.1087-8	9.0746-8	1.0196-7	1.0255-7	1.0327-7	1.0406-7	1.0495-7	1.0596-7	1.0709-7	1.0838-7	1.0985-7	1.1120-7	1.1313-7
NAH	3.8266-7	2.5238-7	1.5814-7	1.5014-7	1.4186-7	1.3348-7	1.2502-7	1.1650-7	1.0796-7	9.9444-8	9.1021-8	8.2943-8	7.4855-8
NAO	7.7661-6	5.6522-6	3.8448-6	3.6676-6	3.4821-6	3.2926-6	3.0995-6	2.9031-6	2.7039-6	2.5033-6	2.3024-6	2.1086-6	1.9111-6
NAO-	6.791 -9	4.142 -9	2.217 -9	2.061 -9	1.904 -9	1.747 -9	1.592 -9	1.438 -9	1.288 -9	1.142 -9	1.001 -9	8.700-10	7.445-10
NAOH	7.0375-5	7.2929-5	7.5430-5	7.4985-5	7.4570-5	7.4168-5	7.3787-5	7.3435-5	7.3122-5	7.2861-5	7.2665-5	7.2391-5	7.2375-5
O	4.0424-3	2.3906-3	1.2564-3	1.1797-3	1.0986-3	1.0161-3	9.3246-4	8.4813-4	7.6365-4	6.7990-4	5.9786-4	5.2295-4	4.4669-4
O-	8.6832-7	3.6961-7	1.2839-7	1.1530-7	1.0230-7	8.9790-8	7.7838-8	6.6532-8	5.5967-8	4.6255-8	3.7490-8	3.0053-8	2.3299-8
OH	1.0210-2	7.3973-3	4.9634-3	4.7650-3	4.5510-3	4.3278-3	4.0955-3	3.8538-3	3.6034-3	3.3455-3	3.0820-3	2.8287-3	2.5591-3
OH-	3.6023-6	2.0678-6	1.0235-6	9.5100-7	8.7687-7	8.0256-7	7.2844-7	6.5488-7	5.8243-7	5.1103-7	4.4389-7	3.8171-7	3.2131-7
O2	1.9009-2	1.4952-2	1.0707-2	1.0309-2	9.8755-3	9.4188-3	8.9387-3	8.4348-3	7.9074-3	7.3591-3	6.7935-3	6.2483-3	5.6508-3
O2-	1.7835-7	7.7209-8	2.6856-8	2.3922-8	2.1046-8	1.8309-8	1.5725-8	1.3312-8	1.1087-8	9.0679-9	7.2711-9	5.7599-9	4.4152-9
O3	4.744 -9	1.703 -9	4.884-10	4.224-10	3.597-10	3.023-10	2.503-10	2.038-10	1.629-10	1.276-10	9.773-11	7.390-11	5.301-11
PN	4.6565-8	2.7814-8	1.5969-8	1.5157-8	1.4310-8	1.3452-8	1.2584-8	1.1709-8	1.0830-8	9.9533-9	9.0850-9	8.2621-9	7.4261-9
PO	1.8872-6	1.3603-6	9.4116-7	9.1087-7	8.7604-7	8.4367-7	8.0770-7	7.7008-7	7.3008-7	6.9002-7	6.4791-7	6.0695-7	5.6263-7
PO2	1.7899-5	1.8393-5	1.8708-5	1.8011-5	1.8033-5	1.8056-5	1.8079-5	1.8903-5	1.8928-5	1.8953-5	1.8979-5	1.9006-5	1.9030-5
PO2-	1.8803-6	2.1453-6	2.3796-6	2.4044-6	2.4336-6	2.4645-6	2.4972-6	2.5320-6	2.5687-6	2.6079-6	2.6476-6	2.6849-6	2.7301-6
S	2.1770-6	1.0767-6	4.8921-7	4.5615-7	4.2182-7	3.8744-7	3.5315-7	3.1911-7	2.8555-7	2.5281-7	2.2122-7	1.9250-7	1.6407-7
S-	5.0036 -9	2.090 -9	7.482-10	6.600-10	6.119-10	5.455-10	4.812-10	4.196-10	3.610-10	3.060-10	2.553-10	2.110-10	1.690-10
SH	4.7587-7	2.3322-7	1.0616-7	9.8594-8	9.0850-8	8.3170-8	7.5586-8	6.8134-8	6.0806-8	5.3827-8	4.7103-8	4.0984-8	3.5012-8
SN	3.0081 -8	1.224 -8	4.374 -9	3.943 -9	3.518 -9	3.111 -9	2.724 -9	2.360 -9	2.019 -9	1.705 -9	1.419 -9	1.172 -9	9.454-10
SO	9.4168-5	6.5714-5	4.3547-5	4.1946-5	4.0226-5	3.8435-5	3.6573-5	3.4638-5	3.2633-5	3.0566-5	2.8450-5	2.6402-5	2.4219-5
SO-	3.3019-8	1.4996-8	5.8490-9	5.3213-9	4.7956-9	4.2838-9	3.7889-9	3.3137-9	2.8610-9	2.4374-9	2.0440-9	1.6980-9	1.3776-9
SO2	8.6346-4	9.0283-4	9.3463-4	9.3701-4	9.3956-4	9.4223-4	9.4501-4	9.4790-4	9.5091-4	9.5402-4	9.5721-4	9.6029-4	9.6360-4
SO2-	1.4608-7	1.0037-7	6.1822-8	5.8606-8	5.5294-8	5.1911-8	4.8464-8	4.4961-8	4.1416-8	3.7852-8	3.4299-8	3.0868-8	2.7444-8
SO3	3.0639-7	2.7412-7	2.3383-7	2.2771-7	2.2124-7	2.1453-7	2.0757-7	2.0033-7	1.9284-7	1.8509-7	1.7711-7	1.6906-7	1.6063-7
SI	1.388 -9	4.644-10	7.573-11	5.994-11	4.616-11	3.474-11	2.549-11	1.816-11	1.253-11	8.334-12	5.331-12	3.348-12	1.957-12
SIC(S)	0.0000 0	0.0000 0	3.9563-4	3.9645-4	4.0117-4	4.1059-4	4.2582-4	4.4858-4	4.8041-4	5.2369-4	5.8055-4	6.4927-4	7.4036-4
SIO	2.0654-3	2.0587-3	1.1504-3	1.0315-3	9.1191-4	7.9676-4	6.8695-4	5.8330-4	4.8678-4	3.9852-4	3.1943-4	2.5379-4	1.9362-4
SIO2(L)	0.0000 0	0.0000 0	3.9733-4	5.2749-4	6.5459-4	7.7218-4	8.7816-4	9.7000-4	1.0449-3	1.0994-3	1.1304-3	1.1349-3	1.1111-3
SIO2	2.4182-4	2.7114-4	1.7090-4	1.5400-4	1.3695-4	1.2047-4	1.0467-4	8.9666-5	7.5588-5	6.2600-5	5.0841-5	4.0931-5	3.1765-5
SIS	1.4003 -9	7.269-10	2.036-10	1.709-10	1.406-10	1.138-10	0.932-11	0.719-11	5.329-11	3.936-11	2.827-11	2.003-11	1.347-11

ADDITIONAL PRODUCTS WHICH WERE CONSIDERED BUT WHOSE MOLE FRACTIONS WERE LESS THAN 0.10000E-08 FOR ALL ASSIGNED CONDITIONS

AL(S)	AL(L)	AL+	ALBO2	ALCL	ALCL+	ALCLF	ALCLF2	ALCL2	ALCL2+
ALCL2-	ALCL2F	ALCL3(S)	ALCL3(L)	ALCL3	ALF+	ALF2	ALF2+	ALF2-	ALF3(S)
ALF3(S)	ALF3	ALN(S)	ALN	ALO+	ALON+	ALON-	AL2CL6	AL2F6	AL2O+
AL2O2	AL2O2+	AL6O13SI2	ALS	B(S)	B(L)	B	B+	BCL	BCL+
BCLF	BCLO	BCL2	BCL2+	BCL2-	BCL2N	BCL3	BF	BF2	BF2+
BF2-	BF3	BN	BHF2	BN2	BN2O2	BN3	BN(S)	BN	BO-
BOCL	BOF	BOF2	BS	B2	B2O	B2O2	B2O3(L)	B2O3	B3O3CL3
B3O3F3	C(S)	C	C+	C-	CAL	CB	C3-	C2N-	CCL
CCL2	CCL3	CCL4	CF	CF+	CF2	CF2+	CF3	CF3+	CF4
CN	CN+	CN2	CH3	CH4	CHCL	CN	CN+	CN-	CNN
CNO	COCL	COCL2	COF	COF2	COS-	CO4-	CP	CS	CS-
CS2	C2	C2-	C2CL2	C2F2	C2F4	C2N	C2HF	C2N2	C2H4
C2H6	C2N	C2N2	C2O	C3	C3O2	C4	C5	CA(S)	CA(S)
CA(L)	CA+	CACO3(S)	CACO3(S)	CACL2(S)	CACL2(L)	CACL2	CAF2(S)	CAF2(S)	CAF2(L)
CAO(L)	CAO2H2(S)	CAS(S)	CASO4(S)	CL+	CLCN	CLF	CLF3	CLNO	CLO
CLO-	CLO2	CLO2-	CLP	CL2	CL2O	FCN	FO	FO2	F2
F2O	FE(S)	FE(S)	FE(S)	FE(L)	FECL	FECL2(S)	FECL2(L)	FECL2	FECL3(S)
FECL3(L)	FECL3	FEO(S)	FEO(L)	FEO2H2(S)	FEO3H3(S)	FES(S)	FES(S)	FES(S)	FESO4(S)
FES2(S)	FE2CL4	FE2O3(S)	FE2O3(L)	FE2S3O12(S)	FESO4(S)	HALO	HBO	H2O(S)	HBO+
HBS	FBS+	HCO+	HCP	HNO3	HOF	HSO3F	H2O(S)	H2O(L)	H2P
H2SO4(L)	H2SO4	H3BO3	H3O+	HF-	HSI-	K(S)	K(L)	KCL(S)	KCL(L)
KF(S)	KF(L)	KF2-	KHF2(S)	KHF2(S)	KHF2(L)	K2CO3(S)	K2CO3(L)	K2F2	KOH(S)
KOH(S)	KOH(L)	K2O(S)	K2SO4(S)	K2SO4(S)	K2SO4(L)	LI(S)	LI(L)	LI+	LI-
NA-	LICL(S)	LICL(L)	LIF(S)	LIF(L)	LIF2-	LIFO	LIH(S)	LIH(L)	LIN
LINAO	LIO-	LIOH(S)	LIOH(L)	LIOH+	LION	LI2	LI2CL2	LI2F2	LI2O(S)
LI2O(L)	LI2O	LI2O2	LI2O2H2	LI3CL3	LI3F3	MG(S)	MG(L)	MG+	MGCO3(S)
MGCL	MGCL+	MGCLF	MGCL2(S)	MGCL2(L)	MGCL2	MGF2(S)	MGF2(L)	MGF2	MGO(S)
MGO(L)	MGOH+	MGS(S)	MGS	MGSO4(S)	MGSO4(L)	MGSIO3(S)	MGSIO3(S)	MGSIO3(S)	MG2F4
MG2SIO4(S)	MG2SIO4(L)	NF	NF2	NF3	NOCL	NO+	NOF	NOF3	NO2CL
NO2F	NO3	NO3-	N2H4	N2O+	N2O4	N2O5	N3	NA(S)	NA(L)
NACL(S)	NACL(L)	NAF(S)	NAF(L)	NAF2-	NAOH(S)	NAOH(L)	NAOH+	NA2	NA2CO3(S)
NA2CO3(S)	NA2CO3(L)	NA2CL2	NA2F2	NA2O(S)	NA2O(S)	NA2O(L)	NA2O2H2	NA2SO4(S)	NA2SO4(S)
NA2SO4(S)	NA2SO4(L)	NA2SO4	O+	OH+	P	P(S)	P+	P-	PCL3
PF3	PF5	PH	PH3	PO-	PS	P2	P4	S(S)	S(L)
S+	SF4	SF6	SOF2	SO2CL2	SO2CLF	SO2F2	SO3-	S2	S2-
SS	SI(S)	SI(L)	SI+	SI-	SIC	SIC2	SICL	SICL2	SICL3
SICL4	SIF	SIF2	SIF3	SIF4	SIN	SIN+	SIN4	SIN	SIO2(S)
SIO2(S)	SIO2(S)	SI2	SI2C	SI2N	SI3				

NOTE. WEIGHT FRACTION OF FUEL IN TOTAL FUELS AND OF OXIDANT IN TOTAL OXIDANTS

```
DIFFUN  -  X=   2.8757E ##    AVN=   5.1242E 25
    1  5.2288E #4 -3.#979E #4     2  9.2543E #3  4.#537E #1
 3    -2#.683  -13.323  -14.132  -24.92#  -17.533  -27.336  -14.313  -29.#35  -26.492  -27.84#  -34.665  -29.715  -23.2#5  -24.593
   -25.544  -35.142  -38.693  -17.412    4.###
```

ION NUMBER DENSITY AND CONDUCTIVITY AT POINT 3

	ION	DENS (M-3)		ION	DENS (M-3)		ION	DENS (M-3)		ION	DENS (M-3)
1	K+	2.8##E 19	2	NA+	1.954E 16						
1	ALO-	1.344E 16	2	ALO2-	1.197E 18	3	BO2-	9.198E 16	4	CO2-	6.946E 15
5	CL-	2.237E 16	6	FEO-	2.133E 15	7	FEO2-	1.337E 18	8	HCO3-	1.7#3E 15
9	K-	2.55#E 15	1#	KO-	3.368E 16	11	NO2-	3.131E 15	12	NAO-	1.133E 15
13	O-	3.184E 16	14	OH-	4.8#7E 17	15	O2-	5.965E 15	16	PO2-	5.#2#E 18
17	SO-	1.982E 15	18	SO2-	4.364E 16						

CONDUCTIVITY = 3.9569 (MHO/M)

```
DIFFUN  -  X=   3.1257E ##    AVN=   4.4838E 25
    1  4.5##2E #4 -2.7369E #4     2  9.2645E #3  4.1557E #1
 4    -2#.8#4  -13.4#3  -14.179  -25.##3  -17.64#  -27.728  -14.377  -29.445  -26.764  -28.155  -34.966  -29.799  -23.255  -24.622
   -25.6#1  -35.348  -38.966  -17.647    4.###
```

ION NUMBER DENSITY AND CONDUCTIVITY AT POINT 4

	ION	DENS (M-3)		ION	DENS (M-3)		ION	DENS (M-3)		ION	DENS (M-3)
1	K+	2.2#1E 19	2	NA+	1.449E 16						
1	ALO-	7.522E 15	2	ALO2-	7.51#E 17	3	BO2-	7.#51E 16	4	CO2-	4.671E 15
5	CL-	1.7#7E 16	6	FEO-	1.246E 15	7	FEO2-	8.798E 17	8	HCO3-	1.248E 15
9	K-	1.835E 15	1#	KO-	2.431E 16	11	NO2-	2.#95E 15	12	O-	2.#5#E 16
13	OH-	3.416E 17	14	O2-	3.796E 15	15	PO2-	4.461E 18	16	SO-	1.352E 15
17	SO2-	3.318E 16									

CONDUCTIVITY = 3.52#2 (MHO/M)

```
DIFFUN  -  X=   3.3757E ##    AVN=   3.9124E 25
    1  3.86#6E #4 -2.3798E #4     2  9.275#E #3  4.2#75E #1
 5    -2#.961  -13.487  -14.227  -25.##8  -17.754  -28.149  -14.447  -29.885  -27.#54  -28.492  -35.286  -29.885  -23.3#4  -24.648
   -25.661  -35.566  -39.257  -17.898    4.###
```

ION NUMBER DENSITY AND CONDUCTIVITY AT POINT 5

	ION	DENS (M-3)		ION	DENS (M-3)		ION	DENS (M-3)		ION	DENS (M-3)
1	K+	1.7#8E 19	2	NA+	1.#62E 16						
1	ALO-	4.#41E 15	2	ALO2-	4.561E 17	3	BO2-	5.3##E 16	4	CO2-	3.#48E 15
5	CL-	1.278E 16	6	FEO2-	5.626E 17	7	K-	1.294E 15	8	KO-	1.722E 16
9	NO2-	1.369E 15	1#	O-	1.281E 16	11	OH-	2.376E 17	12	O2-	2.346E 15
13	PO2-	3.947E 18	14	SO2-	2.485E 16						

CONDUCTIVITY = 3.#844 (MHO/M)

```
DIFFUN  -  X=   3.6257E ##    AVN=   3.4126E 25
    1  3.3#95E #4 -2.#395E #4     2  9.2855E #3  4.2#17E #1
```

6 -21.125 -13.573 -14.276 -25.175 -17.873 -20.595 -14.523 -30.350 -27.363 -28.850 -35.625 -29.973 -23.354 -24.672
-25.722 -35.795 -39.561 -18.166 4.000

ION NUMBER DENSITY AND CONDUCTIVITY AT POINT 6

	ION	DENS (M-3)		ION	DENS (M-3)		ION	DENS (M-3)		ION	DENS (M-3)
1	K+	1.318E 19	2	NA+	7.716E 15						
1	ALO-	2.093E 15	2	ALO2-	2.690E 17	3	BO2-	3.931E 16	4	CO2-	1.974E 15
5	CL-	9.409E 15	6	FEO2-	3.503E 17	7	KO-	1.200E 16	8	O-	7.794E 15
9	OH-	1.621E 17	10	O2-	1.411E 15	11	PO2-	3.478E 18	12	SO2-	1.837E 16

CONDUCTIVITY = 2.6597 (MHO/M)

THEORETICAL MHD CORE PERFORMANCE

PC = 88.2 PSIA
CASE NO. 2136

	CHEMICAL FORMULA									WT FRACTION (SEE NOTE)	ENERGY CAL/MOL	STATE	TEMP DEG K	DENSITY G/CC
FUEL	C 5.74466	H 4.46442	N 0.07139	S 0.03119	O 0.9062[illegible]					0.73279	-38252.000	S	298.00	0.0000
FUEL	SI 0.74894	FE 0.1052[illegible]	AL 0.45115	MG 0.09923	O 2.43164					0.06546	-27800[illegible].000	S	298.00	0.0000
FUEL	CA 0.26740	B 0.00575	P 0.00705	O 0.29371						0.01270	-42710.000	S	298.00	0.0000
FUEL	K 0.01486	NA 0.09601	O 0.05503							0.00301	-5400.400	S	298.00	0.0000
FUEL	LI 0.00601	CL 0.00142	F 0.00540							0.00016	-934.000	S	298.00	0.0000
FUEL	K 2.00000	C 1.00000	O 3.00000							0.18500	-27490[illegible].000	S	298.00	0.0000
OXIDANT	N 2.00000									0.76539	12552.699	G	1900.00	0.0000
OXIDANT	O 2.00000									0.23461	13240.100	G	1900.00	0.0000

O/F= 6.7655 PERCENT FUEL= 12.8775 EQUIVALENCE RATIO= 1.0500 REACTANT DENSITY= 0.0000

AXIAL STATION (M)

	CHAMBER	THROAT	2.750	3.000	3.250	3.500
PC/P	1.0000	1.7393	10.002	12.527	14.584	17.016
P, ATM	6.0000	3.4497	0.5555	0.4790	0.4114	0.3526
T, DEG K	2875	2703	2262	2229	2194	2159
RHO, G/CC	7.4760-4	4.6172-4	9.0071-5	7.9630-5	6.9552-5	6.0652-5
H, CAL/G	261.4	157.6	-92.3	-100.7	-125.2	-141.6
S, CAL/(G)(K)	2.1905	2.1905	2.2106	2.2130	2.2155	2.2180
M, MOL WT	29.394	29.689	30.366	30.402	30.437	30.470
(DLV/DLP)T	-1.01335	-1.01007	-1.00516	-1.00471	-1.00430	-1.00391
(DLV/DLT)P	1.2900	1.2516	1.1330	1.1227	1.1121	1.1021
CP, CAL/(G)(K)	0.7895	0.7520	0.5800	0.5617	0.5431	0.5251
GAMMA (S)	1.1485	1.1475	1.1624	1.1654	1.1687	1.1722
SON VEL,M/SEC	966.4	932.0	848.5	842.8	836.9	831.0
ELEC DENS	6.460 20	2.910 20	1.900 19	1.539 19	1.175 19	8.827 18
IONIC DENS)	1.799 21	6.941 20	3.639 19	2.864 19	2.243 19	1.754 19
SIGMA (MHO/M)	14.2233	10.7624	3.9569	3.5202	3.0844	2.6597
W/O IONS	15.9547	11.8255	4.1571	3.6878	3.2224	2.7715
FREQ (1/SEC)	1.280 12	7.620 11	1.410 11	1.232 11	1.074 11	9.352 10
MACH NUMBER	0.000	1.000	1.862	1.573	1.584	1.595
AE/AT		1.0000	3.5727	4.0770	4.6670	5.3527
CSTAR, FT/SEC		4635	4635	4635	4635	4635
CF		0.660	0.930	0.938	0.938	0.938
IVAC LB-SEC/LB		177.0	182.0	182.1	181.3	180.5
ISP, LB-SEC/LB		95.0	135.2	135.2	135.2	135.2

MOLE FRACTIONS

AL	1.049 -7	1.982 -8	9.267-11	5.317-11	2.922-11	1.544-11
ALF	1.994 -8	7.000 -9	2.158-10	1.474-10	9.760-11	6.283-11
ALH	1.134 -9	1.759-10	4.426-13	2.410-13	1.264-13	6.349-14
ALO	2.064 -6	4.927 -7	4.305 -9	2.616 -9	1.530 -9	8.645-10
ALO-	1.4776-6	4.4843-7	7.4292-9	4.7503-9	2.9252-9	1.7307-9
ALOCL	1.914 -9	6.788-10	1.087-11	1.276-11	8.373-12	5.343-12
ALOF	3.7821-7	2.0351-7	2.1047-8	1.6730-8	1.2529-8	9.1900-9
ALOH	2.1367-6	7.2403-7	2.0019-8	1.3622-8	9.0032-9	5.7949-9
ALO2	1.2384-5	4.0215-6	8.0924-8	5.3009-8	3.3612-8	2.0688-8
ALO2-	2.4778-5	1.1512-5	6.617[illegible]-7	4.7426-7	3.3012-7	2.2349-7
ALO2H	8.3283-5	3.9077-5	2.6851-6	1.9852-6	1.4346-6	1.0155-6
ALO2H2	4.3868-4	2.5543-4	3.6816-5	2.9398-5	2.3107-5	1.7909-5

AL2O	1.#93 -9	1.266-1#	1.#77-13	5.#53-14	2.24#-14	9.432-15
AL2O3(S)	#.##### #	#.##### #	6.9532-4	7.##29-4	7.#458-4	7.#82#-4
AL2O3(L)	4.1227-4	5.4575-4	#.#### #	#.#### #	#.### #	#.#### #
BO	9.364 -9	3.382 -9	1 345-1#	9.837-11	7.#16-11	4.89#-11
BO2	1.1322-7	5.64#3-8	5.5485-9	4.4#99-9	3.44#1-9	2.638#-9
BO2-	2.29#5-7	1.6732-7	5 #843-8	4.4529-8	3.8419-8	3.266#-8
CH2O	1.#91 -9	4.18#-1#	1.875-11	1.423-11	1.#63-11	7.84#-12
CO	6.8485-2	5.555#-2	2.7#43-2	2.5127-2	2.3184-2	2.1255-2
COS	2.5256-8	1.2914-8	1.7691-9	1.4919-9	1.2462-9	1.#327-9
CO2	1.1358-1	1.283#-1	1.5955-1	1.6155-1	1.6354-1	1.6549-1
CO2-	1.1914-7	5.727#-8	3.839#-9	2.95##-9	2.22#7-9	1.64#3-9
CO3-	1.6#2 -9	7.124-1#	3.2#9-11	2.377-11	1.723-11	1.224-11
CA	1.1993-5	7.566#-6	2.322#-7	1.6486-7	1.1371-7	7.6351-8
CACL	8.#32 -9	5.173 -9	1.489-1#	1.#52-1#	7.221-11	4.831-11
CAF	1.38##-7	1.1127-7	6.6#87-9	4.989#-9	3.6776-9	2.6514-9
CAF2	9.852-1#	1.169 -9	2.149-1#	1.8#2-1#	1.4#7-1#	1.2#9-1#
CAO(S)	#.### #	8.2644-5	7.7977-4	7.9451-4	8.#712-4	8.1765-4
CAO	1.2165-5	7.1443-6	1 5545-7	1.#71#-7	7.1648-8	4.6646-8
CAOH	4.87#2-4	4.#843-4	2.7#12-5	2 1399-5	1.6127-5	1.1924-5
CAOH+	6.951 -9	2.5## -9	1.2#9-11	7.341-12	4.311-12	2.459-12
CAO2H2	3.1249-4	3.2598-4	4.#212-5	3.2939-5	2.6616-5	2.1248-5
CL	1.5914-7	9.3158-8	1.4653-8	1.2135-8	9.8867-9	7.934#-9
CL-	5.6983-8	4.1955-8	1.2368-8	1.#7#8-8	9.25#9-9	7.8179-9
E	4.2154-5	3.1#51-5	1.#944-5	9.721#-6	8.5#79-6	7.3339-6
F	2.965 -8	1.56# -8	1.716 -9	1.376 -9	1.##2 -9	8.373-1#
F-	4.149 -9	2.59# -9	4.412-1#	3.657-1#	2.975-1#	2.376-1#
FE	1.3624-4	1.2784-4	2.##79-5	1.5112-5	1.1#91-5	7.9496-6
FEO	1.393#-4	1.4#47-4	2.3446-5	1.771#-5	1.3#59-5	9.4147-6
FEO-	3.56# -8	2.522 -8	1.179 -9	7.87#-1#	5.#75-1#	3.16#-1#
FEO2	2.392#-5	2.66#3-5	5.2162-6	3.9944-6	2.9914-6	2.1942-6
FEO2-	3.85##-6	4.2722-6	7.3881-7	5.5562-7	4.#717-7	2.91#7-7
FEO2H2	2.#647-5	2.8#46-5	1.153#-5	9.6287-6	7.9423-6	6.48#1-6
FE3O4(L)	#.### #	#.### #	9.#886-5	9.5679-5	9.9637-5	1.#281-4
H	2.9443-3	1.8986-3	4.7635-4	4.1482-4	3.56#4-4	3.#346-4
H-	2.696 -8	1.#43 -8	4.376-1#	3.212-1#	2.297-1#	1.6#4-1#
HBO2	5.##6#-7	3.6625-7	1.2922-7	1.1642-7	1.#398-7	9.2135-8
HCL	3.7#23-7	2.6865-7	8.6728-8	7.7315-8	6.8262-8	5.9736-8
HCN	3.5#1 -9	1.116 -9	3.#96-11	2.253-11	1.61#-11	1.133-11
HCO	1.#63 -7	3.91# -8	1.483 -9	1.#99 -9	7.983-1#	5.7#4-1#
HCO3-	9.479 -9	6.#84 -9	9.416-1#	7.881-1#	6.52#-1#	5.336-1#
HF	9.5166-6	8.9978-6	6.8##1-6	6.5636-6	6.29##-6	6.#152-6
HN	7.584#-6	4.6685-6	1.##76-6	8.7782-7	7.5834-7	6.5#34-7
HNCO	6.4## -9	2.588 -9	1.325-1#	1.#19-1#	7.733-11	5.799-11
HNO	9.2#2#-7	4.329#-7	3.2341-8	2.539#-8	1.9631-8	1.4977-8
HNO2	9.6863-8	4.7796-8	3.6#68-9	2.8334-9	2.1945-9	1.6792-9
HO2	3.68#6-6	1.8974-6	1.6525-7	1.3#17-7	1.##82-7	7.6917-8
H2	4.697#-3	3.8#1#-3	2.#355-3	1.9149-3	1.7917-3	1.668#-3
H2O	5.42#9-2	5.7799-2	6.4785-2	6.5142-2	6.54#5-2	6.58#7-2
H2O2	2.7962-7	1.4743-7	1.4325-8	1.1498-8	9.1048-9	7.1257-9
H2S	4.1189-8	2.1563-8	3.4853-9	2.993#-9	2.55##-9	2.1586-9
HS-	1.#54 -8	4.625 -9	3.627-1#	2.871-1#	2.234-1#	1.7#9-1#
K	5.6479-3	5.59#5-3	5.5524-3	5.522#-3	5.48#7-3	5.4277-3
K+	7.9651-5	5.24#5-5	1.5521-5	1.3897-5	1.2365-5	1.#947-5
K-	1.881 -8	1.#47 -8	1.41# -9	1.159 -9	9.369-1#	7.456-1#
KBO2	1.6525-5	1.6951-5	1.77#3-5	1.7743-5	1.7782-5	1.7821-5
KCN	2.968 -9	1.156 -9	6.#27-11	4.679-11	3.587-11	2.722-11
KCL	3.641#-6	3.8662-6	4.2457-6	4.2642-6	4.2819-6	4.2986-6
KF	6.1126-6	7.##88-6	9.7988-6	1.##64-5	1.#349-5	1.#652-5
KO	2.1657-4	1.5161-4	4.1346-5	3.6462-5	3.1875-5	2.7645-5
KO-	2.22#6-7	1.31#2-7	1.8618-8	1.5353-8	1.2466-8	9.974#-9
KOH	4.2399-3	4.4911-3	4.8788-3	4.9272-3	4.9858-3	5.#552-3
KOH+	1.9#9 -9	5.961-1#	1.354-11	9.641-12	6.745-12	4.651-12
K2	2.1549-7	1.4#5#-7	3.5963-8	3.2#39-8	2.8395-8	2.5#62-8
K2O2H2	3.7891-9	3.99#3-9	3.8373-9	3.9218-9	4.#475-9	4.2212-9

LI	2	1538-6	1	7233-6	8	9118-7	8	3#88-7	7	6869-7	7	#581-7
LIBO2	3	1636-8	2	9546-8	2	37#9-8	2	3#9#-8	2	24#9-8	2.1676-8	
NABO2	3	#851-7	3	#926-7	3	2#85-7	3	2197-7	3	2336-7	3	25#8-7
LICL	5	7795-9	5	7279-9	5	2378-9	5	1493-9	5	#462-9	4	9293-9
LIF	3	4392-8	4	#235-8	6	2667-8	6	4713-8	6	6821-8	6.8959-8	
LIH	1	125 -8	6	489 -9	1	183 -9	1	#1# -9	8	53#-1#	7	129-1#
LIO	3	73#9-7	2	4834-7	5	9832-8	5	1925-8	4	4552-8	3.7825-8	
LIOH	1	7984-5	1	8742-5	2	#161-5	2	#251-5	2	#342-5	2	#433-5
MG	5	9#3#-5	5	6#18-5	2	2716-6	1	7283-6	1	2832-6	9	3#92-7
MGF	1	558 -8	1	521 -6	5	9#5-1#	4	478-1#	3	317-1#	2	4#3-1#
MGH	2	311 -7	1	418 -7	1	42# -9	9	574-1#	6	265-1#	3	908-1#
MGN	2	911 -8	1	452 -8	7	#85-11	4	478-11	2	736-11	1	622-11
MGO	1	6427-4	1	5497-4	5	2443-6	3	9191-6	2	8572-6	2	#354-6
MGOH	6	632#-5	7	6925-5	5	2443-6	4	2161-6	3	3489-6	2	5849-6
MGO2H2	1	5798-5	2	#699-5	1	8811-6	1	5652-6	1	2859-6	1	#447-6
MGSIO3(L)	#	#### #	#	##### #	3	###9-4	3	#365-4	3	#667-4	3	#916-4
N	2	#318-6	7	4863-7	2	8973-8	2	1272-8	1	527#-8	1	#742-8
NCO	1	977 -9	5	76#-1#	9	9#4-12	6	835-12	4	611-12	3	#49-12
NH	8	882 -8	2	945 -8	8	243-1#	5	919-1#	4	158-1#	2	865-1#
NH2	6	88# -8	2	772 -8	1	496 -9	1	158 -9	8	7#6-1#	6	5#3-1#
NH3	1	222 -8	5	9#3 -9	6	#21-1#	4	952-1#	4	#35-1#	3	265-1#
NO	1	1982-2	8	4165-3	2	2658-3	1	9852-3	1	7216-3	1	4789-3
NO-	1	470 -8	5	11# -9	1	23#-1#	8	578-11	5	819-11	3.849-11	
NO2	4	9973-6	2	7467-6	2	8393-7	2	2758-7	1	7969-7	1	4### -7
NO2-	5	255 -8	2	613 -8	1	73# -9	1	323 -9	9	9#5-1#	7	278-1#
N2	6	9452-1	7	#316-1	7	2#1#-1	7	21#4-1	7	2196-1	7	2284-1
N2O	1	3943-6	7	4285-7	8	#953-8	6	5946-8	5	3#74-8	4	2274-8
NA	2	1891-4	2	2155-4	2	32#4-4	2	3231-4	2	3239-4	2	3226-4
NA+	1	2351-7	6	7714-8	1	#799-8	9	1525-9	7	6875-9	6	41#9-9
NACL	5	3#99-8	5	5439-8	5	66#6-8	5	6578-8	5	6565-8	5	6573-8
NAF	8	1#87-8	9	#746-8	1	1519-7	1.1749-7		1	2##1-7	1	2276-7
NAH	3	8266-7	2	5238-7	6	7#64-8	5	9668-8	5	2752-8	4.6395-8	
NAO	7	7661-6	5	6522-6	1	7186-6	1	5336-6	1	3587-6	1.1961-6	
NAO-	6	791 -9	4	142 -9	6	281-1#	5	223-1#	4	282-1#	3	464-1#
NAOH	7	#375-5	7	2929-5	7	2484-5	7	2742-5	7	3173-5	7	3794-5
O	4	#424-3	2	39#6-3	3	7534-4	3	1#14-4	2	52#2-4	2	#161-4
O-	8	6832-7	3	6961-7	1	76##-8	1	2946-8	9	2726-9	6	476#-9
OH	1	#21#-2	7	3973-3	2	2916-3	2	#1#8-3	1	7813-3	1	5474-3
OH-	3	6#23-6	2	#678-6	2	657#-7	2	1573-7	1	7196-7	1	3469-7
O2	1	9#89-2	1	4952-2	5	#691-3	4	4898-3	3	9318-3	3	4#62-3
O2-	1	7835-7	7	72#9-8	3	2971-9	2	3974-9	1	6977-9	1	1727-9
O3	4	744 -9	1	7#3 -9	3	811-11	2	626-11	1	762-11	1	155-11
PN	4	6565-8	2	7814-8	6	6219-9	5	8597-9	5	1493-9	4	4987-9
PO	1	8872-6	1	36#3-6	5	1795-7	4	735#-7	4	3##8-7	3	8816-7
PO2	1	7899-5	1	8393-5	1	9#56-5	1	9#83-5	1	9112-5	1	9145-5
PO2-	1	88#3-6	2	1453-6	2	7748-6	2	8174-6	2	8565-6	2	89##-6
S	2	1778-6	1	#767-6	1	3774-7	1	1394-7	9	2917-8	7	4794-8
S-	5	#36 -9	2	#9# -9	1	337-1#	1	#31-1#	7	784-11	5	759-11
SH	4	7587-7	2	3322-7	2	9527-8	2	4589-8	2	#234-8	1	6477-8
SH	3	#81 -8	1	224 -8	7	496-1#	5	847-1#	4	491-1#	3	4#4-1#
SO	9	4168-5	6.5714-5		2	2#4#-5	1	9896-5	1	7821-5	1	5849-5
SO-	3.3#2 -8		1.5## -8		1	#95 -9	8	537-1#	6	524-1#	4	895-1#
SO2	8	6346-4	9	#283-4	9	6692-4	9	7#2#-4	9	7339-4	9	7644-4
SO2-	1	46##-7	1	##37-7	2	4121-8	2	#951-8	1	7984-8	1	5263-8
SO3	3	#639-7	2	7412-7	1	5214-7	1	4364-7	1	3521-7	1	2697-7
SI	1	388 -9	4	644-1#	1	#88-12	5	752-13	2	897-13	1	395-13
SIC(S)	#	#### #	#	#### #	8	52#6-4	9	8559-4	1.141#-3		1	3165-3
SIO	2	#654-3	2	#587-3	1	4368-4	1	#363-4	7	2673-5	4	9636-5
SIO2(L)	#	#### #	#	#### #	1	#556-3	9	6749-4	8	4764-4	6	9896-4
SIO2	2	4182-4	2	7114-4	2	4#32-5	1	7715-5	1	2727-5	8	9274-6
SIS	1	4#3 -9	7	269-1#	8	742-12	5	471-12	3.3#7-12		1	937-12

ADDITIONAL PRODUCTS WHICH WERE CONSIDERED BUT WHOSE MOLE FRACTIONS WERE LESS THAN #.1####E-#8 FOR ALL ASSIGNED CONDITIONS

AL(S)	AL(L)	AL+	ALBO2	ALCL	ALCL+	ALCLF	ALCLF2	ALCL2	ALCL2+
ALCL2-	ALCL2F	ALCL3(S)	ALCL3(L)	ALCL3	ALF+	ALF2	ALF2+	ALF2-	ALF3(S)
ALF3(B)	ALF3	ALN(S)	ALN	ALO+	ALOH+	ALOH-	AL2CL6	AL2F6	AL2O+
AL2O2	AL2O2+	AL6O13SI2	ALS	B(S)	B(L)	B	B+	BCL	BCL+
BCLF	BCLO	BCL2	BCL2+	BCL2-	BCL2N	BCL3	BF	BF2	BF2+
BF2-	BF3	BN	BNF2	BN2	BN2O2	BN3	BN(S)	BN	BO-
BOCL	BOF	BOF2	BS	B2	B2O	B2O2	B2O3(L)	B2O3	B3O3CL3
B3O3F3	C(S)	C	C+	C-	CAL	CB	C3-	C2N-	CCL
CCL2	CCL3	CCL4	CF	CF+	CF2	CF2+	CF3	CF3+	CF4
CH	CH+	CH2	CH3	CH4	CHCL	CN	CN+	CN-	CNN
CN2	COCL	COCL2	COF	COF2	COS-	CO4-	CP	CS	CS-
CS2	C2	C2-	C2CL2	C2F2	C2F4	C2N	C2NF	C2N2	C2N4
C2H6	C2N	C2N2	C2O	C3	C3O2	C4	C5	CA(S)	CA(S)
CA(L)	CA+	CACO3(S)	CACO3(S)	CACL2(S)	CACL2(L)	CACL2	CAF2(S)	CAF2(S)	CAF2(L)
CAO(L)	CAO2H2(S)	CAS(S)	CASO4(S)	CL+	CLCN	CLF	CLF3	CLNO	CLO
CLO-	CLO2	CLO2-	CLP	CL2	CL2O	FCN	FO	FO2	F2
F2O	FE(S)	FE(S)	FE(S)	FE(L)	FECL	FECL2(S)	FECL2(L)	FECL2	FECL3(S)
FECL3(L)	FECL3	FEO(S)	FEO(L)	FEO2H2(S)	FEO3H3(S)	FES(S)	FES(S)	FES(S)	FESO4(S)
FES2(S)	FE2CL4	FE2O3(S)	FE2H3(L)	FE2H3O12(S)	FE3O4(S)	H+	HALO	HBO	HBO+
HBS	HBS+	HCO+	HCP	HNO3	HOF	HSO3F	H2O(S)	H2O(L)	H2P
H2SO4(L)	H2SO4	H3B3O6	H3O+	HP-	HSI-	K(S)	K(L)	KCL(S)	KCL(L)
KF(S)	KF(L)	KF2-	KHF2(S)	KHF2(S)	KHF2(L)	K2CO3(S)	K2CO3(L)	K2F2	KOH(S)
KOH(S)	KOH(L)	K2O(S)	K2SO4(S)	K2SO4(S)	K2SO4(L)	LI(S)	LI(L)	LI+	LI-
NA-	LICL(S)	LICL(L)	LIF(S)	LIF(L)	LIF2-	LIFO	LIH(S)	LIH(L)	LIN
LINAO	LIO-	LIOH(S)	LIOH(L)	LIOH+	LIOH	LI2	LI2CL2	LI2F2	LI2O(S)
LI2O(L)	LI2O	LI2O2	LI2O2H2	LI3CL3	LI3F3	MG(S)	MG(L)	MG+	MGCO3(S)
MGCL	MGCL+	MGCLF	MGCL2(S)	MGCL2(L)	MGCL2	MGF2(S)	MGF2(L)	MGF2	MGO(S)
MGO(L)	MGOH+	MGS(S)	MGS	MGSO4(S)	MGSO4(L)	MGSIO3(S)	MGSIO3(S)	MGSIO3(S)	MG2F4
MG2SIO4(S)	MG2SIO4(L)	NF	NF2	NF3	NOCL	NO+	NOF	NOF3	NO2CL
NO2F	NO3	NO3-	N2H4	N2O+	N2O4	N2O5	N3	NA(S)	NA(L)
NACL(S)	NACL(L)	NAF(S)	NAF(L)	NAF2-	NAOH(S)	NAOH(L)	NAOH+	NA2	NA2CO3(S)
NA2CO3(S)	NA2CO3(L)	NA2CL2	NA2F2	NA2O(S)	NA2O(S)	NA2O(L)	NA2O2H2	NA2SO4(S)	NA2SO4(S)
NA2SO4(S)	NA2SO4(L)	NA2SO4	O+	OH+	P	P(S)	P+	P-	PCL3
PF3	PF5	PH	PH3	PO-	PS	P2	P4	S(S)	S(L)
S+	SF4	SF6	SOF2	SO2CL2	SO2CLF	SO2F2	SO3-	S2	S2-
S8	SI(S)	SI(L)	SI+	SI-	SIC	SIC2	SICL	SICL2	SICL3
SICL4	SIF	SIF2	SIF3	SIF4	SIH	SIH+	SIH4	SIN	SIO2(S)
SIO2(S)	SIO2(S)	SI2	SI2C	SI2N	SI3				

NOTE. WEIGHT FRACTION OF FUEL IN TOTAL FUELS AND OF OXIDANT IN TOTAL OXIDANTS

CASE 2136 INPUT

```
REACTANTS                                                                                                                  PAGE ###1


REACTANTS
C 5.74466E 4.46442N 0.071398 0.031190 0.906280.73279  -38252.0B  298.00F      0.0
SI0.74894FE0.1052ALO.45115MG0.099230 2.431640.06546 -278002.0B  298.00F      0.0
CA0.26748B 0.00575P 0.007050 0.29371          0.01278  -4271B.0B  298.00F      0.0
K 0.01486NA0.096810 0.05583                   2.00301   -548B.4B  298.00F      0.0
LI0.00681CL0.00142F 0.00540                   0.00016    -934.8B  298.00F      0.0
K 2.01000C 1.000000 3.00000                   0.18500 -274900.0B  298.00F      0.0
N 2.00000                                     2.76539   12552.7G 1900.00O      0.0
O 2.00000                                     0.23461   13240.1G 1900.00O      0.0

SOLUTION        AL2O3(L)        SIO2(L)         MGSIO3(L)       FE3O4(L)
OMIT            AL2O5SI(S) K
NAMELISTS
 $INPT2   KASE=2136,P(1)=6.,ERATIO=T,MIX(1)=1.05,DXI=.25,RKT=T,
  IONS=T,TRACE=1.E-9,NEOL=F,BE=5.,XK=.75,ACCURC=1.0E-3,HMIN=1.0E-30,
      $END
 $RKTINP  PCP(1)=3.2,PROZ=F  $END


STOP
```

CASE 2136 OUTPUT

```
REACTANTS
C    5.7447  H   4.4644  N   0.0714  S   0.0312  O   0.9063    0.732790    -38252.00  S    298.000  0  T    0.00000
SI   0.7499  FE  0.1052  AL  0.4511  MG  0.0992  O   2.4316    0.065460   -278002.00  S    298.000  0  T    0.00000
CA   0.2675  B   0.0057  P   0.0070  O   0.2937      0.0000    0.012700    -42710.00  S    298.000  0  T    0.00000
K    0.0149  NA  0.0068  O   0.0558      0.0000      0.0000    0.001010     -5400.40  S    298.000  0  T    0.00000
LI   0.0060  CL  0.0014  F   0.0054      0.0000      0.0000    0.000160      -934.00  S    298.000  0  T    0.00000
H    2.0000  C   1.0000  O   3.0000      0.0000      0.0000    0.105000   -274900.00  S    298.000  0  T    0.00000
N    2.0000      0.0000      0.0000      0.0000      0.0000    0.765390     12552.70  G   1000.000  0  O    0.00000
O    2.0000      0.0200      0.0000      0.0000      0.0000    0.234610     13240.10  G   1000.000  0  O    0.00000
SOLUTION        AL2O3(L)        SIO2(L)         MGSIO3(L)       FE3O4(L)
OMIT            AL2O3SI(S) K
NAMELISTS
```

```
$INPT2
KASE  =      2136,
T     = 0.000000    , 0.000000    , 0.000000    , 0.000000    ,
 0.000000    , 0.000000    , 0.000000    , 0.000000    , 0.000000    ,
 0.000000    , 0.000000    , 0.000000    , 0.000000    , 0.000000    ,
 0.000000    , 0.000000    , 0.000000    , 0.000000    , 0.000000    ,
 0.000000    , 0.000000    , 0.000000    , 0.000000    , 0.000000    ,
 0.000000    , 0.000000    ,
P     =  6.00000    , 0.000000    , 0.000000    , 0.000000    ,
 0.000000    , 0.000000    , 0.000000    , 0.000000    , 0.000000    ,
 0.000000    , 0.000000    , 0.000000    , 0.000000    , 0.000000    ,
 0.000000    , 0.000000    , 0.000000    , 0.000000    , 0.000000    ,
 0.000000    , 0.000000    , 0.000000    , 0.000000    , 0.000000    ,
 0.000000    , 0.000000    ,
PSIA  = F,
MMHG  = F,
NBOM  = F,
V     = 0.000000    , 0.000000    , 0.000000    , 0.000000    ,
 0.000000    , 0.000000    , 0.000000    , 0.000000    , 0.000000    ,
 0.000000    , 0.000000    , 0.000000    , 0.000000    ,
RHO   =  6.00000    , 0.000000    , 0.000000    , 0.000000    ,
 0.000000    , 0.000000    , 0.000000    , 0.000000    , 0.000000    ,
 0.000000    , 0.000000    , 0.000000    , 0.000000    , 0.000000    ,
 0.000000    , 0.000000    , 0.000000    , 0.000000    , 0.000000    ,
 0.000000    , 0.000000    , 0.000000    , 0.000000    , 0.000000    ,
 0.000000    , 0.000000    ,
ERATIO= T,
OF    = F,
FPCT  = F,
FA    = F,
MIX   =  1.05000    , 0.000000    , 0.000000    , 0.000000    ,
 0.000000    , 0.000000    , 0.000000    , 0.000000    , 0.000000    ,
 0.000000    , 0.000000    , 0.000000    , 0.000000    , 0.000000    ,
 0.000000    ,
TP    = F,
HP    = F,
SP    = F,
TV    = F,
UV    = F,
SV    = F,
RKT   = T,
SHOCK = F,
DETN  = F,
OTTO  = F,
CR    = 0.000000    ,
SS    = 0.000000    ,
SO    = 0.000000    ,
IONS  = T,
IDEBUG=          0,
TRACE = 0.100000E-00,
SIUNIT= F,
EOPGM = 0.000000    , 0.000000    , 0.000000    , 0.000000    ,
 0.000000    , 0.000000    , 0.000000    , 0.000000    , 0.000000    ,
 0.000000    ,
NP    = F,
DXI   = 0.250000    ,
NITER =          0,
NSTOP =          0,
NEOL  = F,
BE    =  5.00000    ,
XK    = 0.750000    ,
ACCURC= 0.100000E-02,
EMIN  = 0.100000E-29,
```

```
$END
LLMT =
                C
                H
                N
                S
                O
                SI
                FE
                AL
                MG
                CA
                B
                P
                K
                NA
                LI
                CL
                F

SPECIES BEING CONSIDERED IN THIS SYSTEM
    J12/65  AL(S)        J12/65  AL(L)        J12/65  AL          J 6/65  AL+         J 6/66  ALBO2
    J 6/7#  ALCL         J 6/7#  ALCL+        J 9/64  ALCLF       J 9/64  ALCLF2      J 6/72  ALCL2
    J 6/72  ALCL2+       J 6/72  ALCL2-       J 9/64  ALCL2F      J 6/7#  ALCL3(S)    J 6/7#  ALCL3(L)
    J 6/7#  ALCL3        J 6/69  ALF          J 6/68  ALF+        J 6/72  ALF2        J 6/72  ALF2+
    J 6/72  ALF2-        J 6/7#  ALF3(S)      J 6/7#  ALF3(S)     J 6/7#  ALF3        J 6/65  ALK
    J12/62  ALN(S)       J 3/67  ALN          J 6/7#  ALO         J 6/7#  ALO+        J 12/7  ALO-
    J 9/64  ALOCL        J 3/64  ALOF         J12/67  ALOH        J12/67  ALOH+       J12/67  ALOH-
    J12/68  ALO2         3/8/7   ALO2-        J12/68  ALO2H       3/9/7   ALO2H2      J 6/7#  AL2CL6
    J 6/7#  AL2F6        J 6/72  AL2O         J 6/72  AL2O+       J 9/65  AL2O2       J 6/68  AL2O2+
    J 6/72  AL2O3(S)     J 6/72  AL2O3(L)     4/13/7  AL6O13SI2   3/8/7   ALS         J12/64  B(S)
    J12/64  B(L)         J12/64  B            J12/7#  B+          J12/64  BCL         J 6/68  BCL+
    J12/64  BCLF         3/8/7   BCLO         J 6/72  BCL2        J12/7#  BCL2+       J 6/72  BCL2-
    4/13/7  BCL2H        J12/64  BCL3         J12/64  BF          J 6/72  BF2         J12/7#  BF2+
    J 6/72  BF2-         J 6/69  BF3          J12/64  BH          J12/65  BHF2        J12/64  BH2
    3/8/7   BH2O2        J12/64  BH3          J 6/66  BH(S)       J 6/66  BH          3/3/7   BO-
    J 6/68  BO           J 3/65  BOCL         J 3/65  BOF         J12/66  BOF2        J 6/68  BO2
    J12/68  BO2-         J 6/72  BS           J12/64  B2          J 6/66  B2O         J12/64  B2O2
    J 6/71  B2O3(L)      J 6/71  B2O3         J 3/65  B3O3CL3     J 3/65  B3O3F3      J 3/61  C(S)
    J 3/61  C            L12/66  C+           J 9/65  C-          3/8/7   CAL         3/8/7   CB
    3/3/7   C3-          3/3/7   C2H-         J12/69  CCL         J12/68  CCL2        J 6/7#  CCL3
    J12/68  CCL4         J 6/7#  CF           J12/7#  CF+         J 6/7#  CF2         J12/7#  CF2+
    J 6/69  CF3          J12/71  CF3+         J 6/69  CF4         J12/67  CH          J12/71  CH+
    J12/72  CH2          J 3/61  CH2O         J 6/69  CH3         J 3/61  CH4         3/8/7   CHCL
    J 6/69  CN           J12/7#  CN+         J12/7#  CN-         J 6/66  CHN         J12/7#  CN2
    J 9/65  CO           J12/65  COCL         J 6/61  COCL2       J12/65  COF         J12/69  COF2
    J 3/61  COS          3/3/7   COS-         J 9/65  CO2         4/12/7  CO2-        3/3/7   CO3-
    3/7/7   CO4-         J 6/62  CP           J12/62  CS          3/3/7   CS-         J 6/61  CS2
    J12/69  C2           J12/69  C2-          J12/68  C2CL2       J12/67  C2F2        J 6/69  C2F4
    J 3/67  C2H          J12/67  C2HF         J 3/61  C2H2        J 9/65  C2H4        L 5/72  C2H6
    J 3/67  C2N          J 3/61  C2N2         J 9/66  C2O         J12/69  C3          J 6/68  C3O2
    J12/69  C4           J12/69  C5           J12/68  CA(S)       J12/68  CA(S)       J12/68  CA(L)
    J12/68  CA           J12/7#  CA+          BAR 73  CACO3(S)    BAR 73  CACO3(S)    J 6/7#  CACL
    J 6/7#  CACL2(S)     J 6/7#  CACL2(L)     J 6/7#  CACL2       J12/68  CAF         J12/68  CAF2(S)
    J12/68  CAF2(S)      J12/68  CAF2(L)      J12/68  CAF2        J 6/71  CAO(S)      J 6/71  CAO(L)
    J12/74  CAO          J 6/7#  CAOH         J 6/7#  CAOH+       J12/71  CAO2H2(S)   J 12/7  CAO2H2
    J12/71  CAS(S)       BAR 73  CASO4(S)     J 6/72  CL          J 6/68  CL+         J 6/68  CL-
    J 6/66  CLCN         J 9/65  CLF          J 9/65  CLF3        3/8/7   CLHO        J 6/61  CLO
    3/3/7   CLO-         J 3/61  CLO2         3/3/7   CLO2-       3/8/7   CLP         J 9/65  CL2
    J12/65  CL2O         LH2/67  H            J 9/65  F           J12/71  F-          J 6/69  FCN
    J12/66  FC           J 9/66  FO2          J12/6#  F2          J12/69  F2O         J 3/65  FE(S)
    J 3/65  FE(S)        J 3/65  FE(S)        J 3/65  FE(L)       J 3/65  FE          J 6/65  FECL
    J12/7#  FECL2(S)     J12/7#  FECL2(L)     J12/7#  FECL2       J 6/65  FECL3(S)    J 6/65  FECL3(L)
    J 6/65  FECL3        J 6/65  FEO(S)       J 6/65  FEO(L)      J 9/66  FEO         4/13/7  FEO-
```

```
4/28/7  FEO2
BAR 73  FES(S)
J12/78  FE2CL4
J 6/65  FE3O4(S)
3/8/7   HBO
J 9/64  HCL
J12/69  HCP
J 6/63  HNO2
J 3/61  H2
3/8/7   H2P
3/25/7  H3O+
J12/61  K(L)
3/8/7   KCN
J 6/69  KF(L)
J 6/71  KHF2(L)
J12/67  KO-
J12/71  KOH+
J12/71  K2SO4(S)
J 3/65  LI+
J 6/62  LICl(S)
J12/68  LIF
J 9/67  LIH
J 6/71  LICH(S)
J 6/62  LI2
J 3/64  LI2O
3 9/62  MG(S)
J 3/66  MGCL
J12/69  MGCL2
J12/66  MGH
J 6/67  MGOH
L 7/76  MGSO4(S)
J12/67  MGSIO3(L)
J 6/65  MP
J12/65  MH2
J 6/66  MO+
J12/65  MO2CL
J12/65  N2H4
J12/78  N3
J 9/64  NACL(S)
J12/68  NAF
J12/78  NAOH(S)
J 3/66  NA2CO3(S)
J 6/68  NA2O(S)
J12/66  NA2SO4(S)
L12/66  O+
J 9/65  O2
L12/66  P+
J 6/67  PH
3/7/7   PO2
J12/65  S(S)
J12/69  SF4
3/3/7   SO-
J 6/71  SO2CLF
3/3/7   S2-
J12/71  SI+
J 9/67  SICL
J12/68  SIF2
J12/68  SIH4
J 6/67  SIO2(S)
J 3/67  SI2C
513     18
C
H
N
```

```
4/13/7  FEO2-
BAR 73  FES(S)
J 6/65  FE2O3(S)
J 9/65  H
3/8/7   HBO+
L12/69  HCN
J12/68  HF
J 6/63  HNO3
L11/65  H2O(S)
J12/65  H2S
3/3/7   HP-
J 6/62  K
J 3/66  KCL(S)
J 6/69  KF
J 3/66  K2CO3(S)
J12/78  KOH
J12/61  K2
J12/71  K2SO4(L)
3/3/7   LI-
J 6/62  LICL(L)
J12/68  LIF2-
J12/66  LIH
J 6/71  LICH(L)
J 6/62  LI2CL2
J 3/64  LI2O2
J 9/62  MG(L)
J 6/68  MGCL+
J 3/67  MGF
J 3/64  MGH
J 6/68  MGOH+
L 7/76  MGSO4(L)
J12/75  MG2P4
J12/78  NCO
J 9/65  NH3
J 6/61  NOF
J12/65  NO2F
J12/64  N2O
J 6/62  NA(S)
J 9/64  NACL(L)
J12/68  NAF2-
J12/78  NAOH(L)
J 3/66  NA2CO3(S)
J 6/68  NA2O(S)
J12/66  NA2SO4(S)
J 6/65  O-
J12/66  O2-
3/3/7   P-
J 6/62  PH3
3/3/7   PO2-
J12/65  S(L)
J 9/65  SF6
J 6/72  SOF2
J 6/71  SO2F2
J6/64   SH
3/3/7   SI-
J12/78  SICL2
J 6/78  SIF3
J 3/67  SIH
J 6/67  SIO2(L)
J 3/67  SI2H
13#     67      #
```

```
J 6/66  FEO2H2(S)
BAR 73  FES(S)
2#/7    FE2#3(L)
J 6/66  H+
J12/64  HBO2
J12/78  HCO
3/8/7   HK
J12/72  HOF
L11/65  K2O(L)
J12/66  K2SO4(L)
3/3/7   HS-
J 3/65  K+
J 3/66  KCL(L)
J12/68  KF2-
J 3/66  K2CO3(L)
J12/78  KOH(S)
J 6/63  K2O(S)
J 6/62  LI(S)
J 6/71  LIBO2
J 6/62  LICL
J 9/65  LIFO
3/8/7   LIHAO
J 6/71  LIOH
J12/68  LI2F2
J 6/71  LI2O2H2
J 9/62  MG
J 3/66  MGCLF
J 3/66  MGF2(S)
J12/65  MGO(S)
J 6/67  MGO2H2
J12/67  MGSIO3(S)
J12/67  MG2SIO4(S)
J 3/64  MF2
J 6/63  MO
J 6/78  MOF3
J12/64  MO3
J12/78  MO2+
J 6/62  NA(L)
J12/64  NACL
J 3/63  NAH
J12/78  NAOH
J 3/66  NA2CO3(L)
J 6/68  NA2O(L)
J12/66  NA2SO4(L)
J12/78  OH
J 6/61  O3
J 6/78  PCL3
J 9/62  PH
J 6/67  PS
J 6/71  S
J 5/67  SH
J 6/61  SO2
J 9/65  SO3
J 3/67  SI(S)
J 3/67  SIC
J12/69  SICL3
J 9/63  SIF4
J 9/67  SIO
J 9/67  SIO2
J 3/67  SI3
8       647
```

```
J12/66  FEO2H2
J 6/66  FESO4(S)
8/28/7  FE3O4(L)
J 9/65  H-
J12/75  HBS
J12/78  HCO+
J12/78  HNCO
J 3/64  HO2
J 3/61  H2O
J12/66  H2SO4
3/3/7   HSI-
3/3/7   K-
J 3/66  KCL
J 6/71  KHF2(S)
J 6/69  K2F2
J12/78  KOH(S)
J12/78  K2O2H2
J 6/62  LI(L)
3/3/7   NA-
J12/68  LIF(S)
J 9/67  LIH(S)
J 3/64  LIO
J12/71  LICH+
J 3/64  LI2O(S)
J 6/62  LI3CL3
J12/78  MG+
J12/65  MGCL2(S)
J 3/66  MGF2(L)
J12/65  MGO(L)
J12/71  MGS(S)
J12/67  MGSIO3(S)
J12/67  MG2SIO4(L)
J 6/69  MF3
3/3/7   MO-
J 9/64  MO2
3/3/7   MO3-
J 9/64  N2O4
J 6/62  NA
J12/68  NAF(S)
J12/67  NAO
J12/71  NAOH+
J12/64  NA2CL2
J12/78  NA2O2H2
K11/74  NA2SO4
J12/78  OH+
J 6/62  P
J12/69  PF3
J 6/71  PO
J 6/61  P2
L12/66  S+
J 6/61  SH
3/3/7   SO2-
3/3/7   SO3-
J 3/67  SI(L)
4/25/7  SIC(S)
J12/78  SICL4
J12/69  SIH
J 6/67  SIO2(S)
J12/71  SIS
```

```
J 6/66  FEO3H3(S)
BAR 73  FES2(S)
J 6/66  FE2S3O12(S)
J 3/64  HALO
J12/75  HES+
3/8/7   HCO3-
J 3/63  HNO
J 6/72  HSO3F
L 2/69  H2O2
J12/64  H3B3O6
J12/61  K(S)
J 6/71  KBO2
J 6/69  KF(S)
J 6/71  KHF2(S)
J12/67  KO
J12/78  KOH(L)
J12/71  K2SO4(S)
J 6/62  LI
J 6/71  NABO2
J12/68  LIF(L)
J 9/67  LIH(L)
J12/67  LIO-
J 9/66  LION
J 3/64  LI2O(L)
J12/68  LI3F3
J12/66  MGCO3(S)
J12/65  MGCL2(L)
J 3/66  MGF2
J12/65  MGO
J 6/71  MGS
J12/67  MGSIO3(S)
J 3/61  N
J12/71  NH
J12/72  NOCL
J 6/72  NO2-
J 9/65  N2
J12/64  N2O5
J 3/65  NA+
J12/68  NAF(L)
J12/67  NAO-
J 6/62  NA2
J12/68  NA2F2
J12/66  NA2SO4(S)
J 6/62  O
J12/78  OH-
J 6/61  P(S)
J12/69  PF5
3/3/7   PO-
J 6/61  P4
3/3/7   S-
J 6/71  SO
J 6/71  SO2CL2
J12/65  S2
J 3/67  SI
J 3/67  SIC2
J12/69  SIF
J12/71  SIH+
J 6/67  SIO2(S)
J 3/67  SI2
```

```
          S
          O
          SI
          FE
          AL
          MG
          CA
          B
          P
          K
          NA
          LI
          CL
          F
          I

SPECIES IN SOLUTION
 AL2O3(L)
 SIO2(L)
 MGSIO3(L)
 FE3O4(L)
$RKTINP
EOL   = T,
FROZ  = F,
SUBAR = 0.000000    , 0.000000    , 0.000000    , 0.000000    ,
 0.000000    , 0.000000    , 0.000000    , 0.000000    , 0.000000    ,
 0.000000    , 0.000000    , 0.000000    , 0.000000    ,
SUPAR = 0.000000    , 0.000000    , 0.000000    , 0.000000    ,
 0.000000    , 0.000000    , 0.000000    , 0.000000    , 0.000000    ,
 0.000000    , 0.000000    , 0.000000    , 0.000000    ,
PCP   =  3.20000    , 0.000000    , 0.000000    , 0.000000    ,
 0.000000    , 0.000000    , 0.000000    , 0.000000    , 0.000000    ,
 0.000000    , 0.000000    , 0.000000    , 0.000000    , 0.000000    ,
 0.000000    , 0.000000    , 0.000000    , 0.000000    , 0.000000    ,
 0.000000    , 0.000000    , 0.000000    ,
TCEST =  3000.00    ,
NFZ   =          1,
NEQPT =     100000,
RKTO  = F,
$END

OF =   6.765485
                              EFFECTIVE FUEL          EFFECTIVE OXIDANT          MIXTURE
ENTHALPY                          HFP(2)                  HFP(1)                 HSUB0
(KG-MOL)(DEG K)/KG           -0.47671753E 03          0.22144238E 03          0.13153687E 03

KG-ATOMS/KG                      BFP(I,2)                BFP(I,1)                 B0(I)
      C                       0.48110025E-01          0.00000000E 00          0.61963964E-02
      H                       0.36349855E-01          0.00000000E 00          0.46809511E-02
      N                       0.58126613E-03          0.54644562E-01          0.47602561E-01
      S                       0.25395281E-03          0.00000000E 00          0.32702759E-04
      O                       0.13676232E-01          0.14663674E-01          0.14536815E-01
      SI                      0.68977309E-03          0.00000000E 00          0.78523502E-04
      FE                      0.85651809E-04          0.00000000E 00          0.11029017E-04
      AL                      0.36731793E-03          0.00000000E 00          0.47301350E-04
      MG                      0.88791229E-04          0.00000000E 00          0.18403886E-04
      CA                      0.21772780E-03          0.00000000E 00          0.28037899E-04
      B                       0.46804826E-05          0.00000000E 00          0.60272805E-06
      P                       0.57386770E-05          0.00000000E 00          0.73899790E-06
      K                       0.27006065E-02          0.00000000E 00          0.34770076E-03
      NA                      0.78757424E-04          0.00000000E 00          0.10141983E-04
      LI                      0.54428519E-05          0.00000000E 00          0.70009300E-06
      CL                      0.11349266E-05          0.00000000E 00          0.14615011E-06
      F                       0.43159180E-05          0.00000000E 00          0.55578209E-06
```

```
     E                 0.00000000E 00          0.00000000E 00          0.00000000E 00

PT      C        H        N        S        O        SI       FE       AL       MG       CA       B        P        K        NA
   LI       CL       P        E
 1    -18.366  -12.133  -13.390  -23.485  -16.137  -23.466  -15.320  -22.951  -23.057  -24.082  -30.341  -28.214  -22.352  -24.021
  -24.633  -32.315  -34.943  -14.427   20.000
ADD SOLUTION
 1    -18.354  -12.123  -13.393  -23.474  -16.139  -23.538  -15.361  -23.999  -23.281  -24.082  -30.308  -28.221  -22.356  -24.030
  -24.637  -32.308  -34.895  -14.186    8.000

                                    ION NUMBER DENSITY AND CONDUCTIVITY AT POINT   1
     ION          DENS (M-3)          ION          DENS (M-3)          ION          DENS (M-3)          ION          DENS (M-3)

  1  CA+          8.067E 15       2  CAOH+        1.050E 17       3  K+           1.198E 21       4  KOH+         2.381E 16
  5  LI+          6.624E 15       6  NA+          1.859E 18
                                  .
  1  ALO-         2.014E 19       2  ALOH-        3.049E 15       3  ALO2-        3.353E 20       4  BO-          4.242E 15
  5  BO2-         3.615E 18       6  CN-          7.066E 15       7  CO2-         1.880E 18       8  CO3-         2.522E 16
  9  CL-          8.989E 17      10  F-           6.574E 16      11  FEO-         5.501E 17      12  FEO2-        5.905E 19
 13  H-           4.288E 17      14  HCO3-        1.486E 17      15  HS-          1.676E 17      16  K-           2.974E 17
 17  KO-          3.497E 18      18  NA-          1.355E 16      19  NO-          2.328E 17      20  NO2-         8.268E 17
 21  NAO-         1.068E 17      22  O-           1.376E 19      23  OH-          5.690E 19      24  O2-          2.817E 18
 25  PO-          3.438E 15      26  PO2-         2.940E 19      27  S-           8.017E 16      28  SO-          5.235E 17
 29  SO2-         2.300E 18      30  SO3-         1.357E 16
CONDUCTIVITY = 14.7294  (MHO/M)

 2    -18.888  -12.393  -13.553  -23.837  -16.417  -24.104  -14.971  -25.393  -24.320  -24.364  -31.329  -28.604  -22.548  -24.155
  -24.846  -32.919  -35.724  -14.866    6.000
ADD CAO(S)
 2    -18.888  -12.393  -13.554  -23.837  -16.417  -24.103  -14.971  -25.391  -24.317  -24.429  -31.327  -28.604  -22.548  -24.155
  -24.846  -32.918  -35.723  -14.865    3.000

                                    ION NUMBER DENSITY AND CONDUCTIVITY AT POINT   2
     ION          DENS (M-3)          ION          DENS (M-3)          ION          DENS (M-3)          ION          DENS (M-3)

  1  CA+          1.412E 15       2  CAOH+        2.430E 16       3  K+           4.810E 20       4  KOH+         5.536E 15
  5  LI+          1.674E 15       6  NA+          6.230E 17

  1  ALO-         3.213E 18       2  ALO2-        8.010E 19       3  BO2-         1.679E 18       4  CN-          1.303E 15
  5  CO2-         5.751E 17       6  CO3-         7.086E 15       7  CL-          4.207E 17       8  F-           2.615E 16
  9  FEO-         1.953E 17      10  FEO2-        3.211E 19      11  H-           1.078E 17      12  HCO3-        5.943E 16
 13  HS-          4.773E 16      14  K-           1.056E 17      15  KO-          1.310E 18      16  NA-          4.958E 15
 17  NO-          5.203E 16      18  NO2-         2.591E 17      19  NAO-         4.100E 16      20  O-           3.773E 18
 21  OH-          2.079E 19      22  O2-          7.779E 17      23  PO-          1.037E 15      24  PO2-         2.078E 19
 25  S-           2.169E 16      26  SO-          1.532E 17      27  SO2-         9.964E 17      28  SO3-         5.642E 15
CONDUCTIVITY = 11.6842  (MHO/M)

PC/PT= 1.739390   T=   2709.58
 2    -18.887  -12.392  -13.553  -23.836  -16.416  -24.101  -14.971  -25.388  -24.314  -24.427  -31.325  -28.603  -22.548  -24.155
  -24.845  -32.917  -35.722  -14.863    2.000

                                    ION NUMBER DENSITY AND CONDUCTIVITY AT POINT   2
     ION          DENS (M-3)          ION          DENS (M-3)          ION          DENS (M-3)          ION          DENS (M-3)

  1  CA+          1.419E 15       2  CAOH+        2.441E 16       3  K+           4.819E 20       4  KOH+         5.556E 15
  5  LI+          1.679E 15       6  NA+          6.244E 17

  1  ALO-         3.226E 18       2  ALO2-        8.036E 19       3  BO2-         1.682E 18       4  CN-          1.308E 15
  5  CO2-         5.766E 17       6  CO3-         7.106E 15       7  CL-          4.214E 17       8  F-           2.620E 16
  9  FEO-         1.959E 17      10  FEO2-        3.217E 19      11  H-           1.081E 17      12  HCO3-        5.955E 16
 13  HS-          4.786E 16      14  K-           1.059E 17      15  KO-          1.313E 18      16  NA-          4.969E 15
```

```
 17  NO-          5.22#E 16     18  NO2-         2.598E 17     19  NAO-         4.1#9E 16     2#  O-           3.784E 18
 21  OH-          2.#83E 19     22  O2-          7.8#1E 17     23  PO-          1.#4#E 15     24  PO2-         2.#8#E 19
 25  S-           2.175E 16     26  SO-          1.536E 17     27  SO2-         9.982E 17     28  SO3-         5.653E 15
CONDUCTIVITY = 11.69#6  (MHO/M)

PC/PT= 1.737337   T=   27#9.92
 3    -19.475  -12.696  -13.732  -24.2#4  -16.777  -25.154  -15.#34  -26.993  -26.#4#  -25.61#  -32.496  -28.989  -22.75#  -24.276
   -25.#73  -33.658  -36.715  -15.691    6.###

                                    ION NUMBER DENSITY AND CONDUCTIVITY AT POINT   3
     ION          DENS (M-3)          ION          DENS (M-3)          ION          DENS (M-3)          ION          DENS (M-3)

  1  CAOH+        2 #67E 15       2  K+           1.732E 2#       3  NA+          1.817E 17

  1  ALO-         3.678E 17       2  ALO2-        1.448E 19       3  BO2-         6.6#9E 17       4  CO2-         1.393E 17
  5  CO3-         1.522E 15       6  CL-          1.653E 17       7  F-           8.527E 15       8  FEO-         3.271E 16
  9  FEO2-        8.698E 18      1#  H-           2.1#7E 16      11  HCO3-        1.99#E 16      12  HS-          1.161E 16
 13  K-           3.138E 16      14  KO-          4.#51E 17      15  NA-          1.529E 15      16  NO-          8.611E 15
 17  NO2-         6.253E 16      18  NAO-         1.3#7E 16      19  O-           7.79#E 17      2#  OH-          6.166E 18
 21  O2-          1.583E 17      22  PO2-         1.386E 19      23  S-           4.846E 15      24  SO-          3.669E 16
 25  SO2-         3.7#7E 17      26  SO3-         1.98#E 15
CONDUCTIVITY =  8.2864  (MHO/M)


DIFFUN  -  X=   #.###E-#1    AVN=   1.6293E 26
    1  1.8998E #5 -6.87#5E #4     2  9.1652E #3  2.5#38E #1
 4    -19.554  -12.74#  -13.763  -24.254  -15.83#  -25.3#5  -15.#53  -27.174  -26.215  -25.755  -32.637  -29.#4#  -22.786  -24.3#4
   -25.1#7  -33.759  -36.851  -15.8#3    3.###

                                    ION NUMBER DENSITY AND CONDUCTIVITY AT POINT   4
     ION          DENS (M-3)          ION          DENS (M-3)          ION          DENS (M-3)          ION          DENS (M-3)

  1  CAOH+        1.515E 15       2  K+           1.518E 2#       3  NA+          1.547E 17

  1  ALO-         2.816E 17       2  ALO2-        1.167E 19       3  BO2-         5.797E 17       4  CO2-         1.134E 17
  5  CO3-         1.214E 15       6  CL-          1.448E 17       7  F-           7.277E 15       8  FEO-         2.545E 16
  9  FEO2-        7.147E 18      1#  H-           1.692E 16      11  HCO3-        1.671E 16      12  HS-          9.558E 15
 13  K-           2.644E 16      14  KO-          3.4#9E 17      15  NA-          1.292E 15      16  NO-          6.71#E 15
 17  NO2-         5.#78E 16      18  NAO-         1.1#2E 16      19  O-           6.289E 17      2#  OH-          5.186E 18
 21  O2-          1.267E 17      22  PO2-         1.287E 19      23  S-           3.968E 15      24  SO-          3.#11E 16
 25  SO2-         3.196E 17      26  SO3-         1.684E 15
CONDUCTIVITY =  7.9831  (MHO/M)


DIFFUN  -  X=   5.7773E-#1    AVN=   1.3353E 26
    1  1.5228E #5 -6.2483E #4     2  9.18#8E #3  2.8341E #1
 5    -19.64#  -12.787  -13.795  -24.3#7  -16.889  -25.485  -15.#75  -27.373  -26.4#2  -25.914  -32.792  -29.#94  -22.824  -24.333
   -25.143  -33.869  -36.999  -15.926    3.###

                                    ION NUMBER DENSITY AND CONDUCTIVITY AT POINT   5
     ION          DENS (M-3)          ION          DENS (M-3)          ION          DENS (M-3)          ION          DENS (M-3)

  1  CAOH+        1.#77E 15       2  K+           1.315E 2#       3  NA+          1.299E 17

  1  ALO-         2.1#2E 17       2  ALO2-        9.223E 18       3  BO2-         5.#21E 17       4  CO2-         9.#69E 16
  5  CL-          1.252E 17       6  F-           6.117E 15       7  FEO-         1.929E 16       8  FEO2-        5.752E 18
  9  H-           1.331E 16      1#  HCO3-        1.382E 16      11  HS-          7.743E 15      12  K-           2.194E 16
 13  KO-          2.824E 17      14  NA-          1.#75E 15      15  NO-          5.1#6E 15      16  NO2-         4.#44E 16
 17  NAO-         9.151E 15      18  O-           4.97#E 17      19  OH-          4.291E 18      2#  O2-          9.92#E 16
```

```
 21  PO2-          1.190E 19     22  S-           3.190E 15     23  SO-          2.427E 16     24  SO2-         2.720E 17
 25  SO3-          1.413E 15
CONDUCTIVITY =  7.6461  (MHO/M)


DIFFUN  -  X=   8.2773E-01    AVN=   1.2146E 26
    1  1.3704E 05 -5.9460E 04     2  9.1880E 03  2.9937E 01
 6    -19.731  -12.837  -13.830  -24.362  -16.952  -25.677  -15.100  -27.585  -26.597  -26.086  -32.958  -29.151  -22.863  -24.363
   -25.181  -33.988  -37.156  -16.059    3.000

                                          ION NUMBER DENSITY AND CONDUCTIVITY AT POINT   6
     ION          DENS (M-3)          ION          DENS (M-3)          ION          DENS (M-3)          ION          DENS (M-3)

  1  K+            1.129E 20      2  NA+           1.078E 17

  1  ALO-          1.537E 17      2  ALO2-         7.169E 18      3  BO2-         4.301E 17      4  CO2-         7.137E 16
  5  CL-           1.070E 17      6  F-            5.074E 15      7  FEO-         1.430E 16      8  FEO2-        4.547E 18
  9  H-            1.028E 16     10  HCO3-         1.130E 16     11  HS-          6.189E 15     12  K-           1.797E 16
 13  KO-           2.309E 17     14  NO-           3.808E 15     15  NO2-         3.167E 16     16  NAO-         7.500E 15
 17  O-            3.856E 17     18  OH-           3.502E 18     19  O2-          7.619E 16     20  PO2-         1.095E 19
 21  S-            2.527E 15     22  SO-           1.928E 16     23  SO2-         2.290E 17     24  SO3-         1.172E 15
CONDUCTIVITY =  7.2897  (MHO/M)


DIFFUN  -  X=   1.0777E 00    AVN=   1.9988E 26
    1  1.2258E 05 -5.6234E 04     2  9.1957E 03  3.1618E 01
 7    -19.827  -12.891  -13.866  -24.419  -17.020  -25.888  -15.127  -27.812  -26.800  -26.272  -33.137  -29.209  -22.904  -24.393
   -25.222  -34.117  -37.329  -16.203    3.000

                                          ION NUMBER DENSITY AND CONDUCTIVITY AT POINT   7
     ION          DENS (M-3)          ION          DENS (M-3)          ION          DENS (M-3)          ION          DENS (M-3)

  1  K+            9.596E 19      2  NA+           8.840E 16

  1  ALO-          1.099E 17      2  ALO2-         5.471E 18      3  BO2-         3.640E 17      4  CO2-         5.520E 16
  5  CL-           9.039E 16      6  F-            4.149E 15      7  FEO-         1.034E 16      8  FEO2-        3.524E 18
  9  H-            7.794E 15     10  HCO3-         9.108E 15     11  HS-          4.876E 15     12  K-           1.451E 16
 13  KO-           1.860E 17     14  NO-           2.777E 15     15  NO2-         2.433E 16     16  NAO-         6.059E 15
 17  O-            2.932E 17     18  OH-           2.814E 18     19  O2-          5.728E 16     20  PO2-         1.002E 19
 21  S-            1.970E 15     22  SO-           1.506E 16     23  SO2-         1.905E 17
CONDUCTIVITY =  6.9088  (MHO/M)


DIFFUN  -  X=   1.3277E 00    AVN=   9.8867E 25
    1  1.0896E 05 -5.2810E 04     2  9.2039E 03  3.3365E 01
 8    -19.929  -12.947  -13.904  -24.478  -17.095  -26.119  -15.158  -28.055  -27.011  -26.473  -33.329  -29.270  -22.947  -24.424
   -25.264  -34.255  -37.514  -16.358    3.000

                                          ION NUMBER DENSITY AND CONDUCTIVITY AT POINT   8
     ION          DENS (M-3)          ION          DENS (M-3)          ION          DENS (M-3)          ION          DENS (M-3)

  1  K+            8.067E 19      2  NA+           7.148E 16

  1  ALO-          7.655E 16      2  ALO2-         4.091E 18      3  BO2-         3.039E 17      4  CO2-         4.187E 16
  5  CL-           7.530E 16      6  F-            3.338E 15      7  FEO-         7.278E 15      8  FEO2-        2.672E 18
  9  H-            5.780E 15     10  HCO3-         7.234E 15     11  HS-          3.782E 15     12  K-           1.154E 16
 13  KO-           1.474E 17     14  NO-           1.974E 15     15  NO2-         1.830E 16     16  NAO-         4.818E 15
 17  O-            2.178E 17     18  OH-           2.222E 18     19  O2-          4.204E 16     20  PO2-         9.128E 18
```

```
 21  S-          1.509E 15     22  SO-         1.157E 16     23  SO2-        1.564E 17
CONDUCTIVITY =  6.5025  (MHO/M)


DIFFUN  -  X=   1.5777E 00    AVN=   8.8456E 25
    1  9.624#E #4 -4.9159E #4     2  9.2125E #3  9.5122E #1
 9    -2#.#36  -13.#07  -13.944  -24.538  -17.176  -26.373  -15.191  -28.315  -27.233  -26.69#  -33.537  -29.332  -22.992  -24.456
   -25.3#8  -34.4#5  -37.714  -16.527    3.###

                                    ION NUMBER DENSITY AND CONDUCTIVITY AT POINT  9
     ION          DENS (M-3)          ION          DENS (M-3)          ION          DENS (M-3)          ION          DENS (M-3)

  1  K+           6.7#3E 19      2  NA+          5.695E 16

  1  ALO-         5.186E 16      2  ALO2-        2.99#E 18      3  BO2-         2.5#1E 17      4  CO2-         3.111E 16
  5  CL-          6.178E 16      6  F-           2.638E 15      7  FEO-         4.972E 15      8  FEO2-        1.978E 18
  9  H-           4.188E 15     1#  HCO3-        5.655E 15     11  HS-          2.887E 15     12  K-           9.#16E 15
 13  KO-          1.148E 17     14  NO-          1.366E 15     15  NO2-         1.345E 16     16  NAO-         3.766E 15
 17  O-           1.578E 17     18  OH-          1.722E 18     19  O2-          3.##3E 16     2#  PO2-         8.269E 18
 21  S-           1.135E 15     22  SO-          8.713E 15     23  SO2-         1.267E 17
CONDUCTIVITY =  6.#692  (MHO/M)


DIFFUN  -  X=   1.8277E 00    AVN=   7.868#E 25
    1  8.4437E #4 -4.53##E #4     2  9.2215E #3  3.6845E #1
1#    -2#.148  -13.#71  -13.986  -24.599  -17.265  -26.649  -15.227  -28.594  -27.465  -26.925  -33.759  -29.394  -23.#37  -24.487
   -25.355  -34.568  -37.93#  -16.7#9    3.##3

                                    ION NUMBER DENSITY AND CONDUCTIVITY AT POINT  1#
     ION          DENS (M-3)          ION          DENS (M-3)          ION          DENS (M-3)          ION          DENS (M-3)

  1  K+           5.5#3E 19      2  NA+          4.469E 16

  1  ALO-         3.41#E 16      2  ALO2-        2.133E 18      3  BO2-         2.#25E 17      4  CO2-         2.261E 16
  5  CL-          4.988E 16      6  F-           2.#46E 15      7  FEO-         3.291E 15      8  FEO2-        1.426E 18
  9  H-           2.961E 15     1#  HCO3-        4.348E 15     11  HS-          2.169E 15     12  K-           6.922E 15
 13  KO-          8.776E 16     14  NO2-         9.64#E 15     15  NAO-         2.891E 15     16  O-           1.113E 17
 17  OH-          1.3##E 18     18  O2-          2.##4E 16     19  PO2-         7.452E 18     2#  SO-          6.437E 15
 21  SO2-         1.#11E 17
CONDUCTIVITY =  5.6##9  (MHO/M)


DIFFUN  -  X=   2.#777E 00    AVN=   6.9597E 25
    1  7.3611E #4 -4.15#4E #4     2  9.23##E #3  3.849#E #1
11    -2#.264  -13.137  -14.#3#  -24.66#  -17.363  -26.949  -15.265  -28.892  -27.7#8  -27.179  -33.997  -29.457  -23.#84  -24.518
   -25.4#3  -34.743  -38.163  -16.9#7    3.###

                                    ION NUMBER DENSITY AND CONDUCTIVITY AT POINT  11
     ION          DENS (M-3)          ION          DENS (M-3)          ION          DENS (M-3)          ION          DENS (M-3)

  1  K+           4.462E 19      2  NA+          3.453E 16

  1  ALO-         2.172E 16      2  ALO2-        1.482E 18      3  BO2-         1.613E 17      4  CO2-         1.6#6E 16
  5  CL-          3.958E 16      6  F-           1.555E 15      7  FEO-         2.1##E 15      8  FEO2-        1.###E 18
  9  H-           2.#4#E 15     1#  HCO3-        3.287E 15     11  HS-          1.6#4E 15     12  K-           5.218E 15
 13  KO-          6.576E 16     14  NO2-         6.722E 15     15  NAO-         2.177E 15     16  O-           7.616E 16
 17  OH-          9.729E 17     18  O2-          1.4#1E 16     19  PO2-         6.681E 18     2#  SO-          4.661E 15
 21  SO2-         7.951E 16
```

```
CONDUCTIVITY =  5.1312  (MMO/M)


DIFFUN  -  X=   2.3277E ##    AVN=   6.1248E 25
    1  6.3791E #4 -3.721#E #4     2  9.24#7E #3  3.9964E #1
12    -2#.384  -13.2#7  -14.#76  -24.719  -17.47#  -27.273  -15.3#5  -29.211  -27.963  -27.451  -34.25#  -29.517  -23.131  -24.547
   -25.452  -34.932  -38.415  -17.12#    3.###

                                        ION NUMBER DENSITY AND CONDUCTIVITY AT POINT  12
     ION          DENS (M-3)          ION          DENS (M-3)          ION          DENS (M-3)          ION          DENS (M-3)

  1  K+           3.573E 19       2  NA+          2.625E 16

  1  ALO-         1.338E 16       2  ALO2-        1.##1E 18       3  BO2-         1.262E 17       4  CO2-         1.114E 16
  5  CL-          3.#85E 16       6  F-           1.157E 15       7  FEO-         1.381E 15       8  FEO2-        6.811E 17
  9  H-           1.368E 15      1#  HCO3-        2.441E 15      11  HS-          1.17#E 15      12  K-           3.861E 15
 13  KO-          4.826E 16      14  MO2-         4.551E 15      15  NAO-         1.6#6E 15      16  O-           5.#52E 16
 17  OH-          7.#75E 17      18  O2-          9.#98E 15      19  PO2-         5.96#E 18      2#  SO-          3.3#8E 15
 21  SO2-         6.158E 16
CONDUCTIVITY =  4.6413  (MMO/M)


DIFFUN  -  X=   2.5777E ##    AVN=   5.3664E 25
    1  5.4995E #4 -3.3#69E #4     2  9.25##E #3  4.1149E #1
13    -2#.5#4  -13.278  -14.122  -24.774  -17.588  -27.62#  -15.346  -29.549  -28.23#  -27.743  -34.518  -29.573  -23.177  -24.578
   -25.5#2  -35.135  -38.686  -17.349    3.###

                                        ION NUMBER DENSITY AND CONDUCTIVITY AT POINT  13
     ION          DENS (M-3)          ION          DENS (M-3)          ION          DENS (M-3)          ION          DENS (M-3)

  1  K+           2.828E 19       2  NA+          1.966E 16

  1  ALO-         7.962E 15       2  ALO2-        6.565E 17       3  BO2-         9.694E 16       4  CO2-         7.544E 15
  5  CL-          2.359E 16       6  FEO2-        4.495E 17       7  HCO3-        1.782E 15       8  K-           2.8#3E 15
  9  KO-          3.467E 16      1#  MO2-         2.987E 15      11  NAO-         1.161E 15      12  O-           3.242E 16
 13  OH-          5.#28E 17      14  O2-          5.695E 15      15  PO2-         5.295E 18      16  SO-          2.3#4E 15
 17  SO2-         4.699E 16
CONDUCTIVITY =  4.1431  (MMO/M)
```

THEORETICAL MHD CORE PERFORMANCE

PC = 88.2 PSIA
CASE NO. 2136

	CHEMICAL FORMULA									WT FRACTION (SEE NOTE)	ENERGY CAL/MOL	STATE	TEMP DEG K	DENSITY G/CC
FUEL	C	5.74466	H	4.46442	N	0.07139	S	0.03119	O	0.96628	0.73279	-38252.000	S	298.00	0.0000
FUEL	SI	0.74894	FE	0.10520	AL	0.45115	MG	0.09923	O	2.43164	0.06546	-27800 2.000	S	298.00	0.0000
FUEL	CA	0.26748	B	0.00575	P	0.00705	O	0.29371			0.01278	-42710.000	S	298.00	0.0000
FUEL	K	0.01486	NA	0.09681	O	0.05583					0.00301	-5400.400	S	298.00	0.0000
FUEL	LI	0.00681	CL	0.00142	F	0.00540					0.00016	-934.000	S	298.00	0.0000
FUEL	K	2.00000	C	1.00000	O	3.00000					0.10500	-27490 0.000	S	298.00	0.0000
OXIDANT	N	2.00000									0.76539	12552.699	G	1900.00	0.0000
OXIDANT	O	2.00000									0.23461	13240.100	G	1900.00	0.0000

O/F= 6.7655 PERCENT FUEL= 12.8775 EQUIVALENCE RATIO= 1.0500 REACTANT DENSITY= 0.0000

AXIAL STATION (M)

	CHAMBER	THROAT	0.000	0.250	0.500	0.750	1.000	1.250	1.500	1.750	2.000	2.250	2.500
PC/P	1.0000	1.7373	3.2000	3.5061	3.8671	4.2892	4.7856	5.3735	6.0733	6.9092	7.9105	9.1117	10.551
P, ATM	6.0000	3.4536	1.8750	1.7113	1.5515	1.3989	1.2538	1.1166	0.9879	0.8684	0.7585	0.6585	0.5686
T, DEG K	2877	2710	2536	2515	2493	2470	2445	2419	2391	2362	2331	2299	2265
RHO, G/CC	7.4724-4	4.6135-4	2.7054-4	2.4917-4	2.2815-4	2.0787-4	1.8940-4	1.6979-4	1.5215-4	1.3555-4	1.2010-4	1.0586-4	9.2881-5
H, CAL/G	261.4	157.7	51.1	39.8	27.6	14.9	1.6	-12.3	-26.8	-42.0	-57.6	-73.7	-90.1
S, CAL/(G)(K)	2.1905	2.1905	2.1905	2.1921	2.1937	2.1954	2.1973	2.1992	2.2012	2.2033	2.2055	2.2078	2.2102
M, MOL WT	29.398	29.705	30.021	30.051	30.082	30.115	30.148	30.183	30.218	30.255	30.291	30.327	30.363
(DLV/DLP)T	-1.01355	-1.01146	-1.00852	-1.00822	-1.00789	-1.00754	-1.00718	-1.00680	-1.00640	-1.00599	-1.00557	-1.00513	-1.00468
(DLV/DLT)P	1.3056	1.2873	1.2281	1.2204	1.2119	1.2027	1.1929	1.1826	1.1718	1.1605	1.1488	1.1368	1.1245
CP, CAL/(G)(K)	0.8114	0.8061	0.7253	0.7144	0.7020	0.6884	0.6738	0.6580	0.6411	0.6232	0.6043	0.5844	0.5636
GAMMA (S)	1.1474	1.1442	1.1403	1.1390	1.1398	1.1509	1.1521	1.1536	1.1553	1.1573	1.1597	1.1625	1.1657
SON VEL,M/SEC	966.2	931.6	898.0	894.2	890.1	885.9	881.4	876.7	871.8	866.7	861.5	856.0	850.4
ELEC DENS	6.668 20	3.145 20	1.268 20	1.123 20	9.821 19	8.502 19	7.277 19	6.149 19	5.125 19	4.200 19	3.401 19	2.703 19	2.112 19
IONIC DENS)	1.733 21	6.506 20	2.190 20	1.915 20	1.650 20	1.410 20	1.193 20	1.000 19	8.293 19	6.806 19	5.529 19	4.448 19	3.547 19
SIGMA (MHO/M)	14.7294	11.6906	8.2864	7.9831	7.6461	7.2897	6.9808	6.5025	6.0692	5.6090	5.1312	4.6413	4.1431
W/O IONS	16.4694	12.7836	8.8643	8.5261	8.1510	7.7580	7.3389	6.8937	6.4210	5.9211	5.4046	4.8772	4.3435
FREQ (1/SEC)	1.276 12	7.582 11	4.313 11	3.964 11	3.620 11	3.287 11	2.968 11	2.665 11	2.380 11	2.114 11	1.868 11	1.641 11	1.437 11
MACH NUMBER	0.000	1.000	1.477	1.484	1.490	1.498	1.505	1.513	1.522	1.531	1.540	1.550	1.560
AE/AT		1.0000	1.1976	1.3003	1.4201	1.5506	1.7197	1.9001	2.1295	2.3901	2.6976	3.0606	3.4802
CSTAR, FT/SEC		4641	4641	4641	4641	4641	4641	4641	4641	4641	4641	4641	4641
CF		0.659	0.938	0.938	0.938	0.938	0.938	0.938	0.938	0.938	0.938	0.938	0.938
IVAC LB-SEC/LB		178.0	189.3	188.8	188.2	187.7	187.1	186.5	185.8	185.2	184.5	183.7	183.0
ISP, LB-SEC/LB		95.0	135.3	135.3	135.3	135.3	135.3	135.3	135.3	135.3	135.3	135.3	135.3

MOLE FRACTIONS

AL	9.183 -8	1.503 -8	1.770 -9	1.400 -9	1.001 -9	8.184-10	6.064-10	4.385-10	3.087-10	2.111-10	1.400-10	8.981-11	5.572-11
ALF	1.735 -8	5.131 -9	1.212 -9	1.038 -9	8.745-10	7.279-10	5.976-10	4.829-10	3.836-10	2.991-10	2.286-10	1.710-10	1.251-10
ALO	1.7969-6	3.6544-7	5.4672-8	4.4307-8	3.5117-8	2.7356-8	2.0899-8	1.5615-8	1.1384-8	8.0806-9	5.5718-9	3.7246-9	2.4101-9
ALO-	1.3147-6	3.4441-7	6.7575-8	5.6233-8	4.5803-8	3.6861-8	2.9100-8	2.2519-8	1.7044-8	1.2593-8	9.0626-9	6.3401-9	4.3050-9
ALOCL	1.655 -9	4.910-10	1.135-10	9.651-11	8.071-11	6.661-11	5.417-11	4.331-11	3.399-11	2.613-11	1.964-11	1.441-11	1.031-11
ALOF	3.2679-7	1.4475-7	5.4113-8	4.8793-8	4.3526-8	3.8515-8	3.3768-8	2.9294-8	2.5112-8	2.1246-8	1.7717-8	1.4538-8	1.1725-8
ALOH	1.8531-6	5.2737-7	1.2011-7	1.0213-7	8.5429-8	7.0576-8	5.7498-8	4.6108-8	3.6338-8	2.8109-8	2.1313-8	1.5823-8	1.1497-8
ALO2	1.0715-5	2.9086-6	5.9784-7	5.0098-7	4.1201-7	3.3388-7	2.6609-7	2.0804-7	1.5920-7	1.1899-7	8.6651-8	6.1336-8	4.2110-8
ALO2-	2.1888-5	8.5797-6	2.6604-6	2.3308-6	2.0131-6	1.7190-6	1.4490-6	1.2033-6	9.8264-7	7.8764-7	6.1835-7	4.7443-7	3.5499-7
ALO2H	7.1748-5	2.7735-5	8.8889-6	7.8409-6	6.8306-6	5.8936-6	5.0306-6	4.2415-6	3.5273-6	2.8898-6	2.3288-6	1.8436-6	1.4322-6
ALO2H2	3.7711-4	1.7903-4	7.5231-5	6.8353-5	6.1504-5	5.5145-5	4.9044-5	4.3283-5	3.7881-5	3.2857-5	2.8229-5	2.4011-5	2.0217-5
AL2O3(L)	4.5142-4	5.9178-4	6.6420-4	6.6900-4	6.7377-4	6.7834-4	6.8271-4	6.8689-4	6.9085-4	6.9459-4	6.9809-4	7.0134-4	7.0431-4

BO	9.511 -9	3.618 -9	1.125 -9	9.85#-1#	8.496-1#	7.237-1#	6.#79-1#	5.#26-1#	4.#82-1#	3.253-1#	2.539-1#	1.94#-1#	1 449-1#
BO2	1.1429-7	5.8813-8	2.5638-8	2.3292-6	2.#916-8	1.86#4-8	1.6369-8	1.4224-8	1.2188-8	1.#285-8	8.5337-9	6.9517-9	5.5527-9
BO2-	2.36##-7	1.796#-7	1.2144-7	1.1575-7	1.#958-7	1.#313-7	9.6398-8	8.94#2-8	8.2176-8	7.4782-8	6.7292-8	5.98#2-8	5.242#-8
CH2O	1.1#2 -9	4.358-1#	1.5#9-1#	1.311-1#	1.125-1#	9.556-11	8.#31-11	6.67#-11	5.472-11	4.434-11	3.55#-11	2.8#-11	2.2#4-11
CO	6.875#-2	5.6559-2	4.4256-2	4.3#29-2	4.1699-2	4.#3#4-2	3.8841-2	3.731#-2	3.5714-2	3.4#63-2	3.237#-2	3.#653-2	2.8938-2
COB	2.549#-8	1.3446-8	6.7##1-9	6.1395-9	5.5859-9	5.#55#-9	4.5492-9	4.#7#4-9	3.6219-9	3.2#71-9	2.8292-9	2.45#9-9	2.1946-9
CO2	1.133#-1	1.2726-1	1.4125-1	1.4263-1	1.4413-1	1.4571-1	1.4735-1	1.4988-1	1.5887-1	1.5273-1	1.5463-1	1.5656-1	1.5848-1
CO2-	1.2274-7	6.1561-8	2.5587-8	2.2648-8	1.9795-8	1.7114-8	1.4618-8	1.2317-8	1.#223-8	8.3485-9	6.7##1-9	5.2786-9	4.#794-9
CO3-	1.646 -9	7.587-1#	2.797-1#	2.423-1#	2.#69-1#	1.744-1#	1.449-1#	1.185-1#	9.519-11	7.438-11	5.782-11	4.358-11	3.2#4-11
CA	1.2#94-5	8.1913-6	2.3#14-6	1.9999-6	1.7#86-6	1.4399-6	1.195#-6	9.7445-7	7.793#-7	6.1#25-7	4.6711-7	3.49#5-7	2.5441-7
CACL	8.#77 -9	5.548 -9	1.566 -9	1.353 -9	1.149 -9	9.618-1#	7.929-1#	6.42#-1#	5.#97-1#	3.961-1#	3.##7-1#	2.229-1#	1.61#-1#
CAF	1.3835-7	1.1827-7	4.3335-8	3.8594-8	3.39#3-8	2.945#-8	2.5261-8	2.1356-8	1.7768-8	1.4528-8	1.1659-8	9.1682-9	7.#6#6-9
CAF2	9.879-1#	1.213 -9	6.827-1#	6.362-1#	5.88#-1#	5.396-1#	4.913-1#	4.432-1#	3.958-1#	3.495-1#	3.#5#-1#	2.626-1#	2.229-1#
CAO(S)	#.#### #	5.#954-5	5.#549-4	5.38#5-4	5.721#-4	6.#4#8-4	6.346#-4	6.6355-4	6.9#69-4	7.1579-4	7.38#8-4	7.592#-4	7.7726-4
CAO	1.2236-5	7.66#9-6	1.936#-6	1.65#2-6	1.38#7-6	1.1377-6	9.2149-7	7.3185-7	5.6866-7	4.3145-7	3.1893-7	2.2925-7	1.5999-7
CAOH	4.8797-4	4.3##7-4	1.6556-4	1.48#2-4	1.3#64-4	1.141#-4	9.848#-5	8.3864-5	7.#364-5	5.8#98-5	4.7146-5	3.7565-5	2.9368-5
CAOH+	6.853 -9	2.6#7 -9	3.797-1#	3.#25-1#	2.352-1#	1.792-1#	1.336-1#	9.715-11	6.872-11	4.72#-11	3.14#-11	2.#21-11	1.257-11
CAO2H2	3.113#-4	3.3475-4	1.64#5-4	1.4954-4	1.35##-4	1.2#89-4	1.#72#-4	9.4239-5	8.1862-5	7.#26#-5	5.9528-5	4.9752-5	4.#999-5
CL	1.6#34-7	9.6441-8	5.##22-8	4.64#1-8	4.2632-8	3.8858-8	3.5#99-8	3.1372-8	2.7712-8	2.4161-8	2.#763-8	1.7561-8	1.46#2-8
CL-	5.8687-8	4.4995-8	3.#365-8	2.89#3-8	2.7319-8	2.5663-8	2.3939-8	2.2149-8	2.#3#3-8	1.8418-8	1.6515-8	1.4618-8	1.2755-8
E	4.353#-5	3.3583-5	2.33#5-5	2.2421-5	2.1436-5	2.#387-5	1.9272-5	1.8#89-5	1.6841-5	1.5538-5	1.419#-5	1.2811-5	1.1422-5
F	2.99E2-8	1.6226-8	[illegible]	6.8#94-9	6.1388-9	5.4835-9	4.8473-9	4.2337-9	3.6483-9	3.#973-9	2.5871-9	2.122#-9	1.7872-9
F-	4.292 -9	2.797 -5	[illegible]	1.453 -9	1.535 -9	1.217 -9	1.#99 -9	9.819-1#	8.67#-1#	7.555-1#	6.488-1#	5.481-1#	4.55#-1#
FE	1.3424-4	1.#14[illegible]	4.171[illegible]-5	3.744#-5	3.3114-5	2.8946-5	2.4976-5	2.1235-5	1.7766-5	1.46#8-5	1.1789-5	9.3311-6	7.2398-6
FEO	1.368#-4	1.#97 4	4.7[illegible]7-5	4.2393-5	3.7461-5	3.27#9-5	2.8179-5	2.39#9-5	1.9946-5	1.6337-5	1.3115-5	1.#[illegible]#5-5	7.9141-6
FEO-	3.591 -8	2.#9 -8	6.##9 -9	5.#82 -9	4.21# -9	3.428 -9	2.738 -9	2.141 -9	1.634 -9	1.215 -9	8.787-1#	6.166-1#	4.192-1#
FEO2	2.3336-5	2.#45#-5	9.5342-6	8.5788-6	7.611#-6	6.6727-6	5.7726-6	4.9182-6	4.1195-6	3.3863-6	2.7261-6	2.1451-6	1.6466-6
FEO2-	3.855#-6	3.4349-6	1.5983-6	1.4271-6	1.2553-6	1.#9#2-6	9.333#-7	7.8596-7	6.4988-7	5.2665-7	4.1736-7	3.2276-7	2.43#7-7
FEO2H2	2.#124-5	2.1225-5	1.3##2-5	1.2##3-5	1.1#57-5	1.##41-5	9.#425-6	8.#676-6	7.1262-6	6.2285-6	5.3833-6	4.5995-6	3.8841-6
FE3O4(L)	1.8734-6	2.3621-5	7.2329-5	7.6186-5	8.##95-5	8.388#-5	8.751#-5	9.#954-5	9.4175-5	9.7136-5	9.9812-5	1.#218-4	1.#423-4
H	2.97#-3	1.9675-3	1.186#-3	1.1231-3	1.#562-3	9.8785-4	9.1813-4	8.4726-4	7.7567-4	7.#4#4-4	6.331#-4	5.637#-4	4.9681-4
H-	2.799 -8	1.154 -8	3.871 -9	3.379 -9	2.9#5 -9	2.466 -9	2.#64 -9	1.7## -9	1.376 -9	1.#93 -9	8.51#-1#	6.483-1#	4.83#-1#
HBO2	5.#324-7	3.7452-7	2.5912-7	2.4835-7	2.368#-7	2.2485-7	2.1248-7	1.9971-7	1.8657-7	1.7317-7	1.5959-7	1.4598-7	1.3249-7
HCL	3.72##-7	2.7467-7	1.8598-7	1.7755-7	1.6855-7	1.5926-7	1.4969-7	1.3985-7	1.2978-7	1.1956-7	1.#929-7	9.9#56-8	8.5#84-8
HCN	3.547 -9	1.179 -9	3.385-1#	2.884-1#	2.422-1#	2.#11-1#	1.649-1#	1.334-1#	1.#65-1#	8.376-11	6.5##-11	4.981-11	3.777-11
HCO	1.#746-7	4.#991-8	1.3236-8	1.1452-8	9.7715-9	8.2435-9	6.8682-9	5.6441-9	4.57#3-9	3.6446-9	2.8612-9	2.2115-9	1.6845-9
HCO3-	9.7#2 -9	6.358 -9	3.657 -9	3.335 -9	3.#17 -9	2.7#9 -9	2.412 -9	2.128 -9	1.858 -9	1.6#6 -9	1.371 -9	1.157 -9	9.637-1#
HF	9.5669-6	9.1#26-6	8.3717-6	8.2871-6	8.1896-6	8.#612-6	7.96#6-6	7.8259-6	7.6756-6	7.5##4-6	7.3242-6	7.1197-6	6.896#-6
HX	7.628#-6	4.7827-6	2.7958-6	2.6116-6	2.424#-6	2.2383-6	2.#552-6	1.8755-6	1.7##3-6	1.5311-6	1.3694-6	1.2167-6	1.#744-6
HNCO	6.456 -9	2.674 -9	9.742-1#	8.498-1#	7.326-1#	6.254-1#	5.284-1#	4.414-1#	3.643-1#	2.971-1#	2.395-1#	1.9##-1#	1.586-1#
HNO	9.257#-7	4.4427-7	1.8226-7	1.6212-7	1.4252-7	1.24#5-7	1.#678-7	9.#77#-8	7.61#7-8	6.2871-8	5.11#9-8	4.##43-8	3.2#58-8
HNO2	9.7##7-8	4.8351-8	2.#316-8	1.8##12-8	1.5779-8	1.368#-8	1.1725-8	9.9174-9	8.2671-9	6.7821-9	5.4668-9	4.3228-9	3.348#-9
NO2	3.6967-6	1.9361-6	8.4327-7	7.5635-7	6.7#23-7	5.8777-7	5.#942-7	4.3557-7	3.6679-7	3.#369-7	2.4675-7	1.9634-7	1.5269-7
N2	4.7257-3	3.888#-3	3.1#27-3	3.#292-3	2.9492-3	2.8652-3	2.7772-3	2.6852-3	2.5893-3	2.49#3-3	2.3891-3	2.2869-3	2.1856-3
N2O	5.4224-2	5.7732-2	6.1125-2	6.1441-2	6.1778-2	6.2124-2	6.248#-2	6.2845-2	6.3217-2	6.3593-2	6.397#-2	6.4344-2	6.47#9-2
N2O2	2.8#66-7	1.4975-7	6.8513-8	6.1546-8	5.4691-8	4.815#-8	4.1952-8	3.6123-8	3.#7##-8	2.5722-8	2.1217-8	1.72##-8	1.27#6-8
N2H	4.1653-8	2.2532-8	1.1765-8	1.##6#-8	9.9616-9	9.#953-9	8.2652-9	7.475#-9	6.73#5-9	6.#383-9	5.4#46-9	4.8354-9	4.3368-9
NH	1.#94 -8	5.11# -9	2.133 -9	1.9## -9	1.69# -9	1.484 -9	1.291 -9	1.112 -9	9.487-1#	8.##8-1#	6.694-1#	5.546-1#	4.563-1#
K	5.658#-3	5.6361-3	5.5631-3	5.5793-3	5.5937-3	5.6#7#-3	5.6189-3	5.6289-3	5.6363-3	5.64#8-3	5.6417-3	5.6386-3	5.6311-3
K+	7.8196-5	5.1454-5	3.1815-5	3.#3#1-5	2.87##-5	2.7#7#-5	2.5414-5	2.3731-5	2.2#29-5	2.#32#-5	1.8615-5	1.6933-5	1.5291-5
K-	1.9413-8	1.13#4-8	5.7654-9	5.2798-9	4.7894-9	4.3#98-9	3.8436-9	3.3933-9	2.9628-9	2.5562-9	2.1772-9	1.8295-9	1.5159-9
KBO2	1.6513-5	1.6926-5	1.7295-5	1.7329-5	1.7366-5	1.74#4-5	1.7443-5	1.7484-5	1.7526-5	1.7568-5	1.7612-5	1.7655-5	1.7697-5
KCN	2.993 -9	1.2## -9	4.339-1#	3.788-1#	3.27#-1#	2.798-1#	2.372-1#	1.99#-1#	1.653-1#	1.36#-1#	1.1##-1#	8.957-11	7.2##-11
KCL	3.6359-6	3.8531-6	4.#466-6	4.0639-6	4.#823-6	4.1#12-6	4.12#7-6	4.14#7-6	4.161#-6	4.1816-6	4.2#22-6	4.2226-6	4.2426-6
KF	6.1166-6	6.9655-6	8.#139-6	8.1215-6	8.2429-6	8.3751-6	8.5195-6	8.6779-6	8.8515-6	9.#416-6	9.25#5-6	9.4758-6	9.7191-6
KO	2.1698-4	1.5315-4	9.82#9-5	9.2659-5	8.6871-5	8.1##3-5	7.5#68-5	6.9##8-5	6.3#69-5	5.7#79-5	5.1157-5	4.5359-5	3.9746-5
KO-	2.28#8-7	1.4#22-7	7.4433-8	6.8#59-8	6.1641-8	5.5365-8	4.9264-8	4.3371-8	3.7734-8	3.24#6-8	2.7436-8	2.287#-8	1.8745-8
KOH	4.2295-3	4.4434-3	4.6861-3	4.6859-3	4.6885-3	4.6926-3	4.6987-3	4.7#72-3	4.7186-3	4.7333-3	4.7516-3	4.7739-3	4.8##2-3
KOH+	1.881 -9	5.932-1#	1.54#-1#	1.3##-1#	1.#79-1#	8.835-11	7.13#-11	5.658-11	4.41#-11	3.371-11	2.524-11	1.85#-11	1.326-11
K2	2.16#4-7	1.422#-7	8.9##9-8	8.3464-8	7.7857-8	7.2321-8	6.6874-8	6.1535-8	5.6336-8	5.1315-8	4.6511-8	4.1962-8	3.77#6-8
K2O2H2	3.754#-9	3.8342-9	4.#824-9	4.##32-9	3.9328-9	3.8679-9	3.8#8#-9	3.7614-9	3.7242-9	3.7##8-9	3.6943-9	3.7#82-9	3.7463-9
LI	2.1654-6	1.7655-6	1.3669-6	1.3363-6	1.3#18-6	1.2648-6	1.2249-6	1.182#-6	1.1359-6	1.#867-6	1.#345-6	9.7958-7	9.2253-7
LIBO2	3.168#-8	2.9828-8	2.74#7-8	2.7235-8	2.7#29-8	2.68##-8	2.6537-8	2.624#-8	2.59#3-8	2.5524-8	2.5#99-8	2.4626-8	2.41#5-8
NABO2	3.##85-7	3.#775-7	3.1565-7	3.1573-7	3.1589-7	3.16#7-7	3.162#-7	3.1654-7	3.168#-7	3.172#-7	3.1761-7	3.18#9-7	3.1862-7

LICL	5.7837-9	5.7667-9	5.6832-9	5.6887-9	5.5935-9	5.5832-9	5.5674-9	5.5459-9	5.5177-9	5.4818-9	5.4373-9	5.3833-9	5.3193-9
LIF	3.4459-8	4.8246-8	4.7451-8	4.8486-8	4.9627-8	5.0878-8	5.2211-8	5.3669-8	5.5254-8	5.6974-8	5.8844-8	6.0849-8	6.2888-8
LIH	1.1337-8	6.7145-9	3.6493-9	3.3951-9	3.1351-9	2.8785-9	2.6252-9	2.3778-9	2.1356-9	1.9831-9	1.6819-9	1.4741-9	1.2819-9
LIO	3.7454-7	2.5323-7	1.5343-7	1.4446-7	1.3584-7	1.2558-7	1.1581-7	1.0683-7	9.6218-8	8.6451-8	7.6822-8	6.7448-8	5.8422-8
LIOH	1.7969-5	1.8691-5	1.9379-5	1.9436-5	1.9498-5	1.9567-5	1.9636-5	1.9718-5	1.9787-5	1.9868-5	1.9952-5	2.0038-5	2.0127-5
MG	4.7594-5	1.7688-5	3.1728-6	2.7869-6	2.2799-6	1.9857-6	1.5792-6	1.2954-6	1.0587-6	8.4161-7	6.6489-7	5.1742-7	3.9626-7
MGF	1.256 -8	4.737 -9	8.688-10	7.362-10	6.168-10	5.114-10	4.289-10	3.429-10	2.761-10	2.196-10	1.723-10	1.338-10	1.011-10
MGH	1.878 -7	4.521 -8	5.846 -9	4.832 -9	3.164 -9	2.453 -9	1.876 -9	1.413 -9	1.046 -9	7.618-10	5.438-10	3.797-10	2.681-10
MGN	2.355 -8	4.639 -9	4.841-10	3.122-10	2.361-10	1.759-10	1.288-10	9.264-11	6.524-11	4.493-11	3.021-11	1.988-11	1.265-11
MGO	1.328-3	4.8123-5	8.3273-6	7.8219-6	5.8395-6	4.8136-6	3.9286-6	3.1698-6	2.5227-6	1.9789-6	1.5267-6	1.1563-6	8.5828-7
MGOH	5.3176-5	2.3569-5	5.2795-6	4.5777-6	3.9298-6	3.3558-6	2.8466-6	2.3977-6	2.0833-6	1.6589-6	1.3681-6	1.1538-6	8.8398-7
MGO2H2	1.2606-5	6.2173-6	1.5984-6	1.3868-6	1.1995-6	1.0331-6	8.8568-7	7.5518-7	6.4887-7	5.3896-7	4.5852-7	3.7355-7	3.0782-7
MGSIO3(L)	6.0841-5	2.1386-4	2.9389-4	2.9683-4	2.9876-4	3.0121-4	3.0339-4	3.0533-4	3.0707-4	3.0861-4	3.0998-4	3.1118-4	3.1224-4
N	2.8563-6	7.8861-7	2.4761-7	2.1548-7	1.8453-7	1.5611-7	1.3823-7	1.0692-7	8.6255-8	6.8267-8	5.2927-8	4.0144-8	2.9758-8
NCO	1.999 -9	6.8558-10	1.484-10	1.237-10	1.014-10	8.187-11	6.588-11	5.083-11	3.896-11	2.928-11	2.155-11	1.553-11	1.096-11
NH	8.994 -8	3.185 -8	8.818 -9	7.537 -9	6.339 -9	5.263 -9	4.387 -9	3.467 -9	2.742 -9	2.128 -9	1.619 -9	1.286 -9	8.883-10
NH2	6.9499-8	2.8879-8	1.0468-8	9.1826-9	7.9562-9	6.8251-9	5.7989-9	4.8543-9	4.0171-9	3.2888-9	2.6418-9	2.0998-9	1.6464-9
NH3	1.238 -8	6.882 -9	2.787 -9	2.586 -9	2.234 -9	1.978 -9	1.738 -9	1.516 -9	1.311 -9	1.125 -9	9.581-10	8.108-10	6.829-10
NO	1.2814-2	8.5261-3	5.4214-3	5.1218-3	4.8057-3	4.4826-3	4.1532-3	3.8181-3	3.4789-3	3.1383-3	2.7993-3	2.4655-3	2.1418-3
NO-	1.528 -8	5.574 -9	1.582 -9	1.348 -9	1.115 -9	9.131-10	7.353-10	5.888-10	4.489-10	3.388-10	2.492-10	1.783-10	1.238-10
NO2	5.8861-6	2.7762-6	1.2893-6	1.1638-6	1.0373-6	9.1606-7	7.9996-7	6.8968-7	5.8582-7	4.8957-7	4.0166-7	3.2228-7	2.5351-7
NO2-	5.3975-8	2.7739-8	1.1489-8	1.0135-8	8.8274-9	7.5936-9	6.4442-9	5.3843-9	4.4287-9	3.5596-9	2.8846-9	2.1578-9	1.6151-9
N2	6.9444-1	7.0299-1	7.1103-1	7.1179-1	7.1268-1	7.1345-1	7.1433-1	7.1524-1	7.1617-1	7.1713-1	7.1818-1	7.1908-1	7.2085-1
N2O	1.3981-6	7.5327-7	3.5373-7	3.1935-7	2.8548-7	2.5288-7	2.2191-7	1.9261-7	1.6518-7	1.3988-7	1.1664-7	9.5885-8	7.7395-8
NA	2.1989-4	2.2242-4	2.2511-4	2.2599-4	2.2686-4	2.2775-4	2.2864-4	2.2953-4	2.3041-4	2.3128-4	2.3211-4	2.3298-4	2.3365-4
NA+	1.2137-7	6.6671-8	3.3385-8	3.0892-8	2.8352-8	2.5855-8	2.3410-8	2.1025-8	1.8716-8	1.6583-8	1.4485-8	1.2441-8	1.0629-8
NACL	5.2991-8	5.5188-8	5.6765-8	5.6743-8	5.6723-8	5.6696-8	5.6662-8	5.6628-8	5.6568-8	5.6588-8	5.6429-8	5.6337-8	5.6227-8
NAF	8.1894-8	8.9988-8	1.0868-7	1.0146-7	1.0235-7	1.0334-7	1.0442-7	1.0561-7	1.0693-7	1.0839-7	1.1008-7	1.1173-7	1.1368-7
NAH	3.8436-7	2.5697-7	1.6268-7	1.5388-7	1.4335-7	1.3365-7	1.2483-7	1.1458-7	1.0514-7	9.6825-8	8.7222-8	7.8815-8	7.0188-8
NAO	7.7719-6	5.6817-6	3.8892-6	3.6863-6	3.3946-6	3.1794-6	2.9611-6	2.7481-6	2.5172-6	2.2948-6	2.0721-6	1.8532-6	1.6394-6
NAO-	6.974 -9	4.387 -9	2.482 -9	2.288 -9	1.997 -9	1.798 -9	1.685 -9	1.417 -9	1.238 -9	1.067 -9	9.081-10	7.612-10	6.278-10
NAOH	7.8161-5	7.1982-5	7.4832-5	7.3632-5	7.3257-5	7.2887-5	7.2527-5	7.2183-5	7.1862-5	7.1568-5	7.1388-5	7.1085-5	7.0958-5
O	4.8699-3	2.4646-3	1.2732-3	1.1883-3	1.0834-3	9.8688-4	8.8898-4	7.9233-4	6.9726-4	6.0482-4	5.1616-4	4.3255-4	3.5522-4
O-	8.9838-7	4.8397-7	1.4314-7	1.2558-7	1.0848-7	9.2466-8	7.7641-8	6.4875-8	5.1861-8	4.1883-8	3.1777-8	2.3943-8	1.7532-8
OH	1.8254-2	7.5352-3	5.8129-3	4.7745-3	4.5193-3	4.2553-3	3.9827-3	3.7816-3	3.4132-3	3.1196-3	2.8231-3	2.5268-3	2.2343-3
OH-	3.7147-6	2.2243-6	1.1338-6	1.0355-6	9.3667-7	8.3969-7	7.4513-7	6.5368-7	5.6594-7	4.8369-7	4.0594-7	3.3531-7	2.7188-7
O2	1.9826-2	1.5846-2	1.0426-2	9.9651-3	9.4685-3	8.9274-3	8.3648-3	7.7716-3	7.1498-3	6.5886-3	5.8312-3	5.1481-3	4.4614-3
O2-	1.8398-7	8.3293-8	2.9879-8	2.5296-8	2.1651-8	1.8278-8	1.5171-8	1.2366-8	9.8788-9	7.6958-9	5.8451-9	4.3116-9	3.0792-9
O3	4.768 -9	1.749 -9	4.766-10	4.023-10	3.331-10	2.712-10	2.168-10	1.696-10	1.294-10	9.689-11	6.918-11	4.812-11	3.221-11
PH	4.6861-8	2.8687-8	1.6916-8	1.5918-8	1.4884-8	1.3878-8	1.2873-8	1.1896-8	1.0947-8	1.0035-8	9.1786-9	8.3639-9	7.6261-9
PO	1.8945-6	1.3893-6	9.7174-7	9.3456-7	8.9584-7	8.5448-7	8.1291-7	7.7839-7	7.2718-7	6.8341-7	6.3978-7	5.9649-7	5.5437-7
PO2	1.7851-5	1.8284-5	1.8588-5	1.8621-5	1.8655-5	1.8698-5	1.8725-5	1.8761-5	1.8796-5	1.8831-5	1.8865-5	1.8897-5	1.8926-5
PO2-	1.9191-6	2.2287-6	2.5463-6	2.5786-6	2.5972-6	2.6251-6	2.6543-6	2.6851-6	2.7175-6	2.7517-6	2.7874-6	2.8246-6	2.8631-6
S	2.2856-6	1.1359-6	5.3244-7	4.8956-7	4.4616-7	4.0386-7	3.6286-7	3.2336-7	2.8566-7	2.5815-7	2.1714-7	1.8695-7	1.5982-7
S-	5.234 -9	2.323 -9	8.985-10	7.923-10	6.963-10	6.068-10	5.218-10	4.439-10	3.728-10	3.098-10	2.527-10	2.048-10	1.626-10
SH	4.8176-7	2.4525-7	1.1612-7	1.0638-7	9.6665-8	8.7293-8	7.8318-8	6.9753-8	6.1684-8	5.4171-8	4.7274-8	4.1044-8	3.5522-8
SN	3.119 -8	1.298 -8	4.752 -9	4.287 -9	3.682 -9	3.194 -9	2.744 -9	2.332 -9	1.961 -9	1.629 -9	1.339 -9	1.098 -9	8.788-10
SO	9.4755-5	6.7584-5	4.5435-5	4.3444-5	4.1342-5	3.9196-5	3.7818-5	3.4787-5	3.2541-5	3.0298-5	2.8855-5	2.5861-5	2.3739-5
SO-	3.4175-8	1.6488-8	6.7411-9	6.0118-9	5.2969-9	4.6228-9	3.9895-9	3.4821-9	2.8634-9	2.3769-9	1.9447-9	1.5678-9	1.2456-9
SO2	8.6276-4	9.8888-4	9.3262-4	9.3551-4	9.3858-4	9.4173-4	9.4496-4	9.4827-4	9.5163-4	9.5582-4	9.5841-4	9.6177-4	9.6584-4
SO2-	1.5812-7	1.0657-7	6.8117-8	6.3885-8	5.9365-8	5.4987-8	5.0451-8	4.6814-8	4.1638-8	3.7336-8	3.3173-8	2.9184-8	2.5418-8
SO3	3.8561-7	2.7188-7	2.2812-7	2.2148-7	2.1425-7	2.0676-7	1.9898-7	1.9064-7	1.8197-7	1.7288-7	1.6336-7	1.5342-7	1.4388-7
SI	1.3886 -9	3.522-10	4.912-11	3.881-11	2.848-11	2.076-11	1.469-11	1.085-11	6.628-12	4.283-12	2.557-12	1.491-12	8.328-13
SIO	1.9167-3	1.4748-3	6.9462-4	6.2269-4	5.4868-4	4.7688-4	4.0626-4	3.4818-4	2.7982-4	2.2383-4	1.7534-4	1.3396-4	9.9756-5
SIO2(L)	1.8679-4	4.5152-4	1.2633-3	1.3448-3	1.4276-3	1.5899-3	1.5897-3	1.6656-3	1.7363-3	1.8885-3	1.8575-3	1.9865-3	2.9475-3
SIO2	2.2345-4	1.9881-4	9.9888-5	9.8879-5	7.9976-5	6.9972-5	6.8226-5	5.8889-5	4.2133-5	3.4128-5	2.6976-5	2.0788-5	1.5592-5
SIS	1.316 -9	5.432-10	1.346-10	1.117-10	9.853-11	7.288-11	5.688-11	4.268-11	3.171-11	2.297-11	1.623-11	1.119-11	7.569-12

SPECIES IN SOLUTION AT LAST STATION
AL2O3(L) FE3O4(L) MGSIO3(L) SIO2(L)

ADDITIONAL PRODUCTS WHICH WERE CONSIDERED BUT WHOSE MOLE FRACTIONS WERE LESS THAN 8.18888E-08 FOR ALL ASSIGNED CONDITIONS

AL(S) AL(L) AL+ ALBO2 ALCL ALCL+ ALCLF ALCLF2 ALCL2 ALCL2+

ALCL2-	ALCL2F	ALCL3(S)	ALCL3(L)	ALCL3	ALF+	ALF2	ALF2+	ALF2-	ALF3(S)
ALF3(S)	ALF3	ALN	ALN(S)	ALN	ALO+	ALON+	ALON-	AL2CL6	AL2F6
AL2O	AL2O+	AL2O2	AL2O2+	AL2O3(S)	AL6O13SI2	ALS	B(S)	B(L)	B
B+	BCL	BCL+	BCLF	BCLO	BCL2	BN	BCL2+	BCL2-	BCL3
BF	BF2	BF2+	BF2-	BF3	BOF2	BNF2	BN2	BN2O2	BN3
BN(S)	BN	BO-	BOCL	BOF	C	BS	B2	B2O	B2O2
B2O3(L)	B2O3	B3O3CL3	B3O3F3	C(S)	C+	C-	CAL	CB	CF2
C3-	C2N-	CCL	CCL2	CCL3	CCL4	CF	CF+	CF2	CF2+
CF3	CF3+	CF4	CN	CN+	CN2	CN3	CN4	CNCL	CN
CN+	CN-	CNN	CN2	COCL	COCL2	COF	COF2	CO8-	CO4-
CP	CS	CS-	CS2	C2	C2-	C2CL2	C2F2	C2F4	C2N
C2NF	C2N2	C2H4	C2H6	C2N	C2N2	C2O	C3	C3O2	C4
C5	CA(S)	CA(S)	CA(L)	CA+	CACO3(S)	CACO3(S)	CACL2(S)	CACL2(L)	CACL2
CAF2(S)	CAF2(S)	CAF2(L)	CAO(L)	CAO2H2(S)	CAS(S)	CASO4(S)	CL+	CLCN	CLF
CLF3	CLNO	CLO	CLO-	CLO2	CLO2-	CLP	CL2	CL2O	FCN
FO	FO2	F2	F2O	FE(S)	FE(S)	FE(S)	FE(L)	FECL	FECL2(S)
FECL2(L)	FECL2	FECL3(S)	FECL3(L)	FECL3	FEO(S)	FEO(L)	FEO2H2(S)	FEO3H3(S)	FES(S)
FES(S)	FES(S)	FESO4(S)	FES2(S)	FE2CL4	FE2O3(S)	FE2O3(L)	FE2SiO12(S)	FE3O4(S)	H+
HALO	HBO	HBO+	HBS	HBS+	HCO+	HCP	HNO3	HOF	HSO3F
H2O(S)	H2O(L)	H2P	H2SO4(L)	H2SO4	H3B3O6	H3O+	HF-	HS1-	K(S)
K(L)	KCL(S)	KCL(L)	KF(S)	KF(L)	KF2-	KHF2(S)	FHF2(S)	KHF2(L)	K2CO3(S)
K2CO3(L)	K2F2	KOH(S)	KOH(S)	KOH(L)	K2O(S)	K2SO4(S)	K2SO4(S)	K2SO4(L)	LI(S)
LI(L)	LI+	LI-	NA-	LICL(S)	LICL(L)	LIF(S)	LIF(L)	LIF2-	LIFO
LIH(S)	LIH(L)	LIN	LINAO	LIO-	LIOH(S)	LIOH(L)	LIOH+	LIOH	LI2
LI2CL2	LI2F2	LI2O(S)	LI2O(L)	LI2O	LI2O2	LI2O2H2	LI3CL3	LI3F3	MG(S)
MG(L)	MG+	MGCO3(S)	MGCL	MGCL+	MGCLF	MGCL2(S)	MGCL2(L)	MGCL2	MGF2(S)
MGF2(L)	MGF2	MGO(S)	MGO(L)	MGOH+	MGS(S)	MGS	MGSO4(S)	MGSO4(L)	MGSIO3(S)
MGSIO3(S)	MGSIO3(S)	MG2F4	MG2SIO4(S)	MG2SIO4(L)	MF	MF2	MF3	MOCL	MO+
MOF	MOF3	MO2CL	MO2F	MO3	MO3-	N2H4	N2O+	N2O4	N2O5
N3	NA(S)	NA(L)	NACL(S)	NACL(L)	NAF(S)	NAF(L)	NAF2-	NAOH(S)	NAOH(L)
NAOH+	NA2	NA2CO3(S)	NA2CO3(S)	NA2CO3(L)	NA2CL2	NA2F2	NA2O(S)	NA2O(S)	NA2O(L)
NA2O2H2	NA2SO4(S)	NA2SO4(S)	NA2SO4(S)	NA2SO4(L)	NA2SO4	O+	OH+	P	P(S)
P+	P-	PCL3	PF3	PF5	PH	PH3	PO-	PS	P2
P4	S(S)	S(L)	S+	SF4	SF6	SOF2	SO2CL2	SO2CLF	SO2F2
SO3-	S2	S2-	S8	SI(S)	SI(L)	SI+	SI-	SIC	SIC(S)
SICL	SICL	SICL2	SICL3	SICL4	SIF	SIF2	SIF3	SIF4	SIH
SIH+	SIH4	SIN	SIO2(S)	SIO2(S)	SIO2(S)	SI2	SI2C	SI2N	SI3

NOTE. WEIGHT FRACTION OF FUEL IN TOTAL FUELS AND OF OXIDANT IN TOTAL OXIDANTS

```
DIFFUN  -  X=   2.8277E 00    AVN=   4.6881E 25
    1  4.7246E 04 -2.8991E 04     2  9.2612E 03  4.1956E 01
 3    -20.622  -13.351  -14.170  -24.821  -17.717  -27.988  -15.388  -29.906  -28.508  -28.052  -34.798  -29.622  -23.223  -24.600
   -25.551  -35.353  -38.974  -17.595    4.000

                                    ION NUMBER DENSITY AND CONDUCTIVITY AT POINT   3
     ION          DENS (M-3)          ION          DENS (M-3)          ION          DENS (M-3)          ION          DENS (M-3)

  1  K+           2.215E 19       2  NA+          1.451E 16

  1  ALO-         4.579E 15       2  ALO2-        4.176E 17       3  BO2-         7.312E 16       4  CO2-         4.993E 15
  5  CL-          1.770E 16       6  FEO2-        2.874E 17       7  HCO3-        1.280E 15       8  K-           2.000E 15
  9  KO-          2.437E 16      10  NO2-         1.897E 15      11  O-           2.011E 16      12  OH-          3.491E 17
 13  O2-          3.428E 15      14  PO2-         4.687E 18      15  SO-          1.577E 15      16  SO2-         3.536E 16
CONDUCTIVITY =  3.6485  (MHO/M)

ADD SIC(S)


DIFFUN  -  X=   3.0777E 00    AVN=   4.2687E 25
    1  4.0490E 04 -2.5047E 04     2  9.2717E 03  4.2240E 01
 4    -20.733  -13.423  -14.218  -24.855  -17.861  -28.367  -15.427  -30.280  -28.004  -28.377  -35.005  -29.657  -23.265  -24.620
   -25.598  -35.584  -39.282  -17.857    3.000
REMOVE SIC(S)
 4    -20.736  -13.424  -14.218  -24.858  -17.859  -28.373  -15.427  -30.279  -28.796  -28.378  -35.007  -29.660  -23.266  -24.621
   -25.599  -35.584  -39.281  -17.857    2.000

                                    ION NUMBER DENSITY AND CONDUCTIVITY AT POINT   4
     ION          DENS (M-3)          ION          DENS (M-3)          ION          DENS (M-3)          ION          DENS (M-3)

  1  K+           1.720E 19       2  NA+          1.059E 16

  1  ALO-         2.549E 15       2  ALO2-        2.577E 17       3  BO2-         5.417E 16       4  CO2-         3.235E 15
  5  CL-          1.304E 16       6  FEO2-        1.780E 17       7  K-           1.404E 15       8  KO-          1.678E 16
  9  NO2-         1.165E 15      10  O-           1.205E 16      11  OH-          2.370E 17      12  O2-          1.903E 15
 13  PO2-         4.139E 18      14  SO-          1.064E 15      15  SO2-         2.628E 16
CONDUCTIVITY =  3.1666  (MHO/M)

AL2O3(L)     FROZEN OUT OF SOLUTION
PHASE CHANGE, REPLACE AL2O3(L)    WITH AL2O3(S)
ADD SIC(S)


DIFFUN  -  X=   3.3277E 00    AVN=   3.5614E 25
    1  3.4701E 04 -2.1585E 04     2  9.2823E 03  4.2427E 01
 5    -20.976  -13.530  -14.269  -25.029  -17.931  -28.694  -15.362  -30.211  -28.737  -28.753  -35.477  -29.830  -23.329  -24.657
   -25.681  -35.791  -39.557  -18.125    3.000

                                    ION NUMBER DENSITY AND CONDUCTIVITY AT POINT   5
     ION          DENS (M-3)          ION          DENS (M-3)          ION          DENS (M-3)          ION          DENS (M-3)

  1  K+           1.348E 19       2  NA+          7.873E 15

  1  ALO-         2.330E 15       2  ALO2-        2.770E 17       3  BO2-         4.047E 16       4  CO2-         2.089E 15
  5  CL-          9.691E 15       6  FEO2-        1.394E 17       7  KO-          1.203E 16       8  O-           7.741E 15
  9  OH-          1.653E 17      10  O2-          1.312E 15      11  PO2-         3.589E 18      12  SO2-         1.928E 16
CONDUCTIVITY =  2.7343  (MHO/M)
```

THEORETICAL MHD CORE PERFORMANCE

PC = 80.2 PSIA
CASE NO. 2136

CHEMICAL FORMULA										WT FRACTION (SEE NOTE)	ENERGY CAL/MOL	STATE	TEMP DEG K	DENSITY G/CC
FUEL	C	5.74466	H	4.46442	N	0.07139	S	0.03119	O	0.08628	0.73279	-38252.000	S	298.00	0.0000
FUEL	SI	0.74894	FE	0.10520	AL	0.45115	MG	0.09923	O	2.43164	0.06546	-278002.000	S	298.00	0.0000
FUEL	CA	0.26748	B	0.00575	P	0.00705	O	0.29371			0.01278	-42710.000	S	298.00	0.0000
FUEL	K	0.01486	NA	0.09681	O	0.05583					0.00381	-5408.400	S	298.00	0.0000
FUEL	LI	0.00681	CL	0.00142	F	0.00540					0.00016	-934.000	S	298.00	0.0000
FUEL	K	2.00000	C	1.00000	O	3.00000					0.18500	-274900.000	S	298.00	0.0000
OXIDANT	N	2.03000									0.76539	12552.699	G	1900.00	0.0000
OXIDANT	O	2.00000									0.23461	13240.100	G	1900.00	0.0000

O/F= 6.7635 PERCENT FUEL= 12.8773 EQUIVALENCE RATIO= 1.0300 REACTANT DENSITY= 0.0000

AXIAL STATION (M)

	CHAMBER	THROAT	2.750	3.000	3.250
PC/P	1.0000	1.7373	12.271	14.310	16.700
P, ATM	6.0000	3.4536	0.4890	0.4193	0.3591
T, DEG K	2877	2710	2231	2195	2162
RHO, G/CC	7.4724-4	4.6135-4	8.1200-5	7.0049-5	6.1675-5
H, CAL/G	261.4	157.7	-106.0	-123.5	-139.0
S, CAL/(G)(K)	2.1905	2.1905	2.2127	2.2152	2.2177
M, MOL WT	29.390	29.705	30.390	30.431	30.464
(DLV/DLP)T	-1.01355	-1.01146	-1.00423	-1.00377	-1.00428
(DLV/DLT)P	1.0056	1.2073	1.1120	1.0993	1.0900
CP, CAL/(G)(K)	0.0114	0.0061	0.5419	0.5194	0.5194
GAMMA (S)	1.1474	1.1442	1.1695	1.1739	1.1720
SON VEL,M/SEC	966.2	931.6	844.7	839.0	831.8
ELEC DENS	6.668 20	3.145 20	1.623 19	1.226 19	9.214 18
IONIC DENS	1.733 21	6.506 20	2.809 19	2.215 19	1.775 19
SIGMA (MHO/M)	14.7294	11.6906	3.6485	3.1666	2.7343
W/O ZONE	16.4694	12.7836	3.8160	3.3044	2.8486
FREQ (1/SEC)	1.276 12	7.582 11	1.253 11	1.091 11	9.496 10
MACH NUMBER	0.000	1.000	1.370	1.581	1.595
AE/AT		1.0000	3.9896	4.5729	5.2532
CSTAR, FT/SEC		4641	4641	4641	4641
CF		0.659	0.930	0.930	0.930
IVAC LB-SEC/LB		170.0	182.2	181.4	180.6
ISP, LB-SEC/LB		95.0	135.3	135.3	135.3

MOLE FRACTIONS

AL	9.183 -8	1.503 -8	3.345-11	1.946-11	1.791-11
ALF	1.735 -8	5.131 -9	8.955-11	6.279-11	7.021-11
ALO	1.797 -6	3.654 -7	1.509 -9	9.142-10	9.320-10
ALO-	1.3147-6	3.4461-7	2.0347-9	1.8104-9	1.9032-9
ALOCL	1.655 -9	4.910-10	7.186-12	4.800-12	5.617-12
ALOF	3.2679-7	1.1475-7	9.2879-9	7.2231-9	9.4992-9
ALOH	1.0531-6	5.2737-7	8.1777-9	5.7018-9	6.4074-9
ALO2	1.0715-5	2.9086-6	2.7996-8	1.8005-8	2.0708-8
ALO2-	2.1888-5	8.5797-6	2.5856-7	1.8308-7	2.2628-7
ALO2H	7.1748-5	2.7735-5	1.0909-6	8.1467-7	1.0416-6
ALO2H2	3.7711-4	1.7903-4	1.6853-5	1.3921-5	1.8981-5
AL2O3(S)	0.0000 0	0.0000 0	0.0000 0	0.0000 0	7.0753-4

AL2O3(L)	4.5142-4	5.9178-4	7.0701-4	7.0940-4	0.0000 0
BO	9.511 -9	3.618 -9	1.0059-10	7.572-11	5.279-11
BO2	1.1429-7	5.8813-8	4.3448-9	3.3292-9	2.6416-9
BO2-	2.3600-7	1.7960-7	4.5269-8	3.8478-8	3.3061-8
CH2O	1.102 -9	4.350-10	1.717-11	1.334-11	9.198-12
CO	6.8750-2	5.6559-2	2.7256-2	2.5643-2	2.2792-2
COB	2.5490-8	1.3446-8	1.9422-9	1.7350-9	1.2829-9
CO2	1.1330-1	1.2726-1	1.6037-1	1.6218-1	1.6457-1
CO2-	1.2274-7	6.1561-8	3.0914-9	2.2980-9	1.7868-9
CO3-	1.646 -9	7.507-10	2.296-11	1.602-11	1.195-11
CA	1.2094-5	8.1913-6	1.8086-7	1.2555-7	8.3328-8
CACL	8.077 -9	5.548 -9	1.134-10	7.798-11	5.232-11
CAF	1.3825-7	1.1827-7	5.3238-9	3.9332-9	2.8383-9
CAF2	9.879-10	1.213 -9	1.866-10	1.539-10	1.256-10
CAO(S)	0.0000 0	5.0954-5	7.9284-4	8.0599-4	8.1639-4
CAO	1.2236-5	7.6609-6	1.0030-7	7.1111-8	4.8063-8
CAOH	4.8797-4	4.3007-4	2.2528-5	1.6969-5	1.2604-5
CAOH+	6.853 -9	2.607 -9	7.554-12	4.397-12	2.604-12
CAO2H2	3.1130-4	3.3475-4	3.3311-5	2.6697-5	2.1630-5
CL	1.6034-7	9.6441-8	1.1924-8	9.5574-9	7.9139-9
CL-	5.8687-8	4.4995-8	1.0968-8	9.2644-9	7.9165-9
E	4.3510-5	3.3583-5	1.0046-5	8.7084-6	7.5274-6
F	2.998 -8	1.623 -8	1.346 -9	1.039 -9	8.331-10
F-	4.292 -9	2.787 -9	3.705-10	2.958-10	2.405-10
FE	1.3424-4	1.0144-4	5.5083-6	4.1153-6	3.4680-6
FEO	1.3690-4	1.0977-4	5.9377-6	4.3525-6	3.8815-6
FEO-	3.591 -8	2.091 -8	2.760-10	1.759-10	1.341-10
FEO2	2.3386-5	2.0450-5	1.2310-6	8.9534-7	8.4026-7
FEO2-	3.8550-6	3.4349-6	1.7793-7	1.2644-7	1.1388-7
FEO2H2	2.0124-5	2.1225-5	3.2430-6	2.6795-6	2.6432-6
FE3O4(L)	1.8734-6	2.3621-5	1.0396-4	1.0738-4	1.0791-4
H	2.9780-3	1.9675-3	4.3340-4	3.7442-4	3.1705-4
H-	2.799 -8	1.184 -8	3.519-10	2.510-10	1.737-10
HBO2	5.0324-7	3.7452-7	1.1931-7	1.0664-7	9.4505-8
HCL	3.7288-7	2.7467-7	7.9273-8	7.0013-8	6.1328-8
HCN	3.547 -9	1.179 -9	2.843-11	2.135-11	1.388-11
HCO	1.075 -7	4.099 -8	1.267 -9	9.430-10	6.473-10
HCO3-	9.702 -9	6.358 -9	7.923-10	6.428-10	5.336-10
HF	9.5669-6	9.1026-6	6.6548-6	6.3954-6	6.0978-6
HK	7.6288-6	4.7827-6	9.4389-7	8.2625-7	6.9386-7
HKCO	6.456 -9	2.674 -9	1.179-10	9.199-11	6.571-11
HKO	9.2570-7	4.4427-7	2.4704-8	1.8692-8	1.4803-8
HKO2	9.7087-8	4.8351-8	2.5362-9	1.8770-9	1.5514-9
HO2	3.6967-6	1.9361-6	1.1502-7	8.5559-8	7.0086-8
H2	4.7257-3	3.0000-3	2.0072-3	1.9949-3	1.7931-3
H2O	5.4224-2	5.7732-2	6.5059-2	6.5307-2	6.5727-2
H2O2	2.0066-7	1.4975-7	1.0711-8	8.2074-9	6.7931-9
H2S	4.1653-8	2.2532-8	3.9141-9	3.5726-9	2.6869-9
HS-	1.094 -8	5.110 -9	3.737-10	3.060-10	2.110-10
K	5.6585-3	5.6361-3	5.6191-3	5.6028-3	5.5139-3
K+	7.8196-5	5.1454-5	1.3712-5	1.2217-5	1.1010-5
K-	1.941 -8	1.130 -8	1.238 -9	9.975-10	7.863-10
KBO2	1.6513-5	1.6926-5	1.7739-5	1.7778-5	1.7817-5
KCN	2.993 -9	1.200 -9	5.774-11	4.641-11	3.246-11
KCL	3.6359-6	3.8531-6	4.2618-6	4.2800-6	4.2963-6
KF	6.1166-6	6.9655-6	9.9793-6	1.0254-5	1.0567-5
KO	2.1690-4	1.5315-4	3.4386-5	2.9349-5	2.6548-5
KO-	2.2020-7	1.4022-7	1.5090-8	1.1922-8	9.8302-9
KOH	4.2295-3	4.4434-3	4.8304-3	4.8640-3	4.9678-3
KOH+	1.801 -9	5.932-10	9.302-12	6.394-12	4.620-12
K2	2.1604-7	1.4220-7	3.3708-8	3.0215-8	2.6235-8
K2O2H2	3.7540-9	3.8342-9	3.0131-9	3.9132-9	4.0941-9
LI	2.1654-6	1.7655-6	8.6401-7	8.0406-7	7.3251-7
LIBO2	3.1680-8	2.9020-8	2.3930-8	2.2932-8	2.2065-8

NABO2	3.0005-7	3.0775-7	3.1921-7	3.1982-7	3.2252-7
LICL	5.7837-9	5.7667-9	5.2453-9	5.1619-9	5.0131-9
LIF	3.4459-8	4.6246-8	6.5293-8	6.7717-8	6.9435-8
LIH	1.134 -8	6.714 -9	1.107 -9	9.510-10	7.729-10
LIO	3.7454-7	2.5323-7	4.9894-8	4.1976-8	3.6942-8
LIOH	1.7969-5	1.8691-5	2.0215-5	2.0302-5	2.0402-5
MG	4.7394-5	1.7688-5	2.9052-7	2.2130-7	2.3446-7
MGF	1.256 -8	4.737 -9	7.553-11	5.548-11	5.930-11
MGH	1.070 -7	4.521 -8	1.746-10	1.151-10	1.052-10
MGN	2.355 -8	4.639 -9	7.868-12	4.776-12	4.165-12
MGO	1.3203-4	4.8123-5	6.2342-7	4.4202-7	4.8003-7
MGOH	5.3176-5	2.3569-5	6.9985-7	5.4740-7	6.2748-7
MGO2H2	1.2606-5	6.2173-6	2.5002-7	2.0171-7	2.4407-7
MGSIO3(L)	6.0061-5	2.1306-4	3.1315-4	3.1394-4	3.1410-4
N	2.0563-6	7.8061-7	2.1551-8	1.5254-8	1.1020-8
NCO	1.999 -9	6.055-10	7.594-12	5.174-12	3.368-12
NH	8.994 -8	3.105 -8	6.294-10	4.416-10	3.054-10
NH2	6.058 -8	2.888 -8	1.277 -9	9.811-10	7.138-10
NH3	1.236 -8	6.082 -9	5.738-10	4.825-10	3.691-10
NO	1.2814-2	8.5261-3	1.8305-3	1.5388-3	1.3963-3
NO-	1.520 -8	5.574 -9	8.325-11	5.421-11	3.785-11
NO2	5.0061-6	2.7763-6	1.9410-7	1.4456-7	1.2459-7
NO2-	5.398 -8	2.774 -8	1.174 -9	8.273-10	6.635-10
N2	6.9444-1	7.0299-1	7.2099-1	7.2188-1	7.2272-1
N2O	1.3981-6	7.5327-7	6.1434-8	4.7889-8	4.0273-8
NA	2.1989-4	2.2242-4	2.3435-4	2.3499-4	2.3403-4
NA+	1.2137-7	6.6671-8	8.9860-9	7.5227-9	6.4315-9
NACL	5.2991-8	5.5188-8	5.6896-8	5.5939-8	5.6143-8
NAF	8.1094-8	8.9980-8	1.1558-7	1.1765-7	1.2094-7
NAH	3.8436-7	2.5697-7	6.3547-8	5.0874-8	4.8976-8
NAO	7.7719-6	5.6817-6	1.4333-6	1.2373-6	1.1388-6
NAO-	6.974 -9	4.387 -9	5.089-10	4.051-10	3.386-10
NAOH	7.0161-5	7.1962-5	7.0751-5	7.0638-5	7.2815-5
O	4.0639-3	2.4646-3	2.8932-4	2.2379-4	1.9095-4
O-	8.9838-7	4.0397-7	1.2450-8	8.5616-9	6.3238-9
OH	1.0254-2	7.5352-3	1.9500-3	1.6783-3	1.5090-3
OH-	3.7147-6	2.2243-6	2.1616-7	1.6037-7	1.3506-7
O2	1.9026-2	1.5046-2	3.7840-3	3.1316-3	2.9965-3
O2-	1.0390-7	8.3293-8	2.1226-9	1.4005-9	1.0717-9
O3	4.768 -9	1.749 -9	2.068-11	1.268-11	9.722-12
PN	4.6861-8	2.8687-8	6.9686-9	6.4028-9	5.1979-9
PO	1.8945-6	1.3893-6	5.1402-7	4.7621-7	4.1706-7
PO2	1.7851-5	1.8284-5	1.8952-5	1.8975-5	1.9068-5
PO2-	1.9191-6	2.2207-6	2.9020-6	2.9405-6	2.9322-6
S	2.2056-6	1.1359-6	1.3593-7	1.1537-7	8.6996-8
S-	5.234 -9	2.323 -9	1.282-10	1.384-10	6.877-11
SH	4.8176-7	2.4525-7	3.0736-8	2.6694-8	1.9848-8
SN	3.119 -8	1.298 -8	7.042-10	5.628-10	3.990-10
SO	9.4755-5	6.7504-5	2.1721-5	1.9838-5	1.7895-5
SO-	3.418 -8	1.640 -8	9.761-10	7.557-10	5.459-10
SO2	8.6279-4	9.0000-4	9.6818-4	9.7113-4	9.7497-4
SO2-	1.5012-7	1.0657-7	2.1893-8	1.0667-8	1.5754-8
SO3	3.0561-7	2.7188-7	1.3236-7	1.2134-7	1.1919-7
SI	1.306 -9	3.522-10	4.452-13	2.292-13	1.287-13
SIC(S)	0.0000 0	0.0000 0	0.0000 0	0.0000 0	6.5785-4
SIO	1.9167-3	1.4740-3	7.2414-5	5.1306-5	4.1598-5
SIO2(L)	1.0679-4	4.5152-4	1.9807-3	2.0068-3	1.3621-3
SIO2	2.2345-4	1.9081-4	1.1373-5	8.0674-6	6.9798-6
SIS	1.316 -9	5.432-10	5.001-12	3.278-12	2.020-12

SPECIES IN SOLUTION AT LAST STATION
FE3O4(L) MGSIO3(L) SIO2(L)

ADDITIONAL PRODUCTS WHICH WERE CONSIDERED BUT WHOSE MOLE FRACTIONS WERE LESS THAN 0.10000E-08 FOR ALL ASSIGNED CONDITIONS

AL(S)	AL(L)	AL+	ALBO2	ALCL	ALCL+	ALCLF	ALCLF2	ALCL2	ALCL2+
ALCL2-	ALCL2F	ALCL3(S)	ALCL3(L)	ALCL3	ALF+	ALF2	ALF2+	ALF2-	ALF3(S)
ALF3(S)	ALF3	ALN	ALN(S)	ALN	ALO+	ALOH+	ALOH-	AL2CL6	AL2F6
AL2O	AL2O+	AL2O2	AL2O3+	AL6O13SI2	ALS	B(S)	B(L)	B	B+
BCL	BCL+	BCLF	BCLO	BCL2	BCL2+	BCL2-	BCL2N	BCL3	BF
BF2	BF2+	BF2-	BF3	BN	BNF2	BN2	BN2O2	BN3	BN(S)
BN	BO-	BOCL	BOF	BOF2	BS	B2	B2O	B2O2	B2O3(L)
B2O3	B3O3CL3	B3O3F3	C(S)	C	C+	C-	CAL	CB	C3-
C2N-	CCL	CCL2	CCL3	CCL4	CF	CF+	CF2	CF2+	CF3
CF3+	CF4	CH	CH+	CH2	CH3	CH4	CHCL	CN	CN+
CN-	CNN	CN2	COCL	COCL2	COF	COF2	CO6-	CO4-	CP
CS	CS-	CS2	C2	C2-	C2CL2	C2F2	C2F4	C2H	C2HF
C2H2	C2H4	C2H6	C2N	C2N2	C2O	C3	C3O2	C4	C5
CA(S)	CA(S)	CA(L)	CA+	CACO3(S)	CACO3(S)	CACL2(S)	CACL2(L)	CACL2	CAF2(S)
CAF2(S)	CAF2(L)	CAO(L)	CAO2H2(S)	CAS(S)	CASO4(S)	CL+	CLCN	CLF	CLF3
CLNO	CLO	CLO-	CLO2	CLO2-	CLP	CL2	CL2O	PCN	PO
PO2	P2	P2O	PE(S)	PE(S)	PE(S)	PE(L)	PECL	PECL2(S)	PECL2(L)
PECL2	PECL3(S)	PECL3(L)	PECL3	PEO(S)	PEO(L)	PEO2H2(S)	PEO3H3(S)	PES(S)	PES(S)
PES(S)	PESO4(S)	PES2(S)	PE2CL4	PE2O3(S)	PE2O3(L)	PE2SI3O12(S)	PE3O4(S)	H+	HALO
HBO	HBO+	HBS	HBS+	HCO+	HCP	HNO3	HOF	HSO3F	H2O(S)
H2O(L)	H2P	H2SO4(L)	H2SO4	H3B3O6	H3O+	HP-	HSI-	K(S)	K(L)
KCL(S)	KCL(L)	KF(S)	KF(L)	KF2-	KHF2(S)	KHF2(S)	KHF2(L)	K2CO3(S)	K2CO3(L)
K2F2	KOH(S)	KOH(S)	KOH(L)	K2O(S)	K2SO4(S)	K2SO4(S)	K2SO4(L)	LI(S)	LI(L)
LI+	LI-	NA-	LICL(S)	LICL(L)	LIF(S)	LIF(L)	LIF2-	LIFO	LIN(S)
LIN(L)	LIN	LINAO	LIO-	LIOH(S)	LIOH(L)	LIOH+	LI3CL3	LI2	LI2CL2
LI2F2	LI2O(S)	LI2O(L)	LI2O	LI2O2	LI2O2H2	LI3F3	MGCL2	MG(S)	MG(L)
MG+	MGCO3(S)	MGCL	MGCL+	MGCLF	MGCL2(S)	MGCL2(L)	MGSO4(S)	MGF2(S)	MGF2(L)
MGF2	MGO(S)	MGO(L)	MGOH+	MGS(S)	MGS	MF2	MF3	MGSIO3(S)	MGSIO3(S)
MGSIO3(S)	MG2P4	MG2SIO4(S)	MG2SIO4(L)	MF	MN2N4	MN2O+	MN2O4	MNO	MOF
MOF3	MO2CL	MO2F	MO3	MO3-	MAF(S)	MAF(L)	MAF2-	MAOH(S)	MAOH(L)
MA(S)	MA(L)	MACL(S)	MACL(L)	MA2CL2	MA2F2	MA2O(S)	MA2O(S)	MA2O(L)	MA2O2H2
MA2	MA2CO3(S)	MA2CO3(S)	MA2CO3(L)	MA2SO4	O+	OH+	P	P(S)	P+
MA2SO4(S)	MA2SO4(S)	MA2SO4(S)	MA2SO4(L)	PN	PN3	PO-	PS	P2	P4
P-	PCL3	PF3	PF5	SF4	SF6	SOF2	SO2CL2	SO2CLF	SO2F2
S(S)	S(L)	S+	SF4	SI(S)	SI(L)	SI+	SI-	SIC	SIC2
S2	S2-	SS	SI(S)	SIF2	SIF2	SIF3	SIF4	SIN	SIN+
SICL2	SICL3	SICL4	SIF	SIO2(S)	SIO2(S)	SIO2(S)	SIC	SIN2N	SIN4
SIN	SIO2(S)	SIO2(S)	SIO2(S)	SI2	SI2C	SI2N	SI3		

NOTE. WEIGHT FRACTION OF FUEL IN TOTAL FUELS AND OF OXIDANT IN TOTAL OXIDANTS

CASE 2137 INPUT

```
REACTANTS                                                                                                                  PAGE 0001

REACTANTS
C 5.74466H 4.46442N 0.07139S 0.03119O 0.90628 0.73279  -38252.0S  298.00F      0.0
S10.74894FE0.1052AL0.45115MG0.09923O 2.43164 0.06546 -27800 2.0S  298.00F      0.0
CA0.26748B 0.00575P 0.00750 0.29371          0.01278  -42710.0S  298.00F      0.0
K 0.01486NA0.096810 0.05583                  0.00301   -5480.4S  298.00F      0.0
LI0.02681CL0.00142F 0.00540                  0.00016    -934.8S  298.00F      0.0
K 2.00000C 1.00000O 3.00000                  0.18580 -27490 0.0S  298.00F      0.0
N 2.00000                                    0.76539   12552.7G 1900.00O      0.0
O 2.00000                                    0.23461   13240.1G 1900.00O      0.0

OMIT            AL2O5SI(S) K
NAMELISTS
 $INPT2   KASE=2137,P(1)=6.,ERATIO=T,MIX(1)=1.05,DXI=.25,RKT=T,
  IONS=T,TRACE=1.E-9,NEQL=F,BZ=5.,XK=.75,ACCURC=1.0E-3,RMIN=1.0E-30,
      NEQL=T $END
 $RKTINP  PCP(1)=3.2,FROZ=F,NEQPT=4  $END
DLIT            AL2O3(S)        AL2O3(L)        SIO2            SIO2(L)

REACTANTS   1.0SIO          1.0OH
PRODUCTS    1.0SIO2         1.0H
KFRR         3.0E-13   0.0         0.0
REACTANTS   2.0SIO2         1.0THIRD BODY
PRODUCTS    2.0SIO2(L)      1.0THIRD BODY
KFRR         1.0E-30   -1.0       0.0

STOP
```

CASE 2137 OUTPUT

```
REACTANTS
C    5.7447  H    4.4644  N    0.0714  S    0.0312  O    0.9063    0.732790    -38252.00  S    298.000  0  P    0.00000
SI   0.7489  FE   0.1052  AL   0.4511  MG   0.0992  O    2.4316    0.065460   -278002.00  S    298.000  0  P    0.00000
CA   0.2675  B    0.0057  P    0.0070  O    0.2537       0.0000    0.012780    -42710.00  S    298.000  0  P    0.00000
K    0.0149  NA   0.0968  O    0.0558       0.0000       0.0000    0.003010     -5400.40  S    298.000  0  P    0.00000
LI   0.0068  CL   0.0014  F    0.0054       0.0000       0.0000    0.000160      -934.00  S    298.000  0  P    0.00000
K    2.0000  C    1.0000  O    3.0000       0.0000       0.0000    0.185000   -274900.00  S    298.000  0  P    0.00000
N    2.0000       0.0000       0.0000       0.0000       0.0000    0.765390     12552.70  G   1900.000  0  O    0.00000
O    2.0000       0.0000       0.0000       0.0000       0.0000    0.234610     13240.10  G   1900.000  0  O    0.00000
OMIT            AL2O5SI(S) K
NAMELISTS
```

```
$INPT2
KASE  =      2137,
T     = 0.000000    , 0.000000    , 0.000000    , 0.000000    ,
 0.000000    , 0.000000    , 0.000000    , 0.000000    , 0.000000    ,
 0.000000    , 0.000000    , 0.000000    , 0.000000    , 0.000000    ,
 0.000000    , 0.000000    , 0.000000    , 0.000000    , 0.000000    ,
 0.000000    , 0.000000    , 0.000000    , 0.000000    , 0.000000    ,
 0.000000    , 0.000000    ,
P     =  6.00000    , 0.000000    , 0.000000    , 0.000000    ,
 0.000000    , 0.000000    , 0.000000    , 0.000000    , 0.000000    ,
 0.000000    , 0.000000    , 0.000000    , 0.000000    , 0.000000    ,
 0.000000    , 0.000000    , 0.000000    , 0.000000    , 0.000000    ,
 0.000000    , 0.000000    , 0.000000    , 0.000000    , 0.000000    ,
 0.000000    , 0.000000    ,
PSIA  = F,
MMHG  = F,
NSCM  = F,
V     = 0.000000    , 0.000000    , 0.000000    , 0.000000    ,
 0.000000    , 0.000000    , 0.000000    , 0.000000    , 0.000000    ,
 0.000000    , 0.000000    , 0.000000    , 0.000000    ,
RHO   =  6.00000    , 0.000000    , 0.000000    , 0.000000    ,
 0.000000    , 0.000000    , 0.000000    , 0.000000    , 0.000000    ,
 0.000000    , 0.000000    , 0.000000    , 0.000000    , 0.000000    ,
 0.000000    , 0.000000    , 0.000000    , 0.000000    , 0.000000    ,
 0.000000    , 0.000000    , 0.000000    , 0.000000    , 0.000000    ,
 0.000000    , 0.000000    ,
ERATIO= T,
OF    = F,
FPCT  = F,
FA    = F,
MIX   =  1.05000    , 0.000000    , 0.000000    , 0.000000    ,
 0.000000    , 0.000000    , 0.000000    , 0.000000    , 0.000000    ,
 0.000000    , 0.000000    , 0.000000    , 0.000000    , 0.000000    ,
 0.000000    ,
TP    = F,
HP    = F,
SP    = F,
TV    = F,
UV    = F,
SV    = F,
RKT   = T,
SHOCK = F,
DETN  = F,
OTTO  = F,
CR    = 0.000000    ,
AS    = 0.000000    ,
SO    = 0.000000    ,
IONS  = T,
IDEBUG=          0,
TRACE = 0.100030E-00,
SIUNIT= F,
EOPGM = 0.000000    , 0.000000    , 0.000000    , 0.000000    ,
 0.000000    , 0.000000    , 0.000000    , 0.000000    , 0.000000    ,
 0.000000    ,
EP    = F,
DXI   = 0.250000    ,
NITER =          0,
NSTOP =          0,
NBOL  = T,
BE    =  5.00000    ,
XK    = 0.750000    ,
ACCURC= 0.100000E-02,
EMIN  = 0.100000E-29,
```

```
$END
LLMT *
                C
                H
                N
                S
                O
                SI
                FE
                AL
                MG
                CA
                B
                P
                K
                NA
                LI
                CL
                F

SPECIES BEING CONSIDERED IN THIS SYSTEM
    J12/65  AL(B)          J12/65  AL(L)          J12/65  AL          J 6/65  AL+          J 6/66  ALBO2
    J 6/7#  ALCL           J 6/7#  ALCL+          J 9/64  ALCLF       J 9/64  ALCLF2       J 6/72  ALCL2
    J 6/72  ALCL2+         J 6/72  ALCL2-         J 9/64  ALCL2F      J 6/7#  ALCL3(B)     J 6/7#  ALCL3(L)
    J 6/7#  ALCL3          J 6/69  ALF            J 6/68  ALF+        J 6/72  ALF2         J 6/72  ALF2+
    J 6/72  ALF2-          J 6/7#  ALF3(B)        J 6/7#  ALF3(S)     J 6/7#  ALF3         J 6/63  ALH
    J12/62  ALN(S)         J 3/67  ALN            J 6/7#  ALO        J 6/7#  ALO+         J 12/7  ALO-
    J 9/64  ALOCL          J 3/64  ALOF           J12/67  ALOH        J12/67  ALOH+        J12/67  ALOH-
    J12/69  ALO2           3/8/7   ALO2-          J12/68  ALO2H       3/9/7   ALO2H2       J 6/7#  AL2CL6
    J 6/7#  AL2F6          J 6/72  AL2O           J 6/72  AL2O+       J 9/65  AL2O2        J 6/68  AL2O2+
    J 6/72  AL2O3(S)       J 6/72  AL2O3(L)       4/13/7  AL6O13SI2   3/8/7   ALS          J12/64  B(B)
    J12/64  B(L)           J12/64  B              J12/7#  B+          J12/64  BCL          J 6/66  BCL+
    J12/64  BCLF           3/8/7   BCLO           J 6/72  BCL2        J12/7#  BCL2+        J 6/72  BCL2-
    4/13/7  BCL2H          J12/64  BCL3           J12/64  BF          J 6/72  BF2          J12/7#  BF2+
    J 6/72  BF2-           J 6/69  BF3            J12/64  BH          J12/65  BHF2         J12/64  BH2
    3/8/7   BH2O2          J12/64  BH3            J 6/66  BN(B)       J 6/66  BN          3/3/7   BO-
    J 6/68  BO             J 3/65  BOCL           J 3/65  BOF         J12/66  BOF2         J 6/68  BO2
    J12/68  BO2-           J 6/72  BS             J12/64  B2          J 6/66  B2O          J12/64  B2O2
    J 6/71  B2O3(L)        J 6/71  B2O3           J 3/65  B3O3CL3     J 3/65  B3O3F3       J 3/61  C(B)
    J 3/61  C              L12/66  C+             J 9/65  C-          3/8/7   CAL          3/8/7   CB
    3/3/7   C3-            3/3/7   C2H-           J12/69  CCL         J12/68  CCL2         J 6/7#  CCL3
    J12/68  CCL4           J 6/7#  CF             J12/7#  CF+         J 6/7#  CF2          J12/7#  CF2+
    J 6/69  CF3            J12/71  CF3+           J 6/69  CF4         J12/67  CH           J12/71  CH+
    J12/72  CH2            J 3/61  CH2O           J 6/69  CH3         J 3/61  CH4          3/8/7   CHCL
    J 6/69  CN             J12/7#  CN+            J12/7#  CN-         J 6/66  CNN          J12/7#  CN2
    J 9/65  CO             J12/65  COCL           J 6/61  COCL2       J12/65  COF          J12/69  COF2
    J 3/61  COS            3/3/7   COS-           J 9/65  CO2         4/12/7  CO2-         3/3/7   CO3-
    3/7/7   CO4-           J 6/62  CP             J12/62  CS          3/3/7   CS-          J 6/61  CS2
    J12/69  C2             J12/69  C2-            J12/68  C2CL2       J12/67  C2F2         J 6/69  C2F4
    J 3/67  C2H            J12/67  C2HF           J 3/61  C2H2        J 9/65  C2H4         L 5/72  C2H6
    J 3/67  C2N            J 3/61  C2N2           J 9/66  C2O         J12/69  C3           J 6/68  C3O2
    J12/69  C4             J12/69  C5             J12/68  CA(B)       J12/68  CA(B)        J12/68  CA(L)
    J12/68  CA             J12/7#  CA+            BAR 73  CACO3(B)    BAR 73  CACO3(B)     J 6/7#  CACL
    J 6/7#  CACL2(B)       J 6/7#  CACL2(L)       J 6/7#  CACL2       J12/68  CAF          J12/68  CAF2(B)
    J12/68  CAF2(B)        J12/68  CAF2(L)        J12/68  CAF2        J 6/71  CAO(B)       J 6/71  CAO(L)
    J12/74  CAO            J 6/7#  CAOH           J 6/7#  CAOH+       J12/71  CAO2H2(B)    J 12/7  CAO2H2
    J12/71  CAS(B)         BAR 73  CASO4(B)       J 6/72  CL          J 6/65  CL+          J 6/65  CL-
    J 6/66  CLCN           J 9/65  CLF            J 9/65  CLF3        3/8/7   CLHO         J 6/61  CLO
    3/3/7   CLO-           J 3/61  CLO2           3/3/7   CLO2-       3/8/7   CLP          J 9/65  CL2
    J12/65  CL2O           L#2/67  E              J 9/65  F           J12/71  F-           J 6/69  FCN
    J12/66  FO             J 9/66  FO2            J12/68  F2          J12/69  F2O          J 3/65  FE(B)
    J 3/65  FE(S)          J 3/65  FE(B)          J 3/65  FE(L)       J 3/65  FE           J 6/65  FECL
    J12/7#  FECL2(S)       J12/7#  FECL2(L)       J12/7#  FECL2       J 6/65  FECL3(S)     J 6/65  FECL3(L)
    J 6/65  FECL3          J 6/65  FEO(S)         J 6/65  FEO(L)      J 9/66  FEO          4/13/7  FEO-
```

4/20/7	FEO2	4/13/7	FEO2-	J 6/66	FFO2N2(B)	J12/66	FEO2H2	J 6/66	FE[illegible](B)
BAR 73	FES(B)	BAR 73	FES(B)	BAR 73	FES(B)	J 6/66	FESO4(B)	BAR 73	FE[illegible](B)
J12/70	FE2CL4	J 6/65	FE2O3(B)	20/7	FE2O3(L)	9/20/7	FE3O4(L)	J 6/66	FE[illegible]O12(B)
J 6/65	FE3O4(B)	J 9/65	H	J 6/66	H+	J 9/65	H	J 3/66	HALO
3/8/7	HBO	3/8/7	HBO+	J12/64	HBO2	J12/75	HBR	J12/75	HBR+
J 9/64	HCL	L12/68	HCN	J12/70	HCO	J12/70	HCO+	3/8/7	HCO3
J12/69	HCP	J12/68	HF	3/8/7	HK	J12/70	HNCO	J 3/63	HNO
J 6/63	HNO2	J 6/63	HNO3	J12/72	HOF	J 3/64	HO2	J 6/72	HSO3F
J 3/61	H2	L11/65	H2O(B)	L11/65	H2O(L)	J 3/61	H2O	L 2/69	H2O2
3/8/7	H2P	J12/65	H2S	J12/66	H2SO4(L)	J12/66	H3BO4	J12/64	H3BO6
3/25/7	H3O+	3/3/7	HP-	3/3/7	HS-	3/3/7	HSI-	J12/61	K(B)
J12/61	K(L)	J 6/62	K	J 3/65	K+	3/3/7	K	J 6/71	KBO2
3/8/7	KCN	J 3/66	KCL(B)	J 3/66	KCL(L)	J 3/66	KCL	J 6/69	KF(B)
J 6/69	KF(L)	J 6/69	KF	J12/68	KF2-	J 6/71	KHF2(B)	J 6/71	KHF2(B)
J 6/71	KHF2(L)	J 3/66	K2CO3(B)	J 3/66	K2CO3(L)	J 6/69	K2F2	J12/67	KO
J12/67	KO-	J12/70	KOH	J12/70	KOH(B)	J12/70	KOH(B)	J12/70	KOH(L)
J12/71	KOH+	J12/61	K2	J12/70	K2O2H2	J 6/63	K2O(B)	J12/71	K2SO4(B)
J12/71	K2SO4(B)	J12/71	K2SO4(L)	J 6/62	LI(B)	J 6/62	LI(L)	J 6/62	LI
J 3/65	LI+	3/3/7	LI-	J 6/71	LIBO2	3/3/7	NA-	J 6/71	KLBO2
J 6/62	LICL(B)	J 6/62	LICL(L)	J 6/62	LICL	J12/68	LIF(B)	J12/68	LIF(L)
J12/68	LIF	J12/68	LIF2-	J 9/65	LIFO	J 9/67	LIH(B)	J 9/67	LIH(L)
J 9/67	LIH	J12/66	LIN	7/8/7	LINAO	J 3/66	LIO	J12/67	LIO-
J 6/71	LIOH(B)	J 6/71	LIOH(L)	J 6/71	LIOH	J12/71	LIOH+	J 9/66	LIOH
J 6/62	LI2	J 6/62	LI2CL2	J12/68	LI2F2	J 3/64	LI2O(B)	J 3/64	LI2O(L)
J 3/64	LI2O	J 3/64	LI2O2	J 6/71	LI2O2N2	J 6/62	LI3CL3	J12/68	LI3F3
J 9/62	MG(B)	J 9/62	MG(L)	J 9/62	MG	J12/70	MG+	J12/66	MGCO3(B)
J 3/66	MGCL	J 6/68	MGCL+	J 3/66	MGCLF	J12/65	MGCL2(B)	J12/65	MGCL2(L)
J12/69	MGCL2	J 3/67	MGF	J 3/66	MGF2(B)	J 3/66	MGF2(L)	J 3/66	MGF2
J12/66	MGH	J 3/64	MGN	J12/65	MGO(B)	J12/65	MGO(L)	J12/65	MGO
J 6/67	MGOH	J 6/68	MGOH+	J 6/67	MGO2H2	J 6/71	MGS(B)	J 6/71	MGS
L 7/76	MGSO4(B)	L 7/76	MGTO4(L)	J12/67	MGSIO3(B)	J12/67	MGSIO3(B)	J12/67	MGSIO3(B)
J12/67	MGSIO3(L)	J12/75	MG2F4	J12/67	MG2SIO4(B)	J12/67	MG2SIO4(L)	J 3/61	N
J 6/65	NF	J12/70	NCO	J 3/64	NF2	J 6/69	NF3	J12/71	NH
J12/65	NH2	J 9/65	NH3	J 6/63	NO	3/3/7	NO-	J12/72	NOCL
J 6/66	NO+	J 6/61	NOF	J 6/70	NOF3	J 9/64	NO2	J 6/72	NO2-
J12/65	NO2CL	J12/65	NO2F	J12/64	NO3	3/3/7	NO3-	J 9/65	N2
J12/65	N2H4	J12/64	N2O	J12/70	N2O+	J 9/64	N2O4	J12/64	N2O5
J12/70	N3	J 6/62	NA(B)	J 6/62	NA(L)	J 6/62	NA	J 9/65	NA+
J 9/64	NACL(B)	J 9/64	NACL(L)	J12/64	NACL	J12/68	NAF(B)	J12/68	NAF(L)
J12/68	NAF	J12/68	NAF2-	J 3/63	NAN	J12/67	NAO	J12/67	NAO-
J12/70	NAOH(B)	J12/70	NAOH(L)	J12/70	NAOH	J12/71	NAOH+	J 6/62	NA2
J 3/66	NA2CO3(B)	J 3/66	NA2CO3(B)	J 3/66	NA2CO3(L)	J12/64	NA2CL2	J12/68	NA2F2
J 6/68	NA2O(B)	J 6/68	NA2O(B)	J 6/68	NA2O(L)	J12/70	NA2O2H2	J12/66	NA2SO4(B)
J12/66	NA2SO4(B)	J12/66	NA2SO4(B)	J12/66	NA2SO4(L)	H11/74	NA2SO4	J 6/62	O
L12/66	O+	J 6/65	O-	J12/70	OH	J12/70	OH+	J12/70	OH
J 9/65	O2	J12/66	O2-	J 6/61	O3	J 6/62	P	J 6/61	P(B)
L12/66	P+	3/3/7	P-	J 6/70	PCL3	J12/69	PF3	J12/69	PF5
J 6/67	PH	J 6/62	PH3	J 9/62	PN	J 6/71	PO	3/3/7	PO-
3/7/7	PO2	3/3/7	PO2-	J 6/67	PB	J 6/61	P2	J 6/61	P4
J12/65	S(B)	J12/65	S(L)	J 6/71	S	L12/66	S+	3/3/7	S-
J12/69	SF4	J 9/65	SF6	J 6/67	SN	J 6/61	SN	J 6/71	SO
3/3/7	SO-	J 6/72	SOF2	J 6/61	SO2	3/3/7	SO2-	J 6/71	SO2CL2
J 6/71	SO2CLF	J 6/71	SO2F2	J 9/65	SO3	3/3/7	SO3-	J12/65	S2
3/3/7	S2-	J6/64	SB	J 3/67	SI(B)	J 3/67	SI(L)	J 3/67	SI
J12/71	SI+	3/3/7	SI-	J 3/67	SIC	4/25/7	SIC(B)	J 4/67	SIC2
J 9/67	SICL	J12/70	SICL2	J12/69	SICL3	J12/70	SICL4	J12/69	SIF
J12/68	SIF2	J 6/70	SIF3	J 9/63	SIF4	J12/69	SIN	J12/71	SIN+
J12/68	SIN4	J 3/67	SIN	J 9/67	SIO	J 6/67	SIO2(B)	J 6/67	SIO2(B)
J 6/67	SIO2(B)	J 6/67	SIO2(L)	J 9/67	SIO2	J12/71	SIR	J 3/67	SI2
J 3/67	SI2C	J 3/67	SI2N	J 3/67	SI3				

513 18 130 67 # 0 667

C
N
N

```
        S
        O
        SI
        FE
        AL
        MG
        CA
        B
        P
        K
        NA
        LI
        CL
        F
        E
$RKTINP
EOL    = T,
FROZ   = F,
SUBAR = 0.000000    , 0.000000    , 0.000000    , 0.000000    ,
 0.000000    , 0.000000    , 0.000000    , 0.000000    , 0.000000    ,
 0.000000    , 0.000000    , 0.000000    , 0.000000    ,
SUPAR = 0.000000    , 0.000000    , 0.000000    , 0.000000    ,
 0.000000    , 0.000000    , 0.000000    , 0.000000    , 0.000000    ,
 0.000000    , 0.000000    , 0.000000    , 0.000000    ,
PCP    =  3.20000    , 0.000000    , 0.000000    , 0.000000    ,
 0.000000    , 0.000000    , 0.000000    , 0.000000    , 0.000000    ,
 0.000000    , 0.000000    , 0.000000    , 0.000000    , 0.000000    ,
 0.000000    , 0.000000    , 0.000000    , 0.000000    , 0.000000    ,
 0.000000    , 0.000000    , 0.000000    ,
TCEST =  3000.00
NFZ    =          1,
NEOPT =          4,
RKTO   = F,
$END

OF =    6.765485
                          EFFECTIVE FUEL          EFFECTIVE OXIDANT            MIXTURE
ENTHALPY                     HPP(2)                  HPP(1)                    HSUB0
(KG-MOL)(DEG K)/KG       -0.47671753E 03          0.22144238E 03           0.13153607E 03

KG-ATOMS/KG                  B0P(I,2)                B0P(I,1)                  B0(I)
      C                   0.48118025E-01          0.00000000E 00           0.61963964E-02
      H                   0.36349855E-01          0.00000000E 00           0.46809511E-02
      N                   0.58126613E-03          0.54644562E-01           0.47682561E-01
      S                   0.25395281E-03          0.00000000E 00           0.32702759E-04
      O                   0.13676232E-01          0.14663674E-01           0.14536515E-01
      SI                  0.60977309E-03          0.00000000E 00           0.78523502E-04
      FE                  0.85651889E-04          0.00000000E 00           0.11029817E-04
      AL                  0.36731793E-03          0.00000000E 00           0.47301350E-04
      MG                  0.80791229E-04          0.00000000E 00           0.10403886E-04
      CA                  0.21772788E-03          0.00000000E 00           0.28037899E-04
      B                   0.46804826E-05          0.00000000E 00           0.60272885E-06
      P                   0.57386778E-05          0.00000000E 00           0.73899798E-06
      K                   0.27006865E-02          0.00000000E 00           0.34778076E-03
      NA                  0.78757424E-04          0.00000000E 00           0.10141983E-04
      LI                  0.54428519E-05          0.00000000E 00           0.70090300E-06
      CL                  0.11349266E-05          0.00000000E 00           0.14615011E-06
      F                   0.43159180E-05          0.00000000E 00           0.55578209E-06
      E                   0.00000000E 00          0.00000000E 00           0.00000000E 00

PT      C        H        N        S        O        SI       FE       AL       MG       CA       B        P        K        NA
   LI       CL       F        E
 1   -18.366  -12.133  -13.390  -23.485  -16.137  -23.466  -15.320  -22.951  -23.057  -24.082  -30.341  -28.214  -22.352  -24.021
  -24.633  -32.315  -34.943  -14.427   20.000
```

```
ADD AL2O3(L)
 1    -18.359  -12.125  -13.392  -23.478  -16.138  -23.464  -15.335  -23.857  -23.061  -24.085  -30.322  -28.224  -22.355  -24.027
   -24.637  -32.312  -34.903  -14.117    4.000

                                    ION NUMBER DENSITY AND CONDUCTIVITY AT POINT   1
     ION          DENS (M-3)          ION          DENS (M-3)          ION          DENS (M-3)          ION          DENS (M-3)

  1  CA+          8.133E 15       2  CAOH+        1.065E 17       3  K+           1.221E 21       4  KOH+         2.525E 16
  5  LI+          6.710E 15       6  NA+          1.893E 18

  1  ALO-         2.264E 19       2  ALOH-        3.414E 15       3  ALO2-        3.797E 20       4  BO-          4.075E 15
  5  BO2-         3.510E 18       6  CN-          6.801E 15       7  CO2-         1.826E 18       8  CO3-         2.455E 16
  9  CL-          8.732E 17      10  F-           6.358E 16      11  FEO-         5.455E 17      12  FEO2-        5.900E 19
 13  H-           4.131E 17      14  HCO3-        1.452E 17      15  HS-          1.615E 17      16  K-           2.883E 17
 17  KO-          3.403E 18      18  NA-          1.315E 16      19  NO-          2.252E 17      20  NO2-         8.052E 17
 21  NAO-         1.041E 17      22  O-           1.331E 19      23  OH-          5.520E 19      24  O2-          2.733E 18
 25  PO-          3.331E 15      26  PO2-         2.881E 19      27  S-           7.717E 16      28  SO-          5.060E 17
 29  SO2-         2.238E 18      30  SO3-         1.325E 16
CONDUCTIVITY = 14.2233  (MHO/M)

 2    -18.912  -12.401  -13.549  -23.856  -16.416  -23.772  -14.687  -25.075  -23.136  -24.378  -31.390  -28.620  -22.542  -24.143
   -24.848  -32.936  -35.751  -14.940    5.000
ADD CAO(S)
 2    -18.911  -12.401  -13.550  -23.856  -16.416  -23.772  -14.689  -25.072  -23.137  -24.483  -31.387  -28.619  -22.542  -24.144
   -24.848  -32.934  -35.749  -14.939    3.000

                                    ION NUMBER DENSITY AND CONDUCTIVITY AT POINT   2
     ION          DENS (M-3)          ION          DENS (M-3)          ION          DENS (M-3)          ION          DENS (M-3)

  1  CA+          1.321E 15       2  CAOH+        2.339E 16       3  K+           4.915E 20       4  KOH+         5.579E 15
  5  LI+          1.666E 15       6  NA+          6.340E 17

  1  ALO-         4.197E 18       2  ALO2-        1.078E 20       3  BO2-         1.567E 18       4  CN-          1.172E 15
  5  CO2-         5.362E 17       6  CO3-         6.669E 15       7  CL-          3.929E 17       8  F-           2.425E 16
  9  FEO-         2.362E 17      10  FEO2-        4.003E 19      11  H-           9.760E 16      12  HCO3-        5.698E 16
 13  HS-          4.330E 16      14  K-           9.802E 16      15  KO-          1.234E 18      16  NA-          4.622E 15
 17  NO-          4.782E 16      18  NO2-         2.447E 17      19  NAO-         3.879E 16      20  O-           3.460E 18
 21  OH-          1.936E 19      22  O2-          7.228E 17      23  PO2-         2.010E 19      24  S-           1.956E 16
 25  SO-          1.404E 17      26  SO2-         9.400E 17      27  SO3-         5.383E 15
CONDUCTIVITY = 10.7595  (MHO/M)

PC/PT= 1.740098   T=   2703.08
 2    -18.910  -12.400  -13.550  -23.855  -16.415  -23.771  -14.690  -25.071  -23.137  -24.482  -31.386  -28.619  -22.542  -24.143
   -24.848  -32.934  -35.749  -14.938    2.000

                                    ION NUMBER DENSITY AND CONDUCTIVITY AT POINT   2
     ION          DENS (M-3)          ION          DENS (M-3)          ION          DENS (M-3)          ION          DENS (M-3)

  1  CA+          1.324E 15       2  CAOH+        2.343E 16       3  K+           4.919E 20       4  KOH+         5.586E 15
  5  LI+          1.668E 15       6  NA+          6.346E 17

  1  ALO-         4.203E 18       2  ALO2-        1.079E 20       3  BO2-         1.568E 18       4  CN-          1.174E 15
  5  CO2-         5.368E 17       6  CO3-         6.677E 15       7  CL-          3.932E 17       8  F-           2.427E 16
  9  FEO-         2.364E 17      10  FEO2-        4.004E 19      11  H-           9.772E 16      12  HCO3-        5.702E 16
 13  HS-          4.334E 16      14  K-           9.811E 16      15  KO-          1.235E 18      16  NA-          4.626E 15
 17  NO-          4.789E 16      18  NO2-         2.449E 17      19  NAO-         3.882E 16      20  O-           3.464E 18
 21  OH-          1.938E 19      22  O2-          7.236E 17      23  PO2-         2.011E 19      24  S-           1.959E 16
 25  SO-          1.405E 17      26  SO2-         9.407E 17      27  SO3-         5.387E 15
CONDUCTIVITY = 10.7624  (MHO/M)

PC/PT= 1.739298   T=   2703.22
```

```
 3    -19.534  -12.715  -13.722  -24.258  -16.777  -24.081  -13.874  -26.546  -23.199  -25.749  -32.645  -29.027  -22.736  -24.246
   -25.088  -33.784  -36.777  -15.842    6.000
ADD MGSIO3(L)
 3    -19.521  -12.710  -13.725  -24.248  -16.777  -24.200  -13.896  -26.505  -25.184  -25.716  -32.610  -29.010  -22.739  -24.254
   -25.073  -33.692  -36.762  -15.825    5.000
ADD SIC(S)
 3    -19.559  -12.719  -13.728  -24.285  -16.746  -24.647  -13.948  -26.494  -24.722  -25.701  -32.614  -29.061  -22.751  -24.268
   -25.091  -33.669  -36.731  -15.808    4.000
ADD SIO2(L)
 3    -19.530  -12.712  -13.728  -24.255  -16.760  -24.669  -13.940  -26.465  -24.644  -25.681  -32.583  -29.032  -22.748  -24.267
   -25.084  -33.671  -36.734  -15.802    3.000
```

ION NUMBER DENSITY AND CONDUCTIVITY AT POINT 3

	ION	DENS (M-3)		ION	DENS (M-3)		ION	DENS (M-3)		ION	DENS (M-3)
1	CAOH+	2.050E 15	2	K+	1.830E 20	3	NA+	1.917E 17			
1	ALO-	5.797E 17	2	ALO2-	2.389E 19	3	BO2-	5.966E 17	4	CO2-	1.251E 17
5	CO3-	1.403E 15	6	CL-	1.492E 17	7	F-	7.671E 15	8	FEO-	8.725E 16
9	FEO2-	2.431E 19	10	H-	1.824E 16	11	HCO3-	1.853E 16	12	HS-	9.744E 15
13	K-	2.794E 16	14	KO-	3.721E 17	15	NA-	1.370E 15	16	NO-	7.754E 15
17	NO2-	5.877E 16	18	NAO-	1.209E 16	19	O-	6.998E 17	20	OH-	5.579E 18
21	O2-	1.464E 17	22	PO2-	1.297E 19	23	S-	4.078E 15	24	SO-	3.188E 16
25	SO2-	3.370E 17	26	SO3-	1.851E 15						

CONDUCTIVITY = 7.322E (MHO/M)

```
DLIT            AL2O3(S)        AL2O3(L)        SIO2            SIO2(L)

DIFFUN  -  X=   0.00000E-01    AVN=   1.6320E 26
REACTION  1     RATES  3.30000E-13  2.94090E 01    PRODS  2.16594E-18  6.36987E-09    POWERS  0.00000E-01  2.00000E 00
REACTION  2     RATES  3.95246E-34  1.00121E-37    PRODS  5.86989E-12  1.00594E-12    POWERS  0.00000E-01  3.00000E 00
    1  0.00000E-01  0.00002E-01      2  2.1040E-05  0.00007E-01      3  5.7002E-06 -1.7746E-08      4  1.3271E-05  1.7249E-08
    5  1.8998E 05 -6.0661E 04      6  9.1652E 03  2.2119E 01
ADD FE3O4(L)
REMOVE FE3O4(L)
ADD FE3O4(L)
 4    -19.611  -12.754  -13.756  -24.310  -16.802  -24.817  -13.957  -26.543  -24.780  -25.815  -32.719  -29.087  -22.782  -24.293
   -25.116  -33.760  -36.854  -15.905    3.000
```

ION NUMBER DENSITY AND CONDUCTIVITY AT POINT 4

	ION	DENS (M-3)		ION	DENS (M-3)		ION	DENS (M-3)		ION	DENS (M-3)
1	CAOH+	1.554E 15	2	K+	1.630E 20	3	NA+	1.664E 17			
1	ALO-	4.985E 17	2	ALO2-	2.162E 19	3	BO2-	5.298E 17	4	CO2-	1.039E 17
5	CO3-	1.149E 15	6	CL-	1.323E 17	7	F-	6.650E 15	8	FEO-	6.990E 16
9	FEO2-	2.055E 19	10	H-	1.492E 16	11	HCO3-	1.585E 16	12	HS-	8.066E 15
13	K-	2.388E 16	14	KO-	3.193E 17	15	NA-	1.175E 15	16	NO-	6.221E 15
17	NO2-	4.917E 16	18	NAO-	1.039E 16	19	O-	5.795E 17	20	OH-	4.779E 18
21	O2-	1.209E 17	22	PO2-	1.212E 19	23	S-	3.367E 15	24	SO-	2.651E 16
25	SO2-	2.944E 17	26	SO3-	1.686E 15						

CONDUCTIVITY = 7.0612 (MHO/M)

```
DIFFUN  -  X=   3.0299E-01    AVN=   1.4563E 26
REACTION  1     RATES  3.00000E-13  2.93622E 01    PRODS  1.75041E-18  5.08254E-09    POWERS  0.00000E-01  2.00000E 00
REACTION  2     RATES  3.99702E-34  5.65239E-08    PRODS  5.86602E-12  8.33154E-13    POWERS  0.00000E-01  3.00000E 00
    1  0.00000E-01  0.00000E-01      2  2.1040E-05  0.00000E-01      3  5.0035E-06 -1.9084E-06      4  1.3276E-05  1.0655E-08
    5  1.3739E 05 -5.7332E 04      6  9.1736E 03  2.2769E 01
 5    -19.697  -12.797  -13.784  -24.367  -16.847  -24.976  -13.987  -26.625  -24.924  -25.958  -32.862  -29.145  -22.816  -24.319
```

```
-25.151  -33.854  -36.9E0  -16.013    2.000

                                    ION NUMBER DENSITY AND CONDUCTIVITY AT POINT   5
    ION          DENS (M-3)          ION          DENS (M-3)          ION          DENS (M-3)          ION          DENS (M-3)

  1  CAOH+        1.157E 15       2  K+           1.441E 20       3  NA+          1.433E 17

  1  ALO-         4.250E 17       2  ALO2-        1.946E 19       3  BO2-         4.675E 17       4  CO2-         8.545E 16
  5  CL-          1.166E 17       6  F-           5.721E 15       7  FEO-         5.465E 16       8  FEO2-        1.701E 19
  9  H-           1.206E 16      10  HCO3-        1.345E 16      11  HS-          6.614E 15      12  K-           2.025E 16
 13  KO-          2.718E 17      14  NO-          4.929E 15      15  NO2-         4.074E 16      16  NAO-         8.868E 15
 17  O-           4.745E 17      18  OH-          4.059E 18      19  O2-          9.877E 16      20  PO2-         1.129E 19
 21  S-           2.752E 15      22  SO-          2.184E 16      23  SO2-         2.554E 17      24  SO3-         1.384E 15
CONDUCTIVITY =  6.7944  (MHO/M)


DIFFUN  -  X=   7.5898E-01    AVN=   1.2915E 26
REACTION  1    RATES  3.70000E-13  2.93132E 01    PRODS  1.37033E-10  3.95407E-09    POWERS  0.00000E-01  2.00000E 00
REACTION  2    RATES  4.04500E-34  2.95274E-08    PRODS  5.05995E-12  6.09404E-13    POWERS  0.00000E-01  3.00000E 00
    1  0.0000E-01  0.0000E-01      2  2.1040E-05  0.0000E-01      3  4.2824E 06 -1.8422E-06      4  1.3280E-05  6.2034E-09
    5  1.4646E 05 -5.3895E 04      6  9.1825E 03  2.4517E 01
 6    -19.787  -12.844  -13.814  -24.426  -16.895  -25.146  -14.018  -26.712  -25.077  -26.111  -33.014  -29.205  -22.853   24.346
  -25.187  -33.955  -37.114  -16.129    2.000

                                    ION NUMBER DENSITY AND CONDUCTIVITY AT POINT   6
    ION          DENS (M-3)          ION          DENS (M-3)          ION          DENS (M-3)          ION          DENS (M-3)

  1  K+           1.265E 20       2  NA+          1.223E 17

  1  ALO-         3.506E 17       2  ALO2-        1.740E 19       3  BO2-         4.092E 17       4  CO2-         6.944E 16
  5  CL-          1.019E 17       6  F-           4.874E 15       7  FEO-         4.205E 16       8  FEO2-        1.390E 19
  9  H-           9.627E 15      10  HCO3-        1.132E 16      11  HS-          5.365E 15      12  K-           1.701E 16
 13  KO-          2.292E 17      14  NO-          3.849E 15      15  NO2-         3.335E 16      16  NAO-         7.497E 15
 17  O-           3.835E 17      18  OH-          3.413E 18      19  O2-          7.960E 16      20  PO2-         1.049E 19
 21  S-           2.223E 15      22  SO-          1.778E 16      23  SO2-         2.198E 17      24  SO3-         1.182E 15
CONDUCTIVITY =  6.5163  (MHO/M)


DIFFUN  -  X=   1.0090E 00    AVN=   1.1866E 26
REACTION  1    RATES  3.00000E-13  2.92730E 01    PRODS  1.14461E-10  3.28344E-09    POWERS  0.00000E-01  2.00000E 00
REACTION  2    RATES  4.07969E-34  1.84898E-08    PRODS  5.85510E-12  4.83864E-13    POWERS  0.00000E-01  3.00000E 00
    1  0.0000E-01  0.0000E-01      2  2.1040E-05  0.0000E-01      3  3.8179E-06 -1.8077E-06      4  1.3281E-05  4.1933E-09
    5  1.3329E 05 -5.1460E 04      6  9.1888E 03  2.5752E 01
 7    -19.881  -12.893  -13.846  -24.488  -16.947  -25.329  -14.052  -26.805  -25.238  -26.273  -33.176  -29.268  -22.890  -24.374
  -25.225  -34.062  -37.257  -16.252    2.000

                                    ION NUMBER DENSITY AND CONDUCTIVITY AT POINT   7
    ION          DENS (M-3)          ION          DENS (M-3)          ION          DENS (M-3)          ION          DENS (M-3)

  1  K+           1.103E 20       2  NA+          1.034E 17

  1  ALO-         2.992E 17       2  ALO2-        1.543E 19       3  BO2-         3.551E 17       4  CO2-         5.572E 16
  5  CL-          8.828E 16       6  F-           4.109E 15       7  FEO-         3.179E 16       8  FEO2-        1.121E 19
  9  H-           7.574E 15      10  HCO3-        9.428E 15      11  HS-          4.302E 15      12  K-           1.413E 16
 13  KO-          1.913E 17      14  NO-          2.958E 15      15  NO2-         2.696E 16      16  NAO-         6.275E 15
 17  O-           3.056E 17      18  OH-          2.838E 18      19  O2-          6.322E 16      20  PO2-         9.702E 18
 21  S-           1.774E 15      22  SO-          1.430E 16      23  SO2-         1.875E 17      24  SO3-         1.001E 15
CONDUCTIVITY =  6.2235  (MHO/M)
```

```
DIFFUN  -  X=   1.259#E ##    AVN=   1.#857E 26
REACTION  1    RATES  3.#####E-13  2.92276E #1    PRODS  9.41124E-11  2.68#21E-#9    POWERS  #.#####E-#1  2.#####E ##
REACTION  2    RATES  4.11663E-34  1.12136E-#8    PRODS  5.24978E-12  3.76173E-13    POWERS  #.#####E-#1  3.#####E ##
    1  #.#####E-#1  #.#####E-#1     2  2.184#E-#5  #.#####E-#1     3  3.3681E-#6 -1.7343E-#6     4  1.3282E-#5  2.7544E-#9
    5  1.2#74E #5 -4.89#3E #4     6  9.1954E #3  2.7#6#E #1
 8    -19.981  -12.944  -13.878  -24.552  -17.##2  -25.527  -14.#88  -26.9#4  -25.4#9  -26.447  -33.349  -29.333  -22.929  -24.4#2
   -25.264  -34.176  -37.41#  -16.384    2.###
```

ION NUMBER DENSITY AND CONDUCTIVITY AT POINT 8

	ION	DENS (M-3)		ION	DENS (M-3)		ION	DENS (M-3)		ION	DENS (M-3)
1	K+	9.532E 19	2	NA+	8.661E 16						
1	ALO-	2.465E 17	2	ALO2-	1.358E 19	3	BO2-	3.#52E 17	4	CO2-	4.411E 16
5	CL-	7.574E 16	6	F-	3.426E 15	7	FEO-	2.357E 16	8	FEO2-	8.9#7E 18
9	N-	5.866E 15	1#	HCO3-	7.772E 15	11	NB-	3.4#7E 15	12	K-	1.161E 16
13	KO-	1.578E 17	14	NO-	2.235E 15	15	NO2-	2.149E 16	16	NAO-	5.195E 15
17	O-	2.397E 17	18	OH-	2.332E 18	19	O2-	4.941E 16	2#	PO2-	8.943E 18
21	S-	1.396E 15	22	SO-	1.135E 16	23	SO2-	1.585E 17			

CONDUCTIVITY = 5.9157 (MHO/M)

```
DIFFUN  -  X=   1.5#9#E ##    AVN=   9.8934E 25
REACTION  1    RATES  3.#####E-13  2.91764E #1    PRODS  7.6#815E-11  2.14618E-#9    POWERS  #.#####E-#1  2.#####E ##
REACTION  2    RATES  4.156#9E-34  6.56973E-#9    PRODS  5.8441#E-12  2.85942E-13    POWERS  #.#####E-#1  3.#####E ##
    1  #.#####E-#1  #.#####E-#1     2  2.184#E-#5  #.#####E-#1     3  2.938#E-#6 -1.6498E-#6     4  1.3282E-#5  1.755#E-#9
    5  1.8386E #5 -4.623#E #4     6  9.2#23E #3  2.8421E #1
 9    -2#.#86  -12.998  -13.912  -24.619  -17.#62  -25.74#  -14.127  -27.#1#  -25.589  -26.633  -33.533  -29.4#1  -22.969  -24.431
   -25.3#4  -34.299  -37.573  -16.525    2.###
```

ION NUMBER DENSITY AND CONDUCTIVITY AT POINT 9

	ION	DENS (M-3)		ION	DENS (M-3)		ION	DENS (M-3)		ION	DENS (M-3)
1	K+	8.17#E 19	2	NA+	7.176E 16						
1	ALO-	2.#84E 17	2	ALO2-	1.184E 19	3	BO2-	2.597E 17	4	CO2-	3.439E 16
5	CL-	6.429E 16	6	F-	2.821E 15	7	FEO-	1.712E 16	8	FEO2-	6.959E 18
9	N-	4.467E 15	1#	HCO3-	6.335E 15	11	NB-	2.662E 15	12	K-	9.422E 15
13	KO-	1.287E 17	14	NO-	1.656E 15	15	NO2-	1.686E 16	16	NAO-	4.25#E 15
17	O-	1.848E 17	18	OH-	1.891E 18	19	O2-	3.793E 16	2#	PO2-	8.211E 18
21	S-	1.#83E 15	22	SO-	8.886E 15	23	SO2-	1.326E 17			

CONDUCTIVITY = 5.5928 (MHO/M)

```
DIFFUN  -  X=   1.759#E ##    AVN=   8.976#E 25
REACTION  1    RATES  3.#####E-13  2.91185E #1    PRODS  6.#4359E-11  1.68194E-#9    POWERS  #.#####E-#1  2.#####E ##
REACTION  2    RATES  4.19824E-34  3.7#872E-#9    PRODS  5.83815E-12  2.12486E-13    POWERS  #.#####E-#1  3.#####E ##
    1  #.#####E-#1  #.#####E-#1     2  2.184#E-#5  #.#####E-#1     3  2.5341E-#6 -1.5879E-#6     4  1.3283E-#5  1.#844E-#9
    5  9.7669E #4 -4.34#9E #4     6  9.2#96E #3  2.9778E #1
1#    -2#.196  -13.#55  -13.948  -24.688  -17.126  -25.972  -14.168  -27.124  -25.78#  -26.833  -33.729  -29.471  -23.#1#  -24.46#
   -25.349  -34.429  -37.748  -16.676    2.###
```

ION NUMBER DENSITY AND CONDUCTIVITY AT POINT 1#

	ION	DENS (M-3)		ION	DENS (M-3)		ION	DENS (M-3)		ION	DENS (M-3)
1	K+	6.939E 19	2	NA+	5.879E 16						

```
  1  ALO-        1.606E 17     2  ALO2-       1.022E 19     3  BO2-        2.185E 17     4  CO2-        2.639E 16
  5  CL-         5.396E 16     6  F-          2.292E 15     7  FEO-        1.215E 16     8  FEO2-       5.342E 18
  9  H-          3.341E 15    10  HCO3-       5.104E 15    11  HS-         2.053E 15    12  K-          7.547E 15
 13  KO-         1.035E 17    14  NO-         1.203E 15    15  NO2-        1.301E 16    16  NAO-        3.434E 15
 17  O-          1.398E 17    18  OH-         1.513E 18    19  O2-         2.856E 16    20  PO2-        7.508E 18
 21  SO-         6.851E 15    22  SO2-        1.098E 17
CONDUCTIVITY =  5.2517  (MHO/M)


DIFFUN  -  X=   2.0090E 00    AVN=   8.1080E 25
REACTION  1    RATES  3.00000E-13  2.90531E 01    PRODS  4.69967E-11  1.28600E-09    POWERS  0.00000E-01  2.00000E 00
REACTION  2    RATES  4.24337E-34  2.00954E-09    PRODS  5.83190E-12  1.53447E-13    POWERS  0.00000E-01  3.00000E 00
    1  0.0000E-01  0.0000E-01     2  2.1040E-05  0.0000E-01     3  2.1546E-06 -1.4576E-06     4  1.3283E-05  6.4584E-10
    5  8.7189E 04 -4.0471E 04     6  9.2172E 03  3.1157E 01
11    -20.311  -13.115  -13.985  -24.759  -17.195  -26.222  -14.212  -27.245  -25.981  -27.046  -33.938  -29.543  -23.053  -24.489
   -25.394  -34.569  -37.934  -16.837    2.000

                                        ION NUMBER DENSITY AND CONDUCTIVITY AT POINT  11
     ION          DENS (M-3)          ION          DENS (M-3)          ION          DENS (M-3)          ION          DENS (M-3)

  1  K+           5.840E 19     2  NA+          4.760E 16

  1  ALO-         1.267E 17     2  ALO2-        8.726E 18     3  BO2-        1.817E 17     4  CO2-        1.993E 16
  5  CL-          4.475E 16     6  F-          1.836E 15     7  FEO-        8.423E 15     8  FEO2-       4.024E 18
  9  H-           2.452E 15    10  HCO3-       4.062E 15    11  HS-         1.561E 15    12  K-          5.965E 15
 13  KO-          8.217E 16    14  NO2-        9.869E 15    15  NAO-        2.738E 15    16  O-          1.037E 17
 17  OH-          1.192E 18    18  O2-         2.107E 16    19  PO2-        6.838E 18    20  SO-         5.202E 15
 21  SO2-         8.995E 16
CONDUCTIVITY =  4.6970  (MHO/M)


DIFFUN  -  X=   2.2590E 00    AVN=   7.2920E 25
REACTION  1    RATES  3.00000E-13  2.89792E 01    PRODS  3.57816E-11  9.56866E-10    POWERS  0.00000E-01  2.00000E 00
REACTION  2    RATES  4.29162E-34  1.04291E-09    PRODS  5.62550E-12  1.07809E-13    POWERS  0.00000E-01  3.00000E 00
    1  0.0000E-01  0.0000E-01     2  2.1040E-05  0.0000E-01     3  1.8070E-06 -1.3216E-06     4  1.3283E-05  3.7120E-10
    5  7.7447E 04 -3.7451E 04     6  9.2252E 03  3.2516E 01
12    -20.430  -13.178  -14.024  -24.832  -17.270  -26.493  -14.259  -27.374  -26.191  -27.274  -34.160  -29.616  -23.096  -24.518
   -25.441  -34.719  -38.133  -17.010    2.000

                                        ION NUMBER DENSITY AND CONDUCTIVITY AT POINT  12
     ION          DENS (M-3)          ION          DENS (M-3)          ION          DENS (M-3)          ION          DENS (M-3)

  1  K+           4.867E 19     2  NA+          3.809E 16

  1  ALO-         9.829E 16     2  ALO2-        7.368E 18     3  BO2-        1.492E 17     4  CO2-        1.478E 16
  5  CL-          3.664E 16     6  F-          1.449E 15     7  FEO-        5.692E 15     8  FEO2-       2.970E 18
  9  H-           1.765E 15    10  HCO3-       3.192E 15    11  HS-         1.171E 15    12  K-          4.649E 15
 13  KO-          6.430E 16    14  NO2-        7.345E 15    15  NAO-        2.154E 15    16  O-          7.531E 16
 17  OH-          9.248E 17    18  O2-         1.520E 16    19  PO2-        6.203E 18    20  SO-         3.887E 15
 21  SO2-         7.284E 16
CONDUCTIVITY =  4.5328  (MHO/M)


DIFFUN  -  X=   2.5090E 00    AVN=   6.5309E 25
REACTION  1    RATES  3.00000E-13  2.88961E 01    PRODS  2.66590E-11  6.90890E-10    POWERS  0.00000E-01  2.00000E 00
REACTION  2    RATES  4.34312E-34  5.17374E-10    PRODS  5.81906E-12  7.36761E-14    POWERS  0.00000E-01  3.00000E 00
    1  0.0000E-01  0.0000E-01     2  2.1040E-05  0.0000E-01     3  1.4947E-06 -1.1746E-06     4  1.3283E-05  2.0593E-10
    5  6.8465E 04 -3.4374E 04     6  9.2335E 03  3.3818E 01
13    -20.558  -13.244  -14.064  -24.905  -17.351  -26.786  -14.309  -27.511  -26.411  -27.517  -34.395  -29.690  -23.141  -24.546
```

-25.489 -34.878 -38.345 -17.194 2.000

ION NUMBER DENSITY AND CONDUCTIVITY AT POINT 13

	ION	DENS (M-3)		ION	DENS (M-3)		ION	DENS (M-3)		ION	DENS (M-3)
1	K+	4.017E 19	2	NA+	3.011E 16						
1	ALO-	7.498E 16	2	ALO2-	6.145E 18	3	BO2-	1.210E 17	4	CO2-	1.078E 16
5	CL-	2.961E 16	6	F-	1.126E 15	7	FEO-	3.747E 15	8	FEO2-	2.147E 18
9	N-	1.244E 15	10	HCO3-	2.477E 15	11	K-	3.571E 15	12	KO-	4.957E 16
13	MO2-	5.358E 15	14	NAO-	1.670E 15	15	O-	5.349E 16	16	OH-	7.060E 17
17	O2-	1.072E 16	18	PO2-	5.606E 18	19	SO-	2.858E 15	20	SO2-	5.831E 16

CONDUCTIVITY = 4.161E (MHO/M)

NON-EQUILIBRIUM REACTIONS

```
 1      1.0  SIO          + 1.0  OH          = 1.0  SIO2        + 1.0  H
CHEMICAL RATE - 3.0000E-13*T**    0.0000*EXP(-0.0000E-01/T)

 2      2.0  SIO2         + 1.0  THIRD BODY  = 2.0  SIO2(L)     + 1.0  THIRD BODY
CHEMICAL RATE - 1.0000E-30*T**   -1.0000*EXP(-0.0000E-01/T)
```

NON-EQUILIBRIUM REACTING SPECIES

```
SIO2         SIO2(L)
```

FROZEN SPECIES

```
AL2O3(S)     AL2O3(L)
```

THEORETICAL MHD CORE PERFORMANCE

PC = 88.2 PSIA
CASE NO. 2137

	CHEMICAL FORMULA									WT FRACTION (SEE NOTE)	ENERGY CAL/MOL	STATE	TEMP DEG K	DENSITY G/CC
FUEL	C 5.74466	H 4.46442	N 0.07139	S 0.03119	O 0.98628					0.73279	-38252.000	S	298.00	0.0000
FUEL	SI 0.74894	FE 0.10520	AL 0.45115	MG 0.05923	O 2.43164					0.06546	-278802.000	S	298.00	0.0000
FUEL	CA 0.26748	B 0.00575	P 0.00705	O 0.29371						0.01278	-42710.000	S	298.00	0.0000
FUEL	K 0.01486	NA 0.09601	O 0.05583							0.00301	-5490.400	S	298.00	0.0000
FUEL	LI 0.00601	CL 0.00142	F 0.00540							0.00016	-934.000	S	298.00	0.0000
FUEL	H 2.00000	C 1.00000	O 3.00000							0.18500	-27490.000	S	298.00	0.0000
OXIDANT N	2.03000									0.76539	12552.699	G	1900.00	0.0000
OXIDANT O	2.00000									0.23461	1324.100	G	1900.00	0.0000

O/F= 6.7655 PERCENT FUEL= 12.8775 EQUIVALENCE RATIO= 1.0500 REACTANT DENSITY= 0.0000

AXIAL STATION (M)

	CHAMBER	THROAT	0.000	0.250	0.500	0.750	1.000	1.250	1.500	1.750	2.000	2.250	2.500
PC/P	1.2400	1.7393	3.2000	3.4722	3.7821	4.1367	4.5445	5.0156	5.5626	6.1999	6.9446	7.8169	8.8406
P, ATM	6.3000	3.4497	1.8750	1.7280	1.5864	1.4504	1.3203	1.1963	1.0786	0.9670	0.8640	0.7676	0.6787
T, DEG K	2875	2703	2530	2512	2493	2473	2452	2430	2407	2383	2358	2331	2303
RHO, G/CC	7.4760-4	4.6172-4	2.7059-4	2.5179-4	2.3315-4	2.1510-4	1.9767-4	1.8091-4	1.6486-4	1.4957-4	1.3512-4	1.2154-4	1.0887-4
H, CAL/G	261.4	197.6	51.4	41.1	30.3	19.1	7.6	-4.5	-17.0	-29.9	-43.3	-57.0	-71.1
S, CAL/(G)(K)	2.1905	2.1905	2.1905	2.1918	2.1932	2.1946	2.1961	2.1977	2.1993	2.2011	2.2029	2.2048	2.2068
M, MOL WT	29.394	29.609	30.005	30.033	30.062	30.092	30.123	30.155	30.187	30.220	30.253	30.287	30.321
(DLV/DLP)T	-1.01335	-1.01007	-1.01036	-1.00975	-1.00934	-1.00891	-1.00847	-1.00804	-1.00760	-1.00716	-1.00672	-1.00627	-1.00583
(DLV/DLT)P	1.2908	1.2516	1.2516	1.2302	1.2293	1.2281	1.2267	1.2011	1.1912	1.1812	1.1709	1.1606	1.1501
CP, CAL/(G)(K)	0.7895	0.7520	0.7634	0.7424	0.7295	0.7160	0.7020	0.6875	0.6724	0.6568	0.6407	0.6241	0.6070
GAMMA (S)	1.1485	1.1475	1.1436	1.1453	1.1463	1.1473	1.1485	1.1497	1.1512	1.1528	1.1545	1.1565	1.1587
SON VEL,M/SEC	966.4	932.0	895.4	892.4	889.0	885.4	881.6	877.7	873.6	869.3	864.9	860.3	855.5
ELEC DENS	6.460 20	2.910 20	1.132 20	1.013 20	9.002 15	7.942 19	6.950 19	6.027 19	5.175 19	4.397 19	3.695 19	3.068 19	2.517 19
IONIC DENS)	1.799 21	6.941 20	2.533 20	2.250 20	1.984 20	1.730 20	1.512 20	1.305 20	1.110 20	9.493 19	7.994 19	6.673 19	5.524 19
SIGMA (MHO/M)	14.2233	10.7624	7.3220	7.0612	6.7944	6.5163	6.2235	5.9157	5.5920	5.2517	4.8970	4.5320	4.1610
W/O IONS	15.9547	11.8255	7.8974	7.6062	7.3082	6.9985	6.6733	6.3325	5.9761	5.6006	5.2114	4.8132	4.4093
FREQ (1/SEC)	1.280 12	7.620 11	4.357 11	4.041 11	3.733 11	3.435 11	3.147 11	2.871 11	2.608 11	2.360 11	2.126 11	1.908 11	1.704 11
MACH NUMBER	0.000	1.000	1.480	1.485	1.491	1.497	1.504	1.510	1.517	1.525	1.533	1.541	1.549
AE/AT		1.0000	1.1980	1.2092	1.3923	1.5092	1.6422	1.7944	1.9691	2.1704	2.4026	2.6711	2.9819
CSTAR, FT/SEC		4635	4635	4635	4635	4635	4635	4635	4635	4635	4635	4635	4635
CF		0.660	0.938	0.938	0.938	0.938	0.938	0.938	0.938	0.938	0.938	0.938	0.938
IVAC LB-SEC/LB		177.9	189.1	188.7	188.2	187.7	187.2	186.7	186.2	185.6	185.0	184.4	183.8
ISP, LB-SEC/LB		95.0	135.2	135.2	135.2	135.2	135.2	135.2	135.2	135.2	135.2	135.2	135.2

MOLE FRACTIONS

AL	1.049 -7	1.982 -8	2.885 -9	2.549 -9	2.232 -9	1.935 -9	1.660 -9	1.408 -9	1.178 -9	9.713-10	7.889-10	6.303-10	4.949-10
ALF	1.994 -8	7.000 -9	2.055 -9	1.951 -9	1.845 -9	1.737 -9	1.627 -9	1.516 -9	1.403 -9	1.290 -9	1.177 -9	1.065 -9	9.559-10
ALH	1.134 -9	1.759-10	2.070-11	1.774-11	1.505-11	1.263-11	1.047-11	8.568-12	6.906-12	5.479-12	4.275-12	3.277-12	2.467-12
ALO	2.0642-6	4.9273-7	9.2578-8	8.3982-8	7.5645-8	6.7596-8	5.9873-8	5.2514-8	4.5553-8	3.9043-8	3.3031-8	2.7554-8	2.2640-8
ALO-	1.4776-6	4.4843-7	1.0634-7	9.8498-8	9.0759-8	8.3078-8	7.5488-8	6.8030-8	6.0741-8	5.3686-8	4.6929-8	4.0500-8	3.4551-8
ALOCL	1.914 -9	6.788-10	1.975-10	1.873-10	1.768-10	1.662-10	1.553-10	1.443-10	1.332-10	1.220-10	1.108-10	9.975-11	8.893-11
ALOF	3.7821-7	2.0351-7	9.6035-8	9.5976-8	9.5849-8	9.5607-8	9.5247-8	9.4744-8	9.4069-8	9.3193-8	9.2082-8	9.0714-8	8.9022-8
ALOH	2.1367-6	7.2403-7	2.0523-7	1.9383-7	1.8231-7	1.7070-7	1.5901-7	1.4729-7	1.3559-7	1.2396-7	1.1251-7	1.0132-7	9.0486-8
ALO2	1.2384-5	4.0215-6	1.0544-6	9.9859-7	9.2601-7	8.6075-7	7.9499-7	7.2988-7	6.6303-7	5.9760-7	5.3327-7	4.7063-7	4.0832-7
ALO2-	2.4770-5	1.1512-5	4.3018-6	4.2716-6	4.1557-6	4.0301-6	3.8941-6	3.7469-6	3.5879-6	3.4167-6	3.2333-6	3.0381-6	2.8317-6
ALO2H	8.3253-5	3.9077-5	1.5833-5	1.5533-5	1.5210-5	1.4863-5	1.4491-5	1.4089-5	1.3657-5	1.3192-5	1.2693-5	1.2160-5	1.1592-5
ALO2H2	4.3868-4	2.5543-4	1.3455-4	1.3517-4	1.3583-4	1.3652-4	1.3726-4	1.3805-4	1.3888-4	1.3975-4	1.4068-4	1.4165-4	1.4267-4

AL2O	1.0093 -9	1.266-10	1.0042-11	9.3310-12	8.292-12	7.3006-12	6.376-12	5.5005-12	4.697-12	3.955-12	3.286-12	2.689-12	2.156-12
BO	9.364 -9	3.302 -9	1.040 -9	9.204-10	8.076-10	7.0200-10	6.0300-10	5.134-10	4.310-10	3.560-10	2.911-10	2.337-10	1.845-10
BO2	1.1322-7	5.6403-8	2.4710-8	2.2715-8	2.0745-8	1.8816-8	1.6934-8	1.5111-8	1.3355-8	1.1600-8	1.0099-8	8.6259-9	7.2709-9
BO2-	2.2905-7	1.6732-7	1.0945-7	1.0469-7	9.9034-8	9.4002-8	8.9597-8	8.4229-8	7.8705-8	7.3056-8	6.7319-8	6.1535-8	5.5756-8
CH2O	1.0091 -9	4.100-10	1.403-10	1.225-10	1.062-10	9.125-11	7.775-11	6.562-11	5.483-11	4.534-11	3.709-11	3.003-11	2.405-11
CO	6.8405-2	5.5550-2	4.2772-2	4.1509-2	4.0199-2	3.8804-2	3.7432-2	3.5976-2	3.4471-2	3.2923-2	3.1339-2	2.9726-2	2.8097-2
COB	2.5256-8	1.2914-8	6.1367-9	5.5911-9	5.0695-9	4.5732-9	4.1033-9	3.6609-9	3.2468-9	2.8627-9	2.5097-9	2.1885-9	1.8995-9
CO2	1.1358-1	1.2030-1	1.4235-1	1.4364-1	1.4498-1	1.4638-1	1.4784-1	1.4936-1	1.5094-1	1.5257-1	1.5425-1	1.5597-1	1.5772-1
CO2-	1.1914-7	5.7270-8	2.2954-8	2.0533-8	1.8248-8	1.6089-8	1.4061-8	1.2171-8	1.0424-8	8.8258-9	7.3828-9	6.0962-9	4.9659-9
CO3-	1.6002 -9	7.124-10	2.575-10	2.271-10	1.989-10	1.726-10	1.483-10	1.260-10	1.058-10	8.772-11	7.170-11	5.773-11	4.575-11
CA	1.1993-5	7.5660-6	2.0950-6	1.0385-6	1.5984-6	1.3753-6	1.1698-6	9.8234-7	8.1329-7	6.6307-7	5.3178-7	4.1902-7	3.2407-7
CACL	8.032 -9	5.173 -9	1.444 -9	1.262 -9	1.092 -9	9.356-10	7.921-10	6.621-10	5.435-10	4.426-10	3.531-10	2.768-10	2.130-10
CAF	1.3800-7	1.1127-7	4.0429-8	3.6322-8	3.2390-8	2.8634-8	2.5077-8	2.1734-8	1.8619-8	1.5750-8	1.3145-8	1.0814-8	8.7585-9
CAF2	9.852-10	1.169 -9	6.565-10	6.151-10	5.730-10	5.323-10	4.909-10	4.499-10	4.090-10	3.691-10	3.301-10	2.926-10	2.567-10
CAO(S)	0.0000 0	8.2644-5	5.1952-4	5.4859-4	5.7679-4	6.0404-4	6.3024-4	6.5527-4	6.7905-4	7.0142-4	7.2226-4	7.4146-4	7.5894-4
CAO	1.2165-5	7.1443-6	1.0093-6	1.5680-6	1.3468-6	1.1433-6	9.5855-7	7.9272-7	6.4558-7	5.1700-7	4.0682-7	3.1395-7	2.3736-7
CAOH	4.8702-4	4.0043-4	1.5612-4	1.4089-4	1.2625-4	1.1224-4	9.8909-5	8.6325-5	7.4537-5	6.3617-5	5.3629-5	4.4614-5	3.6599-5
CAOH+	6.951 -9	2.500 -9	3.761-10	3.070-10	2.472-10	1.961-10	1.531-10	1.174-10	8.821-11	6.492-11	4.671-11	3.201-11	2.247-11
CAO2H2	3.1249-4	3.2590-4	1.5986-4	1.4716-4	1.3475-4	1.2265-4	1.1091-4	9.9573-5	8.8688-5	7.8324-5	6.8547-5	5.9415-5	5.0981-5
CL	1.5914-7	9.3156-8	4.0529-8	4.5434-8	4.2319-8	3.9191-8	3.6063-8	3.2946-8	2.9857-8	2.6818-8	2.3858-8	2.1003-8	1.8281-8
CL-	5.6933-8	4.1955-8	2.7372-8	2.6149-8	2.4302-8	2.3610-8	2.2275-8	2.0899-8	1.9486-8	1.8042-8	1.6580-8	1.5106-8	1.3643-8
E	4.2154-5	3.1051-5	2.0768-5	2.0000-5	1.9224-5	1.8400-5	1.7536-5	1.6632-5	1.5686-5	1.4704-5	1.3691-5	1.2652-5	1.1597-5
F	2.9645-8	1.5599-8	7.2384-9	6.6741-9	6.1185-9	5.5711-9	5.0353-9	4.5139-9	4.0092-9	3.5252-9	3.0658-9	2.6351-9	2.2356-9
F-	4.149 -9	2.590 -9	1.407 -9	1.314 -9	1.222 -9	1.129 -9	1.037 -9	9.454-10	8.549-10	7.663-10	6.803-10	5.976-10	5.189-10
FE	1.3624-4	1.2704-4	1.1859-4	1.0766-4	9.596-5	8.4792-5	7.4205-5	6.4253-5	5.4975-5	4.6438-5	3.8692-5	3.1767-5	2.5681-5
FEO	1.3938-4	1.4047-4	1.3867-4	1.2644-4	1.1322-4	1.0052-4	8.8398-5	7.6926-5	6.6154-5	5.6166-5	4.7028-5	3.8791-5	3.1491-5
FEO-	3.5601-8	2.5219-8	1.6006-8	1.3811-8	1.1671-8	9.7412-9	8.0207-9	6.5054-9	5.1802-9	4.0634-9	3.1289-9	2.3472-9	1.7266-9
FEO2	2.3926-5	2.6603-5	2.8889-5	2.6561-5	2.3992-5	2.1497-5	1.9089-5	1.6782-5	1.4587-5	1.2523-5	1.0606-5	8.8514-6	7.2701-6
FEO2-	3.8500-6	4.2722-6	4.4580-6	4.0600-6	3.6322-6	3.2212-6	2.8290-6	2.4570-6	2.1093-6	1.7863-6	1.4909-6	1.2240-6	9.8917-7
FEO2H2	2.0647-5	2.0846-5	3.9603-5	3.7077-5	3.4101-5	3.1342-5	2.8569-5	2.5874-5	2.3266-5	2.0763-5	1.8381-5	1.6135-5	1.4039-5
FE3O4(L)	0.0000 0	0.0000 0	0.0000 0	9.5566-6	1.9917-5	2.9803-5	3.9405-5	4.8438-5	5.6942-5	6.4853-5	7.2122-5	7.8710-5	8.4589-5
H	2.9443-3	1.8906-3	1.1360-3	1.0793-3	1.0215-3	9.6266-4	9.0297-4	8.4257-4	7.8164-4	7.2054-4	6.5973-4	5.9967-4	5.4008-4
H-	2.696 -8	1.043 -8	3.346 -9	2.948 -9	2.576 -9	2.230 -9	1.911 -9	1.618 -9	1.354 -9	1.117 -9	9.087-10	7.277-10	5.733-10
HBO2	5.0060-7	3.6625-7	2.5248-7	2.4274-7	2.3271-7	2.2239-7	2.1177-7	2.0087-7	1.8970-7	1.7838-7	1.6674-7	1.5509-7	1.4342-7
HCL	3.7023-7	2.6865-7	1.8112-7	1.7352-7	1.6572-7	1.5771-7	1.4950-7	1.4110-7	1.3253-7	1.2382-7	1.1504-7	1.0624-7	9.7486-8
HCN	3.501 -9	1.116 -9	3.083-10	2.638-10	2.238-10	1.881-10	1.565-10	1.288-10	1.048-10	8.425-11	6.690-11	5.247-11	4.066-11
HCO	1.0630-7	3.9103-8	1.2343-8	1.0765-8	9.3130-9	7.9051-9	6.7804-9	5.6973-9	4.7327-9	3.8844-9	3.1485-9	2.5192-9	1.7894-9
HCO3-	9.4785-9	6.0842-9	3.3998-9	3.1321-9	2.8734-9	2.6220-9	2.3789-9	2.1446-9	1.9202-9	1.7066-9	1.5050-9	1.3163-9	1.1414-9
HF	9.5166-6	8.9978-6	8.2627-6	8.1795-6	8.0903-6	7.9915-6	7.8836-6	7.7658-6	7.6368-6	7.4958-6	7.3419-6	7.1756-6	6.9937-6
HK	7.5040-6	4.6685-6	2.6975-6	2.5286-6	2.3615-6	2.1964-6	2.0339-6	1.8745-6	1.7186-6	1.5673-6	1.4213-6	1.2816-6	1.1489-6
HNCO	6.400 -9	2.580 -9	9.215-10	8.096-10	7.062-10	6.113-10	5.248-10	4.466-10	3.764-10	3.141-10	2.595-10	2.122-10	1.710-10
HNO	9.2020-7	4.3290-7	1.7927-7	1.6190-7	1.4527-7	1.2942-7	1.1441-7	1.0027-7	0.7048-8	7.4804-8	6.3589-8	5.3433-8	4.4354-8
HNO2	9.6863-8	4.7796-8	2.0605-8	1.8649-8	1.6773-8	1.4979-8	1.3275-8	1.1664-8	1.0152-8	8.7454-9	7.4513-9	6.2735-9	5.2148-9
HO2	3.6806-6	1.8974-6	8.4774-7	7.7527-7	7.0455-7	6.3577-7	5.6920-7	5.0517-7	4.4395-7	3.8598-7	3.3166-7	2.8137-7	2.3541-7
H2	4.6970-3	3.8010-3	2.9847-3	2.9063-3	2.8250-3	2.7407-3	2.6533-3	2.5629-3	2.4695-3	2.3733-3	2.2749-3	2.1748-3	2.0736-3
H2O	5.4209-2	5.7799-2	6.1169-2	6.1451-2	6.1741-2	6.2039-2	6.2344-2	6.2656-2	6.2974-2	6.3297-2	6.3624-2	6.3951-2	6.4277-2
H2O2	2.7962-7	1.4743-7	6.8629-8	6.2686-8	5.6925-8	5.1360-8	4.6011-8	4.0898-8	3.6037-8	3.1458-8	2.7185-8	2.3240-8	1.9639-8
H2S	4.1189-8	2.1563-8	1.0735-8	9.8418-9	8.9837-9	8.1632-9	7.3822-9	6.6427-9	5.9465-9	5.2964-9	4.6951-9	4.1443-9	3.6451-9
HS-	1.054 -8	4.625 -9	1.787 -9	1.594 -9	1.413 -9	1.243 -9	1.085 -9	9.401-10	8.070-10	6.863-10	5.784-10	4.828-10	3.994-10
K	5.6479-3	5.5905-3	5.4943-3	5.5020-3	5.5088-3	5.5143-3	5.5184-3	5.5206-3	5.5205-3	5.5170-3	5.5121-3	5.5020-3	5.4896-3
K+	7.9651-5	5.2405-5	3.3580-5	3.2201-5	3.0770-5	2.9309-5	2.7819-5	2.6303-5	2.4763-5	2.3205-5	2.1637-5	2.0069-5	1.8512-5
K-	1.8812-8	1.0468-8	5.1254-9	4.7192-9	4.3249-9	3.9399-9	3.5656-9	3.2037-9	2.8557-9	2.5230-9	2.2102-9	1.9169-9	1.6456-9
KBO2	1.6525-5	1.6951-5	1.7314-5	1.7344-5	1.7376-5	1.7408-5	1.7441-5	1.7476-5	1.7511-5	1.7547-5	1.7583-5	1.7620-5	1.7657-5
KCN	2.968 -9	1.156 -9	4.030-10	3.536-10	3.076-10	2.656-10	2.275-10	1.933-10	1.627-10	1.358-10	1.123-10	9.204-11	7.481-11
KCL	3.6410-6	3.8662-6	4.0559-6	4.0712-6	4.0870-6	4.1031-6	4.1196-6	4.1364-6	4.1536-6	4.1711-6	4.1887-6	4.2063-6	4.2238-6
KF	6.1126-6	7.0300-6	8.0006-6	8.1002-6	8.2007-6	8.4042-6	8.5289-6	8.6638-6	8.8102-6	8.9689-6	9.1405-6	9.3273-6	9.5267-6
KO	2.1657-4	1.5161-4	9.8455-5	9.3845-5	8.9157-5	8.4390-5	7.9551-5	7.4647-5	6.9688-5	6.4693-5	5.9695-5	5.4710-5	4.9795-5
KO-	2.2206-7	1.3102-7	6.0263-8	5.3693-8	5.0251-8	5.3102-8	4.0264-8	4.3556-8	3.8997-8	3.4618-8	3.0446-8	2.6514-8	2.2842-8
KOH	4.2399-3	4.4911-3	4.7536-3	4.7608-3	4.7678-3	4.7773-3	4.7886-3	4.8023-3	4.8185-3	4.8378-3	4.8603-3	4.8865-3	4.9168-3
KOH+	1.909 -9	5.961-10	1.617-10	1.395-10	1.192-10	1.009-10	8.452-11	6.995-11	5.716-11	4.607-11	3.668-11	2.863-11	2.205-11
K2	2.1549-7	1.4050-7	8.7267-8	8.2200-8	7.7188-8	7.2243-8	6.7377-8	6.2602-8	5.7932-8	5.3390-8	4.9000-8	4.4723-8	4.0762-8
K2O2H2	3.7891-9	3.9903-9	4.2810-9	4.2185-9	4.1600-9	4.1003-9	4.0505-9	4.0177-9	3.9855-9	3.9635-9	3.9534-9	3.9576-9	3.5784-9
LI	2.1538-6	1.7233-6	1.3230-6	1.2941-6	1.2627-6	1.2293-6	1.1939-6	1.1563-6	1.1163-6	1.0741-6	1.0297-6	9.8321-7	9.3476-7
LIBO2	3.1636-8	2.9540-8	2.7031-8	2.6845-8	2.6644-8	2.6418-8	2.6169-8	2.5893-8	2.5589-8	2.5253-8	2.4882-8	2.4476-8	2.4033-8

NABO2	3.0051-7	3.0926-7	3.1771-7	3.1796-7	3.1824-7	3.1855-7	3.1891-7	3.1931-7	3.1976-7	3.2028-7	3.2086-7	3.2152-7	3.2227-7
LICL	5.7795-9	5.7279-9	5.5382-9	5.5287-9	5.5172-9	5.5016-9	5.4821-9	5.4583-9	5.4293-9	5.3945-9	5.3534-9	5.3053-9	5.2496-9
LIF	3.4352-8	4.0235-8	4.7345-8	4.8224-8	4.9174-8	5.0173-8	5.1242-8	5.2388-8	5.3616-8	5.4933-8	5.6339-8	5.7848-8	5.9442-8
LIH	1.1247-8	6.4090-9	3.4727-9	3.2394-9	3.0092-9	2.7818-9	2.5583-9	2.3397-9	2.1266-9	1.9205-9	1.7226-9	1.5343-9	1.3569-9
LIO	3.7329-7	2.4034-7	1.5178-7	1.4423-7	1.3635-7	1.2872-7	1.2077-7	1.1271-7	1.0456-7	9.6378-8	8.8285-8	8.0100-8	7.2130-8
LIOH	1.7984-5	1.8742-5	1.9426-5	1.9479-5	1.9537-5	1.9595-5	1.9656-5	1.9720-5	1.9787-5	1.9857-5	1.9929-5	2.0004-5	2.0080-5
MG	5.9030-5	5.5018-5	1.2563-5	1.1123-5	9.7709-6	8.5107-6	7.3449-6	6.2759-6	5.3048-6	4.4338-6	3.6636-6	2.9926-6	2.4171-6
MGF	1.550 -8	1.521 -8	3.496 -9	3.081 -9	2.695 -9	2.337 -9	2.008 -9	1.708 -9	1.438 -9	1.197 -9	9.847-10	8.013-10	6.447-10
MGH	2.3112-7	1.4178-7	1.9548-8	1.6284-8	1.3414-8	1.0919-8	8.7731-9	6.9512-9	5.4249-9	4.1670-9	3.1515-9	2.3450-9	1.7170-9
MGN	2.911 -8	1.452 -8	1.576 -9	1.277 -9	1.022 -9	8.064-10	6.268-10	4.794-10	3.602-10	2.657-10	1.924-10	1.366-10	9.322-11
MGO	1.6427-4	1.5497-4	3.3922-5	2.9876-5	2.6096-5	2.2592-5	1.9368-5	1.6429-5	1.3776-5	1.1412-5	9.3365-6	7.5413-6	6.0142-6
MGOH	6.6320-5	7.6825-5	2.1583-5	1.9437-5	1.7395-5	1.5462-5	1.3645-5	1.1947-5	1.0375-5	8.9324-6	7.6258-6	6.4565-6	5.4240-6
MGO2H2	1.5798-5	2.0699-5	6.6938-6	6.0745-6	5.4832-6	4.9218-6	4.3916-6	3.8939-6	3.4298-6	3.0012-6	2.6094-6	2.2552-6	1.9388-6
MGSIO3(L)	0.0000 0	0.0000 0	2.3670-4	2.4520-4	2.5322-4	2.6074-4	2.6776-4	2.7424-4	2.8020-4	2.8560-4	2.9046-4	2.9476-4	2.9853-4
N	2.0318-6	7.4863-7	2.3550-7	2.0794-7	1.8209-7	1.5799-7	1.3570-7	1.1525-7	9.6677-8	8.0017-8	6.5287-8	5.2460-8	4.1476-8
NCO	1.977 -9	5.768-10	1.392-10	1.178-10	9.864-11	8.172-11	6.690-11	5.406-11	4.308-11	3.381-11	2.613-11	1.987-11	1.486-11
NH	8.8823-8	2.9454-8	8.3130-9	7.2069-9	6.1925-9	5.2690-9	4.4353-9	3.6899-9	3.0304-9	2.4548-9	1.9599-9	1.5410-9	1.1925-9
NH2	6.8796-8	2.7715-8	9.8989-9	8.7602-9	7.6975-9	6.7115-9	5.8020-9	4.9717-9	4.2170-9	3.5412-9	2.9415-9	2.4164-9	1.9620-9
NH3	1.220 -8	5.903 -9	2.642 -9	2.385 -9	2.141 -9	1.911 -9	1.696 -9	1.495 -9	1.308 -9	1.138 -9	9.821-10	8.421-10	7.174-10
NO	1.1922-2	8.4165-3	5.4424-3	5.1999-3	4.9510-3	4.6955-3	4.4335-3	4.1654-3	3.8916-3	3.6133-3	3.3321-3	3.0497-3	2.7682-3
NO-	1.470 -8	5.110 -9	1.422 -9	1.229 -9	1.053 -9	8.917-10	7.464-10	6.166-10	5.020-10	4.022-10	3.168-10	2.450-10	1.858-10
NO2	4.9973-6	2.7467-6	1.3191-6	1.2157-6	1.1139-6	1.0140-6	9.1640-7	8.2163-7	7.2991-7	6.4197-7	5.5846-7	4.7997-7	4.0710-7
NO2-	5.2545-8	2.6132-8	1.0781-8	9.7160-9	8.6994-9	7.7269-9	6.8021-9	5.9288-9	5.1104-9	4.3317-9	3.6068-9	3.0285-9	2.4189-9
N2	6.9452-1	7.0316-1	7.1107-1	7.1175-1	7.1245-1	7.1310-1	7.1393-1	7.1471-1	7.1551-1	7.1634-1	7.1719-1	7.1605-1	7.1892-1
N2O	1.3943-6	7.4265-7	3.5497-7	3.2568-7	2.9721-7	2.6961-7	2.4297-7	2.1739-7	1.9296-7	1.6980-7	1.4805-7	1.2701-7	1.0917-7
NA	2.1891-4	2.2195-4	2.2370-4	2.2433-4	2.2490-4	2.2559-4	2.2622-4	2.2684-4	2.2744-4	2.2802-4	2.2857-4	2.2908-4	2.2954-4
NA+	1.2351-7	6.7714-8	2.5168-8	2.2864-8	2.0595-8	1.8331-8	1.6096-8	1.3980-8	1.1749-8	1.9657-8	1.7639-8	1.5706-8	1.3874-8
NACL	5.3099-8	5.5439-8	5.7158-8	5.7168-8	5.7176-8	5.7181-8	5.7184-8	5.7184-8	5.7181-8	5.7174-8	5.7163-8	5.7148-8	5.7128-8
NAF	8.1087-8	9.0746-8	1.0195-7	1.0275-7	1.0362-7	1.0455-7	1.0556-7	1.0667-7	1.0788-7	1.0920-7	1.1063-7	1.1222-7	1.1391-7
NAH	3.8266-7	2.5238-7	1.5614-7	1.4937-7	1.4063-7	1.3195-7	1.2335-7	1.1485-7	1.0648-7	9.8283-8	9.0318-8	8.2603-8	7.5212-8
NAO	7.7661-6	5.6522-6	3.8448-6	3.6781-6	3.5261-6	3.3349-6	3.1585-6	2.9791-6	2.7971-6	2.6131-6	2.4280-6	2.2426-6	2.0582-6
NAO-	6.791 -9	4.142 -9	2.217 -9	2.054 -9	1.894 -9	1.737 -9	1.583 -9	1.434 -9	1.288 -9	1.148 -9	1.015 -9	8.880-10	7.695-10
NAOH	7.0375-5	7.6929-5	7.5430-5	7.5212-5	7.5005-5	7.4811-5	7.4635-5	7.4481-5	7.4355-5	7.4261-5	7.4206-5	7.4195-5	7.4235-5
O	4.0424-3	2.3906-3	1.2564-3	1.1004-3	1.0133-3	1.0254-3	9.4674-4	8.6778-4	7.8081-4	7.1007-4	6.3346-4	5.5850-4	4.8640-4
O-	8.6832-7	3.6961-7	1.2839-7	1.1450-7	1.0134-7	8.8860-8	7.7109-8	6.6142-8	5.6801-8	4.6747-8	3.8423-8	3.1054-8	2.4646-8
OH	1.0210-2	7.3973-3	4.9634-3	4.7644-3	4.5586-3	4.3457-3	4.1258-3	3.8989-3	3.6654-3	3.4261-3	3.1823-3	2.9355-3	2.6874-3
OH-	3.6023-6	2.0678-6	1.0235-6	9.4429-7	8.6687-7	7.9072-7	7.1617-7	6.4357-7	5.7326-7	5.0577-7	4.4163-7	3.8132-7	3.2529-7
O2	1.9009-2	1.4952-2	1.0707-2	1.0391-2	1.0052-2	9.6894-3	9.3003-3	8.8836-3	8.4377-3	7.9627-3	7.4593-3	6.9293-3	6.3756-3
O2-	1.7835-7	7.7209-8	2.6856-8	2.3895-8	2.1093-8	1.8442-8	1.5952-8	1.3634-8	1.1496-8	9.5509-9	7.8072-9	6.2693-9	4.9374-9
O3	4.744 -9	1.783 -9	4.884-10	4.265-10	3.685-10	3.151-10	2.661-10	2.217-10	1.819-10	1.467-10	1.161-10	9.006-11	6.930-11
PN	4.6565-8	2.7814-8	1.5969-8	1.4970-8	1.3985-8	1.3017-8	1.2070-8	1.1146-8	1.0248-8	9.3826-9	8.5540-9	7.7673-9	7.0277-9
PO	1.8872-6	1.3603-6	9.4116-7	9.0474-7	8.6748-7	8.2951-7	7.9086-7	7.5158-7	7.1175-7	6.7157-7	6.3127-7	5.9109-7	5.5134-7
PO2	1.7899-5	1.0393-5	1.0788-5	1.0828-5	1.0867-5	1.0907-5	1.0947-5	1.0987-5	1.0027-5	1.0068-5	1.0108-5	1.0147-5	1.0185-5
PO2-	1.0803-6	2.1453-6	2.3796-6	2.3944-6	2.4115-6	2.4294-6	2.4481-6	2.4679-6	2.4886-6	2.5106-6	2.5336-6	2.5577-6	2.5829-6
S	2.1770-6	1.0767-6	4.0921-7	4.4927-7	4.1042-7	3.7277-7	3.3646-7	3.0164-7	2.6843-7	2.3703-7	2.0766-7	1.8044-7	1.5553-7
S-	5.036 -9	2.090 -9	7.482-10	6.653-10	5.870-10	5.151-10	4.475-10	3.852-10	3.281-10	2.765-10	2.304-10	1.897-10	1.544-10
SH	4.7507-7	2.3322-7	1.0616-7	9.6926-8	8.8038-8	7.9525-8	7.1411-8	6.3722-8	5.6478-8	4.9713-8	4.3458-8	3.7733-8	3.2552-8
SN	3.081 -8	1.224 -8	4.374 -9	3.883 -9	3.424 -9	2.990 -9	2.603 -9	2.241 -9	1.912 -9	1.615 -9	1.352 -9	1.120 -9	9.185-10
SO	9.4168-5	6.5714-5	4.3547-5	4.1630-5	3.9603-5	3.7710-5	3.5713-5	3.3697-5	3.1667-5	2.9633-5	2.7608-5	2.5607-5	2.3643-5
SO-	3.3019-8	1.4996-8	5.8490-9	5.2389-9	4.6632-9	4.1194-9	3.6089-9	3.1332-9	2.6933-9	2.2910-9	1.9273-9	1.6020-9	1.3170-9
SO2	8.6346-4	9.0283-4	9.3463-4	9.3737-4	9.4017-4	9.4303-4	9.4593-4	9.4889-4	9.5189-4	9.5492-4	9.5796-4	9.6099-4	9.6400-4
SO2-	1.4608-7	1.0037-7	6.1822-8	5.8162-8	5.4541-8	5.0924-8	4.7320-8	4.3743-8	4.0204-8	3.6725-8	3.3328-8	3.0035-8	2.6870-8
SO3	3.0639-7	2.7412-7	2.3383-7	2.2898-7	2.2374-7	2.1833-7	2.1266-7	2.0670-7	2.0044-7	1.9386-7	1.8695-7	1.7971-7	1.7214-7
SI	1.388 -9	4.644-10	7.573-11	5.967-11	4.623-11	3.513-11	2.615-11	1.901-11	1.345-11	9.255-12	6.171-12	3.970-12	2.472-12
SIC(S)	0.0000 0	0.0000 0	3.9563-4	5.1344-4	6.2999-4	7.4358-4	8.5357-4	9.5917-4	1.0596-3	1.1538-3	1.2408-3	1.3197-3	1.3899-3
SIO	2.0654-3	2.0587-3	1.1504-3	1.0391-3	9.3054-4	8.2517-4	7.2367-4	6.2673-4	5.3502-4	4.4948-4	3.7094-4	3.0008-4	2.3746-4
SIS	1.403 -9	7.269-10	2.036-10	1.690-10	1.386-10	1.120-10	8.916-11	6.877-11	5.356-11	4.029-11	2.965-11	2.131-11	1.494-11

MOLE FRACTIONS OF MEOL SPECIES

AL2O3(L)	4.1227-4	5.4575-4	6.2993-4	6.3042-4	6.3093-4	6.3146-4	6.3201-4	6.3257-4	6.3316-4	6.3377-4	6.3439-4	6.3503-4	6.3567-4
SIO2	2.4182-4	2.7114-4	1.7090-4	1.5771-4	1.4329-4	1.2911-4	1.1526-4	1.0184-4	8.8951-5	7.6735-5	6.5337-5	5.4877-5	4.5462-5
SIO2(L)	0.0000 0	0.0000 0	3.9733-4	3.9775-4	3.9816-4	3.9855-4	3.9894-4	3.9932-4	3.9971-4	4.0010-4	4.0050-4	4.0091-4	4.0132-4

ADDITIONAL PRODUCTS WHICH WERE CONSIDERED BUT WHOSE MOLE FRACTIONS WERE LESS THAN 0.10000E-08 FOR ALL ASSIGNED CONDITIONS

AL(S)	AL(L)	AL+	ALBO2	ALCL	ALCL+	ALCLF	ALCLF2	ALCL2	ALCL2+
ALCL2-	ALCL2F	ALCL3(S)	ALCL3(L)	ALCL3	ALF+	ALF2	ALF2+	ALF2-	ALF3(S)
ALF3(S)	ALF3	ALN(S)	ALN	ALO+	ALOH+	ALOH-	AL2CL6	AL2F6	AL2O+
AL2O2	AL2O2+	AL6O13SI2	ALS	B(S)	B(L)	B	B+	BCL	BCL+
BCLF	BCLO	BCL2	BH	BCL2+	BCL2-	BCL2H	BF	BF2	BF2+
BF2-	BF3	BOF2	BS	BH2	BH2O2	BH3	BH2O2	BH	BO-
BOCL	BOF	C(S)	C+	B2	B2O	B2O2	B2O3(L)	B2O3	B3O3CL3
B3O3F3	C	CCL4	CF	C-	CAL	CB	C3-	C2H-	CCL
CCL2	CCL3	CH+	CF+	CF+	CF2	CF2+	CF3	CF3+	CF4
CH	CH2	COCL2	COF	CH4	CHCL	CN	CN+	CN-	CKN
CN2	COCL	C2-	C2CL2	COF2	COS-	CO4-	CP	CS	CS-
CS2	C2	C2H2	C2O	C2F2	C2F4	C2H	C2HF	C5	C2H4
C2H6	C2H	CACO3(S)	CACO3(S)	C3	C3O2	C4	C5	CA(S)	CA(S)
CA(L)	CA+	CAS(S)	CASO4(S)	CACL2(S)	CACL2(L)	CACL2	CAF2(S)	CAF2(S)	CAF2(L)
CAO(L)	CAO2H2(S)	CLO2-	CLF	CL+	CLCN	CLF	CLF3	CLWO	CLO
CLO-	CLO2	FE(S)	FE(S)	CL2	CL2O	FCN	FO	FO2	F2
F2O	FE(S)	FEO(S)	FEO(L)	FE(L)	FECL	FECL2(S)	FECL2(L)	FECL2	FECL3(S)
FECL3(L)	FECL3	FE2O3(S)	FE2O3(L)	FEO2H2(S)	FEO3H3(S)	FES(S)	FES(S)	FES(S)	FESO4(S)
FES2(S)	FE2CL4	HCO+	HCP	FE2SIO12(S)	FE3O4(S)	H+	HALO	HBO	HBO+
HBS	HBS+	H3BO6	H3O+	HNO3	HOF	HSO3F	H2O(S)	H2O(L)	H2P
H2SO4(L)	H2SO4	KF(S)	KHF2(S)	HP-	HSI-	K(S)	K(L)	KCL(S)	KCL(L)
KF(L)	KF(L)	KOH(L)	K2SO4(S)	KHF2(S)	KHF2(L)	K2CO3(S)	K2CO3(L)	K2F2	KOH(S)
KOH(S)	KOH(L)	LICL(S)	LIF(S)	K2SO4(S)	K2SO4(L)	LI(S)	LI(L)	LI+	LI-
NA-	LICL(L)	LIOH(S)	LIOH(L)	LIF(L)	LIF2-	LIFO	LIH(S)	LIH(L)	LIN
LINAO	LIO-	LI2O2	LI2O2H2	LIOH+	LIOH	LI2	LI2CL2	LI2F2	LI2O(S)
LI2O(L)	LI2O	MGCLF	MGCL2(S)	LI3CL3	LI3F3	MG(S)	MG(L)	MG+	MGCO3(S)
MGCL	MGCL+	MGB(S)	MGS	MGCL2(L)	MGCL2	MGF2(S)	MGF2(L)	MGF2	MGO(S)
MGO(L)	MGOH+	MF	MF2	MGSO4(S)	MGSO4(L)	MGSIO3(S)	MGSIO3(S)	MGSIO3(S)	MG2F4
MG2SIO4(S)	MG2SIO4(L)	MO3-	N2H4	MF3	MOCL	MO+	MOF	MOF3	MO2CL
MO2F	MO3	NACL(L)	NAF(L)	N2O+	N2O4	N2O5	NH	NA(S)	NA(L)
NACL(S)	NACL(L)	NA2CL2	NA2F2	NAF2-	NAOH(S)	NAOH(L)	NAOH+	NA2	NA2CO3(S)
NA2CO3(S)	NA2CO3(L)	NA2SO4	O+	NA2O(S)	NA2O(S)	NA2O(L)	NA2O2H2	NA2SO4(S)	NA2SO4(S)
NA2SO4(S)	NA2SO4(L)	PH	PH3	OH+	P	P(S)	P+	P-	PCL3
PF3	PF5	SF4	SOF2	PO-	PS	P2	P4	S(S)	S(L)
S+	SF6	SI(L)	SIF2	SO2CL2	SO2CLF	SO2F2	SO3-	S2	S2-
S8	SI(S)	SIF	SIF3	SI-	SIC	SIC2	SICL	SICL2	SICL3
SICL4	SIF	SIO2(S)	SI2C	SIF4	SIH	SIH+	SIH4	SIN	SIO2(S)
SIO2(S)	SIO2(S)	SI2	SI2N	SI3	AL2O3(S)				

NOTE. WEIGHT FRACTION OF FUEL IN TOTAL FUELS AND OF OXIDANT IN TOTAL OXIDANTS

```
DIFFUN  -  X=   2.759#E ##    AVM=   5.8266E 25
REACTION  1    RATES  3.#####E-13  2.8#326E #1    PRODS  1.944##9E-11  4.82489E-1#    POWERS  #.#####E-#1  2.#####E ##
REACTION  2    RATES  4.39#83E-34  2.44#4#E-1#    PRODS  5.81264E-12  4.9#4#9E-14    POWERS  #.#####E-#1  3.#####E ##
    1  #.#####E-#1  #.#####E-#1      2  2.1#4#E-#5  #.#####E-#1      3  1.22#1E-#6 -1.#216E-#6      4  1.3283E-#5  1.1#48E-1#
    5  6.#252E #4 -3.125#E #4      6  9.2421E #3  3.499#E #1
 3    -2#.683  -13.312  -14.1#5  -24.978  -17.439  -27.1#4  -14.361  -27.656  -26.638  -27.776  -34.644  -29.764  -23.185  -24.574
   -25.538  -35.#48  -38.57#  -17.39#    2.###
```

ION NUMBER DENSITY AND CONDUCTIVITY AT POINT 3

	ION	DENS (M-3)		ION	DENS (M-3)		ION	DENS (M-3)		ION	DENS (M-3)
1	K+	3.285E 19	2	NA+	2.352E 16						
1	ALO-	5.619E 16	2	ALO2-	5.#6#E 18	3	BO2-	9.682E 16	4	CO2-	7.715E 15
5	CL-	2.36#E 16	6	FEO-	2.4#8E 15	7	FEO2-	1.517E 18	8	HCO3-	1.898E 15
9	K-	2.7#4E 15	1#	XO-	5.764E 16	11	NO2-	3.828E 15	12	NAO-	1.276E 15
13	O-	3.711E 16	14	OH-	5.3##E 17	15	O2-	7.366E 15	16	PO2-	5.#48E 18
17	SO-	2.069E 15	18	SO2-	4.616E 16						

CONDUCTIVITY = 3.7257 (MHO/M)

```
DIFFUN  -  X=   3.##9#E ##    AVM=   5.1821E 25
REACTION  1    RATES  3.#####E-13  2.86983E #1    PRODS  1.39#32E-11  3.25379E-1#    POWERS  #.#####E-#1  2.#####E ##
REACTION  2    RATES  4.45617E-34  1.1#755E-1#    PRODS  5.#8635E-12  3.19#18E-14    POWERS  #.#####E-#1  3.#####E ##
    1  #.#####E-#1  #.#####E-#1      2  2.1#4#E-#5  #.#####E-#1      3  9.8468E-#7 -8.6349E-#7      4  1.3283E-#5  5.76##E-11
    5  5.283#E #4 -2.8146E #4      6  9.25#9E #3  3.5994E #1
 4    -2#.813  -13.382  -14.147  -25.#5#  -17.534  -27.447  -14.415  -27.81#  -26.871  -28.#5#  -34.9#4  -29.836  -23.23#  -24.6##
   -25.589  -35.228  -38.81#  -17.598    2.###
```

ION NUMBER DENSITY AND CONDUCTIVITY AT POINT 4

	ION	DENS (M-3)		ION	DENS (M-3)		ION	DENS (M-3)		ION	DENS (M-3)
1	K+	2.661E 19	2	NA+	1.815E 16						
1	ALO-	4.136E 16	2	ALO2-	4.11#E 18	3	BO2-	7.643E 16	4	CO2-	5.425E 15
5	CL-	1.855E 16	6	FEO-	1.496E 15	7	FEO2-	1.#48E 18	8	HCO3-	1.436E 15
9	K-	2.#19E 15	1#	XO-	2.814E 16	11	NO2-	2.676E 15	12	O-	2.514E 16
13	OH-	3.912E 17	14	O2-	4.934E 15	15	PO2-	4.532E 18	16	SO-	1.475E 15
17	SO2-	3.613E 16									

CONDUCTIVITY = 3.41## (MHO/M)

```
DIFFUN  -  X=   3.259#E ##    AVM=   4.5*69E 25
REACTION  1    RATES  3.#####E-13  2.85826E #1    PRODS  9.78171E-12  2.11183E-1#    POWERS  #.#####E-#1  2.#####E ##
REACTION  2    RATES  4.5176#E-34  4.78571E-11    PRODS  5.8J#25E-12  2.#4157E-14    POWERS  #.#####E-#1  3.##u##E ##
    1  #.#####E-#1  #.#####E-#1      2  2.1#4#E-#5  #.#####E-#1      3  7.88#7E-#7 -7.1168E-#7      4  1.3283E-#5  2.94#6E-11
    5  4.6178E #4 -2.5898E #4      6  9.26##E #3  3.6765E #1
 5    -2#.945  -13.454  -14.19#  -25.118  -17.636  -27.817  -14.47#  -27.97#  -27.1#6  -28.339  -35.177  -29.9#6  -23.274  -24.624
   -25.64#  -35.419  -39.#64  -17.819    2.###
```

ION NUMBER DENSITY AND CONDUCTIVITY AT POINT 5

	ION	DENS (M-3)		ION	DENS (M-3)		ION	DENS (M-3)		ION	DENS (M-3)
1	K+	2.138E 19	2	NA+	1.386E 16						
1	ALO-	2.99#E 16	2	ALO2-	3.292E 18	3	BO2-	5.953E 16	4	CO2-	3.75#E 15

```
  5  CL-          1.438E 16      6  PEO2-        7.088E 17      7  HCO3-        1.074E 15      8  K-           1.487E 15
  9  KO-          2.073E 16     10  NO2-         1.838E 15     11  O-           1.662E 16     12  OH-          2.840E 17
 13  O2-          3.218E 15     14  PO2-         4.058E 18     15  SO-          1.036E 15     16  SO2-         2.739E 16
CONDUCTIVITY =  3.0424  (MHO/M)


DIFFUN  -  X=   3.5098E 00    AVN=   4.0707E 25
REACTION  1    RATES  3.00000E-13  2.84540E 01    PRODS  6.00022E-12  1.31576E-10    POWERS  0.00000E-01  2.00000E 00
REACTION  2    RATES  4.58217E-34  1.97874E-11    PRODS  5.79439E-12  1.29591E-14    POWERS  0.00000E-01  3.00000E 00
    1  0.0000E-01  0.0000E-01     2  2.1040E-05  0.0000E-01     3  6.7819E-07 -5.7050E-07     4  1.3283E-05  1.4846E-11
    5  4.0275E 04 -2.2138E 04     6  9.2693E 03  3.7220E 01
 6    -21.076  -13.526  -14.223  -25.102  -17.746  -28.215  -14.526  -28.138  -27.340  -28.641  -35.458  -29.971  -23.317  -24.646
   -25.690  -35.619  -39.331  -18.051    2.000


                                        ION NUMBER DENSITY AND CONDUCTIVITY AT POINT   6
     ION          DENS (M-3)          ION          DENS (M-3)          ION          DENS (M-3)          ION          DENS (M-3)

  1  K+           1.706E 19      2  NA+          1.049E 16

  1  ALO-         2.124E 16      2  ALO2-        2.600E 18      3  BO2-         4.578E 16      4  CO2-         2.552E 15
  5  CL-          1.101E 16      6  PEO2-        4.676E 17      7  K-           1.082E 15      8  KO-          1.505E 16
  9  NO2-         1.224E 15     10  O-           1.073E 16     11  OH-          2.029E 17     12  O2-          2.043E 15
 13  PO2-         3.627E 18     14  SO2-         2.148E 16
CONDUCTIVITY =  2.6847  (MHO/M)


DIFFUN  -  X=   3.7590E 00    AVN=   3.6029E 25
REACTION  1    RATES  3.00000E-13  2.83152E 01    PRODS  4.70204E-12  7.86130E-11    POWERS  0.00000E-01  2.00000E 00
REACTION  2    RATES  4.64948E-34  7.86972E-12    PRODS  5.78885E-12  8.25135E-15    POWERS  0.00000E-01  3.00000E 00
    1  0.0000E-01  0.0000E-01     2  2.1040E-05  0.0000E-01     3  5.0150E-07 -4.4462E-07     4  1.3283E-05  7.5141E-12
    5  3.5098E 04 -1.9320E 04     6  9.2786E 03  3.7302E 01
 7    -21.203  -13.599  -14.277  -25.239  -17.865  -28.640  -14.582  -28.310  -27.568  -28.954  -35.746  -30.028  -23.357  -24.664
   -25.740  -35.829  -39.610  -18.293    2.000


                                        ION NUMBER DENSITY AND CONDUCTIVITY AT POINT   7
     ION          DENS (M-3)          ION          DENS (M-3)          ION          DENS (M-3)          ION          DENS (M-3)

  1  K+           1.354E 19      2  NA+          7.883E 15

  1  ALO-         1.486E 16      2  ALO2-        2.025E 18      3  BO2-         3.480E 16      4  CO2-         1.713E 15
  5  CL-          8.320E 15      6  PEO2-        3.023E 17      7  KO-          1.078E 16      8  O-           6.769E 15
  9  OH-          1.429E 17     10  O2-          1.264E 15     11  PO2-         3.240E 18     12  SO2-         1.636E 16
CONDUCTIVITY =  2.3437  (MHO/M)
```

THEORETICAL MHD CORE PERFORMANCE

PC = 88.2 PSIA
CASE NO. 2137

	CHEMICAL FORMULA										WT FRACTION (SEE NOTE)	ENERGY CAL/MOL	STATE	TEMP DEG K	DENSITY G/CC
FUEL	C	5.74466	H	4.46442	N	0.07139	S	0.03119	O	0.9062	0.73279	-38252.000	S	298.00	0.0000
FUEL	SI	0.74894	FE	0.1052	AL	0.45115	MG	0.09923	O	2.43164	0.06546	-278002.000	S	298.00	0.0000
FUEL	CA	0.26740	B	0.00575	P	0.0070	O	0.29371			0.01278	-42710.000	S	298.00	0.0000
FUEL	K	0.01486	NA	0.09681	O	0.05583					0.00301	-5400.400	S	298.00	0.0000
FUEL	LI	0.00681	CL	0.00142	F	0.00540					0.00016	-934.000	S	298.00	0.0000
FUEL	K	2.00000	C	1.00000	O	3.00000					0.10500	-274900.000	S	298.00	0.0000
OXIDANT	N	2.00000									0.76539	12552.699	G	1900.00	0.0000
OXIDANT	O	2.00000									0.23461	13240.100	G	1900.00	0.0000

O/F= 6.7655 PERCENT FUEL= 12.8775 EQUIVALENCE RATIO= 1.0500 REACTANT DENSITY= 0.0000

AXIAL STATION (M)

	CHAMBER	THROAT	2.750	3.000	3.250	3.500	3.750
PC/P	1.0000	1.7393	10.043	11.452	13.101	15.020	17.237
P, ATM	6.2030	3.4497	0.5975	0.5239	0.4500	0.3995	0.3481
T, DEG K	2875	2703	2275	2245	2215	2183	2152
RHO, G/CC	7.4750-4	4.6172-4	9.7156-5	8.6415-5	7.6660-5	6.7889-5	6.0085-5
H, CAL/G	261.4	157.6	-85.5	-100.2	-114.9	-129.7	-144.3
S, CAL/(G)(K)	2.1905	2.1905	2.2000	2.2109	2.2131	2.2153	2.2176
M, MOL WT	29.394	29.689	30.354	30.387	30.419	30.450	30.479
(DLV/DLP)T	-1.01335	-1.01087	-1.00540	-1.00497	-1.00455	-1.00415	-1.00376
(DLV/DLT)P	1.2900	1.2516	1.1395	1.1290	1.1185	1.1080	1.0977
CP, CAL/(G)(K)	0.7895	0.7520	0.5895	0.5716	0.5535	0.5351	0.5166
GAMMA (S)	1.1485	1.1475	1.1612	1.1639	1.1670	1.1704	1.1742
SON VEL,M/SEC	966.4	932.0	850.6	845.6	840.5	835.3	830.2
ELEC DENS	6.460 20	2.910 20	2.038 19	1.630 19	1.287 19	1.004 19	7.741 18
IONIC DENS	1.799 21	6.941 20	4.535 19	3.696 19	2.992 19	2.410 19	1.936 19
SIGMA (MHO/M)	14.2235	10.7624	3.7857	3.4108	3.0424	2.6847	2.3437
W/O IONS	15.9547	11.8255	4.0012	3.5961	3.1998	2.8165	2.4526
FREQ (1/SEC)	1.200 12	7.620 11	1.517 11	1.347 11	1.192 11	1.053 11	9.300 10
MACH NUMBER	0.000	1.000	1.558	1.568	1.577	1.587	1.597
AE/AT		1.0000	3.3414	3.7568	4.2349	4.7821	5.4031
CSTAR, FT/SEC		4635	4635	4635	4635	4635	4635
CF		0.660	0.938	0.938	0.938	0.938	0.538
IVAC LB-SEC/LB		177.9	183.1	182.4	181.7	181.0	180.3
ISP, LB-SEC/LB		95.0	135.2	135.2	135.2	135.2	135.2

MOLE FRACTIONS

AL	1.049 -7	1.982 -8	3.816-10	2.889-10	2.147-10	1.567-10	1.126-10
ALF	1.994 -8	7.000 -9	8.499-10	7.404-10	6.528-10	5.640-10	4.831-10
ALH	1.134 -9	1.759-10	1.822-12	1.321-12	9.404-13	6.585-13	4.547-13
ALO	2.0642-6	4.9273-7	1.8305-8	1.4554-8	1.1373-8	8.7369-9	6.6026-9
ALO-	1.4776-6	4.4843-7	2.9044-8	2.4057-8	1.9622-8	1.5758-8	1.2464-8
ALOCL	1.914 -9	6.788-10	7.846-11	6.844-11	5.9901-11	5.0028-11	4.234-11
ALOF	3.7821-7	2.0351-7	8.6986-8	8.4573-8	8.1762-8	7.8544-8	7.4942-8
ALOH	2.1367-6	7.2403-7	8.0107-8	7.0204-8	6.1118-8	5.2690-8	4.5071-8
ALO2	1.2384-5	4.0215-6	3.5301-7	2.9936-7	2.5000-7	2.0545-7	1.6609-7
ALO2-	2.4778-5	1.1512-5	2.6154-6	2.3909-6	2.1611-6	1.9291-6	1.6991-6
ALO2H	8.3253-5	3.9077-5	1.0990-5	1.0357-5	9.6958-6	9.0134-6	8.3175-6
ALO2H2	4.3868-4	2.5543-4	1.4373-4	1.4402-4	1.4594-4	1.4707-4	1.4820-4

AL2O	1.#93 -9	1.266-1#	1.716-12	1.337-12	1.#24-12	7.72#-13	5.734-13
BO	9.364 -9	3.382 -9	1.432-1#	1.#92-1#	8.181-11	6.#2#-11	4.376-11
BO2	1.1322-7	5.64#3-8	6.#433-9	4.9495-9	3.9931-9	3.1733-9	2.486#-9
BO2-	2.29#5-7	1.6732-7	5.##42-8	4.4457-8	3.9#73-8	3.3961-8	2.9193-8
CH2O	1.#91 -9	4.18#-1#	1.9#7-11	1.499-11	1.17#-11	9.#81-12	7.#39-12
CO	6.8485-2	5.555#-2	2.6464-2	2.4843-2	2.3255-2	2.172#-2	2.#262-2
COB	2.526 -8	1.291 -8	1.643 -9	1.417 -9	1.223 -9	1.#5# -9	9.2#8-1#
CO2	1.1350-1	1.283#-1	1.5948-1	1.6124-1	1.6297-1	1.6466-1	1.6626-1
CO2-	1.1914-7	5.7278-8	3.9875-9	3.1558-9	2.4615-9	1.893#-9	1.4369-9
CO3-	1.6#2 -9	7.124-1#	3.565-11	2.729-11	2.#52-11	1.515-11	1.#99-11
CA	1.1993-5	7.566#-6	2.458#-7	1.8275-7	1.3321-7	9.5269-8	6.6984-8
CACL	8.#32 -9	5.173 -9	1.6#7-1#	1.188-1#	8.618-11	6.131-11	4.288-11
CAF	1.38##-7	1.1127-7	6.9797-9	5.47#3-9	4.2164-9	3.1979-9	2.39#3-9
CAF2	9.852-1#	1.169 -9	2.228-1#	1.912-1#	1.623-1#	1.362-1#	1.132-1#
CAO(S)	#.####E #	8.2644-5	7.7465-4	7.3857-4	8.##71-4	8.1114-4	8.1995-4
CAO	1.2165-5	7.1443-6	1.756#-7	1.27#1-7	8.98##-8	6.2##8-8	4.2#2#-8
CAOH	4.87#2-4	4.#843-4	2.9589-5	2.3567-5	1.8496-5	1.431#-5	1.#931-5
CAOH+	6.951 -9	2.5## -9	1.5##-11	9.746-12	6.17#-12	3.811-12	2.3#3-12
CAO2H2	3.1249-4	3.2598-4	4.3287-5	3.6362-5	3.#223-5	2.4867-5	2.#273-5
CL	1.5914-7	9.3158-8	1.5721-8	1.3347-8	1.1183-8	9.246#-9	7.546#-9
CL-	5.6983-8	4.1955-8	1.2198-8	1.2791-8	9.44#9-9	8.1652-9	6.98#9-9
E	4.2154-5	3.1#31-5	1.#536-5	9.48#7-6	8.4456-6	7.4453-6	6.4951-6
F	2.965 -8	1.56# -8	1.871 -9	1.543 -9	1.251 -9	1.##3 -9	7.91#-1#
F-	4.148 -9	2.59# -9	4.45#-1#	3.766-1#	3.143-1#	2.587-1#	2.#99-1#
FE	1.3624-4	1.2784-4	2.#43#-5	1.5988-5	1.2313-5	9.3393-6	6.99#4-6
FEO	1.3938-4	1.4#47-4	2.5134-5	1.9711-5	1.5187-5	1.1497-5	8.563#-6
FEO-	3.56# -8	2.522 -8	1.241 -9	8.7##-1#	5.955-1#	3.979-1#	2.6##-1#
FEO2	2.3926-5	2.66#3-5	5.8696-6	4.6535-6	3.62#4-6	2.763#-6	2.#691-6
FEO2-	3.85##-8	4.2722-8	7.843#-7	6.#987-7	4.6474-7	3.468#-7	2.5367-7
FEO2H2	2.#647-5	2.8846-5	1.21#6-5	1.#344-5	8.7626-6	7.3625-6	6.143#-6
FE3O4(L)	#.#### #	#.### #	8.9751-5	9.42#2-5	9.7967-5	1.#1#9-4	1.#362-4
H	2.9443-3	1.8986-3	4.8394-4	4.2943-4	3.7794-4	3.3##2-4	2.8615-4
H-	2.696 -8	1.#43 -8	4.441-1#	3.381-1#	2.53#-1#	1.863-1#	1.351-1#
HBO2	5.#26#-7	3.6625-7	1.3184-7	1.2#45-7	1.#937-7	9.873#-8	8.867#-8
HCL	3.7#23-7	2.6865-7	8.8855-8	8.#434-8	7.2316-8	6.4593-8	5.7354-8
HCN	3.5#1 -9	1.116 -9	3.114-11	2.362-11	1.776-11	1.328-11	9.918-12
HCO	1.863 -7	3.91# -8	1.551 -9	1.194 -9	9.886-1#	6.85#-1#	5.13#-1#
HCO3-	9.479 -9	6.584 -9	9.8##-1#	8.354-1#	7.#5#-1#	5.897-1#	4.891-1#
HF	9.5166-6	8.9978-6	6.7974-6	6.5868-6	6.3627-6	6.1266-6	5.8817-6
HK	7.584#-6	4.6685-6	1.#242-6	9.#822-7	8.#156-7	7.#472-7	6.18#5-7
HNCO	6.4#8 -9	2.588 -9	1.378-1#	1.##5-1#	8.645-11	6.786-11	5.314-11
HNO	9.2#2#-7	4.329#-7	3.6351-8	2.94#4-8	2.3473-8	1.85##-8	1.44#6-8
HNO2	9.6863-8	4.7796-8	4.2764-9	3.457#-9	2.7536-9	2.16#4-9	1.6697-9
HO2	3.68#6-6	1.8974-6	1.94#2-7	1.5737-7	1.2551-7	9.8362-8	7.5743-8
H2	4.697#-3	3.8#1#-3	1.9722-3	1.8717-3	1.7734-3	1.6785-3	1.5889-3
H2O	5.42#9-2	5.7799-2	6.4598-2	6.4912-2	6.5214-2	6.55##-2	6.5766-2
H2O2	2.7962-7	1.4743-7	1.6395-8	1.3513-8	1.#993-8	8.8261-9	6.9964-9
H2S	4.1189-8	2.1563-8	3.1982-9	2.8#37-9	2.461#-9	2.168#-9	1.9255-9
HS-	1.#54 -8	4.625 -9	3.275-1#	2.665-1#	2.156-1#	1.738-1#	1.399-1#
K	5.6479-3	5.59#8-3	5.4719-3	5.4495-3	5.4221-3	5.3898-3	5.353#-3
K+	7.9651-5	5.2485-5	1.6977-5	1.5479-5	1.4#34-5	1.2654-5	1.1362-5
K-	1.881 -8	1.#47 -8	1.398 -9	1.174 -9	9.758-1#	8.#26-1#	6.537-1#
KBO2	1.6528-5	1.6951-5	1.7694-5	1.773#-5	1.7765-5	1.7799-5	1.7833-5
KCN	2.968 -9	1.156 -9	6.#35-11	4.838-11	3.861-11	3.#76-11	2.455-11
KCL	3.641#-6	3.8662-6	4.241#-6	4.2578-6	4.2739-6	4.2892-6	4.3836-6
KF	6.1126-6	7.##88-6	9.74#4-6	9.9682-6	1.#2#9-5	1.#462-5	1.#725-5
KO	2.1657-4	1.5161-4	4.4966-5	4.#269-5	3.5752-5	3.1456-5	2.7426-5
KO-	2.22#6-7	1.3182-7	1.9455-8	1.6372-8	1.3686-8	1.1164-8	9.#445-9
KOH	4.2399-3	4.4911-3	4.9514-3	4.99#5-3	5.#341-3	5.#82#-3	5.1337-3
KOH+	1.989 -9	5.961-1#	1.671-11	1.245-11	9.133-12	6.598-12	4.7#4-12
K2	2.1549-7	1.485#-7	3.6958-8	3.3393-8	3.##85-8	2.7#5#-8	2.4299-8
K2O2H2	3.7891-9	3.99#2-9	4.#189-9	4.#823-9	4.172#-9	4.2919-9	4.4453-9
LI	2.1538-6	1.7233-6	8.8466-7	8.3331-7	7.8124-7	7.29#9-7	6.7762-7
LIBO2	3.1636-8	2.954#-8	2.3551-8	2.3#32-8	2.2478-8	2.1892-8	2.1286-8

NABO2	3.0051-7	3.0926-7	3.2311-7	3.2404-7	3.2507-7	3.2620-7	3.2745-7
LICL	5.7795-9	5.7279-9	5.1858-9	5.1137-9	5.0335-9	4.9456-9	4.8511-9
LIF	3.4392-8	4.0235-8	6.1127-8	6.2901-8	6.4755-8	6.6677-8	6.8662-8
LIH	1.125 -8	6.489 -9	1.191 -9	1.039 -9	9.002-10	7.759-10	6.661-10
LIO	3.7309-7	2.4834-7	6.4366-8	5.6885-8	4.9768-8	4.3093-8	3.6930-8
LIOH	1.7984-5	1.8742-5	2.0159-5	2.0238-5	2.0317-5	2.0395-5	2.0471-5
MG	5.9020-5	5.6010-5	1.9321-6	1.5306-6	1.2047-6	9.4522-7	7.4295-7
MGF	1.558 -8	1.521 -8	5.133-10	4.0551-10	3.176-10	2.482-10	1.942-10
MGH	2.311 -7	1.410 -7	1.240 -9	8.837-10	6.236-10	4.378-10	3.075-10
MGN	2.911 -8	1.452 -8	6.516-11	4.385-11	2.911-11	1.914-11	1.254-11
MGO	1.6427-4	1.5497-4	4.7378-6	3.6988-6	2.8487-6	2.1849-6	1.6721-6
MGOH	6.6320-5	7.6825-5	4.5258-6	3.7567-6	3.1096-6	2.5753-6	2.1433-6
MGO2H2	1.5798-5	2.0699-5	1.6608-6	1.4178-6	1.2110-6	1.0377-6	8.9585-7
MGSIO3(L)	0.0000 0	0.0000 0	3.0179-4	3.0457-4	3.0690-4	3.0884-4	3.1042-4
N	2.0318-	7.4863-7	3.2241-8	2.4629-8	1.8490-8	1.3649-8	9.9188-9
NCO	1.977 -9	5.760-10	1.0992-11	7.9001-12	5.627-12	3.953-12	2.747-12
NH	8.882 -8	2.945 -8	9.075-10	6.888-10	5.014-10	3.643-10	2.613-10
NH2	6.888 -8	2.772 -8	1.577 -9	1.253 -9	9.866-10	7.703-10	5.980-10
NH3	1.228 -8	5.903 -9	6.075-10	5.120-10	4.300-10	3.605-10	3.026-10
NO	1.1982-2	8.4165-3	2.4899-3	2.2178-3	1.9548-3	1.7040-3	1.4686-3
NO-	1.470 -8	5.110 -9	1.380-10	1.0003-10	7.128-11	4.954-11	3.369-11
NO2	4.9973-6	2.7467-6	3.4034-7	2.8013-7	2.2675-7	1.8034-7	1.4084-7
NO2-	5.255 -8	2.013 -8	1.979 -9	1.557 -9	1.201 -9	9.088-10	6.722-10
N2	6.9452-1	7.0316-1	7.1979-1	7.2066-1	7.2151-1	7.2233-1	7.2311-1
N2O	1.3943-6	7.4285-7	9.2224-8	7.7003-8	6.3531-8	5.1789-8	4.1727-8
NA	2.1891-4	2.2155-4	2.2994-4	2.3028-4	2.3055-4	2.3074-4	2.3086-4
NA+	1.2351-7	6.7714-8	1.2155-8	1.0560-8	9.1003-9	7.7833-9	6.6136-9
NACL	5.3099-8	5.5439-8	5.7103-8	5.7072-8	5.7034-8	5.6989-8	5.6935-8
NAF	8.1087-8	9.0746-8	1.1573-7	1.1768-7	1.1976-7	1.2193-7	1.2419-7
NAH	3.0266-7	2.5238-7	6.0185-8	6.1567-8	5.5403-8	4.9732-8	4.4582-8
NAO	7.7661-6	5.6522-6	1.8758-6	1.6969-6	1.5232-6	1.3561-6	1.1974-6
NAO-	6.791 -9	4.142 -9	6.596-10	5.590-10	4.682-10	3.874-10	3.167-10
NAOH	7.0375-5	7.2929-5	7.4331-5	7.4407-5	7.4704-5	7.4998-5	7.5306-5
O	4.0424-3	2.3906-3	4.1795-4	3.5397-4	2.9520-4	2.4226-4	1.9558-4
O-	8.6832-7	3.6961-7	1.9181-8	1.4621-8	1.0907-8	7.9576-9	5.6792-9
OH	1.0210-2	7.3973-3	2.4402-3	2.1964-3	1.9588-3	1.7303-3	1.5140-3
OH-	3.6023-6	2.0678-6	2.7394-7	2.2759-7	1.8644-7	1.5057-7	1.1998-7
O2	1.9009-2	1.4552-2	5.0026-3	5.2164-3	4.6253-3	4.0391-3	3.4691-3
O2-	1.7835-7	7.7209-8	3.0074-9	2.8701-9	2.1122-9	1.5157-9	1.0601-9
O3	4.744 -9	1.703 -9	5.056-11	3.645-11	2.555-11	1.740-11	1.149-11
PN	4.6565-8	2.7814-8	6.3396-9	5.7073-9	5.1347-9	4.6250-9	4.1803-9
PO	1.8872-6	1.3603-6	5.1234-7	4.7446-7	4.3812-7	4.0373-7	3.7171-7
PO2	1.7899-5	1.8393-5	1.9221-5	1.9255-5	1.9287-5	1.9316-5	1.9342-5
PO2-	1.8803-6	2.1453-6	2.6091-6	2.6361-6	2.6636-6	2.6912-6	2.7180-6
S	2.1778-6	1.0767-6	1.3301-7	1.1293-7	9.5293-8	8.0057-8	6.7120-8
S-	5.036 -9	2.090 -9	1.242-10	9.884-11	7.784-11	6.079-11	4.720-11
SH	4.7587-7	2.3322-7	2.7920-8	2.3635-8	2.0286-8	1.7251-8	1.4701-8
SN	3.081 -8	1.224 -8	7.464-10	6.015-10	4.813-10	3.832-10	3.046-10
SO	9.4168-5	6.5714-5	2.1733-5	1.9894-5	1.8146-5	1.6507-5	1.4992-5
SO-	3.302 -8	1.500 -8	1.069 -9	8.577-10	6.803-10	5.340-10	4.157-10
SO2	8.6346-4	9.0283-4	9.6695-4	9.6983-4	9.7259-4	9.7522-4	9.7767-4
SO2-	1.4608-7	1.0037-7	2.3856-8	2.1016-8	1.8370-8	1.5937-8	1.3728-8
SO3	3.0639-7	2.7412-7	1.6423-7	1.5599-7	1.4746-7	1.3865-7	1.2962-7
SI	1.388 -9	4.644-10	1.478-12	8.476-13	4.659-13	2.452-13	1.237-13
SIC(S)	0.0000 0	0.0000 0	1.451-3	1.5029-3	1.5456-3	1.5798-3	1.6063-3
SIO	2.0654-3	2.0587-3	1.8336-4	1.3783-4	1.0063-4	7.122-5	4.8786-5
SIS	1.403 -9	7.269-10	1.021-11	6.787-12	4.393-12	2.770-12	1.705-12

MOLE FRACTIONS OF MOL SPECIES

AL2O3(L)	4.1227-4	5.4575-4	6.3632-4	6.3696-4	6.3760-4	6.3821-4	6.3880-4
SIO2	2.4182-4	2.7114-4	3.7172-5	3.0043-5	2.4073-5	1.9208-5	1.5351-5
SIO2(L)	0.0000 0	0.0000 0	4.0173-4	4.0213-4	4.0254-4	4.0292-4	4.0329-4

ADDITIONAL PRODUCTS WHICH WERE CONSIDERED BUT WHOSE MOLE FRACTIONS WERE LESS THAN 0.100000E-08 FOR ALL ASSIGNED CONDITIONS

AL(B)	AL(L)	AL+	ALBO2	ALCL	ALCL+	ALCLF	ALCLF2	ALCL2	ALCL2+
ALCL2-	ALCL2F	ALCL3(B)	ALCL3(L)	ALCL3	ALF+	ALF2	ALF2+	ALF2-	ALF3(B)
ALF3(S)	ALF3	ALN(B)	ALN	ALO+	ALON+	ALON-	AL2CL6	AL2F6	AL2O+
AL2O2	AL2O2+	AL6O13SI2	ALS	B(S)	B(L)	B	B+	BCL	BCL+
BCLF	BCLO	BCL2	BCL2+	BCL2-	BCL2N	BCL3	BF	BF2	BF2+
BF2-	BF3	BH	BHF2	BH2	BH2O2	BH3	BN(S)	BN	BO-
BOCL	BOF	BOF2	BS	B2	B2O	B2O2	B2O3(L)	B2O3	B3O3CL3
B3O3F3	C(B)	C	C+	C-	CAL	CB	C3-	C2N-	CCL
CCL2	CCL3	CCL4	CF	CF+	CF2	CF2+	CF3	CF3+	CF4
CH	CH+	CH2	CH3	CH4	CHCL	CN	CN+	CN-	CNN
CN2	COCL	COCL2	COF	COF2	COS-	CO4-	CP	CS	CS-
CS2	C2	C2-	C2CL2	C2F2	C2F4	C2H	C2HF	C2H2	C2H4
C2H6	C2N	C2N2	C2O	C3	C3O2	C4	C5	CA(B)	CA(S)
CA(L)	CA+	CACO3(B)	CACO3(S)	CACL2(B)	CACL2(L)	CACL2	CAF2(B)	CAF2(S)	CAF2(L)
CAO(L)	CAO2H2(B)	CAS(B)	CASO4(B)	CL+	CLCN	CLF	CLF3	CLMO	CLO
CLO-	CLO2	CLO2-	CLP	CL2	CL2O	FCN	FO	FO2	F2
F2O	FE(B)	FE(S)	FE(B)	FE(L)	FECL	FECL2(B)	FECL2(L)	FECL2	FECL3(B)
FECL3(L)	FECL3	FEO(B)	FEO(L)	FEO2H2(B)	FEO3H3(B)	FES(B)	FES(B)	FES(S)	FESO4(B)
FES2(B)	FE2CL4	FE2O3(B)	FE2S3(L)	FE2S3O12(B)	FE3O4(B)	H+	HALO	HBO	HBO+
HBS	HBS+	HCO+	HCP	HNO3	HOF	HSO3F	H2O(B)	H2O(L)	H2P
H2SO4(L)	H2SO4	H3B3O6	H3O+	HP-	HSI-	K(B)	K(L)	KCL(B)	KCL(L)
KF(B)	KF(L)	KOH(L)	KOH(B)	KHF2(B)	KHF2(L)	KHF2(L)	K2CO3(B)	K2CO3(L)	K2F2
KOH(B)	KOH(L)	K2O(B)	K2SO4(B)	K2SO4(B)	K2SO4(L)	LI(B)	LI(L)	LI+	LI-
NA-	LICL(B)	LICL(L)	LIF(B)	LIF(L)	LIF2-	LIFO	LIH(B)	LIH(L)	LIN
LINAO	LIO-	LIOH(B)	LIOH(L)	LIOH+	LION	LI2	LI2CL2	LI2F2	LI2O(B)
LI2O(L)	LI2O	LI2O2	LI2O2H2	LI3CL3	LI3F3	MG(B)	MG(L)	MG+	MGCO3(B)
MGCL	MGCL+	MGCLF	MGCL2(B)	MGCL2(L)	MGCL2	MGF2(B)	MGF2(L)	MGF2	MGO(B)
MGO(L)	MGOH+	MGS(B)	MGS	MGSO4(B)	MGSO4(L)	MGSIO3(B)	MGSIO3(B)	MGSIO3(S)	MG2F4
MG2SIO4(B)	MG2SIO4(L)	NF	NF2	NF3	NOCL	NO+	NOF	NOF3	NO2CL
NO2F	NO3	NO3-	N2H4	N2O+	N2O4	N2O5	N3	NA(B)	NA(L)
NACL(B)	NACL(L)	NAF(B)	NAF(L)	NAF2-	NAOH(B)	NAOH(L)	NAOH+	NA2	NA2CO3(B)
NA2CO3(B)	NA2CO3(L)	NA2CL2	NA2F2	NA2O(B)	NA2O(B)	NA2O(L)	NA2O2H2	NA2SO4(B)	NA2SO4(B)
NA2SO4(B)	NA2SO4(L)	NA2SO4	O+	OH+	P	P(B)	P+	P-	PCL3
PF3	PF5	PH	PH3	PO-	PS	P2	P4	S(B)	S(L)
S+	SF4	SF6	SOF2	SO2CL2	SO2CLF	SO2F2	SO3-	S2	S2-
SS	SI(B)	SI(L)	SI+	SI-	SIC	SIC2	SICL	SICL2	SICL3
SICL4	SIF	SIF2	SIF3	SIF4	SIH	SIH+	SIH4	SIN	SIO2(B)
SIO2(B)	SIO2(B)	SI2	SI2C	SI2N	SI3	AL2O3(B)			

NOTE. WEIGHT FRACTION OF FUEL IN TOTAL FUELS AND OF OXIDANT IN TOTAL OXIDANTS

☆U.S. GOVERNMENT PRINTING OFFICE: 1978-740-306/4334 REGION NO. 4