Conf-9010243--10

CONF-9010243--10

DE91 006325

Neutron Detectors at IPNS*

R. K. Crawford, J. R. Haumann, and G. E. Ostrowski

Argonne National Laboratory, Argonne, IL 60439.

To be Presented at

The International Collaboration on Advanced Neutron Sources,
ICANS-XI Meeting

Tsukuba, Japan

October 22-26, 1990

DISCLAIMER

This report was prepared as an account of work sponsored by an agency of the United States Government. Neither the United States Government nor any agency thereof, nor any of their employees, makes any warranty, express or implied, or assumes any legal liability or responsibility for the accuracy, completeness, or usefulness of any information, apparatus, product, or process disclosed, or represents that its use would not infringe privately owned rights. Reference herein to any specific commercial product, process, or service by trade name, trademark, manufacturer, or otherwise does not necessarily constitute or imply its endorsement, recommendation, or favoring by the United States Government or any agency thereof. The views and opinions of authors expressed herein do not necessarily state or reflect those of the United States Government or any agency thereof.

*Work supported by U.S. Department of Energy, BES, contract No. W-31-109-ENG-38.

MASTER

DISTRIBUTION OF THIS DOCUMENT IS UNLIMITED

Neutron Detectors at IPNS*

R. K. Crawford, J. R. Haumann, and G. E. Ostrowski
Argonne National Laboratory, Argonne, IL 60439.

ABSTRACT

The heart of each time-of-flight neutron scattering instrument is its complement of detectors and the associated encoding and counting electronics. Currently there are ten fully-scheduled neutron scattering instruments in operation at IPNS, with three more instruments under development. Six of these instruments use position-sensitive neutron detectors (PSDs) of various types. These PSDs include a 30 cm x 30 cm, ~3 mm resolution, neutron Anger camera area PSD with ^{6}Li-glass scintillator; a 2.5 cm dia, ~0.7 mm resolution, microchannel-plate area PSD with ^{6}Li-glass scintillator; a 20 cm x 20 cm, ~5 mm resolution, ^{3}He proportional counter area PSD; a 40 cm x 40 cm, ~4 mm resolution, ^{3}He proportional counter area PSD; a flat 25 cm long, ~1.6 mm resolution, ^{3}He proportional counter linear PSD; and 160 cylindrical ^{3}He proportional counter linear PSDs, each of which is 1.27 cm in dia and 60 cm long and has ~14 mm resolution. In addition to these PSDs, ~750 standard cylindrical ^{3}He proportional counters of various sizes are utilized on IPNS instruments, and ~20 BF_3 pulsed ion chambers are in use as beam monitors. This paper discusses these various detectors and associated electronics, with emphasis on the instrumental specifications and the reasons for the selection of the different types of detectors. Observed performance of these detectors is also discussed.

I. INTRODUCTION

A large number of standard detectors and position-sensitive neutron detectors (PSDs) are in use on the thirteen IPNS neutron scattering instruments. (Three of these instruments are still under development.) IPNS instruments now utilize nearly 800 standard neutron detectors (^{3}He proportional counters or BF_3 pulsed ion chambers) of various sizes. In addition, six of these instruments are based primarily on the use of PSDs. All IPNS instruments operate using the time-of-flight (TOF) principle, so they must all have their resulting raw data binned into histograms with both time (neutron TOF) and spatial (angular) dimensions. The data acquisition electronics and

*Work supported by U.S. Department of Energy, BES, contract No. W-31-109-ENG-38.

The submitted manuscript has been authored by a contractor of the U. S. Government under contract No. W-31-109-ENG-38. Accordingly, the U. S. Government retains a nonexclusive, royalty-free license to publish or reproduce the published form of this contribution, or allow others to do so, for U. S. Government purposes.

software for the IPNS instruments have been described elsewhere,[1-4] so this paper will focus on details of the detectors used on the different instruments, the reasons for these particular choices of detectors, and the performances which have been achieved with these detectors at IPNS. Some aspects of the IPNS PSDs have recently been discussed elsewhere,[5] but are summarized here for completeness.

II. BEAM MONITORS AT IPNS

Incident Beam

The incident-beam monitor is a low-efficiency detector located upstream from the neutron-scattering sample. This detector samples the entire incident beam and provides continuous monitoring of the intensity and wavelength distribution of the neutrons in this beam. Because the beam always passes through this monitor, the monitor must be designed to produce only a minor perturbation on the incident beam. Thus the detection efficiency of this monitor must be kept quite low and the monitor must be designed so it scatters very few neutrons. Most IPNS instruments use flat ionization chambers operating in the pulse mode, which span the entire beam to monitor the incident beam intensity as a function of TOF. Although similar detectors are used in the chopper instruments, the functions in this case are to monitor the total incident intensity and to measure the shape and position (in TOF) of the pulse transmitted by the chopper.

These ion chambers are commercially available detectors (Reuter-Stokes, Twinsburg, OH, USA; models RS-P1-3402-101(or -103) or RS-P1-6802-101(or -103)) with an active volume which is ~2.5 cm thick and either 7.6 or 15.3 cm in dia. These monitor detectors have Al bodies and windows and are filled to ~1 atm with a fill gas which is a mixture of Ar, CH_4, and CO_2, with sufficient BF_3 added to achieve the desired detection efficiency, usually in the range 10^{-3} - 10^{-5} for thermal neutrons. Measurements indicate that the sensitivity of these detectors is quite uniform over the active volume, so they provide an accurate sampling of the entire beam. Neutron detection efficiencies have been found to be proportional to neutron wavelength, as expected, over the full wavelength range of interest to the IPNS instruments. This type of detector was chosen because of their commercial availability, uniform sampling of the entire beam, well known variation of efficiency with wavelength, resistance to radiation damage, and relative insensitivity to both gamma rays and fast neutrons.

Early experience using a variety of both commercial and Argonne-built charge-sensitive preamplifiers with these detectors was not entirely satisfactory. Because of the hydrogen atoms in the CH_4 component of the fill gas, the detectors have some sensitivity to high-energy neutrons. At the TOF values at which most measurements are made, pulses from these high-energy neutrons are easily eliminated by pulse-height discrimination. However immediately following the proton pulse on the target, these detectors are bombarded with a very high instantaneous flux of high-energy neutrons, and this led to severe overload of the preamplifiers. On most beamlines this overload was sufficient to completely "black out" the detector so that it was unable to count for the first few hundred microseconds after the proton pulse. Even after the detector system had resumed counting, the TOF spectrum it measured was distorted for additional hundreds of microseconds as the

baseline recovery from the overload shifted the detector pulse-height spectrum relative to the discriminator window. For most instruments this overload recovery occurred before the TOF range of interest, so it was no problem. On other instruments, the intensity of such fast neutrons was significantly reduced by a filter or a chopper, so such overload did not occur and recovery was never a problem.

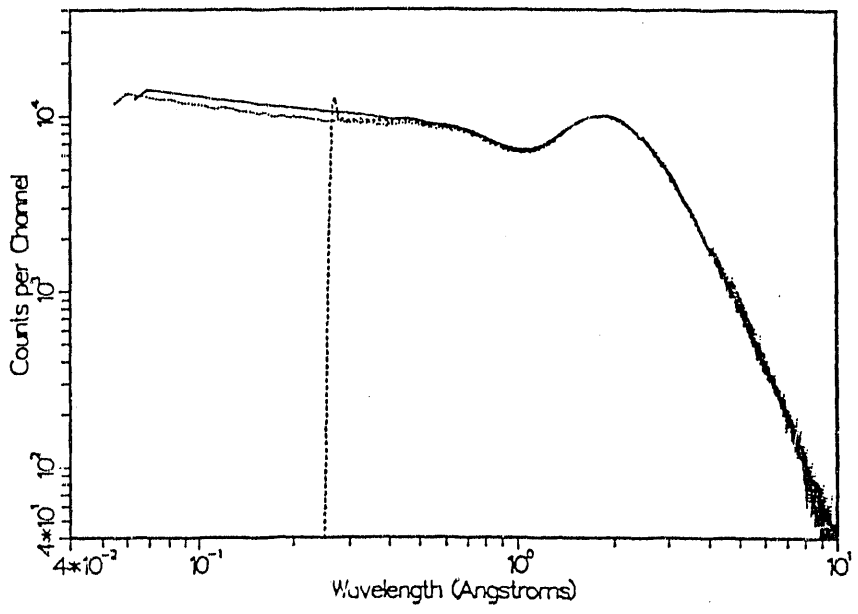

Figure 1. Beam monitor raw data (not corrected for efficiency) measured on the H1 beamline at IPNS using a BF_3 ionization chamber. Dashed line - original preamplifier/amplifier; Solid line - new bipolar preamplifier/amplifier; Dotted line - same new preamplifier and same detector, but in a location further downstream where the incident intensity was attenuated by a factor of 6. All were arbitrarily scaled to match at the Maxwellian peak. Note that with the old preamplifier the detector was effectively "dead" for wavelengths below ~0.25 Å and the spectrum was somewhat distorted for wavelengths just above this. The small discrepancies at short wavelengths between the two measurements with the new preamplifier/amplifier are not yet fully understood and may represent real spectral differences at the two beam locations. Small differences at the longer wavelengths are due to differing numbers of Al windows upstream from the detector.

However, there was still interest in pressing the capabilities on some instruments to shorter and shorter wavelengths, so it became important to minimize or eliminate such overload effects. This has been accomplished by the development of a preamplifier/amplifier combination which produces a short bipolar pulse tailored to result in no baseline shift. Figure 1 shows a comparison of the spectra measured on one of the IPNS beamlines with this new preamplifier/amplifier and one of our older versions, both with the same detector in the same location. The improvement achieved with the new preamplifier is evident in the figure. This figure also includes the spectrum measured in another location on the same beam where the incident intensity has been attenuated by a factor of ~6, showing that the spectra as measured with these beam monitors are not data rate dependent at any of the rates encountered at IPNS.

Several other types of beam monitors have been tried at IPNS. One of these was a gas proportional counter with a planar geometry, having CF_4 with a small amount of ^3He as the fill gas. This detector worked quite well for short periods of time, but its efficiency was found to

degrade by a factor of ~2 per month of operation. Inspection of this detector after disassembly indicated that the degradation was due to a film of unknown composition which had been plated on the anode, presumably because of the chemical reactions occurring in the highly-ionized fill gas near the anode.

Another unsuccessful beam monitor attempt was the use of Si surface barrier detectors with a ^{6}Li coating. These were commercial charged-particle detectors (EG&G Ortec, Oak Ridge, TN, USA; Series A silicon surface-barrier detector) which had ^{6}Li evaporated onto their front surfaces so that either the alpha particle or the triton from the reaction

$$^6\mathrm{Li} + \mathrm{n} \rightarrow {}^3\mathrm{He} + {}^4\mathrm{He} + 4.79\ \mathrm{MeV} \qquad (1)$$

was detected in the surface-barrier detector. Detection efficiency was determined by the deposition density of the ^{6}Li layer, which was chosen to be 9.5 μgm/cm^2 to give an efficiency of ~5x10^{-4} for 1 Å neutrons, increasing linearly with wavelength. The thin single-crystal of high-purity Si (resistivity 6.0 KΩ-cm) which formed the bulk of the detector produced little neutron absorption or scattering in the relatively long-wavelength range of interest to the Small-Angle Diffractometer (SAD), and so transmitted the neutrons not absorbed in the ^{6}Li with little or no perturbation. This detector worked quite well initially, but over the period of roughly one year its performance degraded to the point where it was no longer usable. This degradation was attributed to radiation damage. Subsequent tests with other similar detectors showed that detectors made with higher purity Si (resistivity 8.4 KΩ-cm) degraded much faster, as would be expected from this mechanism, and no detector of this type was found to provide satisfactory long-term stability.

Transmitted Beam

The transmitted beam monitor is located downstream from the neutron-scattering sample, and is used to measure the intensity and wavelength distribution of the neutrons transmitted through the sample. On the chopper instruments, the transmitted beam monitor data are also used in conjunction with the incident beam monitor data to determine precisely the energy of the chopped pulse of neutrons and the arrival time of this pulse at the sample position. Many of the IPNS instruments also use flat pulsed ionization chambers of the type described above as transmitted beam monitors.

Several IPNS instruments instead use a pinhole mask in front of a high-efficiency ^{3}He gas proportional counter to monitor the beam transmitted through the samples. In this case, the detector is frequently of the same type as that used to detect the scattered neutrons, so that detector efficiencies do not enter the data reduction. One such monitor is described elsewhere in these proceedings.[6] On SAD, a proportional counter detector and associated mask are mounted on a computer-interfaced translation stage so they can automatically be inserted into the beam whenever transmission measurements are to be made, and can otherwise be completely withdrawn from the path of the scattered neutrons.

III. STANDARD DETECTORS AT IPNS

Cylindrical ^{3}He-filled gas proportional counters are used as detectors on many of the IPNS instruments. These detectors were chosen because of their low intrinsic backgrounds, high reliability, and commercial availability (Reuter Stokes, Twinsburg, OH, USA; most IPNS detectors are models RS-P4-0415-101, RS-P4-0818-150, or RS-P4-0205-201, but small numbers of several other models are in use). Table I indicates the variety of sizes and fill pressures and the numbers of such detectors in use at the present time on the various IPNS instruments. Nearly all of these detectors have Al walls coated on the inside with Ni. When sufficient attention is paid to shielding against the cosmic ray and other natural backgrounds, intrinsic background count rates below 0.1 count/minute are routinely achieved for such detectors.

Table I - Standard ^{3}He Proportional Counters at IPNS

Instrument[a]	Standard ^{3}He Detectors	Diameter	Active Length	^{3}He Fill Pressure
EVS	16	1.59 cm	20.3 cm	6 atm
GPPD	142	1.27	38.1	10
HRMECS	~240	2.54	45.7	6
LRMECS	116	2.54	45.7	6
	40	2.54	22.9	6
	4	2.54	11.4	6
PHOENIX	32	2.54	45.7	6
POSY	1 [b]	0.64	2.5	20
POSY-II	1 [b]	0.64	2.5	10
QENS	34	0.64	12.5	10
SEPD	120	1.27	38.1	10
	~ 746			

a EVS → eV spectrometer/low-resolution diffractometer
GPPD and SEPD → powder diffractometers
HRMECS, LRMECS, and PHOENIX → chopper spectrometers
POSY and POSY-II → neutron reflectometers
QENS → quasielastic spectrometer
b Masked and used as beam monitors.

Because of the large numbers of such detectors involved, relatively inexpensive preamplifier/amplifiers and discriminator/time-encoders were developed for these detectors, with identical electronics being used on all instruments utilizing such standard detectors. Most of these electronics have been described previously.[1,2] Many of the detectors on HRMECS and all of the detectors on LRMECS (Table I) are operated in the vacuum of the scattering flight path, but all external high-voltage connections, preamplifiers, etc. are located outside this vacuum. For all instruments, the high-voltage connections and preamplifiers are contained in a controlled environment of dry nitrogen gas. Careful control of this environment was found to be necessary in order to prevent the high background counting rates which would otherwise result from high-voltage breakdown due to the humidity in the air in the IPNS experimental hall. In all cases,

careful attention has been paid to detector grounding and other sources of ground loops, and to electromagnetic shielding of all components in the signal train. These precautions have, in most cases, prevented contamination of the collected data by the high levels of electromagnetic noise from the accelerator system and other sources which are always present in the experimental hall during operation.

IV. PSDs AT IPNS

Six of the IPNS instruments use PSDs in order to provide the necessary angular resolution and coverage. Table II lists these six instruments and provides some of the specifications for the associated PSDs, which are discussed individually in the sections below.

Table II - PSDs at IPNS

	SCD	SAD	new[a]	POSY	POSY-II	GLAD
Number of PSDs	1	1	1	1	1	160
PSD type	Anger	Prop.	Prop.	Micro.	Prop.	Prop.
Encoding method[b]	Anger	RT	RT	CD	RT	CD
Encoded dimensions	2	2	2	2	1	1
Encoded channels (x,y)	128x128	256x256	256x256	256x256	256	64
Histogram channels (x,y)	85x85	64x64	128x128	128x1	256	64
Active mat'l/pressure (atm)	^{6}Li glass	^{3}He/1.3	^{3}He/2.6	^{6}Li glass	^{3}He/2.6	^{3}He/10
Stopping gas/pressure (atm)	--	CF_4/0.7	CF_4/1.4	--	CF_4/1.4	Ar/2
Active area (cm)	30x30	20x20	40x40	2.5 dia	5x20	1.1x60[c]
Active depth (mm)	2	32	25	0.5	25	11[b]
Resolution (mm fwhm)	3.5	3-9[d]	4-6[d]	0.7	1.6[d]	14
Dead-time (μs)	~3	~10	~5	~8	~10	8
Efficiency at 1.8 Å	0.98	0.55	0.61	0.63	0.61	0.77[e]
Efficiency at 0.6 Å	0.73	0.23	0.27	0.28	0.27	0.39[e]

a New small-angle diffractometer.
b RT stands for rise-time encoding, CD for charge-division encoding.
c GLAD detectors are cylindrical, 1.27 cm outside dia x 60 cm long.
d Depends on electronics. There is a tradeoff with linearity and dead-time.
e Efficiency averaged over cylinder.

Anger Camera

A neutron Anger camera with ^{6}Li-glass scintillator, which was developed and built at Argonne, is used as an area PSD on the Single Crystal Diffractometer (SCD).[7] This instrument uses the time-of-flight Laue technique to obtain diffraction data from single crystals. Figure 2 provides a schematic representation of the Anger camera detector, indicating its use on SCD. This

detector, which has been described in detail elsewhere,[8] has an active area of 30 x 30 cm^2, with a resolution of ~3.5 mm fwhm and a dead-time of ~3 μs per event. The 2 mm thick ^{6}Li-glass scintillator which is the active material on this detector provides a detection efficiency of ~66% for 0.5 Å neutrons. If the detection volume were thicker, parallax would result in a serious degradation of the resolution because the detector is normally operated only ~30 cm from the scattering sample. This good spatial resolution, negligible parallax, high efficiency at short wavelengths, and the short dead-time were the primary reasons a detector of this type was developed for this instrument. The electronics encode the 30 x 30 cm^2 active area as 128 x 128 pixels, and also provide sufficient additional information so that accurate dead-time corrections can be made on the data as a function of TOF. The ^{6}Li-glass scintillator material has appreciable gamma-ray sensitivity, so lithium carbonate enriched with ^{6}Li, which produces no gammas upon absorption of neutrons, was used as the shielding material close to the detector. This, combined with pulse-height discrimination and the careful use of other shielding materials, has reduced the detected gamma and fast-neutron backgrounds to acceptable levels.

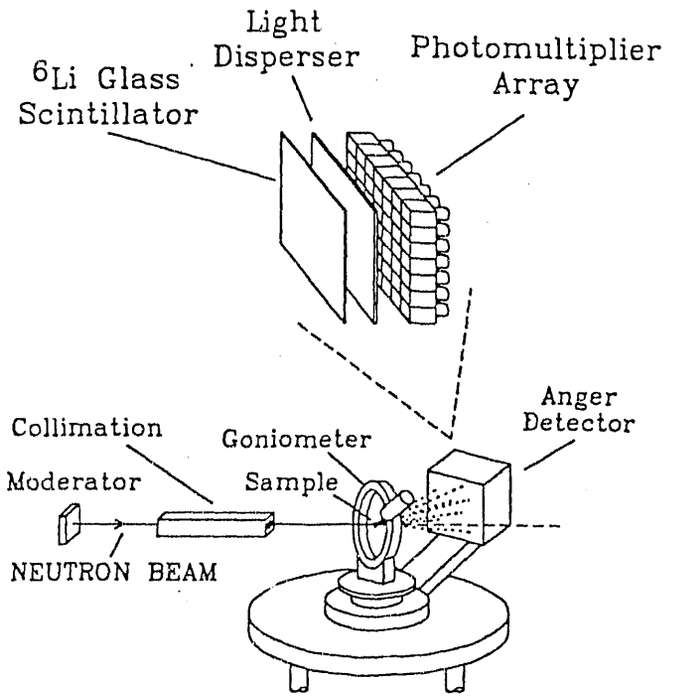

Figure 2. Schematic exploded view of the Anger camera area PSD and a representation of its use on SCD. In normal use, the light disperser plate of the Anger camera is in direct contact with the face of the photomultiplier array, and the 2 mm thick glass scintillator plate is separated from the disperser plate by a thin air gap which serves to truncate the scintillation light cone. The output of each 5.1 cm square photomultiplier is resistor-weighted according to its x and y coordinates, and the normalized sums of the weighted signals are used to determine the centroid of the cone of scintillation light from the neutron absorption event.

Area Proportional Counters

The small-angle diffractometer SAD has been in operation for a number of years,[9] and a second small-angle diffractometer[10] is currently being developed. Both of these instruments utilize

rise-time-encoded ^{3}He proportional counter area PSDs located in line with the direct beam to make measurements at small scattering angles. Figure 3 shows one of these PSDs schematically, and also indicates its use on the instrument. These instruments utilize a large wavelength range in order to span a large dynamic Q-range. The scattering signal is usually quite weak over some parts of this range, so the low intrinsic background counting rate and relative insensitivity to gamma rays and high-energy neutrons of a proportional counter are distinct advantages. Because of the relatively large sample-detector distances on these instruments (1.5-2.0 m), the parallax associated with the thick active volume of these detectors is not a significant problem.

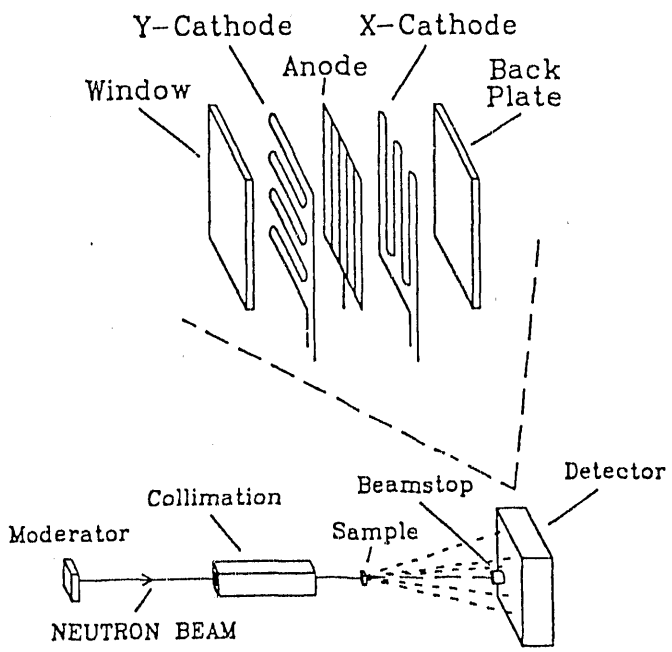

Figure 3. Schematic representation of the arrangement of the electrodes in the proportional-counter area PSDs. Use of one of these PSDs on a small-angle diffractometer is also shown schematically. Wire spacing is 2 mm in the SAD detector and 4 mm in the detector for the new small-angle diffractometer, requiring ~100 loops for each of the actual cathodes in both cases.

The area PSD used on SAD was built as a joint effort by Argonne National Laboratory and Oak Ridge National Laboratory personnel.[9] It has an active volume 20 x 20 cm^2, 3.2 cm thick, which was originally filled with a mixture of ^{3}He, Xe, and CO_2 to a pressure of ~5 atm. However, in order to reduce the gamma sensitivity still further, it was later refilled with a mixture of 65% ^{3}He and 35% CF_4 to a total pressure of 2 atm. This detector has been in continuous operation for more than 10 years with only this one change of fill-gas, and has shown no sign of degradation over this period. The detector is of the Borkowski-Kopp[11] type, in which an anode plane in the center is sandwiched between two single-wire cathode planes as indicated schematically in Fig. 3. The wires in the two cathode planes are strung in zig-zag patterns with 2 mm spacing. The wire directions in the front plane are orthogonal to those in the rear (Fig. 3) so the x-position can be derived from the signals from one of these cathode planes and the y-position can be derived from the other plane. The intrinsic RC time-constant for each cathode is ~0.8 μs. The 8-bit-each digital x and y positions are produced using rise-time encoding[11] with a direct-time-digitizer[12] operating on the signals from each cathode. Most events due to gammas or to fast neutrons are eliminated by pulse-height

discrimination. The best resolution so far determined from actual neutron measurements is ~5 mm fwhm. This value is very sensitive to the quality of the preamplifiers and encoding electronics, and to the time constants used for shaping the signals prior to encoding. Since the nominal resolution of ~3 mm has not yet been achieved, some current developments are aimed at further improvements in resolution. The position encoding exhibits some nonlinearity over the entire detector, and this becomes much worse near the detector edges. The extent of these nonlinearities can be modified by the choice of shaping time-constants as well as by the type of termination impedance used at the ends of the detector cathodes. However, even the best results that have been achieved so far have left nonlinearities around the detector edges, and these were still so bad that an appreciable amount of data from regions around the detector edges had to be discarded (using software masks), leading to a useful active area of ~17 x 17 cm^2. Detailed simulations of the detector and associated circuitry, coupled with an active electronics development program, are underway in an attempt to eliminate the encoding nonlinearity and to improve the spatial resolution.

The PSD to be used on the new small-angle diffractometer is a commercial unit (Ordela, Inc, Oak Ridge, TN, USA; model 2400N) with construction, fill gas, and encoding electronics similar to those of the SAD detector. The active volume in this PSD is 40 x 40 cm^2, 2.5 cm thick, filled to 4 atm with the same ^3He-CF_4 mixture as above. The best resolution so far achieved in actual neutron measurements on this detector is ~6 mm fwhm, while the nominal resolution is ~4 mm fwhm, so efforts to modify the encoding electronics to improve the resolution are continuing. Linearity problems similar to those found for the SAD detector have also been found for this detector, and in fact the simulations so far indicate that such linearity problems are inherent to the rise-time encoding method.

On both of these instruments the area PSDs are operated with part of the active area in line with the direct beam (Fig. 3), in order to achieve the required small scattering angles. A small beamstop immediately in front of the detectors is used to eliminate as much of the direct beam as possible, but the high-energy neutrons which arrive within a very short time at the beginning of the time-frame are not sufficiently well collimated to be completely removed by this beamstop. The pile-up of pulses from this high instantaneous intensity of fast neutrons led to a significant overload of the detector and electronics at the start of each time-frame, and this was followed by a long (~10 ms) recovery period during which the detector response was subtly distorted. A single-crystal MgO filter was therefore placed in the incident beam of SAD. This removes most of the fast neutrons and eliminates the overload problem, and has had the additional advantage of reducing the background due to delayed fast neutrons. However electronic solutions to the overload problem are also being explored, as there are some types of measurements for which the MgO filter is not desirable.

Microchannel-Plate

The Polarized Neutron Reflectometer (POSY)[13] measures the reflection of polarized neutrons to obtain magnetization density information in thin films or near the surfaces of bulk materials. The detector for this instrument is an area PSD utilizing a microchannel-plate. This detector and its location in the POSY instrument are shown schematically in Fig. 4. Since the detector is located

fairly close to the sample, good spatial resolution at the detector is required to provide the necessary angular resolution. This resolution was the primary reason for this particular choice of detector.

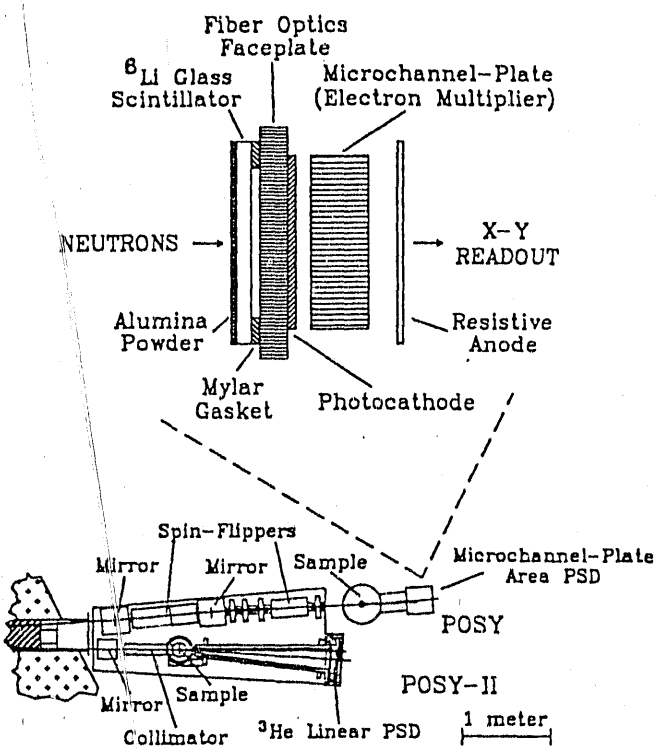

Figure 4. Schematic representation of the microchannel-plate area PSD. A layout of the two neutron reflectometers POSY and POSY-II is also included to show the use of this PSD on POSY. The scintillator glass is 0.5 mm thick and has its front surface is covered with alumina powder which diffusely reflects back some of the scintillation light to enhance the signal. The 0.025 mm thick mylar gasket produces an air gap between the scintillator and optical coupler to truncate the scintillation light cone.

A commercial microchannel-plate photon detector with integral photocathode and resistive anode readout (Surface Science Laboratories, Inc., Mountain View, CA; model 3006-SG) serves as the basis for this area PSD.[13] The addition of a ^{6}Li-glass scintillator, 25 mm dia x 0.5 mm thick, optically coupled to the photocathode of the microchannel-plate assembly (see Fig. 4) provides the necessary sensitivity to neutrons. Schrack[14] has described the operation of a similar neutron detector for a somewhat different purpose. The IPNS detector was supplied with charge-division position encoding electronics to produce a digitized 8-bit-each x,y output from the resistive anode signal. However, the y-encoding was modified at IPNS to give 7 bits of position with the 8th bit optionally used to signal the polarization state of the neutrons. Resolution has been measured with neutrons to be ~0.7 mm fwhm. As for the SCD detector, ^{6}Li-enriched lithium carbonate was used as the shielding material around the detector, with quite low gamma backgrounds as a result.

Linear Proportional Counters

As shown in Fig. 4, a second reflectometer (POSY-II)[10] has been constructed on the same beamline as POSY. The POSY-II instrument uses unpolarized neutrons. A commercial (Ordela,

Inc., Oak Ridge, TN, USA; model 1204N) ^{3}He-proportional-counter linear PSD serves as the detector for this instrument. This detector is planar, with an active volume of 20 x 5 cm^2, 2.5 cm thick. Position encoding is along the long dimension of the detector via rise-time encoding on the signals from the anode. This anode is made of a single carbon-coated quartz fiber which provides a high anode resistance so that good position resolution can be achieved. Measured resolution for this detector is ~1.6 mm fwhm. This spatial resolution yields adequate angular resolution for POSY-II since the sample-detector distance is much longer than on POSY. The much larger angular range covered by the 20 cm active length provides additional versatility for this instrument.

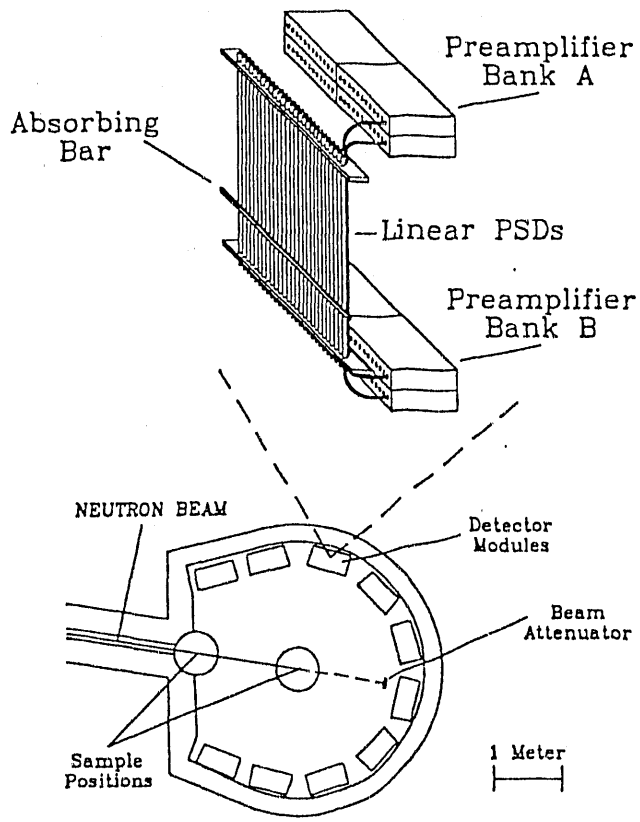

Figure 5. One of the detector modules for GLAD, showing the relative placement of the linear PSDs, preamplifiers, and motor-driven absorbing bar used for calibration. A layout of the GLAD instrument is also shown to indicate the locations of the 10 detector modules.

The Glass, Liquids, and Amorphous Materials Diffractometer (GLAD)[15,16] is optimized to obtain structural information from glasses and liquids. GLAD was designed to use multiple banks (detector modules) of linear PSDs, which permit it to handle high data rates and to cover low scattering angles. One such bank of PSDs is shown schematically in Fig. 5, which also indicates where all the detector modules are located in the instrument. GLAD is just being commissioned, but a prototype flightpath was in operation for two years prior to the installation of GLAD. This prototype enabled the making of extensive preliminary measurements to test the new detector and data acquisition systems and some of the calibration and data analysis procedures.

GLAD contains 160 commercial (Reuter-Stokes, Twinsburg, OH, USA; model RS-P4-0424-104) linear ^{3}He-proportional-counter PSDs at the present time, and this will eventually be

expanded to a total of 408. These detectors are mounted in modules with each module containing from 38 to 53 PSDs, depending on the location of the module in the instrument (Fig. 5). Each PSD is cylindrical with a diameter of 1.27 cm and an active length of 60 cm, and contains 10 atm of ^{3}He plus appropriate stopping gases (mostly Ar). Charge-division encoding is used to encode each of these detectors into 64 segments, and the resulting position resolution is currently measured to be ~14 mm fwhm. (These detectors and the mounting arrangements are similar to those used earlier on a steady-state instrument at the University of Missouri reactor[17] and on the SAN instrument at the KENS pulsed neutron source.[18] The encoding and data acquisition electronics for GLAD, which are quite different from those used in either of these other two instruments, have been discussed in detail elsewhere.[4]) The large integral nonlinearity near the PSD ends produced with the initial charge-division encoding electronics has now been fully understood and cured,[19] so that the entire active length of the detectors can be routinely used. Segments of these PSDs located in line with the direct beam have been successfully used to monitor sample transmissions[6] concurrently with the scattered neutron measurements which utilize the remainder of the segments of these same PSDs.

The GLAD detector mounting assemblies, preamplifiers, encoding modules, and operating software have been designed to facilitate initial tuning of the position encoding, absolute calibration of the encoded positions, and automatic testing for drifts in calibration. These calibration-related features have been described in detail elsewhere.[4,15,16] When the full GLAD detector complement is installed, data rates are expected to be relatively high (in extreme cases up to ~20,000,000 events/sec instantaneous and up to ~300,000 events/sec time-averaged). PSDs were required to provide the necessary angular resolution, particularly at small scattering angles. Since area PSDs typically have severe overall instantaneous data rate limitations and are difficult to fabricate with high efficiency for short-wavelength neutrons, arrays of linear PSDs were used instead. Gas proportional counters were chosen because of their commercial availability, reliability, and low intrinsic background counting rates.

V. SUMMARY

Beam monitors at IPNS are primarily ionization chambers, operated in the pulsed mode. These have been quite satisfactory. They are rugged, have a high degree of reliability, sample the entire beam uniformly, and have a well-defined efficiency variation with wavelength. Recent improvements in the preamplifiers used with these detectors have extended their range of usefulness to very short TOF values.

Most of the standard detectors at IPNS are cylindrical ^{3}He gas proportional counters. These are very reliable and have a very low intrinsic background counting rate. Nearly 750 such detectors are in use on the IPNS instruments at the present time.

Six different instruments at IPNS use neutron PSDs, and several different detector types have been adapted to meet the problems peculiar to these instruments and to their use at a pulsed neutron source. For all of these types of detectors the position encoding has been found to be quite stable and has shown little drift with time. Both the Anger camera and the microchannel-plate area PSDs

have operated satisfactorily for a number of years in their respective applications. The large number of linear PSDs in the GLAD instrument have been in operation for a much shorter period of time. During that time their performance was satisfactory for the requirements of that instrument, but some improvements in the encoding electronics are still being explored. The POSY-II linear PSD and the two small-angle diffractometer area PSDs are rise-time encoded proportional counters. These perform adequately for their present requirements, but have significant encoding nonlinearities near the detector edges. For the area PSDs these nonlinearities are sufficiently severe that portions of the active areas of these detectors are effectively unusable. Improvements in the linearity, spatial resolution, and overload response of these rise-time-encoded detectors and their respective encoding systems are under study.

Acknowledgements

The authors would like to thank numerous persons at Argonne and elsewhere who have contributed to the development of the detectors and electronics at IPNS. Particular thanks are extended to Mike Strauss, Raul Brenner, and Frank Lynch of the Argonne detector development group who were responsible for the Anger camera and the early gas area PSD. The authors would also like to acknowledge many helpful interactions Joe Skarupa and others at Reuter-Stokes, and with Manfred Kopp at Ordela.

References

1. R. K. Crawford, R. T. Daly, J. R. Haumann, R. L. Hitterman, C. B. Morgan, G. E. Ostrowski, and T. G. Worlton. IEEE Trans. Nucl. Sci. NS-28, 3692-3700 (1981).
2. J. R. Haumann, R. T. Daly, T. G. Worlton, and R. K. Crawford. IEEE Trans. Nucl. Sci. NS-29, 62-66 (1982).
3. J. R. Haumann and R. K. Crawford. IEEE Trans. Nucl. Sci. NS-34, 948-953 (1987).
4. R. K. Crawford and J. R. Haumann. IEEE Trans. Nucl. Sci., NS-37, 72-81 (1990).
5. R. K. Crawford, J. R. Haumann, A. J. Schultz, G. P. Felcher, J. E. Epperson, P. Thiyagarajan, D. G. Montague, and R. J. Dejus. Nucl. Instr. and Meth, in press.
6. D. G. Montague, J. M. Carpenter, R. K. Crawford, R. Dejus, D. L. Price, and S. Susman. "Use of a Semi-Opaque Beamstop for Monitoring Sample Transmissions at GLAD", these proceedings.
7. A. J. Schultz and P. C. W. Leung, Jr.. J. Phys. (Paris) Colloq. C5, 137-142 (1986).
8. M. G. Strauss, R. Brenner, H. P. Chou, A. J. Schultz, and C. T. Roche. Position-Sensitive Detection of Thermal Neutrons, ed. P. Convert and J. B. Forsyth, Academic Press, London. pp 175-187 (1983).
9. C. S. Borso, J. M. Carpenter, F. S. Williamson, G. L. Holmblad, M. H. Mueller, J. Faber, Jr., J. E. Epperson, and S. S. Danyluk. J. Appl. Cryst. 15, 443-448 (1982); J. E. Epperson, J. M. Carpenter, R. K. Crawford, P. Thiyagarajan, and T. E. Klippert, unpublished (1990).
10. R. K. Crawford, G. P. Felcher, R. Kleb, J. E. Epperson, and P. Thiyagarajan. Advanced Neutron Sources 1988, Proceedings of the 10th Meeting of the International Collaboration on

Advanced Neutron Sources (ICANS X). Institute of Physics Conference Series Number 97, IOP Publishing Ltd, New York. pp 257-262 (1989).
11. C. J. Borkowski and M. K. Kopp. Rev. Sci. Instrum. 46, 951-962 (1975).
12. F. J. Lynch. IEEE Trans. Nucl. Sci. NS-27, 327-328 (1980).
13. G. P. Felcher, R. O. Hilleke, R. K. Crawford, J. Haumann, R. Kleb, and G. Ostrowski. Rev. Sci. Instrum. 58, 609-619 (1987).
14. R. A. Schrack. Nucl. Instr. and Meth. 222, 499-506 (1984).
15. R. K. Crawford, D. L. Price, J. R. Haumann, R. Kleb, D. G. Montague, J. M. Carpenter, S. Susman, S., and R. J. Dejus. Advanced Neutron Sources 1988, Proceedings of the 10th Meeting of the International Collaboration on Advanced Neutron Sources (ICANS X). Institute of Physics Conference Series Number 97, IOP Publishing Ltd, New York. pp 427-450 (1989).
16. R. K. Crawford, J. M. Carpenter, R. Dejus, J. R. Haumann, R. Kleb, D. G. Montague, D. L. Price, and S. Susman. "Status of the New GLAD Instrument at IPNS", these proceedings.
17. R. Berliner, D. F. R. Mildner, O. A. Pringle, and J. S. King. Nucl. Instr. and Meth. 185, 481-495 (1981).
18. Y. Ishikawa, M. Furusaka, N. Niimura, M. Arai, and K. Hasegawa. J. Appl. Cryst. 19, 229-242 (1986).
19. R. K. Crawford and J. R. Haumann. Nucl. Instr. and Meth. A292, 657-670 (1990).

END

DATE FILMED

02 / 06 / 91