2

CONF-791126--1

GA-A15662

AN AVAILABILITY ANALYSIS OF AN HTGR FUEL RECYCLE FACILITY - SUMMARY REPORT

by
J. N. SHARMAHD

MASTER

NOVEMBER 1979

GENERAL ATOMIC COMPANY

DISTRIBUTION OF THIS DOCUMENT IS UNLIMITED

DISCLAIMER

This report was prepared as an account of work sponsored by an agency of the United States Government. Neither the United States Government nor any agency Thereof, nor any of their employees, makes any warranty, express or implied, or assumes any legal liability or responsibility for the accuracy, completeness, or usefulness of any information, apparatus, product, or process disclosed, or represents that its use would not infringe privately owned rights. Reference herein to any specific commercial product, process, or service by trade name, trademark, manufacturer, or otherwise does not necessarily constitute or imply its endorsement, recommendation, or favoring by the United States Government or any agency thereof. The views and opinions of authors expressed herein do not necessarily state or reflect those of the United States Government or any agency thereof.

DISCLAIMER

Portions of this document may be illegible in electronic image products. Images are produced from the best available original document.

NOTICE

This report was prepared as an account of work sponsored by the United States Government. Neither the United States nor the United States Department of Energy, nor any of their employees, nor any of their contractors, subcontractors, or their employees, makes any warranty, express or implied, or assumes any legal liability or responsibility for the accuracy, completeness or usefulness of any information, apparatus, product or process disclosed, or represents that its use would not infringe privately owned rights.

GA-A15662

DISCLAIMER

This book was prepared as an account of work sponsored by an agency of the United States Government. Neither the United States Government nor any agency thereof, nor any of their employees, makes any warranty, express or implied, or assumes any legal liability or responsibility for the accuracy, completeness, or usefulness of any information, apparatus, product, or process disclosed, or represents that its use would not infringe privately owned rights. Reference herein to any specific commercial product, process, or service by trade name, trademark, manufacturer, or otherwise, does not necessarily constitute or imply its endorsement, recommendation, or favoring by the United States Government or any agency thereof. The views and opinions of authors expressed herein do not necessarily state or reflect those of the United States Government or any agency thereof.

AN AVAILABILITY ANALYSIS OF AN HTGR FUEL RECYCLE FACILITY - SUMMARY REPORT

by

J. N. SHARMAHD

This is a preprint of a paper to be presented at the 26th Annual Western Regional Conference of ASQC, November 1-3, 1979, San Diego, California.

MASTER

Work supported by
Department of Energy
Contract DE-AT03-76SF71053

GENERAL ATOMIC PROJECT 3261
NOVEMBER 1979

GENERAL ATOMIC COMPANY

DISTRIBUTION OF THIS DOCUMENT IS UNLIMITED

THIS PAGE

WAS INTENTIONALLY

LEFT BLANK

CONTENTS

1. INTRODUCTION 1
2. OBJECTIVES OF STUDY 3
3. REPROCESSING DESCRIPTION 4
4. DISCUSSION 7
5. CONCLUSIONS 12
REFERENCES 21

FIGURES

1. Simplified TRISO-BISO reprocessing flow diagram 2
2. HTGR fuel reprocessing plan, functional flow diagram 5
3. Evolution of availability analysis 8
4. Components of system capability 10
5. Dry and wet head-end reprocessing systems 13

TABLES

1. Failure mode analysis and corrective maintenance, condenser assembly 14
2. Maintainability network diagram 15
3. Unscheduled down time summary 16
4. Reprocessing head-end preventive maintenance summary 17
5. Operating cycle assumptions 19
6. Illustrative availability calculations 20

1. INTRODUCTION

Development of engineering-scale systems for a large-scale demonstration of the fuel recycle facility is currently underway at General Atomic Company and is sponsored by the Department of Energy. Figure 1 shows a simplified diagram of the reprocessing flow diagram. In November 1978, an availability analysis of reprocessing systems in a high-temperature gas-cooled reactor (HTGR) fuel recycle facility was completed. This report summarizes work done to date to define and determine reprocessing system availability for a previously planned HTGR recycle reference facility (HRRF). Schedules and procedures for further work during reprocessing development and for HRRF design and construction are proposed in this report.

The proposed work will increase the probability that the HRRF will meet its planned production capability.

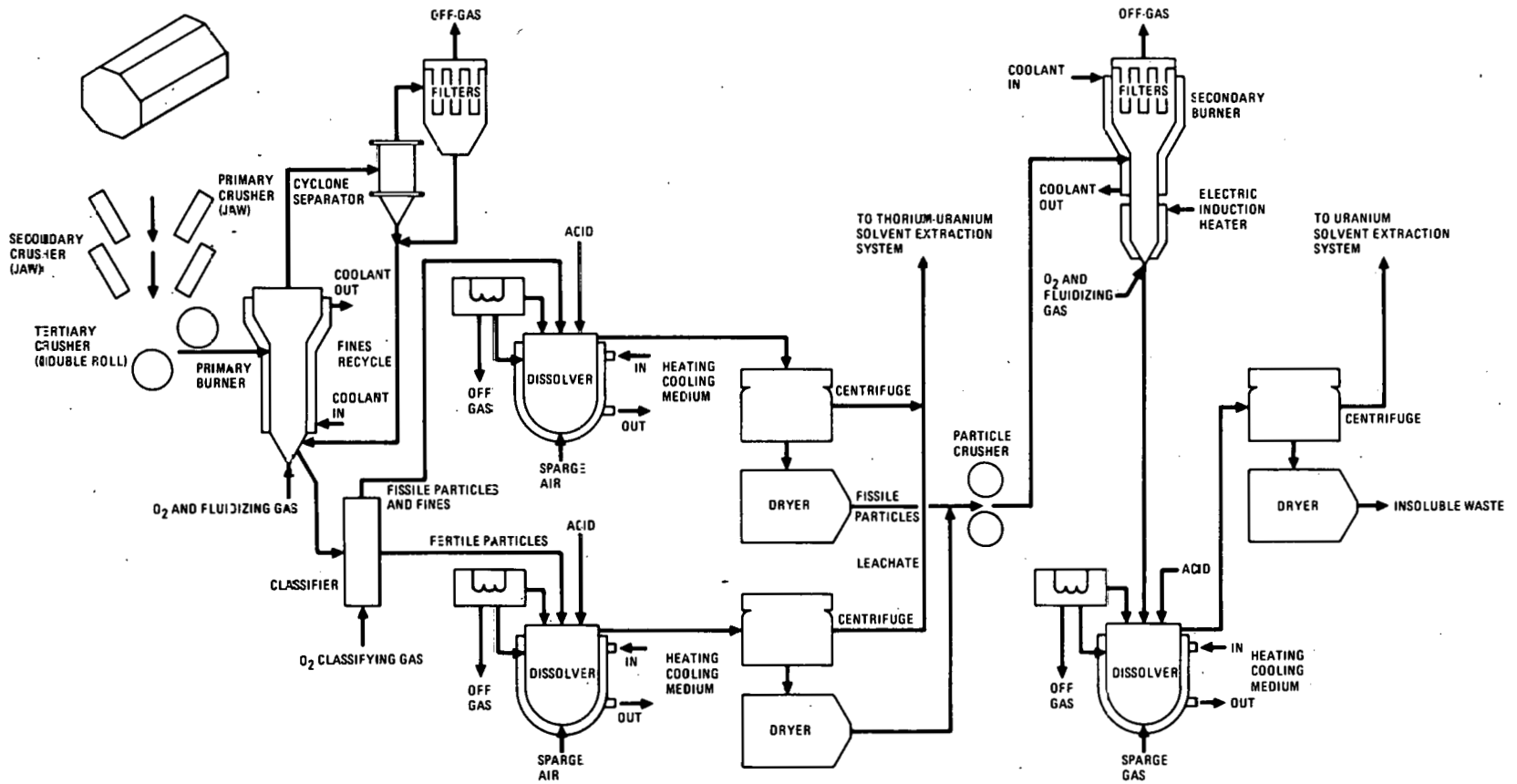

Fig. 1. Simplified TRISO-BISO reprocessing flow diagram

2. OBJECTIVES OF THE STUDY

The purposes of the study are to (1) evaluate the effectiveness of an availability assessment program in systematically identifying areas which contribute to the unavailability of new and uniquely designed (first-of-a-kind) components and systems, (2) provide procedures for pilot plant data collection, (3) provide definitions for nuclear fuel reprocessing systems that will be extended to include plant efficiency as data become available, (4) provide methodology and procedures for the construction of quantitative plant availability modeling and maintainability network diagrams, (5) determine total plant down time due to scheduled and unscheduled maintenance, (6) develop and maintain the reliability critical items list, and (7) recommend plant configuration changes to enhance availability.

3. REPROCESSING DESCRIPTION

The reprocessing operations consist of receiving and storing spent fuel shipped from the reactors, reprocessing the fuel to recover fissile values, storing the products for subsequent shipping to a refabrication plant, processing effluents and wastes to restrict radioactive release to the environment and to prepare solid waste forms suitable for disposal.

Basic plant operations are summarized in Fig. 2. The spent fuel is received in containers transported inside heavily shielded rail or truck shipping casks and is transferred to water-cooled storage wells in the spent fuel storage facility. The total decay time prior to reprocessing (nominally 180 days) permits essentially complete decay of the Pa-233 to U-233.

The fuel reprocessing sequence starts with the head-end operation, where the fuel particles are separated from the graphite block by crushing and fluidized bed burning. Subsequent head-end operations separate the fissile particles containing the residual uranium from the thorium fertile particles containing bred U-233 and convert the oxycarbide fissile kernel to an oxide suitable for dissolution. The burned-back BISO fertile particles can be dissolved after the initial crushed fuel element burning operation. The burned-back TRISO particles contain an inert silicon carbide coating, which must be crushed, and inner carbon coatings, which must be burned prior to dissolution. Head-end reprocessing for HTGR fuel is thus characterized as a crush-burn-leach process as differentiated from the chop-leach process used for conventional metal-clad fuels.

Solvent extraction processes are used for the decontamination and purification of the U-233 and U-235 products. The acid-thorex process is used to separate U-233 from throium, plutonium, and fission products

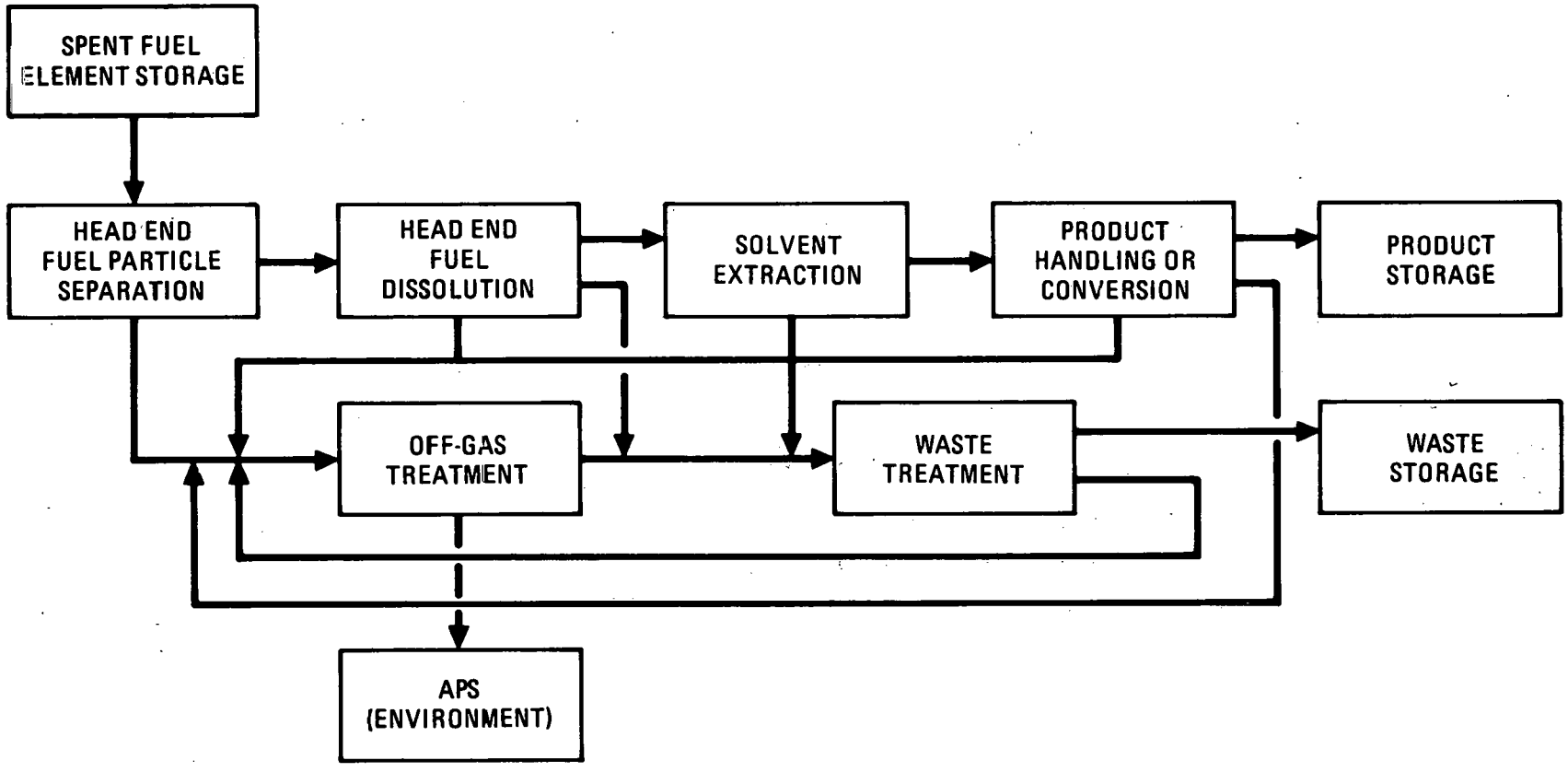

Fig. 2. HTGR fuel reprocessing plan, functional flow diagram

contained in the fertile dissolver solution. A modified purex process is used to separate U-235 from plutonium and fission products contained in the fissile dissolver solution. The uranyl nitrate product solutions are converted to oxide powder for temporary storage and subsequent shipping to a refabrication plant. The thorium nitrate byproduct solution is converted to the oxide for long-term storage (15 to 20 years) to allow the Th-228 radioactive daughters to decay prior to recycle in a fresh fuel fabrication plant.

Process off-gases are treated by a variety of methods to minimize release of radioactivity and noxious chemicals. High-level liquid wastes are temporarily stored and then solidified by vitrification for eventual disposal in a geologic repository. Appropriate methods are used to treat, compact, and package other combustible and noncombustible wastes for disposal. A simplified TRISO-BISO reprocessing flow diagram is shown in Fig. 1.

4. DISCUSSION

Optimization of the design of a typical HTGR fuel reprocessing plant requires an assessment of plant availability or the fraction of the scheduled operating time that the plant is actually in service and meeting specifications. Such an assessment, in turn, requires the determination of failure frequencies and equipment repair times.

It is the purpose of this report to provide such information; specifically, the relative failure rates are estimated, and the maintainability of large-scale HTGR fuel reprocessing equipment is predicted and analyzed as a rational basis for evaluating the design and philosophy of maintenance for HRRF. The performance of the General Atomic cold (non-radioactive) pilot plant equipment is used as a basis for these predictions.

The final allocation of system availabilities for the HRRF will, of course, be the result of an iterative process. This process initially will use the results of this preliminary maintainability analysis to calculate an overall plant availability and a process time distribution of the several plant systems. These results, in turn, will help to identify areas of the plant design, which because of their impact on plant availability, require redesign to reduce failure rates or to improve maintainability. Subsequently, a second maintainability analysis will be carried out, based on an upgraded equipment and/or system design. This process is repeated until a final optimization of plant availability based on minimum costs is compatible with the corresponding maintainability analysis. This iterative process is shown in Fig. 3.

In a standard processing or manufacturing plant, the effects of system unavailability can be offset by including redundant or diverse systems in the plant design to continue operation when the primary system

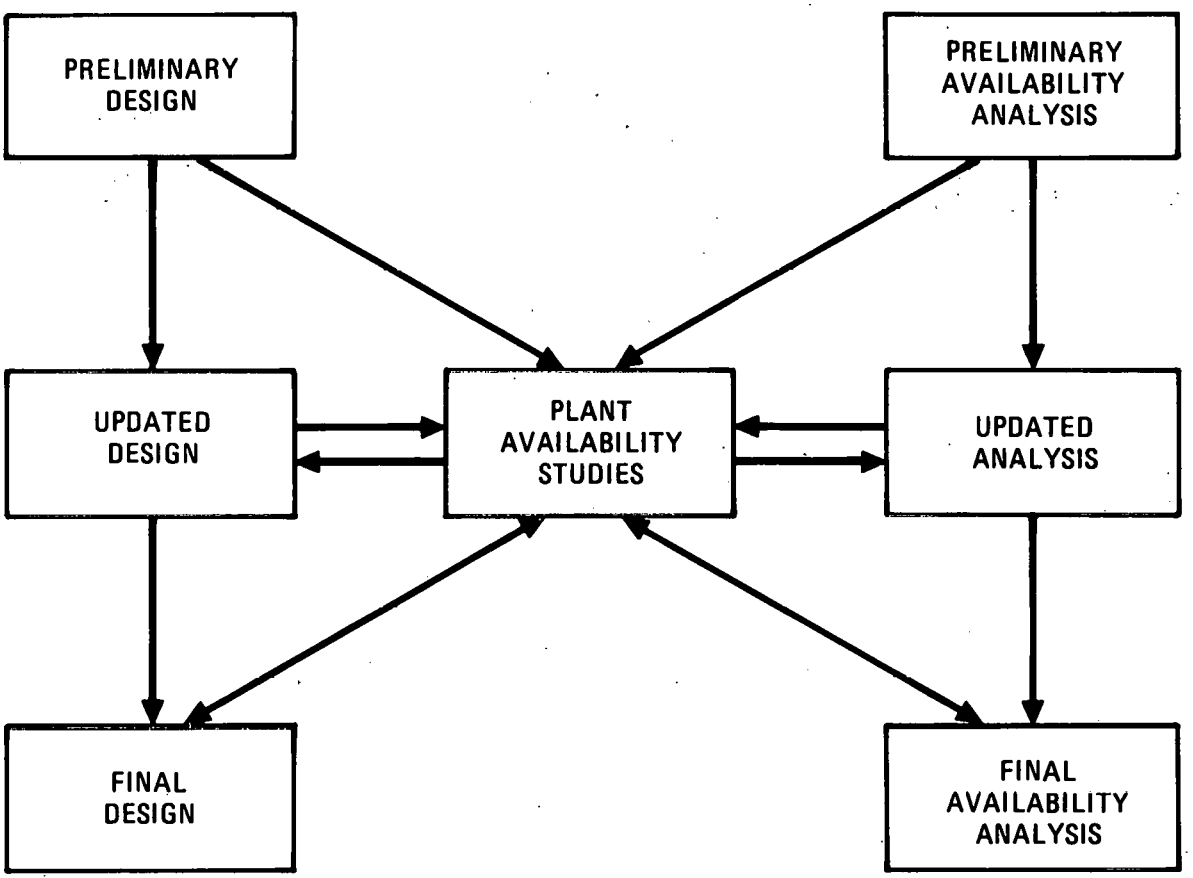

Fig. 3. Evolution of availability analysis

fails. Both feed and product material can also be stored between process steps, so that when a system is unavailable, it will not stop the operation of neighboring systems. Three major differences from a standard plant must be considered in the design of a nuclear fuel reprocessing plant:

1. Hot cell space is expensive to build and expensive to operate; therefore, space for redundant equipment and surge storage should be limited.

2. The equipment itself is expensive because of stringent quality assurance requirements and special design for remote operation; therefore, the number of pieces of equipment should be limited.

3. In addition to maintenance down time, process interruptions or delays can occur due to stringent quality control measurement requirements on the product and special nuclear material accountability requirements.

The design and development problem for spent fuel reprocessing is to minimize equipment redundancy and surge storage as much as possible without jeopardizing the efficient operation of the plant. The program proposed in this report should help determine the optimum quantity of equipment and surge storage for maximum system capability in the HRRF.

Figure 4 shows the major components of system effectiveness, where system capability is defined as actual production measured against cost and time. Availability is a major element of system effectiveness for any processing or manufacturing plant, since system unavailability reduces product output. The design goal for the HRRF is to reprocess 20,000 spent fuel elements per year. The unit cost of processing spent fuel is based on meeting this goal with the given plant design. If the goal of reprocessing 20,000 fuel elements per year is not met, the unit cost will increase, and the refabrication unit cost will also increase, since the refabrication plant cannot produce at capacity without the raw materials

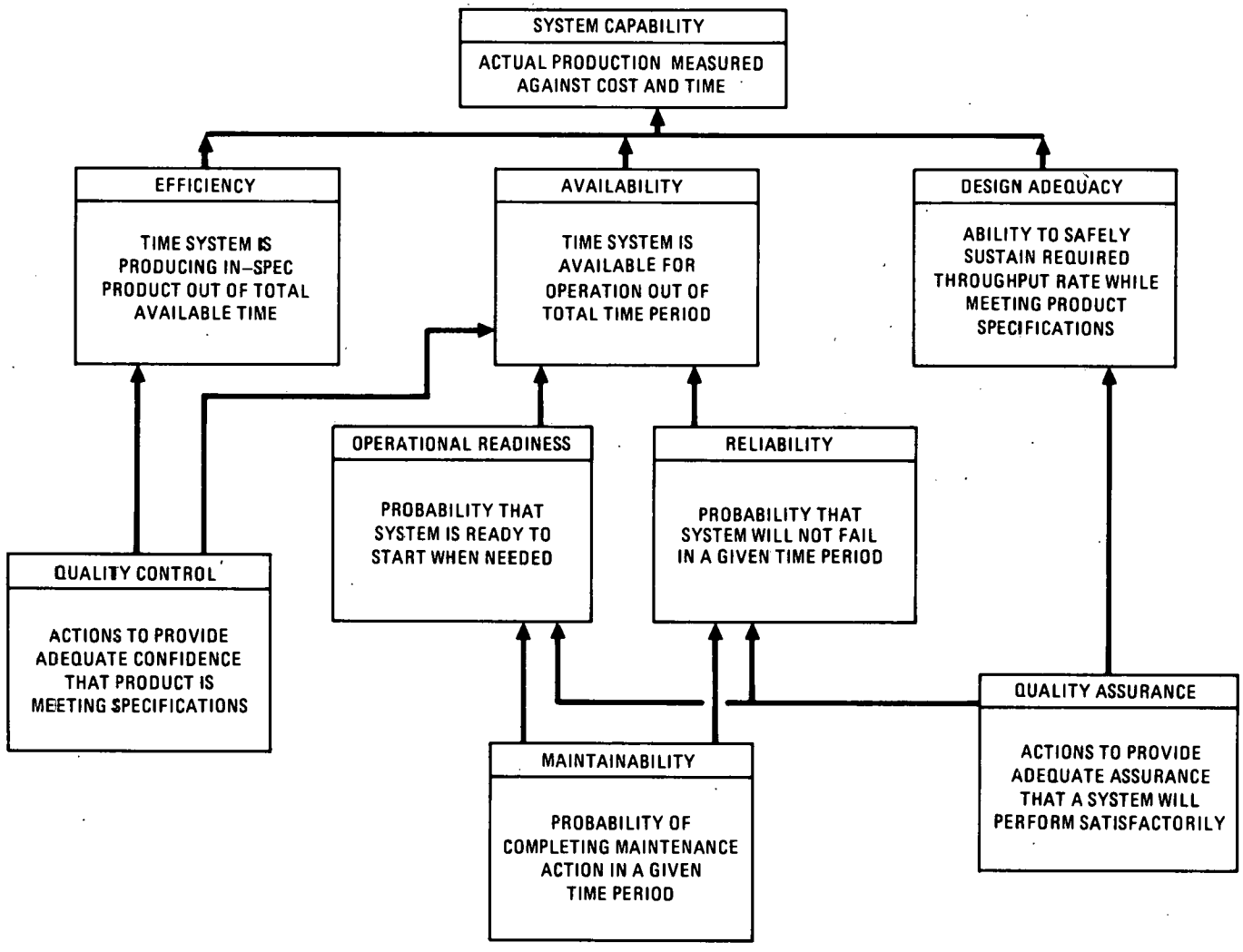

Fig. 4. Components of system capability

from reprocessing. In addition, there is some level of system effectiveness below which the plant cannot operate economically at all. It is important, therefore, to take steps to make sure that system availability is correctly calculated and systems properly designed for the desired availability before the HRRF is constructed. Since system effectiveness is the desired end result, the discussion of availability in this report also suggests ways of extending definitions and calculations to include efficiency.

5. ANALYSIS AND CONCLUSIONS

Due to the lack of operating experience, engineering judgment was employed to estimate probable failure rates, transfer times, and repair times for major system components. These estimates can then be used to (1) determine whether the plant can produce at a satisfactory rate under these conditions, (2) determine what adjustments are necessary in the estimates to produce satisfactory operating conditions, and (3) determine which system components have the greatest effect in reducing plant availability. These estimates can guide the design engineers in equipment development, and sensitive system components can be identified for special design attention or reliability testing. The though processes used in producing the estimates are valuable in making design engineers reliability conscious. Such judgmental estimates have already been made for the dry and wet head-end systems shown in Fig. 5.

The statistical parameters that define failure rates and mean time to repair were developed for each system. An example of failure rate and distribution parameters for the condenser assembly are shown in Table 1. A maintainability diagram and parameters for each step of maintenance action are presented in Table 2.

The estimated failure rates and replacement times result in the unscheduled down times by system shown in Table 3. These results are for intersystem comparison only and represent the consideration of only major failure mechanisms.

Preventive maintenance estimates have also been made and are summarized in Table 4. Estimates for administrative time and accountability and quality control hold time are currently not available. A remote maintenance plan under development for HRRF should result in a basis for

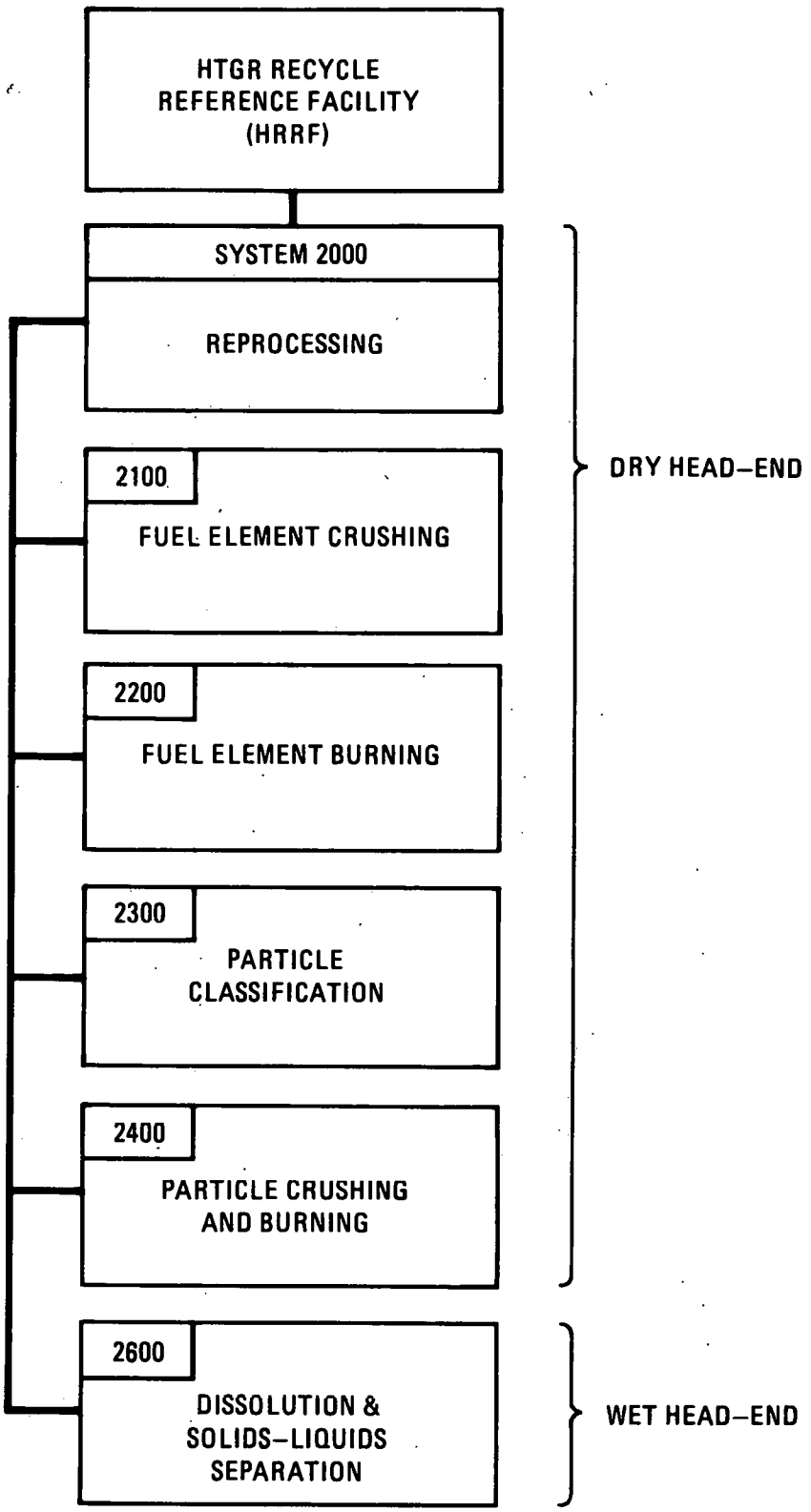

Fig. 5. Dry and wet head-end reprocessing systems

TABLE 1
FAILURE MODE ANALYSIS AND CORRECTIVE MAINTENANCE, CONDENSER ASSEMBLY

Failure Mode	Failure Mechanism	Lognormal Distribution Parameters for Failure Rate (Per Operating Year)				Statistical Moments			Corrective Maintenance
		5th Percentile $\lambda 0.05$	Median $\lambda 0.50$	95th Percentile $\lambda 0.95$	Uncertainty Factor f	Mean E (λ)	Variance Var (λ)	Standard Deviation SD (λ)	
Condenser leaks	Weld cracks	0.07	0.32	1.39	4.38	0.47	0.28	0.53	Reweld condenser
	Corrosion	0.18	0.32	0.57	1.80	0.34	0.02	0.12	Replace condenser
	Overpressurization	Neg	Neg	Neg	Neg	Neg	Neg	Neg	Replace condenser
Loss of cooling water	Valve fails	0.07	0.45	3.06	6.83	0.89	2.28	1.51	Replace valve
	Pipe breaks	0.07	0.32	1.39	4.38	0.47	0.28	0.53	Repair pipe

TABLE 2
MAINTANABILITY NETWORK DIAGRAM

Equipment: Condenser			Maintenance Requirement: Repair Vessel (Weld)		
Issue	Date	By	Description	Rev	Appr.
A	2/6/78	STULA	Estimate Lognormal Distributions		YIP
B	5/19/78	SHARMAND	Calculate Statistical Parameters		

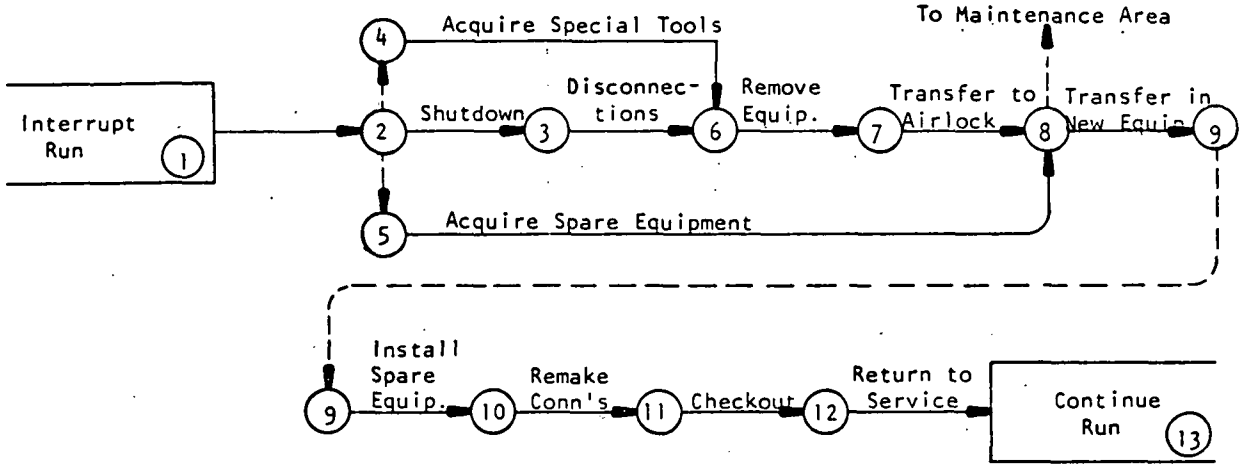

Step	Lognormal Parameters for Step Execution Time (Time, Minutes)				Statistical Moments	
	5th Percentile $\tau_{0.05}$	Median $\tau_{0.50}$	95th Percentile $\tau_{0.95}$	Uncertainty Factor f	Mean $E(\tau)$	Variance $Var(\tau)$
1-2	60	120.0	240	2.0	131.0	3,340.0
2-3	60	104.0	180	1.73	110.0	1,420.0
3-6	0	0	0	0	0	0
4-6	30	60.0	120	2.0	65.6	835.0
6-7	20	34.6	60	1.73	36.6	158.0
7-8	0	0	0	0	0	0
5-8	0	0	0	0	0	0
8-9	0	0	0	0	0	0
9-10	30	73.5	180	2.45	85.2	2,510.0
10-11	0	0	0	0	0	0
11-12	30	60.0	120	2.0	65.6	835.0
12-13	120	170.0	240	1.41	174.0	1,370.0
				SUM	602.0	9,630.0

Component repair time distribution:

	Min	H
Mean	602.0	10.0
Variance	9,630.0	2.68
SD	98.2	1.64
5th Percentile	441.0	7.35
95th Percentile	763.0	12.7

TABLE 3
UNSCHEDULED DOWN TIME SUMMARY

System	Down Time (h/yr)
Fuel element size reduction	480
Fuel element burning	276
Particle classification	10
Particle crushing and burning	143
Dissolution and liquid-solids separation	370
Solids handling	55
Head end total	1334

TABLE 4
REPROCESSING HEAD-END PREVENTIVE MAINTENANCE SUMMARY[a]

System	No. of Activities	Frequency (times/yr)	Duration (h/yr)
Fuel element size reduction	12	12	204
	2	1	42
Solids handling	4	12	46
Subtotal			292
Fuel element burning	8	4	88
	2	2	4
Solids handling	4	12	46
	2	2	62
Subtotal			200
Particle classification	3	2	48
Solids handling	4	12	46
Subtotal			94
Particle crushing and burning	2	20	100
	1	4	4
	2	2	4
Solids handling	4	12	46
Subtotal			154
Dissolver and liquid/solids separation	4	1	12
	5	2	38
	1	4	1
	2	12	15
Subtotal			66
Total planned maintenance			806

[a] Refs. 2 and 3.

estimating the availability of maintenance equipment, repair crews, and spare parts. The calculations in this report assume that repair crews, decisions, maintenance equipment, and spares are available. Accountability down time for this report is limited to known plant shutdowns for semi-annual accountability and to down time for cleanout of equipment at the end of each customer batch.

Based on the preventive maintenance estimates and the partial accountability down time assumptions, a planned operating time for each system has been calculated and is shown in Table 5.

Two illustrative availability calculations can be made using the information from Tables 3 and 5. These are (1) operational availability and (2) availability during operating cycle. These values are shown in Table 6.

TABLE 5
OPERATING CYCLE ASSUMPTIONS

System	Period Hours[a] (h/yr)	Planned Plant Operating Time[b] (h/yr)	Scheduled Down Time (h/yr)			Planned Operating Cycle[e] (h/yr)
			Customer Accountability Cleanout[c]	Scheduled Maintenance[d]	Quality Control Release Time	
Fuel element size reduction	8760	8040	912	292	(f)	<6836
Fuel element burning	8760	8040	912	200	(f)	<6928
Particle classification	8760	8040	912	94	(f)	<7034
Particle crushing and burning	8760	8040	912	154	(f)	<6974
Dissolution liquid-solids separation	8760	8040	912	66	(f)	<7062

[a] Total hours per calendar year.

[b] Period hours (total hours per calendar year) minus plant scheduled down time equals planned plant operating time; i.e., 8760 - 720 = 8040.

[c] Assumes 20,000 fuel elements per year, 19 customers equally divided between 878 MW(e) and 1330 MW(e) plants, two types of fuel per segment, or 38 cleanouts per year.

[d] Refs. 2 and 3.

[e] Planned plant operating time minus system scheduled down time equals planned operating cycle; i.e., 8040 - [912 + 292 + (f)] = <6836.

[f] To be determined.

TABLE 6
ILLUSTRATIVE AVAILABILITY CALCULATIONS

Time Availability	System				
	Fuel Element Size Reduction	Fuel Element Burning	Particle Classification	Particle Crushing and Burning	Dissolution and Liquid-Solids Separation
Period hours (h/yr)	8760	8760	8760	8760	8760
Planned operating cycle[a]	<6836	<6928	<7034	<6974	<7062
Unscheduled down time[b]	491	287	21	154	381
Available hours[c]	<6345	<6641	<7013	<6820	<6681
Operational availability[d]	0.72	0.76	0.80	0.78	0.76
Availability during operating cycle[e]	0.93	0.96	0.98	0.98	0.95

[a] See Table 5.

[b] Table 3-1, Ref. 1 results plus solids handling down time.

[c] Planned operating cycle minus unscheduled down time equals available hours; i.e., <6836 - 491 = <6345; or planned plant operating time minus scheduled plus unscheduled down time equals available hours; i.e., 8040 - {[912 + 292 + (f)]} = <6345.

[d] (Available hours/period hours) = operational availability.

[e] (Available hours/operating cycle) = availability during operating cycle.

REFERENCES

1. Holder, N. D., J. N. Sharmahd, and J. S. Rode, "Availability of Reprocessing Systems in an HTGR Fuel Recycle Facility," DOE Report GA-A15028, General Atomic Company, November 1978.
2. Rode, J. S., and J. B. Strand, "A Preliminary Analysis of HTGR Dry Head-End Reprocessing Systems," DOE Report GA-A14678, General Atomic Company, November 1977.
3. Stula, R., and H. Yip, "Dissolver-Centrifuge System Maintainability Data," General Atomic unpublished data, February 6, 1978.

GENERAL ATOMIC

GENERAL ATOMIC COMPANY
P. O. BOX 81608
SAN DIEGO, CALIFORNIA 92138