CONF-850801--28

SAND85-0849C

SAND--85-0849C

DE85 010124

DEVELOPMENT OF SEALS FOR A GEOTHERMAL DOWNHOLE INTENSIFIER -- A PROGRESS REPORT*

Khushroo M. Captain(1) Andrew C. Harvey(1) Billy C. Caskey(2)

(1) Foster-Miller, Inc., Waltham, Massachusetts, USA
(2) Sandia National Laboratories, Albuquerque, New Mexico, USA

ABSTRACT

A system using high-velocity fluid jets in conjunction with a rotary diamond bit is currently considered as the best candidate for reducing the cost of drilling geothermal wells. Technical, safety and cost considerations indicate that the required jet supply pressure can best be established by a downhole pressure intensifier. Key intensifier components are the check valve and plunger seals, which must prevent leakage of the high-pressure, high-temperature abrasive fluid (drilling mud). To achieve the required performance, novel ceramic seals are currently being developed. The check valve seal includes a tapered polymeric plug and ceramic stop acting against a ceramic seat. The ceramic plunger seal is a variant of the "stepped-joint" piston ring and is designed to minimize contact pressure and abrasive wear. Initial testing of these seals in the laboratory shows encouraging results; design refinement and further testing is in progress.

INTRODUCTION

Sandia National Laboratories manages the U.S. Department of Energy's Geothermal Technology Development Program. A goal of the program is to expand the use of geothermal energy by developing technologies that reduce the cost of drilling and completing geothermal wells. An effort is currently underway to develop an advanced drilling system whose aim is to reduce drilling costs by 25 percent. This system has as its cutting element a special rotary diamond bit supplemented by high-velocity cavitating fluid jets (Glowka, 1985). Pressurized fluid (drilling mud) is supplied to nozzles in the bit, and the jets from these nozzles help break the rock, cool the diamond cutters, and clear debris from the hole bottom.

An initial study (McDonald, et al., 1981) addressed the technical and economic feasibility of developing the high-pressure drilling fluid supply system. A system using high-pressure surface equipment was judged to be unattractive due to the large number of components needing development, the hazards to operating personnel, and the high operating cost. It was concluded that a system using low-pressure surface equipment with a downhole pressure intensifier had the greatest potential for success. As part of the component development effort, Sandia National Laboratories awarded a contract to Foster-Miller, Inc. to design and test two key elements of the downhole intensifier, namely, the seals for the check valve and reciprocating plunger.

DESIGN CONCEPT

A summary of the seal requirements is shown in Table 1. Several of these requirements are both unusual and severe because the downhole intensifier operates at high temperature with an abrasive fluid. To minimize the likelihood of failure, key seal elements are made from hard refractory materials that are unaffected by the temperature and are much harder than the abrasive particles (quartz) in the fluid. These materials also have very high resistance to cyclic and contact (hertzian) stresses -- both very desirable characteristics for dynamic seals.

Table 1. Seal Specifications.

		Check Valve	Plunger
1.	Minimum Survival Time	200 hr	200 hr
2.	Maximum Temperature		
	Operation	300°F	300°F
	Soak	500°F	500°F
3.	Fluid Characteristics		
	Type	Water-based drilling mud with abrasive (quartz) particles	
	Abrasive Content (by vol.)	3%	3%
	Particle Size	<74μ	<74μ
4.	Maximum Pressure	15,000 psi	15,000 psi
5.	Cycle Rate	1 Hz	1 Hz
6.	Flow Resistance	<100 psi at 4 gpm	N/A
7.	Diameter; Stroke	N/A	1 in.; 24 in.
8.	Maximum Leakage	0.1 gpm	0.1 gpm

*Work performed under the auspices of U.S. Department of Energy Contract DE-AC04-76DP00789.

MASTER

DISTRIBUTION OF THIS DOCUMENT IS UNLIMITED

DISCLAIMER

This report was prepared as an account of work sponsored by an agency of the United States Government. Neither the United States Government nor any agency Thereof, nor any of their employees, makes any warranty, express or implied, or assumes any legal liability or responsibility for the accuracy, completeness, or usefulness of any information, apparatus, product, or process disclosed, or represents that its use would not infringe privately owned rights. Reference herein to any specific commercial product, process, or service by trade name, trademark, manufacturer, or otherwise does not necessarily constitute or imply its endorsement, recommendation, or favoring by the United States Government or any agency thereof. The views and opinions of authors expressed herein do not necessarily state or reflect those of the United States Government or any agency thereof.

DISCLAIMER

Portions of this document may be illegible in electronic image products. Images are produced from the best available original document.

DISCLAIMER

This report was prepared as an account of work sponsored by an agency of the United States Government. Neither the United States Government nor any agency thereof, nor any of their employees, makes any warranty, express or implied, or assumes any legal liability or responsibility for the accuracy, completeness, or usefulness of any information, apparatus, product, or process disclosed, or represents that its use would not infringe privately owned rights. Reference herein to any specific commercial product, process, or service by trade name, trademark, manufacturer, or otherwise does not necessarily constitute or imply its endorsement, recommendation, or favoring by the United States Government or any agency thereof. The views and opinions of authors expressed herein do not necessarily state or reflect those of the United States Government or any agency thereof.

The approach to designing the check valve seal is to have a hard ceramic element serve as a stop against a hard ceramic seat, and to provide a soft material (such as a high temperature polymer) to plug any leakage paths that would be formed between the stop and seat due to surface roughness and/or trapped particles. For the plunger seal, the approach is to develop a hard-seal configuration that maintains uniform contact at a low controlled pressure over the entire sealing periphery. Further details of the seal concepts are given below.

The Check Valve Seal

In a conventional metal-seal check valve, any grit in the fluid is usually trapped between the sealing surfaces of the valve as it closes. Trapped particles lead to imperfect closure which causes leakage; they also lead to pitting (due to high contact stress) and erosion (due to abrasive leakage flow) which ultimately results in failure of the seal material. In instances where grit is present, an elastomer is often used as one of the sealing elements, so that a particle is enveloped in the elastomer rather than holding the sealing elements apart. At high pressure and temperature, however, a traditional elastomeric seal without a backup member is unsuitable because the elastomer tends to extrude through the opening to be sealed. The inclusion of a hard stop which forms an extrusion dam can overcome this difficulty. A check valve seal configuration based on this approach is shown in Figure 1.

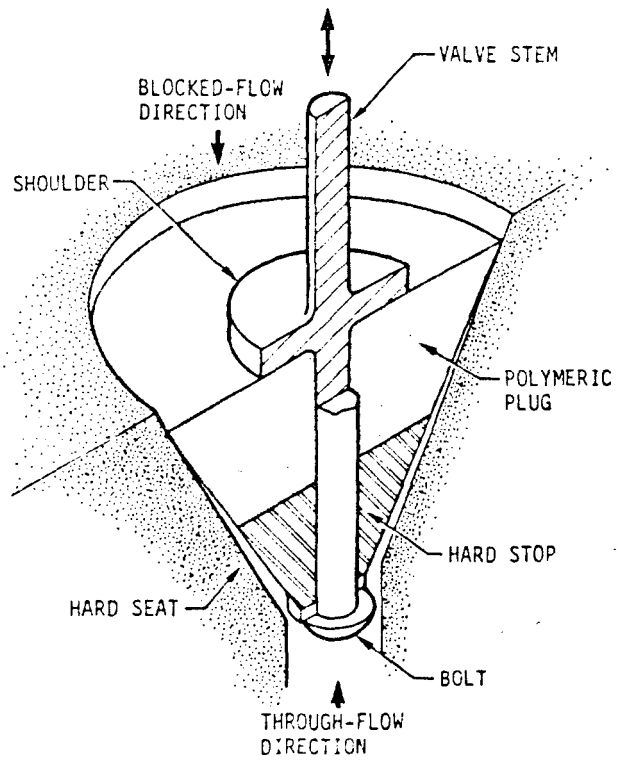

Figure 1. Check valve seal configuration.

The valve seal consists of two key elements:

- A metal valve stem which holds a tapered polymeric plug and hard ceramic stop
- A hard ceramic seat that can mate with the plug and stop

The plug has a slightly steeper taper than the seat. Therefore, as the valve beings to close, the upper part of the plug first touches the seat. As pressure builds up, the plug is compressed to bring the lower part into contact with the seat. Shortly thereafter, the hard stop contacts the seat and serves as a barrier to prevent extrusion of the plug material into the low-pressure zone.

Any abrasive particles in the contact zone of the plug will be enveloped in the polymer and thus should not prevent formation of a tight seal. Abrasive particles trapped between the stop and seat will be crushed due to the high pressure force compressing these members during blocked-flow operation. The available extrusion gap will thus be small, and polymer extrusion can be prevented by choosing a suitable plug size and material.

The Plunger Seal

The configuration of the plunger seal is shown in Figure 2. It represents a modified form of a "stepped-joint" piston ring. A key element is the ventilated sealing band which surrounds the plunger shaft. The band and shaft are made of hard ceramic to resist wear when sealing the abrasive mud. The band has two staggered longitudinal splits which are joined by a circumferential split as shown. Thus, the band can exert a compressive radial pressure on the shaft, depending on the pressure applied to its outer surface. A pair of circumferential ventilating grooves are formed on the inner surface of the sealing band, spaced symmetrically on either side of the circumferential split. A static seal (made of a high-temperature polymer)

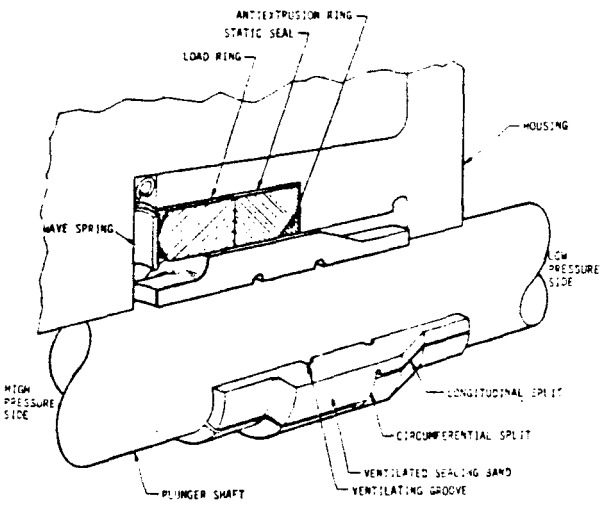

Figure 2. Plunger seal configuration.

is installed between the housing and the outer surface of the sealing band. The circumferential split in the sealing band is covered by the static seal. An antiextrusion ring is placed between the static seal and the housing to prevent the former from extruding into the low pressure area. A load ring and wave spring are also provided to preload the static seal.

A characteristic of this type of seal is that there is no "daylight" gap across it. The longitudinal splits in the band are staggered; they only communicate through the circumferential split which is forced closed by the axial pressure differential across the seal. Leakage from around the outer surface is prevented by the static seal.

The radial pressure profile on the inner and outer surface of the sealing band is shown in Figure 3. High pressure is transmitted along the longitudinal split to the left ventilating circumferential groove. Thus, high pressure exists between the shaft and band up to the left groove. Similarly, low pressure is transmitted along the longitudinal split to the right ventilating groove. Thus, low pressure exists between the shaft and band up to the right groove. Between the grooves, an essentially linear decrease in pressure exists; the linear drop occurs because the clearance between the shaft and band is very small (on the order of the surface roughness), and the leakage flow is controlled by fluid viscosity and not inertia.

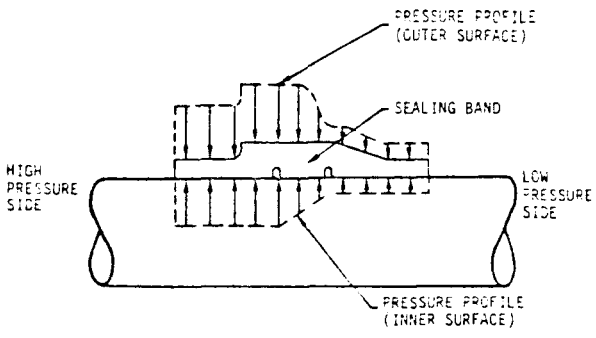

Figure 3. Radial pressure profile.

High pressure is transmitted along the outside of the sealing band up to the high pressure side (left hand side) of the static seal. Low pressure is transmitted up to the low pressure side (right hand side) of the static seal. Thus, the external pressure on the sealing band will decrease across the static seal as shown.

Comparison of the pressure profiles on the inside and outside of the sealing band shows that there is a force acting radially inward on the band, and that the magnitude of this force can be set by adjusting the ventilation (i.e., the axial distance between the ventilating grooves). This is an important conclusion, since it forms the basis for the design of the seal.

In designing the seal, the following steps are taken:

- The distance between the ventilating grooves is chosen to provide a certain level of radially-inward force.
- The total axial length of the band is chosen so that the radially-inward force acting over the (total) internal band area provides a desired (low) value of compressive pressure on the plunger shaft.

This design approach ensures that the band is always pressed (lightly) against the shaft so that no daylight gap is found between shaft and band. At the same time, by choosing a low value of bearing pressure, the friction and wear can be minimized. An important feature of the concept is that wear will not affect seal operation: the band will compensate for it automatically by closing itself around the plunger (and reducing the width of the longitudinal splits) to maintain the original contact pressure.

TEST PROTOTYPES

Test prototypes of the check valve and plunger seal were fabricated as shown in Figures 4 and 5. The key elements of the check valve are the valve stem and seat assemblies. The valve stem assembly includes the valve stem, polymeric plug, hard stop and reseat spring. The plug and stop are held in place by a bolt that restrains them against a shoulder on the stem. The seat assembly is made up of the seat and compression ring; the latter prestresses the (ceramic) seat so that it is always in compression.

Materials used in the construction of the check valve are as follows:

Polymeric plug	No. 1:	Glass-filled Teflon
	No. 2:	Silicone rubber
Hard stop:		Silicon carbide
Hard seat:		Silicon carbide

The remainder of the check valve is made of steel, with the exception of the valve stem bushing which is made of bronze.

The key elements of the plunger seal (Figure 5) include the ventilated sealing band and plunger shaft. To simplify prototype fabrication, the band is made with an inner sleeve contained within an outer housing. The sleeve material (Ferrotic®) is composed of titanium carbide particles dispersed within a steel matrix. This material, referred to generically as a cermet, combines the hardness of ceramic with the toughness and machinability of steel. It also provides superior lubricity in sliding contact. The outer housing is made of invar, whose coefficient of thermal expansion is close enough to that of the cermet to prevent excessive thermal stress in the seal. The shaft is made from hollow silicon carbide tube. The materials used for other plunger seal components are:

Static seal:	Teflon
Antiextrusion ring:	Brass

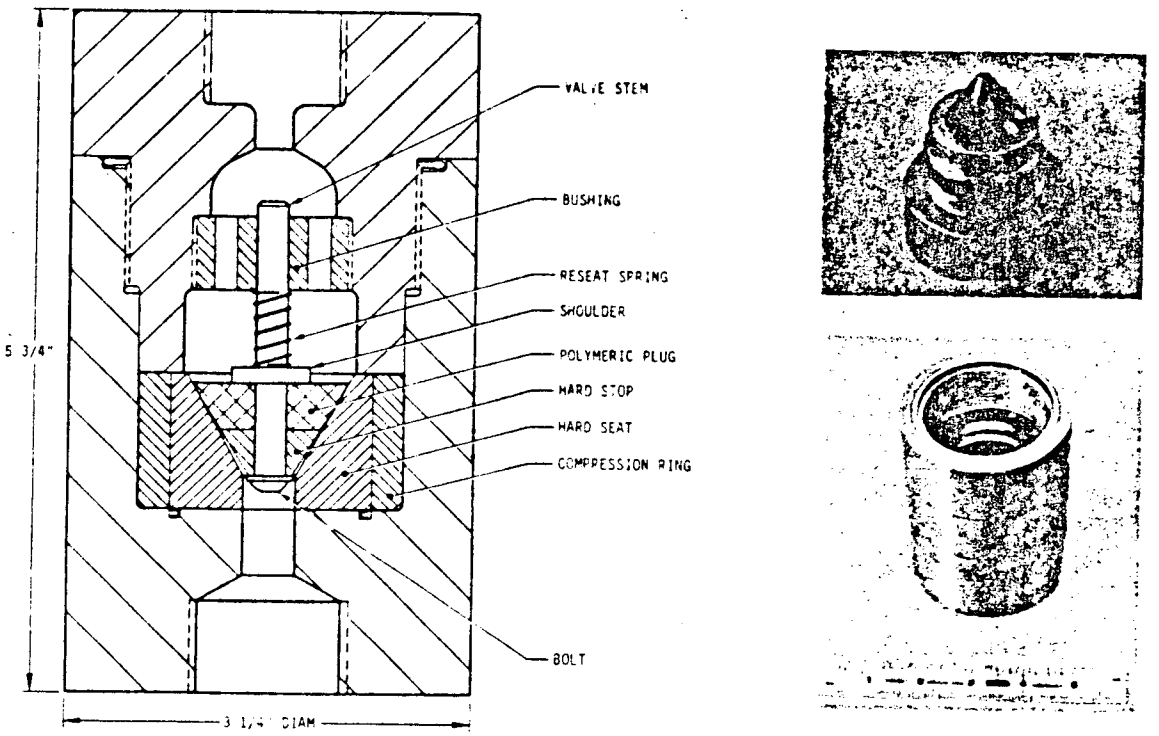

Figure 4. Prototype check valve.

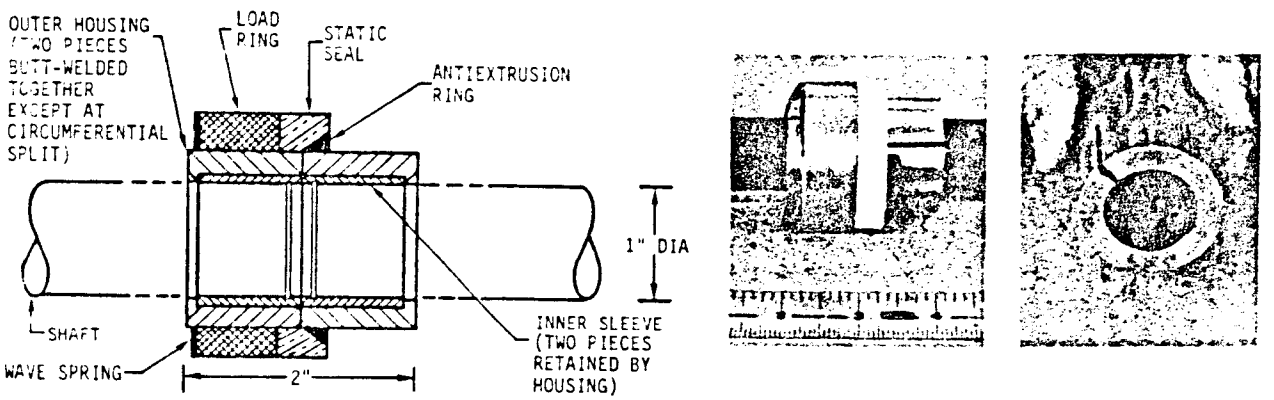

Figure 5. Prototype plunger seal.

The remainder of the plunger seal assembly is made of steel, with the exception of the load ring which is made of brass.

TEST RIG

A schematic diagram of the check valve and plunger seal test rig is shown in Figure 6. This rig subjects the seals to a duty cycle (pressure and motion history) that is very similar to that which they would experience in an actual intensifier. (The advantage of using such a rig instead of a real intensifier is that the test power requirement is lower, as explained below).

The plunger seals to be tested are installed in a compartmented seal housing which has the plunger shaft passing right through it. The plunger is sealed at four locations as shown. The two inner seals are high-pressure seals (15,000 psi), the two outer ones are low-pressure seals (100 psi). Only the inner seals are test seals. The plunger is made to move back and forth by a hydraulically-actuated stroking cyclinder. A high-pressure (15,000 psi) fluid source is switched cyclically by the bypass control servovalve (S_1) to alternately pressurize and depressurize the mud line leading to the high-pressure chamber of the seal housing. Drilling mud is supplied to the mud line from a mud reservoir maintained at 100 psi (by gas pressure). The check valve under test is placed in the line between the mud reservoir and the high-pressure chamber as shown. Thus makeup mud is admitted into the

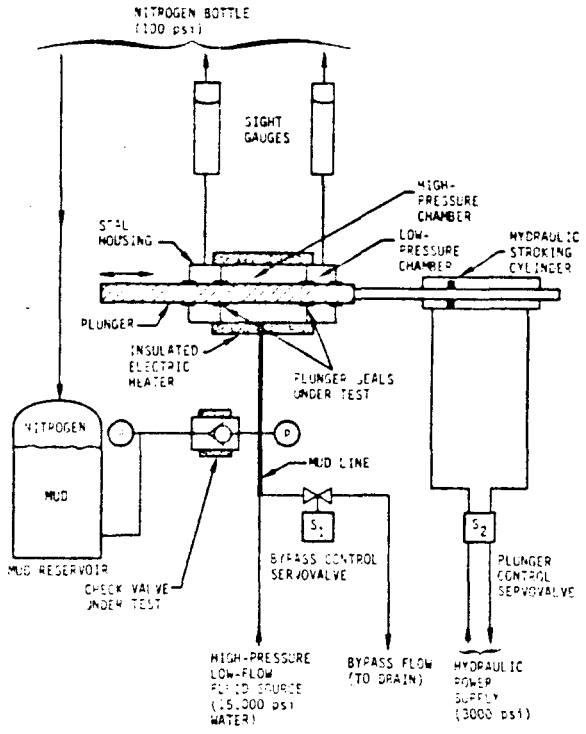

Figure 6. Schematic diagram of test rig.

mud line when it is depressurized (i.e., when the 15,000 psi source is vented), but mud is not pumped back into the reservoir when the mud line is pressurized.

In order to subject the plunger seals to the required operating temperature (300°F), thermostatically-controlled electric heaters are placed around the housing and surrounded by insulation. The low-pressure chambers of the seal housing are maintained at 100 psi (by gas pressure) to keep the hot, water-based mud from boiling. Leakage from the test seals is determined by collecting the fluid from the low-pressure chambers in two sight gauges.

Test rig operation is controlled by two slaved servovalves (S_1, and S_2). These valves:

- Actuate the stroking cylinder so that the plunger reciprocates with the necessary stroke and frequency. (Feedback from limit switches on the plunger set the stroke length).
- Switch the high-pressure fluid flow so that the mud line is pressurized cyclically to 15,000 psi.

This arrangement subjects the test seals to virtually the same differential pressure history as they would see in the downhole intensifier while the plunger is moving back and forth.

If the plunger seals were tested in a real intensifier, then substantial quantities of pressurized fluid would be produced, and the pumping power would be high (about 43 hp during the pumping stroke). With the test arrangement shown in Figure 6, there is no pumping action in the seal housing, and thus no pumping power is required to stroke the plunger. Although the test rig does have an additional source of power loss (due to bypass flow venting), this loss is significantly less than the pumping power (because the bypass flow is small). Therefore, test power requirements are significantly lower with the test rig than with a test intensifier, so that a smaller and less expensive hydraulic power supply can be used.

TEST RESULTS

Check Valve Seal

Initial test data were analyzed to determine check valve performance when pressurized with mud. The results are summarized in Table 2. The first set of tests (Table 2a) checks the pressure drop in the through-flow direction. This drop is found to be well within specifications, with a measured value of 60 psi at 10 gpm compared to the specified maximum value of

Plug Material	Average Flow (gpm)	Average ΔP (psi)	Average Temperature (°F)	Total Time (hr)	Remarks
1. Glass-filled Teflon	10	70	250 to 300	54	Wear at exposed rim of plug
2. Silicone rubber	10	60	250 to 300	110	No wear observed
(a) Continuous Through-Flow Testing					

Plug Material	Cycle Rate	Differential Pressure (psi)	Leakage Flow	Remarks
1. Glass-filled Teflon	1 Hz	~0	High	Sand particles prevented contact between plug and seat
2. Silicone rubber	1 Hz	15,000	None	Valve failure after 6 cycles; see text
(b) Cyclic Blocked-Flow Testing				

Table 2. Check valve performance.

Configuration	Differential Pressure (psi)	Leakage Flow	Plunger Motion	Remarks
1. Original clearancances: tight static seal	15,000	~0	No	Plunger locked in place; static seal too tight around sealing band
2. Larger clearances: relieved static seal	15,000	Not measured	Yes	Plunger shaft failure; see text

Table 3. Plunger seal performance.

100 psi at 4 gpm. The tests also show that the silicone rubber plug has superior wear resistance compared to the Teflon plug. The second set of tests (Table 2b) evaluates the ability of the seal to prevent flow when pressurized in the blocked-flow direction. The first test -- using the Teflon plug -- was unsuccessful because sand particles in the mud prevented the plug from making firm contact with the seat. Apparently, the plug was too hard to envelop the sand. The second test -- using the softer, silicone rubber plug -- appeared to overcome this shortcoming. However, the valve failed after only six cycles of pressurization, so its long-term performance is as yet unknown. Valve failure occurred because, under the high blocked-flow pressure force, the plug was forced around the restraining shoulder of the valve stem and moved to the other side of the shoulder. Also, the sharp outer rim of the silicon carbide stop showed signs of chipping, and a crack was found in the seat. The crack probably occurred as a result of the chipping since any (hard) chips lodging themselves between stop and seat would generate very large contact stresses during blocked-flow operation.

The valve stem and stop are currently being remade to increase the stem shoulder diameter (for improved plug restraint) and to round off the sharp rim of the stop (to prevent chipping and cracking). The test program will continue after these changes have been implemented.

Plunger Seal

Initial tests with the plunger seal are summarized in Table 3. In the first test, the seals held the full differential pressure without leakage; however, the plunger could not be moved. Examination of the system indicated that the interference fit of the external housing and static seal gave rise to excessive radial compression of the sealing band. So, static seal clearances were changed and the system was retested. Initially, as before, the seals held the full differential pressure but, this time, the plunger was free to move. Cyclic testing was thus started. Unfortunately, after the plunger had moved a few inches, the plunger shaft failed and the test had to be terminated. Examination of the shaft clearly showed that its failure was unconnected with seal operation, but had occurred because of the way in which it had been constructed. Since a long (40 in.) one-piece silicon carbide shaft was not readily available, it had been decided to fabricate this component by joining four shorter (10 in.) pieces of hollow tube. This was carried out by first sealing the joints between tubes with epoxy, and then fastening the assembly under axial compression by a bolt through the center. An imperfection in one of the epoxy joints allowed high pressure fluid to enter the inside of the shaft (tube) and cause it to fail due to excessive tensile hoop stress. An improved method of shaft fabrication is currently being implemented, and retesting of the plunger seals is scheduled to begin shortly.

CONCLUSIONS

Check valve and plunger seals for a geothermal downhole intensifier have been designed and built. The use of hard ceramic materials for key seal elements is expected to provide exceptionally good resistance to the high-pressure, high-temperature, abrasive drilling fluid used in the intensifier. Initial test results indicate that the check valve seal will be capable of meeting the pressure and flow requirements for through-flow and blocked-flow operation. The testing also indicates the need for certain design refinements to better fasten the sealing plug and to prevent chipping and cracking of the ceramic. Such refinements are currently being implemented, and testing is scheduled to continue.

Initial testing with the plunger seal has also been carried out. Although firm conclusions cannot yet be formed, the seal appears to hold the required pressure. The original method of fabricating the plunger shaft has proved unsatisfactory. A better fabrication technique is currently being implemented, and further testing will continue after a new shaft is in place.

Upon successful completion of the seal development program a major source of technical risk will have been removed, and work on the intensifier (and other parts of the drilling system) can then proceed without delay. In addition, the seals developed for the downhole intensifier will also have application in other geothermal equipment.

REFERENCES

Glowka, David A., "Design Considerations for a Hard Rock PDC Drill Bit," Geothermal Resources Council Transactions, Vol. 9., August 1985.

McDonald, Michael C., Reichman, James M., and Theimer, J. Kenneth , "Evaluation of High Pressure Drilling Fluid Supply Systems," Sandia National Laboratories Contractor Report, SAND81-7142, October 1981.