WFPS:TME-79-023
SEPTEMBER 1979
UC-20, 20D

USER'S MANUAL FOR COAST 4
A CODE FOR COSTING AND SIZING TOKAMAKS

PREPARED BY

D. A. SINK

E. M. IWINSKI

SPONSORED BY

US DEPARTMENT OF ENERGY
CONTRACT EG-77-C-02-4544

fusion power systems department

Westinghouse Electric Corporation
P.O. Box 10864, Pgh. Pa. 15236

DISCLAIMER

This report was prepared as an account of work sponsored by an agency of the United States Government. Neither the United States Government nor any agency Thereof, nor any of their employees, makes any warranty, express or implied, or assumes any legal liability or responsibility for the accuracy, completeness, or usefulness of any information, apparatus, product, or process disclosed, or represents that its use would not infringe privately owned rights. Reference herein to any specific commercial product, process, or service by trade name, trademark, manufacturer, or otherwise does not necessarily constitute or imply its endorsement, recommendation, or favoring by the United States Government or any agency thereof. The views and opinions of authors expressed herein do not necessarily state or reflect those of the United States Government or any agency thereof.

DISCLAIMER

Portions of this document may be illegible in electronic image products. Images are produced from the best available original document.

ACKNOWLEDGEMENT

This work was performed for the Office of Fusion Energy of the U.S. Department of Energy under Contract EG-77-C-02-4544. Reproduction, translation, publication, use and disposal, in whole or in part, by or for the United States Government is permitted.

The authors would like to acknowledge and thank the members of the Fusion Power Systems Staff for their contributions to the program logic and component size and cost models. The code is essentially a compilation of the results of their efforts in the design and analysis of tokamak fusion reactors.

NOTICE

This report was prepared as an account of work sponsored by an agency of the United States Government. Neither the United States nor any agency thereof, nor any of their employees, makes any warranty, expressed or implied, or assumes any legal liability or responsibility for any third party's use or the results of such use of any information, apparatus, product or process disclosed in this report, or represents that its use by such third party would not infringe privately owned rights.

Printed in the United States of America
Available from
National Technical Information Service
U.S. Department of Commerce
5285 Port Royal Road
Springfield VA 22161

NTIS price codes
Printed copy: $8.00
Microfiche copy: A08

UC-20, 20D
WFPS:TME-79-023
SEPTEMBER 1979

USER'S MANUAL FOR COAST 4
A CODE FOR COSTING AND SIZING TOKAMAKS

PREPARED BY: D. A. Sink and E. M. Iwanski

REVIEWED BY: G. Gibson, Manager
Nuclear & Plasma Engineering

APPROVED BY: T. C. Varljen, Manager
Engineering

fusion power
systems department

Westinghouse Electric Corporation
P.O. Box 10864, Pgh. Pa. 15236

ABSTRACT

The purpose of this report is to document the computer program COAST 4 for the user/analyst. COAST, COst And Size Tokamak reactors, provides complete and self-consistent size models for the engineering features of D-T burning tokamak reactors and associated facilities involving a continuum of performance including highly beam driven through ignited plasma devices. TNS (The Next Step) devices with no tritium breeding or electrical power production are handled as well as power producing and fissile producing fusion-fission hybrid reactors. The code has been normalized with a TFTR calculation which is consistent with cost, size, and performance data published in the conceptual design report for that device. Information on code development, computer implementation and detailed user instructions are included in the text.

TABLE OF CONTENTS

Section No.		Page No.
	ABSTRACT	i
1.0	INTRODUCTION	1-1
2.0	TOKAMAK SUBSYSTEM MODELS	2-1
	2.1 PLASMA ENGINEERING IN COAST	2-2
	2.2 TOKAMAK ENGINEERING IN COAST	2-4
	2.3 COST ESTIMATES IN COAST	2-8
3.0	DEVELOPMENT AND VERIFICATION	3-1
4.0	RESTRICTIONS	4-1
	4.1 USER RESPONSIBILITY	4-1
	4.2 PROGRAM LIMITATIONS	4-1
5.0	USER INSTRUCTIONS	5-1
	5.1 COMPUTER REQUIREMENTS	5-1
	5.2 TYPICAL PROBLEM DECK SETUP	5-1
	5.3 INPUT DECK DESCRIPTION	5-2
6.0	DISCUSSION OF OUTPUT	6-1
	6.1 DESCRIPTION OF PRINTED OUTPUT	6-1
	6.2 DESCRIPTION OF THE IPLOT FILE	6-3
	6.3 DESCRIPTION OF ERROR FLAGS	6-3
7.0	REFERENCES	7-1
	APPENDIX A - COAST COMPUTER CODE ABSTRACT	A-1

LIST OF FIGURES

Figure No.		Page No.
2-1	COAST General Logic.	2-11
2-2	COAST Flow Diagram.	2-12
2-3	The Logic for Plasma Engineering in COAST.	2-13
2-4	Plasma Engineering Model in COAST Based on a Global-Energy Balance.	2-14
2-5	Schematic of Parabolic Profile Characteristics for the Plasma Minor Cross Section.	2-15
2-6	Plasma Engineering Profile Effects Formulated in COAST.	2-16
2-7	Plasma Pulse Behavior as a Function of Pulse Time (see Figure 2-8). The Various Times are Associated with the Input Data as Shown in Table 5-2.	2-17
2-8	Plasma Start-Up Calculation in COAST.	2-18
2-9	Detailed Illustration of a Tokamak (TNS) with a Standard-D TF Coil, PF Coils within TF Bore, PF Coils all Normal Cu, no Blanket or Divertor.	2-19
2-10	Illustration of a Tokamak with a Blanket on the Outer Half of the Vacuum Vessel and a-1 S/C Coils with all PF Coils Outside TF Coil Bore.	2-20
2-11	NB Injector Arm Geometry (The Number of Sources is Optimal. Two are Shown for Illustration Only.)	2-21
2-12	NB Injector Arm Source Geometry. The Number of Sources and Their Arrangement in Rows and Columns are Set by Input Design Detail (see Figure 2-13 for another example).	2-22
2-13	NB Injector Arm Source Geometry and Data for TFTR.	2-23
2-14	Geometry Associated with the Compact Space-Charge Controlled Ion Collector and/or Energy Recovery System for the Neutral Beam Injection System.	2-24
2-15	Geometrical Considerations for the Access Requirements Associated with the Neutral Beam Injector Arm Duct to the Vacuum Vessel.	2-25
2-16	Detailed Schematic of NB Injection Geometry Considerations Showing the Aiming of the Sources.	2-26

LIST OF FIGURES (CONTINUED)

Figure No.		Page No.
2-17	Schematic Diagram and Calculations for the Estimation of the Efficiency (Electrical Power to Injector Beam Power) Associated with NB Heating.	2-27
2-18	Blanket/Shield Assembly Geometry for the Region on the Outer Half of the Vacuum Vessel.	2-28
2-19	Schematic of the Heat Flow Model in COAST. Calculational Procedures to Obtain Magnitudes During a Plasma Burn are Shown.	2-29
2-20	Thermal to Electrical Power Conversion System.	2-30
2-21	Fusile Fuel Systems Schematic.	2-31
2-22	Compact Bundle Divertor Geometrical Considerations in COAST.	2-32
2-23	Compact Poloidal Divertor Geometrical Considerations in COAST.	2-33
2-24	Schematics of Each of the Three TF Coil Geometries with a List of the Four Coil Technologies Modeled in COAST.	2-34
2-25	Detail Schematic of the Cu/NbTi "HYBRID" TF Coil Geometry Option (TNS-5).	2-35
2-26	TF/OH Coil Cross Section for S/C Nb_3Sn TF Coil and a Cu OH Coil.	2-36
2-27	S/C Conductor Temperature as a Function of Maximum B-Field at the Conductor Modeled in COAST.	2-37
2-28	Two PF Coil Geometrical Configurations Modeled in COAST.	2-38
2-29	Schematic of a Geometrical Model Option for an EF Coil System with Coils Located Inside the TF Bore.	2-39
2-30	The EF Coil Locations are Adjusted from the Reference Locations Consistent with Sizing Changes.	2-40
2-31	A Simplified Schematic Diagram Showing the Basic Features of the Heat Dissipation System Associated with a Pulsed Heat Load Characterized by a Peak Power, an Average (over the pulse) Power, and a Total Energy Production During the Pulse.	2-41
2-32	Schematic Representation of the Various Pulsed Thermal Loads for Which a Heat Dissipation System Represented in Figure 2-31 is sized in COAST.	2-42

LIST OF FIGURES (CONTINUED)

Figure No.		Page No.
2-33	Schematic of the Basic Circuits Associated with the PF Coil Power Supplies Sized in COAST.	2-43
2-34	Typical Power Supply Circuit for Neutral Beam Source.	2-44
2-35	Two Views of the Reactor Cell.	2-45
2-36	A Schematic Representation of a Tokamak Reactor Facility.	2-46
2-37	The Main Systems for which COAST Calculates Costs.	2-47
	COAST Flow Diagram	A-5

LIST OF TABLES

Table No.		Page No.
2-1	PLASMA ENGINEERING ASSUMPTIONS FOR THE ITERATION CALCULATIONS INDICATED IN THE LOGIC DIAGRAM, FIGURE 2-3.	2-48
2-2	SUMMARY OF COAST MODELS FOR TOKAMAK ENGINEERING	2-49
2-3	TABULATION OF THE VARIOUS TOKAMAK FACILITIES FOR WHICH COAST COST DATA IS REQUIRED TO COMPLETELY COST ALL SYSTEMS	2-53
2-4	COAST COST MODEL EQUATIONS FOR A NUMBER OF THE ELECTRICAL SYSTEMS	2-54
2-5	COAST COST MODEL EQUATIONS FOR THE TRITIUM STORAGE SYSTEM AND THE HEAT DISSIPATION SYSTEM	2-56
5-1	COAST INPUT DECK -- CONTROLS AND OPTIONS	5-3
5-2	COAST INPUT DECK -- PLASMA AND PLASMA OPERATING DATA	5-8
5-3	COAST INPUT DECK -- DEVICE OPERATING DATA	5-12
5-4	COAST INPUT DECK -- TOKAMAK SIZING PARAMETERS	5-13
5-5	COAST INPUT DECK -- NEUTRAL BEAM SYSTEM	5-26
5-6	COAST INPUT DECK -- TRITIUM SYSTEM	5-29
5-7	COAST INPUT DECK -- COOLING SYSTEM	5-30
5-8	COAST INPUT DECK -- DEVICE STRUCTURE	5-33
5-9	COAST INPUT DECK -- REACTOR CELL AND FACILITIES	5-34
5-10	COAST INPUT DECK -- UNIT COST COEFFICIENTS FOR REFERENCE YEAR, YRST TOKAMAK SYSTEM	5-35
5-11	COAST INPUT DECK -- UNIT COST COEFFICIENTS FOR REFERENCE YEAR, YRST DTHR OUTER BLANKET/SHIELD REGIONS	5-38
5-12	COAST INPUT DECK -- UNIT COST COEFFICIENTS FOR REFERENCE REFERENCE YEAR, YRST ELECTRIC POWER AND CONTROL SYSTEM	5-40

LIST OF TABLES (CONTINUED)

Table No.		Page No.
5-13	COAST INPUT DECK -- UNIT COST COEFFICIENTS FOR REFERENCE YEAR, YRST TOKAMAK SUPPORT SYSTEMS	5-43
5-14	COAST INPUT DECK -- UNIT COST COEFFICIENTS FOR REFERENCE YEAR, YRST STRUCTURES AND SITE SERVICES	5-51
5-15	COAST INPUT DECK -- UNIT COST COEFFICIENTS FOR REFERENCE YEAR, YRST NEUTRAL BEAM SYSTEMS	5-53
5-16	COAST INPUT DECK -- UNIT COST COEFFICIENTS FOR REFERENCE YEAR, YRST REFERENCE UNITS AND ECONOMY-OF-SCALE (EOS) EXPONENT	5-54
5-17	COAST INPUT DECK -- UNIT COST COEFFICIENTS FOR REFERENCE YEAR, YRST INDIRECT COST	5-60
5-18	COAST INPUT DECK -- UNIT COST COEFFICIENTS FOR REFERENCE YEAR, YRST OPERATING COST	5-61
6-1	VARIABLES STORED ON IPLOT TAPE FOR EACH DEVICE	6-4
6-2	ERROR CONDITIONS RECOGNIZED BY COAST-4	6-6

1.0 INTRODUCTION

The COAST code was developed to COst And Size Tokamak reactors so that scoping studies could be performed on a wide range of plasma sizes, device sizes, operating scenarios, operating margin, and component geometric and performance constraints. The results of analyses in a wide range of mechanical, electrical, thermal, nuclear, chemical, and plasma disciplines are incorporated into the modeling of over fifty-six systems and subsystems in the code.

In a run the code routinely sizes each device with respect to a common set of plasma conditions and engineering ground rules, taking into account the geometry and performance constraints of one system on another as the device physical model develops. When the sizing analysis of a device is completed, the significant parameters are presented in the output. Then, in addition to evaluating both direct and indirect plant and capital equipment costs, annual utility and fuel expenses are predicted.

Among the major options available, four coil technologies are evaluated within the code; these include 1) copper (both room temperature and liquid nitrogen cooled); 2) superconducting (S/C) NbTi; 3) S/C Nb_3Sn; and 4) a Cu/NbTi nested coil hybrid. The coil geometry can be constant tension D-shape, circular, or a compact D-shape.

The PF coils may be copper or superconducting and located either inside or outside the TF coils. These coils may be fixed with input generated by analysis outside the code or, based on detailed geometric input, they may be sized for the device and their electrical performance based on an accurate calculation of coil-coil and coil-plasma inductance terms all of which is handled routinely in a consistent manner with respect to the other systems within the code. A blanket/shield system accounts for fissile fuel, tritium, thermal power, and the possibility of electrical power production. The tokamak support systems include options in fuel handling, heat dissipation (LHe, LN_2, H_2O), divertor

and vacuum pumping, reactor cell ventilation, and electrical power supply facilities.

Plasma calculations which model energy and particle balance, alpha particle effects, profile effects, and $\bar{n}_e\tau_E$ scaling are performed for beam-driven and ignition conditions. A neutral beam injection system models the neutralizer, vacuum pumping, heat loads, and power levels. The fueling system is sized to account for divertor operation. While choice of a poloidal divertor only assures space for its physical presence, the bundle divertor system sizes the coil assembly and burial chamber.

From its inception, the code was extended and upgraded; the fourth version is documented here. Each member of the Fusion Power Systems Department contributed to the geometric sizing and constraint modeling equations for the various components according to his discipline. These models were then accumulated and organized into a logical framework around first the coil technologies considered, then the plasma conditions to be satisfied, and finally the engineering ground rules to be applied.

The program that developed was coded in FORTRAN IV to be compiled and executed on a CDC-7600 computer. No attempt was made to take advantage of special computer features. In the programming process, the first and foremost concepts as guidelines were readability and a clarity of purpose. This not only made debugging less difficult but also program maintenance as COAST 1 developed into COAST 4. Even with modularization of specific tasks in the form of subroutines, the main program remains quite large. However, it is partitioned into sections related to somewhat less specific but nevertheless easily identifiable tasks. Each task is first labeled and then sprinkled with comment cards in the deck. On occasion, whole sections of code were rewritten to avoid "patched code," and primitive models were replaced as better ones were developed and proven. Since a great deal of information is required as input, a correspondingly great deal of effort was expended to identify the I/O variables and include appropriate units of measure not only as comments in the program listing but also in the output formats in deference to the user.

Nevertheless, for its length the code runs rapidly. Approximately 0.4 seconds are required to complete a calculation for a single tokamak device. But then, five devices with minor differences can be compared in 1.1 seconds (0.001 CRU-S) on the CDC-7600 by taking advantage of the variation options available. So, for multiple cases a device is sized and costed on the order of 0.2 seconds.

In the following text, a description of the tokamak systems modeled in the code will be given and the relationship between systems will be discussed and illustrated with logic diagrams. Specific user instructions will be provided with some discussion of the input variables; and restrictions will be noted. The flow of the solution process will be followed, and a typical output will be discussed. For a summary description of the COAST code see Appendix A.

2.0 TOKAMAK SUBSYSTEM MODELS

The version of COAST presently in operation is the fourth and has evolved out of engineering studies of tokamak systems conducted over the last two years by the Fusion Power Systems Department.

The logic system for COAST is organized in a main program which consists of sections dedicated to specific subsystems and linked in a sequential manner. Subroutines relating to a single subsystem or functional relationship are called usually by option but are also called in some areas where the main program coding became too cumbersome and partitioning was indicated. In each COAST section or subroutine, all the data which specifies a subsystem is generated. This includes first the data relevant to a self-consistent description of that system and second the data required to allow the system to be sized consistently with each of the other tokamak components. The sequence of calculations coded in COAST are organized as if one were "building" the tokamak and facility around the plasma core with the components nearest the core modeled first. As each subsystem is specified, data is generated which allows the next subsystem to be described consistently with previous calculations in a given computer run.

The initial section in COAST is the INPUT DATA, and the first section involving model calculations is PLASMA ENGINEERING. The plasma core is modeled to provide a description of the transient period starting with the plasma initiation and current build up and ending in the steady state period of pulsing when temperatures, densities, power levels, etc., are time independent. These calculations, with the engineering data provided as input, form the basis to "build" the tokamak which provides the conditions necessary for the plasma to form and operate in the manner prescribed in the plasma model. Following the PLASMA ENGINEERING Section, a series of sections and subroutines are linked into a system, TOKAMAK ENGINEERING, which allows for a complete and detailed description of the tokamak reactor and accompanying facility. This series of models

forms the bulk of the COAST coding and provides details on the thermal, electrical, mechanical, magnetic, nuclear, vacuum, and facility engineering design. After the tokamak is "built," the coding provides COST ESTIMATES for the resulting device and facility. This is the last section in COAST which involves model calculations; the final section is the OUTPUT DATA. The COAST costing models process each subsystem to be costed while summing the components to provide a total capital cost (including direct and indirect costs and an estimate of escalation). An annual cost for the purchasing and selling of electricity and tritium is then estimated. The OUTPUT DATA Section has been carefully designed to provide calculational results which characterize the features of the tokamak systems ranging from highly detailed edits to an overall summary of design performance and cost. The length of the printed output is controlled by option. Data that is printed is carefully labeled to assist the user. A logic diagram showing the general features of COAST as just described is given in Figure 2-1.

As indicated above, the TOKAMAK ENGINEERING portions of COAST form the heart of the code. With the general logic as shown in Figure 2-1 in mind, a more detailed description of the COAST logic is shown in Figure 2-2 where TOKAMAK ENGINEERING is expanded within the dashed box. Each of the tokamak subsystems indicated are briefly described below, following the discussion of Plasma Engineering.

2.1 PLASMA ENGINEERING IN COAST

The models for calculating plasma parameters during the steady state operation of the pulse have been developed to provide the interface data necessary to size the accompanying systems required to support the plasma operation. These systems include magnetic field coils, neutral beams, nuclear shielding, fuel supply and exhaust systems, and heat dissipation. The following is a list of features which have been incorporated into the plasma model:

- Calculates both energy and particle balance conditions for either an ignited plasma or a beam-driven plasma

- Computes the effects of alpha-particle production on the bulk plasma particle density and the plasma beta

- Incorporates the results from slowing-down theory in obtaining fast particle populations of alpha-particles and hot ions created by neutral beam injection

- Calculates fusion reaction rates from both plasma-plasma and beam-plasma interactions

- Includes impurity effects and energy losses due to radiation

- Assumes the plasma is composed of seven particle groups: 1) bulk electrons; 2) bulk deuterium ions; 3) bulk tritium ions; 4) impurity ions; 5) bulk alpha-particles; 6) fast alpha particles; and 7) fast deuterons from neutral beams (if in beam-driven mode).

- Estimates fusion reaction rates, beta values, and $\bar{n}_e \tau_E$ values assuming profile effects

- Scales the product $\bar{n}_e \tau_E$ in a generalized manner as a function of plasma density, radius, stability factor, field-on-axis, aspect ratio, and/or plasma temperature.

The above features are incorporated self-consistently in COAST and the results are obtained through iteration. See Figures 2-3 thru 2-6 and Table 2-1. Based on the results, one can fix the magnetic field requirements, particle fueling rates, plasma power and wall loading levels, magnitude of the plasma current, and neutral beam power and energy requirements.

To complete the modeling of the plasma, calculations describing the plasma initiation and start-up are carried out in COAST. Figures 2-7 and 2-8 show pulse scenario. The model provides an estimate of the time profiles for the plasma current, inductance, resistence, and voltage, and predicts the volt-seconds associated with the plasma resistive losses. From these results, the current and voltage requirements for the various poloidal field coils can be calculated so that the ratings on power supplies can be obtained.

2.2 TOKAMAK ENGINEERING IN COAST

The engineering models for the tokamak and facility are incorporated into the coding in the logic system indicated in Figure 2-2. Each block in that diagram represents a subsystem (or set of subsystems) which are coded as a COAST section or subroutine. A very brief description of each block follows and Table 2-2 provides a summary tabulation of the main engineering features in each model.

The TF COIL BORE SPACE and SHIELD SIZING models provide the basis for establishing the space requirements within the TF coil bore. See Figure 2-9 for a detailed schematic of one sizing option and Figure 2-10 for a schematic of another. Each figure indicates the bore space and shielding considerations applied. Space requirements for the vacuum vessel, radiation shielding, equilibrium field (EF) coil, access and maintenance, and TF coil dewar (if S/C), besides, the plasma and limiter/liner/scrape-off regions are calculated. For the SHIELD SIZING, both nuclear heating limits and dose limitations to conductor insulation are taken into account.

The NEUTRAL BEAMS model is coded as a subroutine and involves detailed calculations for sizing the beam arms, estimating the operating parameters, and evaluating the power supplies for either direct energy recovery or for operating without a recovery system. The charged-particle source geometry, gas-channel neutralizer sizing, ion collector plates, and vacuum pumping are taken into account in the model. Electrical, heat, and vacuum pumping loads are estimated for the engineering parameters supplies via the INPUT DATA. See Figure 2-11, which gives the geometry. The models provide a detailed description of the neutral beam system in addition to providing access requirements to size TF coils, heat dissipation and power consumption requirements, and size requirements for the reactor cell model. See Figures 2-12 thru 2-17.

The BLANKET SIZING model is in the form of a subroutine and allows for the engineering of a blanket assembly covering the outer half of the vacuum vessel besides a power conversion system to produce electricity from the blanket thermal power. The assembly is modeled as consisting of up to six zones where

each zone is made up of up to six volume fractions of any chosen material. Production of power, tritium, and fissile fuel are modeled. The power production systems include heat exchangers, generators, cooling, and energy storage. See Figures 2-18, 2-19, and 2-20.

The FUEL SYSTEMS models, as illustrated in Figure 2-21, include one set for either of two models, a system operating in a batch mode and a system operating continuously. The fueling of the plasma is a function of the plasma parameters and the neutral beam parameters. The continuous mode fueling is based on a divertor system exhausting the plasma during the burn, and includes systems for tritium storage, deuterium storage, fuel fabrication and injection, plasma exhaust processing, and cryodistillation processing. In addition, tritium clean-up systems are sized for processing the gases in the vacuum vessel during up-to-air operations and in the reactor cell during maintenance periods.

The COAST modeling of tokamak divertors involves a detailed system of coding for sizing bundle divertors and a less elaborate system for sizing poloidal divertors (see Figures 2-22 and 2-23). The bundle divertor coil assembly is modeled in the BUNDLE subroutine, while the bundle divertor burial chamber and heat dissipation system are sized within the main program. Access requirements for each divertor system are evaluated and used in the sizing of the TF coil assembly.

The section indicated by FIELD AT INNER LEG is a branch point in COAST which represents a calculation critical to both the plasma engineering and the tokamak engineering. The maximum B-field at the inner leg of the TF coil is constrained by the mechanical/thermal design of the coil and by the requirement for a given field on the plasma axis. This section evaluates these constraints and calculates the field taking any ripple in the TF into consideration. As a result of the calculation, the coding allows the calculation to continue, to adjust the plasma field conditions, or to terminate due to a violation of engineering ground rules set by the input.

The TF COIL SIZING section of the code is the central link in the "building" of the tokamak system. All the above models (except for the FUEL SYSTEMS) communicate at this point and all the subsequent calculations are impacted by the results of the TF COIL SIZING. The TF coil bore space dimensions are calculated on the basis of constraints established by: 1) the component and plasma space requirements within the TF bore; 2) the plasma ripple requirements at the outer plasma surface; 3) the access requirements for neutral beam injection, and 4) access requirements for the divertor (if sized). The engineering models allow for the sizing of coils for four different technologies: 1) copper (room temperature or liquid-nitrogen cooled); 2) S/C NbTi; 3) S/C Nb_3Sn; and 4) Cu/NbTi hybrid. In the sizing of the assemblies, the models allow coil shapes which are either constant-tension D, circular, or compact D. See Figures 2-24 and 2-25 for schematics. The mechanical design of the coils is accomplished through generalized descriptions which account for strain limits, cooling requirements, construction (bolted or welded), and current density in the conductors. See Figure 2-26 for a schematic showing the main features of the COAST model of the mechanical design. The coil assembly sizing results impact the design of the poloidal field (PF) coils, the heat dissipation systems, the power supply ratings, the reactor cell size, and is the major element in the resulting tokamak geometry. The TF coil centering forces are assumed to be handled by wedging in designs where a bucking cylinder is not incorporated. The temperature of the S/C current element is given in Figure 2-27. The BUCKING CYLINDER Section sizes this structure to handle a part or all of the centering forces for D-shaped coils and to be stable against both compression and buckling modes of failure.

After the TF coils are sized, COAST evaluates the critical requirements on the machine space which is occupied by the OH coil. The section on OH COIL SIZING addresses the mechanics and magnetics associated with the machine bore to first determine if a coil assembly is possible within the ground rules established by input data, and second to calculate the coil parameters if a coil assembly can be accommodated. The model, using an iterative procedure, calculates the parameters which minimize both the coil stress and the conductor current density. The maximum magnetic field is estimated and checked against engineering limits.

The PF SYSTEM GEOMETRY AND RATING subroutine includes a sophisticated model for a detailed description of the coil assembly geometry (see Figures 2-28 and 2-29 for details). The time-dependent behavior of the voltages and currents in each coil set are also modeled to provide the necessary volt-seconds and equilibrium shaping fields to sustain the plasma. The sizing models are general and allow for either normal or S/C coils where the equilibrium shaping field coils can be located either within the TF coil bore or outside the TF bore. The scaling approach is illustrated in Figure 2-30. The inductance matrix for coil self-inductances and for coil-coil mutuals and coil-plasma mutuals is calculated by a unique procedure which is both accurate and fast. The resulting matrix elements are consistent with the PF coil geometry which in turn is consistent with the sizing of the remaining tokamak components. From the time-profiles of the voltages and currents in each coil set, the required instantaneous power and accumulated energy delivered are estimated for usage in a later COAST calculation to estimate power supply costs. The coil currents are calculated from models which scale a reference set of coil currents and locations. The reference set is introduced as input data and preferably should result from a plasma equilibrium and stability calculation.

The code calculations for the POWER SUPPLY SYSTEMS and HEAT DISSIPATION SYSTEMS account for all the various electrical and thermal loads generated in the field coils, neutral beam arms, vacuum vessel, and blanket/shield. A schematic of a heat dissipation system is shown in Figure 2-31. The various pulsed thermal loads associated with heat production are shown schematically in Figure 2-32. The models have been developed for water-cooled heat dissipation systems except for those cases in which the magnetic field coils are superconducting. Then, the system model accounts for a combination of liquid helium and liquid nitrogen coolants. The PF coil power supply models include the detail required to rate rectifiers, transformers, switches, capacitor banks, and diodes (see Figure 2-33). A schematic of the electrical circuit associated with a neutral beam ion source is shown in Figure 2-34. For PF coils, copper TF coils, and NB ion sources, motor-generator-flywheel sets have been modeled. For those tokamaks which are beam-driven the model includes a substation and a load smoothing circuit.

The final set of model equations for the TOKAMAK ENGINEERING relate to the REACTOR CELL AND BUILDINGS. In this model, the reactor cell sizing is obtained by taking into account the tokamak dimensions and the neutral beam arm sizing and maneuvering requirements. The reactor cell is a cylindrical dome-top structure of concrete with a basement for the containment of the tokamak support and diagnostic systems. A plane and elevation view of the reactor cell is shown in Figure 2-35. The remaining buildings are not explicitly sized, but the costing input data provides a vehicle for estimating the complete facility including all buildings. A schematic of the facility used in estimating cost data is shown in Figure 2-35 and a tabulation of the buildings and structures is given in Table 2-3.

The TOKAMAK ENGINEERING ends with a tabulation of the TOKAMAK GEOMETRY TABLE. Dimensions for regions in the device mid-plane and for corresponding regions in the vertical direction over the plasma center are listed. The tabulation includes component region widths and the corresponding outer radius from the device center or device mid-plane, respectively. The table provides a means to quickly check out the sizing results and provides data for engineering drawings.

2.3 COST ESTIMATES IN COAST

The COAST code was designed as a tool for tokamak engineering studies, component design studies, and engineering trade studies, and also for costing of the resulting designs. The modeling system incorporated in the COST ESTIMATES sections of COAST has been carefully constructed to allow for a wide variety of resulting designs and also to allow costing data to be applied in a form which is essentially device independent. To provide this feature, a system of costing equations were developed which required two types of data: 1) costing data on the materials and components; and 2) sizing results on amounts of materials required or on component ratings. The main systems for costing purposes are shown in Figure 2-37.

The costing data is supplied as input in COAST and consists of the following:

- unit cost coefficients
- economy of scale parameters

- indirect costing parameters
- escalation percent per year
- operating costs

The unit cost coefficients are in the form of cost per unit size or rating, and in the case of studies by the Westinghouse FPSD, are the results of a bottoms-up estimate of the materials and manufacturing costs for a reference year. In estimating the costs of several systems, it was found necessary to establish an economy of scale, and the scaling parameters (exponents and reference ratings). These are supplied as input allowing data changes without requiring coding changes. Indirect costs are handled as percentages of the direct capital costs and include shipping and handling, installation, EDIA, and contingency factors. Escalation is handled component-by-component, and is a single rate for all components provided as input. Operating costs include utility and tritium costs. Electrical production and tritium production are calculated and for a selling price (input data) are subtracted from operating expenses. If costs are negative in value, the facility is a net producer and not a net consumer, as would be the case in costing procedures for a commercial electric power plant.

For the second type of data required in the costing equations, i.e., the sizing results, the TOKAMAK ENGINEERING models calculate all the essential data required so that it is available when the cost calculations begin. For example, masses of magnetic coil assembly components (conductor and structure), volumes of radiation shielding material, stainless steel, power supply ratings, and thermal loads are all required in the cost estimation. The sizing results are strongly device dependent, whereas the cost coefficient data are, in general, device independent and are generated as input data from a separate costing procedure.

There are several forms for the costing equations. The simplest form is a product of a unit cost coefficient U_{cc} multiplied by a size or rating S, i.e.,

$$COST = U_{cc} \times S.$$

If the costing involves economy of scale, the cost is given by

$$COST = U_{cc} \times (S/S_r)^E.$$

where S_r is the reference unit size, and E is the economy of scale exponent. For E = 1, and S_r = 1, the above two equations are identical. For many components there are more than one rating or size involved, so that the most general form of the costing equation is given by

$$COST = \sum_{i=1}^{I} U_{cc,i} \times (S_i/S_{r,i})^{E_i}$$

as an example, the cost of the power supplies for a neutral beam ion sources is given by:

$$COST = U_{cc,1} + U_{cc,2}\left(\frac{I_{IS}}{I_R}\right)^{0.8} + U_{cc,3}\left(\frac{P_{IS}}{P_R}\right)^{0.8} + U_{cc,4} \times R_{NB}$$

where I_{IS} and I_R are the currents for the source being costed and the reference source, P_{IS} and P_R are the powers for the source under study and the reference, and R_{NB} is a multiplier associated with the number of switch tubes per supply. To obtain the magnitudes of the unit cost coefficients a detailed study was carried out on power supplies with ratings required for application to neutral beam ion sources, and the reference system was the TFTR Neutral Beam System.

Overall, there are approximately 200 unit cost coefficients and 40 economy of scale parameters required as input data. The costing procedure for evaluating capital costs include approximately eighty model equations. Some examples of cost model equations are shown in Tables 2-4 and 2-5. See Reference 8 for unit cost data developed for earlier versions of COAST.

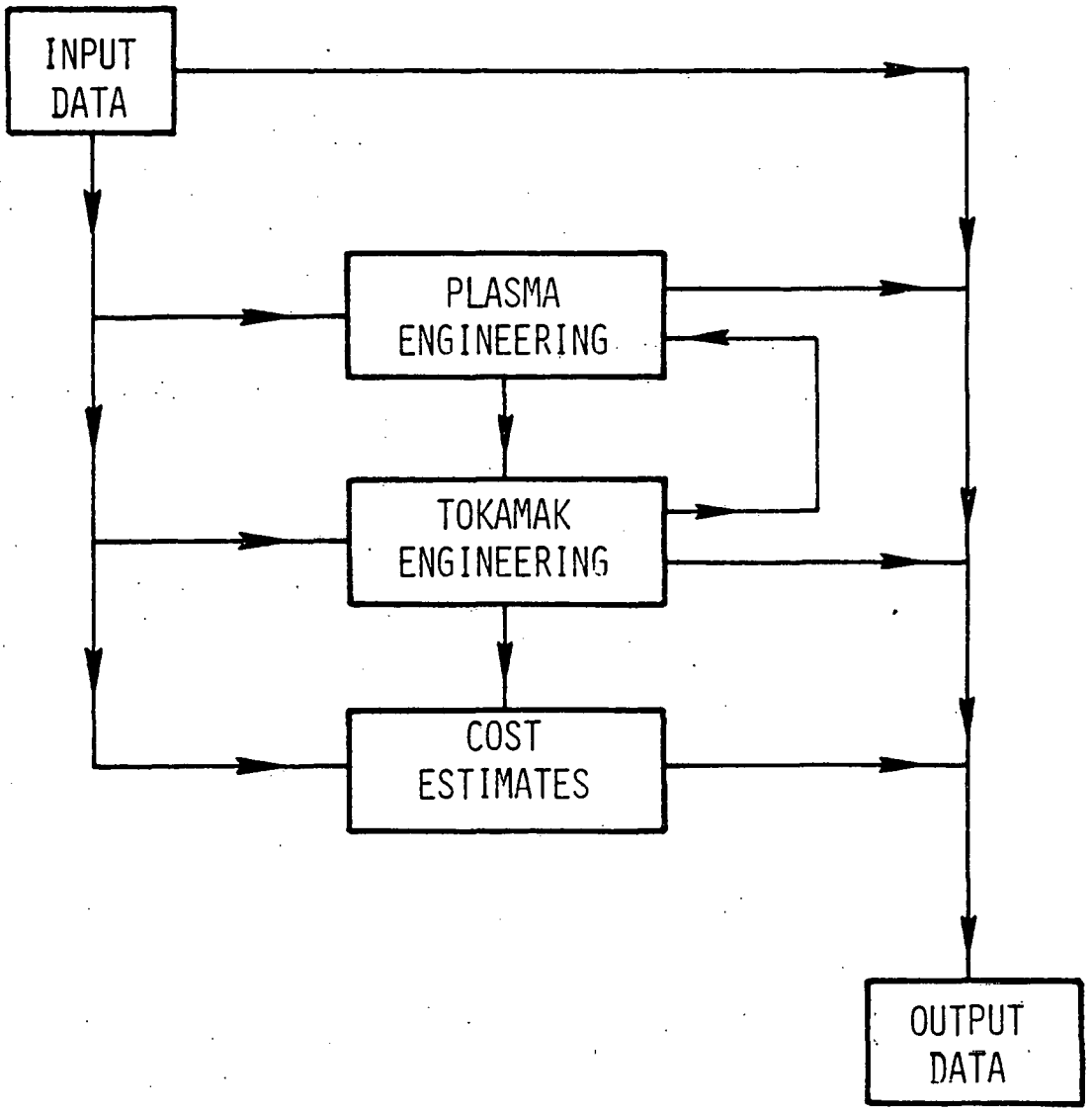

Figure 2-1. COAST General Logic

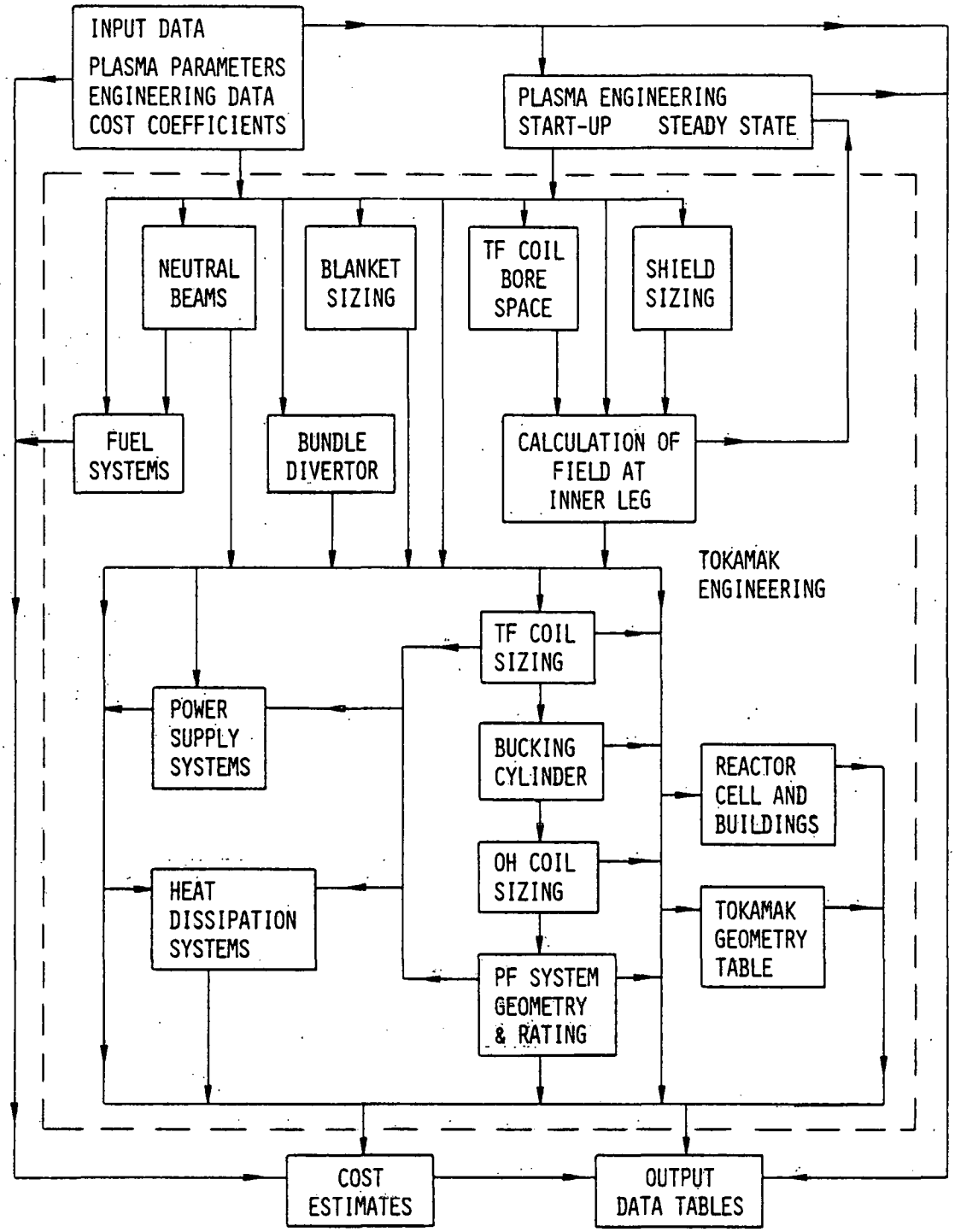

Figure 2-2. COAST Flow Diagram.

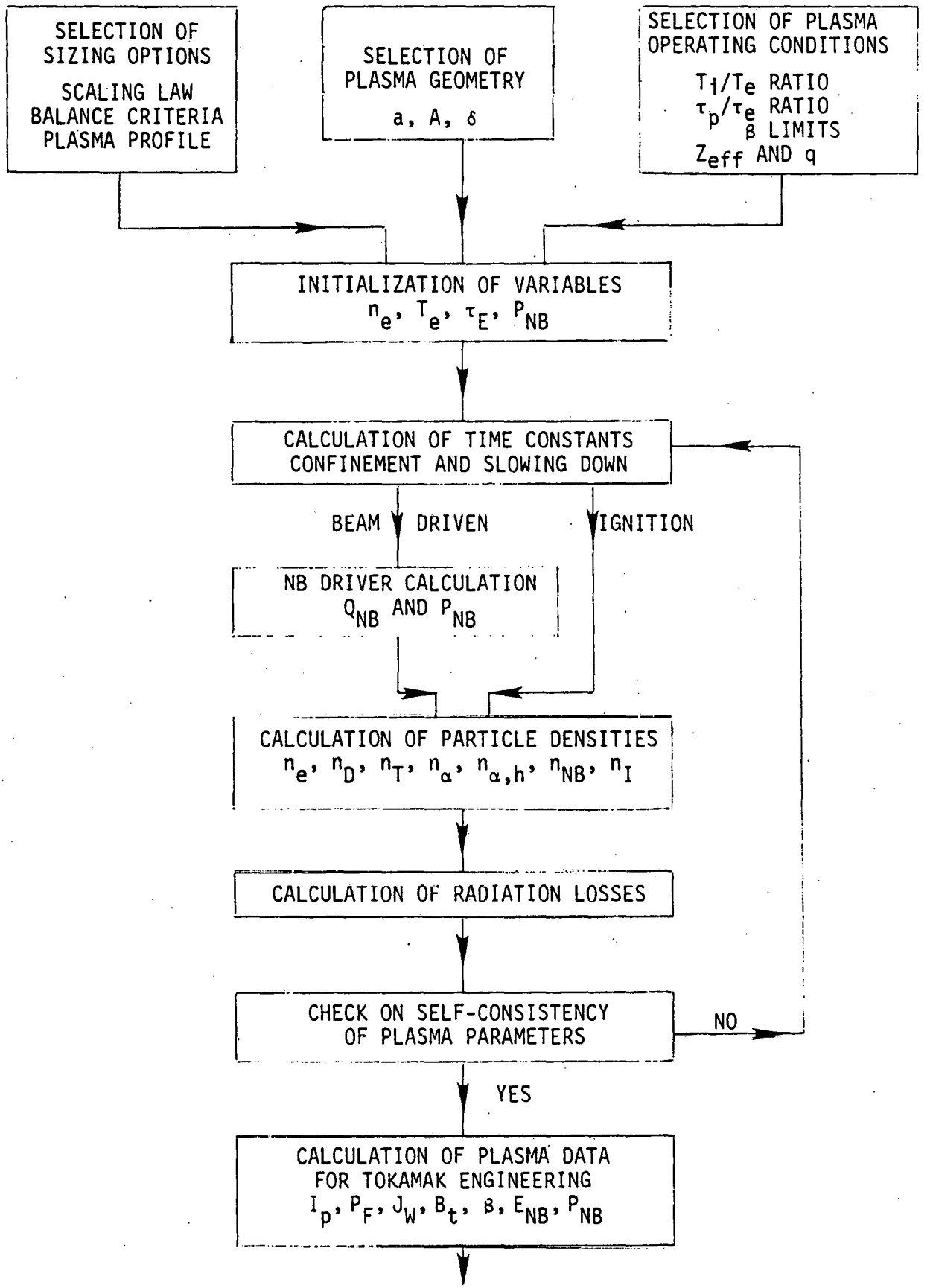

Figure 2-3. The Logic for Plasma Engineering in COAST.

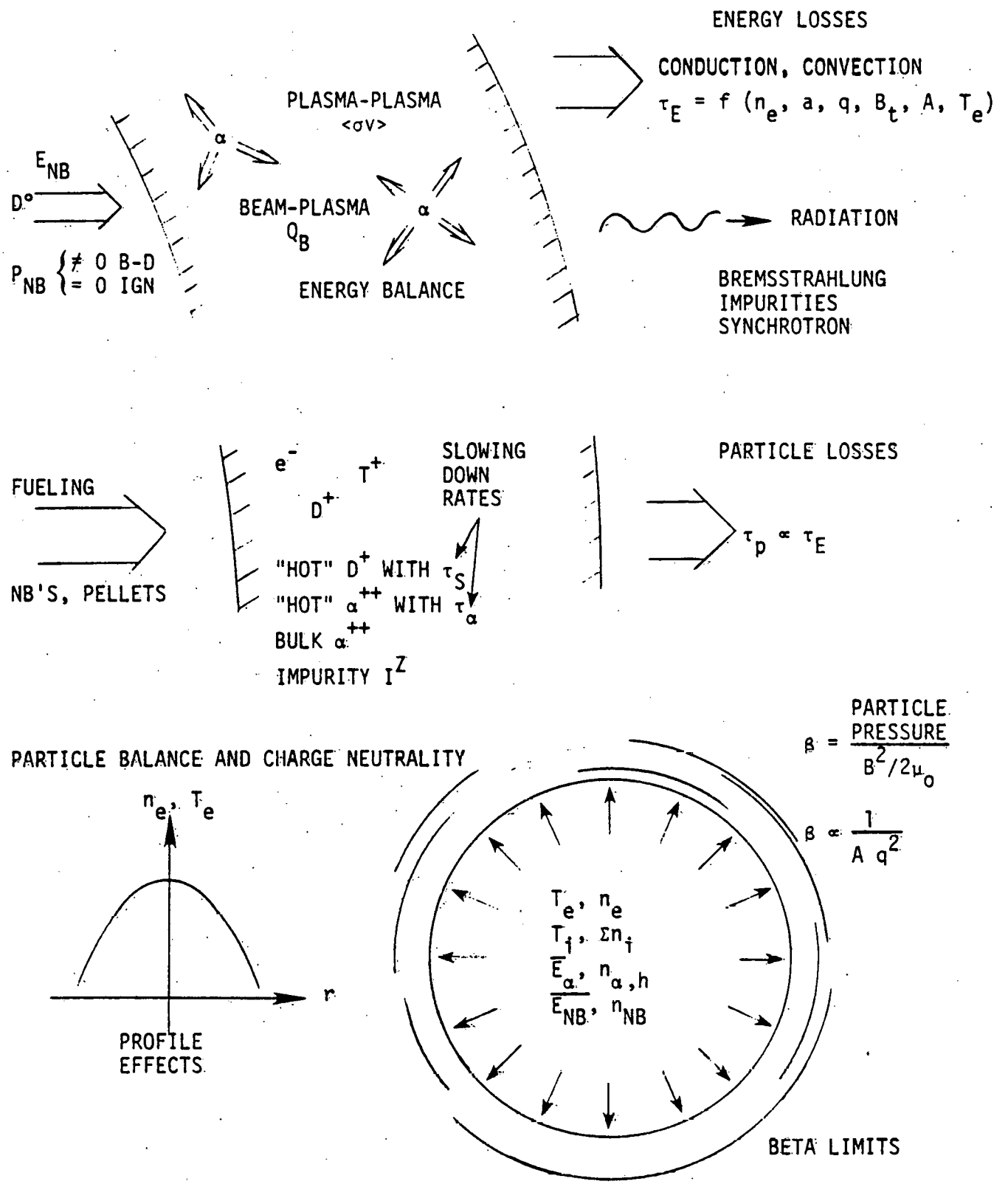

Figure 2-4. Plasma Engineering Model in COAST Based on a Global-Energy Balance (see Reference 1).

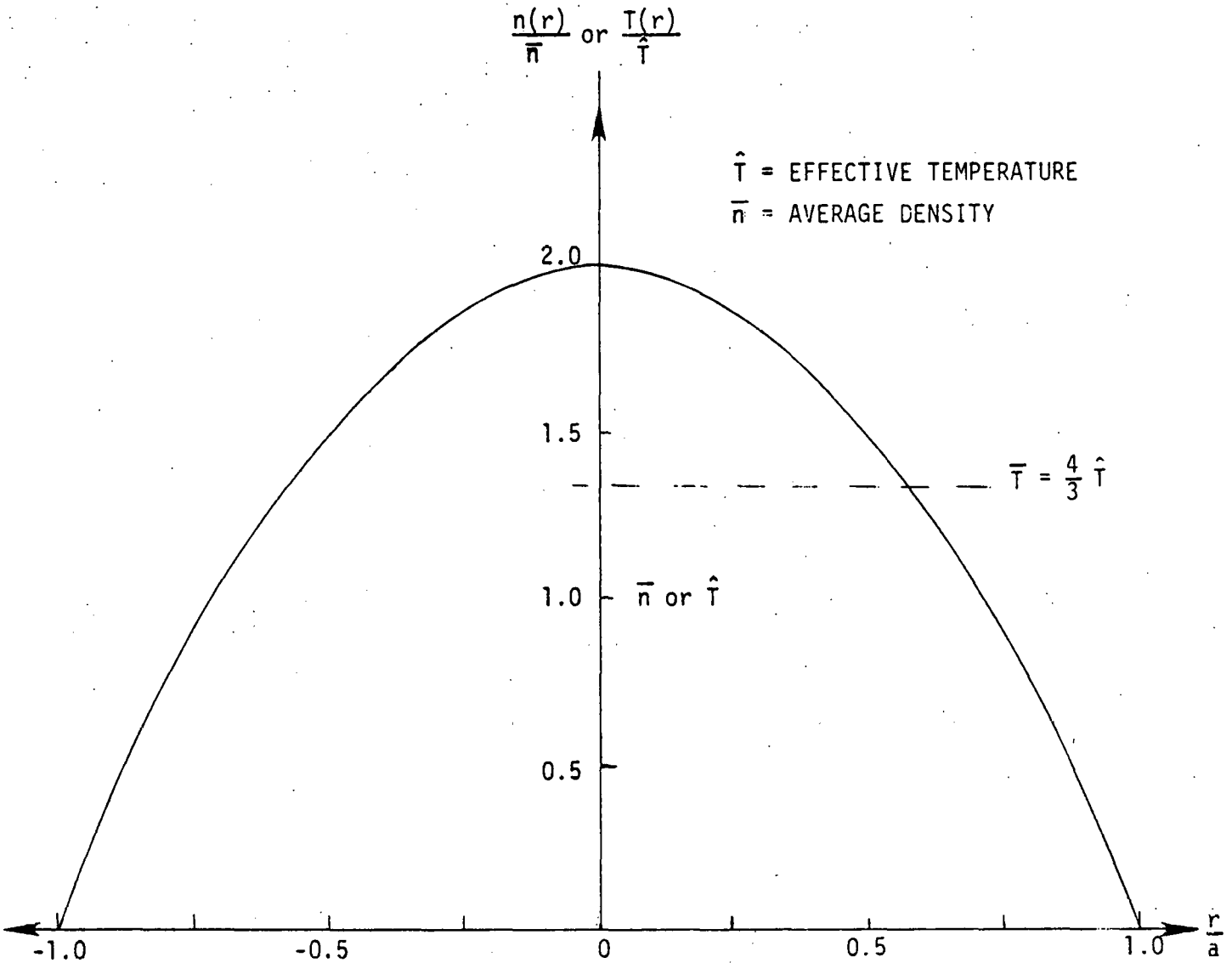

Figure 2-5. Schematic of Parabolic Profile Characteristics for the Plasma Minor Cross Section.

$$n(r) = \bar{n}\, f(r) \qquad \text{DENSITY FUNCTION}$$
$$T(r) = \hat{T}\, f(r) \qquad \text{TEMPERATURE FUNCTION}$$
$$f(r) = (1 + \delta)\,(1 - (r/a)^2)^{\delta} \qquad \text{PROFILE FUNCTION}$$
$$\delta = 0, 1, 2, \ldots \text{ for uniform, parabolic, other, } \ldots$$

INTEGRAL AVERAGE

$$\bar{f} = \frac{1}{\pi a^2} \int_0^a f(r)\, 2\pi r dr$$
$$\overline{nT} = \overline{f^2}\, \bar{n}\, \hat{T}$$
$$\bar{T} = \overline{f^2}\, \hat{T}$$
$$T_{eff} = g_1\, \hat{T}$$

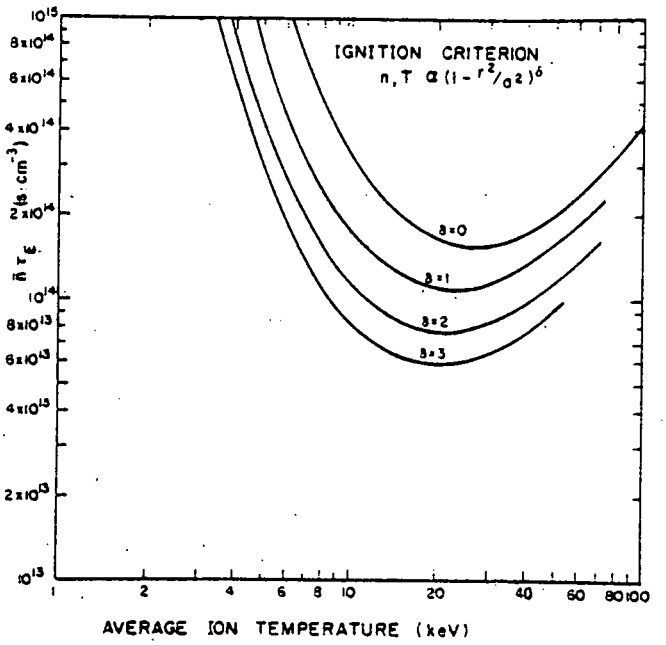

$$\overline{n_D n_T \langle\sigma v\rangle} = g_2\, \bar{n}_D \bar{n}_T \langle\sigma v\, (T_{eff})\rangle$$

$$W_{BREM}\ (\text{MW m}^{-3}) = 4.8 \times 10^{-43}\, \overline{f^{5/2}}\ \overline{n\ (\text{m}^{-3})^2}\ Z_{eff}\, \hat{T}_e\ (\text{keV})^{1/2}$$

The profile is characterized by the magnitudes of $\overline{f^2}$, g_1, g_2, and $\overline{f^{5/2}}$

For uniform $\overline{f^2} = g_1 = g_2 = \overline{f^{5/2}} = 1$

For parabolic $\overline{f^2} = 4/3$, $g_1 \approx 5/3$

$g_2 \approx 1.12$, $\overline{f^{5/2}} \approx 1.62$

Figure 2-6. Plasma Engineering Profile Effects Formulated in COAST (see Ref. 1)

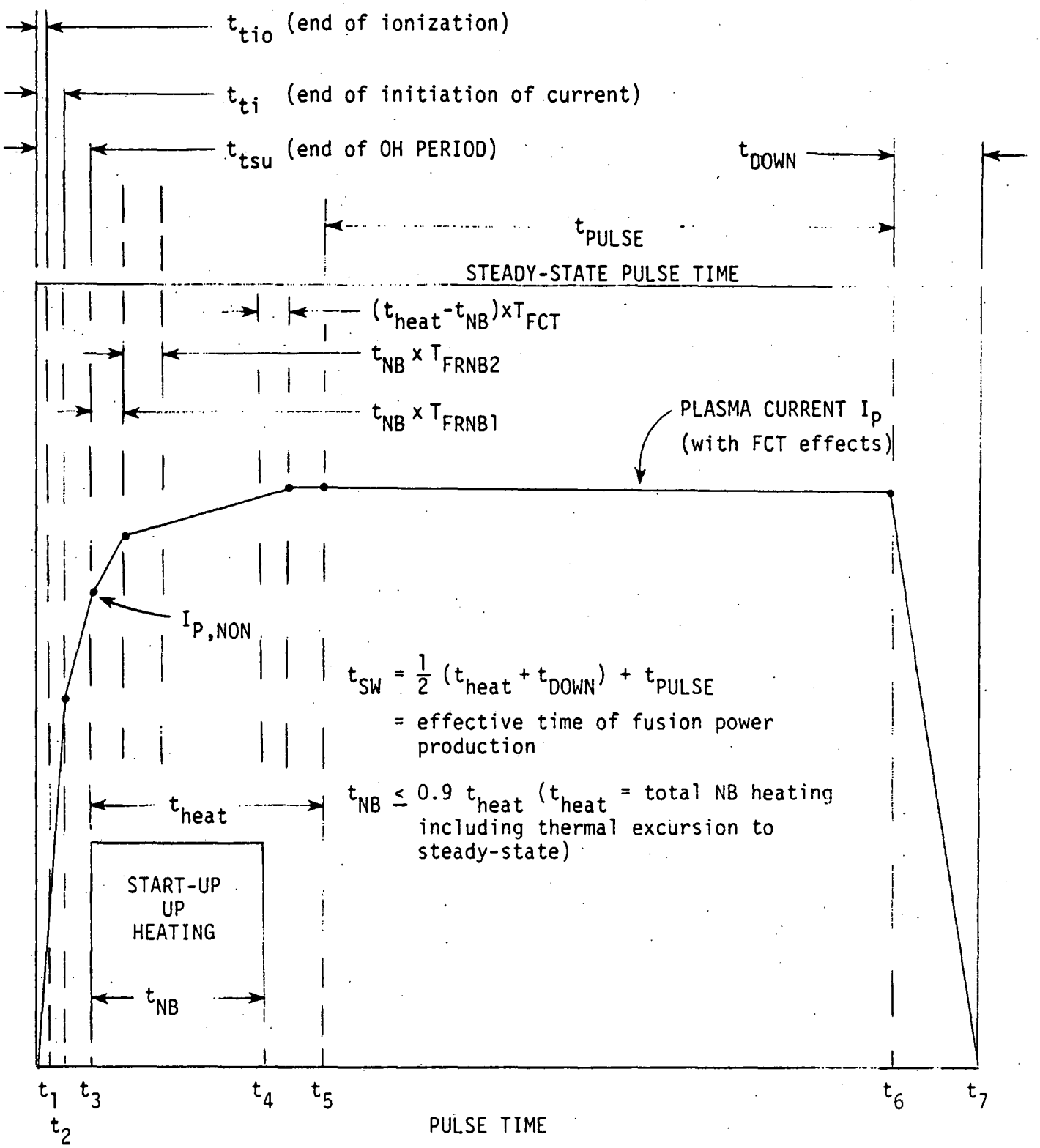

Figure 2-7. Plasma Pulse Behavior as a Function of Pulse Time (see Figure 2-8). The Various Times are Associated with the Input Data as Shown in Table 5-2.

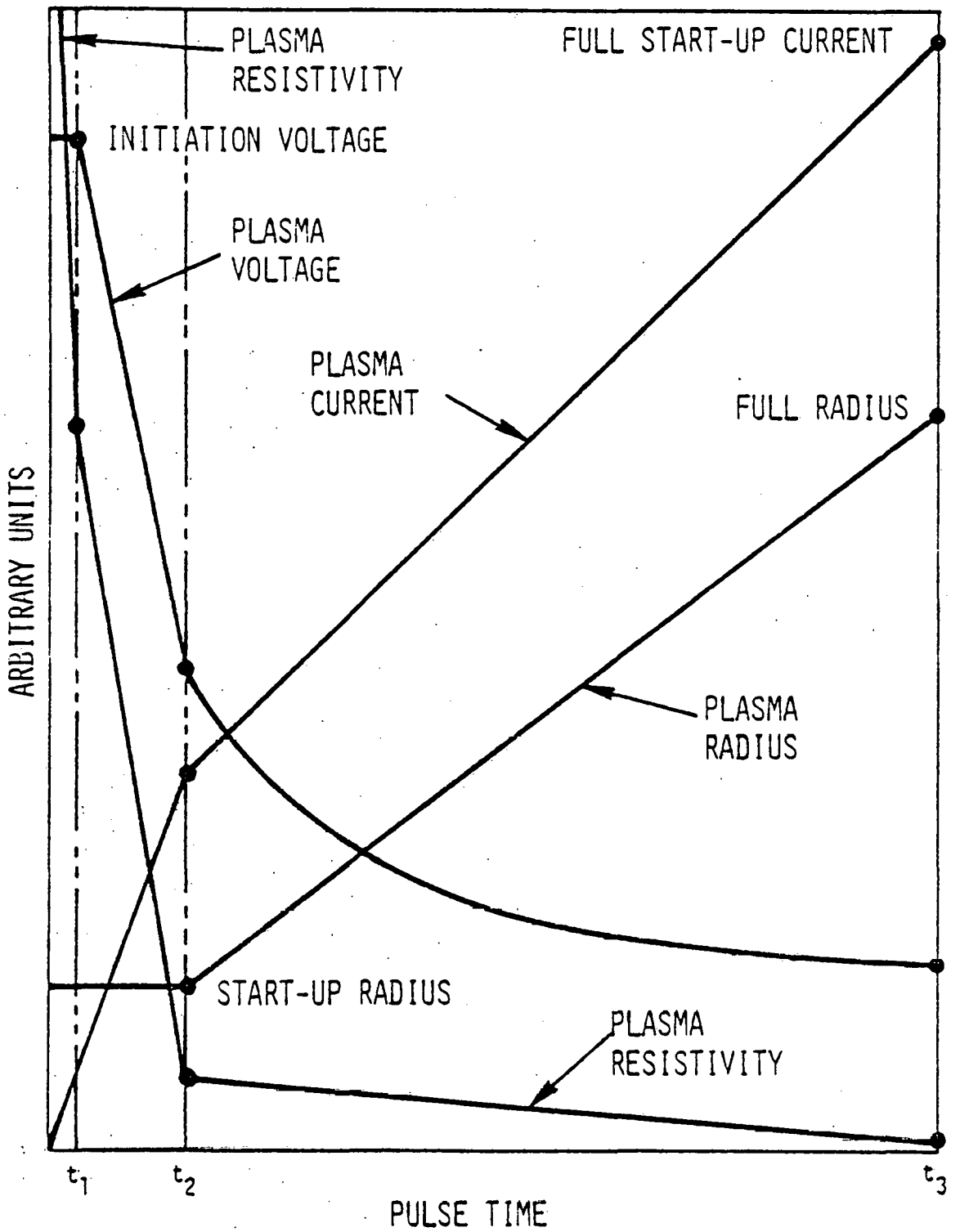

Figure 2-8. Plasma Start-Up Calculation in COAST.

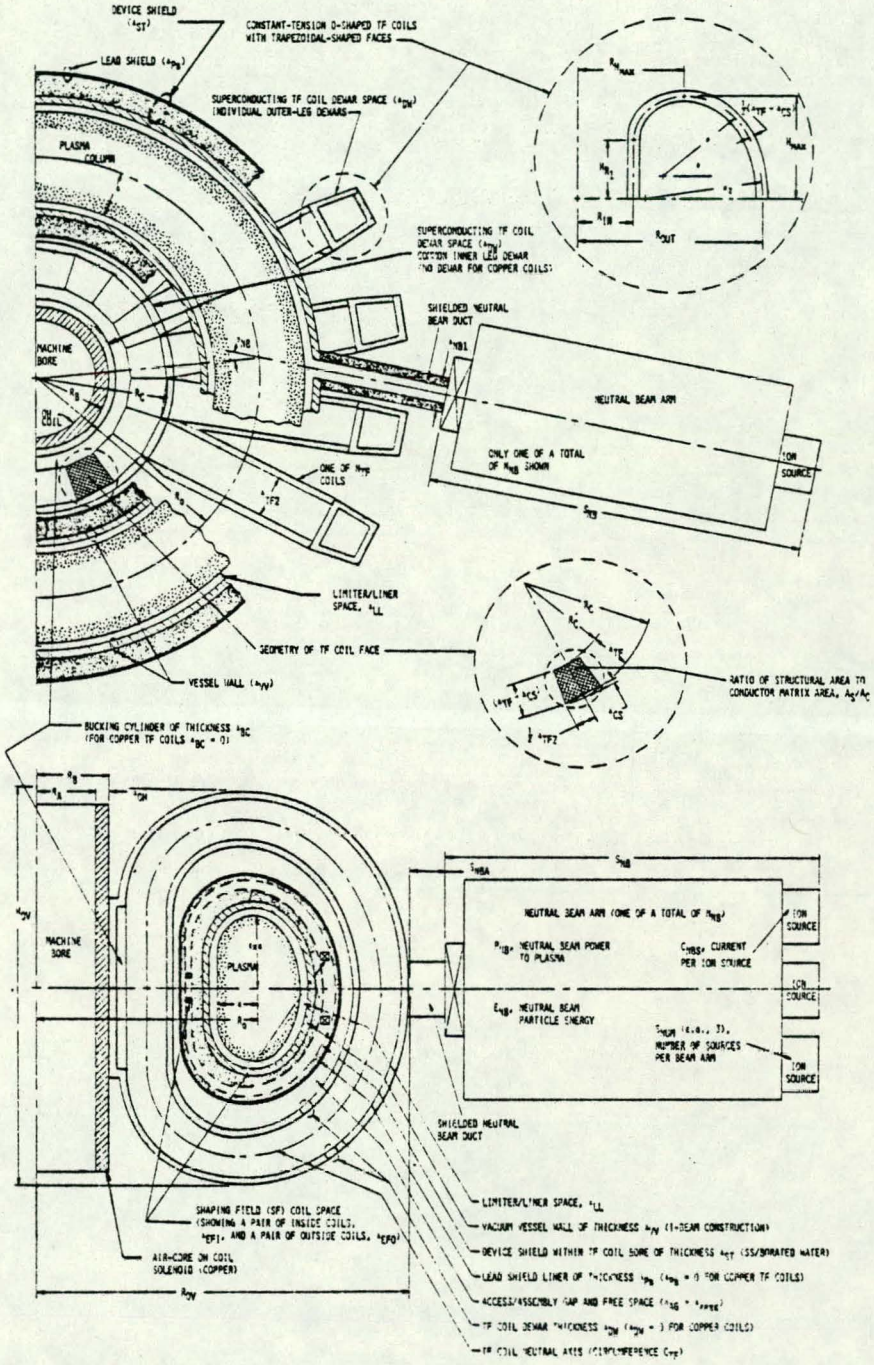

Figure 2-9. Detailed Illustration of a Tokamak (TNS) with a Standard-D TF Coil, PF Coils within TF Bore, PF Coils all Normal Cu, no Blanket or Divertor.

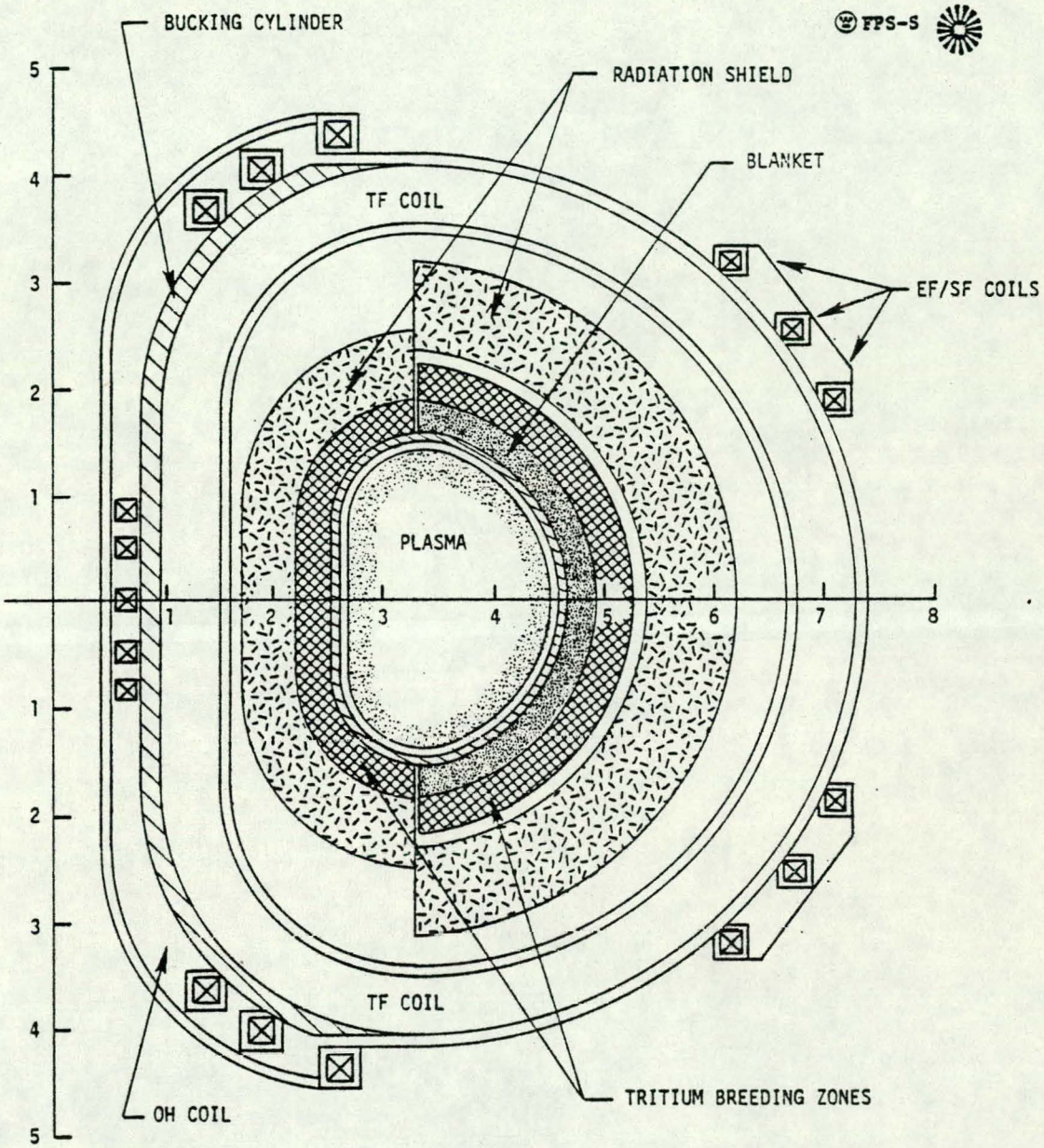

Figure 2-10. Illustration of a Tokamak with a Blanket on the Outer Half of the Vacuum Vessel and all S/C Coils with all PF Coils Outside TF Coil Bore.

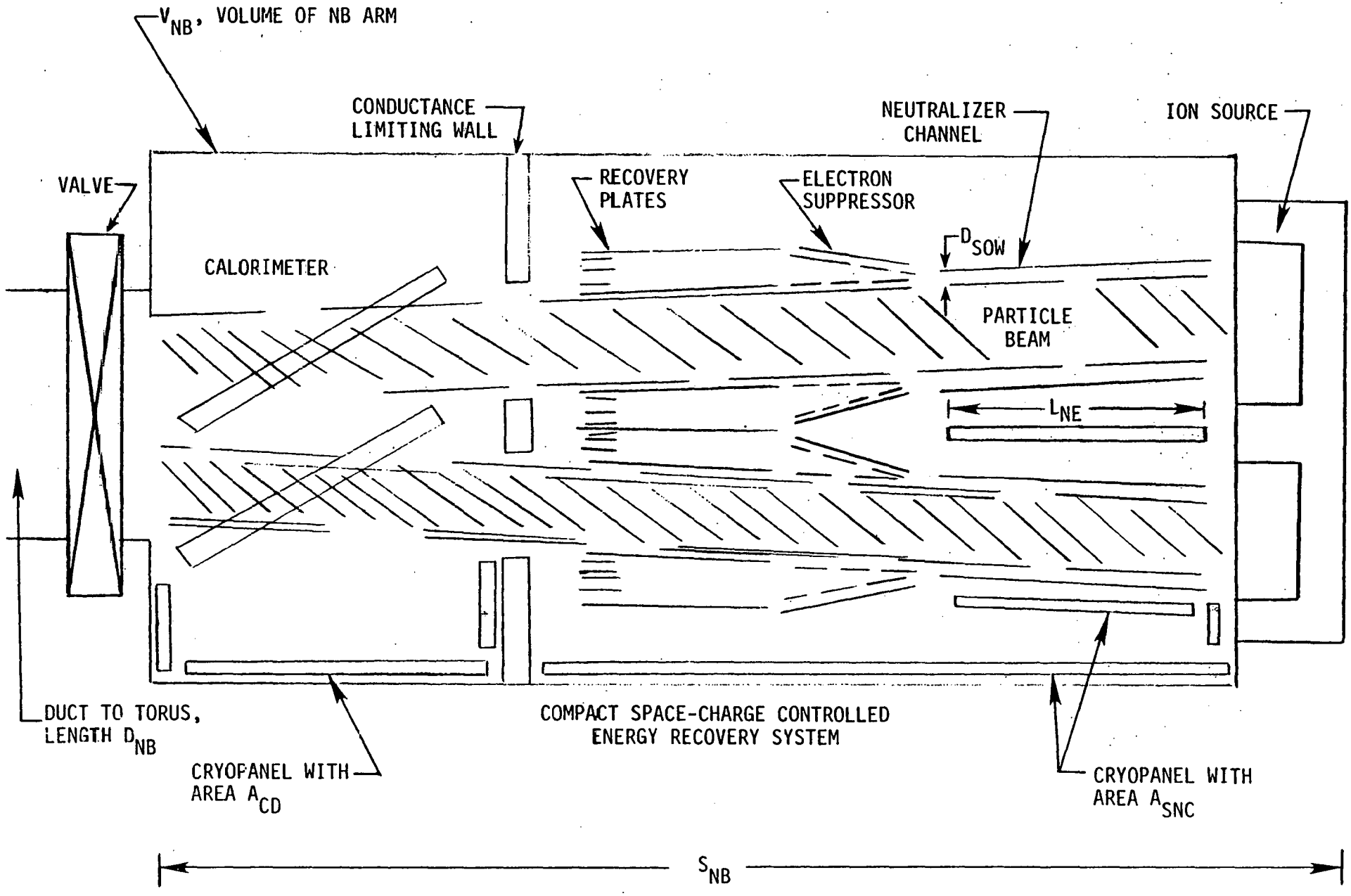

Figure 2-11. NB Injector Arm Geometry (The Number of Sources is Optimal. Two are Shown for Illustration Only).

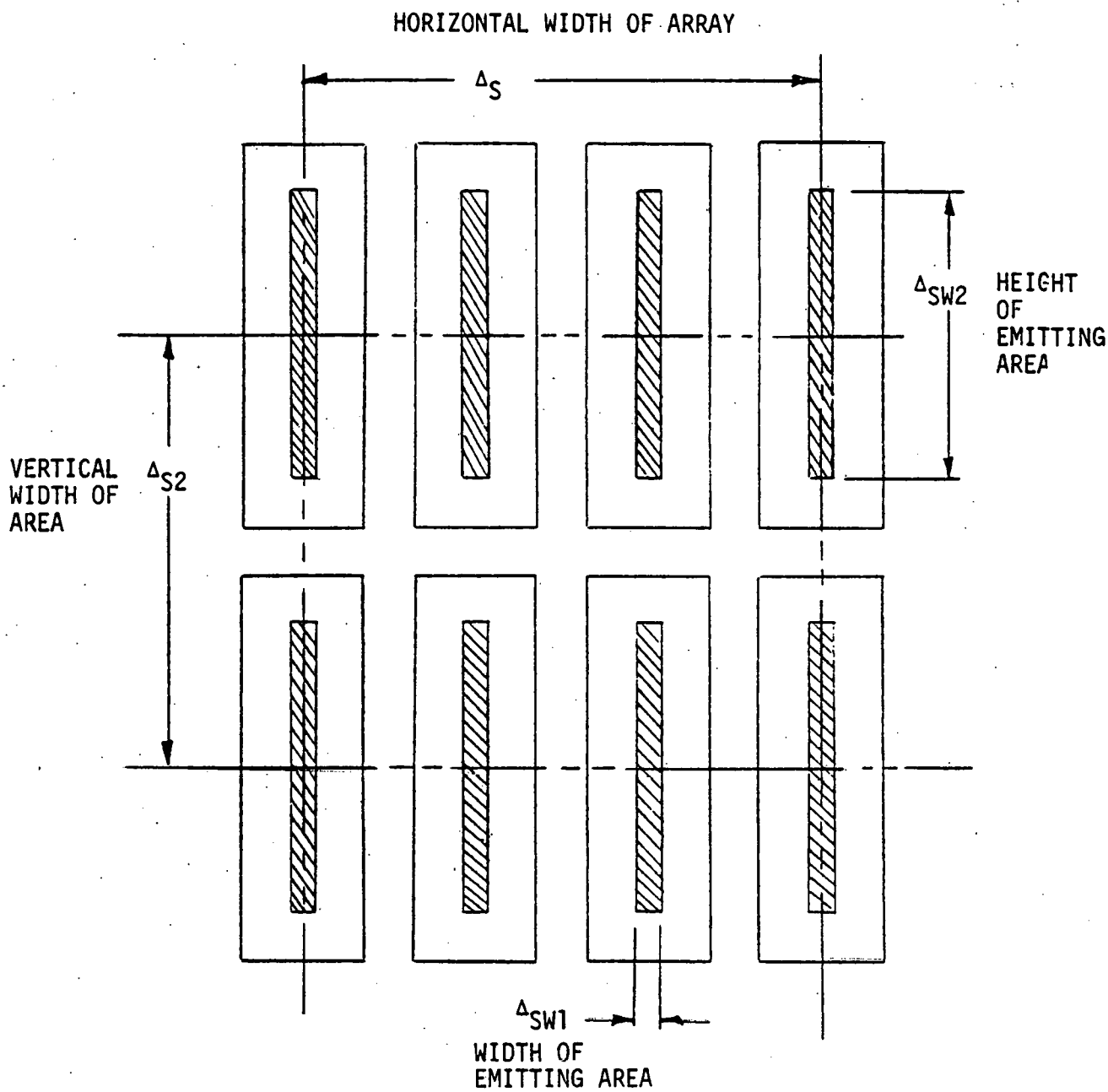

Figure 2-12. NB Injector Arm Source Geometry. The Number of Sources and Their Arrangement in Rows and Columns are set by Input Design Detail (see Figure 2-13 for Another Example).

I_{IS} = 56 A

N_{IS} = 3

Δ_{SW1} = 0.1 m

Δ_{SW2} = 0.4 m

Δ_S = 1.44 m - 0.1 m = 1.34 m

Δ_{S2} = 0

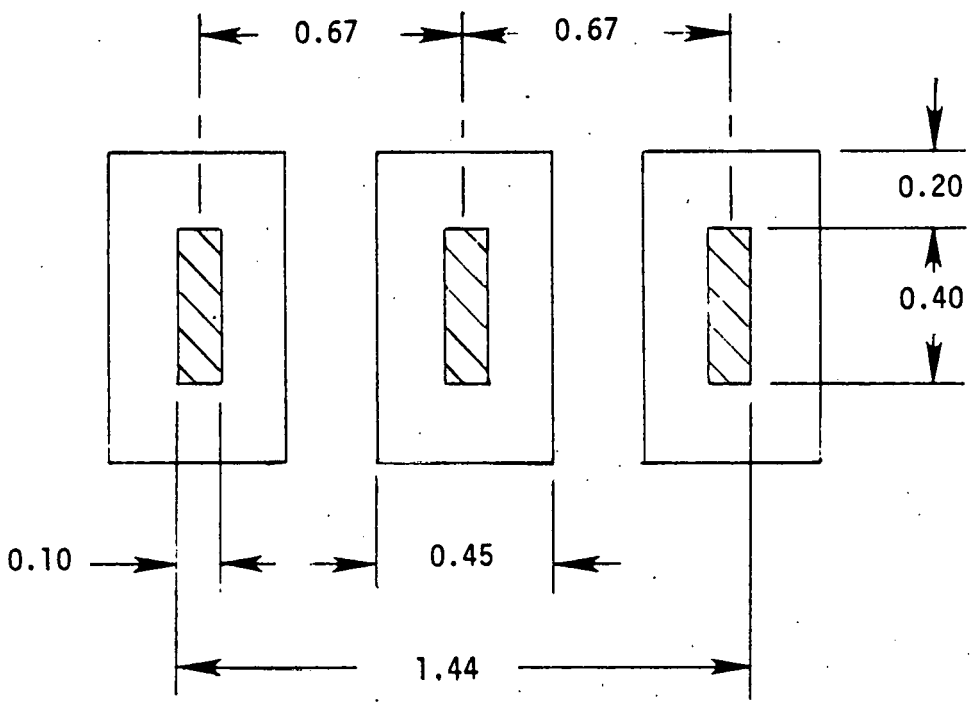

Figure 2-13. NB Injector Arm Source Geometry and Data for TFTR.

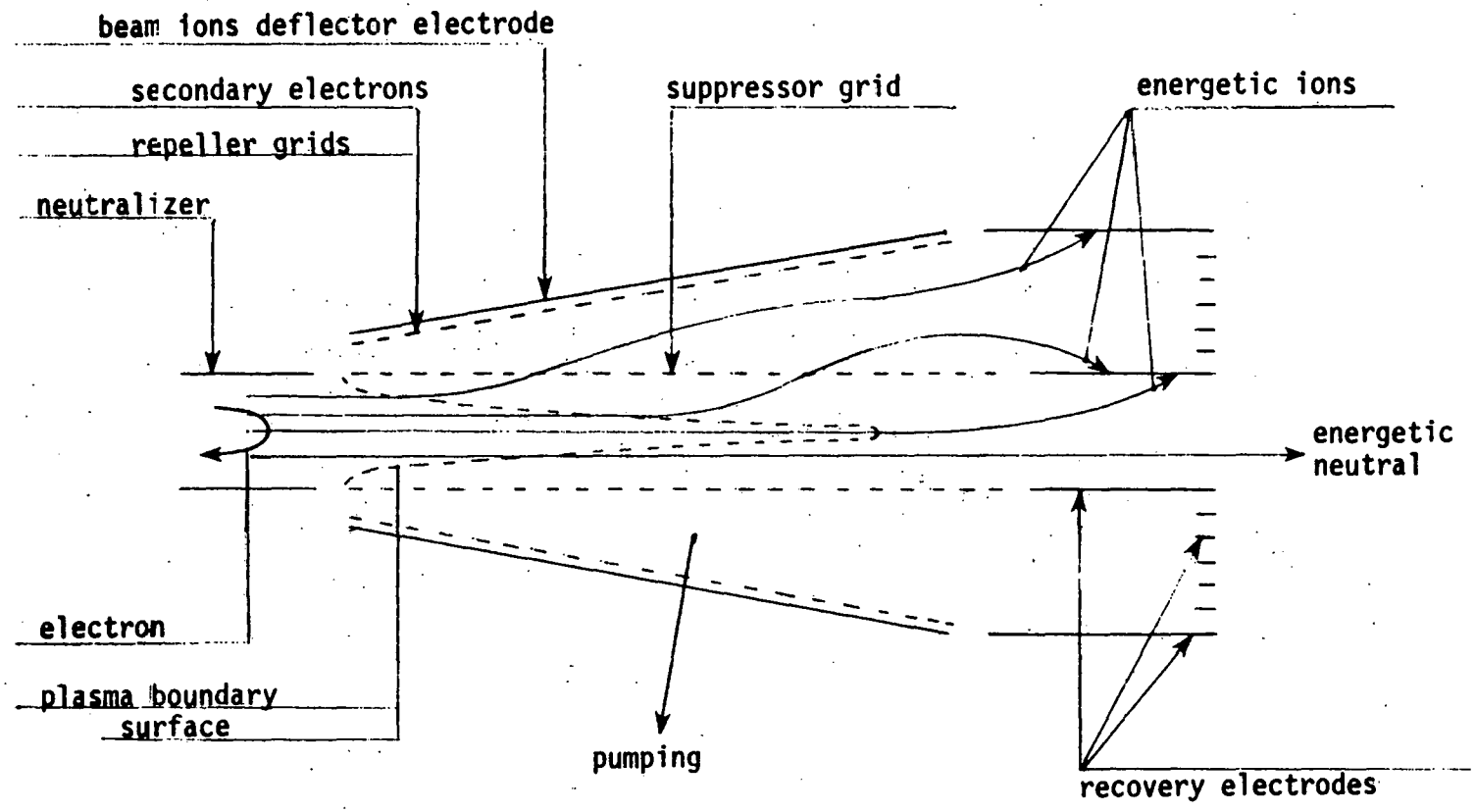

Figure 2-14. Geometry Associated with the Compact Space-Charge Controlled Ion Collector and/or Energy Recovery System for the Neutral Beam Injection System (see Reference 2).

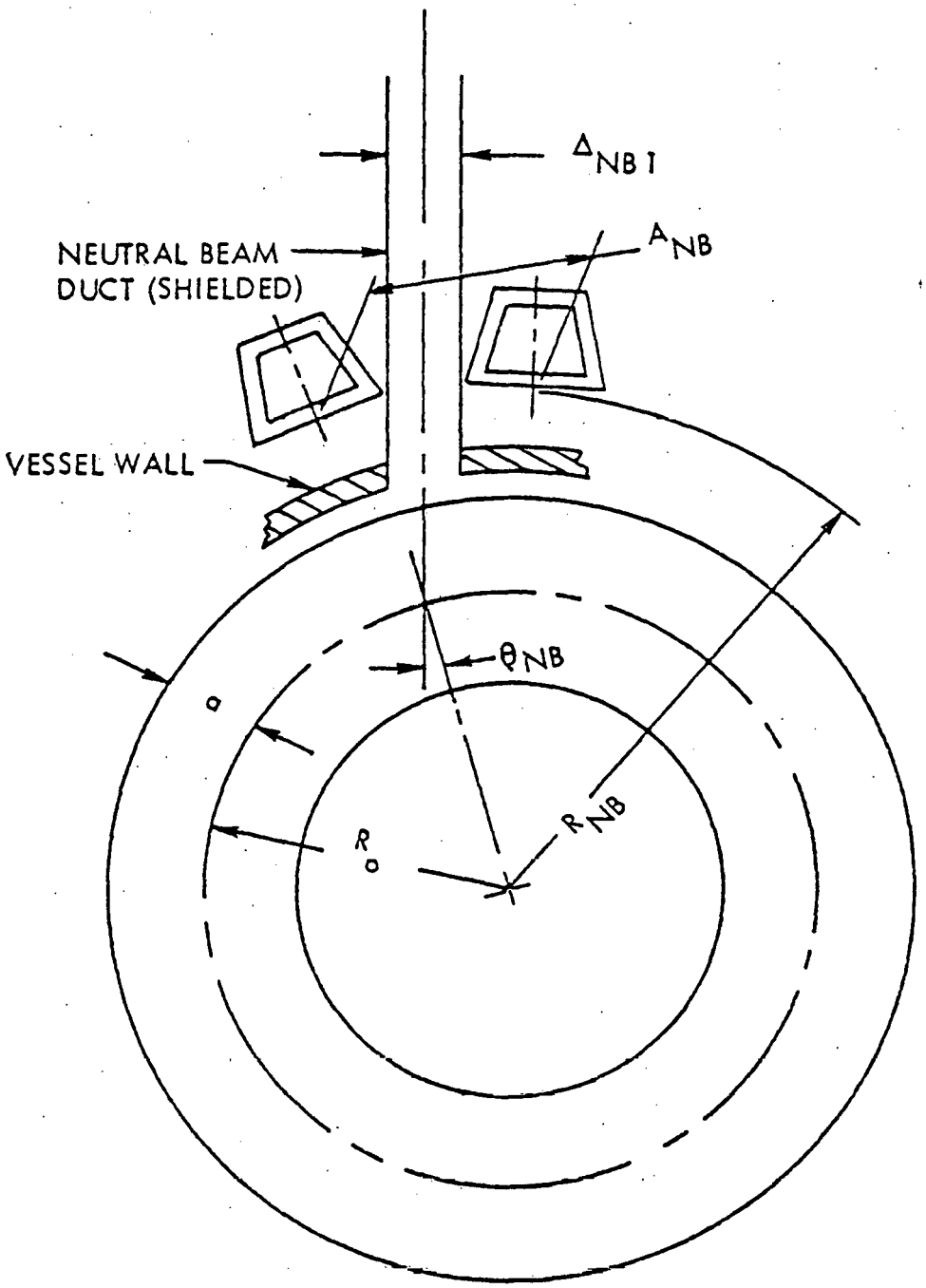

Figure 2-15. Geometrical Considerations for the Access Requirements Associated with the Neutral Beam Injector Arm Duct to the Vacuum Vessel.

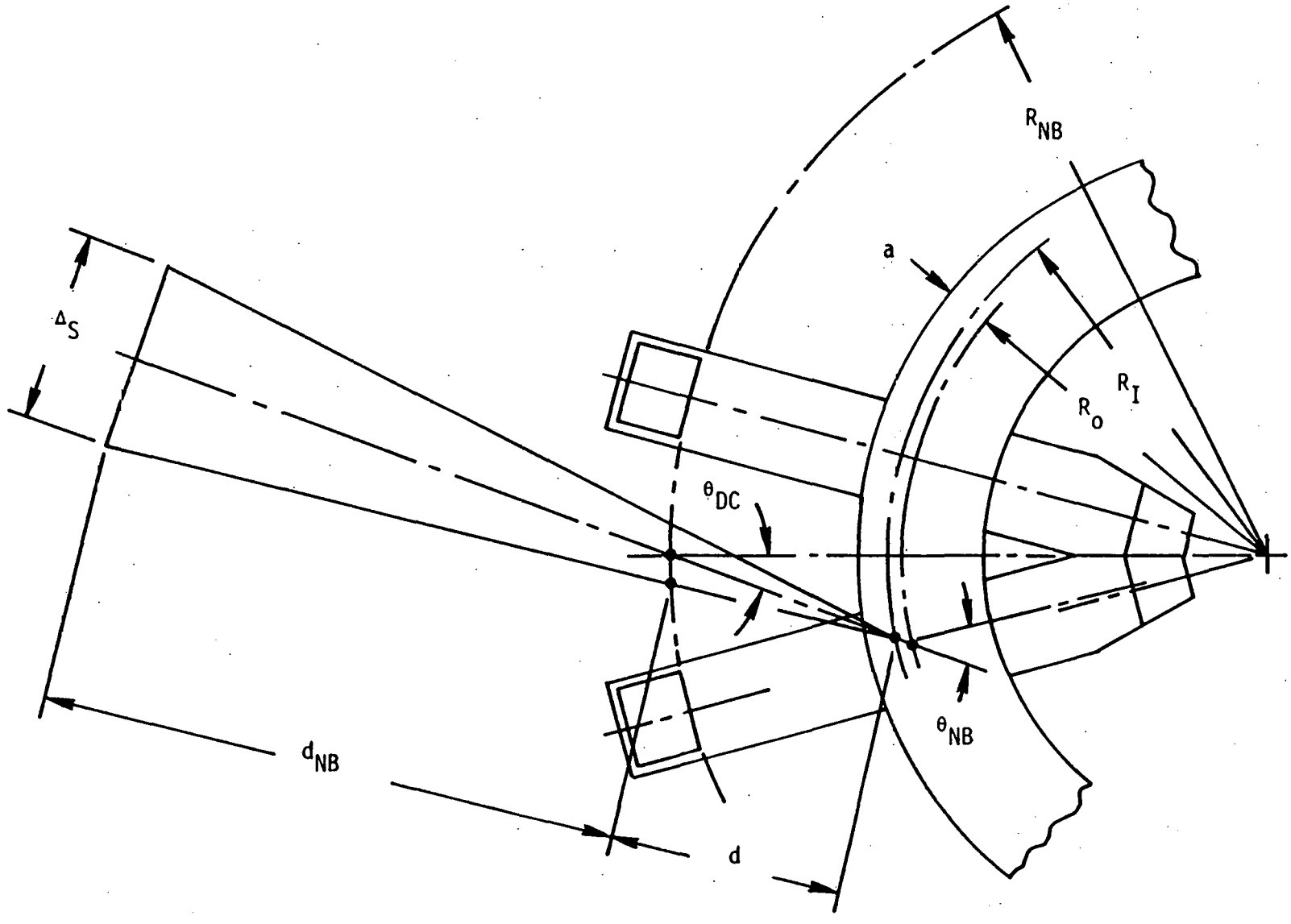

Figure 2-16. Detailed Schematic of NB Injection Geometry Considerations Showing the Aiming of the Sources.

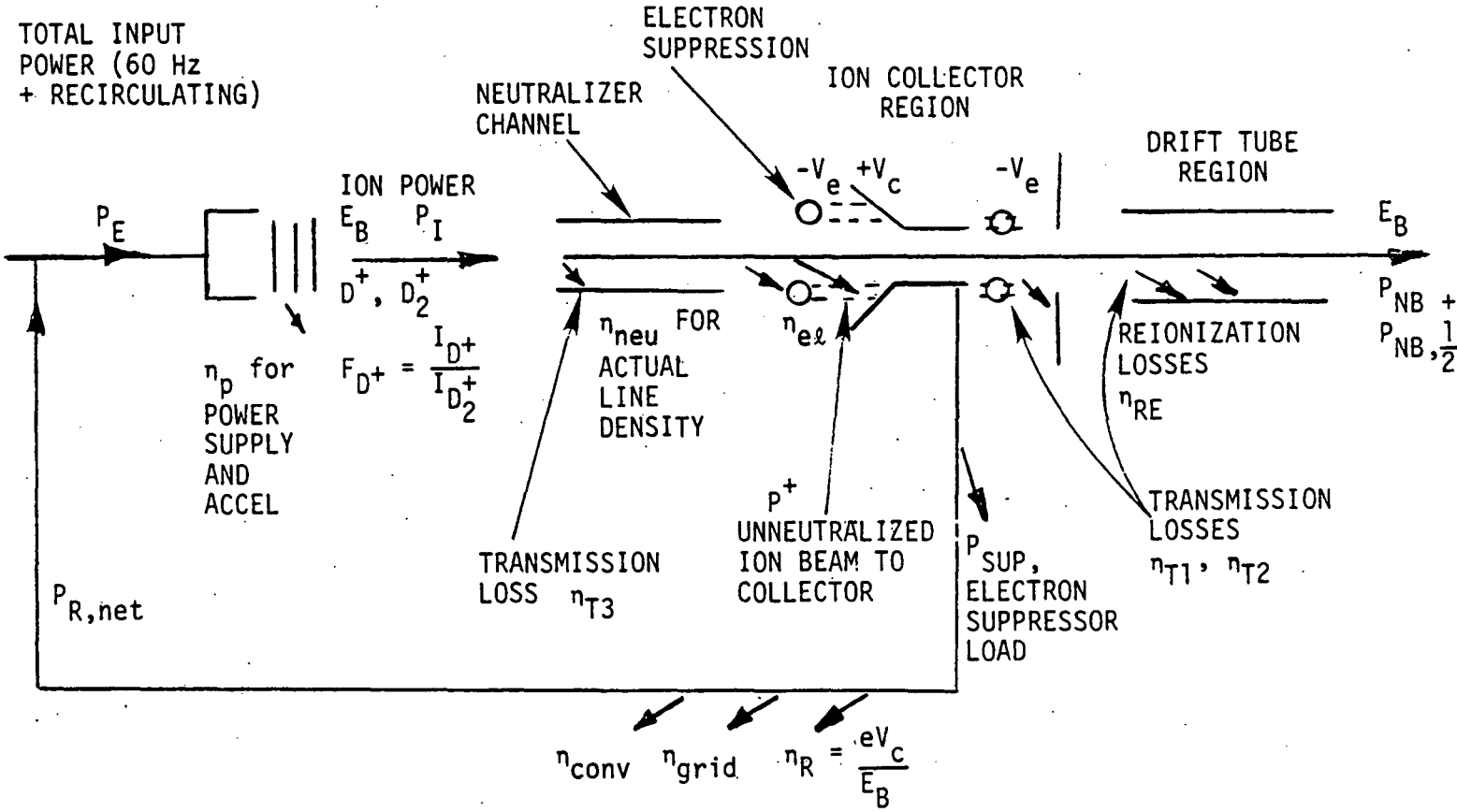

$$\frac{P_{NB}}{P_E} = \eta_p F_D \times \eta_{neu} \times [\Pi\, \eta_T] \times \eta_{e\ell} \times \eta_{RE}$$

TRANSMISSION LOSSES

ELECTRON SUPPRESSION LOSSES

IF RECOVERY IS ASSUMED

$$P_E \rightarrow P_E - P_{R,net}$$

$$P_{R,net}/P_E \doteq (1 - \eta'_{neu}) \times \eta_T \times \eta_{e\ell} \times \left[\eta_R \times \eta_{grid} \times \eta_{conv} - \underbrace{(1 - \eta_{grid}) \times \frac{eV_e}{E_B}}_{\text{LOSSES DUE TO GRID GEOMETRY}}\right]$$

Figure 2-17. Schematic Diagram and Calculations for the Estimation of the Efficiency (Electrical Power to Injector Beam Power) Associated with NB Heating.

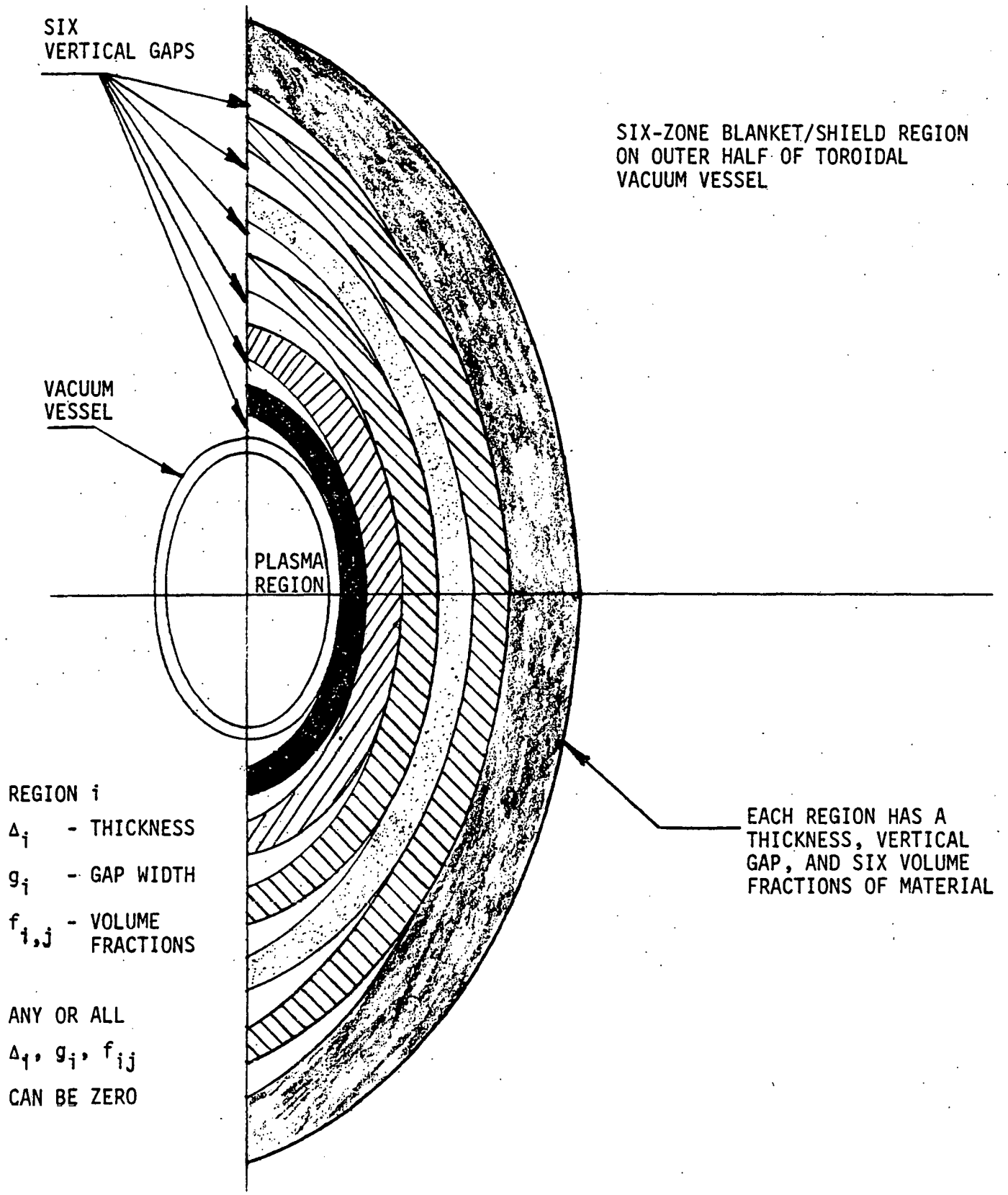

Figure 2-18. Blanket/Shield Assembly Geometry for the Region on the Outer Half of the Vacuum Vessel.

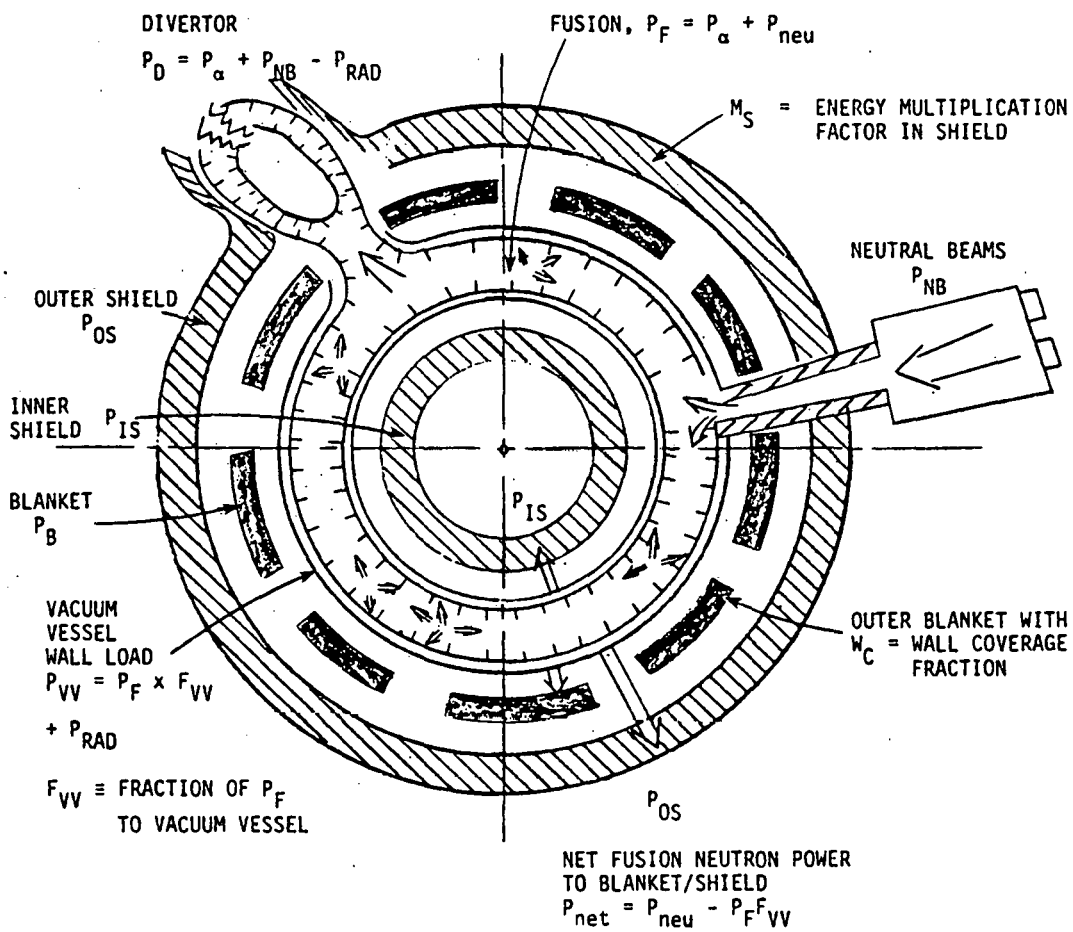

Figure 2-19. Schematic of the Heat Flow Model in COAST. Calculational Procedures to Obtain Magnitudes During a Plasma Burn are Shown.

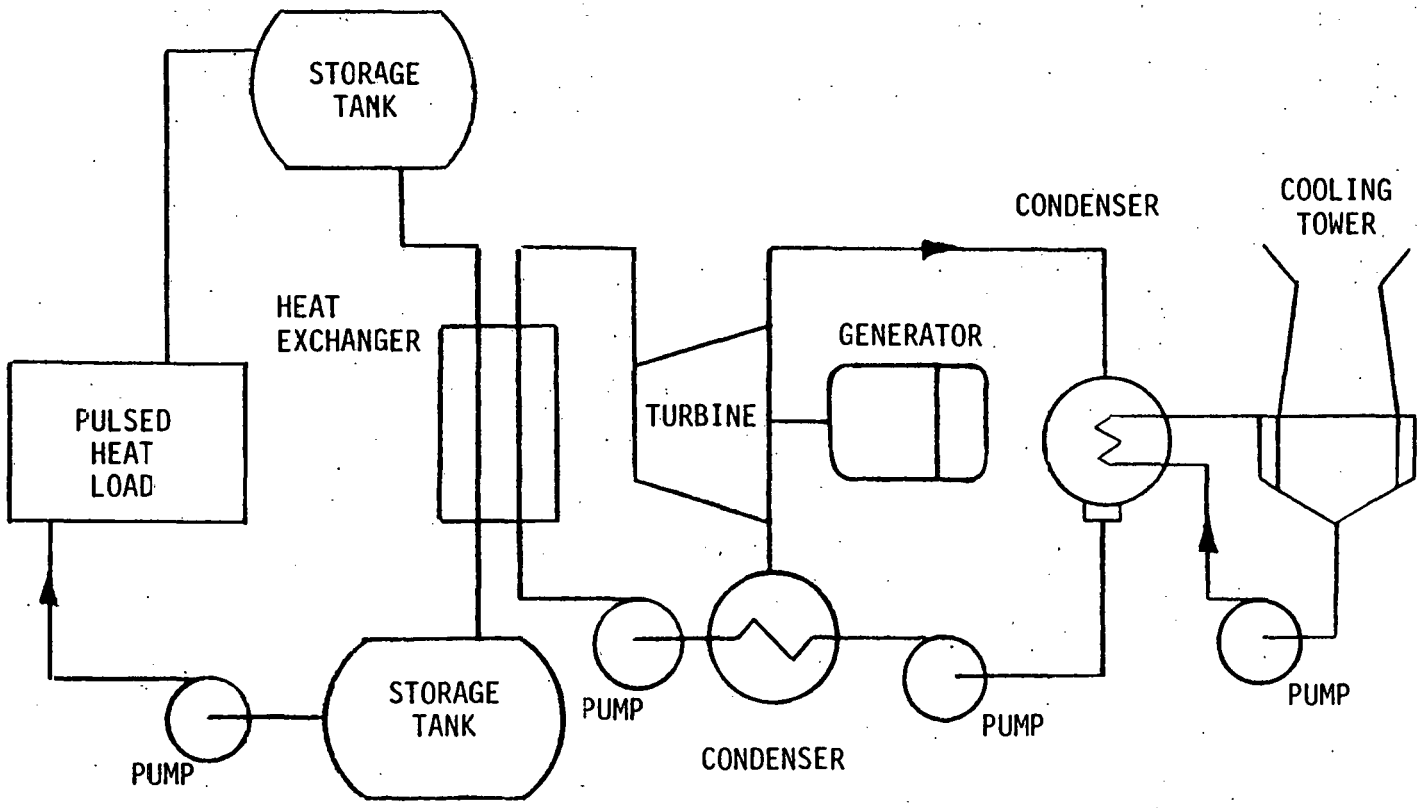

Figure 2-20. Thermal to Electrical Power Conversion System

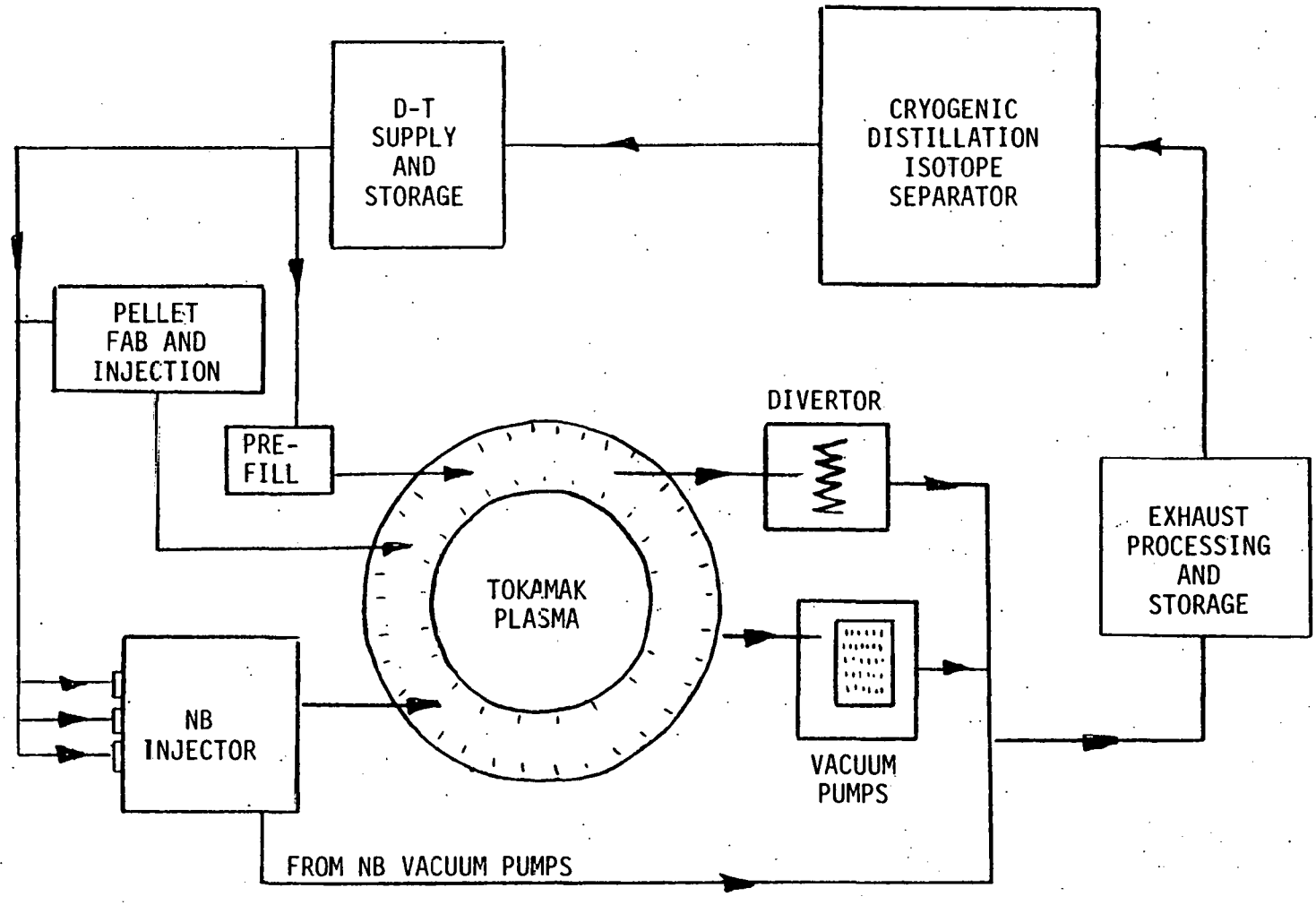

THE DIAGRAM IS GENERALIZED FOR EITHER OF TWO SYSTEMS (BATCH OR CONTINUOUS). THE SELECTION OF THE SYSTEM IS DEPENDENT ON ENGINEERING ASSUMPTIONS AND OPERATING SCENARIO SELECTED BY COAST USER (SEE REFERENCE 3).

Figure 2-21. Fusile Fuel Systems Schematic.

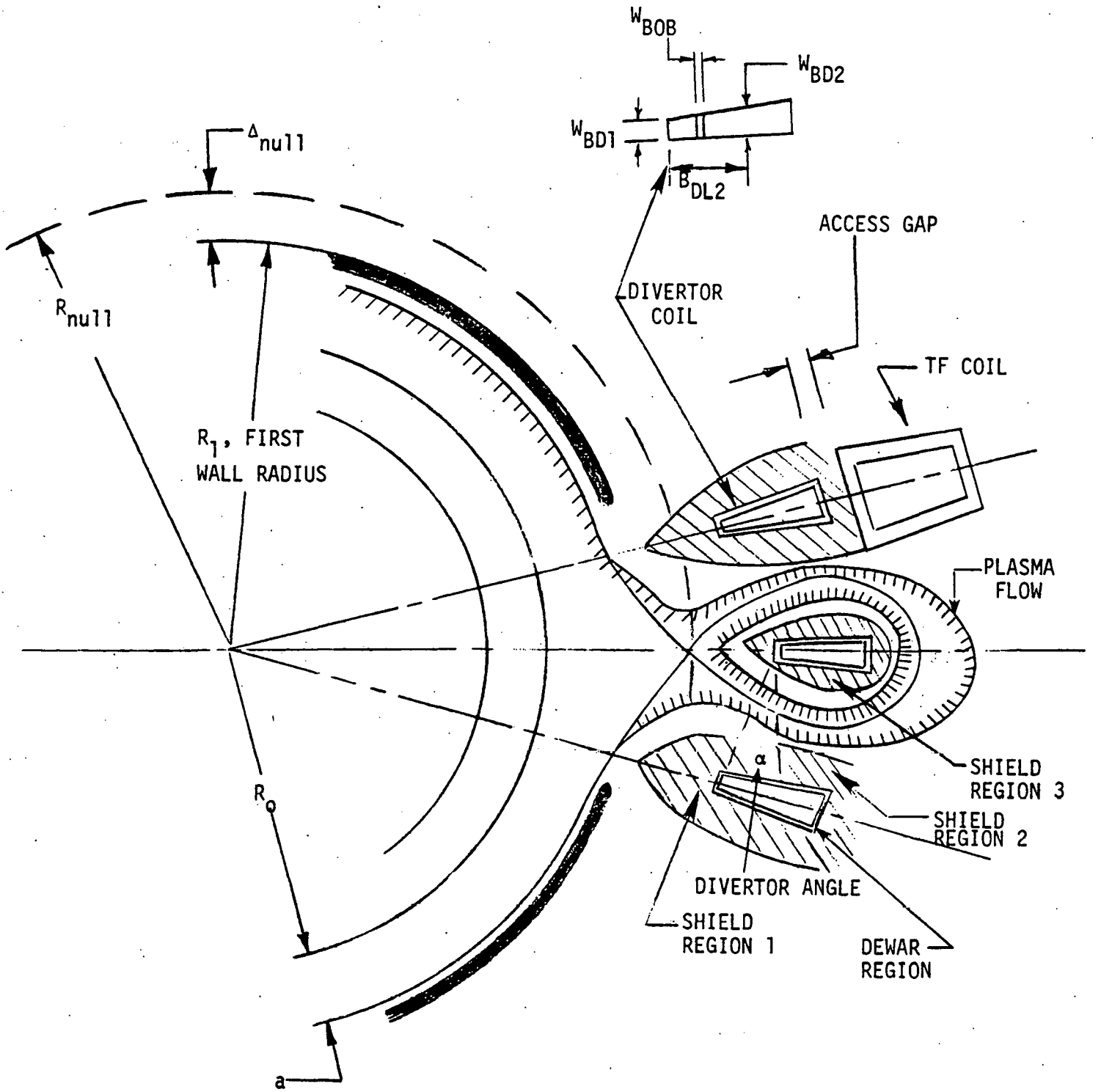

Figure 2-22. Compact Bundle Divertor Geometrical Considerations in COAST (see Ref. 4).

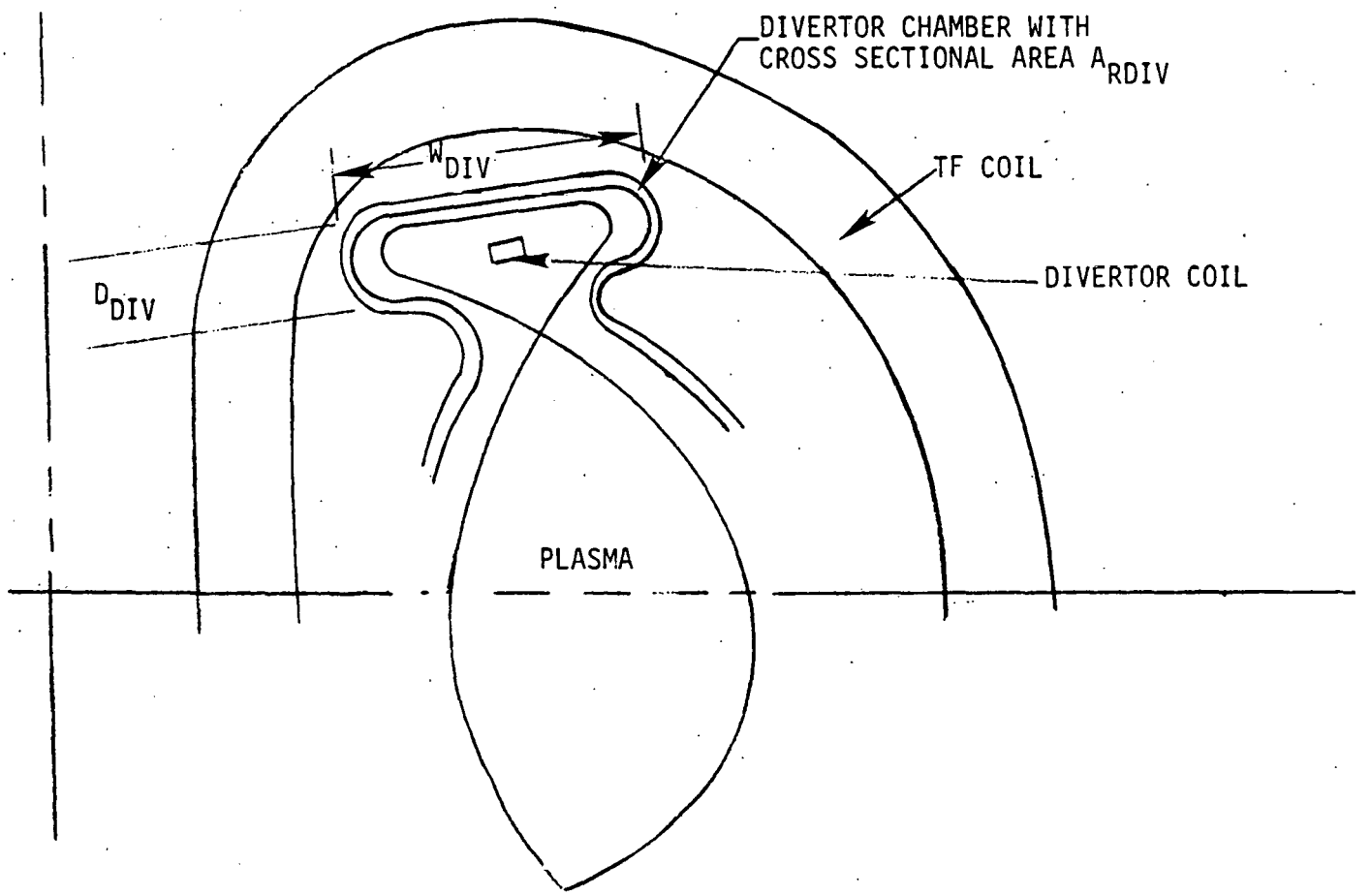

Figure 2-23. Compact Poloidal Divertor Geometrical Considerations in COAST (see Ref. 5).

COIL TECHNOLOGIES

1) NORMAL COPPER
2) S/C NbTi
3) S/C Nb_3Sn
4) Cu/NbTi "HYBRID"

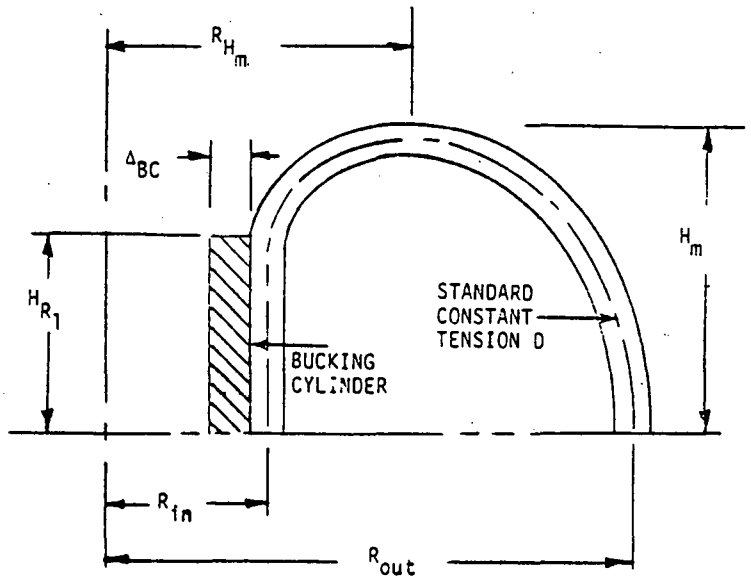

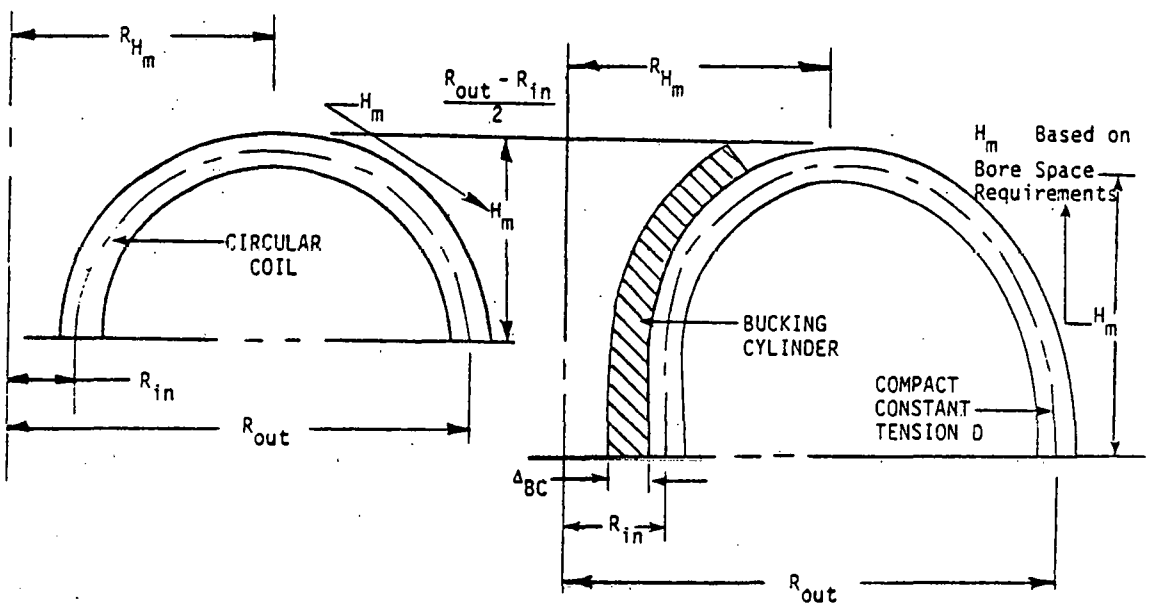

NOTE: $H_m = H_{max} + 1/2\ \Delta_{TF}$

Figure 2-24. Schematics of Each of the Three TF Coil Geometries with a List of the Four Coil Technologies Modeled in COAST (see References 6 and 7).

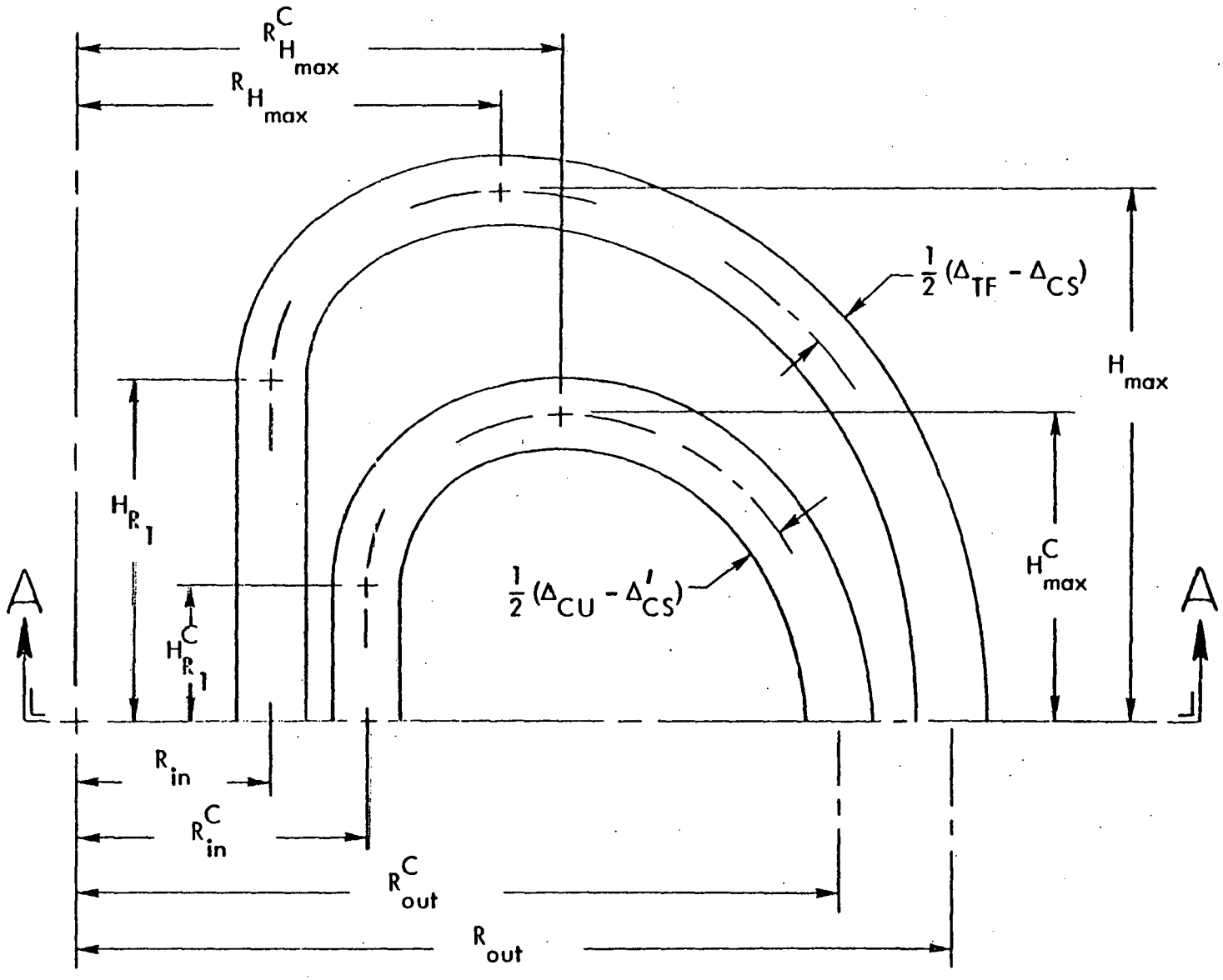

Figure 2-25. Detail Schematic of the Cu/NbTi "HYBRID" TF Coil Geometry Option (TNS-5).

N_{TURNS} = TURNS PER COIL

N_{SLOTS} = CONDUCTOR-TURNS PER COIL
= COOLANT CONNECTION PER COIL
= N_{TURNS}/TF_{TPB}

CONDUCTOR SPECIFICATIONS

C_D = CURRENT DENSITY OVER METAL, COOLANT, AND INSULATION

P_F = RATIO OF COOLANT PLUS INSULATION TO TOTAL CONDUCTOR AREA

TF_{CUR} = CURRENT PER CONDUCTOR

(CONDUCTOR AREA = TF_{CUR}/C_D)

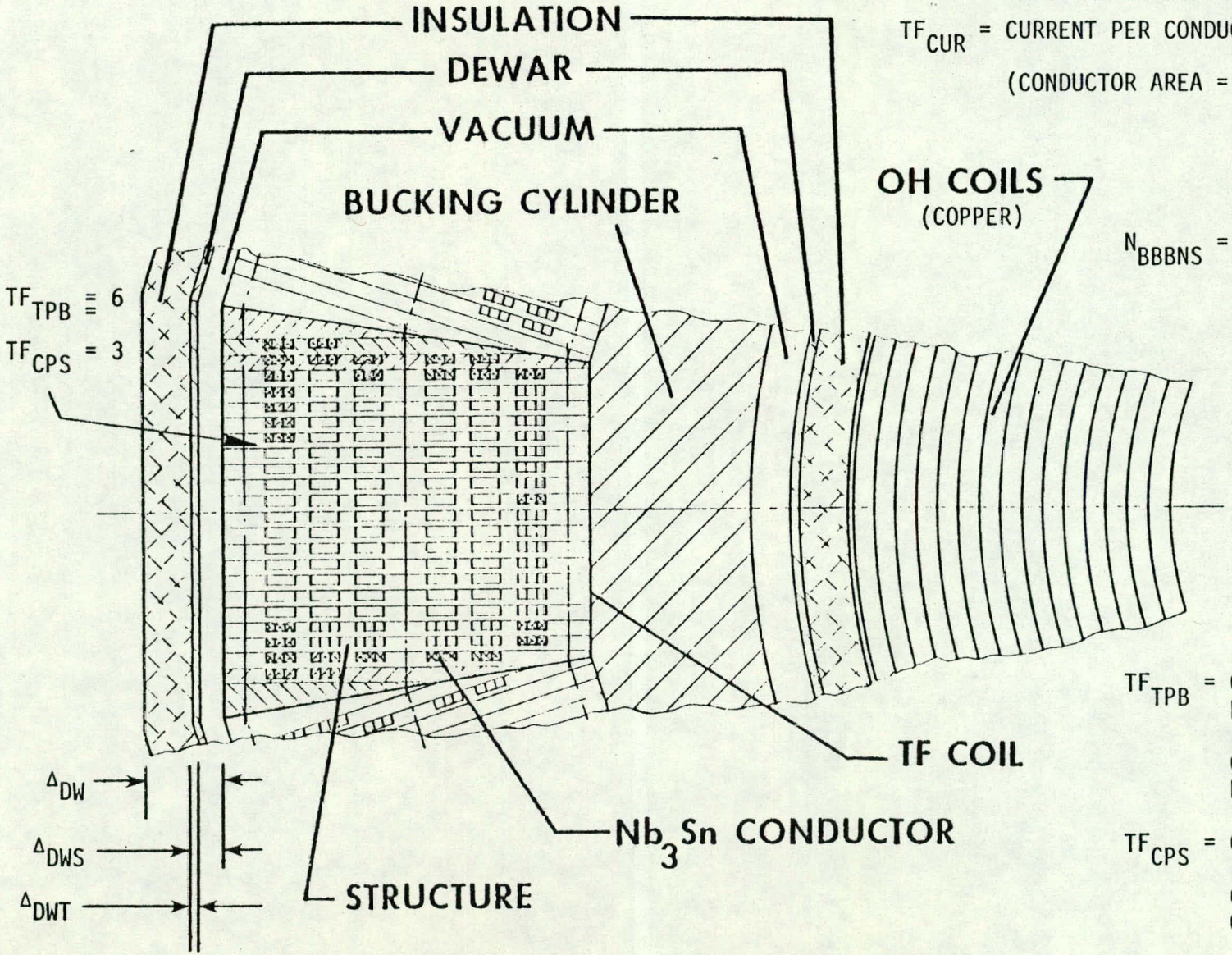

N_{BBBNS} = BOBBINS (PLATES) PER COIL = $\frac{N_{TURNS}}{TF_{TPB} \times TF_{CPS}}$

TF_{TPB} = CONDUCTOR TURNS PER BOBBIN (PLATE) (# OF PARALLEL COOLANT CHANNELS PER PLATE)

TF_{CPS} = CONDUCTOR PER SLOT (# INDIVIDUAL CONDUCTORS PER GROUPING)

Figure 2-26. TF/OH Coil Cross Section for S/C Nb_3Sn TF Coil and a Cu OH Coil.

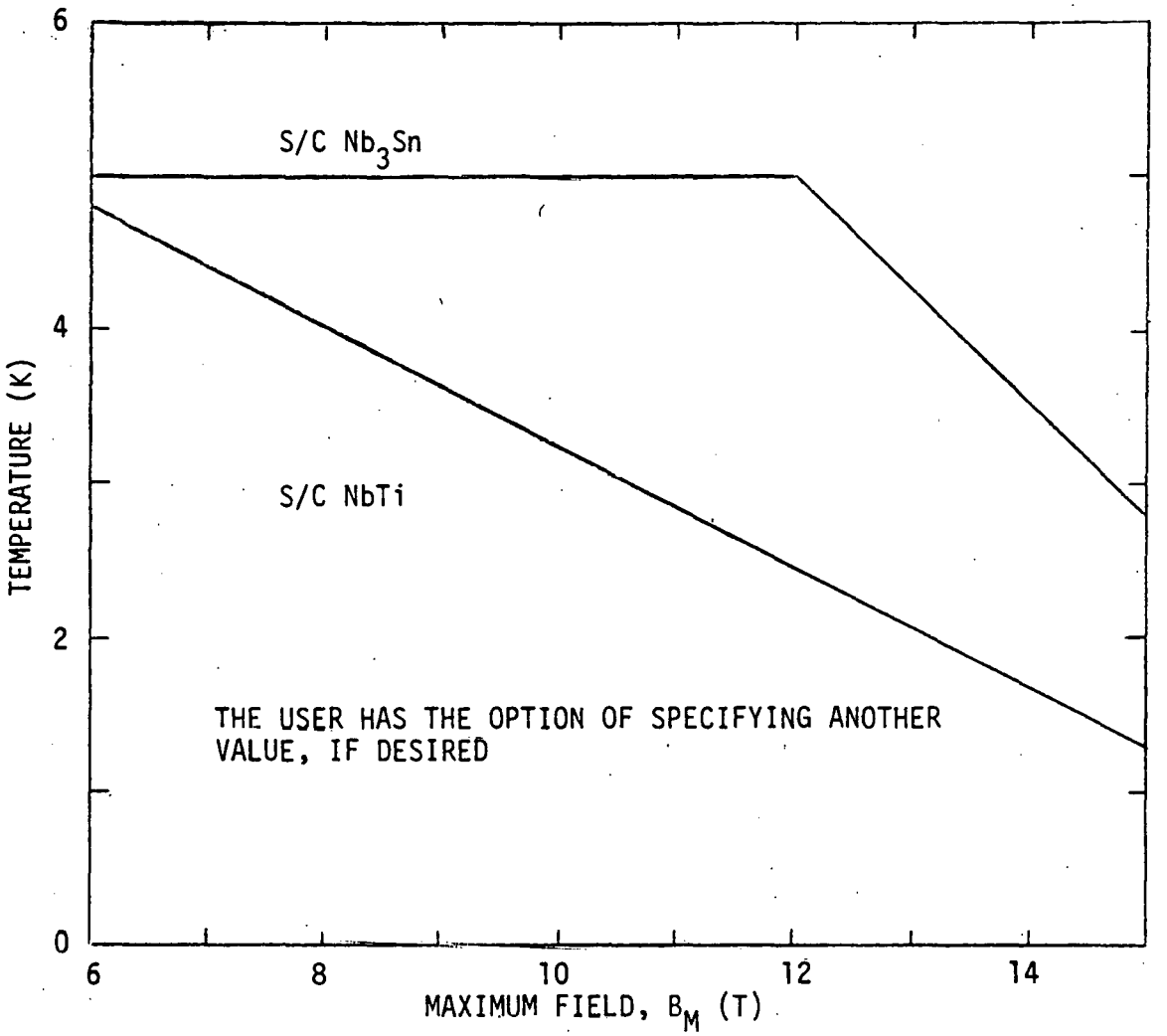

Figure 2-27. S/C Conductor Temperature as a Function of Maximum B-Field at the Conductor Modeled in COAST.

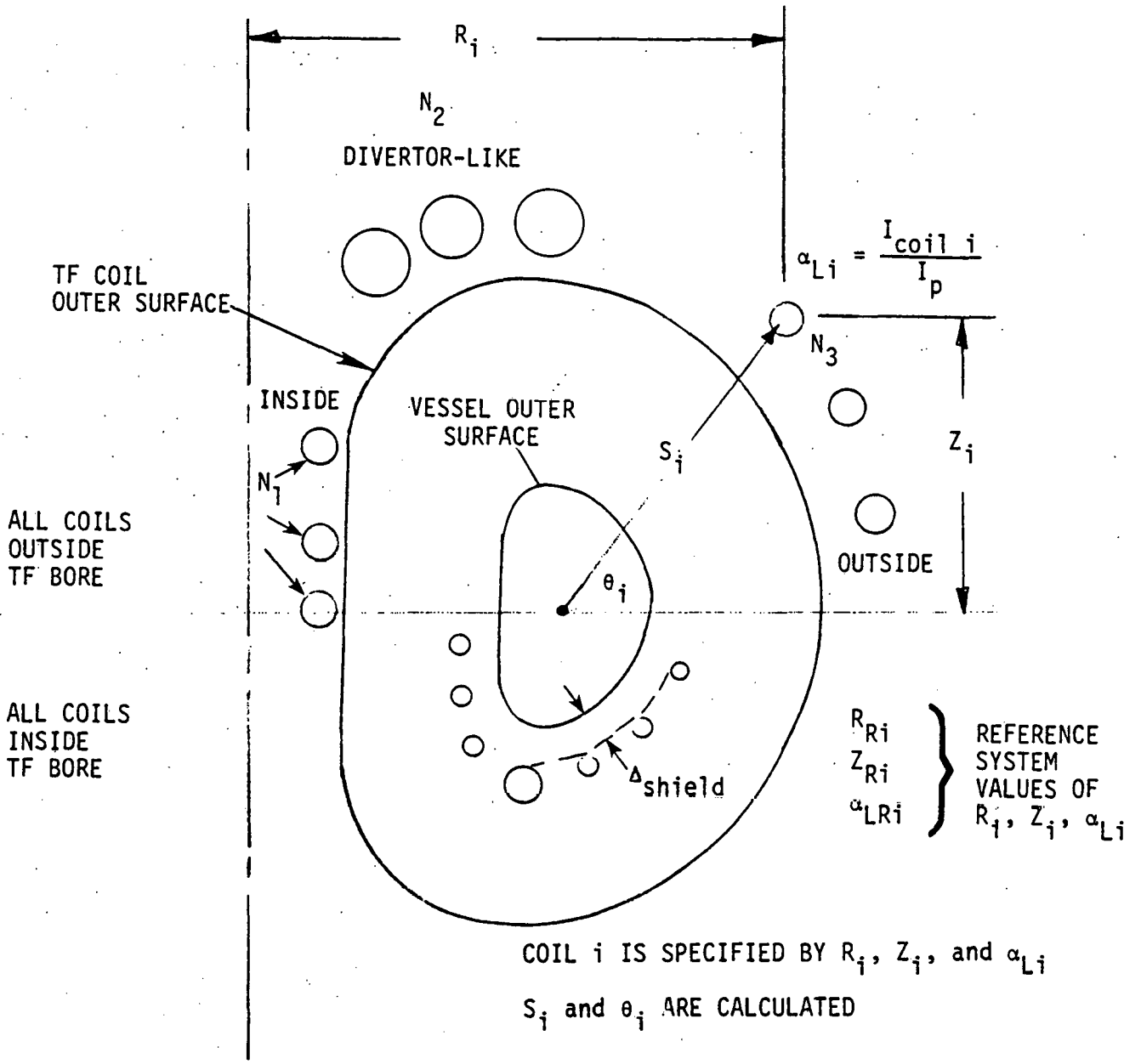

IN THE UPPER HALF INDIVIDUAL EF COILS ARE OUTSIDE THE TF BORE. IN THE LOWER HALF INDIVIDUAL EF COILS ARE LOCATED WITHIN THE TF BORE.

Figure 2-28. Two PF Coil Geometrical Configurations Modeled in COAST.

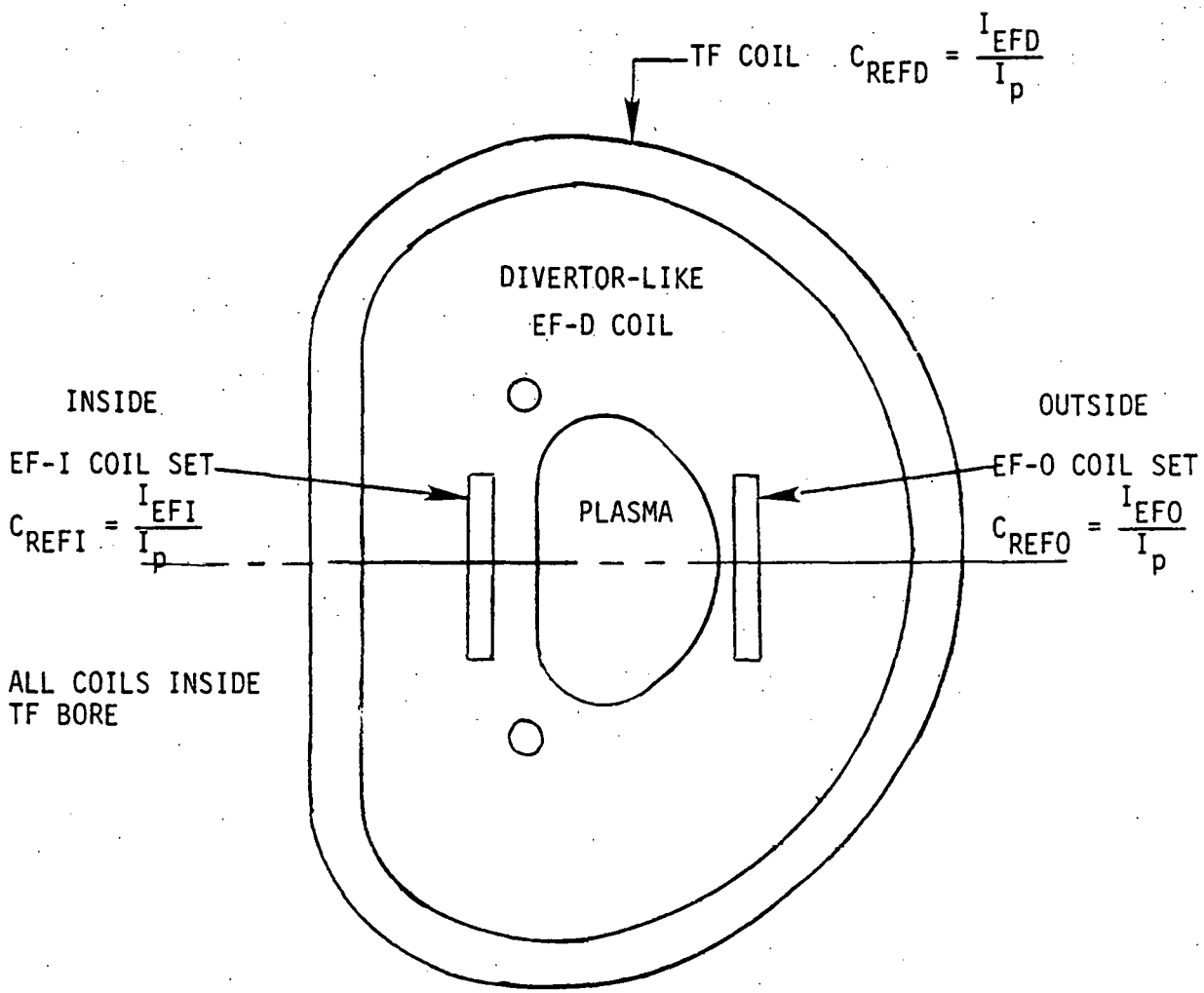

THE MODEL ALLOWS THE INSIDE AND OUTSIDE COILS TO BE GROUPED INTO A SHORT SOLENOID FOR PURPOSES OF CALCULATING THE INDUCTANCE MATRIX.

Figure 2-29. Schematic of a Geometrical Model Option for an EF Coil System with Coils Located Inside the TF Bore.

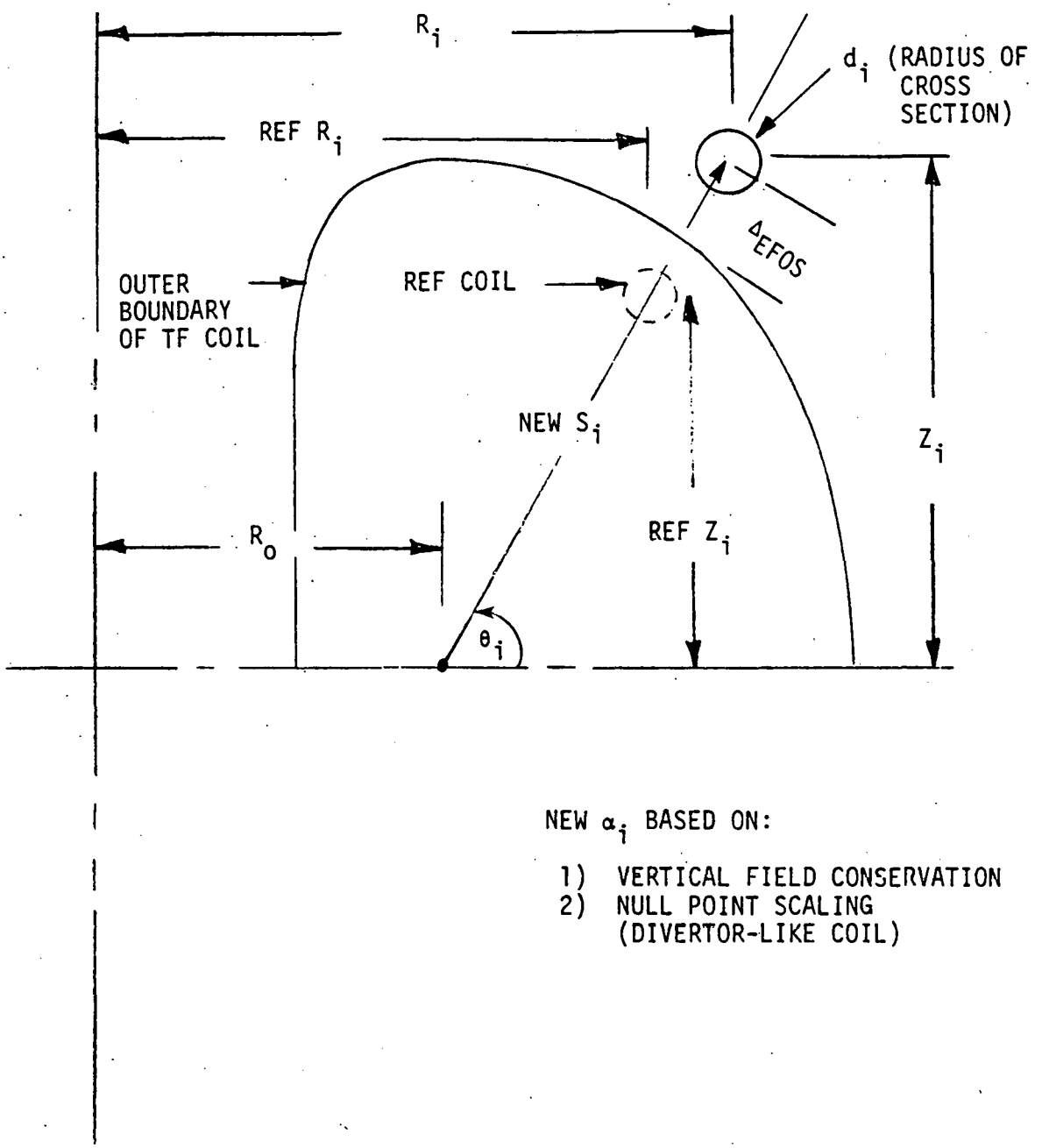

THE EXAMPLE IS FOR A COIL OUTSIDE THE TF BORE. SIMILAR ADJUSTMENTS ARE MADE FOR INSIDE EF COIL LOCATIONS. AN OPTION IN WHICH NO ADJUSTMENTS ARE MADE IS AVAILABLE. FOR COIL CURRENTS VARIOUS SCALING OPTIONS ARE AVAILABLE.

Figure 2-30. The EF Coil Locations are Adjusted from the Reference Locations Consistent with Sizing Changes.

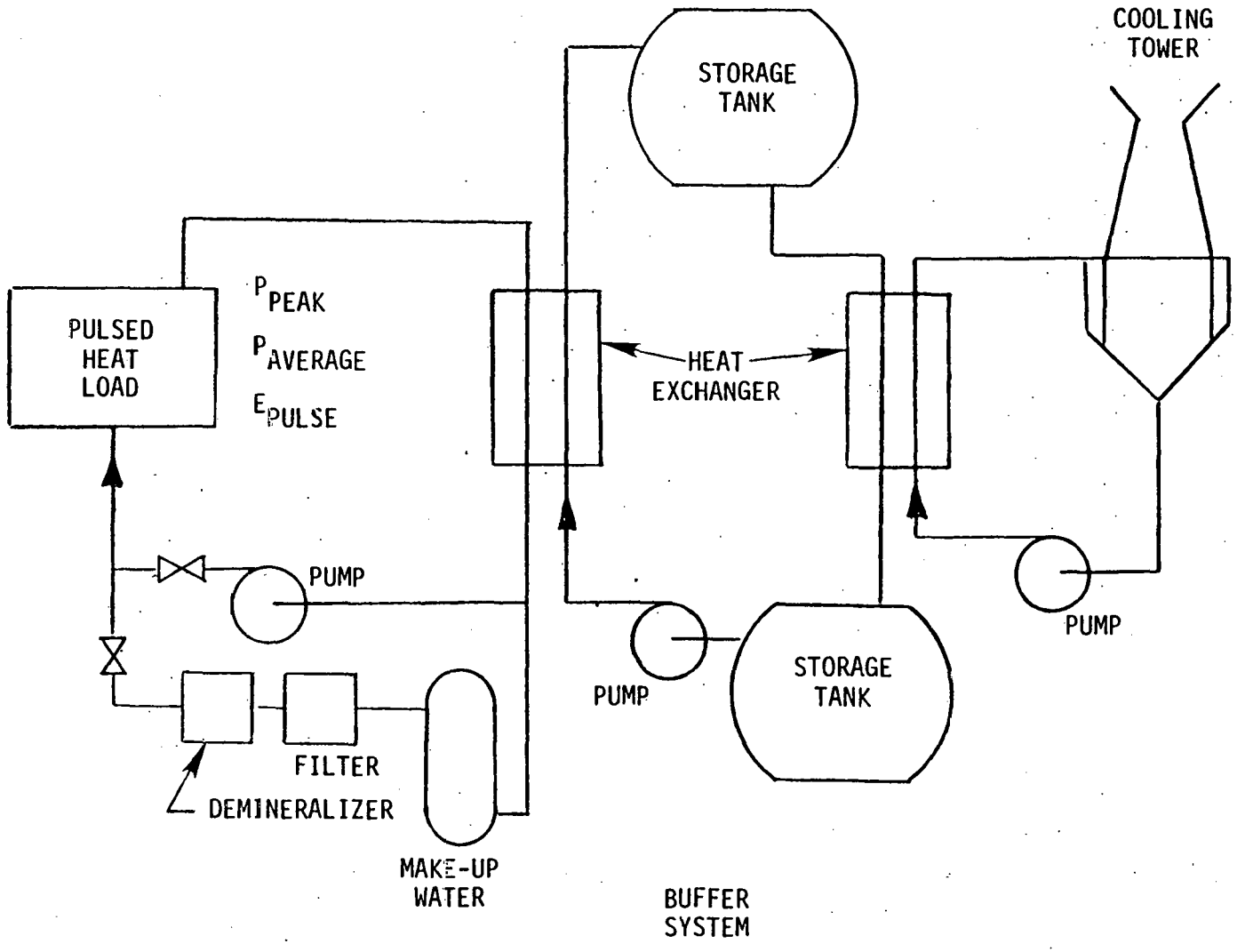

Figure 2-31. A Simplified Schematic Diagram Showing the Basic Features of the Heat Dissipation System Associated with a Pulsed Heat Load Characterized by a Peak Power, an Average (over the pulse) Power, and a Total Energy Production During the Pulse (also see Figure 2-32).

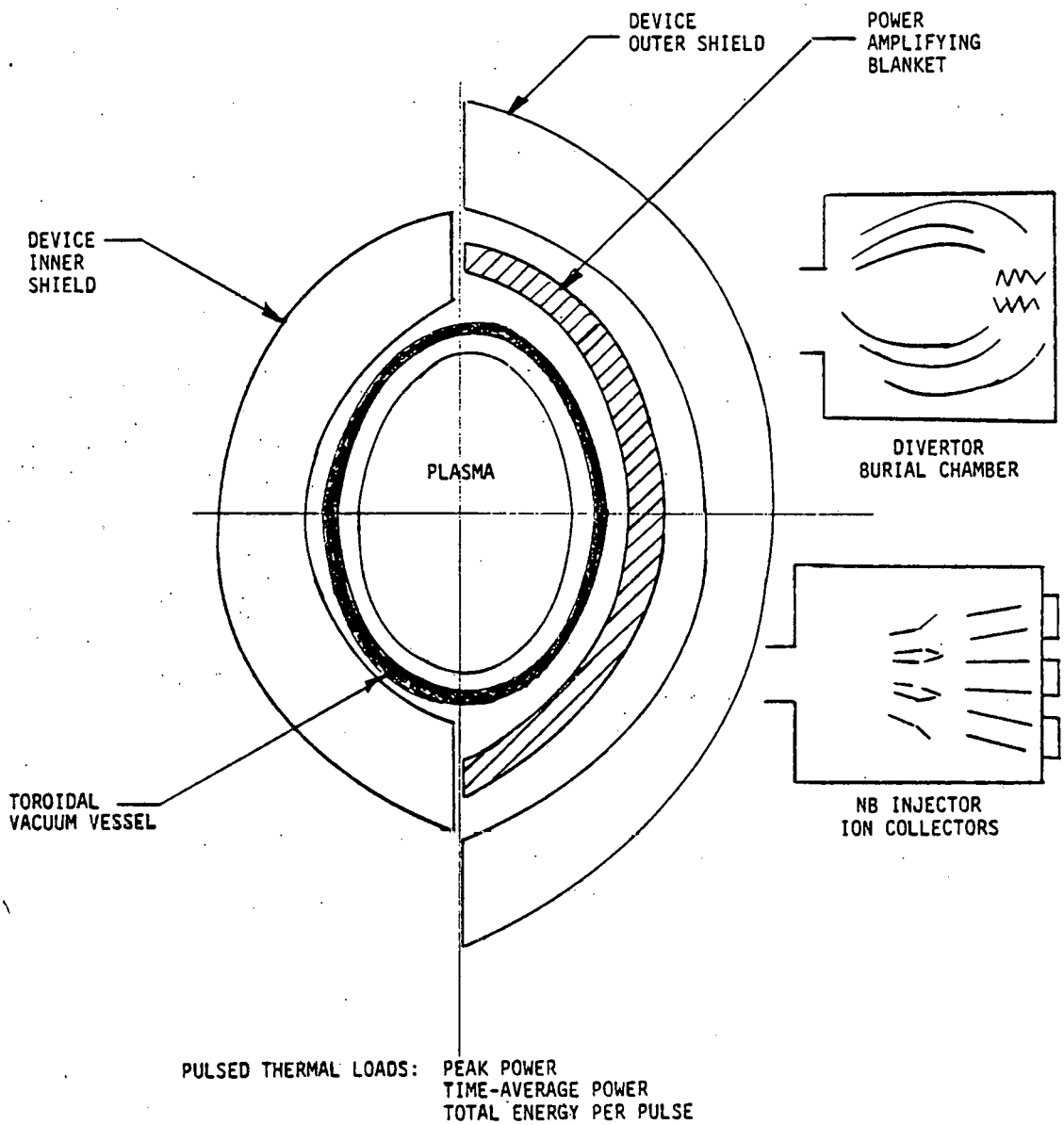

Figure 2-32. Schematic Representation of the Various Pulsed Thermal Loads for Which a Heat Dissipation System Represented in Figure 2-31 is sized in COAST.

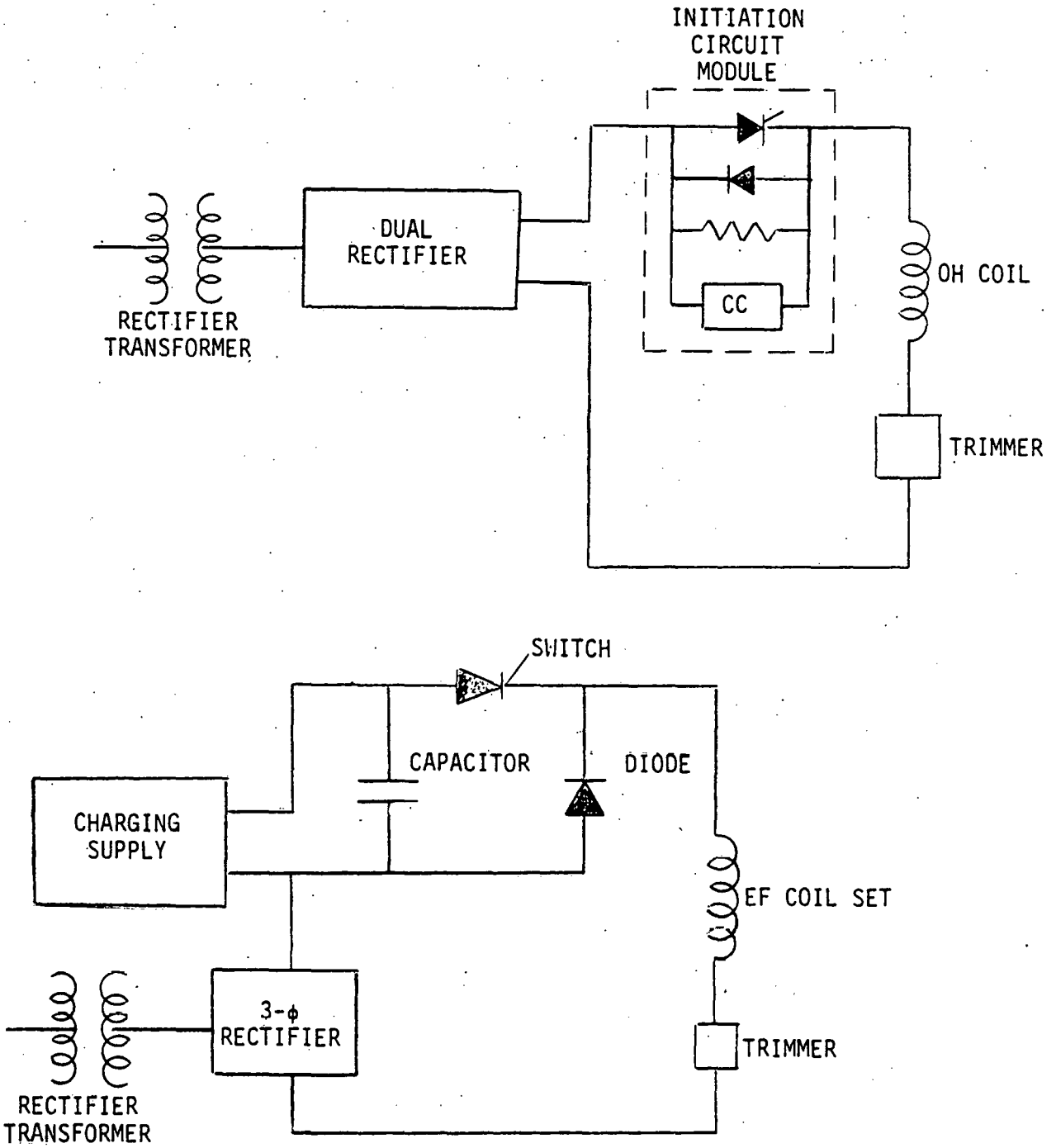

Figure 2-33. Schematic of the Basic Circuits Associated with the PF Coil Power Supplies Sized in COAST.

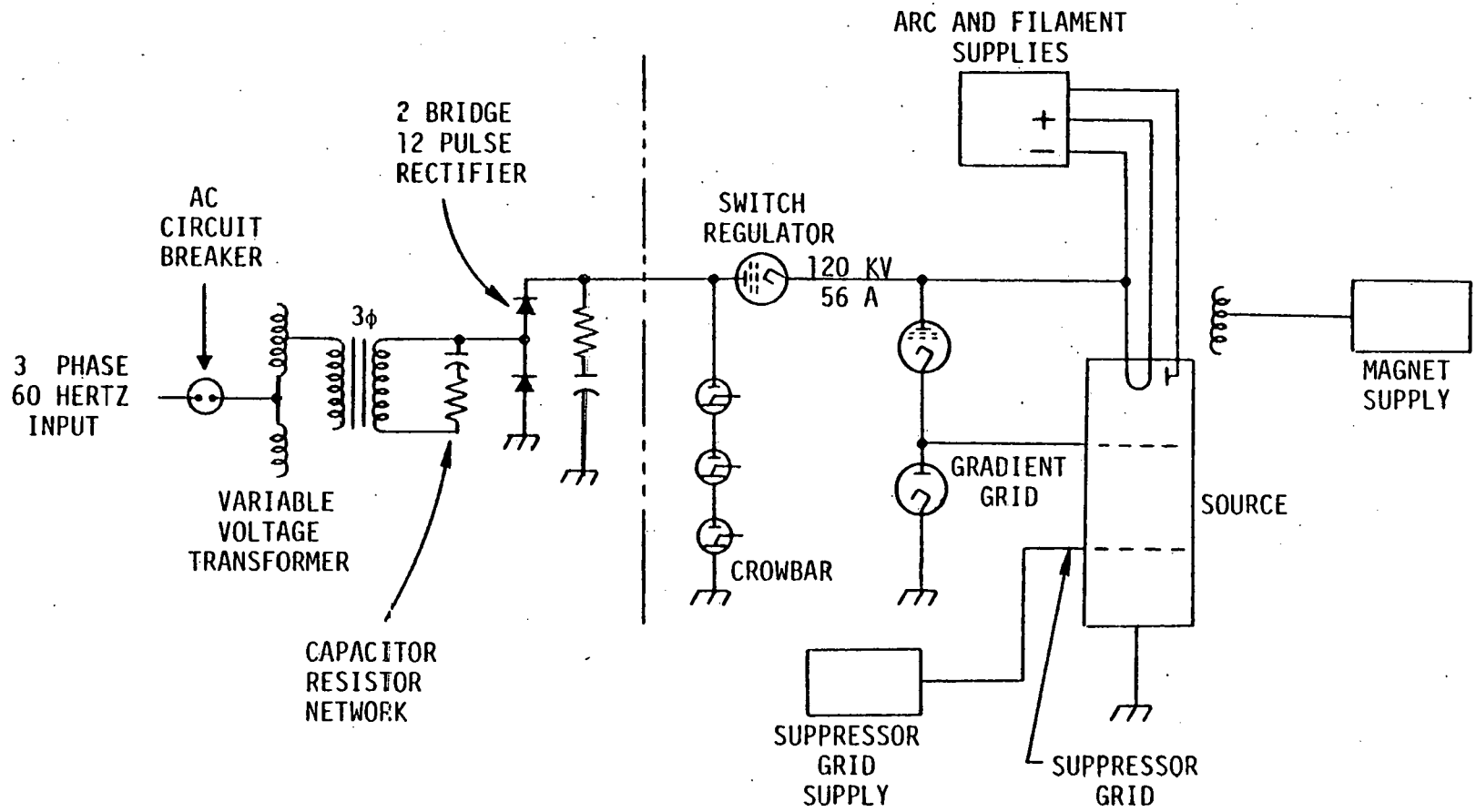

Figure 2-34. Typical Power Supply Circuit for Neutral Beam Source.

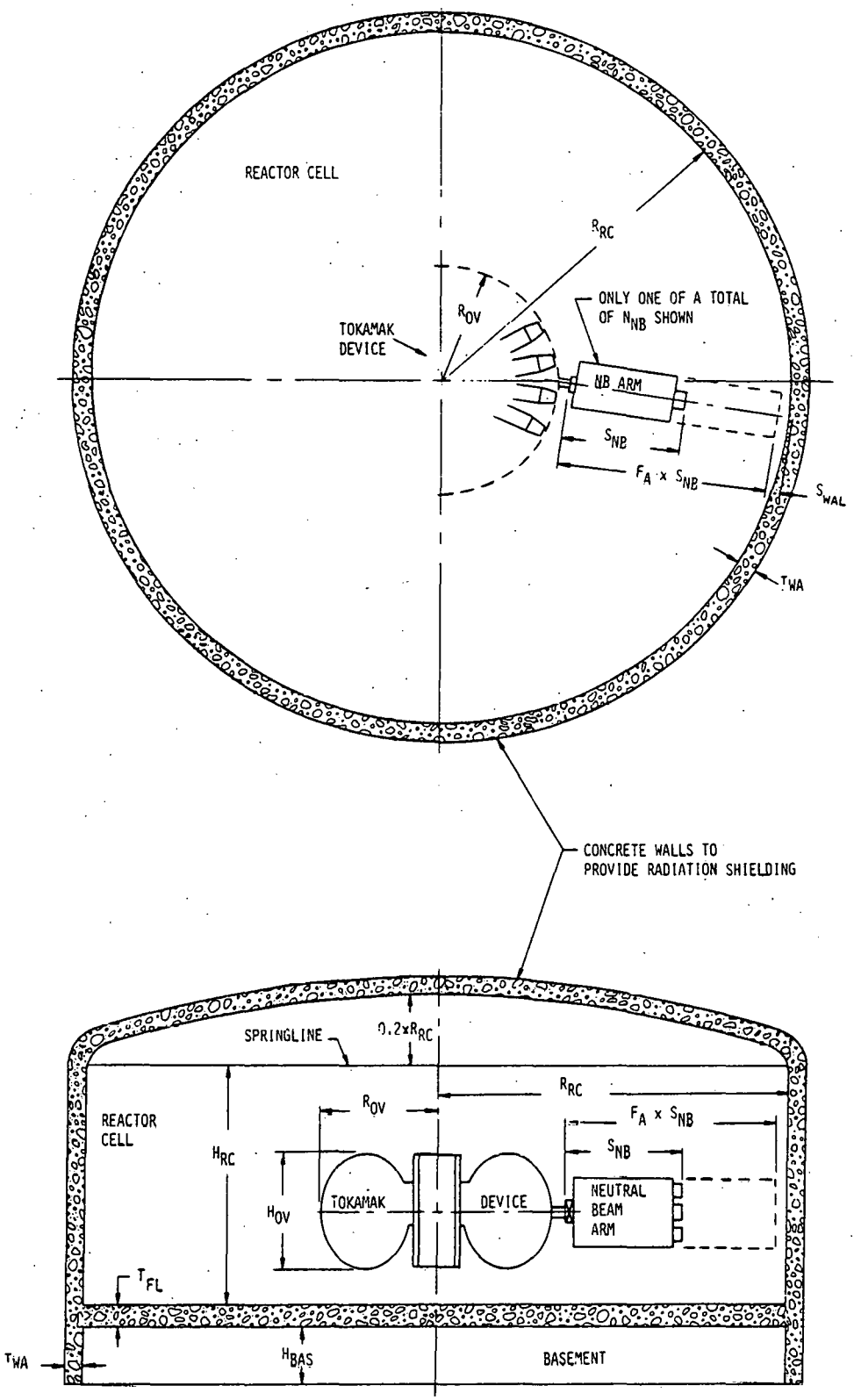

DIMENSIONS ARE INDICATED TO SHOW THE CELL SIZE DEPENDENCE ON THE DEVICE AND NB ARM SIZES

Figure 2-35. Two Views of the Reactor Cell.

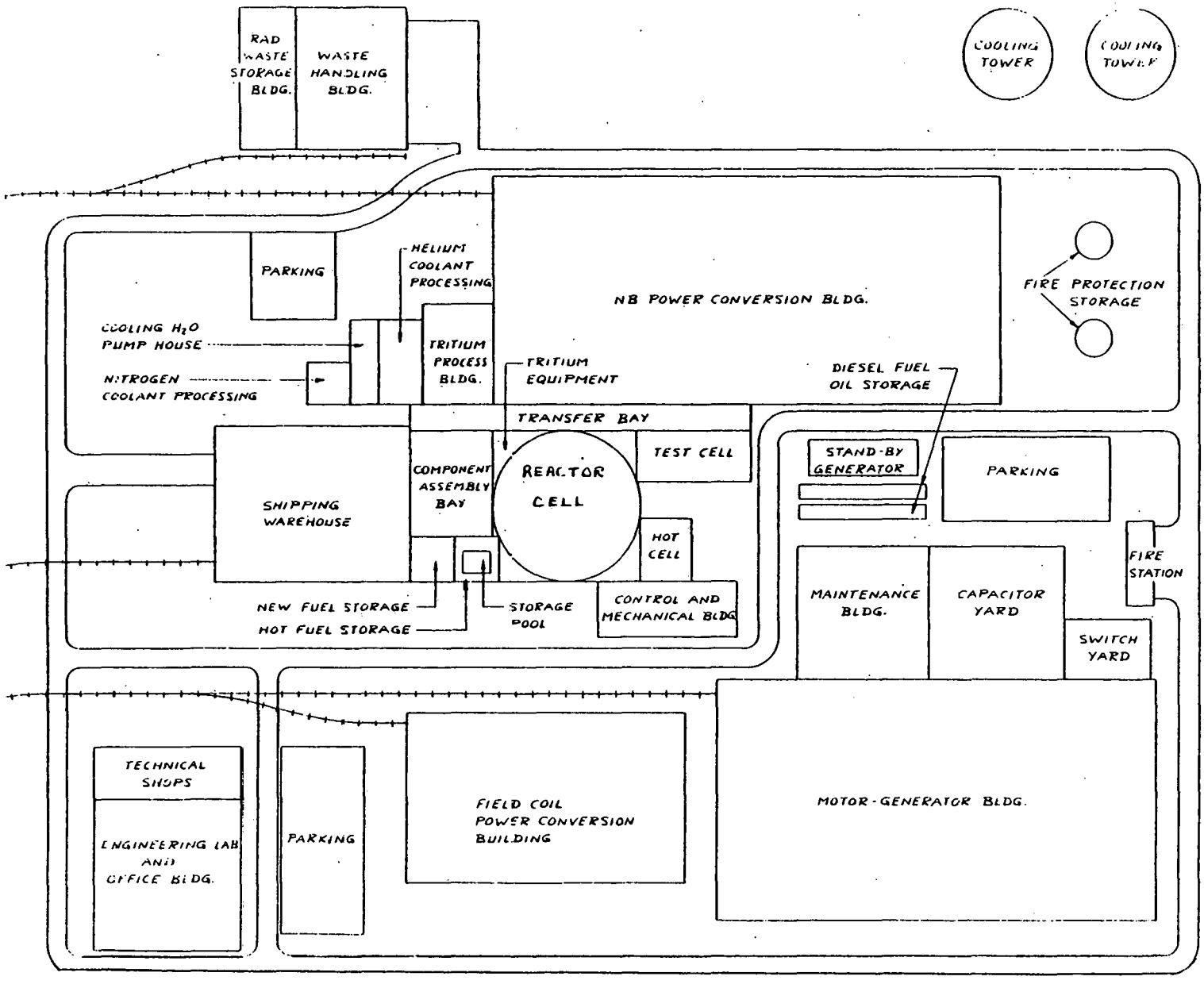

COAST DATA ON THE FACILITY COSTS AS CATAGORIZED IN TABLE 2-3 ARE REQUIRED. THE ACTUAL LAYOUT AND BUILDING DIMENSIONS ARE NOT CONSIDERED IN THE PRESENT VERSION OF COAST.

Figure 2-36. A Schematic Representation of a Tokamak Reactor Facility.

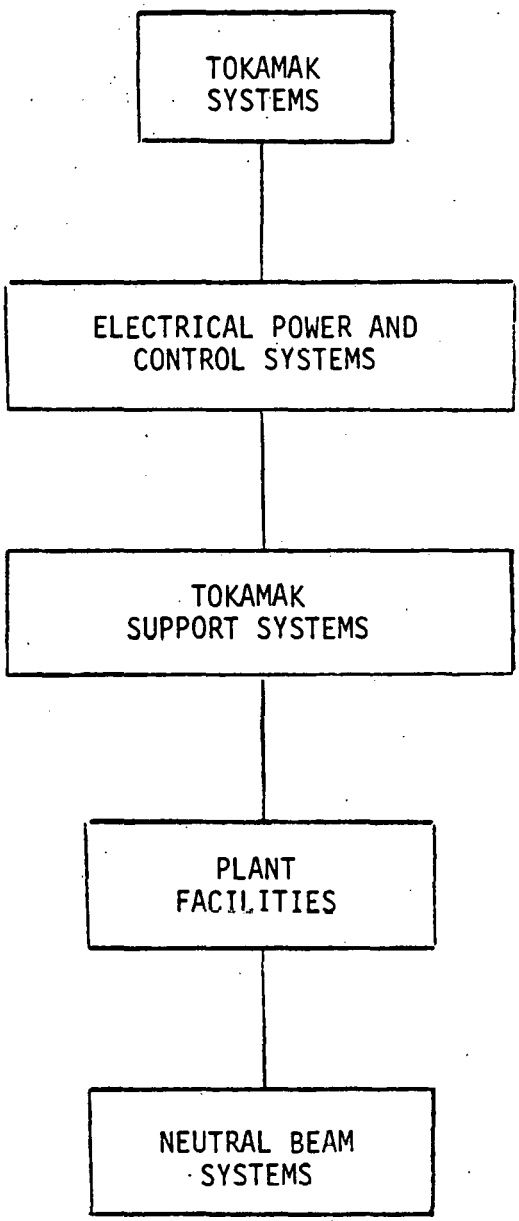

Figure 2-37. The Main Systems for which COAST Calculates Costs.

TABLE 2-1

PLASMA ENGINEERING ASSUMPTIONS FOR THE ITERATION CALCULATIONS INDICATED IN THE LOGIC DIAGRAM, FIGURE 2-3

PLASMA VARIABLE	OPTION 1	OPTION 2	OPTION 3	OPTION 4	OPTION 5
CONFINEMENT TIME, τ_E	V	F or C	F or C	F or C	F or C
NB POWER, P_{NB}	F	V	F	F	F
$\bar{n}_e\tau_E$	C	F or C	V	C	F or C
ELECTRON DENSITY, $\bar{n}_e$	F or C	F or C	C	V	F or C
ELECTRON TEMPERATURE, T_e	F	F	F	F	V

V = VARIED MAGNITUDE BASED ON OPTION SELECTED

C = CALCULATED MAGNITUDE BASED ON THE SELECTED SCALING LAW FOR $\bar{n}_e\tau_E$

F = FIXED MAGNITUDE BASED ON INPUT DATA

P_{NB} = 0 IF IGNITION CONDITIONS ARE ASSUMED

TABLE 2-2

SUMMARY OF COAST MODELS FOR TOKAMAK ENGINEERING

TCORE (TOKAMAK CORE CALCULATION)

- SETS COMPONENT SPACE REQUIREMENTS WITHIN TF COIL BORE SPACE
- COMPONENTS INCLUDE: VACUUM VESSEL, RADIATION SHIELDING, EF COILS (IF INSIDE), ACCESS GAPS, TF COIL DEWARS (IF S/C), AND VERTICAL SPACE REQUIREMENTS (SEE FIG. 2-9 AND 2-10)
- THE PLASMA CROSS SECTION AND THE LIMITER/LINER/SCRAPE-OFF SPACE ARE TAKEN INTO ACCOUNT

SHIELD (SHIELD SIZING FOR THE TOKAMAK AND REACTOR CELL)

- THE DEVICE SHIELDING THICKNESSES ARE CALCULATED BASED ON: 1) MAXIMUM PERMISSIBLE FLUENCE TO THE COIL; 2) NUCLEAR HEATING RATES IN SC COILS; AND 3) NEUTRON ATTENUATION IN SHIELD MATERIAL
- THE REACTOR CELL SHIELDING THICKNESSES FOR THE FLOOR AND WALL ARE CALCULATED ASSUMING ORDINARY CONCRETE AND BASED ON RADIATION DOSE LIMITS TO PERSONNEL

NBEAM (NEUTRAL BEAM INJECTION SYSTEM SIZING AND RATING)

- SIZING CALCULATIONS TAKE INTO ACCOUNT THE ION SOURCE GEOMETRY AND BEAM SCRAPE-OFF ASSUMPTIONS
- GAS NEUTRALIZERS ARE SIZED AND THE ACTUAL NEUTRALIZATION EFFICIENCY (NOT THE ASYMPTOTIC VALUE)
- CALCULATES HEAT LOADS, AND VACUUM SYSTEM OPERATING DATA
- CALCULATES THE PERFORMANCE OF AN ION COLLECTOR SYSTEM BASED ON A COMPACT SPACE-CHARGE CONTROLLED ENERGY COLLECTOR AND RECOVERY (IF DESIRED) SYSTEM
- CALCULATES NB DUCT ACCESS REQUIREMENTS TO THE TOROIDAL VACUUM VESSEL
- CALCULATES THE ELECTRICAL-TO-BEAM POWER EFFICIENCY BASED ON INPUT DATA FOR POWER SUPPLY EFFICIENCIES, TRANSMISSION LOSSES, DIRECT RECOVERY EFFICIENCIES, SECONDARY ELECTRON PRODUCTION, AND THE ATOMIC FRACTION OF THE SOURCE BEAM

BANDS (BLANKET AND SHIELD SIZING, RATING, AND COSTING)

- A BLANKET/SHIELD ASSEMBLY COVERING THE OUTER HALF OF THE VACUUM VESSEL IS SIZED FOR UP TO SIX RADIAL ZONES, e.g., STRUCTURAL ZONE, FISSILE FUEL OR NEUTRON MULTIPLICATION BLANKET, TRITIUM PRODUCING BLANKET, REFLECTOR, RADIATION SHIELDING ZONE, AND A COOLING MANIFOLD

- EACH ZONE IS COMPOSED OF UP TO SIX DIFFERING MATERIALS SPECIFIED AS VOLUME FRACTIONS (SEE FIG. 2-18)
- PERFORMANCE IN TERMS OF FUEL (BOTH FISSILE AND FUSILE) AND THERMAL PRODUCTION ARE CALCULATED TAKING INTO ACCOUNT WALL COVERAGE FRACTION, NEUTRON FLUX DISTRIBUTION, AND THE TOTAL FUSION POWER GENERATED BY THE PLASMA
- THE THERMAL AND ELECTRICAL RATINGS AND PERFORMANCE CHARACTERISTICS ARE ESTIMATED FOR SIZING A POWER PRODUCTION FACILITY (IF DESIRED) INCLUDING HEAT EXCHANGERS, GENERATORS, AND HEAT DISSIPATION AND ENERGY STORAGE EQUIPMENT
- THE BLANKET/SHIELD ASSEMBLY, THERMAL POWER HANDLING, AND POWER PRODUCTION SYSTEMS ARE COSTED

FUELS (PLASMA FUEL SYSTEMS SIZING, RATING, AND COSTING)

- FOR ON-SITE BATCH MODE FUELING (USED ON TNS), CALCULATIONS ESTIMATE THE ANNUAL TRITIUM CONSUMPTION AND SIZE THE FUEL STORAGE, DELIVERY, AND CRYOGENIC DISTILLATION SYSTEMS TAKING INTO ACCOUNT THE PLASMA VOLUME AND THE RATIO OF THE VESSEL SURFACE TO PLASMA SURFACE
- FOR ON-SITE CONTINUOUS MODE FUELING (USED ON DTHR) PLASMA, NEUTRAL BEAM, AND DEVICE OPERATIONS DATA ARE USED TO CALCULATE FUELING RATES, ON-SITE QUANTITIES, EXHAUST RATES, AND URANIUM TRAP SIZES
- THE CONTINUOUS MODE FUELING IS BASED ON DIVERTOR EXHAUSTING AND INCLUDES STORAGE, DELIVERY, EXHAUST PROCESSING, AND CRYOGENIC DISTILLATION SYSTEMS (SEE FIG. 2-21)

BUNDLE (BUNDLE DIVERTOR MAGNETIC COIL SIZING)

- CALCULATES COIL GEOMETRY, ACCESS CONDITIONS FOR DIVERTOR PLASMA FLOW (SEE FIG. 2-22)
- SIZES RADIATION SHIELDING SPECIFIED FOR COIL
- CALCULATES COIL CURRENT BASED ON FORMULAE DERIVED FROM DETAILED ANALYSES

BMAX (B-FIELD MAXIMUM AT TF COIL INNER LEG)

- THE FIELD AT THE INNER LEG IS CONSTRAINED BY BOTH ENGINEERING ASSUMPTIONS AND PLASMA REQUIREMENTS
- IF ENGINEERING REQUIREMENTS ARE NOT MET, THE CALCULATION IS TERMINATED
- IF THE MAXIMUM FIELD DIFFERS FROM THAT REQUIRED BY PLASMA, THE PLASMA CURRENT IS RECALCULATED ($I_p \propto B_t$)

TFCOIL (TOROIDAL FIELD COIL GEOMETRY CALCULATIONS)

- FOUR COIL TECHNOLOGIES CONSIDERED: 1) Cu; 2) S/C NbTi; 3) S/C Nb_3Sn; AND 4) NbTi/Cu COMBINATION
- THREE COIL SHAPES CONSIDERED: 1) STANDARD CONSTANT TENSION D; 2) COMPACT CONSTANT TENSION D; AND 3) CIRCULAR (SEE FIG. 2-24)
- COIL BORE SIZING BASED ON: 1) SPACE REQUIREMENTS FOR SHIELDING, BLANKET, ETC.; 2) PLASMA RIPPLE REQUIREMENTS; 3) NB DUCT CONSTRAINTS; AND 4) DIVERTOR ACCESS REQUIREMENTS
- THE AREA OF STRUCTURE REQUIRED TO CARRY LOADS IN A FUNCTION OF COIL TENSION AND ENGINEERING ASSUMPTIONS ON BOLTING AND DESIGN CONSTRAINTS
- REQUIREMENTS FOR POWER SUPPLIES, AND HEAT DISSIPATION SYSTEMS ARE CALCULATED

BUCKCY (BUCKING CYLINDER SIZING)

- ANY FRACTION OF THE LOAD DUE TO CENTERING FORCES CAN BE ASSUMED IN CALCULATING THE REQUIRED WALL THICKNESS
- WALL THICKNESS IS BASED ON BOTH BUCKLING AND COMPRESSIVE MODES
- CYLINDER HEIGHT IS BASED ON COIL SHAPE ASSUMPTION (STANDARD D OR COMPACT D)

OHCOIL (OHMIC HEATING COIL ASSEMBLY SIZING)

- A LONG SOLENOID WITH AN AIR CORE IS SIZED FOR A GIVEN RADIUS SET BY THE TF COIL ASSEMBLY
- BOTH COPPER AND S/C ARE CONSIDERED
- CURRENT DENSITY LIMITS, MAX OH FIELD AT CONDUCTOR, AND HOOP STRESS LIMITS MUST BE SATISFIED
- THE COIL BUILD IS MINIMIZED FOR THE ASSUMED ENGINEERING GROUND RULES (INPUT)

PFCOIL (POLOIDAL FIELD COIL SIZING RATING)

- GENERALIZED SIZING FOR EF COILS LOCATED EITHER INSIDE OR OUTSIDE TF COIL BORE IS INCORPORATED FOR EITHER NORMAL OR S/C ASSEMBLIES
- EF COIL CURRENT SCALING BASED ON A REFERENCE INPUT CURRENT SET IS MODELED USING EQUILIBRIUM CRITERIA FOR THE CONSERVATION OF THE VERTICAL FIELD AS WELL AS THE ESTABLISHMENT OF POLOIDAL NULL POINTS (SEE FIG. 2-30)
- COIL/COIL AND COIL/PLASMA INDUCTANCES ARE CALCULATED FOR THE RESULTING COIL SIZES AND LOCATIONS AND USED TO OBTAIN REQUIRED COIL VOLTAGES FOR POWER SUPPLY RATINGS

- TEMPORAL PROFILES ALLOW INSTANTANEOUS POWERS, AND ACCUMULATED ENERGY DELIVERED PER COIL SET TO BE OBTAINED AND ARE BASED ON THE TIME BEHAVIOR OF THE PLASMA CORE AS CALCULATED FROM ASSUMPTIONS (INPUT) FOR PLASMA START-UP

HEATD (HEAT DISSIPATION SYSTEMS SIZING AND RATING)

- COPPER COIL COOLING, HELIUM REFRIGERATION, AND LIQUID NITROGEN REFRIGERATION SYSTEMS ARE SIZED (SEE FIG. 2-31)
- ELECTRICAL LOADS ARE OBTAINED FOR THE COOLING OF MAGNETIC FIELD COILS, VACUUM VESSEL, SHIELD/BLANKET, DIVERTOR, AND NEUTRAL BEAM INJECTORS
- EXPERIMENTAL AREA VENTILATION AND THE PLANT CIRCULATING WATER SYSTEMS ARE SIZED AND RATED

POWSYS (TOKAMAK POWER SYSTEMS SIZING AND RATING)

- PF COIL POWER SUPPLIES (RECTIFIERS, SWITCHES, CAPACITOR BANKS, DIODES, AND TRANSFORMERS) ARE SIZED AND RATED (SEE FIG. 2-33)
- TF COIL SUPPLIES FOR EITHER CHARGING THE S/C COILS AND/OR THE M-G-F-R FOR THE NORMAL COILS ARE RATED
- M-G-F RATINGS FOR BOTH PF COILS AND NB'S ARE OBTAINED
- FOR THE NB'S EITHER AN M-G-F SET OR A SUBSTATION IS CONSIDERED AS WELL AS A LOAD-SMOOTHING CIRCUIT IN THE CASE OF A BEAM-DRIVEN DEVICE

FACSYS (FACILITY SYSTEMS SIZING)

- THE REACTOR CELL IS A CYLINDRICAL STRUCTURE WITH A DOME-TOP AND A BASEMENT FOR THE TOKAMAK SUPPORT SYSTEMS (SEE FIG. 2-35)
- THE FACILITIES INCLUDE: 1) SITE IMPROVEMENT AND SERVICES; 2) REACTOR OPERATIONS BUILDING; 3) REACTOR SUPPORT STRUCTURE; 4) THE ELECTRICAL PLANT; AND 5) OTHER STRUCTURES

TGEOM (TOKAMAK GEOMETRY TABLE FOR THE DEVICE MIDPLANE AND IN THE VERTICAL DIRECTION)

- TABLES SUMMARIZE DATA FOR ENGINEERING DRAWINGS
- MIDPLANE DIMENSIONS INCLUDE ALL COMPONENT WIDTHS AND OUTSIDE RADII FROM DEVICE CENTER TO OUTSIDE OF TF COIL OUTER LEG
- VERTICAL DIMENSIONS INCLUDE ALL COMPONENT WIDTHS AND HEIGHTS ABOVE MIDPLANE TO THE TOP OF THE TF COIL AT ITS HIGHEST POINT

TABLE 2-3

TABULATION OF THE VARIOUS TOKAMAK FACILITIES FOR WHICH COAST COST DATA IS REQUIRED TO COMPLETELY COST ALL SYSTEMS

1. SITE, IMPROVEMENT, AND SERVICES
   - LAND PURCHASE
   - ACCESS RAIL FROM MAIN LINE
   - BASIC UTILITY SERVICE
2. REACTOR OPERATIONS BUILDING
   - REACTOR CELL
   - BASEMENT FACILITY BELOW CELL
   - NEUTRAL BEAM TEST CELL
   - REMOTE SYSTEMS OPERATION
   - CONTAINMENT AREAS
3. REACTOR SUPPORT STRUCTURES
   - DEUTERIUM/TRITIUM PROCESSING FACILITY
   - MAGNETIC FIELD COILS CRYOGENIC PLANT BUILDINGS
   - RADWASTE PROCESSING BUILDING
   - CONTROL AND MECHANICAL EQUIPMENT BUILDING
4. ELECTRICAL PLANT STRUCTURES
   - MOTOR-GENERATOR BUILDING & FOUNDATION
   - FIELD COIL POWER CONVERSION BUILDING
   - NB POWER CONVERSION BUILDING
   - CAPACITOR YARD
   - SWITCH YARD STRUCTURE
   - UTILITY TUNNEL
   - SUBSTATION BUILDING
   - STAND-BY GENERATOR BUILDING
   - CRANE-MOTOR GENERATOR BUILDING
5. OTHER STRUCTURES
   - ENGINEERING LABS/OFFICES
   - TECHNICAL SHOPS
   - MAINTENANCE BUILDING
   - COOLING WATER PUMP HOUSE
   - COOLING TOWERS
6. MISCELLANEOUS
   - CRANES
   - CRANE ERECTIONS

TABLE 2-4

COAST COST MODEL EQUATIONS FOR A NUMBER OF THE ELECTRICAL SYSTEMS

STEAM GENERATOR COST

$$C_{SG} = (U_{C,SG1} + U_{C,SG2} \times T_C) \times \left(\frac{P_E}{R_{S,SG}}\right)^{E_{C,SG}}$$

WHERE THE COAST INPUT PARAMETERS ARE:

$U_{C,SG1}$, $U_{C,SG2}$ } UNIT COST COEFFICIENTS

$R_{S,SG}$ = REF. STEAM GENERATOR RATING (MW)

$E_{C,SG}$ = ECO.-OF-SCALE FOR STEAM GENERATORS

T_C = OPERATING TEMPERATURE (K) OF GENERATOR

COAST CALCULATES P_E (MW) = POWER PRODUCTION DURING PLASMA BURN

MOTOR-GENERATOR-FLYWHEEL COST

$$C_{MGF} = U_{C,MOT} \times \left(\frac{P_n}{R_{S,M}}\right)^{E_{C1}} + U_{C,GEN} \times \left(\frac{P_G}{R_{S,G}}\right)^{E_{C2}}$$

$$+ U_{C,FLY} \times E_F$$

WITH A MAXIMUM OF THREE MFG SETS, IF REQUIRED, TO SUPPLY:

1) TF COILS (if Cu);
2) PF COILS; AND/OR
3) NB INJECTORS (IF NO SUBSTATION).

COAST INPUT DATA IS:

$U_{C,MOT}$, $U_{C,GEN}$, AND $U_{C,FLY}$ = UNITS COSTS BASED ON A REFERENCE RATING FOR THE MOTOR AND GENERATOR AND IN THE ENERGY STORAGE OF THE FLYWHEEL.

$R_{S,M}$, $R_{S,G}$ = REFERENCE RATINGS (MW) FOR THE WATER AND GENERATOR SETS, RESPECTIVELY.

E_{C1}, E_{C2} = ECONOMY-OF-SCALE FACTORS

COAST CALCULATES THE RATINGS:

P_n (MW) FOR THE MOTOR SET

P_G (MW) FOR THE GENERATOR SET

P_F (MJ) FOR THE FLYWHEEL SET

TABLE 2-4 (continued)

RECTIFIER COST (FOR FIELD COIL POWER SUPPLY SYSTEMS)

$$C_{REC} = U_{C,R} \left(\frac{VA}{R_{S,V1}}\right)^{E_{C,V1}} + U_{C,R1} \left(\frac{\gamma \times VA}{R_{S,V2}}\right)^{E_{C,V2}}$$

$$+ U_{C,R2} \times (\gamma \times A - 5)$$

WHERE C_{REC} CAN BE FOR TF COILS (Cu), OH COILS, AND EACH SET OF EF COIL SYSTEMS.

COAST INPUT DATA IS:

$U_{C,R1}$, $U_{C,R2}$, AND $U_{C,R3}$ = UNIT COST COEFFICIENTS BASED ON REFERENCE RATINGS AND A CURRENT RATING

$R_{S,V1}$, $R_{S,V2}$ = REFERENCE RATINGS ON THE MEGAVOLT-AMPERE CAPABILITY OF A "STANDARD" UNIT

$E_{C,V1}$, $E_{C,V2}$ = ECONOMY-OF-SCALE FACTORS

COAST CALCULATES:

VA (MVA) = VOLT-AMPERE RATING REQUIRED

A (kA) = AMPERE RATING REQUIRED

γ = [TOTAL PULSE TIME/PULSING RATE]$^{1/2}$ WITH THE RESTRICTION THAT $1 \leq \gamma \leq 0.444$

TABLE 2-5

COAST COST MODEL EQUATIONS FOR THE TRITIUM STORAGE SYSTEM AND THE HEAT DISSIPATION SYSTEM

TRITIUM STORAGE SYSTEM COST

$$U_{TSS} = U_{C,1} + U_{C,2} \times Q_{1S} + U_{C,3} \times Q_{1S}^{2/3} + U_{C,4} \times Q_{1S}^{1/3} + U_{C,5} \times Q_{1S}/D_{TST} + U_{C,6} \times (Q_{1S}/D_{TST})^{2/3}$$

WHERE $U_{C,1}, \ldots, U_{C,6}$ = UCTSS(1), ..., UCTSS(6)
= UNIT COST COEFFICIENTS INPUT INTO COAST

D_{TST} = INPUT VALUE FOR NUMBER OF DAYS OF TRITIUM STORED ON SITE ASSUMING A NORMAL PULSING PERIOD FOR THOSE DAYS

Q_{1S} = NUMBER OF MOLES OF TRITIUM INJECTED IN EACH PULSE TIMES THE NUMBER OF PULSES IN D_{TST} DAYS OF PULSING. COAST CALCULATES Q_{IS} CONSISTENT WITH THE PLASMA VOLUME, DENSITY, AND PARTICLE CONFINEMENT TIME.

HEAT DISSIPATION SYSTEMS COST

$$C_{HD} = U_{C,HD1} \times \left(\frac{P_{PEAK}}{R}\right)^{E_{C,HD1}} + U_{C,HD2} \times \left(\frac{P_{AVERAGE}}{R}\right)^{E_{C,HD2}} \times R^{E_{C,HD3}} + U_{C,HD3} \times \left(\frac{E_{PULSE}}{R}\right)^{E_{C,HD4}}$$

WHERE

C_{HD} = CVVC, FOR THE VACUUM VESSEL
= CDVC, FOR THE DIVERTOR
= CNBC, FOR THE NEUTRAL BEAM ION COLLECTOR
= CVSC, FOR THE DEVICE SHIELD

R = R_{VV}, R_{DV}, R_{NBS}, R_{SH} — RESPECTIVE COOLANT TEMPERATURE RISE (K) (INPUT VARIABLES)

$U_{C,HD1}, \ldots, U_{C,HD4}$ ARE THE RESPECTIVE UNIT COST COEFFICIENTS (INPUT VARIABLES), AND

P_{PEAK}, $P_{AVERAGE}$, AND E_{PULSE} ARE THE RESPECTIVE PEAK POWER, AVERAGE POWER, AND ENERGY PER PULSE LOADS AS CALCULATED IN COAST

SEE FIGURES 2-31 and 2-32.

3.0 DEVELOPMENT AND VERIFICATION

COAST was originally developed as a tool for comparison of TF coil concepts and their implications in the TNS trade studies conducted by the ORNL/Westinghouse study team. Version 3 of the code was used in the final stages of that study (see Reference 9). For the TNS work, four ignition tokamak point designs were selected and an extensive series of parametric trade studies were performed to consistently evaluate the relative costs and performance parameters of various designs over a wide range of plasma sizes. Four different types of TF coil technologies were investigated: water-cooled copper coils, superconducting NbTi and Nb_3Sn coils, and a "hybrid" coil arrangement consisting of a normal conducting Cu coil nested with a superconducting NbTi coil. From the study, which extensively used COAST, it was concluded that the superconducting option was more attractive than copper, and of the superconducting technologies, the Nb_3Sn is more attractive than both the NbTi and the hybrid Cu/NbTi options.

During the final stages of coding, COAST 3 was applied to the sizing and costing of the conceptual design of TFTR. The code predicted the main features of that device and estimated the capital costs to within 5% of the costs determined during the conceptual design study. In addition, the GA/ANL TNS reactor system was examined. The GA/ANL reactor involved a doublet plasma which the COAST code could not model in detail, but the code calculations were consistent with both the sizing and costing results reported by that study team.

Development of COAST 4 began following the decision by DoE to fund the study of fission/fusion hybrids by the Westinghouse team. All of the features of COAST 3 were maintained or upgraded during COAST 4 development so that all the TNS options and TFTR could still be modeled - in many areas more effectively. In fact, the fourth version of COAST sizes TFTR with more accuracy since upgraded models were added to account for beam-driven operation as well as ignition operation. As COAST 4 was being completed, the code was applied to the results of the design study of a fusion-driven tokamak hybrid reactor for fissile fuel

production conducted for EPRI by Westinghouse (Reference 10). This study was carried out by a team of Westinghouse engineers who, for the most part, were different from the team that provided the calculational models coded in COAST 4. Thus, the EPRI study provided an excellent check of the models incorporated. The code results were very compatible with the EPRI design; the main features and operating parameters of the hybrid device were similar and the capital cost estimates were in good agreement. Considerable effort was applied to the study of any differences between the code results and the study design. In every case, the basic models were found to be correct and accurately predicted size and cost. In general, differences were found to be more closely associated with engineering assumptions and ground rules.

Since the models and logic in COAST have been generalized to allow a wide range of variation in tokamak systems required to conduct the various Westinghouse studies (from TFTR through a commercial hybrid reactor, CTHR), the input is difficult to formulate. A considerable amount of time and effort is required to produce an input deck which satisfactorily describes a specific tokamak design. For this reason, it has been convenient to set-up a library of input data decks for typical tokamak designs and modify these reference decks in various studies. The example given in this report is one deck developed as part of the COAST library used at Westinghouse.

4.0 RESTRICTIONS

4.1 USER RESPONSIBILITY

Two approaches can be taken by the user of this code. First, he can assume that the engineering and programming that went into producing the code reasonably represents a typical demonstration hybrid tokamak reactor with a fissile fuel breeding blanket, bundle divertor, and possibly power conversion capabilities. He can then proceed to use it as a "black box," more or less, inputting the recommended parameter values in the text and sample case with minor perturbations and proceed from there. On the other hand, where "significant" design changes from the example are to be modeled, or innovative subsystem designs are to be incorporated in his tokamak, he should check the coding directly to assure himself that the system he has is reasonably represented by COAST. That is, the system is not beyond the range of validity implicit in the program. This is particularly true if the user anticipates exploring plasma start-up options and parameters. Unfortunately, this level of understanding may require a great deal of time, but the investment is highly recommended by the authors to avoid the possibility of generating inconsistent, even nonsense, data. Although many inconsistencies are recognized by the code where flags are set to advise the user, the simplist tokamak is a very complex device and there is a limit to how general any system model can be made. Should such studies be undertaken, the authors would be interested in positive feedback on the results so that future versions of COAST may be improved and the capabilities extended.

4.2 PROGRAM LIMITATIONS

In the present form, COAST version 4, there are a number of limitations which should be kept in mind when using the code. As the models have evolved and are updated, COAST has moved a long way in becoming a general description of a tokamak reactor, but only during its application to various reactor design studies does one appreciate model limitations. The code has been applied to a variety of designs and the various models have been updated as the need was

identified. Such updates are anticipated as the code is utilized in the future.

The most fundamental limitation of COAST 4 is that it is generic to tokamaks as opposed to fusion devices in general (mirrors, laser, etc). Next would be that the D-T reaction is implicit in the plasma modeling as opposed to the possibility of advanced fuels such as D-D, D-He^3, D-B. Finally, there is an inherent limit to the degree of detail incorporated in each system model. As a design becomes more specific, the effects of design details are diluted in the generalized models and are not necessarily reflected in the output of COAST 4. In addition to these basic limitations, some system dependent limitations are also present.

While a doublet plasma may be approximated, it is not presently included as a design choice in the code. Neither has the option for RF heating nor negative ion source neutral beams been allowed, although the effects of negative ion sources have been approximated in computer runs by "fudging" the NB system input values. When the focus shifted to a bundle divertor, the poloidal divertor model remained incomplete except to allow space for its presence in the vertical geometry calculation.

There are also a few limitations which can affect the sizing of the TF coils. First, a simple first order approximation to field ripple can set the location of the outer TF leg. Possibly, a model for evaluating alpha particle transport losses in the plasma as a criterion to establish ripple constraints should be incorporated. Then, the blanket is only modeled between the outside leg of the TF coils and the plasma while future tokamak designs may incorporate inner blanket regions also. Another factor is the structure-to-conductor ratio, which is sensitive to design details. While it can be fixed by input, a routine in COAST 4 which models the required area of structure is based on coil tension. Other loads such as compression due to centering forces are not explicitely modeled, but the user has a multiplication-factor parameter to account for "unknowns." Considerations associated with the structural details of the coil cross section have not been incorporated so that the user must pay particular attention to the arrangements of bobbins, plates, and bolting.

Other areas to be reviewed include the power conversion system, effects of remote maintenance, vacuum containment, and the annual operating costs. The power conversion system model was designed to handle water and steam-cooling. It needs to be reviewed to determine if it is general enough to also handle the possibility of helium gas cooling. With respect to remote maintenance, while the cost of a RM system is included as a fixed cost, the impact of a remote maintenance system on the size and cost of those tokamak components on which it operates has not been addressed. A vacuum containment building has not been eliminated as a possibility for tokamaks and should be included by option in future versions of the code. Finally, the annual operating costs must be reviewed because they are incomplete. Items such as personnel salaries, utilities, plant services, maintenance, safety equipment, spare parts, supplies (demineralized water, liquid He/N coolant) etc, should be taken into account in future versions of COAST.

The code has a number of convenience features to facilitate the use of COAST in parametric studies. The print options are particularly tailored for convenience; detailed information for "one-shot" calculations may be chosen or short, limited output edits for scoping and exploratory runs. Controls and options are set-up for running comparison cases based on different engineering ground rules applied to a single design basis. The number of combinations of design features possible using COAST is enormous and WFPSD studies have not completely explored all of the possibilities. As new designs are considered, weaknesses in models and the code logic have been identified; consequently, an upgraded version of COAST is presently under consideration.

5.0 USER INSTRUCTIONS

5.1 COMPUTER REQUIREMENTS

Since the program was not designed to take advantage of any special computer features, the requirements are simple. On a CDC-7600, about 106,300 octal locations in small core memory are used of which about 14,700 octal are in labelled and blank COMMON'S. Compilation takes about 14.2 seconds and about 0.4 seconds are required for a complete calculation of a single tokamak device. Five devices with minor differences can be compared in 1.1 seconds (0.001 CRU-S) by taking advantage of the variation options available. The relocatable binary object code is catalogued and is available to WARD and WAESD personnel on the CDC-7600 at the Monroeville Nuclear Center with the following parameters:

Permanent file name - ANEMICOAST4C
Ident - ANEMI
Main frame - MFA

5.2 TYPICAL PROBLEM DECK SETUP

The deck setup is straight forward and follows conventions in Reference 11. A binary relocatable file was catalogued when the program was last compiled and continues to be available.

To use the binary relocatable file in the CDC-7600 system, this setup can be employed and is recommended.

	CARD TYPE	EXAMPLE
1	JOB	AN1__ , P4000,T10, STMFA, UAN___.
2	ACCOUNT	ACCOUNT (AN _____)
3	DESTINATION	DEST(OUTPUT,,AN,YURNAME)
4	ATTACH FILE	ATTACH(A,ANEMICOAST4C,ID=ANEMI,MF=MFA)
5	EXECUTE	A.
6	END OF SECTION	7/8/9
7		<INPUT DECK>
8	END OF INFORMATION	6/8/9

As each device is processed, certain parameters are stored on file (see Section 5.2) for use in statistical analyses or for automatic plotting. If the user chooses to use this file, he may do so by cataloging the local file, IPLOT, after execution of the program.

5.3 INPUT DECK DESCRIPTION

The structure and content of the input deck is presented in the following text. The input deck is basically composed of three sections. In the first section, a series of integer flags are set to define which coil technologies are to be analyzed for how many coil sets and whether certain optional features are to be incorporated in the sizing analysis. The second section contains almost exclusively real data which describe the constraints on the various subsystems of the device to be sized and reflect the engineering ground rules. In the third and final section, unit cost data for each subsystem is input besides economy of scale parameters for certain subsystems where applicable. The input is described card by card in the various tables of Section 5.0.

TABLE 5-1

COAST INPUT DECK -- CONTROLS AND OPTIONS

Only two input formats are used. An I is entered in the format column of the table for (12I6); while an E indicates (6E12.4).

CARD TYPE	FORMAT	VARIABLE	DESCRIPTION/COMMENTS
1	I		
	1-6	ISCA	ANALYSIS OPTION 0-SIZE DEVICE ONLY 1-SIZE DEVICE AND PERFORM COST ANALYSIS
	7-12	IEDIT	PRINTED OUTPUT OPTION 0-FULL EDIT FOR EACH DEVICE 1-DELETE DETAILED ELECTRICAL PARAMETERS TABLES 2-ALSO DELETE POLOIDAL FIELD COIL OUTPUT TABLES OF TRANSIENT CURRENT AND VOLTAGE DATA 3-ALSO DELETE DETAILED COST TABLE 4-SUMMARY TABLE ONLY
	13-18	JT	NUMBER OF INPUT DATA SETS TO PROCESS BELOW (MAXIMUM OF 5). NOTE THAT EACH INPUT DATA SET RESULTS IN A DEVICE FOR EVERY ITFS(I) COIL OPTION CHOSEN AND ITFN(K) NUMBER OF COILS. THEREFORE (5X5X6)=150 DEVICES CAN BE PRODUCED IN ONE RUN (SEE CARDS 27 AND 28).
	19-24	JEDIT	INPUT EDIT 0 - FULL LISTING OF INPUT VARIABLES 1 - PARTIAL LISTING THROUGH CARD 40
J VARIES FROM 1 TO JT IN CARDS 2 THROUGH 26; SO THERE WOULD BE 1 TO 5 ENTRIES ON EACH CARD.			
2	I	ISCLO(J)	NTAU SCALED/OPERATING MODE OPTION 1-YES/BEAM DRIVEN 2-YES/IGNITED 3-NO/IGNITED 4-NO/BEAM DRIVEN SEE CARD 44 FOR NTAU SCALING MODEL INPUT. IF NTAU IS NOT SCALED, IT IS EITHER FIXED BY INPUT (SEE CARD 42) OR IT IS ADJUSTED FOR ENERGY BALANCE.
3	I	IPLAO(J)	PLASMA PARAMETER VARIED TO OBTAIN ENERGY BALANCE (SEE CARD 6). 1-TAU 2-NEUTRAL BEAM POWER 3-NTAU 4-NE 5-TE SEE FIGURE 2-4 AND TABLE 2-1

CARD TYPE	FORMAT	VARIABLE	DESCRIPTION/COMMENTS
4	I	IPROO(J)	PLASMA TEMPERATURE AND DENSITY PROFILE 1-UNIFORM 2-PARABOLIC 3-OTHER SEE CARD 43 FOR INPUT, IF OTHER. SEE FIG. 2-5
5	I	IBALO(J)	PLASMA PARTICLE FLOW BALANCE 0-D^+ FUEL WITH NEUTRAL BEAMS ONLY 1-$D^+/(D^++T^+)$ SET BY INPUT (SEE CARD 33 AND 41) 2-$D^+/(D^++T^+)=0.5$
6	I	IONEO(J)	ENERGY BALANCE OPTION 0-BALANCE ACCORDING TO CARD 3 OPTION CHOSEN 1-BALANCE ACCORDING TO TAU REQUIRED, ALL ELSE FIXED 2-NO BALANCE, ONCE-THRU WITH INPUT VALUES IF IONEO≠0,IPLAO IS SET AT 1.
7	I	IDIVO(J)	DIVERTOR OPTION (SEE FIGS. 2-22 and 2-23) 0-NO DIVERTOR 1-BUNDLE 2-POLOIDAL
8	I	IECSO(J)	NEUTRAL BEAM DIRECT ENERGY CONVERSION OPTION 0-NO 1-YES
9	I	INBMGO(J)	NEUTRAL BEAM MOTOR-GENERATOR-FLYWHEEL 0-YES 1-NO (AC SWITCH AND RESISTIVE LOAD DUMP)
10	I	IFUELO(J)	OPERATION MODE FOR TREATING PLASMA EXHAUST, SEE FIGURE 2-21. 0-BATCH 1-CONTINUOUS
11	I	IPOWCO(J)	ELECTRIC POWER CONVERSION FROM HIGH GRADE HEAT PRODUCED 0-NO 1-YES
12	I	INBVIO(J)	NEUTRAL BEAM VERTICAL INJECTION MODE (FOR INFORMATION ONLY) 0-NO, HORIZONTAL IMPLIED 1-YES, SEE CARD TYPE 112
13	I	ICVPWO(J)	WASTE HEAT TREATMENT OPTION FOR BLANKET, ALL ELSE TO COOLING TOWER 0-COOLING TOWER 1-ONCE-THRU WITH DISPOSAL IN RIVER, LAKE.....

CARD TYPE	FORMAT	VARIABLE	DESCRIPTION/COMMENTS
14	I	ILSCO(J)	LOAD SMOOTHING CIRCUIT FOR NEUTRAL BEAM 0-NO 1-YES FOR IGNITION OPERATION, ILSCO=0 IS STANDARD. FOR HIGHLY BEAM DRIVEN, ILSCO=1 IS STANDARD.
15	I	ISHPO(J)	TF COIL SHAPE, SEE FIGURE 2-24. 0-D-SHAPE ACCORDING TO MOSES AND YOUNG (Ref 6) 1-CIRCULAR 2-COMPACT-D ACCORDING TO BRENNER (Ref 7)
16	I	IFLDO(J)	TF COIL MAGNETIC FIELD OPTION 0-SIZE TO MAXIMUM FIELD SET BELOW (CARD 83) IMPLIES POSSIBLE FIELD MARGIN ON PLASMA AXIS 1-SIZE TO MINIMIZE FIELD AT COIL YET ACCOMMODATE REQUIRED FIELD ON PLASMA AXIS
17	I	ISTRCTO(J)	TF COIL STRUCTURE 0-NORMAL,STRUCTURE/CONDUCTOR RATIO FIXED ACCORDING TO INPUT ON CARDS 85 AND 86 1-BOLTED,ST/CD RATIO CALCULATED BY SUBROUTINE INCORPORATING RESULTS OF DETAILED ANALYSIS OF BOLTED TFC (NO USERS' INFORMATION AVAIL.) 2-GENERAL,ST/CD RATIO CALCULATED TO ACCOMMODATE STRAIN LIMIT AND EFFECTIVENESS FACTOR OF STRUCTURAL MATERIAL. SEE CARD 96 FOR SPECIFICATIONS.
18	I	IFLTFO(J)	REQUIRED COPPER TFC CURRENT TIME PROFILE IMPACTS CHARGING TIME AND MGF SIZING. MODELS ACCOUNT FOR CURRENT IN COILS TO INCREASE FROM 0.0 TO RATED AMPERES IN THIS MANNER 0-EXPONENTIALLY 1-LINEARLY 2-LN2 COOLED TFC, THEREFORE, LITTLE RESISTIVE HEATING TO ACCOUNT FOR
19	I	INBAO(J)	EVALUATE NEUTRAL BEAM ACCESS REQUIREMENT IN SIZING OUTER LEG OF TFC 0-YES 1-NO IF NO, NB ACCESS IS IGNORED IN TF SIZING.
20	I	IREFO(J)	POLOIDAL FIELD COIL OPTION (FIGS. 2-28 and 2-29) 1-INSIDE PFC, SCALE REF SOLENOIDAL APPROXIMATION WRT OTHER DEVICE COMPONENTS 2-REF PFC SYSTEM SPECIFIED BY INDUCTANCES AND RESISTANCES, NO SCALING AT ALL 3-GENERAL, READ COIL LOCATIONS OF REF (SEE CARD 23,24).

CARD TYPE	FORMAT	VARIABLE	DESCRIPTION/COMMENTS
			4-GENERAL, READ COIL LOCATIONS AND EVALUATE SYSTEM WITH NO SCALING OF CURRENT RATIO EF/PLASMA
21	I	ICURO(J)	EQUILIBRIUM FIELD COIL CURRENTS 0-BALANCE, VECTOR SUM OF POLOIDAL AND PLASMA CURRENTS = 0.0 1-RATIO THE INSIDE, DIVERTOR, AND OUTSIDE EF COIL CURRENT PROFILES TO THE PLASMA CURRENT (SEE CARD 105).
22	I	ISELFO(J)	EF SOLENOID HEIGHTS (EFFECTIVE) 0-CALCULATE (USE INTERNAL MODEL) 1-RATIO BY FRACTION OF DIVERTOR COIL HEIGHT ABOVE MIDPLANE FOR INSIDE AND OUTSIDE EF (SEE CARD 106). ISELFO USED ONLY WHEN IREFO=1(SEE FIG. 2-29).
23	I	ILOCO(J)	EF COIL LOCATION WRT POSITION OF OTHER DEVICE COMPONENTS (FOR IREF=3 OR 4) BLANK CARD OTHERWISE (SEE FIG. 2-28) 0-INSIDE TFC 1-OUTSIDE TFC 2-FIXED LOCATION AND CURRENT
24	I	ISCEFO(J)	SUPERCONDUCTING EF 0-YES 1-NO, COPPER ASSUMED
25	I	ISCOHO(J)	SUPERCONDUCTING OH 0-YES 1-NO, COPPER ASSUMED
26	I	IDCOO(J)	DIVERTOR TYPE COIL SCALING FOR EF COILS IN "D" GROUP (FOR IREF=3) 0-NO, ONLY PRESERVE VERTICAL FIELD 1-YES, ALSO PRESERVE SPECIFIED DIVERTOR NULL

I VARIES FROM 1 TO 5 WRT TF COIL SYSTEM IN THE FOLLOWING CARD.

27	I	ITFS(I)	DEVICE AND TF COIL SYSTEMS TO BE SIZED IN THIS RUN FOR I=1 TNS WITH COPPER TFC 2 TNS WITH NbTi TFC 3 TNS WITH Nb_3Sn TFC 4 TNS WITH HYBRID TFC (COPPER INSIDE TFC, NbTi OUTSIDE TFC) 5 DEVICE WITH A BLANKET AND WITH Nb_3Sn TFC SET FLAG ITFS(I) TO CHOOSE 0-NO ANALYSIS 1-YES, ANALYZE THIS TYPE DEVICE AND COIL SYSTEM (See Reference 9)

CARD TYPE	FORMAT	VARIABLE	DESCRIPTION/COMMENTS
K VARIES FROM 1 TO 6 WRT THE NUMBER OF COILS IN TF SYSTEM IN THE FOLLOWING CARD			
28	I	ITFN(K)	NUMBER OF TF COILS TO BE CONSIDERED IN SIZING TOKAMAK FOR K=1 12 TF COILS 2 14 TF COILS 3 16 TF COILS 4 18 TF COILS 5 20 TF COILS 6 24 TF COILS SET FLAG ITFN(K) TO CHOOSE 0-NO ANALYSIS OR 1-YES, ANALYZE THIS COIL SYSTEM
	37-42	ITFNP	OVERRIDE NUMBER OF TF COILS IN MODEL 0-USE ITFN CHOICES MADE P-OVERRIDE ONE TOKEN ITFN(K)=1 WITH P COILS e.g., 21 COILS MAY BE CHOSEN TO BE SIZED AS COMPACT-D USING THE GENERAL CRITERIA FOR STRUCTURE-TO-CONDUCTOR RATIO TO ACCOMMODATE STRAIN LIMIT, ETC.
29	I		
	1-6	NINO	NUMBER OF TIME INTERVALS TO BE USED DURING IONIZATION PERIOD OF START-UP IN EVALUATING PFC CURRENT AND VOLTAGE PROFILES WRT TIME (SEE FIGURES 2-7 AND 2-8)
	7-12	NIN	NUMBER OF TIME INTERVALS DURING INITIATION PERIOD. USE 9
	13-18	NSU	NUMBER OF INTERVALS DURING START-UP PERIOD WHERE NINO + NIN + NSU + 6 $\leq$ 50.

TABLE 5-2

COAST INPUT DECK -- PLASMA AND PLASMA OPERATING DATA

Only two input formats are used. An I is entered in the format column of the table for (12I6); while an E indicates (6E12.4). For the COAST logic and calculational considerations see Figures 2-3 thru 2-6.

CARD TYPE	FORMAT	VARIABLE	DESCRIPTION/COMMENTS
J VARIES FROM 1 TO JT IN CARDS 30 THROUGH 40.			
30	E	A(J)	PLASMA MINOR RADIUS (M)
31	E	BT(J)	FIELD ON AXIS(T)
CARD TYPE 32 ONLY REPEATED FOR EACH ITFS(I) = 1 IN ASCENDING I,I=1,5 WRT TF COIL SYSTEM.			
32	E	ASP(I,J)	ASPECT RATIO(-)
33	E	EDEN(J)	MULTIPLICATIVE COEFFICIENT FOR VARYING PLASMA ELECTRON DENSITY AND CORRESPONDING ION DENSITY FOR EACH J CASE. IN GENERAL, USE 1.0 FOR EACH J.
34	E	ELG(J)	VARY ELONGATION ACROSS J. IN GENERAL, USE 1.0's.
35	E	TPL(J)	VARY PLASMA TEMPERATURE ACROSS J. IN GENERAL, USE 1.0's.
36	E	PLP(J)	VARY PULSE LENGTH ACROSS J. IN GENERAL, USE 1.0's.
37	E	PLR(J)	VARY REPETITION INTERVAL ACROSS J. IN GENERAL, USE 1.0's.
38	E	PNBM(J)	VARY NEUTRAL BEAM POWER IN BEAM-DRIVEN OPTIONS (SEE CARD 2) ACROSS J. IN GENERAL, USE 1.0's.
39	E	NA(J)	SCALING LAW PROPORTIONALITY CONSTANT (SEE CARD 44).
40	E	ABSQ(J)	BETA LIMIT CONSTANT SUCH THAT $\beta=(ABSQ/ASP)/Q^2$ (Q IS INPUT IN CARD 42)
41	E		
	1-12	TE	EFFECTIVE ELECTRON TEMPERATURE (KeV) TYPICALLY 5. TO 15.
	13-24	TI	EFFECTIVE ION TEMPERATURE (KeV) TYPICALLY 5. TO 15.
	25-36	NE	AVERAGE ELECTRON DENSITY (PARTICLE$\cdot m^{-3}$) ($\sim$1.E20)
	37-48	ND	AVERAGE DEUTERON DENSITY (PARTICLE$\cdot m^{-3}$)

CARD TYPE	FORMAT	VARIABLE	DESCRIPTION/COMMENTS
	49-60	NT	AVERAGE TRITON DENSITY (PARTICLE$\cdot m^{-3}$)
	61-72	DEL	PLASMA ELONGATION(-) 1.6 FOR TNS,DTHR.
42	E		
	1-12	NTAU	INITIAL VALUE OF ELECTRON DENSITY TIMES ELECTRON CONFINEMENT TIME,ORDER OF 1.E+20. ($s\cdot m^{-3}$)
	13-24	Q	PLASMA STABILITY FACTOR (-) USED IN DEFINING PLASMA CURRENT, ENERGY LOSSES, AND BETA. TYPICALLY 2.5 TO 3.
	25-36	BCON	BETA LIMIT CONSTANT(-) IF BCON IS NEGATIVE, BETA IS SET TO |BCON|; OTHERWISE JUST AS INDICATED FOR CARD 40.
	37-48	ZEFF	EFFECTIVE PLASMA ION CHARGE(-) TYPICALLY 1 FOR PURE PLASMA. IMPACTS NEUTRAL BEAM REQUIREMENTS AND PLASMA ENERGY RADIATION LOSSES.
	49-60	ZI	IMPURITY ION CHARGE STATE(-), e.g., 26 FOR IRON, IMPACTS PLASMA ENERGY LOSSES.
	61-72	QNBO	NEUTRAL BEAM Q FOR BEAM-PLASMA FUSION 0-CALCULATE P-SET TO POSITIVE VALUE INPUT HERE
43	E		
	1-12	XPR(1,3)	PROFILE FACTOR ON TEMPERATURE
	13-24	XPR(2,3)	PROFILE FACTOR ON NE·TE
	25-36	XPR(3,3)	PROFILE FACTOR ON SIGV
	37-48	XPR(4,3)	PROFILE FACTOR ON BREM 1.0 IMPLIES CONSTANT DISTRIBUTION ACROSS PLASMA (SEE CARD 4) (SEE FIGURE 2-6)
	49-60	EPS	STEP SIZE ON PLASMA ENERGY BALANCE ITERATION. TYPICALLY 0.01
	61-72	PCON	PARTICLE CONFINEMENT MULTIPLICATIVE CONSTANT GENERALLY 1.0, USE TO ALTER RATIO PARTICLE CONFINEMENT TIME RELATIVE TO ENERGY CONFINEMENT TIME.
44	E		
	1-12	ESC1	ESC1 THROUGH ESC6 ARE EXPONENTS ON VARIABLES IN DEFINING SCALING LAW FOR $n_e\tau_e$ SUCH THAT
	13-24	ESC2	
	25-36	ESC3	
	37-48	ESC4	
	49-60	ESC5	
	61-72	ESC6	

```
n_e τ_e = NA(J)              PROPORTIONALITY CONSTANT
        *      NF**ESC1      ELECTRON DENSITY
        *(A(J)*S)**ESC2      EFFECTIVE MINOR RADIUS
        *        Q**ESC3     SAFETY FACTOR
        *      BTF**ESC4     B FIELD ON PLASMA AXIS
        *ASP(I,J)**ESC5      ASPECT RATIO
        *      TF**ESC6      ELECTRON TEMPERATURE
```

WHERE S IS SHAPE FACTOR=0.5(1.+ELONGATION)

CARD TYPE	FORMAT	VARIABLE	DESCRIPTION/COMMENTS
45	E		
	1-12	TTIO	TIME TO COMPLETE PLASMA IONIZATION(s) SEE FIGURES 2-7 AND 2-8
	13-24	TTI	TIME TO COMPLETE PLASMA INITIATION(s)
	25-36	TTSU	TIME TO COMPLETE PLASMA START-UP(s)
	37-48	THEAT	TIME FROM START OF NB TO STEADY STATE(s)
	49-60	PULSE	STEADY STATE BURN TIME(s)
	61-72	TDOWN	PULSE DOWN TIME(s)
46	E		
	1-12	TINB	MAXIMUM TIME TO OPERATE NB FOR POWER ADVANTAGE GENERALLY TINB=TNB (CARD 47)
	13-24	TFRNB1	RATIO OF FIRST TIME SEGMENT OF NEUTRAL BEAM INJECTION OVER TOTAL TIME OF NBI. SEE FIGURE 2-7
	25-36	TFRNB2	RATIO OF INTERMEDIATE TIME SEGMENT OF NEUTRAL BEAM INJECTION OVER TOTAL TIME OF NBI. IMPLIES THAT RATIO FOR FINAL TIME SEGMENT OF NBI IS (1.-TFRNB1-TFRNB2)
	37-48	TFCT	RATIO OF START TO TOTAL EXCURSION TIME. SEE FIGURE 2-7
	49-60	EFR	TOTAL ENERGY RELEASE PER FUSION EVENT ACCOUNTING FOR SECONDARY REACTIONS IN SHIELD (MeV)
	61-72	RLI	PLASMA INTERNAL INDUCTANCE TERM USED TO REFLECT GEOMETRIC PROFILE OF CURRENT 0.0-SKIN CURRENT 0.5-UNIFORM DISTRIBUTION 0.9167-PEAKED DISTRIBUTION
47	E		
	1-12	PRV1	PLASMA RESISTIVITY DURING HEATING ($\mu\Omega\cdot m$)
	13-24	PRV2	PLASMA RESISTIVITY DURING STEADY STATE BURN ($\mu\Omega\cdot m$)
	25-36	PNB	NEUTRAL BEAM POWER FACTOR (MW) (COUPLED WITH PNBM IN CARD 38, THE NEUTRAL BEAM POWER CAN BE VARIED ACROSS J DEVICES AND IS FOR BEAM-DRIVEN OPTIONS ONLY)
	37-48	ENB	REFERENCE NEUTRAL BEAM ENERGY (keV) IF ENB IS ENTERED AS A NEGATIVE NUMBER, THE NEUTRAL BEAM ENERGY IS FIXED TO THE ABSOLUTE VALUE OF THAT NEGATIVE NUMBER
	49-60	TNB	PULSE DURATION FOR NEUTRAL BEAM DURING PLASMA START-UP(s) (SEE FIGURE 2-7)
	61-72	NAZCON	NEUTRAL BEAM ENERGY SCALING IS DIRECTLY PROPORTIONAL TO ION DENSITY, MINOR RADIUS AND Zeff OF PLASMA, e.g., n_e a Zeff=3.E+20 FOR 350 keV, WHERE ENB=350

CARD TYPE	FORMAT	VARIABLE	DESCRIPTION/COMMENTS
48	E		
	1-12	TEIL	PLASMA STARTING TEMPERATURE LIMIT (eV). MESSAGE PRINTED IF TEMPERATURE NOT ACHIEVED BY PLASMA DURING IONIZATION.
	13-24	TCONST	STARTING CONFINEMENT FACTOR(-). FACTOR IN DETERMINING PLASMA TEMPERATURE DURING IONIZATION.
	25-36	FIDR	FRACTION OF I^2R LOST DURING IONIZATION. THE BALANCE CONTRIBUTES TO HEATING OF PLASMA.
	37-48	TEIN	PLASMA INITIATION TEMPERATURE (eV) AT THE END OF OHMIC HEATING PERIOD
	49-60	FCTR	FLUX CONSERVING TOKAMAK CURRENT RATIO TO NON-FCT MODE(-) SCALED BY β TO GET EFFECTIVE RATIO OF FCT/NON-FCT CURRENT, i.e., $\text{FCTR}\ \frac{\beta-0.012}{0.15-0.012}$
	61-72	PNBH	NEUTRAL BEAM POWER REQUIRED FOR HEAT-UP OF PLASMA (MW). IF ENTERED AS NEGATIVE NUMBER, THE ABSOLUTE OF THE VALUE ENTERED WILL OVERRIDE START-UP BEAM POWER CALCULATED DURING HEAT-UP PHASE; OTHERWISE, NB POWER IS PROPORTIONAL TO $R_o \cdot T_i$ AND PNBH IS A PROPORTIONALITY CONSTANT
49	E		
	1-12	QIN	STABILITY FACTOR DURING INITIATION(-). IMPACTS PLASMA INITIATION CURRENT AND PLASMA TEMPERATURE
	13-24	AK	RATIO OF START-UP PLASMA RADIUS TO FINAL RADIUS, a(J), DURING STEADY STATE(-). AK=1 IMPLIES A FULL RADIUS START-UP
	25-36	RESTY	SPITZER RESISTIVITY CONSTANT ($\mu\Omega \cdot m \cdot eV^{1.5}$).
	37-48	EO	PLASMA BREAKDOWN FIELD ($V \cdot m^{-1}$)
	49-60	IPSU	PLASMA CURRENT RATIO (NON-FCT/CURRENT AT END OF START-UP PERIOD) (-)
	61-72	IPSU2	RATE OF CHANGE IN PLASMA CURRENT DURING NEUTRAL BEAM INJECTION (IPSU+IPSU2=1.0) DUE TO FLUX CONSERVATION AT HIGH-BETA, THE PLASMA MAY UNDERGO A CURRENT CHANGE DURING NB HEATING. IPSU+IPSU2 ALLOW THE CHANGE TO BE TAILORED (SEE FIG. 2-7). GENERALLY IPSU=1, IPSU2=0

TABLE 5-3

COAST INPUT DECK -- DEVICE OPERATING DATA

Only two input formats are used. An I is entered in the format column of the table for (12I6); while an E indicates (6E12.4).

CARD TYPE	FORMAT	VARIABLE	DESCRIPTION/COMMENTS
50	E		
	1-12	REP	PULSING CYCLE LENGTH(s)
	13-24	PULST	FLAT-TOP TIME FOR Cu TF(s)
	25-36	AFPP	ANNUAL NUMBER OF FULL D-T POWER PULSES(-)
	37-48	TFPP	TOTAL NUMBER OF FULL D-T POWER PULSES DURING DEVICE LIFETIME(-) USED TO CALCULATE THE RADIATION DOSE TO COILS
51	E		
	1-12	OHRD	OPERATING HOURS PER DAY
	13-24	ODAYW	OPERATING DAYS PER WEEK
	25-36	DTIM	FRACTION OF SCHEDULED OPERATING HOURS IN DOWN TIME

TABLE 5-4

COAST INPUT DECK -- TOKAMAK SIZING PARAMETERS

Only two input formats are used. An I is entered in the format column of the table for (12I6); while an E indicates (6E12.4).

CARD TYPE	FORMAT	VARIABLE	DESCRIPTION/COMMENTS
5-4.1 VACUUM VESSEL SYSTEMS			
52	E		
	1-12	VWO	VACUUM VESSEL THICKNESS COEFFICIENT(m)
	13-24	VWE	VACUUM VESSEL THICKNESS EXPONENT TERM(-), i.e., VV ZONE THICKNESS = VWO*A(J)**VWE
	25-36	DLL	PLASMA LINER/LIMITER SPACE(m)
	37-48	SLL	FRACTIONS OF VACUUM VESSEL SURFACE OCCUPIED BY LINER/LIMITER STRUCTURE AND/OR MATERIAL(-), e.g., SLL = 0.25 FOR TNS
	49-60	SFVV	SOLID FRACTION OF VACUUM VESSEL(-). USED TO ACCOUNT FOR COOLANT CHANNEL, ETC AND IN EVALUATING MASS OF VACUUM VESSEL.
	61-72	EF	COEFFICIENT FOR CALCULATING EFFECTIVE VACUUM VESSEL SURFACE AREA(-), e.g., ACCOUNT FOR BELLOWS. EF = 1, IMPLIES NO BELLOWS.
53	E		
	1-12	PPER	FRACTION OF TOTAL FUSION POWER DEPOSITED IN THE VACUUM VESSEL(-) BY NEUTRONS. BALANCE HANDLED IN BLANKET AND SHIELD COMPONENTS.
	13-24	SPUMP	VACUUM VESSEL AREA PER HIGH VACUUM PUMP UNIT (m^2). USED IS ESTIMATING NUMBER OF PUMPING STATIONS.
	25-36	SPS	SPECIFIC PUMPING SPEED AT THE TORUS OF HIGH VACUUM PUMPS PER UNIT AREA ($L \cdot s^{-1} \cdot m^{-2}$). USED IN COSTING THE VACUUM SYSTEM.
	37-48	DDIV	POLOIDAL DIVERTOR VERTICAL SPACE REQUIRED (m) USED IF IDIVO(J) = 2 FOR SOME J; OTHERWISE, VARIABLE IGNORED. IMPACTS TFC VERTICAL SIZING.
	49-60	WDIV	DIVERTOR HORIZONTAL SPACE REQUIRED(m). USED IF IDIVO(J) = 2 FOR SOME J; OTHERWISE IGNORED. USED TO CALCULATE APPROXIMATE SURFACE AREA OF POLOIDAL DIVERTOR COMPONENT. (SEE FIG. 2-13)
	61-72	ARDIV	DIVERTOR CROSS-SECTIONAL AREA (m^2). USED TO CALCULATE VOLUME OF POLOIDAL DIVERTOR.

CARD TYPE	FORMAT	VARIABLE	DESCRIPTION/COMMENTS

5-4.2 BUNDLE DIVERTOR PARAMETERS (SEE FIGURE 2-22)

54	E		IF IDIVO(J)=1 FOR SOME J, THEN COMPLETE CARD 54, OTHERWISE, BLANK CARD
	1-12	DVCRO	COMPOUND PUMP AREA FOR BUNDLE DIVERTOR (m^2) HANDLES HYDROGEN AND INERT He GASES
	13-24	DVZA	TARGET PUMP AREA OF BUNDLE DIVERTOR ($m^2 \cdot MW^{-1}$) HANDLES THERMAL LOAD IN BUNDLE DIVERTOR
	25-36	DVSV	SECONDARY VACUUM SYSTEM PUMPING SPEED ($\ell \cdot s^{-1}$) PUMP EMPLOYED IN VACUUM START-UP AND REGENERATION OF COMPOUND PUMPING SYSTEM
55	E		IF IDIVO(J)=1 FOR SOME J, COMPLETE CARD 55, OTHERWISE, BLANK CARD
	1-12	DVHT	BUNDLE DIVERTOR CHAMBER HEIGHT(m)
	13-24	DVWT	BUNDLE DIVERTOR CHAMBER WIDTH(m)
	25-36	DVDT	BUNDLE DIVERTOR CHAMBER DEPTH(m)
	37-48	DVWA	BUNDLE DIVERTOR CHAMBER WALL THICKNESS(m)
56	E		
	1-12	PPERA	PERCENTAGE OF ALPHA POWER TO WALL TO BE HANDLED BY DIVERTOR (%) (OBSOLETE VARIABLE)
	13-24	FJW	WALL LOADING FACTOR(-) USED TO ACCOUNT FOR INCREASED WALL LOADING IN DTHR DUE TO BACKSCATTER FROM BLANKET INTERACTIONS. FOR DTHR ESTIMATED TO BE 1.1. IMPACTS SIZING OF SHIELD COMPONENTS NEAREST THROAT OF TORUS.

IF IDIVO(J) = 1 FOR SOME J INCLUDE FOLLOWING CARDS; OTHERWISE, SKIP TO CARD TYPE 65. (SEE FIGURE 2-22 FOR GEOMETRY)

57	I		
	1-6	IOPR	BUNDLE DIVERTOR DEFINITION OPTION 0-DETAILED MODEL, IMPACTS CARDS 60,61,62 1-GENERAL MODEL (USE IOPR=1)
	7-12	IBDP	BUNDLE DIVERTOR PRINT OPTION (OBSOLETE VARIABLE)
	13-18	ICBD	CLEARANCE OPENING OPTION 0-NO MINIMUM REQUIREMENT 1-DOPR MINIMUM CLEARANCE (SEE CARD 64) (USE ICBD=0)
58	E		
	1-12	BTNR	REFERENCE NULL B-FIELD(T) TO BE CANCELLED BY DIVERTOR FIELD

CARD TYPE	FORMAT	VARIABLE	DESCRIPTION/COMMENTS
	13-24	CBDR	REFERENCE BUNDLE DIVERTOR COIL CURRENT(MA·TURN)
	25-36	DNULL	RADIAL DISTANCE FROM NULL TO VACUUM VESSEL(m)
	37-48	CDEN	CONDUCTOR CURRENT DENSITY(MA·m^{-2})
	49-60	DDWB	BUNDLE DIVERTOR DEWAR SPACE(m)
	61-72	DDWBT	BD DEWAR WALL THICKNESS(m)
59	E 1-12	DSH1	THICKNESS OF BD SHIELD 1 FACING DIVERTED PLASMA EXHAUST(m). SEE FIGURE 2-22
	13-24	DSH2	THICKNESS OF BD SHIELD 2
	25-36	DSH3	THICKNESS OF BD SHIELD 3
	37-48	DELBD	BUNDLE DIVERTOR COIL ELONGATION(-).
	49-60	DAGBD	ACCESS GAP THICKNESS(m). SEE FIGURE 2-22
	61-72	TBD	ANGLE OF DIVERTOR COIL(DEG). SEE FIGURE 2-22
IF IOPR = 1, CARDS 60,61,62 CAN BE BLANK BUT MUST STILL BE INCLUDED IN DECK			
60	E	(WBD(L), L = 1,5)	COIL BOBBIN LENGTH(m)
61	I	(NBD(L) L = 1,5)	NUMBER OF BOBBINS PER SECTION(-)
62	I	(NTPB(L), L = 1,5)	NUMBER OF TURNS PER BOBBIN(-)
63	E 1-12	WBOB	BOBBIN WIDTH(m)
	13-24	WBD1	COIL THICKNESS AT FRONT END(m)
	25-36	WBD2	COIL THICKNESS AT BDL2(m)
	37-48	BDL2	COIL RADIAL THICKNESS(m)
	49-60	TARBD	CROSS-SECTIONAL AREA OF EACH TURN(m^2)
	61-72	SCBD	BD COIL STRUCTURE TO CONDUCTOR RATIO(-)
64	E 1-12	DOPR	DIVERTOR CLEARANCE REQUIRED FOR PLASMA CHANNEL(m)

CARD TYPE	FORMAT	VARIABLE	DESCRIPTION/COMMENTS

5-4.3 SHIELDING SYSTEM (SEE REFERENCE 12)

65	E		
	1-12	SHLDC1	MULTIPLICATIVE CONSTANT IN SIZING THICKNESS OF INNER SHIELD REGION(ΔSI). SEE REFERENCE 12, PAGE 3-9 FOR MODEL. USE 0.08095. IF A NEGATIVE VALUE IS ENTERED, THE SIZING CALCULATION IS IGNORED AND ΔST IS FIXED TO THE ABSOLUTE VALUE OF THE NEGATIVE ENTRY.
	13-24	SHLDC2	MULTIPLICATIVE CONSTANT IN ARGUMENT OF NATURAL LOG FUNCTION IN SIZING MINIMUM SHIELD THICKNESS OF SHIELD (ΔST) FOR SUPERCONDUCTING TFC. USE 14.6.
	25-36	SHLDC3	MULTIPLICATIVE CONSTANT IN ARGUMENT OF NATURAL LOG FUNCTION IN SIZING OF INNER SHIELD(ΔSI). USE 5.6E+5.
	37-48	SHLDC4	MULTIPLICATIVE CONSTANT IN SIZING MINIMUM SHIELD THICKNESS ΔST FOR SUPER CONDUCTING TFC. USE 0.08095. IF A NEGATIVE VALUE IS ENTERED, THE SIZING CALCULATION IS IGNORED AND ΔST IS FIXED TO THE ABSOLUTE VALUE OF THE NEGATIVE ENTRY.
	49-60	DST2	TOTAL SHIELD THICKNESS(m). ACCOUNTS FOR DISCONTINUITY IN OUTER SHIELD DUE TO ENGINEERING DESIGN IN CALCULATING SHIELD VOLUME. SETS MINIMUM THICKNESS FOR SHIELD BETWEEN TF COILS
	61-72	DPB	LEAD SHIELD THICKNESS(m)
66	E		
	1-12	WLL	WALL LOADING LIMIT($MW \cdot m^{-2}$) MESSAGE PRINTED IF EXCEEDED.
	13-24	PNTF	TF MAXIMUM TIME AVERAGED NUCLEAR HEATING RATE (kW) USED IS CALCULATING SHIELDING THICKNESS.
	25-36	DEF	EF COIL INSULATION MAXIMUM ALLOWABLE DOSE(RAD). USED IN CALCULATING SHIELDING THICKNESS.
	37-48	DENSH	SHIELD DENSITY($kg \cdot m^{-3}$) USED IN CALCULATING SHIELD MASS.
	49-60	DENB	BLANKET DENSITY($kg \cdot m^{-3}$) USED IN CALCULATING BLANKET MASS.
	61-72	FNEUI	FRACTION OF NEUTRON POWER DEPOSITED IN INNER SHIELD(-) APPLIES IF I = 5, TYPICALLY 0.333.

IF ITFS(5) = 1 INCLUDE THE FOLLOWING CARDS; OTHERWISE, SKIP TO CARD TYPE 79.

CARD TYPE	FORMAT	VARIABLE	DESCRIPTION/COMMENTS
5-4.4	BLANKET SYSTEM (SEE FIGURES 2-18 AND 2-19)		
67	E	(TOUT(L), L = 1,6)	REGION THICKNESS(m) FOR UP TO SIX REGIONS IN OUTER BLANKET/SHIELD LOCATION. IN GENERAL, SPACE IS ALLOWED FOR THE FOLLOWING SIX GENERAL REGIONS, BUT THESE ARE SUBJECT TO THE USER'S REDEFINITION. L=1-STRUCTURE 2-FUEL BREEDING 3-TRITIUM BREEDING 4-REFLECTOR 5-SHIELD 6-MANIFOLD SEE FIGURE 2-18
68	E	(DGAP(L), L = 1,6)	REGION VERTICAL GAP ALLOWED(m). IMPACTS SIZING OF TFC WITHOUT CONTRIBUTING TO VOLUME (AND MASS) OF ZONE IN COSTING MODEL (SEE FIG. 2-18)
69-74	E	(VFOBS (L,M), M=1,6), L=1,6)	VOLUME FRACTION OF BLANKET/SHIELD MATERIALS. MAXIMUM OF SIX MATERIALS PER REGION. ENTER ONE CARD PER REGION FOR SIX REGIONS. SEE CARD TYPE 151 FOR COSTS. MAINTAIN CONSISTENCY IN MATERIAL ASSIGNMENT WITH RESPECT TO COST COEFFICIENTS.
75	E	(POWM(L), L=1,6)	POWER MULTIPLIER BY B/S REGION(-). ENTER 1.0 IF NONPOWER PRODUCING; ENTER > 1.0 TO REFLECT MULTIPLICATION IN BREEDING BLANKETS AND RADIATION SHIELDING.
76	E		
	1-12	AMU	ATOMIC WEIGHT OF FISSILE FUEL(AMU)
	13-24	FAPFN	NUMBER OF FISSILE ATOMS PRODUCED PER FUSION NEUTRON ENTERING BLANKET(-)
	25-36	WCFF	WALL COVERAGE FRACTION OF FISSILE ZONE(-). IF WCFF=1, THE FRACTION OF NEUTRONS ENTERING THE BLANKET IS (1-FNEUI)
	37-48	TAPFN	NUMBER OF TRITONS PRODUCED PER FUSION NEUTRON ENTERING BLANKET(-)
	49-60	WCFT	WALL COVERAGE FRACTION OF TRITIUM BREEDING ZONE(-). IF WCFT=1, THE FRACTION OF NEUTRONS ENTERING THE TRITIUM BREEDING BLANKET IS FNEUI.
	61-72	PPM	PEAK-TO-AVERAGE POWER MULTIPLIER(-). USED IN SIZING THE BLANKET HEAT EXCHANGERS AND HEAT DISSIPATION SYSTEMS. NOT USED IN OBTAINING ELECTRICAL OUTPUT FROM BLANKET.

CARD TYPE	FORMAT	VARIABLE	DESCRIPTION/COMMENTS
77	I		
	1-6	IB	ZONE NUMBER OF FISSILE BLANKET($1 \leq IB \leq 6$)
	7-12	ISH	ZONE NUMBER OF SHIELD REGION($IB < ISH \leq 6$)
78	E		
	1-12	TCVEFF	FOR BLANKET TURBOGENERATOR POWER CONVERSION EFFICIENCY(-), e.g., 0.9.
	13-24	TCEFF1	FOR BLANKET, CONSTANT IN LINEAR EQUATION FOR OVERALL THERMODYNAMIC CYCLE EFFICIENCY FOR STEAM GENERATOR AS IN ηo = TCEFF1+TCEFF2*TC WHERE TC IS WORKING FLUID TEMPERATURE FOR BLANKET. SEE REFERENCE 13
	25-36	TCEFF2	FOR BLANKET, COEFFICIENT DESCRIBED ABOVE
	37-48	TEMPC	TEMPERATURE OF WORKING FLUID IN BLANKET(K)
	49-60	QLTH	HEAT EXCHANGED IN PREHEATERS (kW)
79	E		
	1-12	TCET	ALL OTHER SYSTEMS, TURBOGENERATOR POWER CONVERSION EFFICIENCY(-)
	13-24	TCE1	ALL OTHER SYSTEMS, CONSTANT IN LINEAR EQUATION FOR OVERALL THERMODYNAMIC EFFICIENCY FOR STEAM GENERATORS AS IN ηo = TCE1+TCE2*TCMIN (OR TC,system)
	25-36	TCE2	ALL OTHER SYSTEMS, COEFFICIENT DESCRIBED ABOVE
	37-48	TCMIN	MINIMUM TEMPERATURE OF WORKING FLUID FOR USE IN ELECTRIC POWER CONVERSION SYSTEM(K) USED IF IPOWC.EQ.1; IGNORED OTHERWISE.
80	E		
	1-12	TCDIV	TEMPERATURE OF DIVERTOR COOLANT(K)
	13-24	TCVV	TEMPERATURE OF VACUUM VESSEL COOLANT(K)
	25-36	TCSH	TEMPERATURE OF SHIELD COOLANT(K)
	37-48	TCSHB	TEMPERATURE OF OUTER SHIELD COOLANT(K)
	49-60	TCNB	TEMPERATURE OF NEUTRAL BEAM DUMP COOLANT(K)

CARD TYPE	FORMAT	VARIABLE	DESCRIPTION/COMMENTS

5-4.5 TF COIL SYSTEM (SEE FIGURE 2-26)

I VARIES FROM 1 TO 5 WRT TF COIL SYSTEM IN THE FOLLOWING CARDS THROUGH CARD 95.

81	E	PF(I)	TF COIL PACKING FACTOR(-) FOR THE TF COILS TO ACCOUNT FOR INSULATION AND COOLANT HOLES IN CONDUCTOR MATRIX AND USED IN CALCULATING THE CONDUCTOR MASS AND VOLUME
82	E	EP(I)	PERCENT RIPPLE (% PEAK TO AVERAGE) ON INNER LEG OF S/C TFC TO ACCOUNT FOR DISCONTINUITY OF CONDUCTOR DUE TO DEWAR, ETC. IMPACTS TFC SIZING SINCE THE MAXIMUM FIELD AT THE TFC INNER SURFACE IS ADJUSTED TO ACCOUNT FOR THIS FACTOR.
	61-72	EPCU	PERCENT RIPPLE ON INNER LEG OF HYBRID COPPER COIL OF TNS-5.
83	E	BCM(I)	MAXIMUM ALLOWABLE FIELD AT INNER SURFACE OF INNER LEG OF TFC(T)
	61-72	BCUP	MAXIMUM ALLOWABLE FIELD OF INNER SURFACE OF INNER LEG OF COPPER HYBRID TFC OF TNS-5(T).
84	E	CD(I)	CURRENT DENSITY IN TFC OVER CONDUCTOR AREA ($MA \cdot m^{-2}$)
	61-72	CDCU	CURRENT DENSITY IN TFC FOR COPPER HYBRID COIL OF TNS-5 ($MA \cdot m^{-2}$)
85	E	SUP(I)	FOR Cu TFC: RATIO OF AREA OF INSULATION PLUS COOLANT HOLES TO AREA OF CONDUCTOR(-). IF (ISTRUCT·EQ.0) FOR S/C TFC: RATIO OF AREA OF STRUCTURE TO AREA OF CONDUCTOR WHERE INSULATION AND COOLANT HOLES ARE INCLUDED IN STRUCTURE AREA(-)
	61-72	SUPCU	RATIO OF AREA OF INSULATION PLUS COOLANT HOLES TO AREA OF CONDUCTOR FOR COPPER HYBRID COIL OF TNS-5(-)
86	E	SUP1(I)	COEFFICIENT IN EXPRESSION TO CALCULATE AREA OF STRUCTURE TO CONDUCTOR FOR COPPER COILS. ACCOUNTS FOR COIL DIMENSION AND HOOP STRESS.

CARD TYPE	FORMAT	VARIABLE	DESCRIPTION/COMMENTS
			SEE REFERENCE 1, p. 3-26. USE 0.594 FOR S/C TFC, USE 0.0
	61-72	SUPCU1	COEFFICIENT FOR COPPER HYBRID TFC OF TNS-5 USE 0.594.
87	E	PRIP(I)	PERCENT RIPPLE (% PEAK-TO-PEAK) ON OUTER EDGE OF PLASMA
88	E	TFCUR(I)	CURRENT PER TFC TURN ($MA \cdot Turn^{-1}$)
89	E	TFTPB(I)	NUMBER OF TURNS PER BOBBIN FOR TFC (-)
90	E	TFCPS(I)	NUMBER OF CONDUCTORS PER SLOT FOR TFC(-)
91	E	APLN2(I)	LIQUID NITROGEN REFRIGERATION LOAD ($MW \cdot m^{-2}$)
92	E	PP(I)	IDEAL He PUMPING POWER ($kW \cdot CONDUCTOR^{-1} \cdot m^{-1}$)
93	E	DTBATH(I)	TEMPERATURE DIFFERENCE BETWEEN TFC AND BATH (K)
94	E	QACKJ(I)	SUPERCONDUCTING AC LOSSES PER PULSE (KJ) FOR Cu, USE 0.0
95	E	ASACF(I)	STRUCTURE TO CONDUCTOR MULTIPLICATIVE MODIFIER (-). USUALLY 1.0 FOR S/C TFC
96	E		
	1-12	FHMAX	RATIO OF HEIGHT OF STRAIGHT SECTION OF INSIDE LEG TO MAXIMUM HEIGHT OF COMPACT BRENNER COIL (-) USUALLY 0.0 (i.e., NO STRAIGHT SECTION)
	13-24	STLTF	STRAIN LIMIT FRACTION FOR S/C TFC(-). IMPACTS CALCULATION OF AREA OF STRUCTURE TO CONDUCTOR RATIO IF INSTRCTO(J).EQ.2; SEE CARD 17.
	25-36	EASAC	EFFECTIVENESS FACTOR FOR S/C TFC STRUCTURE TO HANDLE STRAIN(-). FUNCTION OF STRUCTURAL WEB THICKNESS. IF EASAC=1.0, STRUCTURE IS 100% EFFECTIVE; GENERALLY EASAC<1.0
	37-48	YM	YOUNG'S MODULUS FOR TFC CONDUCTOR ($MN \cdot m^{-2}$)

CARD TYPE	FORMAT	VARIABLE	DESCRIPTION/COMMENTS
	49-60	EPSTF	ε, INCREMENTAL STEPS IN ROUTINE OF SIZING COMPACT BRENNER COIL. USE 0.005
	61-72	TCLM	S/C TF COIL TEMPERATURE(K) 0-CALCULATE (SEE FIGURE 2-27) P-SET EQUAL TO POSITIVE ENTRY
97	E 1-12	DDW	TOTAL WIDTH OF DEWAR STRUCTURE OUTSIDE TFC(m)
	13-24	DDWS	SPACE BETWEEN DEWAR VACUUM SHELL AND TFC(m)
	25-36	DDWT	THICKNESS OF DEWAR VACUUM SHELL WALL(m)
	37-48	STLIM	DESIGN STRESS FOR COPPER TFC(MPa)
	49-60	RFREQM	MOTOR-GENERATOR SET MAXIMUM RATED FREQUENCY(HZ)
	61-72	RFIX	MINIMUM RADIUS OF NEUTRAL AXIS OF TFC OUTER LEG(m) IF RFIX IS NEGATIVE, IT REPRESENTS THE MINIMUM RADIAL DISTANCE FROM THE PLASMA CENTERLINE TO THE NEUTRAL AXIS OF TFC OUTER LEG(m)
98	E 1-12	G	I^2R DROP/FORCING VOLTAGE FOR COPPER TFC(-) WITH THE INDUCTIVELY STORED ENERGY, G, DETERMINES THE ENERGY LOSS DURING CHARGING OF TFC (EXPONENTIALLY). THIS LOSS IS ONE COMPONENT OF THE ENERGY DEMAND ON THE FLYWHEEL.
	13-24	F	MINIMUM FLYWHEEL SPEED OVER MAXIMUM RATED SPEED(-)
	25-36	TCS	CHARGING TIME FOR S/C TFC(S)
	37-48	TCC	CHARGING TIME FOR Cu TFC(S)
	49-60	PULSM	PULSE RATING MULTIPLIER TO EVALUATE FLYWHEEL EFFECT SUPPLIED BY GENERATOR FOR COPPER TFC. FOR DTHR, USE 2.0
	61-72	SPMUL	SPEED MULTIPLIER FOR OVERSPEED TO EVALUATE FLYWHEEL EFFECT SUPPLIED BY GENERATOR FOR Cu TFC. FOR DTHR, USE 1.3

CARD TYPE	FORMAT	VARIABLE	DESCRIPTION/COMMENTS
5-4.6 PF COIL SYSTEM (INCLUDE CARDS 102, 103, AND 104 ONLY IF IREFO=2 (ON CARD 20)			
99	E		
	1-12	DEFI	INSIDE EF COIL REGION THICKNESS FACTOR(-). IF DEFI NEGATIVE, SEE DEFO DESCRIPTION
	13-24	DEFO	OUTSIDE EF COIL REGION THICKNESS FACTOR(-). SEE REF 12, USE 0.285. IF DEFO IS NEGATIVE, OUTSIDE EF REGION THICKNESS EQUALS |DEFO|. IF ILOCO(J) EQUALS 1, DEFO=0.0. THE SAME USAGE ALSO APPLIES TO DEFI.
	25-36	HSLIM	OH COIL HOOP STRESS LIMIT(MPa)
	37-48	JLIM	OH CURRENT DENSITY LIMIT($MA \cdot m^{-2}$)
	49-60	OHCUR	OH CURRENT PER TURN(MA)
	61-72	EFCD	EF CURRENT DENSITY($MA \cdot m^{-2}$)
100	E		
	1-12	BOHMAX	MAXIMUM ALLOWABLE OH FIELD(T)
101	E		
	1-12	ABLIM	MAXIMUM RATIO OF OH INSIDE RADIUS TO OH OUTSIDE RADIUS ALLOWED(-). CONTROLS HOW THIN THE COILS MAY SIZE
	13-24	RBLL	LOWER LIMIT ON OH INNER BORE RADIUS(m)
	25-36	POIS	POISSON'S RATIO FOR OH COIL MATERIAL, USE 0.3
	37-48	DDWSP	IF EF IS S/C, EF COIL DEWAR SPACE(m)
	49-60	DDWTP	IF EF IS S/C, EF DEWAR WALL THICKNESS(m) IF IREF≠2 SKIP TO CARD 105
102	E		
	1-12	OHL	OH SELF-INDUCTANCE ($\mu H \cdot N^{-2}$) WHERE N IS THE NUMBER OF TURNS
	13-24	OHM	OH MUTUAL INDUCTANCE WITH PLASMA($\mu H \cdot N^{-2}$)
	25-36	OHR	OH COIL RESISTANCE($\mu\Omega \cdot N^{-2}$)
	37-48	OHI	OH-EFI MUTUAL($\mu H \cdot N^{-2}$)

CARD TYPE	FORMAT	VARIABLE	DESCRIPTION/COMMENTS
	49-60	OHD	OH-EFD MUTUAL($\mu H \cdot N^{-2}$)
	61-72	OHO	OH-EFO MUTUAL($\mu H \cdot N^{-2}$)
103	E		
	1-12	EFIL	EFI SELF-INDUCTANCE($\mu H \cdot N^{-2}$)
	13-24	EFIR	EFI RESISTANCE($\mu\Omega \cdot N^{-2}$)
	25-36	EFDL	EFD SELF-INDUCTANCE($\mu H \cdot N^{-2}$)
	37-48	EFDR	EFD RESISTANCE($\mu\Omega \cdot N^{-2}$)
	49-60	EFOL	EFO SELF-INDUCTANCE($\mu H \cdot N^{-2}$)
	61-72	EFOR	EFO RESISTANCE($\mu\Omega \cdot N^{-2}$)
104	E		
	1-12	EFM(1)	EFI-EFD MUTUAL($\mu H \cdot N^{-2}$)
	13-24	EFM(2)	EFI-PLASMA MUTUAL($\mu H \cdot N^{-2}$)
	25-36	EFM(3)	EFI-EFO MUTUAL($\mu H \cdot N^{-2}$)
	37-48	EFM(4)	EFD-PLASMA MUTUAL($\mu H \cdot N^{-2}$)
	49-60	EFM(5)	EFD-EFO MUTUAL($\mu H \cdot N^{-2}$)
	61-72	EFM(6)	PLASMA-EFO MUTUAL($\mu H \cdot N^{-2}$)
105	E		
	1-12	OHFAC	NORMALIZATION FACTOR FOR OH RESISTANCE(-) ALLOWS FOR UNCERTAINTY OR MARGIN. OHFAC$\geq$1.0
	13-24	BIAS	OH CURRENT BIAS WRT TO SWING THROUGH 0.0 CURRENT. 0.5 IMPLIES THAT DURING A PULSE THE MAXIMUM ABSOLUTE MAGNITUDE OF THE OH NEGATIVE CURRENT IS EQUAL TO THE MAXIMUM POSITIVE CURRENT
	25-36	CREFI	RATIO OF INSIDE EF COIL GROUP CURRENT TO THE PLASMA CURRENT(-) (SEE FIGURE 2-29)
	37-48	CREFD	RATIO OF POLOIDAL DIVERTOR REGION EF COIL GROUP CURRENT TO THE PLASMA CURRENT(-)
	49-60	CREFO	IF ICURO(J) EQUALS 1, RATIO OF OUTSIDE EF COIL GROUP CURRENT TO THE PLASMA CURRENT(-)

CARD TYPE	FORMAT	VARIABLE	DESCRIPTION/COMMENTS
	61-72	EFFAC	NORMALIZATION FACTOR FOR EF COIL GROUP, SELF-INDUCTANCE CALCULATION, USE 1.0
106	E		
	1-12	FHEFI	IF ISELFO(J) EQUALS 1, FOR SOME j, HEIGHT FRACTION OF EF INSIDE COIL EFFECTIVE SOLENOID HEIGHT TO DIVERTOR EF COIL GROUP HEIGHT(-)
	13-24	FHEFO	IF ISELFO(J) EQUAL 1, FOR SOME j, HEIGHT FRACTION OF EF OUTSIDE COIL EFFECTIVE SOLENOID HEIGHT TO DIVERTOR EF COIL GROUP HEIGHT(-)
	25-36	PVFG	PF PEAK VOLTAGE FROM GROUND(V)
	37-48	FPF	POLOIDAL FIELD COIL FLYWHEEL SPEED RATIO(-)
	49-60	TAREA	CROSS-SECTIONAL AREA PER EF COIL TURN(m^2)
	61-72	SAPF	STRUCTURE FOR ACCESS IN PF COILS(-)
107	E		
	1-12	SFEF	STACKING FACTOR FOR EF
	13-24	SCEF	IF ISCEFO(J)=1, FOR SOME j, STRUCTURE FACTOR FOR EF
	25-36	SFOH	STACKING FACTOR FOR OH
	37-48	SCOH	IF ISCOHO(J)=1, FOR SOME j, STRUCTURE FACTOR FOR OH(-)
	49-60	RRR	REFERENCE PLASMA RADIUS FOR SCALING PF COIL CURRENTS, IF IREFO(j)=3 FOR SOME J.
	61-72	DEFOS	CLEAR SPACING BETWEEN EF AND TF COILS OUTER EDGE(m) (SEE FIGURE 2-30)
108	E		
	1-12	RBETA	REFERENCE POLOIDAL BETA FOR USE IN SCALING PF COIL CURRENTS IF IREFO(J)=3 FOR SOME j
	13-24	RASP	REFERENCE ASPECT RATIO FOR USE IN SCALING PF CURRENTS IF IREFO(J)=3 FOR SOME j
	25-36	RNULP	RADIUS OF REFERENCE NULL OUT OF MIDPLANE FOR USE IN SCALING DIVERTOR-LIKE PF COILS, IF IREFO(J)=3, AND IDCOO(J)=1, FOR SOME J

CARD TYPE	FORMAT	VARIABLE	DESCRIPTION/COMMENTS
	37-48	RPLH	PLASMA HEIGHT FOR REFERENCE PF SYSTEM (m)
	49-60	EFDS	EF DIVERTOR-LIKE COIL EXPONENT IN SCALING EQUATION IF IDCOO(J)=1 FOR SOME J
109	I		IF IREFO(J)≠3 OR 4 SKIP TO CARD 112
	1-6	NC	NUMBER OF EF COILS ON OR ABOVE MIDPLANE(-)
	7-12	N1	NUMBER OF EF INSIDE COILS IN REFERENCE CASE(-)
	13-18	N2	NUMBER OF EF DIVERTOR-LIKE COILS IN REFERENCE(-)
	19-24	N3	NUMBER OF EF OUTSIDE COILS IN REFERENCE(-)
	25-30	NS1	LOCATION IN LINEAR ARRAY WHERE FIRST EFI COIL IS DEFINED BELOW. TYPICALLY 1
	31-36	NS2	LOCATION IN LINEAR ARRAY WHERE FIRST EFD COIL IS DEFINED BELOW. TYPICALLY > NS1
	37-42	NS3	LOCATION IN LINEAR ARRAY WHEN FIRST EFO COIL IS DEFINED BELOW. TYPICALLY > NS2
110	E		REPEAT CARD TYPE 110 I=1 TO NC NUMBER OF TIMES
	1-12	RR(I)	RADIAL DISPLACEMENT OF EF COIL IN REFERENCE SYSTEM(m) (SEE FIGURE 2-28)
	13-24	ZR(I)	VERTICAL DISPLACEMENT OF EF COIL IN REFERENCE SYSTEM(m)
	25-36	ALR(I)	EF COIL CURRENT TO PLASMA CURRENT RATIO IN REFERENCE SYSTEM(-)
111	I	(NTR(I), I=1,NC)	NUMBER OF TURNS PER EF COIL(-)

TABLE 5-5

COAST INPUT DECK -- NEUTRAL BEAM SYSTEM

Only two input formats are used. An I is entered in the format column of the table for (12I6); while an E indicates (6E12.4).

CARD TYPE	FORMAT	VARIABLE	DESCRIPTION/COMMENTS
112	E		
	1-12	SNB	LENGTH OF NEUTRAL BEAM ARM(m) (SEE FIG. 2-11)
	13-24	TH	NEUTRAL BEAM INJECTION ANGLE WITH RESPECT TO THE PLASMA MAJOR RADIUS VECTOR AT THE PLASMA CENTER(m) (SEE FIGS. 2-15 AND 2-16)
	25-36	RNNBE	NUMBER OF NEUTRAL BEAM ARMS IF RNNBE IS NEGATIVE, THE REQUIRED NUMBER OF ARMS IS CALCULATED
113	E		
	1-12	FSRNB	NEUTRAL BEAM POWER SUPPLY FLYWHEEL SPEED RANGE(-) USE 0.707
	13-24	PFNB	NEUTRAL BEAM GENERATOR POWER FACTOR(-) USE 0.9
	25-36	OTNB	NEUTRAL BEAM GENERATOR OVERTORQUE(-) USE 2.5
114	E		
	1-12	IIS	TOTAL CURRENT PER ION SOURCE AND ACCELERATOR ASSEMBLY INCLUDING MOLECULAR COMPONENTS(A)
	13-24	NIS	NUMBER OF SOURCES PER NEUTRAL BEAM ARM(-)
	25-36	DSW1	WIDTH OF SOURCE EMITTING AREA(m) SEE FIGURE 2-12
	37-48	DSW2	HEIGHT OF SOURCE EMITTING AREA(m)
	49-60	DS	SOURCE ARRAY HORIZONTAL WIDTH(m)
	61-72	DS2	SOURCE ARRAY VERTICAL HEIGHT(m)
115	E		
	1-12	FDP	FRACTION OF D^+ IONS(-) (THE REMAINDER ARE ASSUMED TO BE D_2^+)
	13-24	TG	SOURCE GAS TEMPERATURE(K)
	25-36	GE	GAS TO ION CONVERSION EFFICIENCY(-) GE $\sim$ 0.4

CARD TYPE	FORMAT	VARIABLE	DESCRIPTION/COMMENTS
	37-48	CNBE	NEUTRAL BEAM ENERGY CONSTANT($KeV \cdot m^{+2}$) USE 1.E-18
	49-60	DN	NUMBER OF MOLECULES DESORBED PER ION IMPINGING ANY SURFACE INSIDE THE ARM(-)
	61-72	GAM2	DIRECT ENERGY CONVERSION SECONDARY ELECTRON PRODUCTION PARAMETER(-) GAM2 $\gtrsim$ 1.0
116	E		
	1-12	T1	TRANSMISSION COEFFICIENT THROUGH ION DEFLECTION PLATES(-) (SEE FIGURE 2-17)
	13-24	T2	TRANSMISSION COEFFICIENT THROUGH ELECTRON SUPPRESSORS(-)
	25-36	T3	TRANSMISSION COEFFICIENT THROUGH NEUTRALIZER DUCTS(-)
	37-48	TS	TRANSMISSION COEFFICIENT OF IONS THROUGH ELECTRON SUPPRESSOR GRIDS (-)
	49-60	PCE	POWER CONVERSION EFFICIENCY IN RECOVERY SYSTEM POWER CONVERSION EQUIPMENT(-)
	61-72	P1	CONVERSION EFFICIENCY IN NEUTRAL BEAM POWER SUPPLY(-)
117	E		
	1-12	LNE	LENGTH OF NEUTRAL BEAM DUCT(m)
	13-24	DSOW	DUCT SCRAPE-OFF WIDTH(m)
	25-36	PNEL	PRESSURE LIMIT IN NEUTRALIZER DUCT(TORR)
	37-48	ASNC	VACUUM PUMP AREA IN SOURCE-NEUTRALIZER-COLLECTOR REGION(M^3)
	49-60	ACD	VACUUM PUMP AREA IN THE DRIFT TUBE REGION(m^2)
	61-72	SSP	SPECIFIC PUMPING SPEED($\ell \cdot s^{-1} \cdot m^{-2}$)
118	E		
	1-12	VNB	VOLUME OF NEUTRAL BEAM VACUUM VESSEL(m^3)
	13-24	DSNC	DRIFT LENGTH IN SOURCE-NEUTRALIZER-COLLECTOR REGION(m)

CARD TYPE	FORMAT	VARIABLE	DESCRIPTION/COMMENTS
	25-36	DCD	DRIFT LENGTH IN CALORIMETER-DUCT (FROM NB ARM TO TOROIDAL VACUUM VESSEL) REGION(m)
	37-48	DNB	SEPARATION BETWEEN NEUTRAL BEAM ARM AND TF COIL DEWAR(m)
	49-60	DSH	NEUTRAL BEAM DUCT SHIELD THICKNESS(m)
	61-72	DSOWD	DUCT SCRAPE-OFF THICKNESS(m)
119	E 1-12	FNE	NEUTRALIZATION EFFICIENCY ASSUMED(-) (IF FNE=0.0, THE NEUTRALIZATION EFFICIENCY IS CALCULATED USING CODE MODELS)
	13-24	FA	INJECTION CROSSOVER PARAMETER(-). IF FA=0 THE BEAMS CROSS AT THE PLASMA CENTER. IF FA=1, THE BEAMS CROSS AT THE PLASMA OUTER EDGE
	25-36	FVS	FRACTION OF ACCELERATION VOLTAGE ON ELECTRON SUPPRESSOR(-) FVS=0.2 SUGGESTED
	37-48	FVC	FRACTION OF ACCELERATION VOLTAGE ON ION COLLECTOR PLATES, FVC < 1.0 AND 0.85 IS SUGGESTED
	49-60	CP	PUMP CAPACITY($\ell \cdot s^{-1} \cdot m^{-2}$)
	61-72	PEX	EXPLOSIVE PRESSURE LIMIT(TORR) USE 13.
			SEE FIGURES 2-11 THRU 2-17 FOR CLARIFICATION OF MANY OF THE NEUTRAL BEAM SYSTEM INPUT DATA

TABLE 5-6

COAST INPUT DECK -- TRITIUM SYSTEM

Only two input formats are used. An I is entered in the format column of the table for (12I6); while an E indicates (6E12.4)

CARD TYPE	FORMAT	VARIABLE	DESCRIPTION/COMMENTS
120	E		
	1-12	T2DIS	TRITIUM HELD UP IN CRYODISTILLATION COLUMNS(g)
	13-24	GASEF	GAS TO ION CONVERSION EFFICIENCY IN PRODUCING THE TOROIDAL PLASMA(-)
	25-36	PRES	AVERAGE NUMBER OF RESERVE PULSES OF T2 HELD UP ON SITE(-)
	37-48	TLOSS	TRITIUM LOSS FACTOR AS A RESULT OF ON-SITE PROCESSING DUE TO PERMEATION ETC.(-)
121	E		
	1-12	DDST	DAYS OF D2 INVENTORY ON-SITE(DAYS)
	13-24	DTST	DAYS OF T2 INVENTORY ON-SITE(DAYS)
	25-36	TMCRO	T2 MASS HELD IN CRYOSTILLS(kg)
	37-48	UTRAP	VOLUME TO MASS RATIO IN U-TRAPS($m^3 \cdot kg^{-1}$)
122	E		
	1-12	OUTGAS	H2 OUTGASSING OF VESSEL($TORR \cdot L \cdot cm^{-2}$)
	13-24	TEMPO	TEMPERATURE OF VESSEL WALLS(K)
	25-36	TEMP1	TEMPERATURE OF ON-SITE GAS(K)

TABLE 5-7

COAST INPUT DECK -- COOLING SYSTEM

Only two input formats are used. An I is entered in the format column of the table for (12I6); while an E indicates (6E12.4)

CARD TYPE	FORMAT	VARIABLE	DESCRIPTION/COMMENTS
123	E		
	1-12	TAUTF	COPPER TF COIL COOLING TIME CONSTANT(s)
	13-24	TAUPF	COPPER PF COIL COOLING TIME CONSTANT(s)
	25-36	FFTF	COOLANT VOLUME PER SECOND OVER COPPER TF COIL VOLUME(s^{-1})
	37-48	FFPF	COOLANT VOLUME PER SECOND OVER COPPER PF COIL VOLUME(s^{-1})
	49-60	QHL	HEAT LEAK PER UNIT SURFACE OF S/C TF COIL ($kW \cdot m^{-2}$)
	61-72	QJLJ	HEAT LOSS PER JOINT OF S/C TF COIL (kW)
124	E		
	1-12	RVV	VACUUM VESSEL COOLANT TEMPERATURE RISE(K)
	13-24	RSH	SHIELD COOLANT TEMPERATURE RISE(K)
	25-36	RNBS	NEUTRAL BEAM COOLANT TEMPERATURE RISE(K)
	37-48	RDV	BUNDLE DIVERTOR COOLANT TEMPERATURE RISE(K)
	49-60	RSHB	BLANKET REGION SHIELD COOLANT TEMPERATURE RISE(K)
	61-72	RBLK	BLANKET COOLANT TEMPERATURE RISE(K) (SEE FIGURE 2-31 FOR SCHEMATIC OF TYPICAL HEAT DISSIPATION SYSTEM)
125	E		
	1-12	TCOMP	HELIUM COMPRESSOR AFTERCOOLER TEMPERATURE(K)
	13-24	ETAM	HELIUM REFRIGERATION MECHANICAL EFFICIENCY (FRACTION OF CARNOT)
	25-36	TEMP	AVERAGE TEMPERATURE OF COPPER TF COILS(K)
	37-48	TEMPP	AVERAGE TEMPERATURE OF COPPER PF COILS(K)
	49-60	TEMPO	AVERAGE TEMPERATURE OF COPPER OH COILS(K)

CARD TYPE	FORMAT	VARIABLE	DESCRIPTION/COMMENTS
	61-72	CTC	COOLING TOWER CONSTANT (RATIO OF ELECTRICAL POWER TO OPERATE TOWER TO THE THERMAL POWER REMOVED BY TOWER)
126	E		
	1-12	WNCPQR	N2 COMPRESSOR POWER OVER REFRIGERATION LOAD(-)
	13-24	PMPEFF	HELIUM PUMP EFFICIENCY RATING(-)
	25-36	PPFAC	HELIUM PUMP POWER FACTOR(-)
	37-48	EFLNTF	COPPER TF LIQUID NITROGEN EFFICIENCY FACTOR(-) USE 0.9
	49-60	APMC	AVERAGE MISCELLANEOUS HEAT LOAD(MW)
127	E		
	1-12	PPOHH	IDEAL HELIUM PUMP POWER FOR S/C OH COILS ($kW \cdot CONDUCTOR^{-1} \cdot m^{-1}$)
	13-24	TOHC	TEMPERATURE OF SUPERCONDUCTING OH COIL(K)
	25-36	PNOH	OH COIL MAXIMUM TIME AVERAGED HEAT LOAD DUE TO NUCLEAR EFFECTS(kW) PNOH $\gtrsim$ 0.0
	37-48	EAOH	SUPERCONDUCTING OH AC LOSSES(KJ)
	49-60	RNTJ	NUMBER OF TURNS PER OH CONNECTIONS(-)
128	E		
	1-12	PPEFH	EF COIL IDEAL HELIUM PUMP POWER ($kW \cdot CONDUCTOR^{-1} \cdot m^{-1}$)
	13-24	TEFC	TEMPERATURE OF SUPERCONDUCTING EF COIL(K)
	25-36	PNEF	EF MAXIMUM TIME AVERAGED HEAT LOAD DUE TO NUCLEAR EFFECTS(kW)
	37-48	EAEF	SUPERCONDUCTING EF AC LOSSES(KJ)
	49-60	CIRPJ	LENGTH OF EF CONDUCTOR PER JOINT(m)
129	E		
	1-12	HDEL1	COEFFICIENT FOR HEAT DISSIPATION CONVERTED TO ELECTRICAL LOAD RATED ON PEAK POWER OVER COOLANT TEMPERATURE RISE(-)

CARD TYPE	FORMAT	VARIABLE	DESCRIPTION/COMMENTS
	13-24	HDEL2	COEFFICIENT FOR HEAT DISSIPATION CONVERTED TO ELECTRICAL LOAD RATED ON AVERAGE POWER OVER COOLANT TEMPERATURE RISE(-)

TABLE 5-8

COAST INPUT DECK -- DEVICE STRUCTURE

Only two input formats are used. An I is entered in the format column of the table for (12I6); while an E indicates (6E12.4)

CARD TYPE	FORMAT	VARIABLE	DESCRIPTION/COMMENTS
130	E		
	1-12	E	MODULUS OF ELASTICITY FOR BUCKING CYLINDER(MPa)
	13-24	SBCB	SAFETY FACTOR ON BUCKING FOR BUCKING CYLINDER
	25-36	SBCC	SAFETY FACTOR ON COMPRESSION FOR BUCKING CYLINDER
	37-48	BCBM	MAXIMUM B-FIELD BUCKED(T)
	49-60	EC	COMPRESSIVE YIELD STRESS(MPa) FOR BUCKING CYLINDER SIZING
131	E		
	1-12	DAGI	ACCUMULATED ACCESS GAP ALLOWANCES BETWEEN DEVICE SHIELD REGION AND INNER TFC LEG DEWAR(m)
	13-24	DAGO	ACCUMULATED ACCESS GAP ALLOWANCES BETWEEN THE DEVICE SHIELD REGION AND TFC OUTER LEG DEWAR(m)
	25-36	DAGC	ACCUMULATED ACCESS GAP ALLOWANCES BETWEEN COPPER HYBRID TFC (IF ITFS(I)=4). LOCATED BETWEEN EF AND COPPER TF FOR BOTH INNER AND OUTER LEGS(m)
	37-48	DAGV	ACCUMULATED ACCESS GAP ALLOWANCE BETWEEN THE DEVICE SHIELD REGION AND THE POINT OF TFC MAXIMUM HEIGHT(m)
	49-60	PER	RATIO OF SUPPORT STRUCTURE (STRUCTURAL STEEL, ETC.) TO DEVICE COMPONENT MASS(-)

TABLE 5-9

COAST INPUT DECK -- REACTOR CELL AND FACILITIES

Only two input formats are used. An I is entered in the format column of the table for (12I6); while an E indicates (6E12.4)

CARD TYPE	FORMAT	VARIABLE	DESCRIPTION/COMMENTS
132	E		
	1-12	SWAL	CLEAR SPACE FROM DEVICE COMPONENTS (e.g., NEUTRAL BEAM ARM) TO CELL WALL(m) SEE FIGURE 2-35
	13-24	FA	MULTIPLICATIVE CLEARANCE FACTOR TIMES LENGTH OF NEUTRAL BEAM ARM FOR MANEUVERING(-)
	25-36	HSUB	FREE VERTICAL CLEARANCE FROM FLOOR TO SPRING-LINE MINUS MAXIMUM HEIGHT OF TFC(m)
	37-48	HBAS	REACTOR CELL BASEMENT HEIGHT(m)
133	E		
	1-12	COPEAV	COEFFICIENT OF PERFORMANCE FOR EXPERIMENTAL AREA VENTILATION(-) FOR TNS, DTHR, USE 2.0
	13-24	EAVC1	EXPERIMENTAL AREA VENTILATION SIZING COEFFICIENT (-) FOR TNS, DTHR, USE 1.645E-4
	25-36	EAVC2	EXPERIMENTAL AREA VENTILATION SIZING COEFFICIENT FOR TNS, DTHR, USE 5.071E-5
134	E		
	1-12	SITE	ESTIMATED SITE AREA(m^2)
	13-24	RAIL	LENGTH OF RAIL FOR ACCESS(m)
	25-36	UTILP	BASIC UTILITY SERVICE(kWE)
135	E		
	1-12	YRST	REFERENCE YEAR FOR COST COEFFICIENT ENTRIES (YEAR) FOR EXAMPLE, ENTER 1978.75 FOR SEPTEMBER 1, 1978
	13-24	YRSP	YEAR AT WHICH COSTS ARE EVALUATED(YEAR)
	25-36	ESCY	% ESCALATION PER YEAR

TABLE 5-10

COAST INPUT DECK -- UNIT COST COEFFICIENTS FOR REFERENCE YEAR, YRST TOKAMAK SYSTEM

Only two input formats are used. An I is entered in the format column of the table for (12I6); while an E indicates (6E12.4)

CARD TYPE	FORMAT	VARIABLE	DESCRIPTION/COMMENTS
136	E		
	1-12	UCVVA	UNIT COST PER KG FOR VACUUM VESSEL ($\$\cdot kg^{-1}$)
137	1-12	UCLL	UNIT COST PER AREA OF LINER LIMITER ($\$\cdot m^{-2}$)
138	1-12	UCDIV1	CONSTANT IN COST OF POLOIDAL DIVERTOR($)
	13-24	UCDIV2	POLOIDAL DIVERTOR COST PER VOLUME OF DIVERTOR ($\$\cdot m^{-3}$)
	25-36	UCDIV3	POLOIDAL DIVERTOR COST PER SURFACE AREA OF DIVERTOR($\$\cdot m^{-2}$)
139	E		
	1-12	UCBDP1	BUNDLE DIVERTOR COST PER COMPOUND PUMP AREA ($\$\cdot m^{-2}$)
	13-24	UCBDP2	BUNDLE DIVERTOR COST PER TARGET PUMP AREA ($\$\cdot m^{-2}$)
	25-36	UCBDP3	BUNDLE DIVERTOR UNIT COST FOR BACKING REGENERATION PUMP ($\$\ (\ell \cdot s^{-1})^{-1}$)
	37-48	UCBDP4	BUNDLE DIVERTOR COST FOR VACUUM CHAMBER PER MASS($\$\cdot kg^{-1}$)
	49-60	UCBDP5	BUNDLE DIVERTOR COST FOR CRYOGENIC SYSTEM PER AREA OF CRYOPUMP ($\$\cdot m^{-2}$)
140	E		
	1-12	UCBDC1	BUNDLE DIVERTOR COIL COST FOR CONDUCTOR PER MASS($\$\cdot kg^{-1}$)
	13-24	UCBDC2	BUNDLE DIVERTOR COIL COST FOR STRUCTURE PER MASS($\$\cdot kg^{-1}$)
	25-36	UCBDC3	BUNDLE DIVERTOR COIL COST FOR DEWAR PER MASS ($\$\cdot kg^{-1}$)

CARD TYPE	FORMAT	VARIABLE	DESCRIPTION/COMMENTS
141	E 1-12	UCMS	UNIT COST OF MACHINE STRUCTURE PER MASS($\$\cdot kg^{-1}$)
142	E 1-12	UCBC1	BUCKING CYLINDER COST PER MASS($\$\cdot kg^{-1}$)
		UCBC2	BUCKING CYLINDER COST PER TF COIL PER LENGTH OF TF COIL HEIGHT ($\$\cdot m^{-2}$). THIS COST ACCOUNTS FOR WELDING

I IS INDEX ON DEVICE COIL TYPE

143	E	(UCTFA1(I), I=1,5)	UNIT COST ON CONDUCTOR MASS OF TFC($\$\cdot kg^{-1}$)
144	E	(UCTFA2(I), I=1,5)	UNIT COST ON STRUCTURE MASS OF TFC($\$\cdot kg^{-1}$)
145	E	(UCTFA3(I), I=1,5)	UNIT COST ON DEWAR MASS($\$\cdot kg^{-1}$)
146	E 1-12	UCFABC	UNIT COST FOR FABRICATION OF CONDUCTOR COPPER TFC PER MASS($\$\cdot kg^{-1}$)
	13-24	UCFABS	UNIT COST FOR FABRICATION OF STRUCTURE OF COPPER TFC PER MASS($\$\cdot kg^{-1}$)
	25-36	UCFABD	UNIT COST FOR FABRICATION OF DEWAR FOR S/C TFC PER LENGTH OF TFC($\$\cdot m^{-1}$)
147	E 1-12	UCEFA	UNIT COST FOR EF COIL FOR CONDUCTOR PER MASS ($\$\cdot kg^{-1}$)
	13-24	UCEFA1	UNIT COST FOR FABRICATION OF EF CONDUCTOR, IF S/C, PER MASS($\$\cdot kg^{-1}$)
	25-36	UCEFA2	UNIT COST FOR FABRICATION OF EF STRUCTURE AND DEWAR PER MASS, IF S/C($\$\cdot kg^{-1}$) ALSO USED AS UNIT COST FOR EF STRUCTURE PER MASS, IF NOT S/C($\$\cdot kg^{-1}$)
148	E 1-12	UCOHA	UNIT COST FOR OH COIL CONDUCTOR PER MASS($\$\cdot kg^{-1}$)
	13-24	UCOHA1	UNIT COST FOR FABRICATION OF CONDUCTOR PER MASS IF S/C($\$\cdot kg^{-1}$)

CARD TYPE	FORMAT	VARIABLE	DESCRIPTION/COMMENTS
	25-36	UCOHA2	UNIT COST FOR FABRICATION OF OH STRUCTURE AND DEWAR, PER MASS, IF S/C($\$\cdot kg^{-1}$) ALSO USED AS UNIT COST FOR OH STRUCTURE PER MASS, IF NOT S/C($\$\cdot kg^{-1}$)
149	E		
	1-12	UCWS1	IF S/C TFC, UNIT COST FOR A WINDING STATION ASSUMING ONE STATION NEEDED FOR EACH SET OF 4 TF COILS ($\$\cdot STATION^{-1}$)
	13-24	UCWS2	IF S/C TFC, UNIT PRICE OF COIL WINDING PER TF COIL ($\$\cdot \#TFC^{-1}$)
150	E		
	1-12	UCDS1	UNIT COST PER DEVICE AND NEUTRAL BEAM SHIELD PER VOLUME ($\$\cdot m^{-3}$)
	13-24	UCDS2	UNIT COST FOR LEAD SHIELD PER MASS ($\$\cdot kg^{-1}$)

IF ITFS(5)≠1, SKIP TO CARD TYPE 156

TABLE 5-11

COAST INPUT DECK -- UNIT COST COEFFICIENTS FOR REFERENCE YEAR, YRST
DTHR OUTER BLANKET/SHIELD REGIONS

Only two input formats are used. An I is entered in the format column of the table for (12I6); while an E indicates (6E12.4)

CARD TYPE	FORMAT	VARIABLE	DESCRIPTION/COMMENTS
THERE ARE A TOTAL OF SIX CARDS FOR CARD TYPE 151			
151	E	((UCOBS(L,M), M=1,6)L=1,6)	UNIT COST OF ASSIGNED MATERIAL IN BLANKET/ SHIELD REGION BY MATERIAL AND ZONE ($\$\cdot m^{-3}$) REFER TO CARD TYPE 69-74 AND MAINTAIN CONSISTENCY OF MATERIAL UNIT COST w/ASSIGNMENT
152	E		
	1-12	UCBTFA	FIXED ESTIMATE FOR BLANKET TOOLING, FABRICATION AND ASSEMBLY IF NOT INCLUDED IN MATERIAL COST ($)
153	E		
	1-12	UCHX1	UNIT COST OF PRIMARY HEAT EXCHANGERS RELATED TO THE THERMAL LOAD ($\$\cdot MW^{-1}$)
	13-24	UCHX2	UNIT COST OF RECUPERATORS, PREHEATERS, ETC. RELATED TO HEAT EXCHANGED THEREIN ($\$\cdot kW^{-1}$)
154	E		
	1-12	UCSG1	THE COST OF STEAM GENERATORS HAS BEEN RELATED TO THE THERMODYNAMIC CYCLE PEAK WORKING FLUID TEMPERATURE (T_c,IN K), AND THE ELECTRIC POWER PRODUCED (P_e,IN MW) UCSG1 IS THE CONSTANT TERM IN A LINEAR FUNCTION OF COST FOR A STEAM GENERATOR IN A REFERENCE MW PLANT ($\$\cdot$(RSSG MW UNIT)$^{-1}$) SEE CARD 211 (SEE FIGURE 2-38)
	13-24	UCSG2	COEFFICIENT OF VARIABLE (T_c,IN K) IN LINEAR FUNCTION OF COST FOR A STEAM GENERATOR IN A REFERENCE MW PLANT ($\$\cdot(K)^{-1}\cdot$(RSSG MW UNIT)$^{-1}$)
	25-36	UCSTG	COST COEFFICIENT OF VARIABLE (T_c,IN K) IN LINEAR FUNCTION OF COST FOR A STEAM TURBINE GENERATOR IN A REFERENCE MW PLANT ($\$\cdot(K)^{-1}\cdot$ (RSSG MW UNIT)$^{-1}$) NOTE: EITHER UCSTG OR UCGTG SHOULD BE ZERO SINCE A PLANT DESIGN WOULD INCLUDE ONE OR THE OTHER SEE CARD 211
	37-48	UCGTG	UNIT COST COEFFICIENT OF GAS TURBINE GENERATOR WHICH IS DIRECTLY PROPORTIONAL TO ELECTRIC POWER PRODUCED BY PLANT ($\$\cdot MW^{-1}$)

CARD TYPE	FORMAT	VARIABLE	DESCRIPTION/COMMENTS
	49-60	UCAE	UNIT COST COEFFICIENT OF ACCESSORY ELECTRICAL EQUIPMENT RELATED TO BLANKET THERMAL POWER ($\$\cdot MW^{-1}$)
	61-72	UCE1	COST OF PRIMARY COOLANT EXTERNAL TO THE BLANKET ($)
155	E 1-12	UCE2	COST OF SECONDARY COOLANT EXTERNAL TO THE BLANKET ($)
	13-24	UCCP	COST OF COOLANT PROCESSING PLANT ($)
	25-36	UCTS	COST OF ENERGY STORAGE SYSTEM ($)
			(SEE FIGURE 2-20 FOR SCHEMATIC OF THERMAL-TO-ELECTRICAL CONVERSION SYSTEM)

TABLE 5-12

COAST INPUT DECK -- UNIT COST COEFFICIENTS FOR REFERENCE YEAR, YRST
ELECTRIC POWER AND CONTROL SYSTEM

Only two input formats are used. An I is entered in the format column of the table for (12I6); while an E indicates (6E12.4)

CARD TYPE	FORMAT	VARIABLE	DESCRIPTION/COMMENTS
156	E		
	1-12	UCMOT	UNIT COST OF MOTOR IN MFG SET FOR TF, PF, OR NB BASED ON A REFERENCE MW UNIT AND MODIFIED WITH AN ECONOMY-OF-SCALE EXPONENT INPUT BELOW, $(MW/MW_{ref})^{EC1}$ ($\$\cdot(RSTFM\ MW\ UNIT)^{-1}$) SEE CARD 199, 206, 208 (SEE FIGURE 2-38)
	13-24	UCGEN	UNIT COST OF GENERATOR IN MFG SET FOR TF, PF, OR NB BASED ON A REFERENCE MW UNIT AND MODIFIED WITH AN ECONOMY-OF-SCALE EXPONENT $(MW/MW_{ref})^{EC2}$ ($\$\cdot(RSTFG\ MW\ UNIT)^{-1}$) SEE CARD 199, 206, 208
	25-36	UCFLY	UNIT COST OF FLYWHEEL IN MFG SET FOR TF, PF, OR NB RATED ON ENERGY STORAGE REQUIREMENT ($\$\cdot MJ^{-1}$)
157	E		
	1-12	UCLSC1	UNIT COST FOR TERM IN COST MODEL FOR LOAD SMOOTHING CIRCUIT PER REF UNIT MODIFIED WITH AND ECONOMY-OF-SCALE EXPONENT, $(MW/MW_{ref})^{ECLSC1}$ ($\$\cdot(RSLSC\ MW\ SYSTEM)^{-1}$) SEE CARD 210
	13-24	UCLSC2	UNIT COST FOR TERM IN COST MODEL FOR LOAD SMOOTHING CIRCUIT PER UNIT POWER ($\$\cdot MW^{-1}$)
	25-36	UCLSC3	UNIT COST FOR TERM IN COST MODEL FOR LOAD SMOOTHING CIRCUIT PER REF UNIT MODIFIED BY SECOND ECONOMY-OF-SCALE EXPONENT, $(MW/MW_{ref})^{ECLSC2}$ ($\$\cdot(RSLSC\ MW\ SYSTEM)^{-1}$)
158	E		
	1-12	UCPSD	UNIT COST FOR PRIMARY AND SECONDARY DISTRIBUTION SYSTEMS RATED ON PEAK THERMAL POWER, ALL SYSTEMS ($\$\cdot MW^{-1}$)
159	E		
	1-12	UCTFPS	UNIT COST FOR S/C TF POWER CONVERSION EQUIPMENT BASED ON TF POWER REQUIREMENTS MODIFIED WITH AN ECONOMY-OF-SCALE EXPONENT, MW^{ECTF1} ($\$\cdot(MW)^{-1}$) SEE CARD 207

CARD TYPE	FORMAT	VARIABLE	DESCRIPTION/COMMENTS
160	E		
	1-12	UCTFP	UNIT COST FOR FIRST* TERM IN COST OF Cu TF RECTIFIER BASED ON REF UNIT MODIFIED WITH AN ECONOMY-OF-SCALE EXPONENT, $(MVA/MVA_{ref})^{ECTF1}$ ($\$\cdot(RSTFR1\ MVA\ SYSTEM)^{-1}$) SEE CARD 207 *2ND AND 3RD TERMS BASED ON UNIT COSTS UCR1 AND UCR2 INPUT BELOW SEE CARD 165
161	E		
	1-12	UCRT	UNIT COST OF RECTIFIER TRANSFORMER FOR OH, EF BASED ON A REF UNIT MODIFIED WITH AN ECONOMY-OF-SCALE EXPONENT, $(MVA/MVA_{ref})^{ECRT}$ ($\$\cdot(RSRT\ MVA\ SYSTEM)^{-1}$) SEE CARD 198
162	E		
	1-12	UCBUS	UNIT COST OF BUSWORK BASED ON OH CURRENT ($\$\cdot(MA)^{-1}$)
163	E		
	1-12	UCOHDR	UNIT COST IN FIRST* TERM OF COST OF OH DUAL RECTIFIER BASED ON A REF UNIT MODIFIED WITH AN ECONOMY-OF-SCALE EXPONENT, $(MVA/MVA_{ref})^{ECDRV1}$ ($\$\cdot(RSDRV1\ MVA\ SYSTEM)^{-1}$) SEE CARD 200 *2ND AND 3RD TERMS BASED ON UNIT COSTS UCR1 AND UCR2 INPUT BELOW SEE CARD 165 (SEE FIGURE 2-38)
	13-24	UCOHIS	UNIT COST OF OH INITIATION SWITCH BASED ON A REF UNIT MODIFIED WITH AN ECONOMY-OF-SCALE (EOS) EXPONENT, $(MVA/MVA_{ref})^{ECIS}$ ($\$\cdot(RSOHIS\ MVA\ SYSTEM)^{-1}$) SEE CARD 201
164	E		
	1-12	UCEF3R	UNIT COST IN FIRST* TERM OF COST OF EF 3-PHASE RECTIFIER BASED ON A REF UNIT MODIFIED WITH AN EOS EXPONENT $(VA/MVA_{ref})^{EC3VR1}$ ($\$\cdot(RS3RV1\ MVA\ SYSTEM)^{-1}$) SEE CARD 202 *2ND AND 3RD TERMS BASED ON UNIT COSTS UCR1 AND UCR2 INPUT BELOW SEE CARD 165 (SEE FIGURE 2-38)
	13-24	UCEFS	UNIT COST OF EF SWITCHING BASED ON A REF UNIT MODIFIED WITH AN EOS EXPONENT, $(MVA/MVA_{ref})^{ECEFS}$ ($\$\cdot(RSEFS\ MVA\ SYSTEM)^{-1}$) SEE CARD 203

CARD TYPE	FORMAT	VARIABLE	DESCRIPTION/COMMENTS
	25-36	UCEFC	UNIT COST OF PFC CAPACITOR BANK BASED ON ENERGY REQUIRED ($ (MJ)$^{-1}$)
	37-48	UCEFD	UNIT COST OF PFC DIODE ELEMENT BASED ON A REFERENCE UNIT MODIFIED WITH AN EOS EXPONENT $(MVA/MVA_{ref})^{ECEFD}$ ($·(RSEFD MVA SYSTEM)$^{-1}$) SEE CARD 204
	49-60	UCEFCS	UNIT COST OF PFC CHARGING SUPPLY BASED ON A REFERENCE UNIT MODIFIED WITH AN EOS EXPONENT $(MVA/MVA_{ref})^{ECPCT}$ ($·(RSPCT MVA SYSTEM)$^{-1}$) SEE CARD 205
165	E 1-12	UCR1	UNIT COST IN SECOND TERM OF COST FOR RECTIFIERS BASED ON A REFERENCE UNIT MODIFIED WITH AN EOS EXPONENT $(MVA/MVA_{ref})^{EC3RV2}$ ($·(RS3RV2 MVA SYSTEM)$^{-1}$) SEE CARD 202 (SEE FIGURE 2-38)
	13-24	UCR2	UNIT COST OF THIRD TERM OF COST FOR RECTIFIERS BASED ON AVERAGE KILOAMP INCREMENT ABOVE 5 kA ($·(kA)$^{-1}$)
166	E 1-12	UCPCS	UNIT COST OF DEVICE CONTROL, HANDLING AND SAFETY ($)
167	E	UCPD	UNIT COST FOR PLASMA DIAGNOSTIC EQUIPMENT ($)
168	E	UCSES	UNIT COST FOR STAND-BY OR EMERGENCY SYSTEM ($)
169	E 1-12	UCSS1	UNIT COST FOR FIRST TERM IN COST EQUATION FOR SUBSTATION BASED ON REFERENCE UNIT MODIFIED BY EOS EXPONENT $(MW/MW_{ref})^{ECSUB1}$ ($·(RSSUB MW SYSTEM)$^{-1}$) SEE CARD 212
	13-24	UCSS2	UNIT COST FOR SECOND TERM IN COST EQUATION FOR SUBSTATION BASED ON REFERENCE UNIT MODIFIED BY EOS EXPONENT $(MW/MW_{ref})^{ECSUB2}$ ($·(RSSUB MW SYSTEM)$^{-1}$)

TABLE 5-13

COAST INPUT DECK -- UNIT COST COEFFICIENTS FOR REFERENCE YEAR, YRST TOKAMAK SUPPORT SYSTEMS

Only two input formats are used. An I is entered in the format column of the table for (12I6); while an E indicates (6E12.4)

CARD TYPE	FORMAT	VARIABLE	DESCRIPTION/COMMENTS
170	E		
	1-12	UCRSS	UNIT COST FOR REMOTE SERVICING SYSTEM ($)
171	E		
	1-12	UCFH1	UNIT COST CONSTANT FOR COSTING THE FUEL HANDLING SYSTEM IN BATCH MODE ($) SEE REFERENCE 1, p 4-7
	13-24	UCFH2	UNIT COST PER AREA FOR COSTING THE FUEL HANDLING SYSTEM IN BATCH MODE ($\cdot m^{-2}$) SEE REFERENCE 1, p 4-7
	25-36	UCFH3	UNIT COST PER LENGTH FOR COSTING THE FUEL HANDLING SYSTEM IN BATCH MODE ($\cdot m^{-1}$) SEE REFERENCE 1, p 4-7
	37-48	UCFH4	LIMIT COST SCALED BY DIMENSIONLESS NUMBER WRT PLASMA VOLUME FOR COSTING THE FUEL HANDLING SYSTEM IN THE BATCH MODE ($) SEE REFERENCE 1, p 4-7

IF IFUELO.EQ.0, SKIP TO CARD 177. CARD TYPES 172 THROUGH 176 ARE INPUT FOR SYSTEMS DEFINED IN THE CONTINUOUS FUEL HANDLING MODE.

172	E		
	1-12	UCTSS(1)	UNIT COST CONSTANT FOR COSTING THE TRITIUM STORAGE SYSTEM IN THE CONTINUOUS FUEL HANDLING MODE ($) (SEE FIGURE 2-39)
	13-24	UCTSS(2)	UNIT COST PER MASS OF T ON-SITE IN STAND-BY INVENTORY FOR TRITIUM STORAGE SYSTEM ($\cdot(g\cdot atom)^{-1}$)
	25-36	UCTSS(3)	UNIT COST PER MASS OF T ON-SITE IN STAND-BY INVENTORY TO THE 2/3 FOR TRITIUM STORAGE SYSTEM ($\cdot(g\cdot atom)^{-2/3}$)
	37-48	UCTSS(4)	UNIT COST PER MASS OF T ON-SITE IN STAND-BY INVENTORY TO THE 1/3 FOR TRITIUM STORAGE SYSTEM ($\cdot(g\cdot atom)^{-1/3}$)

CARD TYPE	FORMAT	VARIABLE	DESCRIPTION/COMMENTS
	49-60	UCTSS(5)	UNIT COST PER MASS OF T USED IN ONE DAY'S OPERATION FOR TRITIUM STORAGE SYSTEM ($\$\cdot(g\cdot atom\cdot day^{-1})^{-1}$)
	61-72	UCTSS(6)	UNIT COST PER MASS OF T USED IN ONE DAY'S OPERATION TO THE 1/3 FOR TRITIUM STORAGE SYSTEM ($\$\cdot(g\cdot atom\cdot day^{-1})^{-1/3}$)
173	E		
	1-12	UCDSS(1)	UNIT COST CONSTANT FOR COSTING THE DEUTERIUM STORAGE SYSTEM ($)
	13-24	UCDSS(2)	UNIT COST PER MASS OF D ON-SITE IN STAND-BY INVENTORY TO THE 2/3 FOR DEUTERIUM STORAGE SYSTEM ($\$\cdot(g\cdot atom)^{-2/3}$)
	25-36	UCDSS(3)	UNIT COST PER MASS OF D USED IN ONE DAY'S OPERATION TO THE 2/3 FOR DEUTERIUM STORAGE SYSTEM ($\$\cdot(g\cdot atom\cdot day^{-1})^{-2/3}$)
174	E		
	1-12	UCFFIS(1)	UNIT COST CONSTANT FOR COSTING THE FUEL FABRICATION-INJECTION SYSTEM ($)
	13-24	UCFFIS(2)	UNIT COST PER MASS OF T INJECTED PER PULSE FOR FUEL FABRICATION-INJECTION SYSTEM ($\$\cdot(g\cdot atom\cdot pulse^{-1})^{-1}$)
	25-36	UCFFIS(3)	UNIT COST PER AVERAGE MASS OF T INJECTED PER SECOND DURING PULSING FOR FUEL FABRICATION-INJECTION SYSTEM ($\$\cdot(g\cdot atom\cdot s^{-1})^{-1}$)
175(1)	E		
	1-12	UCEPPS(1)	UNIT COST CONSTANT FOR COSTING THE EXHAUST PLASMA PROCESSING SYSTEM ($)
	13-24	UCEPPS(2)	UNIT COST PER MASS OF H-D-T FROM PLASMA EXHAUST PER DAY FOR EXHAUST PLASMA PROCESSING SYSTEM ($\$\cdot(g\cdot atom\ H\text{-}D\text{-}T\cdot day^{-1})^{-1}$)
	25-36	UCEPPS(3)	UNIT COST PER MASS OF H-D-T FROM PLASMA EXHAUST PER DAY TO THE 2/3 FOR THE EXHAUST PLASMA PROCESSING SYSTEM ($\$\cdot(g\cdot atom\ H\text{-}D\text{-}T\cdot day^{-1})^{-2/3}$)

CARD TYPE	FORMAT	VARIABLE	DESCRIPTION/COMMENTS
	37-48	UCEPPS(4)	UNIT COST PER MASS OF H-D-T FROM PLASMA EXHAUST PER DAY TO THE 1/3 FOR THE EXHAUST PLASMA PROCESSING SYSTEM ($\$\cdot(\text{g}\cdot\text{atom H-D-T}\cdot\text{day}^{-1})^{-1/3}$)
	49-60	UCEPPS(5)	UNIT COST PER MASS OF CONTAMINATED D FROM THE NEUTRAL BEAMS PER DAY FOR THE EXHAUST PLASMA PROCESSING SYSTEM ($\$\cdot(\text{g}\cdot\text{atom } D_{C,NB}\cdot\text{day}^{-1})^{-1}$)
	61-72	UCEPPS(6)	UNIT COST PER MASS OF CONTAMINATED D FROM THE NEUTRAL BEAMS PER DAY TO THE 2/3 FOR THE EXHAUST PLASMA PROCESSING SYSTEM ($\$\cdot(\text{g}\cdot\text{atom } D_{C,NB}\cdot\text{day}^{-1})^{-2/3}$)
175(2)	E		
	1-12	UCEPPS(7)	UNIT COST PER MASS OF CONTAMINATED D FROM THE NEUTRAL BEAMS PER DAY TO THE 1/3 FOR THE EXHAUST PLASMA PROCESSING SYSTEM ($\$\cdot(\text{g}\cdot\text{atom } D_{C,NB}\cdot\text{day}^{-1})^{-1/3}$)
176(1)	E		
	1-12	UCCDS(1)	UNIT COST CONSTANT FOR COSTING THE CRYOGENIC DISTILLATION SYSTEM ($)
	13-24	UCCDS(2)	UNIT COST PER MASS OF H-D-T FROM PLASMA EXHAUST PER DAY FOR THE CRYOGENIC DISTILLATION SYSTEM ($\$\cdot(\text{g}\cdot\text{atom H-D-T}\cdot\text{day}^{-1})^{-1}$)
	25-36	UCCDS(3)	UNIT COST PER MASS OF H-D-T FROM PLASMA EXHAUST PER DAY TO THE 2/3 FOR THE CRYOGENIC DISTILLATION SYSTEM ($\$\cdot(\text{g}\cdot\text{atom H-D-T}\cdot\text{day}^{-1})^{-2/3}$)
	37-48	UCCDS(4)	UNIT COST PER MASS OF CONTAMINATED D FROM THE NEUTRAL BEAMS PER DAY FOR THE CRYOGENIC DISTILLATION SYSTEM ($\$\cdot(\text{g}\cdot\text{atom } D_{C,NB}\cdot\text{day}^{-1})^{-1}$)
	49-60	UCCDS(5)	UNIT COST PER MASS OF CONTAMINATED D FROM THE NEUTRAL BEAMS PER DAY TO THE 2/3 FOR THE CRYOGENIC DISTILLATION SYSTEM ($\$\cdot(\text{g}\cdot\text{atom } D_{C,NB}\cdot\text{day}^{-1})^{-2/3}$)
	61-72	UCCDS(6)	UNIT COST PER MASS OF URANIUM IN CRYODISTILLATION TRAPS FOR THE CRYOGENIC DISTILLATION SYSTEM ($\$\cdot(\text{kg U})^{-1}$)

CARD TYPE	FORMAT	VARIABLE	DESCRIPTION/COMMENTS
176(2)	E		
	1-12	UCCDS(7)	UNIT COST PER MASS OF URANIUM IN CRYODISTILLATION TRAPS TO THE 2/3 FOR THE CRYOGENIC DISTILLATION SYSTEM ($\$\cdot(\text{kg U})^{-2/3}$)
	13-24	UCCDS(8)	UNIT COST PER MASS AT URANIUM IN CRYODISTILLATION TRAPS TO THE 1/3 FOR THE CRYOGENIC DISTILLATION SYSTEM ($\$\cdot(\text{kg U})^{-1/3}$)
177	E		
	1-12	UCTCS1	UNIT COST CONSTANT IN COSTING THE TRITIUM CLEAN-UP SYSTEM ($)
	13-24	UCTCS2	UNIT COST PER VOLUME OF THE VACUUM VESSEL TO AN ECONOMY OF SCALE EXPONENT, $(\text{VVV})^{\text{ECTC1}}$ ($\$\cdot(\text{m}^3)^{-1}$) SEE CARD 215
	25-36	UCTCS3	UNIT COST PER VOLUME OF REACTOR CELL PLUS BASEMENT TO AN ECONOMY OF SCALE EXPONENT, $(\text{VOLRC} + \text{VOLBS})^{\text{ECTC2}}$ ($\$\cdot(\text{m}^3)^{-1}$)
178	E		
	1-12	UCTVPS	UNIT COST PER LITER PER SECOND FOR TORUS VACUUM PUMPING SYSTEM ($\$\cdot(\ell\cdot s^{-1})^{-1}$)

I VARIES FROM 1 TO 5 WRT THE TF COILS

179	E	UCHR(I)	He REFRIGERATION REQUIREMENT FOR S/C TF COILS WHERE THE POWER IS RAISED TO AN ECONOMY OF SCALE EXPONENT, $(\text{kW})^{\text{ECHR}}$ ($\$\cdot(\text{kW})^{-1}$) SEE CARD 216
180	E		
	1-12	UCLN2	LIQUID NITROGEN REFRIGERATION REQUIREMENT FOR S/C WHERE THE POWER IS RAISED TO AN ECONOMY OF SCALE EXPONENT, $(\text{kW})^{\text{ECHR}}$ ($\$\cdot(\text{kW})^{-1}$)
	13-24	UCLNCU	LIQUID NITROGEN REFRIGERATION REQUIREMENT FOR Cu TF ($\$\cdot(\text{kW})^{-1}$) SEE CARD 216

CARD TYPE	FORMAT	VARIABLE	DESCRIPTION/COMMENTS
181	E		
	1-12	UCVVC1	UNIT COST FOR VACUUM VESSEL COOLING SYSTEM BASED ON THE PEAK POWER PER PULSE OVER THE COOLANT TEMPERATURE RISE TO AN EXPONENT (PEAK MW$\cdot$(K$_{ref}$)$^{-1}$)^{ECHD1} ($\$\cdot$(1 MW$\cdot$(RVV K)$^{-1}$ SYSTEM)$^{-1}$) SEE CARD 213 (SEE FIGURE 2-39)
	13-24	UCVVC2	UNIT COST FOR VACUUM VESSEL COOLING SYSTEM BASED ON THE AVERAGE POWER PER PULSE OVER THE COOLANT TEMPERATURE RISE TO AN EXPONENT THEN MODIFIED BY THE COOLANT TEMPERATURE RISE TO A SECOND EXPONENT, (K$_{ref}$)^{ECHD3} (AVERAGE MW/K$_{ref}$)^{ECHD2}. ($\$\cdot$(1 MW$\cdot$(RVV K)$^{-1}$ SYSTEM)$^{-1}$) SEE CARD 213
	25-36	UCVVC3	UNIT COST FOR VACUUM VESSEL COOLING SYSTEM BASED ON THE ENERGY DISSIPATED PER PULSE IN THE VV OVER THE COOLANT TEMPERATURE RISE TO AN EXPONENT, (MJ$_{dis}\cdot$K$_{ref}$)$^{-1}$)^{ECHD4} ($\$\cdot$(1 MJ$\cdot$(RVV K)$^{-1}$ SYSTEM)$^{-1}$) SEE CARD 213
182	E		
	1-12	UCDVC1	UNIT COST FOR DIVERTOR COOLING SYSTEM BASED ON THE PEAK POWER PER PULSE OVER THE COOLANT TEMPERATURE RISE TO AN EXPONENT, ($\$\cdot$(1 MW$\cdot$(RDV K)$^{-1}$ SYSTEM)$^{-1}$) SEE CARD 213 (SEE FIGURE 2-39)
	13-24	UCDVC2	UNIT COST FOR DIVERTOR COOLING SYSTEM BASED ON THE AVERAGE POWER PER PULSE OVER THE COOLANT TEMPERATURE RISE TO AN EXPONENT THEN MODIFIED BY THE COOLANT TEMPERATURE RISE TO A SECOND EXPONENT, (AVERAGE MW$\cdot$(K$_{ref}$)$^{-1}$)$^{ECHD2}\cdot$(K$_{ref}$)^{ECHO3} SEE CARD 213
	25-36	UCDVC3	UNIT COST FOR DIVERTOR COOLING SYSTEM BASED ON THE ENERGY DISSIPATED PER PULSE IN THE DIVERTOR OVER THE COOLANT TEMPERATURE RISE TO AN EXPONENT, (MJ$_{dis}\cdot$(K$_{ref}$)$^{-1}$)^{ECHD4} ($\$\cdot$(1 MJ$\cdot$(RDV K)$^{-1}$ SYSTEM)$^{-1}$) SEE CARD 213

CARD TYPE	FORMAT	VARIABLE	DESCRIPTION/COMMENTS
183	E		
	1-12	UCNBC1	UNIT COST FOR NEUTRAL BEAM COOLING SYSTEM BASED ON THE PEAK POWER PER PULSE OVER THE COOLANT TEMPERATURE RISE TO AN EXPONENT $(\text{PEAK MW}\cdot(K_{ref})^{-1})^{ECHD1}$ $(\$\cdot(1\ \text{MW}\cdot(\text{RNB K})^{-1}\ \text{SYSTEM})^{-1})$ SEE CARD 213 (SEE FIGURE 2-39)
	13-24	UCNBC2	UNIT COST FOR NEUTRAL BEAM COOLING SYSTEM BASED ON THE AVERAGE POWER PER PULSE OVER THE COOLANT TEMPERATURE RISE TO AN EXPONENT THEN MODIFIED BY THE COOLANT TEMPERATURE RISE TO A SECOND EXPONENT, $(\text{AVERAGE MW}\cdot(K_{ref})^{-1})^{ECHD2}\cdot(K_{ref})^{ECHD3}$ $(\$\cdot(1\ \text{MW}\cdot(\text{RNB K})^{-1}\ \text{SYSTEM})^{-1})$ SEE CARD 213
	25-36	UCNBC3	UNIT COST FOR NEUTRAL BEAM COOLING SYSTEM BASED ON THE ENERGY DISSIPATED PER PULSE IN THE NEUTRAL BEAM OVER THE COOLANT TEMPERATURE RISE TO AN EXPONENT, $(MJ_{dis}\cdot K_{ref})^{-1})^{ECHD4}$ $(\$\cdot(1\ \text{MJ}\cdot(\text{RNB K})^{-1}\ \text{SYSTEM})^{-1})$ SEE CARD 213
184	E		
	1-12	UCFCC1	UNIT COST FOR THE COPPER TF COIL COOLING SYSTEM BASED ON THE PEAK POWER PER PULSE OVER THE COOLANT TEMPERATURE RISE TO AN EXPONENT THEN MODIFIED BY THE COOLANT TEMPERATURE RISE TO A SECOND EXPONENT, $(\text{PEAK MW}\cdot(K_{ref})^{-1})^{ECHD7}\cdot(K_{ref})^{ECHD5}$ $(\$\cdot(1\ \text{MW}\cdot(\text{RTF K})^{-1}\ \text{SYSTEM})^{-1})$ SEE CARD 214
	13-24	UCFCC2	UNIT COST FOR THE COPPER PF COIL (EF/OH) COOLING SYSTEM BASED ON THE PEAK POWER PER PULSE OVER THE COOLANT TEMPERATURE RISE TO AN EXPONENT THEN MODIFIED BY THE COOLANT TEMPERATURE RISE TO A SECOND EXPONENT, $(K_{ref})^{ECHD5}$ $(\text{PEAK MW}\cdot(K_{ref})^{-1})^{ECHD8}$ $(\$\cdot(1\ \text{MW}\cdot(\text{REF K})^{-1}\ \text{SYSTEM})^{-1})$ FOR THE OH COILS, <u>REF</u> IS REPLACED BY <u>ROHC</u> AND HANDLED SIMILARLY SEE CARD 214
	25-36	UCFCC3	UNIT COST FOR TF, EF, OH COIL COOLING SYSTEM BASED ON THE AVERAGE POWER PER PULSE TO AN EXPONENT, $(\text{MW})^{ECHD6}$ $(\$\cdot(\text{MW}^{-1}))$ SEE CARD 214

CARD TYPE	FORMAT	VARIABLE	DESCRIPTION/COMMENTS
	37-48	UCFCC4	UNIT COST FOR TF, EF, OH COIL COOLING SYSTEM BASED ON ONE-TENTH OF THE ENERGY DISSIPATED PER PULSE TO AN EXPONENT, $(MJ*0.1)^{ECHD4}$ ($\$\cdot(MJ^{-1})$) SEE CARD 213
185	E 1-12	UCVSC1	UNIT COST FOR VESSEL SHIELD COOLING SYSTEM BASED ON THE PEAK POWER PER PULSE OVER THE COOLANT TEMPERATURE RISE TO AN EXPONENT $(PEAK\ MW\ (K_{ref})^{-1})^{ECHD1}$ ($\$\cdot(1\ MW\cdot(RSH\ K)^{-1}\ SYSTEM)^{-1}$) SEE CARD 213 (SEE FIGURE 2-39)
	13-24	UCVSC2	UNIT COST FOR THE VESSEL SHIELD COOLING SYSTEM BASED ON THE AVERAGE POWER PER PULSE OVER THE COOLANT TEMPERATURE RISE TO AN EXPONENT THEN MODIFIED BY THE COOLANT TEMPERATURE RISE TO A SECOND EXPONENT, $(AVERAGE\ MW\cdot(K_{ref})^{-1})^{ECHD2}\cdot(K_{ref})^{ECHD3}$ ($\$\cdot(1\ MW\cdot(RSH\ K)^{-1}\ SYSTEM)^{-1}$) SEE CARD 213
	25-36	UCVSC3	UNIT COST FOR VESSEL SHIELD COOLING SYSTEM BASED ON THE ENERGY DISSIPATED PER PULSE IN THE VESSEL SHIELD OVER THE COOLANT TEMPERATURE RISE TO AN EXPONENT, $(ENERGY\cdot(K_{ref})^{-1})^{ECHD4}$ ($\$\cdot(1\ MJ\cdot(RSH\ K)^{-1}\ SYSTEM)^{-1}$) SEE CARD 213
186	E 1-12	UCGPC	UNIT COST FOR GENERAL PLANT COOLING SYSTEM BASED ON THE TOTAL AVERAGE POWER OF ALL SYSTEMS FEEDING THE COOLING TOWER TO AN EOS EXPONENT, $(MW)^{ECGPC}$ ($\$\cdot(MW^{-1})$) SEE CARD 217
187	E 1-12	UCEAV	UNIT COST FOR EXPERIMENTAL AREA VENTILATION BASED ON THE SUM OF THE REACTOR CELL AND BASEMENT VOLUMES TO AN EOS EXPONENT, $(VOLRC-VOLBS)^{ECEAV}$ ($\$\cdot(M^{-3})$) SEE CARD 218

CARD TYPE	FORMAT	VARIABLE	DESCRIPTION/COMMENTS
188	E		
	1-12	UCRWH1	UNIT COST CONSTANT TERM FOR RADIOACTIVE WASTE HANDLING SYSTEM ($)
	13-24	UCRWH2	UNIT COST FOR RADIOACTIVE WASTE HANDLING SYSTEM BASED ON THE SQUARE ROOT OF THE PLASMA VOLUME ($\cdot(M)^{-3/2}$)
	25-36	UCRWH3	UNIT COST FOR RADIOACTIVE WASTE HANDLING SYSTEM BASED ON THE PLASMA VOLUME RAISED TO AN EOS EXPONENT, $(M^3)^{ECRW}$ ($\cdot(M^{-3})$) SEE CARD 219
	37-48	UCRWH4	UNIT COST FOR RADIOACTIVE WASTE HANDLING SYSTEM BASED ON THE PLASMA VOLUME ($\cdot(M^{-3})$)
	49-60	UCRWH5	UNIT COST FOR RADIOACTIVE WASTE HANDLING BASED ON THE SUM OF THE REACTOR CELL AND BASEMENT VOLUMES TO AN EOS EXPONENT, $(VOLRC + VOLBS)^{ECRW}$ ($\cdot(M^{-3})$) SEE CARD 219

TABLE 5-14

COAST INPUT DECK -- UNIT COST COEFFICIENTS FOR REFERENCE YEAR, YRST STRUCTURES AND SITE SERVICES

Only two input formats are used. An I is entered in the format column of the table for (12I6); while an E indicates (6E12.4)

CARD TYPE	FORMAT	VARIABLE	DESCRIPTION/COMMENTS
189	E		
	1-12	UCSRU1	UNIT COST PER METER SQUARE OF SITE ($\$\cdot(M^{-2})$)
	13-24	UCSRU2	UNIT COST PER METER OF RAIL ACCESS ($\$\cdot(M^{-1})$)
	25-36	UCSRU3	UNIT COST PER SERVICE ($\$\cdot(KW_E^{-1})$)
190	E		
	1-12	UCROB1	UNIT COST CONSTANT FOR REACTOR OPERATIONS BUILDING ($) SEE REFERENCE 7
	13-24	UCROB2	UNIT COST FOR REACTOR OPERATIONS BUILDING BASED ON VOLUME ENCLOSED INCLUDING CELL, FLOOR, AND BASEMENT ($\$\cdot(M^{-3})$)
	25-36	UCROB3	UNIT COST FOR REACTOR OPERATIONS BUILDING BASED ON TWICE THE FLOOR AREA ($\$\cdot(M^{-2})$)
	37-48	UCROB4	UNIT COST FOR REACTOR OPERATIONS BUILDING BASED ON THE VOLUME OF THE BASEMENT ($\$\cdot(M^{-3})$)
	49-60	UCROB5	UNIT COST CONSTANT ADDER FOR REACTOR OPERATIONS BUILDING IF DTHR REACTOR HOUSED ($)
191	E		
	1-12	UCRSUP	UNIT COST CONSTANT FOR REACTOR SUPPORT STRUCTURE ($)
	13-24	UCRSC	UNIT COST CONSTANT ADDER FOR REACTOR SUPPORT STRUCTURE IF DTHR REACTOR IS SIZED ($)
192	E		
	1-12	UCEPS	UNIT COST CONSTANT FOR ELECTRICAL PLANT STRUCTURES ($)
	13-24	UCEPS2	UNIT COST CONSTANT ADDER FOR ELECTRICAL PLANT STRUCTURES IF DTHR IS SIZED ($)

CARD TYPE	FORMAT	VARIABLE	DESCRIPTION/COMMENTS
193	E		
	1-12	UCOTH	UNIT COST CONSTANT TO COVER OTHER STRUCTURES ($)
	13-24	UCOTH2	UNIT COST CONSTANT ADDER TO COVER ADDITIONAL STRUCTURES IF DTHR IS SIZED ($)
194	E		
	1-12	UCMISC	UNIT COST CONSTANT TO COVER MISCELLANEOUS PLANT EQUIPMENT ($)
	13-24	UCMSC	UNIT COST CONSTANT ADDER TO COVER MISCELLANEOUS PLANT EQUIPMENT IF DTHR IS SIZED ($)
			(SEE FIGURES 2-36 AND 2-37 FOR COSTING CONSIDERATIONS ASSOCIATED WITH THE FACILITIES, BUILDINGS, AND STRUCTURES)

TABLE 5-15

COAST INPUT DECK -- UNIT COST COEFFICIENTS FOR REFERENCE YEAR, YRST NEUTRAL BEAM SYSTEMS

Only two input formats are used. An I is entered in the format column of the table for (12I6); while an E indicates (6E12.4)

CARD TYPE	FORMAT	VARIABLE	DESCRIPTION/COMMENTS
195	E		
	1-12	UCNBA	UNIT COST FOR THE NEUTRAL BEAM ARMS PER MAXIMUM NEUTRAL BEAM POWER REQUIREMENT ($\cdot$(MW^{-1}))
196	E		
	1-12	UCNBP(1)	UNIT COST CONSTANT FOR NEUTRAL BEAM POWER SUPPLY SYSTEM ($) (SEE SECTION 2.3)
	13-24	UCNBP(2)	UNIT COST FOR NEUTRAL BEAM POWER SUPPLY BASED ON THE CURRENT PER SOURCE DIVIDED BY THE CURRENT IN A REFERENCE SYSTEM THEN RAISED TO AN EOS EXPONENT, $(A/A_{ref})^{ECNB1}$ ($\cdot$(RSIPC A SYSTEM)$^{-1}$) SEE CARD 209
	25-36	UCNBP(3)	UNIT COST FOR NEUTRAL BEAM POWER SUPPLY BASED ON THE VOLT$\cdot$AMP REQUIRED DIVIDED BY THE VOLT$\cdot$AMP PROVIDED IN A REFERENCE SYSTEM THEN RAISED TO AN EOS EXPONENT, $(MVA/MVA_{ref})^{ECNB2}$ ($\cdot$(RSPPC MVA$_{SYSTEM}$)$^{-1}$) SEE CARD 209
	37-48	UCNBP(4)	UNIT COST FOR NEUTRAL BEAM POWER SUPPLY BASED ON THE COSTS RELATED TO A SINGLE SOURCE ($\cdot$(SOURCE)$^{-1}$)
197	E		
	1-12	UCNBPE	UNIT COST OF NEUTRAL BEAM ENERGY CONVERSION SYSTEM BASED ON POWER PRODUCED DIVIDED BY POWER PRODUCED IN A REFERENCE SYSTEM RAISED FOR AN EOS EXPONENT, $(MW/MW_{ref})^{ECNB3}$ ($\cdot$(RSNBC MW SYSTEM)$^{-1}$) SEE CARD 209

TABLE 5-16

COAST INPUT DECK -- UNIT COST COEFFICIENTS FOR REFERENCE YEAR, YRST REFERENCE UNITS AND ECONOMY-OF-SCALE (EOS) EXPONENT

Only two input formats are used. An I is entered in the format column of the table for (12I6); while an E indicates (6E12.4)

CARD TYPE	FORMAT	VARIABLE	DESCRIPTION/COMMENTS
198	E		
	1-12	RSRT	REFERENCE UNIT FOR SCALING PFC RECTIFIER-TRANSFORMER COST (MVA) SEE CARD 161
	13-24	ECRT	EOS EXPONENT IN COSTING PFC RECTIFIER TRANSFORMER (-)
199	E		
	1-12	RSMOPF	REFERENCE UNIT FOR SCALING PFC MOTOR SET AT COST (MW) SEE CARD 156
	13-24	RSGEPF	REFERENCE UNIT FOR SCALING PFC GENERATOR SET COST (MW) SEE CARD 156
200	E		
	1-12	RSDRV1	REFERENCE UNIT FOR SCALING OH DUAL-RECTIFIER COST RATED ON VOLT•AMPERE (MVA) SEE CARD 163
	13-24	ECDRV1	EOS EXPONENT IN COSTING OH DUAL-RECTIFIER RATED ON VA (-)
	25-36	RSDRV2	REFERENCE UNIT FOR SCALING OH DUAL-RECTIFIER COST RATED ON GAM*VOLT•AMPERE (MVA)
	37-48	ECDRV2	EOS EXPONENT IN COSTING OH DUAL-RECTIFIER RATED ON GAM*VA(-)
201	E		
	1-12	RSOHIS	REFERENCE UNIT FOR SCALING OH SWITCHING COST (MVA) SEE CARD 163
	13-24	ECIS	EOS EXPONENT IN COSTING OH SWITCHING (-)

CARD TYPE	FORMAT	VARIABLE	DESCRIPTION/COMMENTS
202	E		
	1-12	RS3RV1	REFERENCE UNIT FOR SCALING EF 3-PHASE RECTIFIER COST (MVA) SEE CARD 164
	13-24	EC3RV1	EOS EXPONENT IN COSTING 3-PHASE RECTIFIER (-)
	25-36	RS3RV2	REFERENCE UNIT FOR SCALING EF 3-PHASE RECTIFIER COST RATED ON GAM*VOLT AMPERE (MVA) SEE CARD 165
	37-48	EC3RV2	EOS EXPONENT IN COSTING EF 3-PHASE RECTIFIER COST RATED ON GAM*VA (-)
203	E		
	1-12	RSEFS	REFERENCE UNIT FOR SCALING EF SWITCHING COST (MVA) SEE CARD 164
	13-24	ECEFS	EOS EXPONENT IN COSTING EF SWITCHING(-)
204	E		
	1-12	RSEFD	REFERENCE UNIT FOR SCALING EF DIODE ELEMENT COST (MVA) SEE CARD 164
	13-24	ECEFD	EOS EXPONENT IN COSTING EF DIODE ELEMENT (-)
205	E		
	1-12	RSPCT	REFERENCE UNIT FOR SCALING EF CHARGING SUPPLY COST (MVA) SEE CARD 164
	13-24	ECPCT	EOS EXPONENT IN COSTING EF CHARGING SUPPLY (-)
206	E		
	1-12	RSTFM	REFERENCE UNIT FOR SCALING TF MOTOR-SET COST (MW) SEE CARD 156
	13-24	EC1	EOS EXPONENT IN COSTING TF MOTOR-SET (-)
	25-36	RSTFG	REFERENCE UNIT FOR SCALING TF GENERATOR SET COST (MW) SEE CARD 156

CARD TYPE	FORMAT	VARIABLE	DESCRIPTION/COMMENTS
	37-48	EC2	EOS EXPONENT IN COSTING TF GENERATOR-SET(-)
207	E 1-12	RSTFR1	REFERENCE UNIT FOR SCALING TF RECTIFIER COST (MVA) SEE CARD 159
	13-24	ECTF1	EOS EXPONENT IN COSTING TF RECTIFIER (-)
	25-36	RSTFR2	REFERENCE UNIT FOR SCALING TF RECTIFIER COST (GAM·MVA)
	37-48	ECTF2	EOS EXPONENT IN COSTING TF RECTIFIER RATED ON (GAM*MVA) (-)
208	E 1-12	RSMONB	REFERENCE UNIT FOR SCALING NB INJECTION SYSTEM MOTOR-SET COST (MW) SEE CARD 156
	13-24	RSGENNB	REFERENCE UNIT FOR SCALING NB GENERATOR SET (MW)
209	E 1-12	RSIPC	REFERENCE UNIT FOR SCALING NEUTRAL BEAM POWER SUPPLY COST (A) SEE CARD 196
	13-24	ECNB1	EOS EXPONENT IN COSTING NB POWER SUPPLY BASED ON CURRENT (-)
	25-36	RSPPC	REFERENCE UNIT, VOLT·AMPERE, FOR COSTING NEUTRAL BEAM POWER SUPPLY (MVA) SEE CARD 196
	37-48	ECNB2	EOS EXPONENT IN COSTING NB POWER SUPPLY BASED ON VOLT·AMPERES (-)
	49-60	RSNBC	REFERENCE VOLT-AMPERE FOR COSTING THE NB POWER CONVERSION SYSTEM (MVA) SEE CARD 197
	61-72	ECNB3	EOS EXPONENT IN COSTING NB POWER CONVERSION SYSTEM (-)

CARD TYPE	FORMAT	VARIABLE	DESCRIPTION/COMMENTS
210	E		
	1-12	RSLSC	REFERENCE UNIT FOR LOAD SMOOTHING CIRCUIT COST (MW) SEE CARD 157
	13-24	ECLSC1	EOS EXPONENT IN COSTING LOAD SMOOTHING CIRCUIT (-)
	25-36	ECLSC2	SECOND EOS EXPONENT IN COSTING LOAD SMOOTHING CIRCUIT (-)
211	E		
	1-12	RSSG	REFERENCE UNIT FOR STEAM GENERATORS COST (MW) SEE CARD 154
	13-24	ECSG	EOS EXPONENT IN COSTING STEAM GENERATORS (-)
	25-36	ECSTG	EOS EXPONENT IN COSTING STEAM TURBINE GENERATORS (-)
212	E		
	1-12	RSSUB	REFERENCE UNIT FOR COST OF SUBSTATION (MW) SEE CARD 169
	13-24	ECSUB1	EOS EXPONENT IN COSTING OF SUBSTATION (-)
	25-36	ECSUB2	SECOND EOS EXPONENT IN COSTING SUBSTATION (-)
213	E		
	1-12	ECHD1	EOS EXPONENT IN COSTING COOLING SYSTEM FOR VACUUM VESSEL, DIVERTOR, NEUTRAL BEAM, DEVICE SHIELD. SCALES (PEAK POWER/TEMPERATURE RISE) (-) SEE CARD 181, 182, 183, 185, REFERENCE 6
	13-24	ECHD2	EOS EXPONENT IN COSTING COOLING SYSTEM FOR VACUUM VESSEL, DIVERTOR, NEUTRAL BEAM, DEVICE SHIELD. SCALES (AVERAGE POWER/TEMPERATURE RISE)(-) SEE CARD 181, 182, 183, 185
	24-36	ECHD3	EOS EXPONENT IN COSTING COOLING SYSTEM FOR VACUUM VESSEL, DIVERTOR, NEUTRAL BEAM, DEVICE SHIELD. SCALES TEMPERATURE RISE(-) SEE CARD 181, 182, 183, 185

CARD TYPE	FORMAT	VARIABLE	DESCRIPTION/COMMENTS
	37-48	ECHD4	EOS EXPONENT IN COSTING COOLING SYSTEM FOR VACUUM VESSEL, DIVERTOR, NEUTRAL BEAMS, Cu COILS. SCALES TEMPERATURE RISE AND/OR 0.1 OF THE Cu COIL ENERGY(-) SEE CARD 181, 182, 183, 184
214	E 1-12	ECHD5	EOS EXPONENT IN COSTING COOLING SYSTEM FOR Cu COILS. SCALES TEMPERATURE RISE(-) SEE CARD 184
	13-24	ECHD6	EOS EXPONENT IN COSTING COOLING SYSTEM FOR Cu COILS. SCALES AVERAGE POWER PER PULSE(-) SEE CARD 184
	25-36	ECHD7	EOS EXPONENT IN COSTING COOLING SYSTEM FOR Cu TF COILS. SCALES (PEAK POWER/TEMPERATURE RISE)(-) SEE CARD 184
	37-48	ECHD8	EOS EXPONENT IN COSTING COOLING SYSTEM FOR Cu TF COILS. SCALES (PEAK POWER OVER TEMPERATURE RISE)(-) SEE CARD 184
215	E 1-12	ECTC1	EOS EXPONENT IN COSTING TRITIUM CLEAN-UP SYSTEM. SCALES VOLUME OF VACUUM VESSEL(-) SEE CARD 177
	13-24	ECTC2	EOS EXPONENT IN COSTING TRITIUM CLEAN-UP SYSTEM. SCALES VOLUME OF REACTOR CELL AND BASEMENT(-) SEE CARD 177
216	E 1-12	ECHR	EOS EXPONENT IN COSTING HEAT REMOVAL SYSTEM (-) SEE CARD 179, 180
217	E 1-12	ECGPC	EOS EXPONENT IN COSTING OF GENERAL PLANT COOLING SYSTEM (-) SEE CARD 186

CARD TYPE	FORMAT	VARIABLE	DESCRIPTION/COMMENTS
218	E 1-12	ECEAV	EOS EXPONENT IN COSTING EXPERIMENTAL AREA VENTILATION SYSTEM(-) SEE CARD 187
219	E 1-12	ECRW	EOS EXPONENT IN COSTING RADIOACTIVE WASTE HANDLING SYSTEM(-) SEE CARD 188
		NOTE:	IF DETAILED COST ESTIMATES ARE NOT AVAILABLE USE EC=1 FOR ALL EXPONENTS (THOSE PARAMETERS IN TABLE 5-16 BEGINNING WITH EC)

TABLE 5-17

COAST INPUT DECK -- UNIT COST COEFFICIENTS FOR REFERENCE YEAR, YRST INDIRECT COST

Only two input formats are used. An I is entered in the format column of the table for (12I6); while an E indicates (6E12.4)

CARD TYPE	FORMAT	VARIABLE	DESCRIPTION/COMMENTS
220	E		
	1-12	SAH	% OF BUILDING AND EQUIPMENT COST FOR SHIPPING AND HANDLING
	13-24	INSTAL	% OF BUILDING AND EQUIPMENT COST FOR INSTALLATION
	25-36	EDIA	% OF BUILDING AND EQUIPMENT COST FOR ENGINEERING, DESIGN, INSPECTION, AND ADMINISTRATION (EDIA)
	37-48	CONTIN	% OF BUILDING AND EQUIPMENT, SAH, INSTAL, AND EDIA COSTS FOR CONTINGENCY

TABLE 5-18

COAST INPUT DECK -- UNIT COST COEFFICIENTS FOR REFERENCE YEAR, YRST OPERATING COST

Only two input formats are used. An I is entered in the format column of the table for (12I6); while an E indicates (6E12.4)

CARD TYPE	FORMAT	VARIABLE	DESCRIPTION/COMMENTS
221	E		
	1-12	OCOST	COST OF ELECTRICITY FOR OPERATIONS ($\$\cdot KWh^{-1}$)
	13-24	UCTO1	UNIT COST OF TRITIUM ($\$\cdot(M\ CURIE)^{-1}$)
	25-36	UCTO2	UNIT COST CONSTANT FOR ANNUAL T_2 OPERATION ($)
222	E		
	1-12	PRICE	NET PRICE OF ELECTRICITY PRODUCED FOR SALE ($\$\cdot KWh^{-1}$)
	13-24	UCTO3	NET PRICE OF T_2 BRED FOR SALE ($\$\cdot(M\ CURIE)^{-1}$)

6.0 DISCUSSION OF OUTPUT

6.1 DESCRIPTION OF PRINTED OUTPUT

The printed output from COAST can be partitioned into three basic blocks of information. First, before any calculations are performed, the input data is printed with definitions and units of measure in the order in which the input cards were read. This not only documents the device parameters but also facilitates debugging the input if a run failure occurs. The next major block contains the output for each device sized. The order followed considers device and TF coil system first (index on I); then for each device the JT set of parameters are systematically processed (index on J), and finally the variations in the number of TF coils (index on K) in the toroidal field coil system are handled for each of the JT parameter sets as it is processed. When all the device specific output is completed, a set of summary tables are printed. The tables are patterned in the same indexing order described above, but they contain only basic device parameters to facilitate comparisons of specific device performance and cost with respect to the range over which these vary. Since the I/O edit is for the most part self-explanatory in the following text the device specific output and the summary tables will be examined.

The output for each device sized starts at the top of a page with a label identifying the device and TF coil system, the major and minor radii (m), the maximum field (T) at the conductor and the maximum field (T) at the conductor corresponding to no field margin on the plasma axis. Then the field (T) on the plasma axis is printed with the available field margin, if any. The basic plasma engineering options chosen are recounted at this point in deference to the user. (Paging back to check the input choices by data set is time consuming.) Two supplementary edits for additional information are provided at this point. If the TCT mode of plasma operation is chosen, the basic output corresponding to ignition is provided for comparison and the plasma parameters in the TCT mode for balance on neutral beam power are provided in most cases. The

plasma output parameters include particle densities, temperatures, time constants, energy and power densities, betas, and Q-values besides other basic plasma data. The output continues with information on each physical subsystem as it is sized. If an error condition is encountered (see Section 5.3), a message is immediately printed so these may occur anywhere in the device output.

Extensive edits on the neutral beam system, the fuel system sizing, the blanket/shield for hybrid DTHR devices, and the bundle divertor follow here if these systems are incorporated into the device design. At this point, a message is given to indicate the factor constraining the TF coil outer leg (percent ripple, neutral beam access, machine space, minimum fixed radius, or bundle divertor access). Also, the minimum OH bore required (including the space for the OH coils) is printed.

Detailed plasma and PFC time scenarios follow. For the plasma, current, inductance, resistance, volt-seconds, and voltages are tabulated as a function of time. For the PFC, corresponding currents, voltages, instantaneous powers, and accummulated energies are given. Additional PFC parameters include megamp-turns, volts/turn, energy from flywheel, stored energy, number of turns, number of circuits, resistances, self-inductances, and mutuals. The results of scaling the EF geometry are also tabulated.

A TF coil edit gives coil circumference; cross-sectional area; volume and mass for the conductor, structure and dewar; the structure-to-conductor ratio, coil tension, and centering force. Electrical parameters for the TF coils in terms of current power and stored energy follow. The next two edits give the heating and cooling parameters. Heat and electrical power generation in terms of power and energy are tabulated per pulse. For the cooling system, the peak and average thermal powers are compared to electrical load for each subsystem.

Sizing of the physical dimensions of the tokamak has been completed now, so the device radial geometry and vertical geometry by zone follows. Zone thickness and radial-vertical location are tabulated sequentially from the center of the torus/device midplane, respectively. Since the zone description is comprehensive, null zones for certain devices have 0.0 thickness. A few additional

plant parameters, which follow, include maximum field in OH bore, number of neutral beam arms, NB duct width and height, number of pumps, reactor cell dimensions and the estimated mass of the tokamak in tonnes.

With basic sizing calculations completed, three pages of detailed electrical parameters are tabulated for the various subsystems. This edit is frequently deleted in scoping studies as is the next table. Component costs in M$ are tabulated for over 56 subsystems. Besides the building and equipment costs, shipping and handling, installation, EDIA, and contingency costs are estimated for a total PACE cost in M$. A short edit then gives annual utility and fuel costs.

When the variation in the number of coils in the TF coil system has been exhausted (index on K), an additional short edit compares the D-shape geometry parameters for each set evaluated. The device specific output is complete.

6.2 DESCRIPTION OF THE IPLOT FILE

When sizing and costing of each device is complete, a binary record containing 23 pieces of data is written on the IPLOT file describing the essential features of the device. A single record is written for each device successfully sized in a run. This file can then be read by another program for production of plots, for statistical analyses, or for regression analysis to determine what basic functional relationships exist. Table 6-1 lists the variables in the order in which they are stored on tape with definitions.

6.3 DESCRIPTION OF ERROR FLAGS

In earlier versions of COAST a flag (GO/NO GO = 0/1) was set if some inconsistency was detected during the computer run. This flag has been expanded in COAST 4 to a system of flags to identify the inconsistencies that were encountered. Some flags are informative and do not stop the sizing process; others are fatal so the program continues with the next device after having printed all the information generated to that point. Sixteen flags apply to the device, five to the iterative calculations for plasma sizing, and four to the resulting plasma density requirements.

TABLE 6-1

VARIABLES STORED ON IPLOT TAPE FOR EACH DEVICE

ITEM	VARIABLE	DEFINITION
1	I	TF COIL TECHNOLOGY (-)
2	RO(I,J)	PLASMA MAJOR RADIUS (m)
3	A(J)	PLASMA MINOR RADIUS (m)
4	ASP(I,J)	ASPECT RATIO (-)
5	TFN(K)	NUMBER OF TF COILS (-)
6	JW(I,J)	NEUTRON WALL LOADING ($MW \cdot m^{-2}$)
7	TAU1(I,J)	
8	BTT(I,J)	FIELD ON PLASMA AXIS (T)
9	BCMM(I,J)	FIELD AT TF CONDUCTOR (T)
10	BETAH(I,J)	FULL FIELD BETA (%)
11	RANB(I,J)	MAXIMUM REQUIRED NB POWER (MW)
12	GMFA(I,J)	PULSE AVERAGE FISSILE PRODUCTION (Kg)
13	TRITP(I,J)	PULSE AVERAGE T_2 PRODUCTION (Kg)
14	TRITC(I,J)	PULSE AVERAGE T_2 CONSUMED (Kg)
15	FPA(I,J)	AVERAGE FUSION POWER (MW)
16	PAVE(I,J)	AVERAGE TOTAL HEAT PRODUCED (MW)
17	AHG(I,J)	AVERAGE TOTAL HIGH GRADE HEAT (MW)
18	APE(I,J)	AVERAGE ELECTRICAL PRODUCTION (MW)
19	OPEC(I,J)	AVERAGE ELECTRICAL CONSUMPTION (MW)
20	EPCON(I,J)	PULSE AVERAGE ELECTRICAL CONSUMPTION (MW)
21	APTOT(I,J,K)	COOLING TOWER RATING (MW)
22	COST(I,J,K)	BUILDING AND EQUIPMENT COST (M$)
23	ANNCST(I,J,K)	ANNUAL OPERATING COST (M$)

In the program, flag condition numbers are concatenated in two character units so that as many as five can be detected by one integer number of ten digits in the summary table. Of these five, one can be a plasma flag and one can be a density. If more than five flags are generated for a device, stars will print in the summary table indicating that a number has been produced which is too large for the field of ten digits. Table 6-2 identifies the range of error conditions detected by COAST-4.

TABLE 6-2

ERROR CONDITIONS RECOGNIZED BY COAST-4

FLAG NUMBER	REFERENCE AREA	ERROR CONDITION
01	DEVICE	OH COIL CURRENT DENSITY AND/OR HOOP STRESS LIMITED, i.e., NOT ENOUGH BORE LEFT AFTER SIZING TF COILS
02		OH MAXIMUM FIELD LIMIT EXCEEDED
03		TF COIL VERTICAL SIZING INADEQUATE TO ALLOW FOR REQUIRED COMPONENTS
04		HYBRID COPPER TF COIL VERTICAL SIZING INADEQUATE TO ALLOW FOR REQUIRED COMPONENTS
05		HYBRID SUPERCONDUCTING TF COIL VERTICAL SIZING INADEQUATE TO ALLOW FOR REQUIRED COMPONENTS
06		CENTER BORE SPACE INADEQUATE FOR TF COIL INNER LEGS
07		FIELD AT CONDUCTOR EXCEEDS LIMIT
08		WALL LOADING EXCEEDS LIMIT
09		CENTER BORE SPACE INADEQUATE FOR BUCKING CYLINDER
10		NO BORE AVAILABLE FOR OH
11		BORE AVAILABLE FOR OH IS LESS THAN MINIMUM REQUIRED
12		OH COILS ARE DRIVING EF COIL CURRENT THROUGH MUTUAL COUPLING
13		HYBRID COIL SYSTEM DEGRADED TO SINGLE COIL SYSTEM FROM TNS-5 TO A TNS-3
14		PLASMA TEMPERATURE TOO LOW FOR IGNITION
15		APPLIED FIELD AT PLASMA INITIATION TOO LOW
16		OH CURRENT PROFILE NOT TYPICAL
21	PLASMA	NO CONVERGENCE IN ATTEMPT TO BALANCE PLASMA PARAMETERS
22		T_{eff} GREATER THAN 70 keV
23		ALPHA POWER LESS THAN OR EQUAL TO ZERO

FLAG NUMBER	REFERENCE AREA	ERROR CONDITION
24		TRITON PLUS DEUTERON DENSITY LESS THAN OR EQUAL TO ZERO IN ATTEMPT TO BALANCE PLASMA
25		NEUTRAL BEAM POWER NOT REQUIRED
31	DENSITY	TOO MUCH NEUTRAL BEAM
32		RATIO H/D+T GREATER THAN 0.5
33		RATIO (H+D)/(D+T) GREATER THAN 0.5
34		D OR T DENSITY SHOULD BE LESS THAN 0

7.0 REFERENCES

1. J. Kesner and R. W. Conn, "Space-Dependent Effects on the Lawson and Ignition Conditions and Thermal Equilibria in Tokamaks," Nuclear Fusion 16 (1976) 397.

2. M. Fumelli and P. Raimbault, "Experimental and Theoretical Results of an Electrostatic Energy Recovery System for Neutral Beam Injectors," Proceedings of the 7th Symposium on Engineering Problems of Fusion Research (October 1977) Knoxville TN, p 1596.

3. H. J. Garber and J. S. Watson, "Tritium Systems Preliminary Design for TNS," Proceedings of the 7th Symposium on Engineering Problems of Fusion Research (October 1977) Knoxville TN, p 95.

4. T. F. Yang, G. W. Ruck, A. Y. Lee, G. Smeltzer, and T. V. Prevenslik, "Reactor Application of an Improved Bundle Divertor," Westinghouse Report WFPS-TME-104 (November 1978).

5. T. F. Yang, A. Y. Lee, G. W. Ruck, and W. J. Lange, "A Compact Poloidal Divertor Reference Design for TNS," Proceedings of the 7th Symposium on Engineering Problems of Fusion Research (October 1977), Knoxville TN, p 178; also see Westinghouse Report WFPS-TME-042 (August 1977).

6. R. W. Moses, Jr. and W. C. Young, "Analytic Expressions for Magnetic Forces on Sectored Toroidal Coils," Proceedings of the 6th Symposium on Engineering Problems of Fusion Research (November 1975) San Diego CA, p 917.

7. W. C. Brenner, "A New Constant Tension Toroidal Field Coil Design," Proceedings of the 1978 International Conference on Plasma Science (May 1978) Monterey CA.

8. H. J. Garber, "Costing Models for Tokamaks," Westinghouse Report WFPS-TN-057, (July 1977); also see "TNS Construction Planning and Design Activities Final Report," Westinghouse Report WFPS-TME-093 (May 1978).

9. See contributions to the Proceedings of the 7th Symposium on Engineering Problems of Fusion Research (October 1977) pp 76, 86, and 670; D. A. Sink, et al., "The COAST Code for the Costing and Sizing of D-T Burning Tokamaks," Supplement to Nuclear Fusion on the Conference and Workshop on Fusion Reactor Design Concepts, University of Wisconsin (October 1977) p 701; "Four Ignition TNS Tokamak Reactor Systems-Design Summary," Westinghouse Report WFPS-TME-071 (October 1977); and "Preliminary Study of the Economics of Enriching PWR Fuel with a Fusion Hybrid Reactor," Westinghouse Report WFPS-TME-095 (September 1978).

10. "Design Study of a Fusion-Driven Tokamak Hybrid Reactor for Fissile Fuel Production," Westinghouse Report WFPS-TME-043 (May 1977).

11. W. G. Clarke and H. L. Layman, "Power Systems Computing Center Engineering Computer Users' Guide," Westinghouse Report CF-48, Revision 1 (July 1974).

12. "Four Ignition TNS Tokamak Reactor Systems-Design Summary," Westinghouse Report WFPS-TME-071 (October 1977) pp 5-21 thru 5-25; also see J. E. Faulkner, "Shield Thicknesses for TNS Trade Studies," Westinghouse Report WFPS-TN-036 (January 1977).

13. J. W. H. Chi, private communication.

APPENDIX A
COAST COMPUTER CODE ABSTRACT

APPENDIX A
COAST COMPUTER CODE ABSTRACT

1. Program Identification: COAST, a code for the COsting And Sizing of Tokamaks

2. Description of Physical Problem Solved: COAST produces a generalized description of a D-T burning tokamak reactor and facility. In each complete calculation, the geometry, dimensions, and ratings of approximately fifty subsystems are determined. In addition, performance data associated with the tokamak and facility operation and a detailed cost estimate, subsystem-by-subsystem, are provided. The cost estimates include the evaluation of direct capital costs, indirect capital costs, time-related costs, and operating costs (Ref. 1). Devices which can be sized and costed include: TFTR (Tokamak Fusion Test Reactor), The Next Step (TNS) type of devices, fusion-fission hybrids, engineering demonstration reactors, power producing reactors, and commercial (power and fissile fuel breeding) reactors. Both the ignition mode and the neutral-beam-driven mode of plasma operation are modeled. The plasma engineering calculations involve zero-dimensional models which account for energy balance, particle balance, alpha-particle effects, slowing-down theory, plasma-plasma and beam-plasma fusion reaction rates, impurity effects, profile effects, and $n_e\tau_E$ scaling. The tokamak engineering calculations account for poloidal and toroidal magnetic field coil assemblies (both superconducting and copper conductors are possible), neutral beam injectors, blanket/shield assemblies, plasma fueling, divertors, heat dissipation systems, and related power supplies. The modeling for the shaping field coils includes the positioning of each coil relative to the other device components, as well as scaling the coil currents from a reference set of current magnitudes and positions (which are supplied as input and should be consistent with a coil set providing equilibrium and stability conditions for the plasma). The reactor cell containing the tokamak device, the turbine-generator plant and facility, and balance-of-plant systems are

taken into account. Figure 1 displays a flow diagram of the COAST code logic. Variations on the amount of output produced are allowed by input options. The output data may consist of simply a summary table of the main plasma, engineering, and cost data, or may be expanded to include a complete set of results characterizing the plasma (during burn as well as start-up); the neutral beam system; the fusile fuel system loads; blanket/shield assembly sizing; divertor parameters; poloidal field coil geometry, electrical data, self and mutual inductances, and time profiles of currents, voltages, powers, and energy utilization; toroidal field coil assembly and power supply data; heat and electrical power generation data; device radial and vertical geometry tables; detailed electrical data; component costs; annual operating costs; and a summary of the Fusion Reactor Economic Evaluation. The output also includes a listing of the input data. The output tables printed are clearly labeled with descriptive titles and appropriate units of measure. A complete output listing for a single case (one device, one size) produces up to 40 printed pages, while a summary output produces only 4 pages. The input data is composed of up to 250 cards. The input is lengthy since all of the numerical data (except for physical constants) must be supplied by the user.

3. Method of Solution: The COAST code "builds" the tokamak around the plasma and calculates the engineering features of the plasma support systems which allow the plasma to operate as parameterized in the plasma engineering calculations. Since the plasma engineering models include the time-dependent behavior of the plasma during pulse start-up, a complete description of the plasma is provided. As each component is added to the tokamak it is specified to be consistent with the plasma requirements, the components previously sized, and the engineering ground rules and assumptions supplied as input data. The ground rules and assumptions include magnetic field limits, mechanical stress limits, current density limits, geometry limits, etc. Messages are printed when ground rules are violated and depending on the violation the calculation continues or is terminated. The sizing of the device involves a number of iterative calculations to provide a self-consistent solution, and

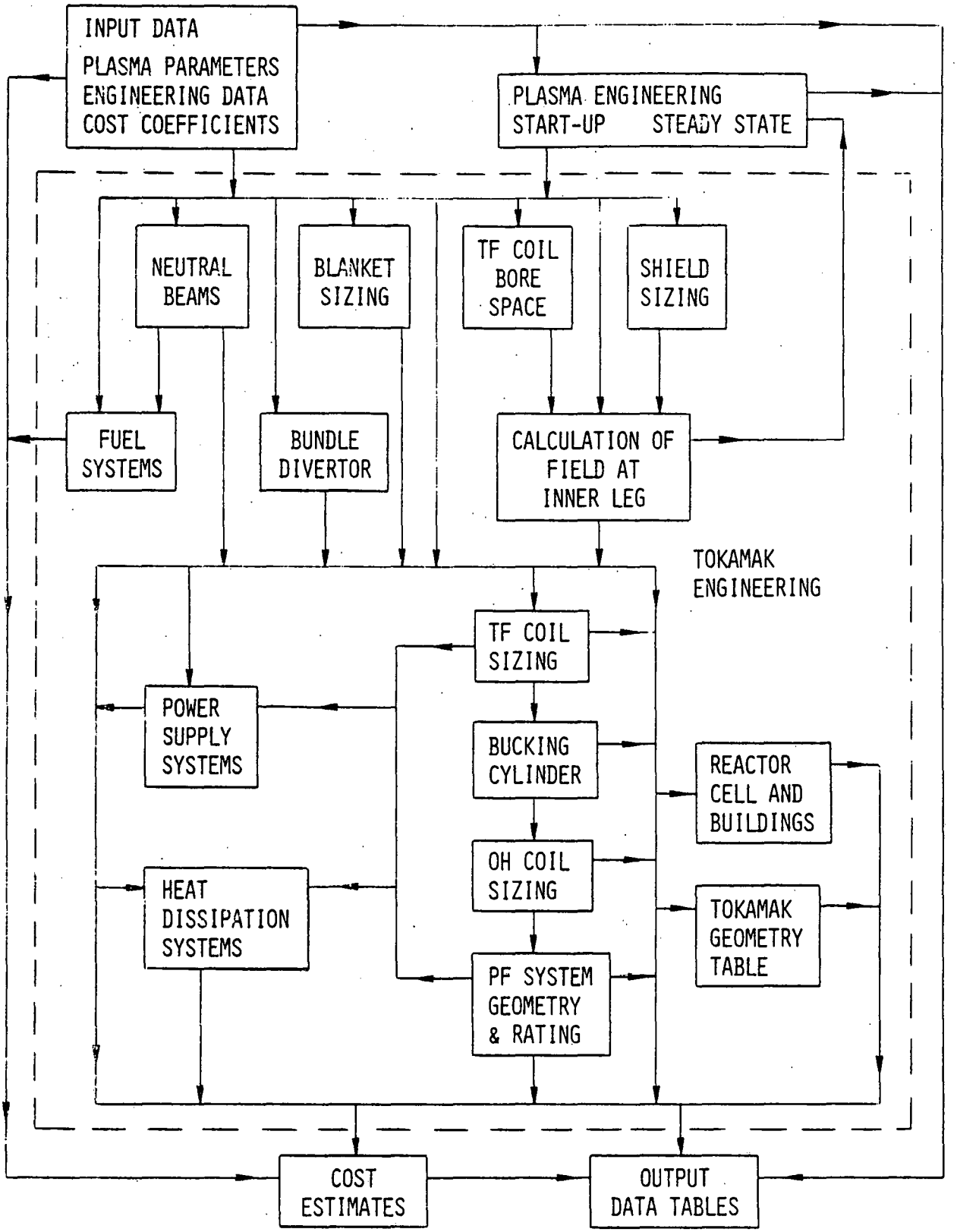

Figure 1. COAST Flow Diagram

requires one set of numerical integration calculations. Those calculations allow the mutual couplings between individual poloidal field coils and the plasma, as well as between the different coils themselves, to be accurately estimated. The sizing calculations are completed prior to the estimate of costs calculations. Costing involves the summation of component costs where size dependencies, unit cost data, and the sizing results are taken into account. Linear scaling with dimensions, masses, volumes, or ratings, as well as non-linear effects and economy-of-scale factors are involved. The COAST code allows up to five device types (defined by the toroidal field coil assembly and blanket/shield system), five device sizes per device type, and six different values for the number of toroidal field coil sets per size and type per calculation to be handled in a single run. The code is oriented toward both trade-off calculations involving the variation of key plasma and device parameters, as well as toward detailed calculations for a specific device type, size, and engineering features. The detailed calculations are designed to provide self-consistent, component-by-component data for lay-out work, the determination of space and geometric allocations and allowances, and values for the various power supply and cooling ratings.

4. Related Material: The COAST code presently in operation is the fourth version. Previous versions have been used in the study of TNS (Refs. 2-5). The present version has been employed in establishing the reference designs for DTHR (Refs. 6, 7), SLPX-III (Ref. 8), CTHR (Ref. 9), and CHR (Ref. 10). In addition, economic and engineering trade-off studies have been performed (Refs. 7, 11) with the aid of COAST.

5. Restrictions: The code calculations are limited to the sizing and designing of D-T burning tokamak devices. In order to generalize the description of the various subsystems and to provide the logic for various combinations of these subsystems in a given calculation, the sizing models are not detailed to the extent possible in a code modeling each individual system. The detail to which a subsystem is modeled has been dictated by the importance of that system in the various studies (see the reference list) and the effect the system has on the capital

cost associated with the device and facility. The present version of COAST has the following tokamak reactor sizing and engineering limitations: 1) neutral beam heating only, no RF heating modeled; 2) poloidal shaping field coils must be either completely within the toroidal field coil bore or completely outside of it and the turns must be completely superconducting or normal copper; 3) the blanket assembly used for energy multiplication and/or fissile fuel breeding is located on the outer half of the torus only; 4) the mechanical design of the magnetic field coils is limited and explicitly accounts for coil tension due to fields only; 5) the models do not explicitly account for remote maintenance considerations or features associated with the modularization of the device; 6) the turbine-generator plant and the various heat transfer loops associated with the balance-of-plant are not modeled in enough detail to provide self-consistent mechanical and thermal engineering data; 7) the modeling for pellet fueling is not incorporated; 8) a completely generalized operating cost model is not incorporated. A number of existing models in COAST have been identified as requiring an update incorporating existing calculational models; i.e., 1) refined mechanical design model for the toroidal field coil assembly, 2) upgraded models for magnetic field coil power supplies, 3) a more generalized fuel handling system model, and 4) a generalized model accounting for all operating costs.

6. Computer: CDC-7600 and the National Magnetic Fusion Energy Computer (also a CDC-7600) at Lawrence Livermore Laboratory, Livermore, CA.

7. Running Time: Up to one second of CDC-7600 time is required for a calculation involving a single device for a given size and one set for toroidal field coils. For multiple device sizing and costing calculations in a single run, this time is greatly reduced; e.g., five device sizes (vary major and minor radius) for a single device type and one toroidal field coil set (fixed number of TF coils — e.g., 12) will require approximately two seconds of CDC-7600 time. Compilation requires times between 11 and 14 seconds.

8. Programming Languages: The code is written in FORTRAN IV and requires no special computer features.

9. Operating System: The code runs under SCOPE 2.1.5, Level 270.70 with the FTN 4.6 Compiler, Level 452 at the Westinghouse Power Systems Computer Center using a CDC-7600. To compile the code on the CDC-7600 at MFECC, it was necessary to employ a LASL privately supported version of SLOPE2 and FTN compiler with ancillary routines, some of which were modified to handle the enormous table of variable names used in COAST. Extensive private communication with, and support from, Kirby Fong at MFECC was required to eventually compile the code. An executable file is presently available for COAST-4 on the CDC-7600, both at PSCC and MFECC.

10. Machine Requirements: One additional output file is defined in addition to two standard input/output files. The small core memory storage requirement on the Westinghouse CDC-7600 is 106500 octal words and on the MFECC is 143100 octal words.

11. Material Available: Source deck, test cases, and the results of executed test cases are available for COAST-3 upon request. Upon completion of the user's manual, the COAST-4 deck, test cases, results, and the manual will be available upon request.

12. Acknowledgement: This work was supported by the U.S. Department of Energy and the Westinghouse Electric Corporation.

13. References:

[1] S. C. Schulte, T. L. Willke, and J. R. Young, "Fusion Reactor Design Studies-Standard Accounts for Cost Estimates," Pacific Northwest Laboratory Report PNL-2648, May 1978.

[2]"Four Ignition TNS Tokamak Reactor Systems - Design Summary," Westinghouse Report WFPS-TME-071, October 1977; also see the Proceedings of the 7th Symposium on Engineering Problems of Fusion Research, Knoxville, TN, October 1977 where several contributions were made related to TNS/COAST results.

[3]D. A. Sink, E. M. Iwinski, D. L. Chapin, and G. Gibson, "The COAST Code for the Costing and Sizing of D-T Burning Tokamaks," Supplement to Nuclear Fusion on the Conference and Workshop on Fusion Reactor Design Concepts, University of Wisconsin, October 1977, p 701.

[4]D. L. Chapin, H. J. Garber, G. Gibson, E. M. Iwinski, and D. A. Sink, "Reactor System Size and Cost Trends for TNS Tokamaks", Trans. Am. Nucl. Soc. 27, 24 (1977).

[5]D. A. Sink, and E. M. Iwinski, "A Computer Code for the Costing and Sizing of TNS Tokamaks," the Proceedings of the 7th Symposium on Engineering Problems of Fusion Research, Knoxville, TN, October 1977, p 86.

[6]J. L. Kelly, et al., "Conceptual Design of a Demonstration Tokamak Hybrid Reactor (DTHR)--September 1978," Westinghouse Report WFPS-TME-107, December 1978.

[7]D. A. Sink and G. Gibson, "Scoping and Sensitivity Analyses for the Demonstration Tokamak Hybrid Reactor (DTHR)," Westinghouse Report WFPS:TME-79-012, March 1979.

[8]Work performed by Westinghouse for the Princeton Plasma Physics Laboratory which provided a preliminary scoping analysis of SLPX-III - A Superconducting Long-Pulse Experiment - DT Burning Version.

[9]Work performed by Westinghouse for DoE on the Commercial Tokamak Hybrid Reactor (CTHR), Westinghouse Report to be issued on the study results.

[10]D. A. Sink, "A Potential Commercial Reactor Based on a Small Tokamak Hybrid Reactor," Trans. Am. Nucl. Soc. 32, 26 (1979).

[11]J. L. Kelly, "Preliminary Study of the Economics of Enriching PWR Fuel With a Fusion Hybrid Reactor," Westinghouse Report WFPS-TME-095, September 1978.

Y-K. M. Peng
R. L. Reid
T. E. Shannon
D. Steiner
Oak Ridge National Laboratory
P.O. Box Y
Oak Ridge TN 37830

N. A. Amherd
F. R. Scott
Electric Power Research Institute
3412 Hillview Avenue
Palo Alto CA 94304

R. E. Aronstein
Bechtel
P.O. Box 3965
San Francisco CA 94119

J. E. Baublitz
J. F. Clarke
F. E. Coffman
C. R. Head
M. R. Murphy
M. Roberts
Office of Fusion Energy
Department of Energy
Washington DC 20545

Roger Boom
I. Sviatoslavsky
R. W. Conn
G. Kulcinski
University of Wisconsin
Madison WI 53706

R. N. Cherdack
Burns & Roe, Inc.
283 Highway 17
Paramus NJ 07652

D. Cohn
Massachusetts Institute of
Technology
Cambridge MA 02139

S. O. Dean
Science Applications Inc.
8400 Westpark Drive
McLean VA 22101

J. W. French
H. P. Furth
D. L. Jassby
P. Reardon
R. Mills
J. File
Princeton University
P.O. Box 451
Princeton NJ 08540

A. Gibson
R. Hancox
Culham Laboratory
Abington, Oxon, OX14 3DB
United Kingdom

D. G. McAlles, Manager
ETF Systems Interface
Research and Technical Center
2955 George Washington Way
Richland WA 99352

P. H. Sager, Jr.
D. Graumann
J. Gilleland
General Atomic Co.
P.O. Box 81608
San Diego CA 92138

W. M. Stacey, Jr.
School of Nuclear Engineering
Georgia Institute of Technology
Atlanta GA 30332

C. Taylor
J. D. Lee
W. R. Meier
Dr. R. W. Moir
Dr. M. J. Monsler
Lawrence Livermore Laboratory
University of California
P.O. Box 808
Livermore CA 94550

B. K. Jensen
Research and Development
Public Service Electric & Gas Company
80 Park Place
Newark NJ 07101

J. Mockler
National Energy Software Center
ARgonne National Laboratory
9700 S. Cass Avenue
Argonne IL 60439

G. H. Miley
Nuclear Engineering
University of Illinois
Urbana IL 61801

D. M. Weldon
University of California
Los Alamos Scientific Laboratory
P.O. Box 1663, Mail Stop 464
Los Alamos NM 87544

J. L. Usher
Brookhaven National Laboratory
Upton, Long Island NY 11973

T. Kammash
Department of Nuclear Engineering
University of Michigan
Ann Arbor MI 48109

Dr. G. Casini
ISPRA Establishment
21020 Ispra (Varese) Italy

Dr. K. Schmitter
Max-Planck-Institute Fue Plasmaphysik
8046 Garching Bei Munchen
Federal Republic of Germany

R. Krakowski
Los Alamos Scientific Laboratory
P.O. Box 1663
Los Alamos NM 87544

Dr. S. K. Ghose
Bechtel National, Inc.
P.O. Box 3965
50 Beale Street
San Francisco CA 94119

Dr. K. A. Brueckner
Department of Physics, Mail Stop B-019
University of California
LaJolla CA 92092

Dr. J. A. Maniscalco
TWR
1 Space Park
Mail Station R4/2136
Redondo Beach CA 90278

Dr. D. H. Berwald
Exxon Research & Engineering Company
1900 Linden Avenue
P.O. Box 8
Linden NJ 07036

NES Library
AESD Library
ARD Library
R&D Center Library