27
11/21/79
24 to NTIS

MASTER

ANL
EES

ARGONNE NATIONAL LABORATORY

ENERGY AND ENVIRONMENTAL SYSTEMS DIVISION

DISTRIBUTION OF THIS DOCUMENT IS UNLIMITED

DISCLAIMER

This report was prepared as an account of work sponsored by an agency of the United States Government. Neither the United States Government nor any agency Thereof, nor any of their employees, makes any warranty, express or implied, or assumes any legal liability or responsibility for the accuracy, completeness, or usefulness of any information, apparatus, product, or process disclosed, or represents that its use would not infringe privately owned rights. Reference herein to any specific commercial product, process, or service by trade name, trademark, manufacturer, or otherwise does not necessarily constitute or imply its endorsement, recommendation, or favoring by the United States Government or any agency thereof. The views and opinions of authors expressed herein do not necessarily state or reflect those of the United States Government or any agency thereof.

DISCLAIMER

Portions of this document may be illegible in electronic image products. Images are produced from the best available original document.

The facilities of Argonne National Laboratory are owned by the United States Government. Under the terms of a contract (W-31-109-Eng-38) among the U. S. Department of Energy, Argonne Universities Association and The University of Chicago, the University employs the staff and operates the Laboratory in accordance with policies and programs formulated, approved and reviewed by the Association.

MEMBERS OF ARGONNE UNIVERSITIES ASSOCIATION

The University of Arizona
Carnegie-Mellon University
Case Western Reserve University
The University of Chicago
University of Cincinnati
Illinois Institute of Technology
University of Illinois
Indiana University
The University of Iowa
Iowa State University
The University of Kansas
Kansas State University
Loyola University of Chicago
Marquette University
The University of Michigan
Michigan State University
University of Minnesota
University of Missouri
Northwestern University
University of Notre Dame
The Ohio State University
Ohio University
The Pennsylvania State University
Purdue University
Saint Louis University
Southern Illinois University
The University of Texas at Austin
Washington University
Wayne State University
The University of Wisconsin-Madison

NOTICE

This report was prepared as an account of work sponsored by an agency of the United States Government. Neither the United States nor any agency thereof, nor any of their employees, makes any warranty, expressed or implied, or assumes any legal liability or responsibility for any third party's use or the results of such use of any information, apparatus, product or process disclosed in this report, or represents that its use by such third party would not infringe privately owned rights. Mention of commercial products, their manufacturers, or their suppliers in this publication does not imply or connote approval or disapproval of the product by Argonne National Laboratory or the United States Government.

ANL/EES-TM-65

ARGONNE NATIONAL LABORATORY
Argonne, Illinois 60439

PERFORMANCE AND COST ANALYSIS OF A HYDRIDE AIR CONDITIONING SYSTEM

Prepared by

Richard Gorman

TRW Energy Systems Group
McLean, Virginia 22101

for

Argonne National Laboratory
under Argonne Purchase Order No. 898403

April 1977

DISCLAIMER

This book was prepared as an account of work sponsored by an agency of the United States Government. Neither the United States Government nor any agency thereof, nor any of their employees, makes any warranty, express or implied, or assumes any legal liability or responsibility for the accuracy, completeness, or usefulness of any information, apparatus, product, or process disclosed, or represents that its use would not infringe privately owned rights. Reference herein to any specific commercial product, process, or service by trade name, trademark, manufacturer, or otherwise, does not necessarily constitute or imply its endorsement, recommendation, or favoring by the United States Government or any agency thereof. The views and opinions of authors expressed herein do not necessarily state or reflect those of the United States Government or any agency thereof.

Work Sponsored by
U.S. DEPARTMENT OF ENERGY

DISTRIBUTION OF THIS DOCUMENT IS UNLIMITED

This report is available from

National Technical Information Service
U.S. Department of Commerce
5285 Port Royal Road
Springfield, Virginia 22161

TABLE OF CONTENTS

Page

1.0 INTRODUCTION AND SUMMARY 1-1

2.0 METAL HYDRIDE PRINCIPLES AND HEAT PUMP OPERATION..... 2-1

2.1 METAL HYDRIDE PROPERTIES..... 2-1

2.2 HYDRIDE HEAT PUMP OPERATION..... 2-4

3.0 BASELINE SYSTEM DESIGN AND PERFORMANCE..... 3-1

3.1 BASELINE SYSTEM DESCRIPTION..... 3-1

3.1.1 Hydride Bed/Heat Exchanger Design..... 3-1

3.1.2 Valve Design and Fluid Flows..... 3-5

3.1.2.1 Hydrogen..... 3-5

3.1.2.2 Water..... 3-9

3.1.3 Pumps..... 3-9

3.2 SYSTEM PERFORMANCE..... 3-11

3.2.1 Absorption/Desorption Cycle Heat Transfer..... 3-11

3.2.2 Regeneration..... 3-13

3.2.3 System Coefficient of Performance..... 3-15

4.0 HYDRIDE AIR CONDITIONER SIZE, WEIGHT AND COST ESTIMATE..... 4-1

4.1 HYDRIDE BED/HEAT EXCHANGER MODULES..... 4-1

4.2 FLOW CONTROL VALVES..... 4-3

4.2.1 Water Flow Control Valve..... 4-3

4.2.2 Hydrogen Flow Control Valves..... 4-3

4.3 REGENERATION PUMPS..... 4-3

4.4 SYSTEM CONTROLS..... 4-3

4.5 BASELINE SYSTEM COST AND WEIGHT SUMMARY..... 4-4

5.0 HYDRIDE AIR CONDITIONER VERSUS CONVENTIONAL ABSORPTION..... 5-1
AIR CONDITIONERS

6.0 PERFORMANCE IMPROVEMENT POTENTIAL AND NEEDS FOR FUTURE WORK 6-1

REFERENCES..... R-1

LIST OF FIGURES

NUMBER	TITLE	PAGE
1	Hydrogen Content Versus Pressure	2-1
2	A Schematic Representation of Formation of Ternary Hydride from a Binary Compound	2-2
3	H_2 Pressure vs Inverse Kelvin Temperature	2-3
4a	Theoretical Hydride Heat Pump Operation	2-5
4b	Theoretical Hydride Heat Pump Cycle	2-6
5	Heat Exchanger-Hydride Bed Design	3-2
6	A Hydride Bed/Heat Exchanger Module	3-3
7a	Hydrogen, Water Flow During Cycle Step 1	3-6
7b	Hydrogen, Water Flow During Regeneration Cycle Steps 2 and 4	3-7
7c	Hydrogen, Water Flow During Cycle Step 3	3-8
8	Water Valve	3-10
9	Schematic of Bed Temperatures and Hydrogen Pressures During Absorption/Desorption Cycles (Steps 1 and 3)	3-12
10	Overall Layout of Hydride Air Conditioner	4-2
11	Conventional 100-Ton Absorption Air Conditioner	5-2
12	Absorption Chiller Prices	5-4

LIST OF TABLES

NUMBER	TITLE	PAGE
1	Thermal Conductivity of Various Substances.....	3-4
2	Mean Temperatures During Absorption/Desorption..... Cycles (Steps 1 and 3)	3-14
3	System Cost Summary.....	4-4
4	System Weight Summary.....	4-4
5	Hydride Air Conditioner Operating Conditions..... and Performance Versus Conventional Absorption System (100-Ton Capacity)	5-3

1.0 INTRODUCTION AND SUMMARY

This report presents the results of a performance and cost analysis of a metal hydride air conditioning (heat pump) system as compared to conventional absorption heat pumps. The system analyzed represents one of several possible implementations of the Hydride Conversion and Storage System (HYCSOS) concept developed by the Argonne National Laboratory.

Due to the preliminary state of development of the HYCSOS concept, a major part of the effort was to develop a baseline design for a commercially-practical hydride air conditioner driven by solar energy obtained by concentrating collectors. A 100-ton design capacity was arbitrarily chosen to coincide with the size of commercially available Lithium Bromide absorption heat pumps. Typical commercial-practice heat transfer rates, water flow rates and temperature drops were used in developing the baseline design. Since minimum system capital cost was an objective, the baseline system relied to the maximum extent possible on established engineering designs for heat exchangers, pumps and valving.

The baseline system cost estimate was developed from component costs derived from manufacturers/vendors information, from commercial catalogs and, where necessary, from secondary sources (e.g., Chemical Engineers Handbook).

The resultant 100-ton baseline system was estimated to have a coefficient-of-performance (COP) of 0.46 at a total cost of $17,292. In the baseline system, the cost of the hydride represents 51% of the total cost. The above estimates may be compared to a 100-ton Lithium Bromide absorption heat pump which exhibits a COP of 0.68 and is commercially priced at $20,000.

The following section presents a brief discussion of metal hydride properties important to heat pump design and describes the operation of the metal hydride air conditioner. Section 3.0 presents the baseline system design and performance estimates, and Section 4.0 details the cost estimate. Section 5.0 compares the baseline system performance/cost estimates with conventional systems, and Section 6.0 discusses technology areas where progress is needed.

2.0 METAL HYDRIDE PRINCIPLES AND HEAT PUMP OPERATION

2.1 METAL HYDRIDE PROPERTIES

Metal hydrides have been studied as hydrogen storage media in various energy system applications since the discovery of their hydriding properties less than ten years ago. The property of interest is that, at a given temperature and constant pressure, the alloys XNi_5 and XCo_5 (where X is generally but not always a rare earth metal) become XNi_5H_6 and XCo_5H_6 with the release of substantial amounts of heat. With heat input the process is reversible. Two metal hydrides with different properties can be used for heat and hydrogen storage in heat pumps and other energy conversion systems. The hydrides $LaNi_5$ and $CaNi_5$ are currently used in the Hydride Conversion and Storage System (HYCSOS) conceived by the Argonne National Laboratory (Reference 1). As an example, $LaNi_5H_{0.2}$ yields 94 Btu's per pound of alloy in the process of absorbing hydrogen to become $LaNi_5H_{6.7}$.

At constant temperature, the hydriding process consists of two distinct phases, α and β, with a mixed phase between. Figure 1 illustrates the constant temperature process. In the distinct α phase, increasing amounts

Figure 1. Hydrogen Content Versus Pressure

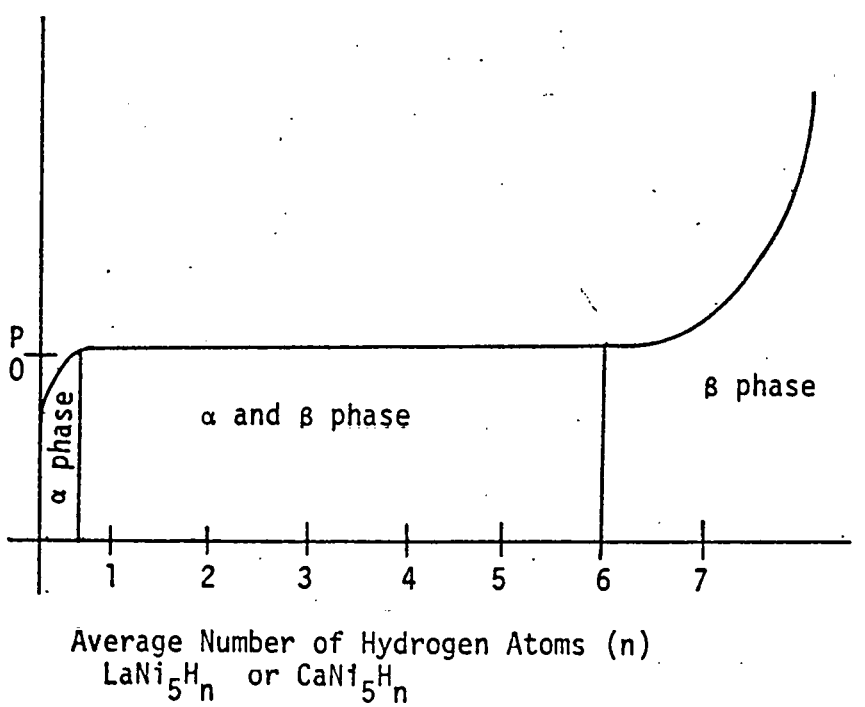

of hydrogen are dissolved in the metal alloy ($LaNi_5$ or $CaNi_5$) with an increase in pressure to P_o. The distinct β phase starts at pressure P_o when $LaNi_5H_{6+}$ or $CaNi_5H_{6+}$ has completely formed. Between the two distinct phases there is a pressure plateau region (constant pressure P_o) where both phases co-exist and the actual chemical hydriding occurs ($XNi_5 \rightarrow XNi_5H_6$). During this phase, hydrogen absorption (desorption) results in approximately 80 Btu's per pound of hydride to be released (input).

Figure 2 (from Reference 2) presents a schematic representation of the structure of the α and β phases.

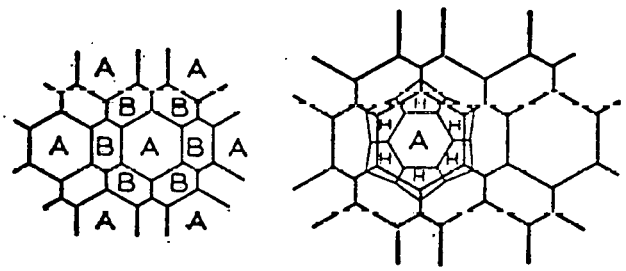

Figure 2. A schematic representation of formation of ternary hydride from a binary compound AB_n ($n \geq 1$) of transition elements. Only element A is assumed to form a stable binary hydride. On absorption, the lattice expands to accomodate the hydrogen.

As illustrated, the formation of the β phase involves a volume increase. This volume increase strains the crystal lattice and results in a rapid breakdown of the bulk hydride into a fine 6-micron powder which has a void fraction greater than 60%. Because of this porosity and grain size, the hydride metal alloys are capable of very high hydrogen reaction rates.

Hydrogen pressure and temperature relationships have been established for several hydrides. The pressure/temperature relationships for $LaNi_5H_n$ and $CaNi_5H_n$ used in this analysis are presented in Figure 3 (Reference 3). The following physical properties were used for both hydride alloys (Reference 4):

- Density 0.1 lb/in^3
- Thermal Conductivity 0.27 Btu/Ft °F hr
- Specific Heat 0.11

Figure 3. H_2 Pressure vs. Inverse Kelvin Temperature

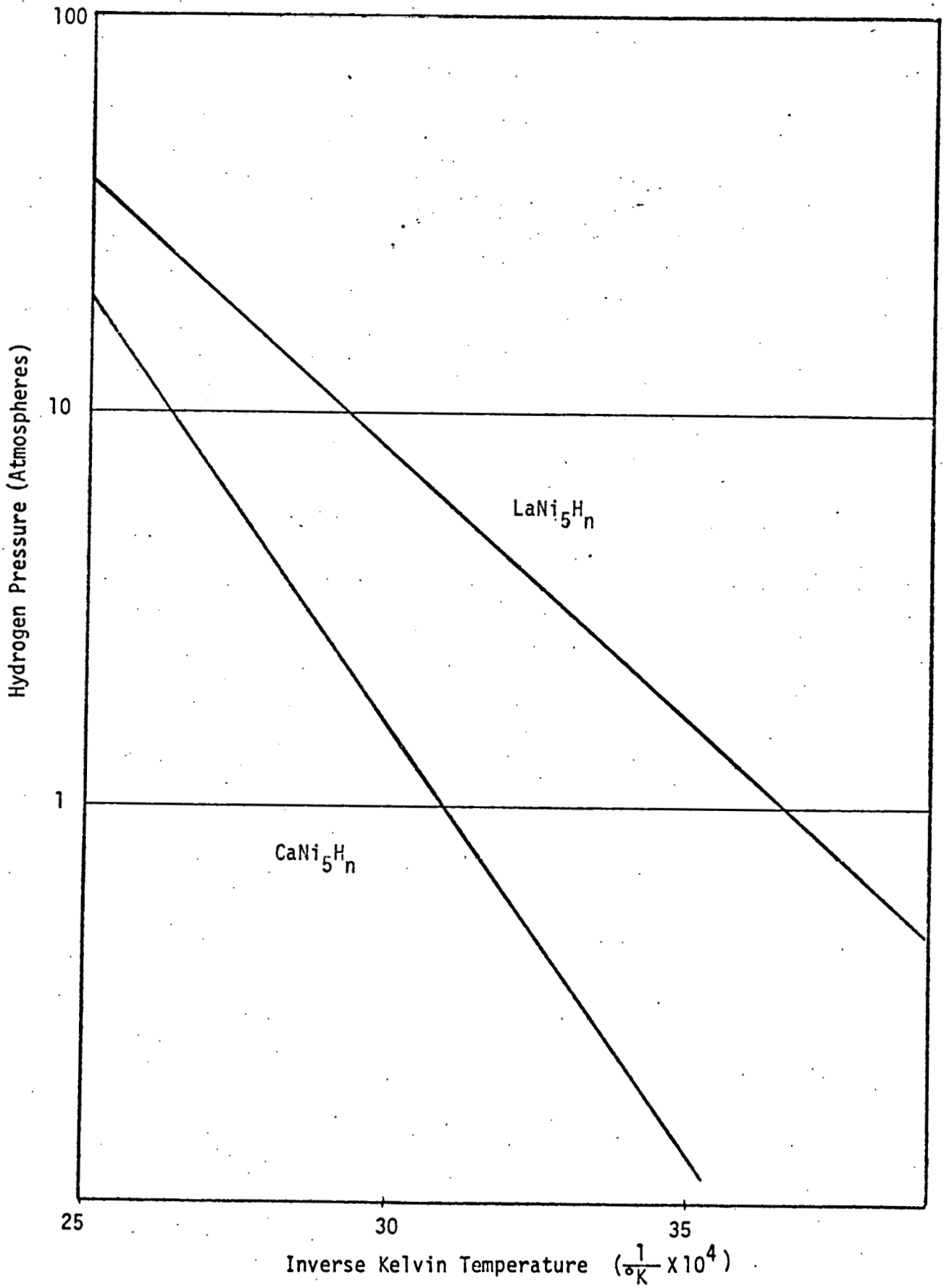

The cost of $LaNi_5$ has been estimated to be \$5-7/lb (Reference 5), while $CaNi_5$ has been estimated to cost \$2.50/lb (Reference 3). This range of materials cost combined with the heat storage capability of 80 Btu/pound implies a prohibitively high cost for hydride thermal storage - \$30,000 to \$90,000 per million Btu. On the other hand, the high reaction rate of the absorption (desorption) process implies that a relatively small amount of hydride in separate beds could be rapidly cycled and used as a cost-effective air conditioning system (heat pump) (Reference 1).

2.2 HYDRIDE HEAT PUMP OPERATION

In its simplest form a hydride heat pump would consist of two hydride beds (each containing a different hydride) interconnected to allow hydrogen gas to flow between them. Means would be provided for the input of high temperature heat (from solar concentrating collectors); for heat rejection to or heat acquisition from the atmosphere; and for heat input to or heat rejection from the building. The heat pumping action of the system involves a four-step process. Figures 4a and 4b illustrate the theoretical process which is described below.

In the first step of the process, high temperature (solar) heat is applied to the first bed causing it to desorb hydrogen at high pressure. Because of the pressure differential between the beds, the hydrogen flows to the second bed which is at an intermediate temperature. The hydrogen is absorbed by the second bed with a release of medium temperature heat. In order to keep the second bed constant at the intermediate temperature, the released heat is rejected to the building (heating mode) or to the atmosphere (cooling mode).

During the second step the hydrogen interconnect is closed, and the two beds are cooled, the first bed to an intermediate temperature and the second bed to a low temperature. This step is necessary for the correct pressure differential to exist between the beds for reverse hydrogen and heat flow during the next step.

The hydrogen interconnect is opened again during the third step. Heat from the building (cooling mode) or from the atmosphere (heating mode) causes the second bed to desorb hydrogen at a pressure sufficient to cause it to flow to the first bed which is now at an intermediate temperature.

Figure 4a. Theoretical Hydride Heat Pump Operation

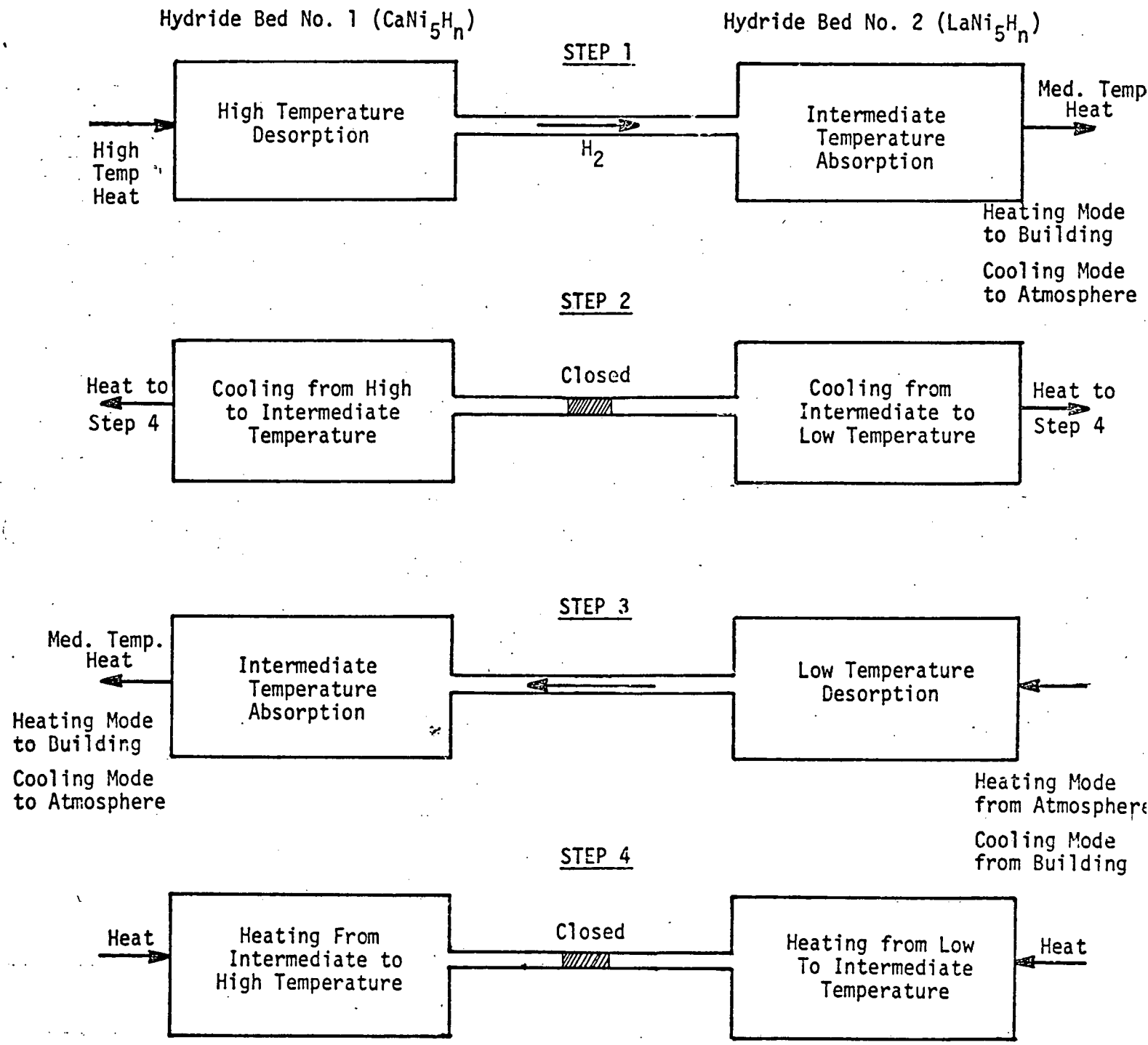

Figure 4b. Theoretical Hydride Heat Pump Cycle

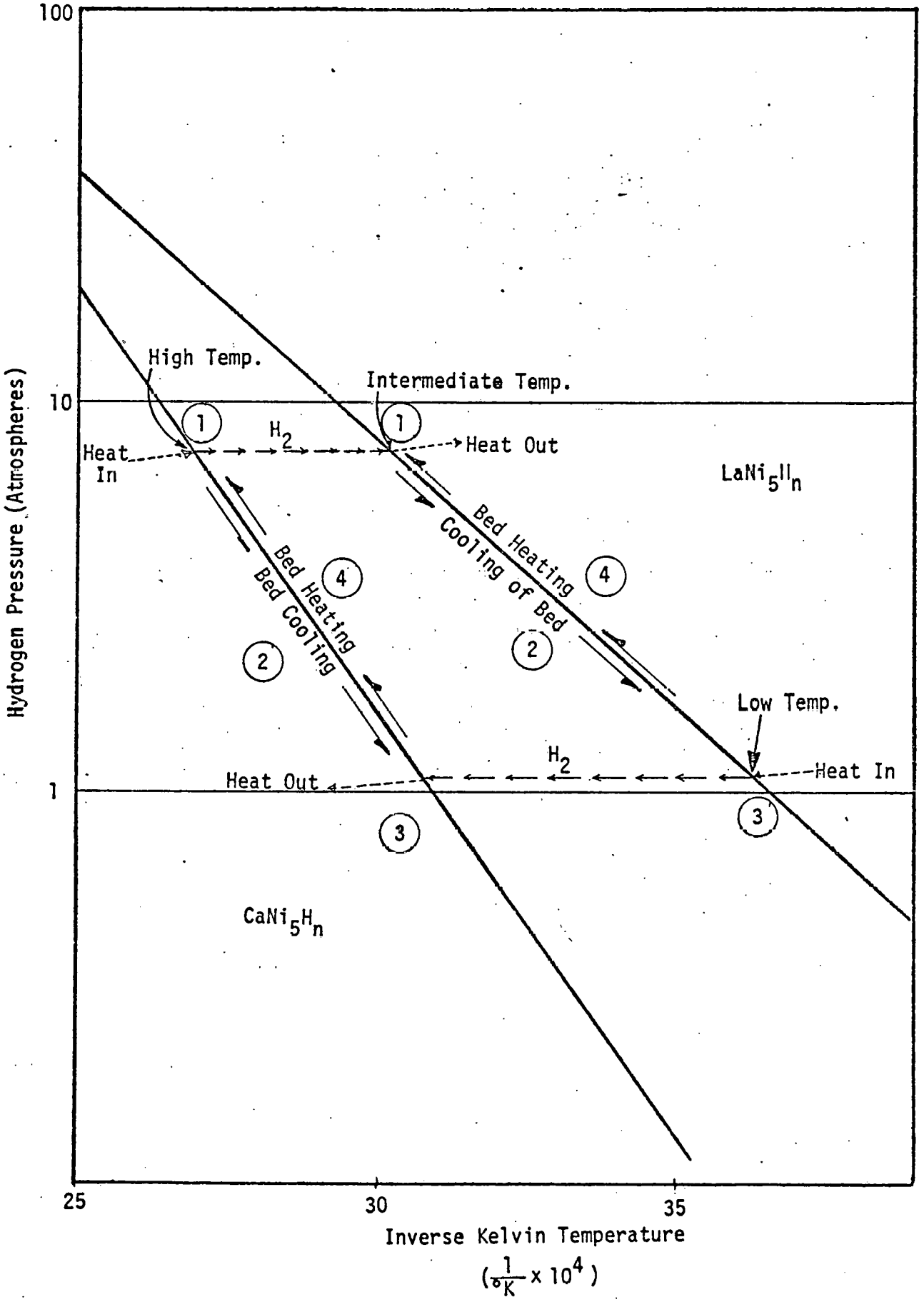

The hydrogen is absorbed by the first bed with the release of medium temperature heat. To keep the first bed constant at the intermediate temperature, the released heat is rejected to the building (heating mode) or to the atmosphere (cooling mode).

At this point the hydrogen interconnect is closed and step four begins. During this step both beds are heated - the first bed to a high temperature and the second bed to an intermediate temperature - in preparation for the start of the next four-step cycle.

It should be noted that the coefficient of performance (COP) of this theoretical cycle is 1.0 for cooling (2.0 for heating) if the net energy to heat and cool the beds (steps 2 and 4) is zero. In other words, the heat added to the first bed at high temperature (step 1) is equal to the heat added to the second bed at low temperature (step 3) and the sum is rejected to the atmosphere at the intermediate temperature (steps 1 and 3).

To provide a near-continuous heat pumping action the HYCSOS concept (Reference 1) uses four hydride beds, two with $LaNi_5H_n$ and two with $CaNi_5H_n$. Thus, the respective beds can exchange heat during the temperature change periods (steps 2 and 4); and with the exception of these periods the heat pumping action is continuous.

3.0 BASELINE SYSTEM DESIGN AND PERFORMANCE

The previous section described a theoretical hydride heat pump and its operation. A real hydride heat pump, however, must accommodate the engineering compromises necessary to interface it with the driving energy source (solar) and with the building being heated and cooled. Practicable designs for the required heat exchangers and hydride beds impact the operating temperatures and heat transfer rates. Therefore, a baseline design was developed which could be used in estimating the performance and cost of the system.

The baseline design was developed for a hydride air conditioner with a nominal capacity of 100 tons. This capacity was arbitrarily chosen to allow a direct cost comparison with conventional absorption air conditioners that are now available for commercial building service.

To minimize the amount (and cost) of hydride used in the system the hydride bed absorption and desorption times were assumed to be one minute. A 20°F temperature rise in the building cooling loops was assumed. This assumption is in line with general commercial practice for minimizing fluid flow losses, fluid flow pipe size and cooling coil size and cost. Also in line with general commercial practice, the design film temperature drops in liquid heat exchangers was assumed to be approximately 10°F.

The following sections describe the major components of the baseline system and present an estimate of the baseline system performance.

3.1 BASELINE SYSTEM DESCRIPTION

3.1.1 Hydride Bed/Heat Exchanger Design

For the baseline system, a design was chosen which integrates the hydride beds with the water passages necessary for removing/adding the heat of absorption/desorption (Section 2.2 - Steps 1 and 3) and for heating and cooling the beds (Section 2.2 - Steps 2 and 4). Figures 5 and 6 illustrate this integral hydride bed/heat exchanger design.

The hydride material has a low thermal conductivity (see table 1). In order to augment the thermal conductivity of the hydride, it is imbedded in an open pore foam of 6061 aluminum. This foam has 40 pores per inch,

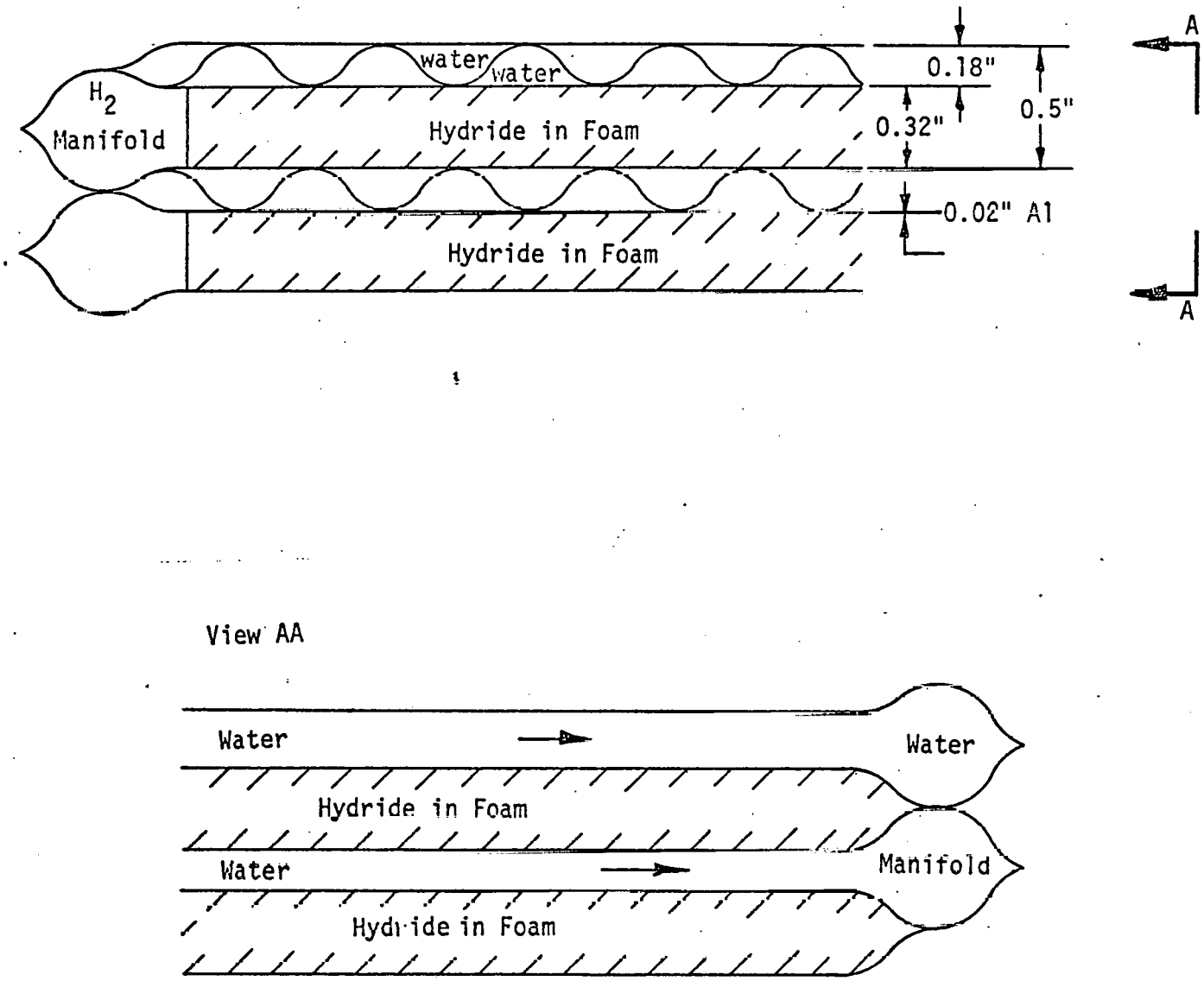

Figure 5. Heat Exchanger-Hydride Bed Design

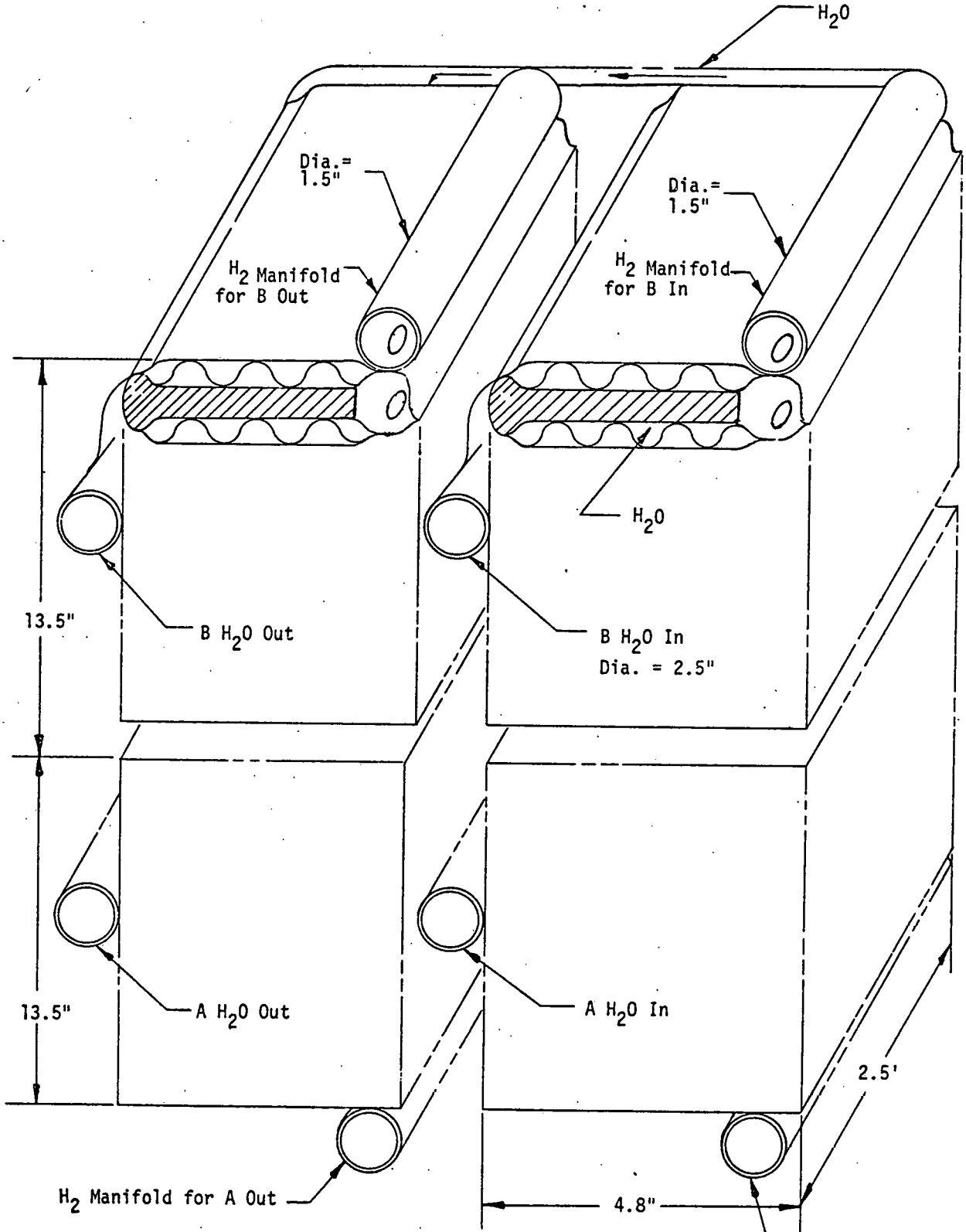

Figure 6. A Hydride Bed/Heat Exchanger Module

Table 1. Thermal Conductivity of Various Substances

(Btu/Ft °F Hour)

Silver	242
Copper	232
Aluminum	130
Nickel	36
Titanium	9
Duralumin	64
Stainless Steel 301	8
$LaNi_5$ powder	.27
Hydrogen (212°F)	.124
Air	.014
Fiberglass Insulation	.03
Cork	.02

has a 90% void fraction and has a thermal conductivity of 7 Btu/Ft°F Hour (Reference 6). A layer of foam 0.16 inches thick with the voids filled with hydride will absorb/desorb in 60 seconds at a rate of 10,000 Btu/Ft^2 Hour with a temperature drop across the hydride of 5°C.

In order for the cycling energy to be minimized, the mass of the heat exchanger and the mass of the water in it must be minimized with respect to the mass of the hydride. As illustrated in Figures 5 and 6 the hydride bed/heat exchanger is a vacuum brazed assemblage of 0.020-inch thick stamped aluminum sheets and open pore aluminum foam with entrained hydride. This method of construction is used for "compact heat exchangers" which are, in general, the least costly and lightest weight form of heat exchangers available.

The baseline system consists of a total of four hydride bed/heat exchanger modules - two filled with Lanthanum-Nickel hydride ($LaNi_5$) and two filled with Calcium-Nickel hydride ($CaNi_5$). Each module is vacuum brazed together with the hydrides already entrained in the aluminum foam and then the hydrogen is introduced later.

The temperature change of the water circulating through the beds is set at 20°F (11°C) for the high, intermediate and low temperature loops. At the design rate of heat transfer (about 10,000 Btu/Ft^2 Hour) the flow velocity of the water is 5-10 feet per second and the bed water path length is 10 feet. Each of the four modules is split into two sub-beds in which the water flow is separate and into four sub-beds in which the hydrogen manifolds are separate (Figure 6).

The four modules are connected together with hydrogen lines and valves and with water lines and valves. The flow during the four phases of operation is shown in Figure 7.

3.1.2 Value Design and Fluid Flows

3.1.2.1 Hydrogen

The valving for the hydrogen is shown in Figure 7. "C" means the valve is closed while "O" means the valve is open. The hydrogen valves must withstand an internal pressure of up to 10 atmospheres and must be about 1.5 inches in diameter in order to pass the required hydrogen mass flow without a high pressure drop. They must be relatively leak free.

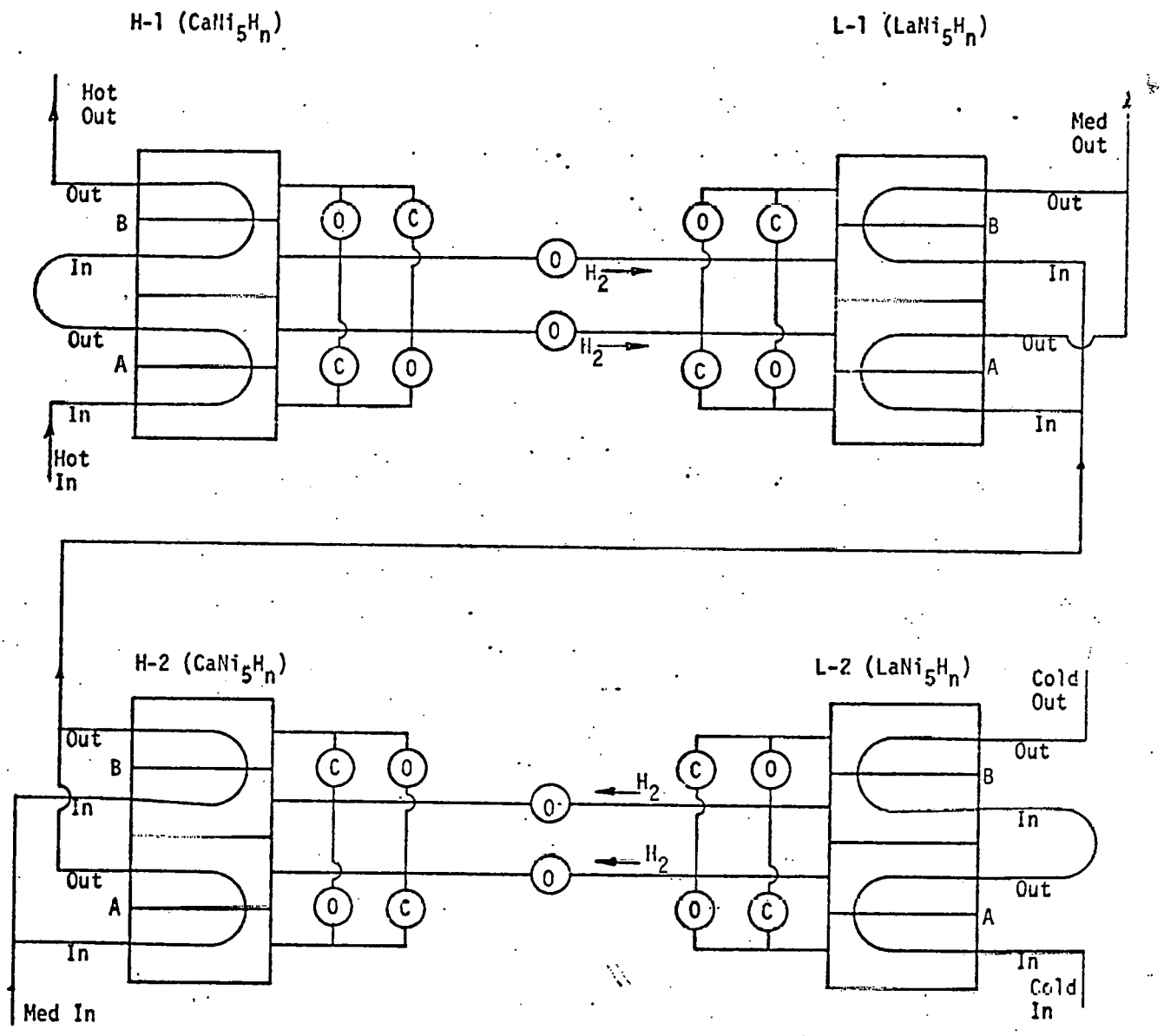

Figure 7a. Hydrogen, Water Flow During Cycle Step 1

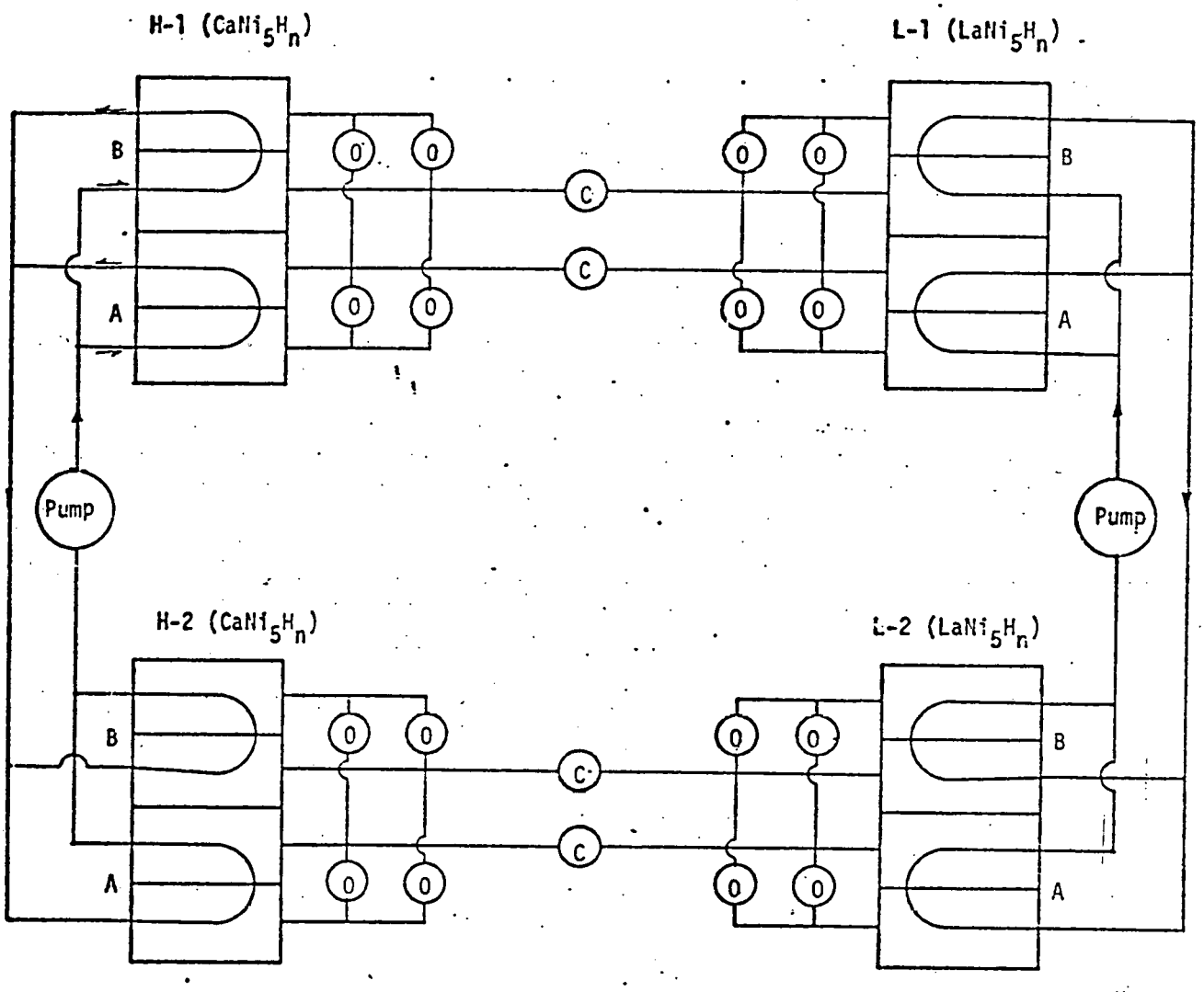

Figure 7b. Hydrogen, Water Flow During Regeneration Cycle Steps 2 and 4

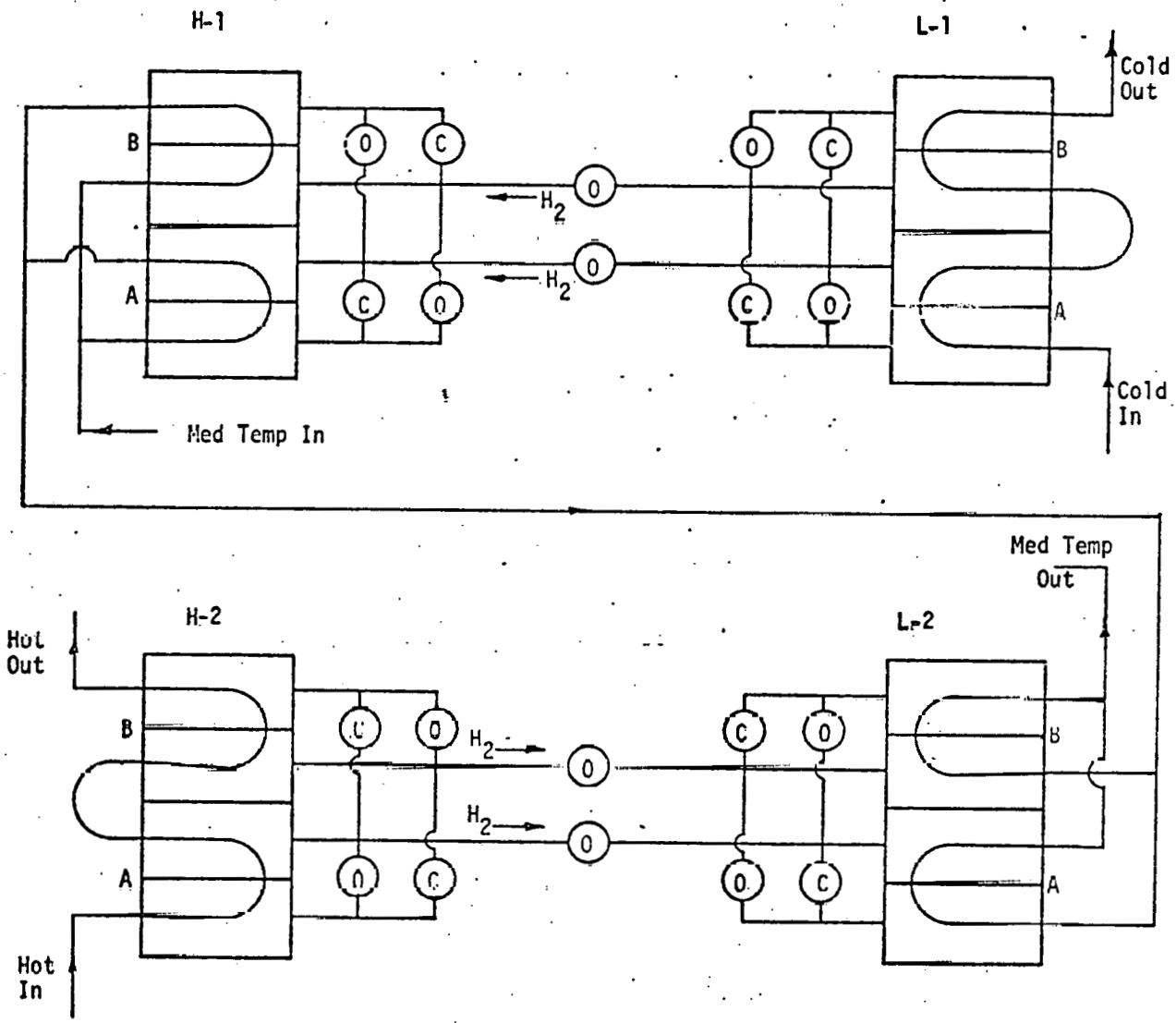

Figure 7c. Hydrogen, Water Flow During Cycle Step 3

3.1.2.2 Water

The water valving is rather elaborate and is shown in Figure 8. The valve is a three position sliding plug valve. The valve need not be excessively leak proof, as slight leakage would have little affect on the operation or safety of the system. The maximum pressure drop in the system is 5-17 pounds per square inch and the flow rate is 200-400 gallons per minute - comparable to absorption air conditioner flow rates and pressure drops. Figure 8 is not a definitive design but merely an existence proof of the possibility of relatively simple valve construction for the functions required. The positions 1, 2 and 3 of the plug are the operating stages of the system absorption-desorption, regeneration (heating and cooling of beds) and absorption-desorption in the other direction. The cycle is repetitive 1, 2, 3, 2, 1, 2, 3, 2, 1, 2, 3, where the valve is always in positions 1 and 3 for 60 seconds each and in position 2 for 20 seconds.

3.1.3 Pumps

The pumps required for the building hot and cold service loops and for the input energy loop (solar) were assumed to be supplied with the building. This is the normal practice with commercial building absorption air conditioners. These pumps will be sized to accommodate the specific building design and to interface with the hydride bed/heat exchanger modules.

Two pumps are required for the regeneration loops (Section 2.2 - Steps 2 and 4) within the hydride bed/heat exchanger modules.

These pumps must produce a flow rate of 400 gallons per minute. The pressure drop in the 10 foot heat exchanger path, computed using turbulent flow assumptions (Reference 9), is 5-16 pounds per square inch depending on the scale of the surface roughness inside the passages. This results in a maximum pumping power requirement for the regeneration loop of 1.5-5 horsepower per pump. This is comparable to the 5 horsepower pump which recycles the solutions in a commercial absorption air conditioner. The regeneration loop pumps are 3-inch by 3-inch centrifugal pumps running at 1750 rpm. They only run at full flow for 20 seconds out of every 80 seconds.

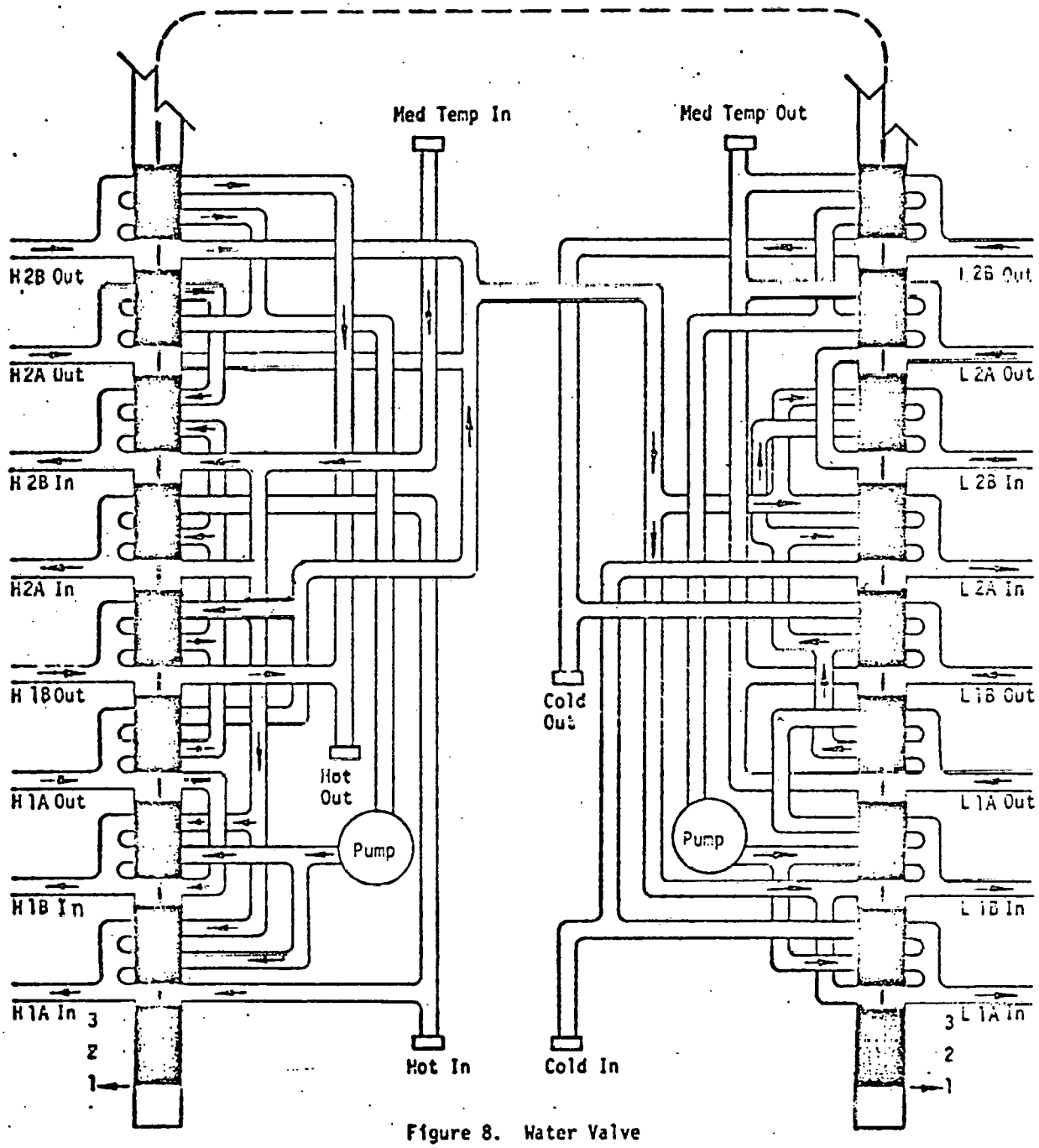

Figure 8. Water Valve

3.2 SYSTEM PERFORMANCE

3.2.1 Absorption/Desorption Cycle Heat Transfer

As noted previously, the heat flux into and out of the aluminum matrix-hydride is about 10,000 Btu/Ft^2 Hour due to the absorption-desorption process. The heat flux rate is maximum at the water surface interface in the heat exchanger. At the part of the hydride farthest (0.16 inches) from the liquid loop the flux rate is zero. The distribution of the hydride was assumed to be uniform so the average heat flux across the bed is 5000 Btu/Ft^2 Hour. The thermal conductivity of the aluminum matrix plus the hydride is 7.3 Btu/Ft°F Hour. This results in a temperature difference across the bed of 5°C during absorption and desorption.

The water flow through the heat exchangers is at an average velocity of 5-10 feet per second. The heat transfer film coefficient was computed using established turbulent flow methodology (Reference 8). The film coefficient was calculated at 3810 Btu/Ft^2°F Hour at 212°F and 1498 Btu/Ft^2°F Hour at 36°F. The film coefficient is limited by scaling which is worst at the highest temperatures. In general, however, aluminum is only effected slightly by scaling in comparison with other materials. Commercial practice heat transfer coefficients generally vary from 500-1000 Btu/Ft^2°F Hour. To accommodate the scaling which may occur, a film coefficient of 1111 Btu/Ft^2°F Hour was assumed.

The temperature distribution in the beds and their water passages during the absorption/desorption cycles are shown schematically in Figure 9. The maximum and minimum temperatures and the associated hydrogen pressures are illustrated. For hydrogen to completely saturate the beds and to be completely desorbed, the minimum hydrogen pressure in the desorbing bed must be equal to or greater than the maximum hydrogen pressure in the absorbing bed.

The need for higher hydrogen pressure on the desorbing bed has determined the design of the beds. The water paths were split in each bed in order to provide a series-parallel arrangement. The medium temperature heat rejection loop goes first through the absorbing $CaNi_5$ beds so they are at a relatively lower temperature (and hydrogen pressure) to receive the hydrogen from the desorbing $LaNi_5$ beds. The hydrogen flows are also split to take maximum advantage of the temperature gradients in the beds.

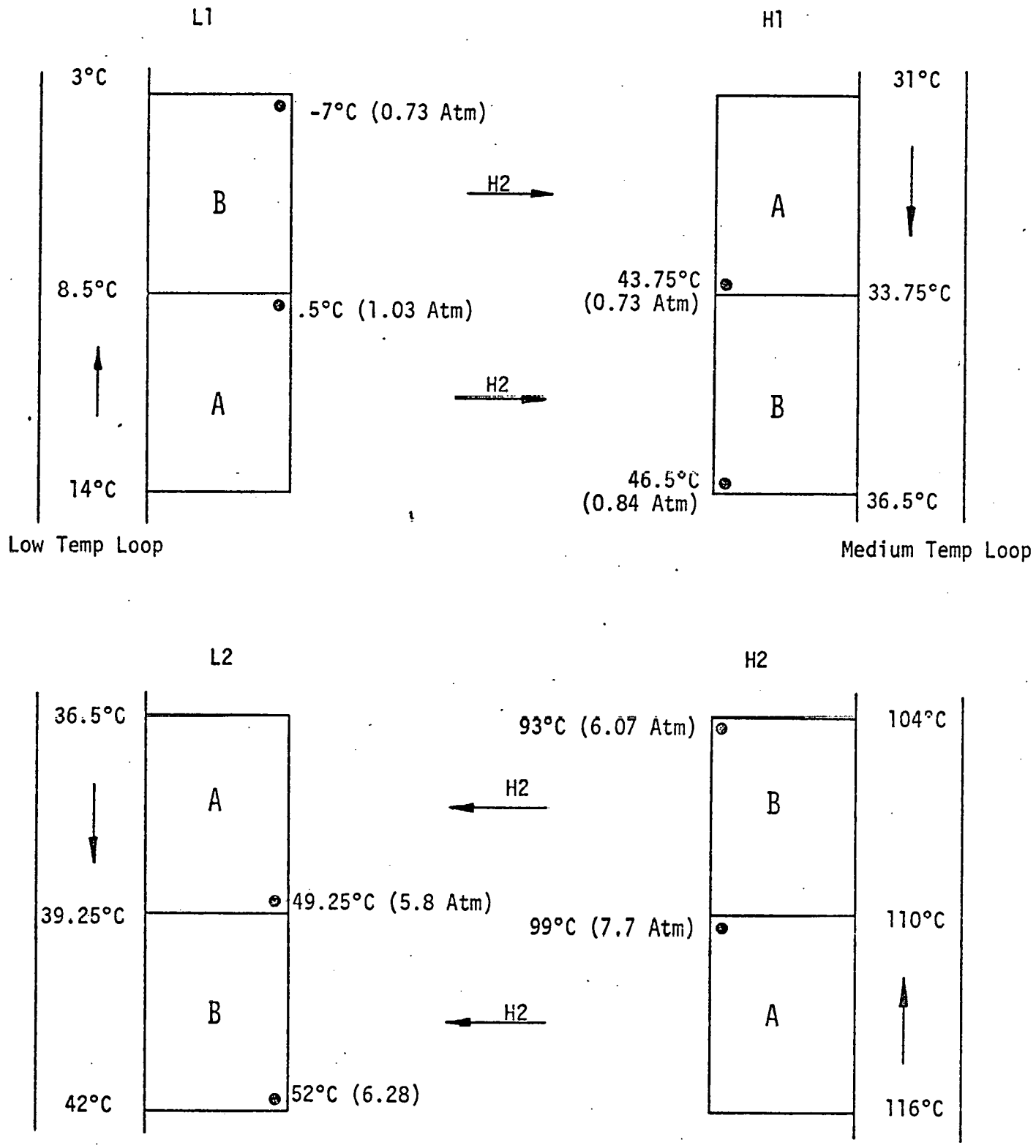

Figure 9. Schematic of Bed Temperatures and Hydrogen Pressures During Absorption/Desorption Cycles (Steps 1 and 3)

The temperature drops and rises across and along the beds all detract from the performance. The higher absorption temperatures and lower desorption temperatures drive the mean bed temperatures in order to allow complete hydrogen absorption. In step 3 the mean temperature is driven up in the low temperature loop which supplies building cooling, while the mean temperature of the high temperature bed in which absorption occurs is driven down. In step 1 the mean temperature of the highest temperature bed must be driven up in order to provide sufficient hydrogen pressure for the low temperature bed to absorb at the medium temperature.

The process of establishing the temperature of the beds is an iterative one. The bed temperatures noted in Figure 9 were established through this iterative process. However, due to the limits on time and effort it was not determined if the bed temperatures were optimized.

3.2.2 Regeneration

Regeneration is the term used to describe the process by which the beds are heated and cooled with no hydrogen flow so that the useful output of absorption heat and desorption cooling will be at the correct temperatures. (Section 2.2 - Steps 2 and 4).

Preliminary analysis showed that if the thermal energy used to heat and cool the beds were to come from the useful output flows, the net output of cooling would be zero. This is because the thermal mass of the heat exchangers and beds when cycled through the temperature extremes required would require more energy then there was available from the hydrogen desorption process.

The regeneration process therefore uses the thermal energy in the beds at different temperatures to reduce the useful energy needed to heat and cool the beds.

Table 2 shows the mean temperature of the beds and their associated water loops during the absorption/desorption cycle.

The analysis of the regeneration was done on a per square foot of bed heat transfer area basis. The thermal mass of the aluminum matrix - hydride-aluminum heat exchanger wall combination is 1.458 Btu/°C. The thermal mass of the water contained in the heat exchanger (plus 50 percent for interior plumbing) is 1.020 Btu/°C. The energy contained in the hydride is 167 Btu.

Table 2. Mean Temperatures During Absorption/Desorption Cycles (Steps 1 and 3)

Bed	Aluminum-Hydride Temperature (Mean)	Water Temperature (Mean)
H_1	104.5°C	110°C
H_2	41.25°C	33.75°C
L_1	2.5°C	8.5°C
L_2	46.75°C	39.25°C

The heat transfer coefficient between the liquid loop mean temperature and the bed mean temperature is 667 Btu/Ft^2 °C Hour.

During regeneration the fluid flow through bed H_1 is then pumped to bed H_2 and back through H_1. This flow continues until both bed H_1 and H_2 approach uniform temperature. The same is done with beds L_1 and L_2. The time constant for the bed heat transfer is 7.89 seconds. Within the regeneration time of 20 seconds the temperature of each bed will approach to within 8 percent of the original temperature difference between the bed starting and ultimate temperature to the mean bed temperature.

The mean temperature of the water in the loops of beds H_1 and H_2 at the start of regeneration is 72°C. The temperature of the beds H_1 and H_2 plus the water loops after a long time when all of the thermal energy has been shared is 72.6°C. The final temperature of bed H_1 is 72.6°C + 0.08 (104.5°C - 72.6°C) or 75.15°C. The final mean temperature for bed H_2 is 70.09°C. The mean temperatures of beds L_1 and L_2 are 22.44°C and 25.94°C, respectively. The final temperature of the water loop in beds H_1 and H_2 is 72.55°C; and in beds L_1 and L_2 it is 21.49°C.

3.2.3 System Coefficient of Performance

The final mean bed and water temperatures provide the key to the calculation of the system COP.

After regeneration, the energy required to bring the low temperature bed from its final regeneration mean temperature to the low temperature mean desorption temperature plus the energy to cool the water in that heat exchanger and its associated manifolds and piping to the cold loop mean temperature must all come from the desorption energy. This reduces the building cooling energy available. The energy necessary to cool the low temperature bed from 25.94°C to 2.5°C mean temperature is 34.18 Btu/Ft^2. The energy necessary to cool the water and its associated plumbing is 15.97 Btu/Ft^2. The energy available in the hydride desorption process is 167 Btu/Ft^2. For 1 ton of useful cooling 12, 000 Btu's per hour must be removed. At 116.85 Btu per cycle (167 - 34.18 - 15.97) for the system of four beds and 45 cycles per hour (60 seconds desorbing and absorbing and 20 seconds of regeneration) 2.283 Ft^2 per bed per ton are required. Each square foot of low temperature bed gets its hydrogen from and gives its hydrogen to one square foot of high temperature bed.

For each 167 Btu in hydrogen desorption energy required by the low temperature bed, 167 Btu must go to desorbing the high temperature bed. In addition to this, the total energy necessary to reheat the hot bed from 70.09°C to 104.5°C and the hot loop water in that bed from 72.6°C to 110°C is 88.3 Btu's. The total high temperature heat input required, therefore, is 255.3 Btu's.

The coefficient of performance (COP) of the hydride heat pump is the useful cold output, 116.85 Btu, divided by the high temperature heat input, 255.3 Btu. The resultant COP is 0.4577.

The high temperature heat input of 255.3 Btu is not all required to go through the hydride. Only 218 Btu's are transferred from the hot loop through the heat exchanger wall. The other 38 Btu's are due to the dilution of the high temperature input loop with cooler water. The resultant heat transfer rate is 13,000 Btu/Ft^2 Hour. The initial assumption of a 6°C film temperature drop was not large enough and the hot loop temperature should be 0.5°C higher. This delta represents a higher order iteration which will not significantly change the results.

4.0 HYDRIDE AIR CONDITIONER SIZE, WEIGHT AND COST ESTIMATES

As noted previously, the hydride air conditioning system consists of integral hydride bed/heat exchanger modules, water flow control valve, hydrogen flow control valves, the regeneration loop pumps and controls. Figure 10 presents a general layout of the baseline, 100-ton capacity system.

The following sections present size, weight and cost estimates for each of the major system components.

4.1 HYDRIDE BED/HEAT EXCHANGER MODULES

Each square foot of hydride bed contains 2.074 pounds of hydride. The 100 ton air conditioner has 228 square feet per bed or 464.2 pounds of hydride per bed. The weight of the aluminum in the foam matrix and in the manifolds for each bed is about 175 pounds per bed. The hydride bed/heat exchanger combination has 48 square feet of area per cubic foot of bed. Each bed would nominally be 5 feet long by 1.15 feet high by 4.8 inches wide. In the baseline design the bed is folded to a module size of 2.5 feet long by 1.15 foot high by 1 foot wide with all the manifolds brought out the front as shown in Figure 6. The bed has 2 fluid loops which are in series in the high and low temperature desorption mode and in parallel in the medium temperature absorption mode. The water flow rate through the beds of greater than 200 gallons per minute necessitates large diameters for the pipes into the beds and for the flow control valve.

The total weight of hydride in all four modules is 1856 pounds, of which half is $LaNi_5$ and half is $CaNi_5$. The cost of the $LaNi_5$ was taken as $7 per pound and the cost of the $CaNi_5$ was taken as $2.50 per pound (Reference 3). Therefore, the hydride cost is $8,820 for the 100-ton unit.

The cost of aluminum compact heat exchangers, including the aluminum foam is approximately $52 per cubic foot (References 6 and 7). Because of the increased complexity of the hydride bed/heat exchanger modules, their cost has been estimated at approximately $100 per cubic foot, exclusive of the hydride cost (Reference 7). Therefore, the total fabrication cost for the four modules was estimated at $1,900.

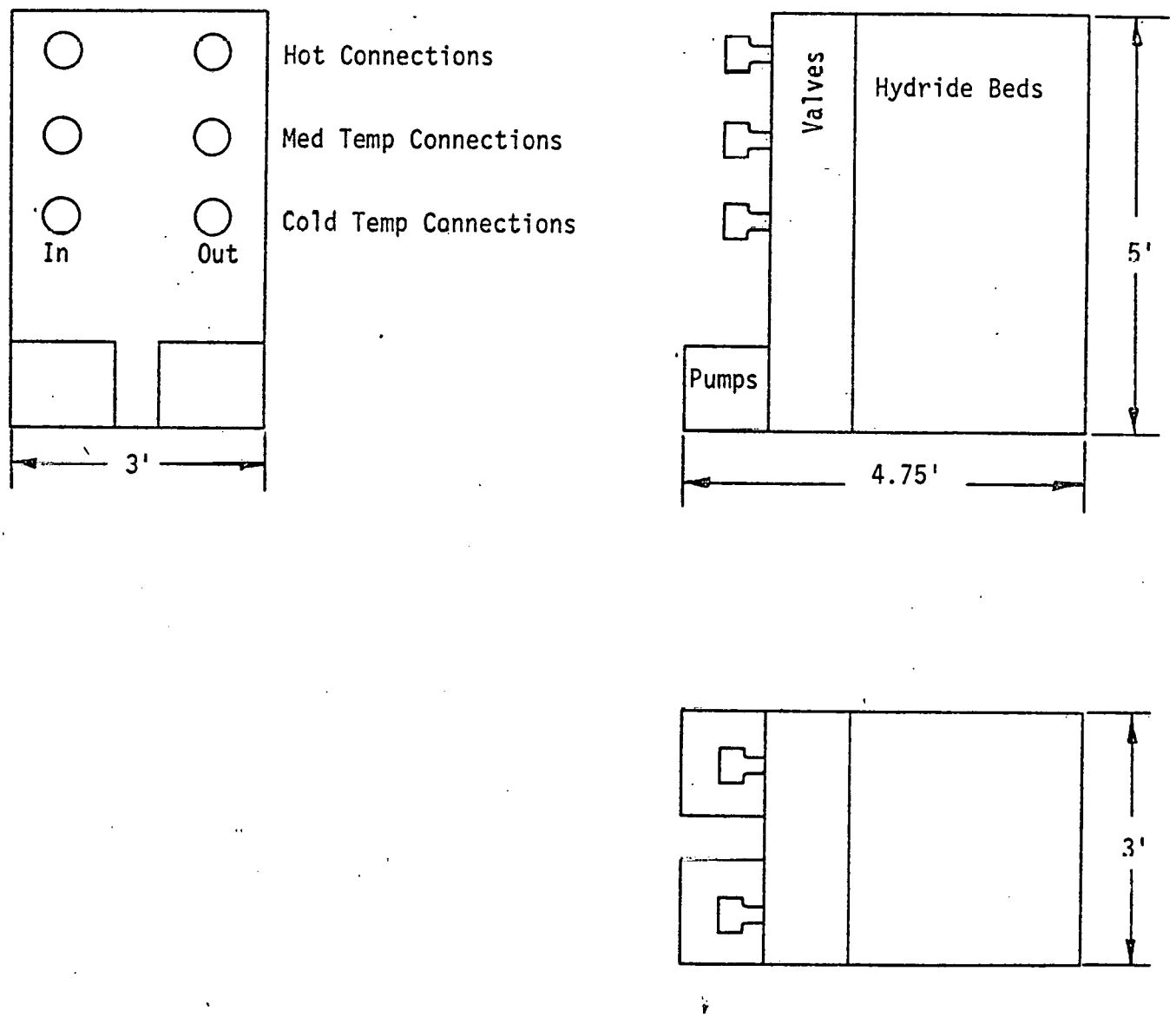

Figure 10. Overall Layout of Hydride Air Conditioner

4.2 FLOW CONTROL VALVES

4.2.1 Water Flow Control Valve

The water flow control valve is fairly complex (Figure 8), but its construction should be relatively simple and inexpensive due to the fact that the peak pressure is only 50 pounds per square inch. The movable plug has only 3 positions. The design shown is practicable, however other geometrical arrangements are possible. The valve is large because the flow path must be for a 2-1/2 inch diameter flow equivalent through each of the ports.

Since the valve must operate 90 times an hour, the plug must be loose fitting to prevent wear, and there will be some leakage. Due to the low pressures involved the leakage will be very small compared to the system flows and should have a relatively small effect on the system performance. The valve is estimated to weigh 300 pounds and to cost $2,000 including the piping manifold to the beds and pumps.

4.2.2 Hydrogen Flow Control Valves

The hydrogen flows are controlled by 20 open-shut valves. These valves must be 1.5 inches in diameter and must seal fairly well. They must also withstand 10 atmospheres of pressure. The 20 valves are estimated to cost $1,000 and to weight 100 pounds, with the piping manifold to the beds.

4.3 REGENERATION PUMPS

The regeneration pumps are simple centrifugal water pumps with electric motor drive. They pump 400 gallons per minute across a 5-17 pound per square inch pressure drop. The cost of the two pumps and their associated 5 horsepower motors is about $1,000. (Reference 10). They are estimated to weigh 300 pounds.

4.4 SYSTEM CONTROLS

The system controls required include the motor starters, temperature indicators, temperature controllers, flow indicators, and malfunction and performance indication instrumentation. The estimated total weight is 70 pounds, and the cost is estimated at $1,000.

4.5 BASELINE SYSTEM COST AND WEIGHT SUMMARY

The following tables summarize the cost and weight of the baseline 100-ton hydride air conditioning system.

Table 3. System Cost Summary

Hydride Bed/Heat Exchanger Modules	$10,720
H_2O Valve plus Manifold	2,000
H_2 Valves plus Manifolds	1,000
Regeneration Pumps	1,000
Controls	1,000
Assembly and Structure	$15,720
(at 10 percent)	1,572
Total	17,292

Table 4. System Weight Summary

Hydride Bed/Heat Exchanger Modules	2,600 lb
H_2O Valve plus Manifold	300
H_2 Valves plus Manifolds	100
Regeneration Pumps	300
Controls	70
Structure	330
Total	3,700 lb

5.0 HYDRIDE AIR CONDITIONER VERSUS CONVENTIONAL ABSORPTION AIR CONDITIONERS

Lithium Bromide (LiBr) absorption chillers are now commercially available in rated capacities of 100 tons up. Figure 11 presents a drawing of this type chiller with the dimensions shown for the 100-ton capacity unit (Reference 11). It should be noted that the absorption unit requires approximately 55 square feet of floor space compared to approximately 15 square feet for the hydride system. The LiBr unit weighs about 11,000 pounds compared to 3,700 pounds for the hydride system.

Table 5 compares the operating conditions and performance of the 100-ton capacity hydride air conditioning system to the same size Lithium Bromide absorption chiller (Reference 11).

Figure 12 shows the total price and marginal price of the conventional LiBr absorption systems as a function of capacity (Reference 11). As indicated by the figure, the price of a 100-ton absorption chiller is about $20,000 as compared to the $17,000 estimated cost of the hydride system.

Life cycle costing is most often advocated as the methodology to be used for comparing new or improved energy systems with conventional systems. In general, this method compares the new and conventional systems on the basis of the present value (based on a suitable discount or interest rate) of lifetime system costs. The costs generally include initial capital costs, financing costs, maintenance and overhead costs, energy costs and some scrap recovery value (if applicable).

The usual reason for using life cycle costing is that new or improved energy systems usually require less energy consumption which leads to energy cost savings which then allow some additional initial capital cost to be justified.

The results of this study indicate that the 100-ton hydride air conditioner does not fit into the above mold. The cost of the hydride system is somewhat less than the price of the commercially available absorption unit. However, the usual commercial mark-up will probably raise the price of the hydride unit to a level equal to or above that of the absorption unit. Even if an $800 allowance is permitted the hydride unit for occupying less

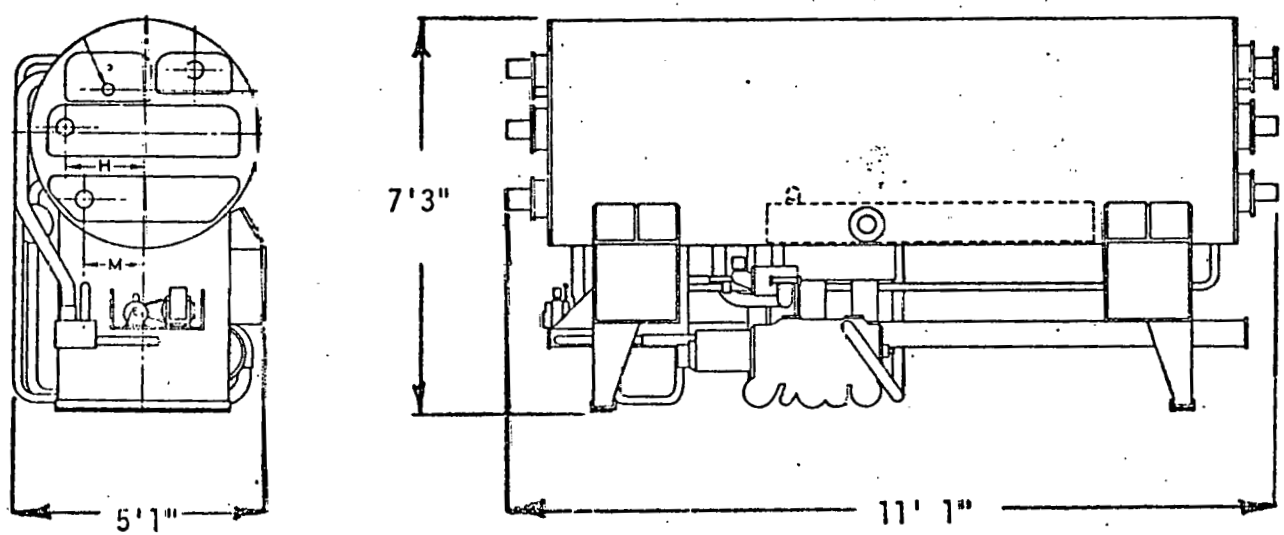

Figure 11. Conventional 100-Ton Absorption Air Conditioner

Table 5. Hydride Air Conditioner Operating Conditions and Performance Versus Conventional Absorption System (100-Ton Capacity)

	Hydride Air Conditioner	Single Stage LiBr Absorption Chiller (Reference 11)
Hot Temperature Water Input	241°F	270°F
Hot Temperature Water Output	219°F	230°F
Medium Temperature Water Input	88°F	85°F
Medium Temperature Water Output	107.6°F	96-106°F
Cold Temperature Water Output	37.4°F	44°F
Cold Temperature Water Input	57.2°F	53°F
COP	0.46	0.68

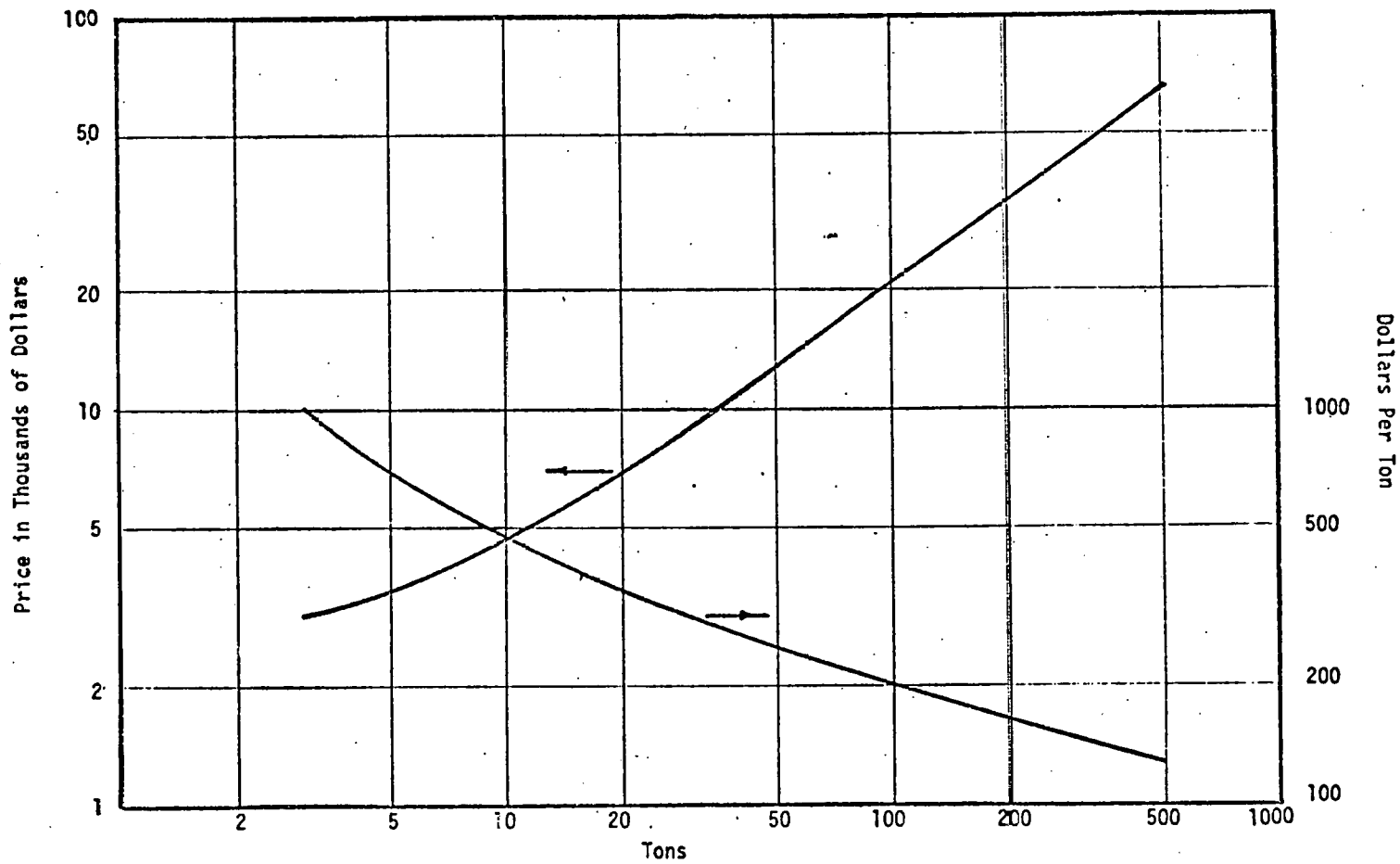

Figure 12. Absorption Chiller Prices

space (40 square feet at $20 per square foot) the costs of the competing units should be comparable. Also, as Table 5 indicates, the hydride unit COP is less than that of the absorption unit. Thus, the hydride system does not offer any energy savings to offset the initial capital cost. Applying the life cycle costing methodology, therefore, does not present any advantage to the hydride air conditioner.

6.0 PERFORMANCE IMPROVEMENT POTENTIAL AND NEEDS FOR FUTURE WORK

As shown in the previous sections, the 100-ton hydride air conditioner should be comparable in cost to commercially available absorption systems but is estimated to have a lower COP.

The main source of the hydride system performance degradation from the theoretical cooling COP of 1.0 is the mass of material (heat exchanger and water) which must be thermally cycled with the hydride. If lighter gauge aluminum, smaller water passage dimensions and a better heat transfer fluid other than water could be used in the hydride bed/heat exchanger modules then a better COP would result. The COP would increase to levels comparable with commercial absorption units if the density and energy content of the hydride could be doubled.

The higher performance of the commercial absorption units is due to the fact that the absorbing media - equivalent to the hydride - is a liquid. This liquid is pumped through the system, and there are no cycling losses in the heat exchangers. If a liquid form of hydride were developed which could be pumped through the heat exchangers, then a cooling COP close to 1.0 would result in large cost and energy savings compared to conventional absorption units.

Based on the above, the aluminum sheet/aluminum foam sandwich technique of hydride bed/heat exchanger construction should be investigated to determine if foam of higher unit conductivity and lighter gauge sheet material could be used under the conditions imposed by the hydride system. As a first step, a program to validate the construction and operation of the baseline hydride bed/heat exchanger module might be warranted.

As noted previously the large capacity hydride air conditioning system studied is only one of several possible implementations of the HYCSOS concept. Another possibility is to extract mechanical power from the hydrogen working fluid and to use that power to generate electricity during periods of low demand for air conditioning . This implementation alternative was not investigated in the current study because of the limited time and resources available. For completeness, however, this system capability should be investigated.

Due to the study ground rules, a smaller sized hydride air conditioning system suitable for residential applications was not studied. The hydride beds - the major component cost - should linearly scale to the smaller size, while the economics of the hydride system with freon evaporative/condensing heat transfer may be more favorable than the conventional absorption systems. In addition, the cyclic nature of residential operation should cause the small absorption unit COP to decrease due to the thermal mass of the heat exchanger and other normally isothermal parts. Because the hydride system normally cycles forty-five times per hour, its COP should be relatively less effected by cyclic residential operation. These factors may favorably change the cost/performance comparisons between the hydride and absorption systems. It would appear, therefore, that this implementation should be studied in some detail.

REFERENCES

1. "HYCSOS: A Solar Heating, Cooling, and Energy Conversion System Based on Metal Hydrides", by D. M. Gruen, R. L. McBeth, M. Mendelsohn, J. M. Nixon, F. Schreiner and I. Sheft. Chemistry Division, Argonne National Laboratory, Argonne Illinois. Paper at 1976 IECEC, September 1976, Lake Taho, Nevada.

2. "Hydrogen Storage by Binary and Ternary Intermetallics for Energy Application - A Review", by H. W. Newkirk, UCRL - 52110, August 2, 1976, Lawrence Livermore Laboratory.

3. Conversations with D. M. Gruen at ANL, March 7, 8, 1977.

4. "Absorption-Desorption Compressor for Spareborne/Airborne Cyrogenic Refrigerators", by Daniel Lehrfeld and Otmar Boser, AFFDL-TR-74-21, March, 1974.

5. Letter from Joseph G. Cannon, Manager Modern Metals Metallurgical Division, Moly Corp. to D. M. Gruen, ANL, dated October 4, 1976.

6. "Duocel - A New Basic Design Material", Manufacturer's literature from Energy Research and Generation, Inc., Oakland, California.

7. Telecon R. Gorman to Dr. Glendon Benson of Energy Research and Generation, Inc., March 24, 1977 and Letter from Dr. Glendon Benson to R. Gorman, March 28, 1977. Energy Research and Generation, Inc.

8. Standard Handbook for Mechanical Engineers, Baumeister & Marks "Transmission of Heat by Conduction and Convection" equation 6c.

9. IBID "Mechanics of Fluids"

10. W. W. Grainger Inc. Catalog

11. "Absorption Cold Generator 101-1660 Tons", Technical Specification DS-ABS 1 Trane Air Conditioning.