435
6/7/84
MJR

DR# 0108-2

DOE/MC/19299-1564
(DE84007356)

DEVELOPMENT OF A PILOT-SCALE KINETIC EXTRUDER FEEDER SYSTEM AND TEST PROGRAM

Phase II: Verification Testing. Final Report

January 12, 1984

Work Performed Under Contract No. AC21-82MC19299

Lockheed Missiles & Space Company, Inc.
Lockheed Energy Systems
Sunnyvale, California

Technical Information Center
Office of Scientific and Technical Information
United States Department of Energy

DISCLAIMER

This report was prepared as an account of work sponsored by an agency of the United States Government. Neither the United States Government nor any agency Thereof, nor any of their employees, makes any warranty, express or implied, or assumes any legal liability or responsibility for the accuracy, completeness, or usefulness of any information, apparatus, product, or process disclosed, or represents that its use would not infringe privately owned rights. Reference herein to any specific commercial product, process, or service by trade name, trademark, manufacturer, or otherwise does not necessarily constitute or imply its endorsement, recommendation, or favoring by the United States Government or any agency thereof. The views and opinions of authors expressed herein do not necessarily state or reflect those of the United States Government or any agency thereof.

DISCLAIMER

Portions of this document may be illegible in electronic image products. Images are produced from the best available original document.

DISCLAIMER

This report was prepared as an account of work sponsored by an agency of the United States Government. Neither the United States Government nor any agency thereof, nor any of their employees, makes any warranty, express or implied, or assumes any legal liability or responsibility for the accuracy, completeness, or usefulness of any information, apparatus, product, or process disclosed, or represents that its use would not infringe privately owned rights. Reference herein to any specific commercial product, process, or service by trade name, trademark, manufacturer, or otherwise does not necessarily constitute or imply its endorsement, recommendation, or favoring by the United States Government or any agency thereof. The views and opinions of authors expressed herein do not necessarily state or reflect those of the United States Government or any agency thereof.

This report has been reproduced directly from the best available copy.

Available from the National Technical Information Service, U. S. Department of Commerce, Springfield, Virginia 22161.

Price: Printed Copy A09
Microfiche A01

Codes are used for pricing all publications. The code is determined by the number of pages in the publication. Information pertaining to the pricing codes can be found in the current issues of the following publications, which are generally available in most libraries: *Energy Research Abstracts (ERA), Government Reports Announcements* and Index (*GRA* and I); *Scientific and Technical Abstract Reports (STAR);* and publication NTIS-PR-360 available from NTIS at the above address.

DOE/MC/19299-1564
(DE84007356)
Distribution Category UC-90b

DEVELOPMENT OF A PILOT-SCALE KINETIC EXTRUDER FEEDER SYSTEM AND TEST PROGRAM

PHASE II Verification Testing

Final Report

12 January 1984

Prepared for

United States Department of Energy

Under Contract No. DE-AC21-82MC19299

LOCKHEED ENERGY SYSTEM

Sunnyvale, California 94086

THIS PAGE

WAS INTENTIONALLY

LEFT BLANK

ABSTRACT

This report describes the work done under Phase II, the verification testing of the Kinetic Extruder. The main objective of the test program was to determine failure modes and wear rates. Only minor auxiliary equipment malfunctions were encountered. Wear rates indicate useful life expectancy of from 1 to 5 years for wear-exposed components.

Recommendations are made for adapting the equipment for pilot plant and commercial applications.

CONTENTS

Section		Page
	ABSTRACT	iii
	ILLUSTRATIONS	v
	TABLES	vi
	CONCLUSIONS AND RECOMMENDATIONS	vii
1	OBJECTIVE AND SCOPE OF WORK	1-1
2	DESCRIPTION OF THE KINETIC EXTRUDER DRY COAL PUMP	2-1
3	SUMMARY OF PROGRESS	3-1
4	DETAILED DESCRIPTION OF TECHNICAL PROGRESS	4-1
	4.1 Bearing and Seal Modification	4-1
	4.2 Procurement and Installation of Wear-Resistant Parts	4-3
	4.3 Test Loop Modification	4-4
	4.4 Test Supplies	4-8
	4.5 Testing	4-8
	4.5.1 Test Configuration	4-8
	4.5.2 Test Conditions	4-10
	4.5.3 Performance Data Correlation and Prediction	4-20
	4.5.4 Wear and Expected Life of Parts	4-21
	4.5.5 Bearing and Lubricant Selection	4-31
	4.5.6 Attrition of Feedstock	4-33
	4.5.7 Control Gas Consumption	4-35
	4.5.8 Transient Response	4-35
	4.5.9 Special Testing	4-38
	4.5.10 Equipment Malfunction	4-49
5	TECHNICAL EVALUATION OF FEEDER	5-1
6	SPARE PARTS LIST	6-1
7	REFERENCES	7-1
Appendix		
A	DETAILS OF THE KINETIC EXTRUDER NO. 6	A-1
B	ASSEMBLY AND DISASSEMBLY PROCEDURES FOR MODEL 6 KINETIC EXTRUDER	B-1
C	DESIGN SPECIFICATIONS AND OPERATING INSTRUCTIONS FOR MODEL NO. 6 KINETIC EXTRUDER	C-1

ILLUSTRATIONS

Figure		Page
2-1	Kinetic Extruder	2-2
4-1	Assembly of the Kinetic Extruder Model No. 6	4-2
4-2	Rotor Assembly	4-5
4-3	Schematic of Seal Buffer Gas System	4-6
4-4	Control Gas System Schematic	4-7
4-5	KE Model No. 6 Performance Test Points	4-11
4-6	Predicted Performance According to Eq. (1) Coal Flow Rate Versus Control Gas Pressure Differential Setting	4-22
4-7	Test Data, 100 psig, 2700 rpm	4-23
4-8	Test Data, 200 psig, 2850 rpm	4-24
4-9	Test Data, 250 psig, 3250 rpm	4-25
4-10	Test Data, 300 psig, 3300 rpm	4-26
4-11	Test Data, 340 psig, 3600 rpm	4-27
4-12	Control Gas Flow Rate Data	4-36
4-13	System Response to Step Charges in Control Gas Differential Pressure	4-37
4-14	L-Valve Configuration Tested	4-39
4-15	L-Valve Response to Control Pressure Differential Setting	4-40
4-16	L-Valve Control Gas Flow Data	4-41
4-17	Kinetic Extruder "Pump" Test Setup	4-43
4-18	Funnel for Low Area Ratio (8) and Sprue Channel	4-46
4-19	Location of Scoring Marks	4-48

TABLES

Table		Page
2-1	Reports and References Pertaining to the Kinetic Extruder	2-3
4-1	Wear-Resistant Sprue Parts	4-3
4-2	Parts List for Control Gas System	4-7
4-3	Screen Analysis of Test Coal	4-8
4-4	Chemical Analysis of Test Coal	4-9
4-5	Initial Installation of Sprue Parts in the Rotor	4-9
4-6	Standard Test Conditions	4-10
4-7	Summary of Selected Test Data	4-12
4-8	Installation of Sprue Parts in the Rotor	4-28
4-9	Wear Summary	4-28
4-10	Estimated Life Expectancy of Sprue Parts	4-29
4-11	Screen Analysis Results	4-34

CONCLUSIONS AND RECOMMENDATIONS

Based on the results of the verification testing we derive the following conclusions:

- The Kinetic Extruder is a simple and reliable machine.
- The Kinetic Extruder can accurately meter and pressurize dry pulverized coal continuously without changing particle size or compacting the coal.
- Low wear of sprue parts has been confirmed. Eight thousand hours between maintenance will be achieved with proven components.
- The Crane Packing Company gas seals perform extraordinarily well. They exhibit low torque, have leakage rates below 0.8 cfm per seal surface, and can readily be scaled to commercial size.
- The fluidic turn down control, using no moving parts exposed to coal dust, performs reliably, is highly predictable, and has fast response.
- The subsystems perform well reaffirming the fact that no special requirements are imposed on them by the Kinetic Extruder.
- No safety problems have been identified.
- The Model No. 6 Kinetic Extruder should not be operated when bearing temperatures exceed 200°F.
- Design changes should be implemented to lift the 200°F temperature restriction (see Section 5).
- Experimental work needs to be carried out to integrate the feeder into a reactor feed system. Two methods have been identified - the low density, 8 lb/ft^3, injection mode and a high density 35 lb/ft^3 mode. Design parameters need to be established and operational limits need to be determined for these systems.
- Design details need to be established for commercial equipment design to last 25 - 30 yrs. The design principles have been identified.

Section 1
OBJECTIVE AND SCOPE OF WORK

The basic objective of the coal feeder program is to supply architects, process designers, and engineers with high-pressure coal feeders having predictable performance, durability, economy, and safety for all coal-conversion processes.

This contract is the continuation of a contract for the design, development, and testing of a centrifugal, high-pressure, dry-coal feeder by Lockheed. To date, Lockheed has completed proof-of-concept testing in which optimum operating parameters and limitations for the feeder and test facility were defined.

The objective of the current effort is to perform short-term verification testing for reliability and safety and to determine failure modes and wear rates. The intent is to demonstrate feeder readiness for long-term verification testing, either in a pilot plant or on a test loop. These test results shall also become the basis for demo-/commercial-scale designs.

Particular objectives of verification testing are (1) to demonstrate reliable and sustained feeder performance consistent with the operational parameters of a selected process, and (2) to determine the feeder's capabilities and limitations so that only minimum effort will be required to prepare the feeder for integration into the targeted pilot plant. Verification testing will be conducted over a minimum of 200 hours of noncontinuous tests.

To accomplish the objectives, six tasks were performed.

Task 1 - Gas Seals and Bearing Modification

The previously used Model No. 5 configuration of the Kinetic Extruder was modified to accept the advanced technology Crane gas seals. These seals had been selected for commercial machines because they are the only design which can be scaled to the sizes required by these larger size machines. They also simplify and lower the cost of the Kinetic Extruder by eliminating the seal liquid pumping subsystems. New shafts had to be fabricated to retrofit the gas seals and bearings to the existing rotor and housing.

Task 2 - Procurement and Installation of Wear-Resistant Parts

Wear-resistant parts were procured and installed for the sprue passages as follows:

- Entrance funnels
- Sprue bodies
- Control nozzles

Minor redesigns of the rotor, sprue bodies, control nozzles, and nozzle block were made in the light of experience with the unit during Phase-I testing. The control nozzle is subject to the most severe environment and, because of the rather simple geometry, lends itself for material evaluation. It is for this reason that the most promising candidates are being tested in this location.

Task 3 - Test Loop Modification

Minor test loop modifications were required to operate the new extruder configuration and to correct shortcomings in the test loop. The gas seals required a gas buffer system. This replaced the liquid seal systems previously in use. The mechanical pressure regulators used to control the control gas differential pressure had proven inadequate. The system had limited our operating pressure to 300 psi and the differential pressure to

30 psi. Response had been slow. A new closed-loop servo controller was installed.

Coal loading into the test loop was cumbersome. Because the rate was limited by the 18-in. scalping screen, a larger 24-in. screen has been installed.

Additional minor changes in piping and instrumentation have been made in order to facilitate long-duration running of the equipment.

Task 4 - Procure Test Supplies

Provisions was made for an adequate supply of pulverized coal and nitrogen gas supply.

Task 5 - Test Plan and Testing

A detailed test plan was submitted for approval prior to initiating any tests.

The Kinetic Extruder was to be operated for a total of 200 hours of noncontinuous testing obtained during 4 months of calendar time. The main emphasis was on demonstrating reliability and durability of the equipment in sustained operation. Information on wear of key parts (e.g., sprues and control orifices) was expected to be the most valuable data generated in these tests. Most of the testing was to take place at relatively low delivery pressure because of letdown system limitations and lower rates of gas usage. However, periodically the delivery pressure was to be raised to the maximum of 400 psi for short bursts to verify the performance of the Kinetic Extruder.

The following effort was included in the testing task:

1. Lockheed will measure and record such items as wear, leakage, or any other decrease of life or reliability resulting from the test program.
2. At the conclusion of verification testing, Lockheed will dismantle the machine and remeasure and/or weigh all critical parts. The wear results will be recorded and reported to the Technical Project

Officer. The feeder will be reassembled with existing components. Lockheed will furnish a recommended list of spare parts, including sources for these spare parts. The coal feeder and ancillary equipment will be prepared under a Government bill of lading for shipment and be shipped to a location specified by the Contracting Officer.

3. Lockheed will conduct a minimum of four screen analyses during the 200 hours in no less than 50-hour increments. If the coal is recycled, this fact shall be recorded.
4. Lockheed will monitor and document all instrument-gathered test data used in operating and controlling the feeder and all derived performance data. Any changes to this procedure shall be documented in the monthly technical progress reports. At the completion of verification testing, Lockeed will compile and analyze the test data and report it in the final report.
5. Lockheed will record and report all failures, including their causes and solutions during verification testing.

Task 6 - Test Data Documentation, Failure Analysis, and Reporting

Wear data and instrumented test data used in operating and controlling the feeder, as well as all derived performance data will be carefully monitored and documented. A log of all failures, basis for the failures, and fixes will be maintained during the verification testing. After completion of the verification tests, Lockheed will compile or collate the wear data, operating data, and failure logs and analysis into a delivery failure and wear analysis for the feeder.

Monthly and quarterly reports and a final report encompassing all of the deliverable documentation will be prepared under this task.

The Final Report will be comprised of (1) a complete technical evaluation of the feeder, including its materials of construction, and (2) recommendations for modifications, including their costs, that will make the feeder reliable,

safe, and ready for integration into the targeted pilot plant. Lockheed will also furnish an operating manual with instructions for maintenance and operation based upon test results or improvements.

A complete, detailed design of the final version of the coal feeder and all ancillary equipment will be given. This will include design modifications implemented during the current effort.

Section 2
DESCRIPTION OF THE KINETIC EXTRUDER DRY COAL PUMP

The Kinetic Extruder takes dry pulverized coal from an atmospheric hopper, carries it across a gas pressure barrier, and delivers it into a high-pressure environment. The transfer of coal from atmospheric pressure to the high pressure of the reactor injection system, which may range from 150 to 1,500 psia or more, is accomplished in the rotor of a high speed machine called the Kinetic Extruder.

Referring to Fig. 2-1, pulverized coal is fluidized and fed through the stationary coal feed tube to the center of the rotor. When the pulverized coal enters the spinning rotor, centrifugal force causes it to flow into the sprue channels and to form a compacted, moving, porous plug in each of the sprues. The moving plug forms the pressure seal. Excess gases are removed from the rotor through vent channels in the walls of the feed tube by means of a small suction system. The pressure in the center of the rotor is kept slightly subatmospheric.

The coal flowrate through the sprues is stabilized and controlled by control nozzles, located at the outlets of each sprue. The discharge rate of the control nozzle can be changed by controlling the pressure gradient across the control nozzle. This is accomplished by injecting control gas into the control nozzles from an independent outside supply. This control gas is introduced into the rotor via a set of shaft seals and then into the separate nozzles through distribution channels in the rotor. A conventional differential pressure controller is used to adjust and vary the control gas pressure differential with respect to the pressure external to the rotor, thereby "throttling" the coal flowrate. A throttling range of 3 to 1 has been demonstrated with a 30-psi nozzle pressure differential. The coal is ejected from the rotor into the pressurized casing.

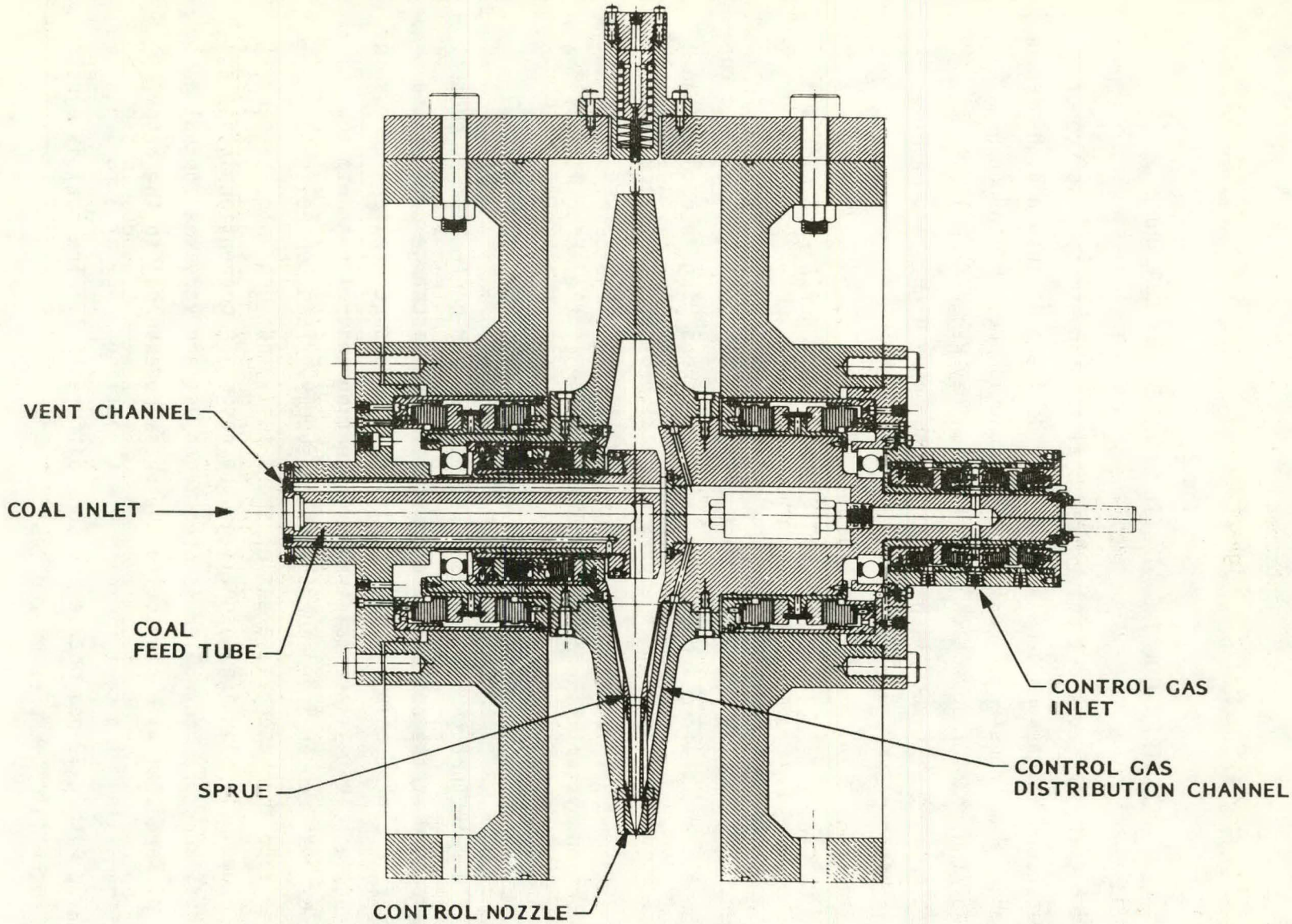

Fig. 2-1 Kinetic Extruder

The pressure in the casing is maintained by injecting syngas or nitrogen into the casing to compensate for the high-pressure gas carried with the coal from the casing.

The coal is not highly stressed or physically changed in passing through the rotor. No agglomeration or significant change in the particle size distribution takes place.

The development work carried out by Lockheed on the Kinetic Extruder has been extensively documented and reported as indicated in Table 2-1.

Table 2-1

REPORTS AND REFERENCES PERTAINING TO THE KINETIC EXTRUDER

1. Coal Feeder Development Program, Phase I Report, FE-1792-8, Dec 1975
2. Coal Feeder Development Program, Phase II Report, FE-1792-34, Jul 1977
3. Coal Feeder Development Program, Phase III Report, FE-1792-61, Sep 1979
4. J. W. Meyer, "A Channel Flow Analysis for Porous Beds Moving Under High g Forces," AICHE Journal, Vol. 26, No. 3, May 1980, pp. 363-371
5. J. H. Bonin, A. D. Daniel, Jr., and J. W. Mayer, "The Development and Experimental Evaluation of the Kinetic Extruder - A Novel Coal Feeder," American Institute of Chemical Engineers "CPE III - Anaheim Meeting," Jun 1982
6. J. H. Bonin, A. D. Daniel, Jr., and J. W. Meyer, "Instrumentation and Controls for the Kinetic Extruder - A Novel Pulverized Solids Feeder," Instrumentation in the Mining and Metallurgy Industries, Vol. 9, Instrument Society of America, 1982
7. Development of a Pilot-Scale Kinetic Extruder Feeder System and Test Program - Phase I Report, DOE Report No. DE8200954, Mar 1982
8. J. W. Meyer, System for Throttling and Compensation for Variable Feedstock Properties, U.S. Patent 4,265,580, 5 May 1981
9. J. W. Meyer, A. D. Daniel, Jr., and J. H. Bonin, Means and Apparatus for Throttling a Dry Pulverized Solid Material Pump, U.S. Patent 4,362,441, 7 Dec 1982
10. J. W. Meyer, A. D. Daniel, Jr., and J. H. Bonin, The Kinetic Extruder, A Dry Pulverized Solid Material Pump, U.S. Patent 4,376,608, 15 Mar 1983
11. J. H. Bonin, J. W. Meyer and A. D. Daniel, Jr., Coal Pump, U.S. Patent 4, 422,809, 27 Dec 1983

Section 3
SUMMARY OF PROGRESS

Under this program, the Model No. 6 Kinetic Extruder was designed, built, and operated. This machine was derived from Model 5. The rotor and the housing were taken from the Model 5 machine. Crane Packing Company gas seals were adapted for the Kinetic Extruder, and new shafts, bearings, and end plates were procured. The rotor was fitted with new sprue parts made mostly from wear-resisting parts.

The test-loop was upgraded by installing selected new equipment to overcome shortcomings identified during earlier programs.

Endurance testing was performed. The machine was operated for 335 hours. During 265 hours, coal was pumped at pressure to 400 psi and rates up to 2-1/4 tph.

Wear rates were determined after 217 hours of coal pumping. These data indicate that control nozzles will have a useful life of 1 year (8000 hours), sprue bodies 2 years, and funnels 6 years.

The bearings should have a useful life of 8000 hours or more.

The Crane Packing Company gas seals performed exceptionally well. The tests confirmed the very low leakage rate and low torque requirement. Wear should be practically nonexistent.

The test program was very successful, and confirmed that the Kinetic Extruder is a simple and reliable machine, which can continuously meter and deliver dry pulverized coal to a pressurized environment without changing particle size or compacting the coal.

Section 4
DETAILED DESCRIPTION OF TECHNICAL PROGRESS

4.1 BEARING AND SEAL MODIFICATION

During the prior DOE-sponsored program, (Ref. 1) the Model No. 5 Kinetic Extruder was built and operated. This feeder incorporated water-buffered seals. The shaft and feed tube inboard seals, facing the high-pressure side, were mechanical face seals while the outboard seals were floating-bushing labyrinth seals. The control-gas shaft seals were also of the floating-bushing type.

The Crane Packing Co. has developed a novel type of seal which is gas buffered and noncontacting during operation. This seal reduces friction and can be scaled to larger sizes required for commercial equipment. Under the current program the Kinetic Extruder was retrofitted with these novel gas seals before the test program began. The physical arrangement is shown in Fig. 4-1. This figure defines the Model No. 6 Kinetic Extruder. As shown in Fig. 4-1, the Model No. 6 Kinetic Extruder uses two grease-packed roller bearings and four sealing cartridges. Seals No. 1 and 2 are installed between the stationary housing and the rotor shafts. Seal No. 3 is installed between the stationary feed tube and the inner diameter of the rotor shaft, and Seal No. 4 the control gas seal, is installed on the shaft. A comprehensive drawing package for the Model No. 6 Kinetic Extruder is presented in Appendix A. The rotor, the feed tube and the housing are taken from the Model No. 5 Extruder. The shafts, bearings, and required adapters, etc., had to be fabricated.

The assembly procedure for the Model No. 6 Kinetic Extruder is shown in Appendix B.

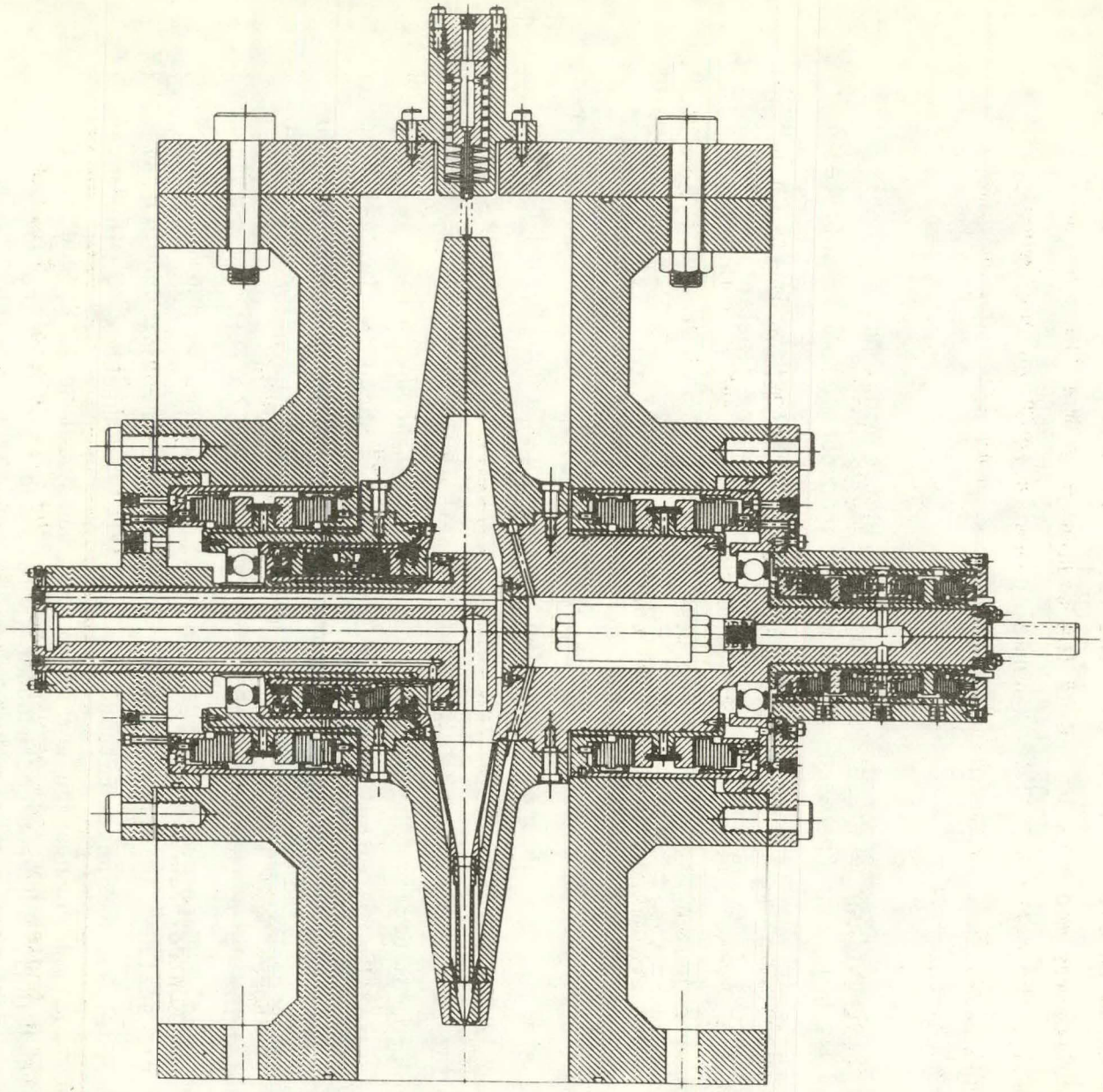

Fig. 4-1 Assembly of the Kinetic Extruder Model No. 6

Initial testing indicated that the drive-side bearing was running hot. This was traced to an overly tight fit. The feeder was partially disassembled and the endplate was modified to reduce the tightness of the fit. After reassembly, the bearing performed normally and calibration runs were performed at speeds up to 3600 rpm and housing pressures to 400 psi. No abnormal behavior was observed.

4.2 PROCUREMENT AND INSTALLATION OF WEAR-RESISTANT PARTS

The wear-resistant parts procured and initially installed in the Model No. 6 machine are shown in Table 4-1. Based on experience, the aluminum alloy funnels were judged adequate for the test program. The alloy 711 and alloy 12 funnels were evaluated for commercial use.

Table 4-1
WEAR-RESISTANT SPRUE PARTS

	Install		Procure
Funnels	2	Alloy 711	2
	2	Alloy 12	2
	8	Aluminum Alloy	8
Sprue Body	4	Titanium Carbide	4
	8	Steel	12
Control Nozzle	4	Tungsten Carbide	12
	4	Silicon Carbide	4
	4	Titanium Carbide	4

Steel sprue bodies were judged adequate for the test program. Titanium carbide sprues were evaluated for commercial use..

For the control nozzles, three carbide materials were to be compared. In the past, difficulties have been experienced in obtaining usable parts made from new or experimental type materials. Therefore, the schedule was protected by providing a fallback position. If necessary, 12 steel bodies and 12 tungsten carbide nozzles would be available. There should be no difficulty in

obtaining good parts using these materials. Figure 4-2 shows the sprue parts installed in the rotor. Improvements have been made in the sprue-control nozzle interface. The aluminum control-nozzle blocks used in the Model No. 5 rotor have been replaced with steel nozzle blocks, and the nozzle block bolts were enlarged to 1/2-in. size to support the heavier parts being installed in the rotor.

4.3 TEST LOOP MODIFICATION

Minor test loop modifications were required to operate the new extruder configuration and to correct shortcomings in the present test loop. The gas seals required a gas buffer system. This replaced the liquid seal systems in use.

The seal buffer gas system provides a clean N_2 buffer gas flow to the OD of the Crane gas seals. The system is designed to maintain a constant seal pressure of 475 psig which is 35 psi above the maximum control gas pressure and 75 psi above the maximum process (dirty gas) pressure. Total gas consumption of all four seals is about 8 scfm.

A schematic of the seal buffer gas system is presented in Fig. 4-3. The parts list for the system components is given in Appendix C.

The mechanical pressure regulators which had been used to control the control gas differential pressure had proven inadequate. They had limited our operating pressure to 300 psi and the differential pressure to 30 psi. Response has been slow. A new closed-loop servo controller was installed.

Components for the control gas system is shown in Fig. 4-4 and listed in Table 4-2. This system is designed to produce a control gas pressure differential of from -40 to +40 psi at the shaft. This allows a wider range of throttling of the KE coal throughput rate.

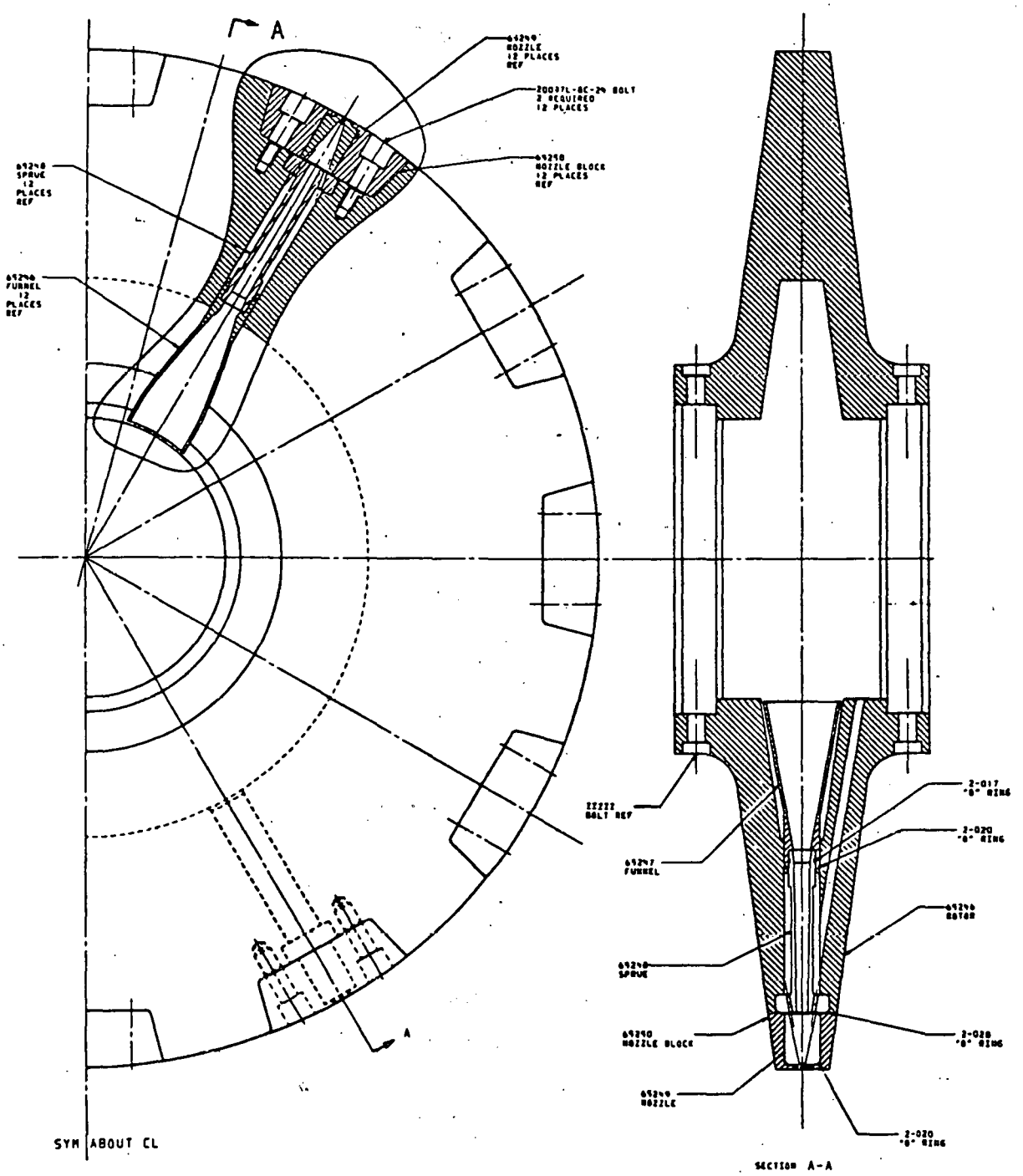

Fig. 4-2 Rotor Assembly

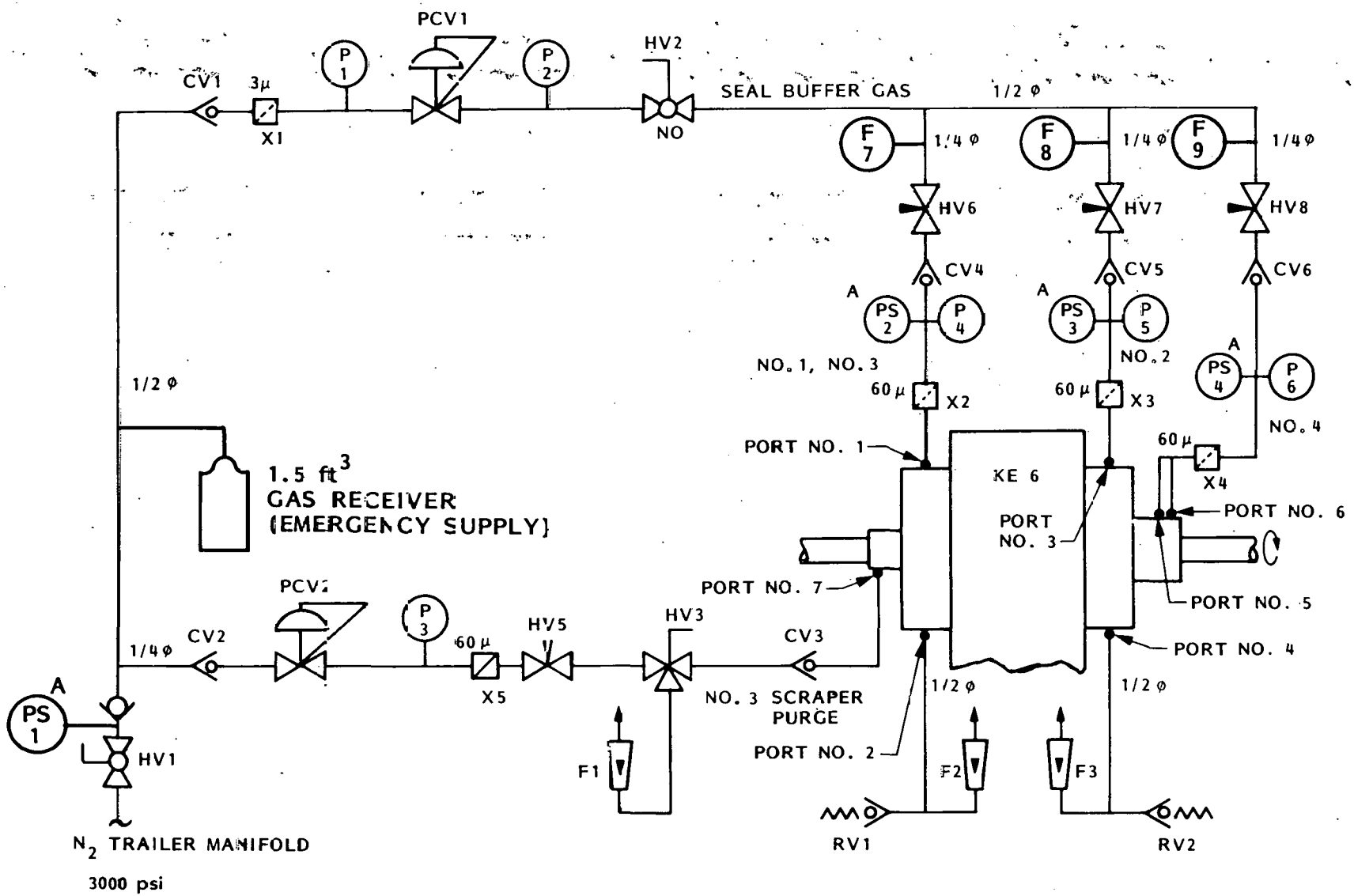

Fig. 4-3 Schematic of Seal Buffer Gas System

Table 4-2

PARTS LIST FOR CONTROL GAS SYSTEM

Item No.	Description	Tag No.
1	Diff. Pres Transmitter, Foxboro No. 11DM-SCI	DPT 1
2	Pressure Controller, Foxboro No. 43AP-FA42N-P	PC 1
3	Loading Station with I/O indication, Foxboro No 135 TG (-40 to +40 psi)	X1
4	Control Valve, Foxboro, No. V4A, C_v = 0.28	CV 1
5	Diaphragm Seal, Mansfield Green Type SB	X2
6	Filter, Norman No. 4352D-03PL-5CL-V	F1
7	Turbine Flowmeter, Cox No. GL 8-4	F2

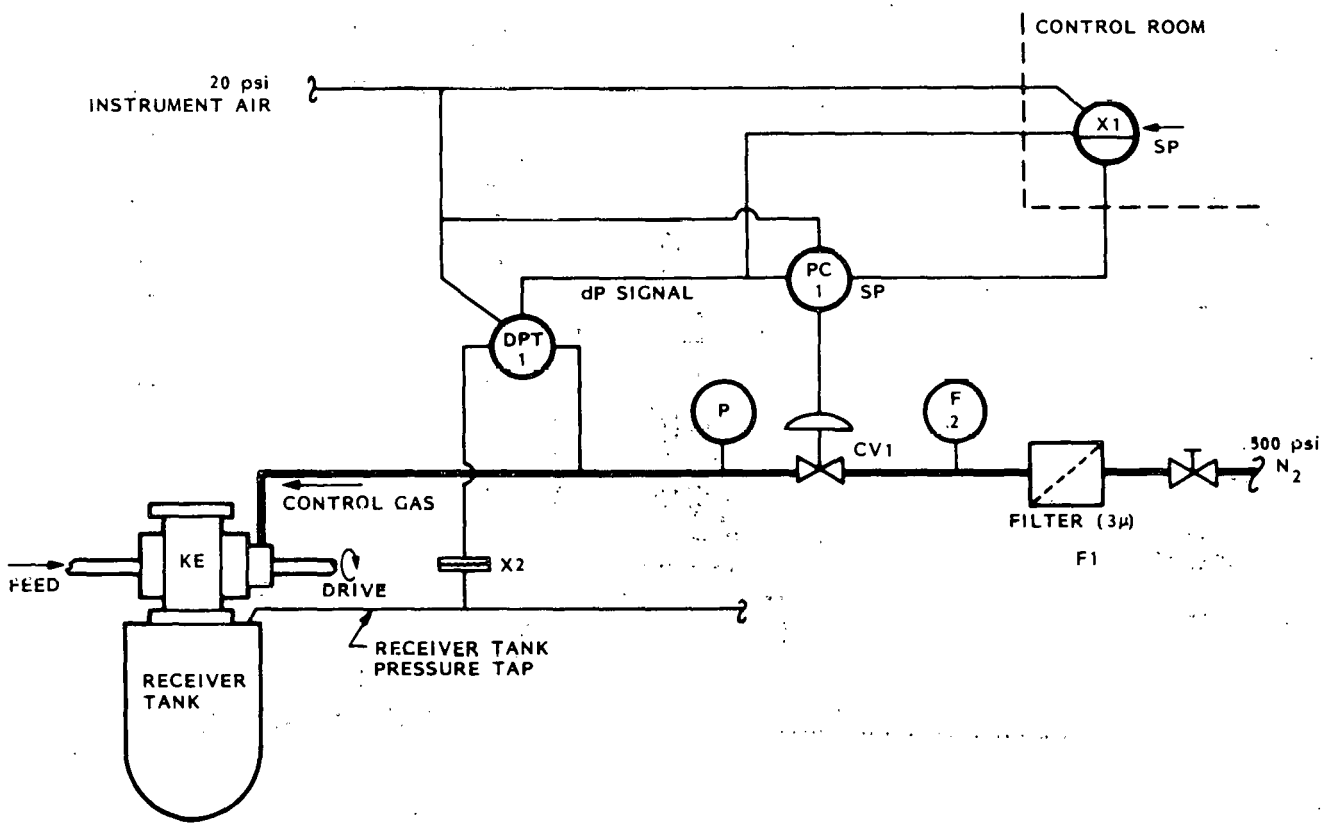

Fig. 4-4 Control Gas System Schmatic

Coal loading into the test loop has been cumbersome. Because the rate was limited by the 18-in. scalping screen, a larger 24-in. screen was purchased and installed to remedy this situation.

4.4 TEST SUPPLIES

Arrangements were made for the supply of high-pressure gaseous nitrogen to be delivered by tube trailer as needed by the test program. The test coal was purchased, ground to a nominal 45 percent passing 200 mesh. A screen analysis of the as-received coal is given in Table 4-3. The chemical analysis is shown in Table 4-4. The coal was mined at the King Mine by the United States Fuel Company, Hiawatha, Utah. A total of 20 tons of coal were purchased for the program.

Table 4-3
SCREEN ANALYSIS OF TEST COAL

Sieve	% Passing
50	93.8
100	76.5
200	45.2
325	-

4.5 TESTING

4.5.1 Test Configuration

The Model No. 6 Kinetic Extruder was installed in the test loop. A complete description of the test loop is given in Appendix C. This appendix also describes the operating procedures followed during the test program.

Table 4-5 indicates the sprue parts initially installed in the rotor. The four titanium carbide control nozzles exhibited an erratic behavior as described in section 4.5.9 and were replaced by tungsten carbide nozzles after 20 hours of endurance testing.

Table 4-4

CHEMICAL ANALYSIS OF TEST COAL

PROXIMATE ANALYSIS			ULTIMATE ANALYSIS		
	As Received	Dry Basis		As Received	Dry Basis
% Moisture	4.62	xxxxxx	% Moisture	4.62	xxxxxx
% Ash	7.17	7.52	% Carbon	70.46	73.87
% Volatile	42.37	44.42	% Hydrogen	5.23	5.48
% Fixed Carbon	45.84	48.06	% Nitrogen	1.40	1.47
			% Chlorine	0.00	0.00
	100.00	100.00	% Sulfur	0.61	0.64
			% Ash	7.17	7.52
Btu/lb	12,654	13,267	% Oxygen	10.51	11.02
% Sulfur	0.61	0.64	(diff)	100.00	100.00

% Moisture, Ash, Free Volatile	=	48.03
% Moisture, Ash, Free Fixed Carbon	=	51.97
Moisture, Ash, Free Btu/lb	=	14,346
Pounds of SO_2 per 10^6 Btu	=	0.965
% Dry, Mineral Matter Free Volatile	=	47.60
% Dry, Mineral Matter Free Fixed Carbon	=	52.40
Moist, Mineral Matter Free Btu/lb* (Based on As Received Moisture)*	=	14,346

Table 4-5

INITIAL INSTALLATION OF SPRUE PARTS IN THE ROTOR

Position	Funnel	Sprue Body	Control Nozzle
1	Aluminum	Titanium Carbide	Tungsten Carbide
2	Alloy 711	Stainless Steel	Silicon Carbide
3	Aluminum	Stainless Steel	Titanium Carbide
4	Alloy 12	Titanium Carbide	Tungsten Carbide
5	Aluminum	Stainless Steel	Silicon Carbide
6	Aluminum	Stainless Steel	Titanium Carbide
7	Aluminum	Titanium Carbide	Tungsten Carbide
8	Alloy 711	Stainless Steel	Silicon Carbide
9	Aluminum	Stainless Steel	Titanium Carbide
10	Alloy 12	Titanium Carbide	Tungsten Carbide
11	Aluminum	Stainless Steel	Silicon Carbide
12	Aluminum	Stainless Steel	Titanium Carbide

4.5.2 Test Conditions

During this program 265 hours of coal flow testing was accomplished. In addition, about 70 hours of running time was put on the machine without coal flow. During coal flow testing, the coal feeder is mainly operated at the standard test conditions shown in Table 4-6, but intermittently the feeder is operated at other pressure, speed and flow rate combinations to fully explore the operating range, and to determine if any operational changes occur during the test program.

Representative test data obtained during the test program are shown in Fig. 4-5 and Table 4-7. No change in performance was observed during the testing. Over 150 start-stop cycles were performed on the machine with no adverse effects on performance.

Table 4-6

STANDARD TEST CONDITIONS	
Coal Feed Rate	1.3 tph
Speed	3450 rpm
Receiver Pressure	75 psig
Control Gas Pressure Differential	+15 psid
Seal Buffer Gas Pressure	475 psig

The main emphasis of the program is on demonstrating reliability and durability of the equipment in sustained operation. Information on wear of key parts (e.g., seals, sprues, and control nozzles) is the most valuable data generated in these tests. Most of the testing was accomplished at relatively low delivery pressure (75 psi) because of letdown system limitations and lower rates of gas usage.

The fact that the bulk of the testing took place at reduced pressure in no way invalidates the sprue wear data. Rate of material loss in abrasive wear is generally correlated by some form of the Archard Equation (Ref. 2), i.e.,

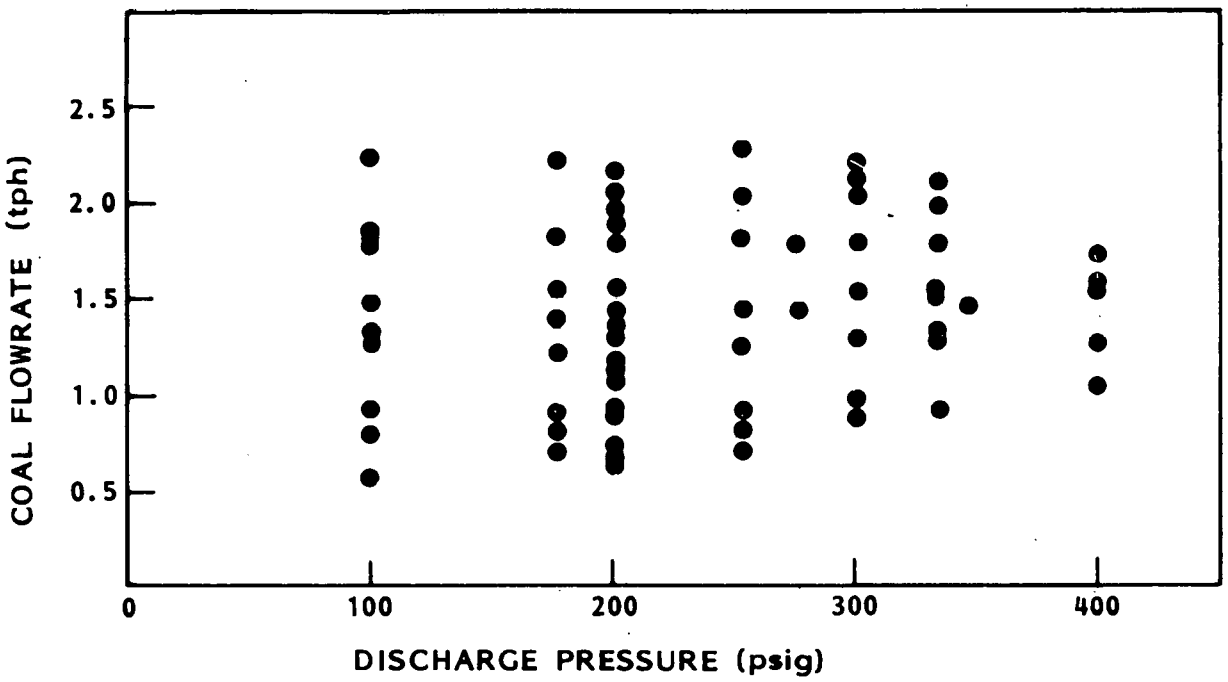

Fig. 4-5 KE Model No. 6 Performance Test Points

$$V = \frac{k\ u\sigma}{3h} \qquad (1)$$

where

V = wear rate (mm/s)
σ = rubbing load per unit area $kg/(mm)^2$
u = rubbing speed (mm/s)
h = material hardness $kg/(mm)^2$
k = empirical wear coefficient

Assuming the throughput (rubbing speed) is the same, the only variable in Eq. (1) that could be influenced by the delivery pressure is the wall rubbing stress (σ) in the sprues. Based on the stress analysis given by Meyer (Ref. 3), the wall rubbing stress is represented by

Table 4-7

SUMMARY OF SELECTED TEST DATA

Run Number	410	420	430	440		445	
Throughput (tph)	1.03	1.21	1.29	1.21	1.21	1.77	0.74
Delivery Pressure (psig)	115	100	70	75	175	175	175
Control Gas Pressure Differential (psid)	11	15	15	14	3	30	-11
Torque (ft-lb)	26.0	29.2	26.1	24.7	39.6	44.2	35.3
Speed (rpm)	2690	3080	3115	3090	3110	3105	3120
Rotor Eye Pressure (psia)	12.0	12.5	12.2	12.0	12.6	12.8	12.8
Control Gas Flow (scfm)	-	-	-	-	9.1	12.6	4.0
Receiver Coal Temperature (°F)	100	93	103	120	124	132	145
Eye Temperature (°F)	90	97	85	101	98	107	117
Suction Baghouse Pressure (in. Hg)	-	-		-	-6	-6	-
Suction System Flow (scfm)	-	-		-	8.3	7.2	-
No. 3 Seal Purge Flow (scfm)	6	6	6	6	6	6	6
Seal Buffer Gas Pressures (psig)	475	475	475	475	475	475	475
Seal Buffer Gas Flows (scfm)							
No. 1, No. 3	-	-	-	-	2.7	-	-
No. 2	-	-	-	-	1.3	-	-
No. 4	-	-	-	-	1.2	-	-
Accumulated Coal Pumping Hours	2.5	22.8	45.5	73.6			85.0

Table 4-7 (Cont.)

Run Number		462			472			478	
Throughput (tph)	1.32	1.62	1.51	1.26	0.73	2.05	1.56	0.95	2.04
Delivery Pressure (psig)	300	300	75	250	250	250	300	300	300
Control Gas Pressure Differential (psid)	-5	10	15	0	-20	30	0	-20	25
Torque (ft-lb)	52.8	54.0	28.8	47.8	42.7	51.0	53.8	48.7	55.6
Speed (rpm)	3355	3350	3450	3250	3250	3250	3300	3300	3300
Rotor Eye Pressure (psia)	12.0	12.0	11.5	12.5	13.0	12.0	12.0	12.2	12.0
Control Gas Flow (scfm)	14.8	17.6	3.8	20.3	11.3	24.5	19.7	12.0	23.5
Receiver Coal Temperature (°F)	153	160	156	97	115	127	119	141	145
Eye Temperature (°F)	118	124	128	77	86	96	93	106	112
Suction Baghouse Pressure (in. Hg)	-7.0	-7.5	-	-7.0	-7.0	-7.5	-7.0	-7.0	-7.0
Suction System Flow (scfm)	10.8	10.0	-	13.5	15.6	12.0	11.0	11.0	10.0
No. 3 Seal Purge Flow (scfm)	6	6	6	6	6	6	6	6	6
Seal Buffer Gas Pressure (psig)	475	475	475	475	475	475	475	475	475
Seal Buffer Gas Flows (scfm)									
No. 1, No. 3	3.7	-	2.7	2.6	-	-	-	-	-
No. 2	1.7	-	1.5	1.5	-	-	-	-	-
No. 4	0.6	-	1.5	0.9	-	-	-	-	-
Accumulated Coal Pumping Hours			119.6			140.7			155.6

Table 4-7 (Cont.)

Run Number	491			496			501	
Throughput (tph)	1.13	1.58	1.13	2.15	0.9	1.64	0.94	0.70
Delivery Pressure (psig)	400	400	200	200	200	340	340	340
Control Gas Pressure Differential (psid)	-30	-10	0	40	-8	20	-20	-30
Torque (ft-lb)	75.0	76.0	30.0	36.3	28.7	71.8	63.2	60.6
Speed (rpm)	3660	3660	2850	2850	2850	3600	3600	3600
Rotor Eye Pressure (psia)	12.4	12.2	11.0	11.0	11.0	11.0	11.3	11.4
Control Gas Flow (scfm)	19.0	23.5	9.0	15.5	6.5	26.4	16.0	12.0
Receiver Coal Temperature (°F)	135	155	134	136	144	130	154	169
Eye Temperature (°F)	100	108	111	113	115	99	108	119
Suction Baghouse Pressure (in. Hg)	-7.0	-7.0	-9.7	-	-9.0	-	-9.8	-
Suction System Flow (scfm)	13.5	12.0	6.8	-	8.1	-	10.0	-
No. 3 Seal Purge Flow (scfm)	6	6	6	6	6	6	6	6
Seal Buffer Gas Pressure (psig)	475	475	475	475	475	475	475	475
Seal Buffer Gas Flows (scfm)								
No. 1, No. 3	-	-	-	-	-	-	-	-
No. 2	-	-	-	-	-	-	-	-
No. 4	-	-	-	-	-	-	-	-
Accumulated Coal Pumping Hours	-	185.3			196.0			206.0

Table 4-7 (Cont.)

Run Number	504
Throughput (tph)	1.40
Delivery Pressure (psig)	75
Control Gas Pressure Differential (psid)	10
Torque (ft-lb)	26.4
Speed (rpm)	3300
Rotor Eye Pressure (psia)	10.1
Control Gas Flow (scfm)	4
Receiver Coal Temperature (°F)	125
Eye Temperature (°F)	105
Suction Baghouse Pressure (in. Hg)	-
Suction System Flow (scfm)	-
No. 3 Seal Purge Flow (scfm)	6
Seal Buffer Gas Pressure (psig)	475
Seal Buffer Gas Flows (scfm)	
No. 1, No. 3	3.2
No. 2	1.9
No. 4	1.7
Accumulated Coal Pumping Hours	210.4

Table 4-7 (Cont.)

Run Number			505				515	
Throughput (tph)	1.79	0.93	1.79	1.56	1.33	1.06	1.10	1.09
Delivery Pressure (psig)	100	100	340	340	340	75	75	200
Control Gas Pressure Differential (psid)	30	0	5	-5	-15	10	10	10
Torque (ft-lb)	24.9	19.1	68.0	65.2	62.0	-	-	-
Speed (rpm)	2700	2700	3600	3600	3600	3000	3000	3000
Rotor Eye Pressure (psia)	10.2	10.1	11.1	11.1	11.2	10.0	10.0	11.0
Control Gas Flow (scfm)	7.5	3	25.0	21.0	17.5	7.0	7.0	16.0
Receiver Coal Temperature (°F)	111	116	137	150	165	90	95	105
Eye Temperature (°F)	95	96	100	112	121	78	83	84
Suction Baghouse Pressure (in. Hg)	-10.0	-	-	-9.7	-9.5	-9.5	-	-10.0
Suction System Flow (scfm)	6.2	-	-	9.5	9.9	6.7	-	9.6
No. 3 Seal Purge Flow (scfm)	6	6	6	6	6	6	6	6
Seal Buffer Gas Pressure (psig)	475	475	475	475	475	475	475	475
Seal Buffer Gas Flows (scfm)								
No. 1, No. 3	-	-	-	-	-	3.8	3.4	-
No. 2	-	-	-	-	-	2.6	2.4	-
No. 4	-	-	-	-	-	1.4	1.3	-
Accumulated Coal Pumping Hours					213.4			219.9

Table 4-7 (Cont.)

Run Number	528	
Throughput (tph)	1.23	1.51
Delivery Pressure (psig)	75	300
Control Gas Pressure Differential (psid)	10	-5
Torque (ft-lb)	-	-
Speed (rpm)	3000	3600
Rotor Eye Pressure (psia)	10	11
Control Gas Flow (scfm)	-	20
Receiver Coal Temperature (°F)	90	123
Eye Temperature (°F)	78	86
Suction Baghouse Pressure (in. Hg)	-	-10
Suction System Flow (scfm)	-	10.8
No. 3 Seal Purge Flow (scfm)	6	6
Seal Buffer Gas Pressure (psig)	475	475
Seal Buffer Gas Flows (scfm)		
No. 1, No. 3	3.7	
No. 2	3.0	
No. 4	1.2	
Accumulated Coal Pumping Hours		241.3

Table 4-7 (Cont.)

Run Number	535		536
Throughput (tph)	1.24	1.48	1.52
Delivery Pressure (psig)	75	200	300
Control Gas Pressure Differential (psid)	10	5	0
Torque (ft-lb)	-	-	-
Speed (rpm)	3000	3600	3600
Rotor Eye Pressure (psia)	10	10	9
Control Gas Flow (scfm)	-	13	17.5
Receiver Coal Temperature (°F)	82	100	115
Eye Temperature (°F)	72	79	83
Suction Baghouse Pressure (in. Hg)	-	-11	-11
Suction System Flow (scfm)	-	7.5	9.8
No. 3 Seal Purge Flow (scfm)	6	6	6
Seal Buffer Gas Pressure (psig)	475	475	475
Seal Buffer Gas Flows (scfm)			
No. 1, No. 3	3.4	4.0	3.5
No. 2	2.8	2.5	2.0
No. 4	1.1	1.0	0.5
Accumulated Coal Pumping Hours		248.6	250.1

$$\sigma = \frac{\rho_b G - \frac{dp}{dr} D}{4\mu} \qquad (2)$$

where

μ = wall friction coefficient

ρ_b = coal bulk density

D = channel diameter

G = rw^2, centrifugal acceleration

$\frac{dp}{dr}$ = gas pressure gradient in the sprues

According to Eq. (2), the rubbing stress is maximal when dp/dr = 0, which corresponds to pumping at zero back pressure. The rubbing stress disappears completely when $\rho_b G$ = dp/dr, which would correspond to a fluidized condition in the sprues. The sprue plug is unstable in a fluidized condition, and the operating rotor speed is selected so that there is a reasonable excess of centrifugal force over the pressure gradient. For example, $\rho_b G$ = (1.33) dp/dr, or a 33-percent excess. Thus, for this example, the rubbing stress and sprue wear rates occurring while pumping at full pressure would be only one-third as much as that which would take place at zero pressure but at the same rotational speed and throughput. Conducting the verification tests at reduced pressure will, therefore, tend to actually accelerate wear in the sprues.

The control nozzles have only a small pressure differential so that wear in this key component will be independent of pressure.

To conclude, the wear-data results are not devalued by running at low pressure if the correct running speed is used. Equations (1) and (2) may be used to interpret the data in terms of wear coefficient and then to apply it to scaled-up feeders.

4.5.3 PERFORMANCE DATA CORRELATION AND PREDICTION

The coal flow rate through the machine obeys an equation of the form (Ref. 1):

$$\dot{M} = B \frac{\rho_c}{\rho_c^o} [G + A \Delta P_N]^{1/2} \tag{3}$$

where

B	=	$12\ C_D d^{5/2}$ (12 nozzles)
d	=	nozzle diameter
C_D	=	nozzle discharge coefficient
ρ_c/ρ_c^o	=	test coal bulk density/reference density
ρ_c^o	=	50 lb/ft^3
G	=	rw^2/g, g-force at nozzle discharge
ΔP_N	=	control nozzle gas pressure differential
A	=	control gas pressure constant

The parameters A and B may be treated as empirical constants for a given set of nozzle hardware. Based on the present testing, these constants are well represented by $A = 520\ \text{psi}^{-1}$ and $B = 0.011$ tph over the operating envelope of the Model No. 6 machine.

The control nozzle pressure differential, ΔP_N, contains a component over and above that set on the controller due to the centrifugal head of the control gas within the rotor channels. The total ΔP_N may be computed from:

$$\Delta P_N = \Delta P_c + \rho_g \frac{r^2 w^2}{2} \tag{4}$$

where

ΔP_c = control gas pressure differential at injection point on shaft

ρ_g = control gas density

The control gas density is a function of pressure and temperature. Equations (3) and (4) are sufficient to determine the performance map giving coal flow as a function of ΔP_c with rotor speed and pressure as parameters. A set of such performance curves for the Model No. 6 Kinetic Extruder are given in Fig. 4-6. Figures 4-7, 4-8, 4-9, 4-10, and 4-11 show test data for different conditions compared with the calculated curves using Eq. (3). These data verify that Eq. (3) is applicable over a wide range of conditions.

4.5.4 WEAR AND EXPECTED LIFE OF PARTS

After 217 hours of testing the machine was disassembled and parts were examined for wear. The results indicate that wear resisting materials have been identified which will have a useful life of more than one year (8,000 h). Funnels made from Alloy No. 12 may last six years, based on observed performance.

Wear of Sprue Parts

Table 4-8 indicates the sprue parts removed from the rotor. Table 4-9 summarizes the wear data for the sprue parts.

To determine the useful life of the sprue parts we have calculated the percentage worn during the testing, and using our performance prediction computer program we have estimated the allowable wear of the parts. Assuming a linear relationship between wear and operating time, we can thus estimate the useful life of the parts. The results are shown in Table 4-10. We are not able to calculate a useful life for the control nozzle since no measurable weight loss or diameter change was detected. The discharge coefficient also was unchanged. We estimate the useful life at more than 8,000 hours.

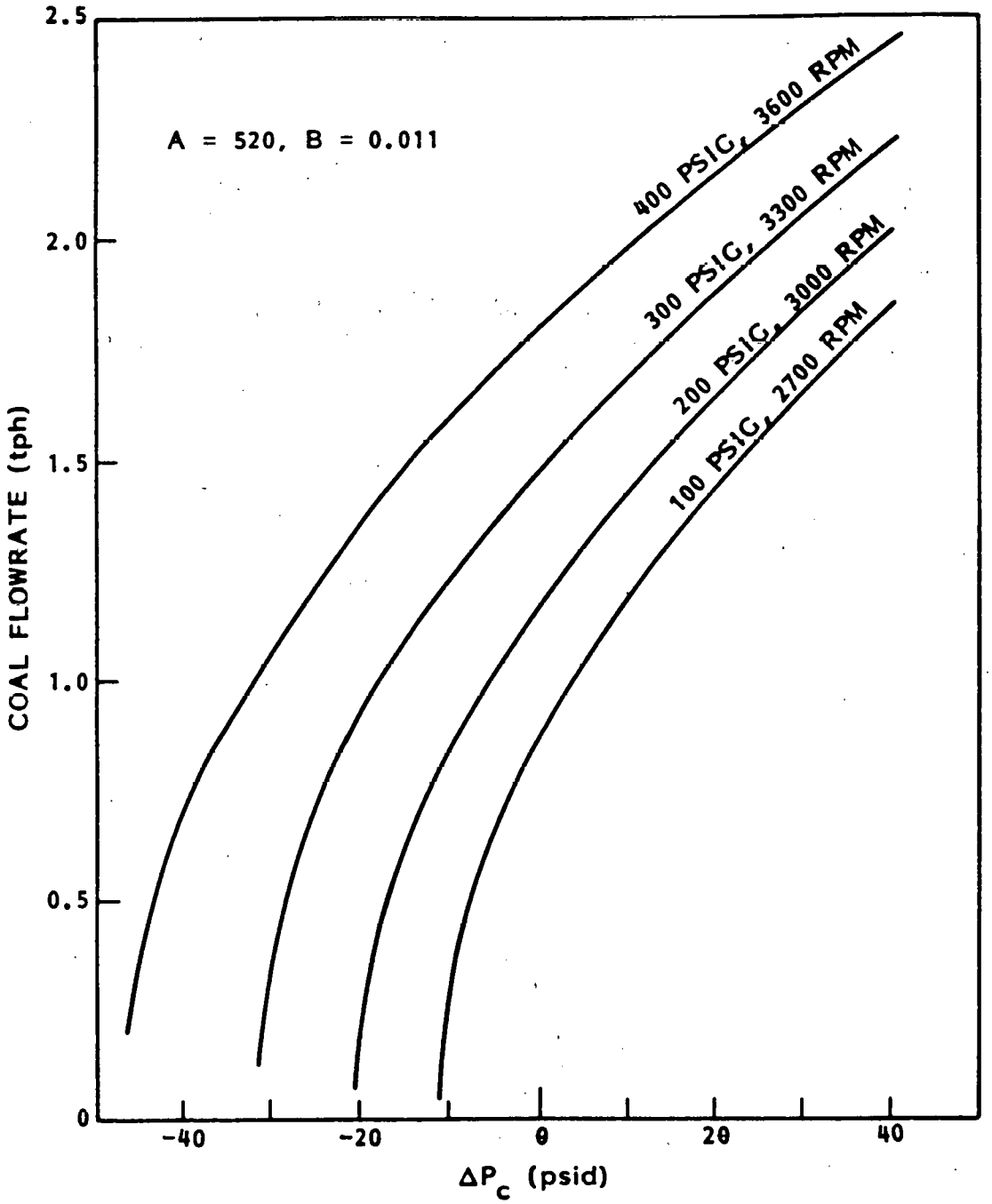

Fig. 4-6 Predicted Performance According to Eq. (3) Coal Flow Rate Versus Control Gas Pressure Differential Setting

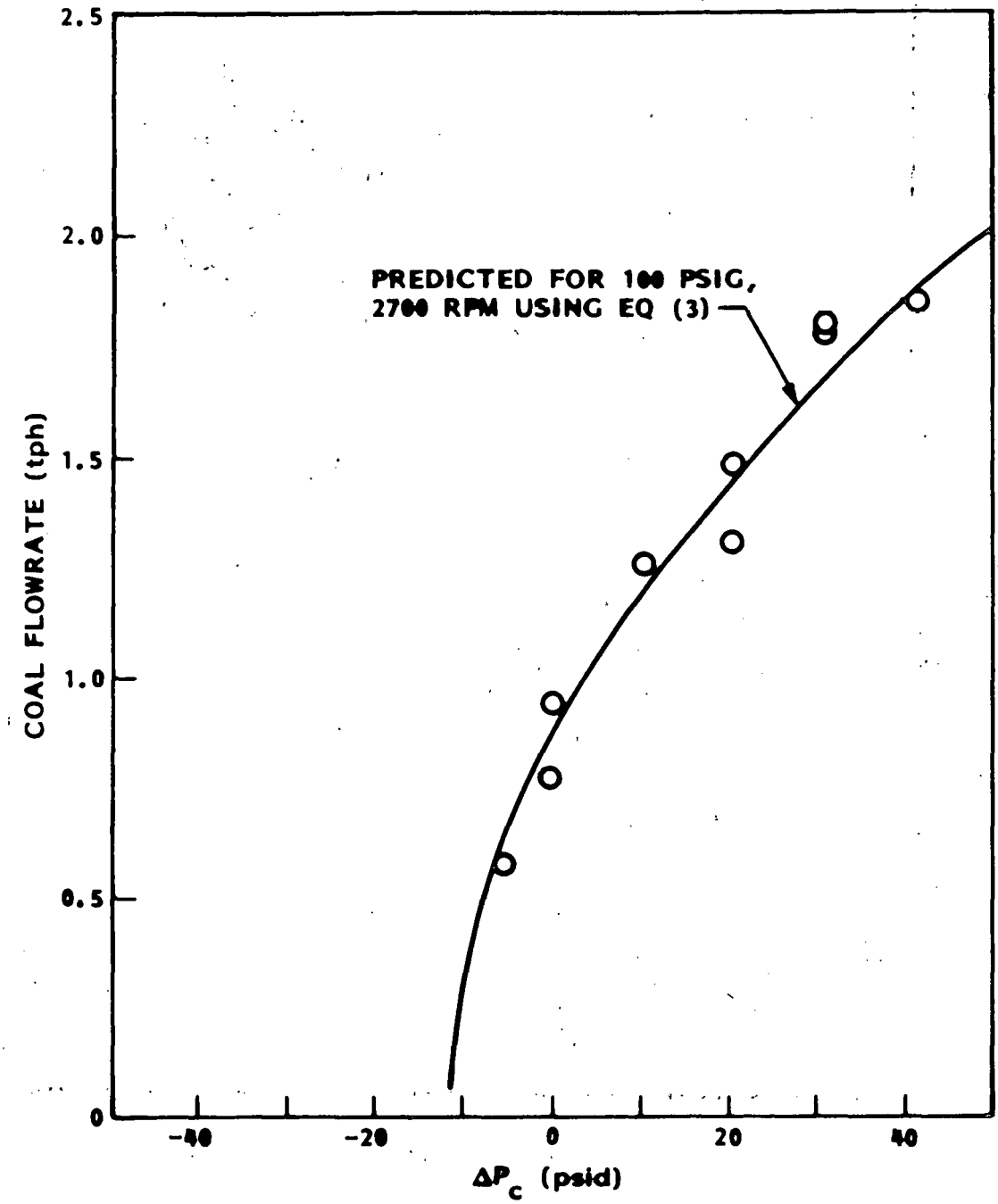

Fig. 4-7 Test Data, 100 psig, 2700 rpm

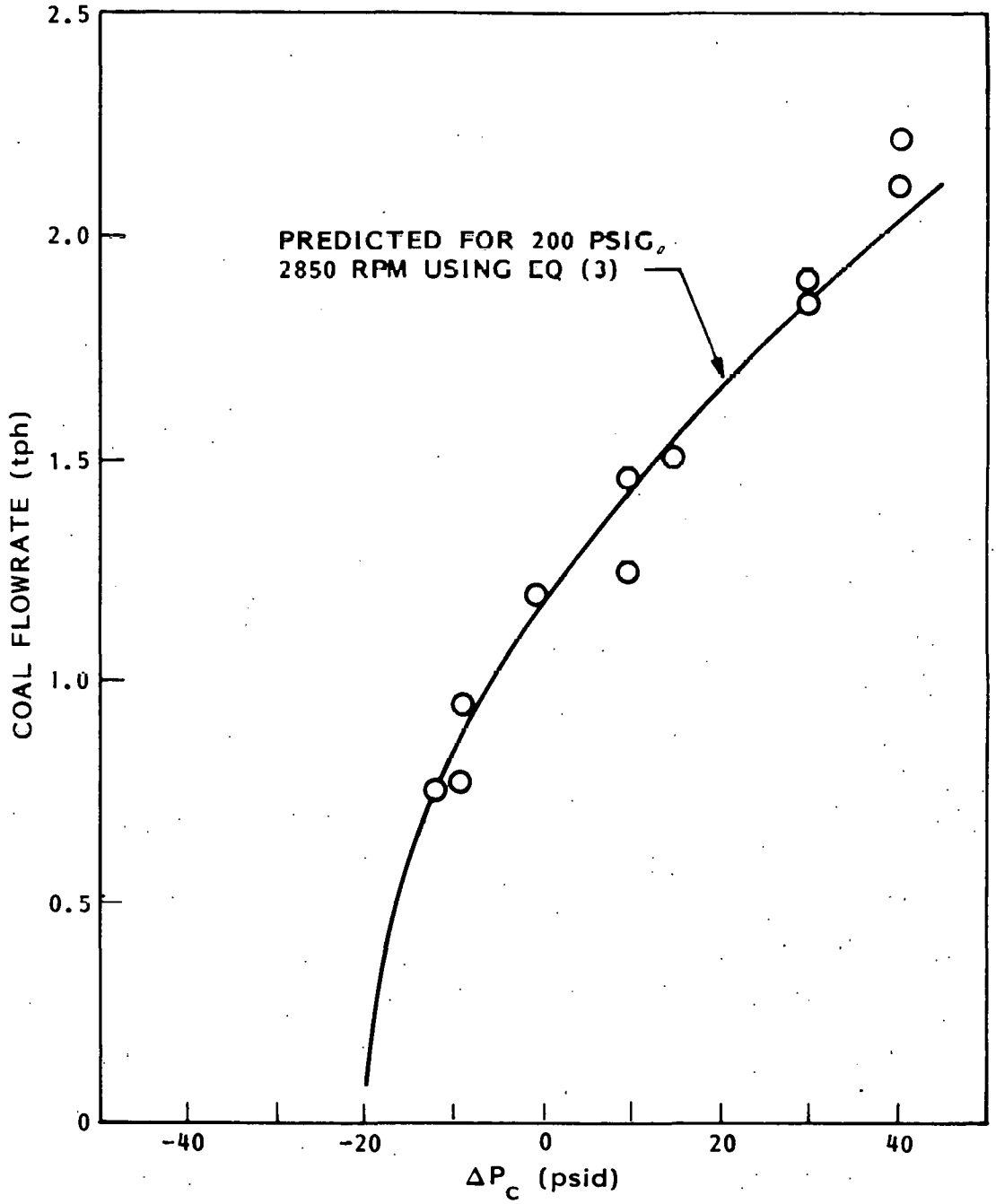

Fig. 4-8 Test Data, 200 psig, 2850 rpm

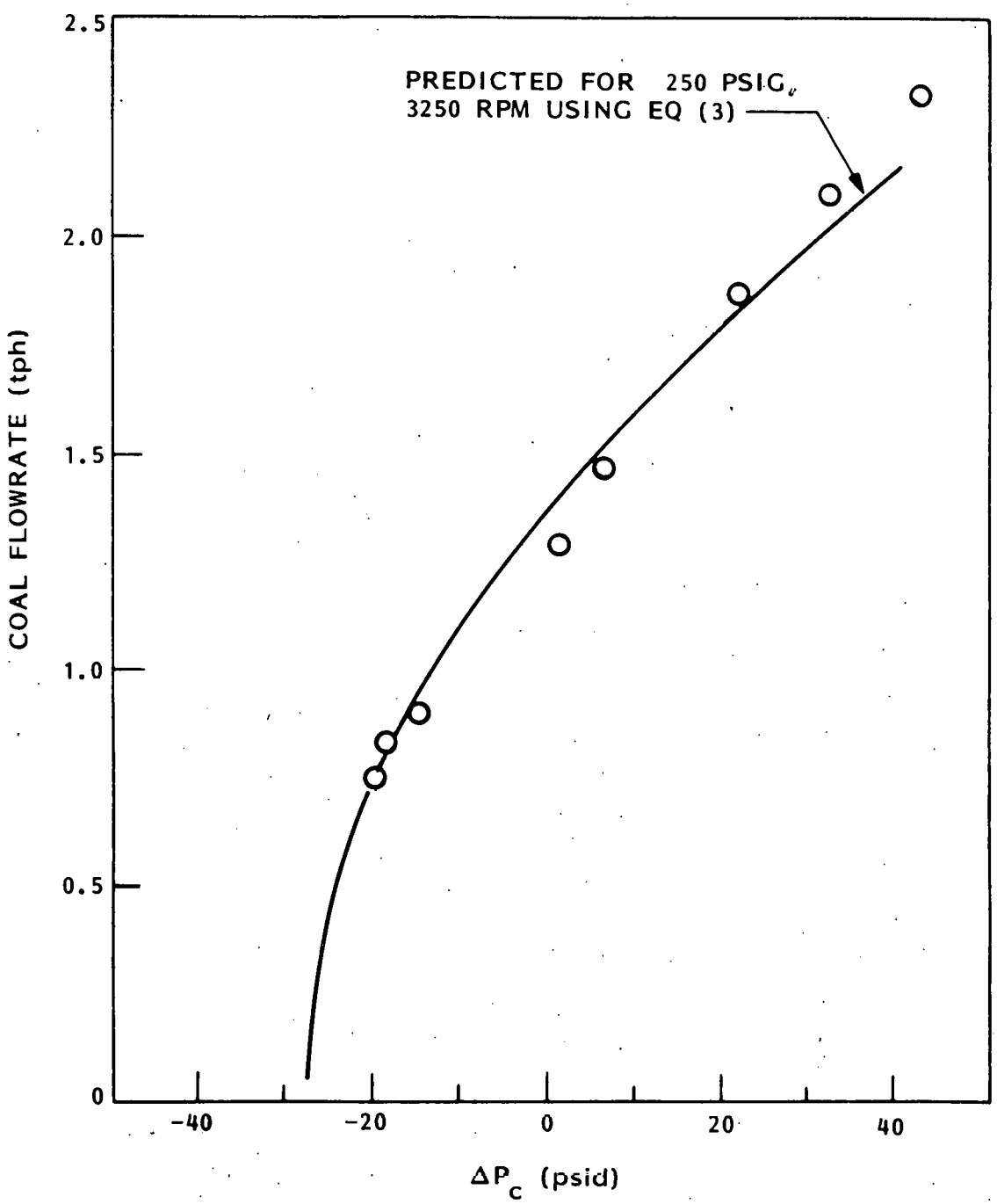

Fig. 4-9 Test Data, 250 psig, 3250 rpm

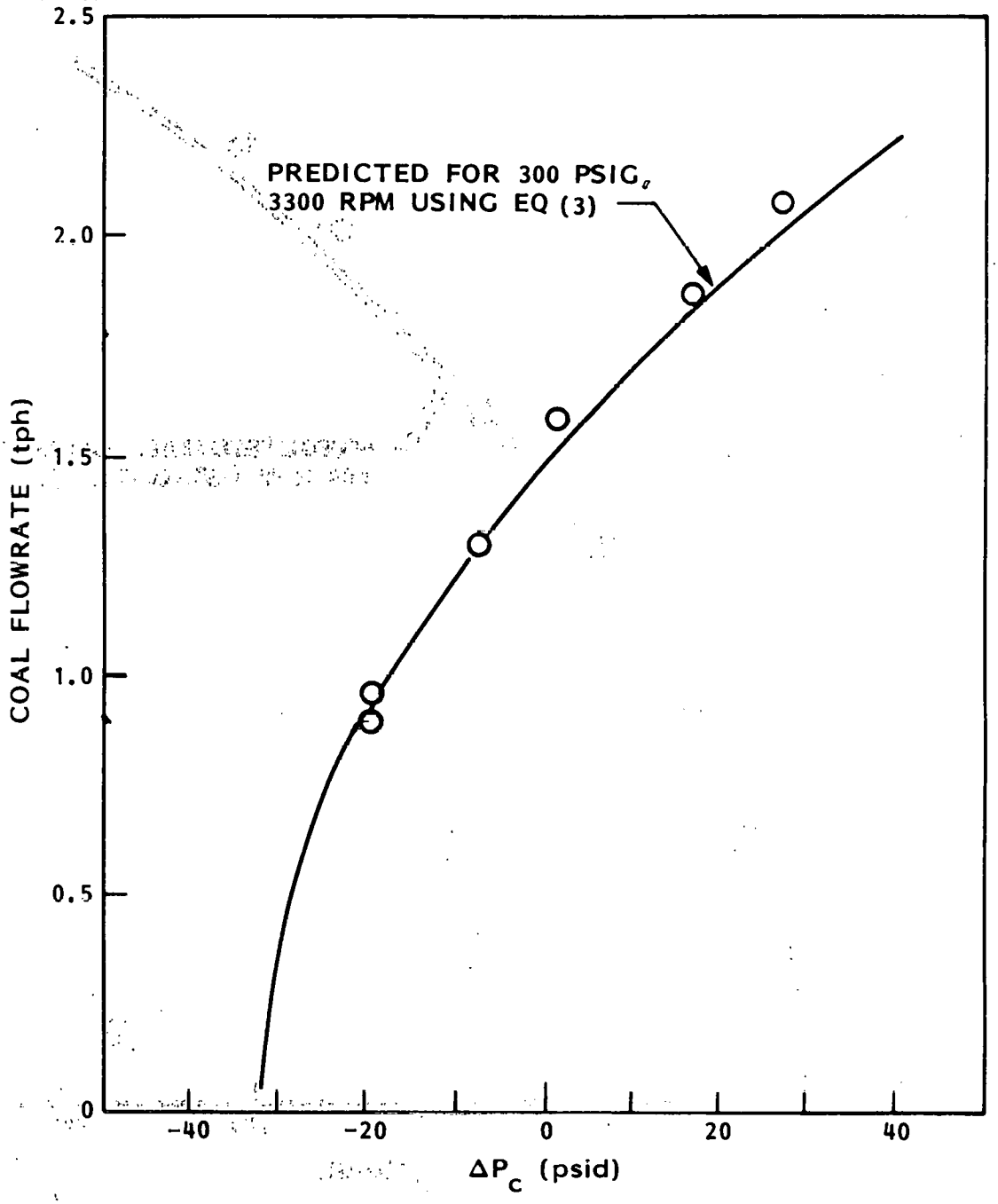

Fig. 4-10 Test Data, 300 psig, 3300 rpm

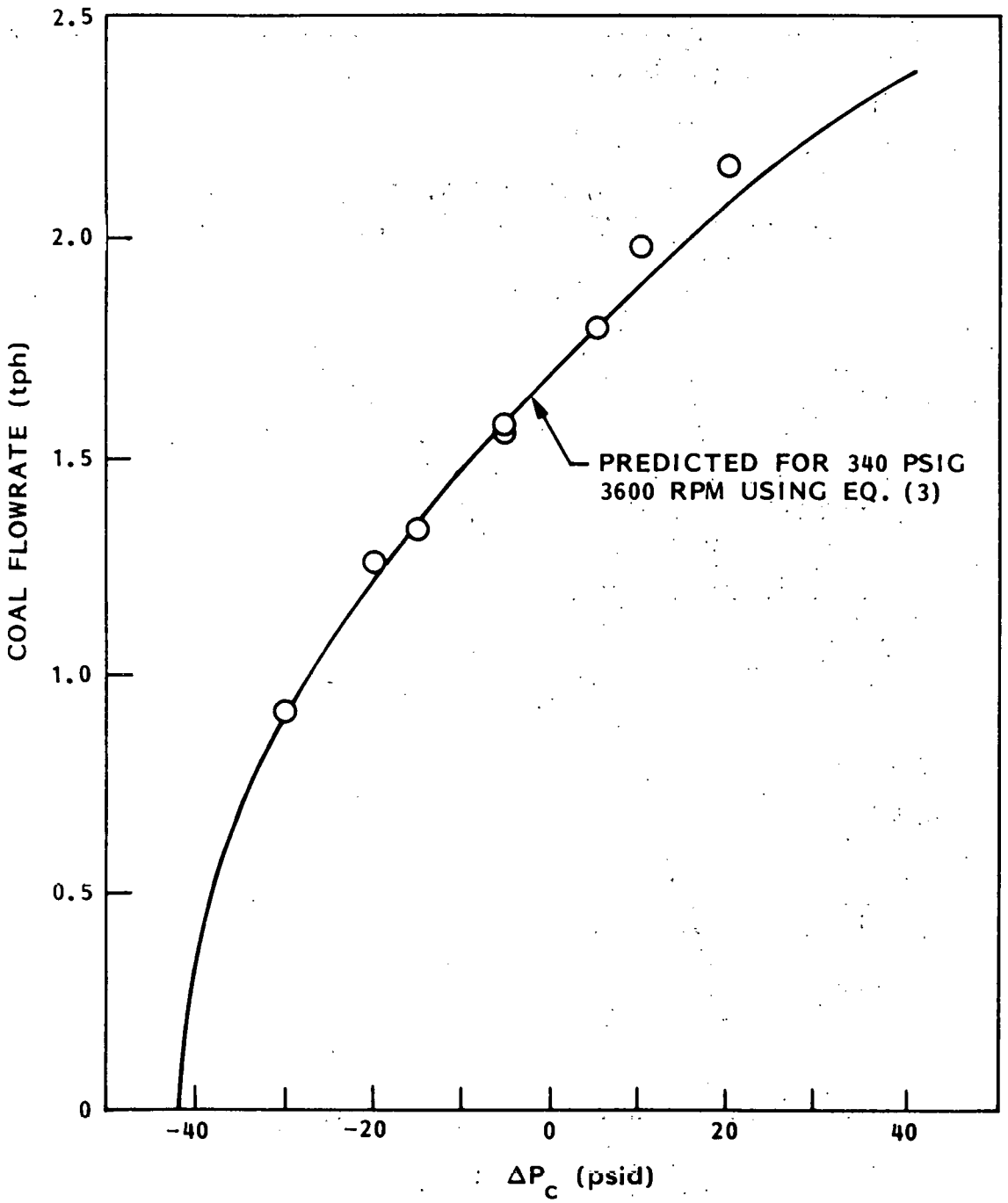

Fig. 4-11 Test Data, 340 psig, 3600 rpm

Table 4-8

INSTALLATION OF SPRUE PARTS IN THE ROTOR

Position	Funnel	Sprue Body	Control Nozzle
1	Aluminum	Titanium Carbide	Tungsten Carbide
2	Alloy 711	304 Stainless Steel	Silicon Carbide
3	Aluminum	304 Stainless Steel	Tungsten Carbide
4	Alloy 12	Titanium Carbide	Tungsten Carbide
5	Aluminum	304 Stainless Steel	Silicon Carbide
6	Aluminum	304 Stainless Steel	Tungsten Carbide
7	Aluminum	Titanium Carbide	Tungsten Carbide
8	Alloy 711	304 Stainless Steel	Silicon Carbide
9	Aluminum	304 Stainless Steel	Tungsten Carbide
10	Alloy 12	Titanium Carbide	Tungsten Carbide
11	Aluminum	304 Stainless Steel	Silicon Carbide
12	Aluminum	304 Stainless Steel	Tungsten Carbide

Table 4-9

WEAR SUMMARY

	Avg Wt. Before Testing* (gms)	Avg Wt. Loss (gms)	Change in Outlet Diameter
Nozzles:			
Tungsten Carbide	204.0	0	No change
Silicon Carbide	42.4	0	No change
Sprue Bodies:			
Titanium Carbide	167.2	0.2	No change
Stainless Steel	200.9	4.9	4 mils
Funnels:			
Alloy #12	327.3	0.3	Not determined
Alloy #711	310.6	0.6	Not determined
Aluminum	94.6	9.8	Not determined

*Weighing Accuracy ±0.05 gm on individual parts

Table 4-10

ESTIMATED LIFE EXPECTANCY OF SPRUE PARTS

	% Wt. Loss	Tolerable % Loss	Life Expectancy
Nozzles:			
Tungsten Carbide	0	Not determined	Not determined
Silicon Carbide	0	Not determined	Not determined
Sprue Bodies:			
Titanium Carbide	0.12	10	18,000 h
Stainless Steel	2.4	10	900 h
Funnels:			
Alloy #12	0.09	20	48,000 h
Alloy #711	0.19	20	23,000 h
Aluminum Alloy	10.4	20	417 h

Wear of Rotor and Nozzle Retainer Blocks

Wear on the rotor was only detected in the immediate vicinity to the nozzle blocks and varied in intensity in accordance with the fit between the blocks and the rotor. A bad fit gives rise to erosion. The erosive action tends to blend in the parts. Similar wear was observed on the nozzle blocks.

Wear on Housing

No wear could be detected inside the housing with the exception of a small area in the center of the cover. This area is closer to the rotor than the remainder of the housing (1.5 in. distance from the rotor at the top and 3 in. distance at the side).

Seals and Bearings

During disassembly of the unit we noticed an oil like fluid in the vicinity of the feed side bearing. This fluid also had contaminated the No. 1 seal. No oily liquid was observed next to the drive side bearing. The seals and bearings were returned to the factory for inspection.

Inspection of Seals. The seals were completely disassembled at the Crane Packing Company.

Inspection of Seal No. 1 confirmed the infiltration of oil into the outboard seal surface and a minor indication of a wear-in type contact on the inboard seal surface.

One of the four sealing surfaces of Seal No. 4 showed traces of minor contamination by grit or metal chips.

The inboard seal surface of Seal No. 3 indicated the presence of coal dust at the outer periphery. The dust apparently was able to enter the gap during the stop cycle when thermal expansion and depressurization put an additional load on the springs which are installed in the seal to close the gap on shutdown. The spring load has been doubled.

The sealing surfaces were repolished as needed and minor modifications were implemented to facilitate assembly and disassembly of the seals in the Kinetic Extruder. The seals were returned to Lockheed, Sunnyvale and were reinstalled in the machine.

There was no indication of seal performance change during the test program, and except for the oil contamination the seals should have continued to perform well in the "as removed" condition.

To avoid any potential of material infiltrating the seal surfaces after shutdown, our operating procedure was modified to provide for seal gas pressurization (and therefore seal gas flow) after shutdown and until the machine is cooled down.

The additional testing accomplished has reinforced our belief that the shutdown implemented after 217 hours was not required by the machine. It was prudent to stop the testing at the time to investigate the potential cause of the torque increase and to avoid potential damage. But based on the evidence, the machine, most likely, could have "broken loose" and functioned normally.

Inspection of Bearings. The bearings were shipped to the FAG Bearing Corp., Stamford, Connecticut. The raceway and balls were in excellent condition, showing no signs of wear, corrosion or heat discoloration. The cage was not bent or damaged. The bore of the inner race of the feed side bearing showed signs of an uneven wear pattern caused by installation or disassembly of the unit. The grease in the feed side bearing was degraded, giving rise to the oily deposit observed during disassembly. No cause for this degradation of the grease has been positively identified. Action taken is described in the following section.

4.5.5 Bearing and Lubricant Selection

As indicated earlier, some of the grease in the feed side bearing had broken down during the endurance testing. An oily product had been found in the vicinity of the bearing. It was believed that this bearing had overheated and the grease had thermally degraded. To correct this situation, the recommendation was made to use a high temperature grease in the bearing. An L-14 grease was selected. Since factory lubricated bearings were not available, off-the-shelf bearings lubricated with L-10 grease were shipped to a vendor who repacked the bearings with high temperature grease. This step was taken in accordance with the manufacturer's recommendations.

These bearings were installed in the machine and thermocouples were placed adjacent to the bearings to monitor the thermal environment.

Testing showed relatively high bearing temperatures and unstable operation when speeds exceeded 2200 rpm and the temperature exceeded 200°F. The machine was disassembled and inspection of the bearings clearly indicated that factory procedure for grease packing of the bearings had not been followed by the vendor - the bearing cavities were 100 percent filled with grease. Since the vendor would not perform under our supervision, an attempt was made to follow the factory recommendation of a 5-percent grease loading by modifying the bearing on site. The modified bearing performed close to the original version.

An effort was made to locate factory lubricated bearings with a high temperature grease and a C-3 fit. We were able to locate one bearing with an L-12 grease. This bearing was installed on the drive side and a factory lubricated bearing with a C-3 fit and the standard L-10 grease was installed at the feed side.

The bearings were tested to speeds up to 3600 rpm. During the initial run-in, the L-12 lubricated bearing ran about 25°F hotter than the L-10 lubricated bearing. No operational problems have been encountered with this configuration.

The observed and unexplained difficulties with the feed side bearing, although resolved for the present on our machine, caused us to bring aboard a bearing consultant to suggest precautions to be taken for future applications. The initial assessment indicates that grease lubricated bearings can handle the envisioned environment, but proper volumetric grease loading, proper selection of grease and bearing internal clearance must be made in addition to close attention to fit, i.e., the dimensional tolerance of the bearing/machine interface.

Review of available data suggests that the initial oily residue observed in the vicinity of the feed side bearing was caused by mechanical action on the grease rather than by thermal degradation. This would not interfere with the operation of the machine.

The L-14 lubricated bearing was damaged during the test runs while packed 100 percent with grease. The damage was caused by differential thermal expansion of the parts. Repacking the bearing with 5 percent grease did not change the behavior of this damaged bearing.

The newly installed bearings perform well and running temperatures indicate no problems under our operating conditions.

Several potential improvements to the Model 6 machine have been identified to make it more tolerant for the bearings when exposed to high operating temperatures, large temperature gradients, and to avoid bearing misalignment. These include:

- Better matching of materials with regard to the coefficient of thermal expansion. This helps to maintain dimensional clearances between parts when the parts are heated.
- Provide a good heat transfer path to dissipate heat generated in the bearing. This helps reduce bearing temperature.
- Redesign the bearing end plate interface to increase the length/diameter ratio of the slip surface. This will reduce any possible tendency to misalign. An alternate design would use a cylindrical roller bearing and grease shields to keep the grease in the bearing housing. Such a design permits axial motion without slipping the bearing race.
- Careful selection of bearing internal clearance (class of fit) and grease to be compatible with the anticipated temperature environment.

4.5.6 Attrition of Feedstock

During verification testing, the test loop coal inventory is recycled through the Kinetic Extruder about two times an hour, on the average. Typically, the

coal load is replaced every 15 hours of running time. The coal thus makes about 30 passes around the circuit before removal.

Some attrition, with repeated passes through the letdown transfer pipe, was expected, and for this reason a somewhat coarser than normal coal grind was procured (45 percent passing, 200 mesh). However, attrition turned out to be so little as to be difficult to measure by screen analysis, even after many passes around the loop.

Table 4-11 lists screen analysis results for test loop coal samples taken at different times during test runs with three separate test loop coal loads. As shown, the data are rather ambiguous as to the rate of attrition. The coal load #3 data show some increase in fineness with inventory age but the #2 data clearly do not. The data for coal load #1 are mixed but generally shows some slight trend toward fineness.

The conclusion to be drawn from this data is that coal attrition is very minor even with multiple passes around the test loop. Certainly, the attrition on a single pass is so small as to be undetectable.

Table 4-11

SCREEN ANALYSIS RESULTS (NOMINAL COAL GRIND 45% - 200)

Coal Load No.	#1				#2			#3		
Sample No.	253	255	256	257	271	272	273	277	278	279
Elapsed Test Time With Coal Load (h)*	0	0.6	6.6	12.4	1.9	4.0	9.4	2.0	8.4	15.7
Permeability (10^{-12} ft^2)	9.6	7.5	4.8	3.8	7.3	5.0	3.8	6.4	4.3	4.0
% Passing Sieve No. 50	93.8	91.3	92.5	96.5	95.0	93.8	96.1	92.7	94.7	98.3
100	76.5	69.6	69.9	77.1	74.8	68.2	70.2	72.1	75.2	83.6
200	45.2	40.2	41.6	46.9	41.1	37.5	40.1	41.7	44.5	50.6
325	-	-	-	-	-	-	-	0.7	4.1	0.4

*coal inventory is recycled through the KE an average of two times per hour.

4.5.7 Control Gas Consumption

In a Kinetic Extruder based feed system, control gas constitutes the principal gas flow requirement for coal pressurization. The gas flow rate is basically that required to pressurize the pores in the control nozzle coal plug up to the nozzle pressure. As such, it varies linearly with coal flow rate and with process pressure. It may be conveniently expressed as a certain volumetric flow per unit mass flow of coal, i.e., ACFM gas/tph coal.

Figure 4-12 normalized control gas flow data obtained during the test program is plotted as a function of receiver pressure. Most of the data falls in a band at 0.4 to 0.7 ACFM/tph.

The data at the upper edge and above the main band had lower coal flows and a higher than usual sprue gas leakage, which the control gas flow must make up for. This increases the control gas flow above the normal value.

4.5.8 Transient Response

Response of the Kinetic Extruder coal flow rate to changes in control nozzle pressure is essentially instantaneous. Overall response time is, therefore, governed by the speed of the controller and control valve action and the capacitance of the piping between the valve and the KE control nozzles. Figure 4-13 shows chart recorder data on the control pressure, ΔP_c, transient resulting after step changes in the controller setting. As shown, the 63 percent response time is about 2 s for ΔP_c increases and 4 s for ΔP_c decreases. The difference being due to the fact that control gas flow is proportional to coal flow, and the gas inventory in the piping lasts longer when the coal flow rate is stepped down.

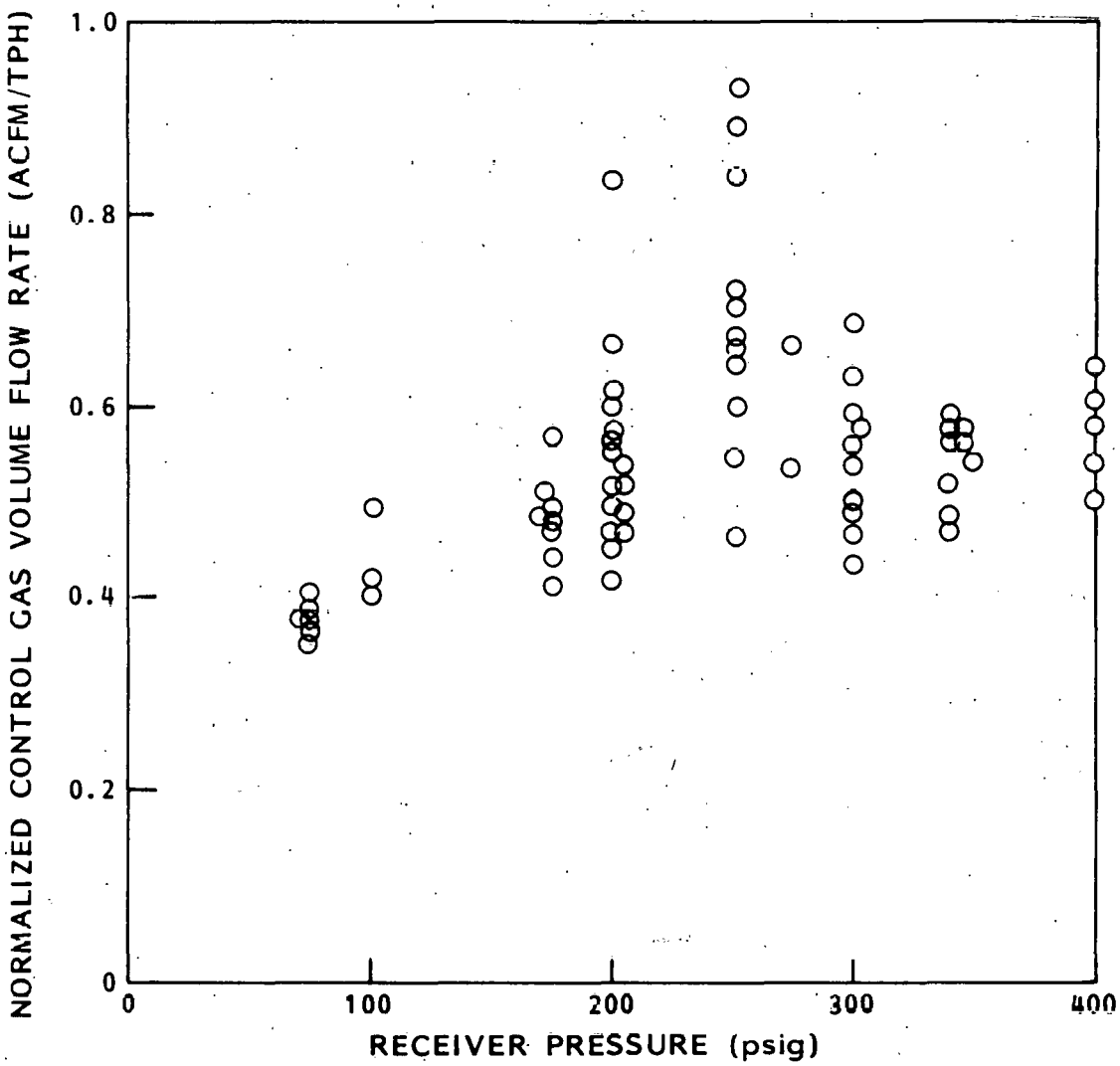

Fig. 4-12 Control Gas Flow Rate Data

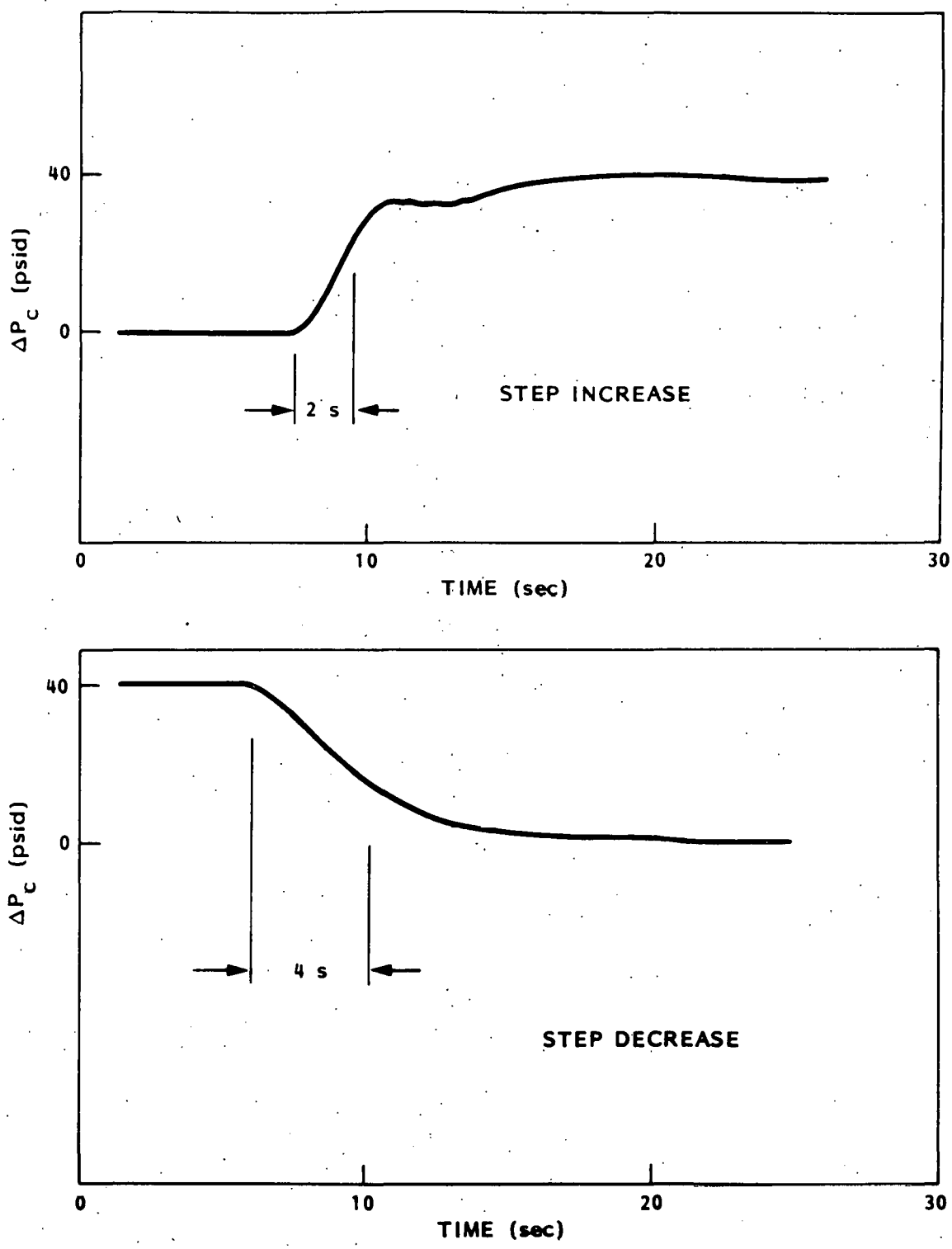

Fig. 4-13 System Response to Step Changes in Control Gas Differential Pressure

4.5.9 Special Testing

A number of special tests have been made which are of some importance for scale up or different modes of operation. These include tests of the L-valve type of sprue control nozzles, operation of the Kinetic Extruder in the "Pump" configuration - where the rotor casing is separate from the receiver vessel - and finally tests of some sprues with a much lower area ratio.

L-Valve Tests. The L-valve type of control nozzle has the potential to feed much larger particles than the existing nozzles. Preliminary tests were conducted with L-valves installed on the KE-6 rotor in order to determine the possibility of using this type of design.

Figure 4-14 shows a series of L-valve configurations that were tested. Versions (A) and (B) did not perform in a satisfactory manner. Version (A) gave very unequal flows between the different sprues and did not respond to the deplugger at all. Version (B) was better but responded poorly to the deplugger. Version (C) performed fairly well but still gave unequal flows according to the sprue detector display. In addition, the deplugger jet had now too large an impact on the flow, causing a negative pressure pulse to appear on the control gas pressure when the deplugger was pulsed.

Using the version (C) configuration, tests were run over a range in coal flows at pressures up to 200 psig. Results are shown in Fig. 4-15. As shown, response of the coal flow to the control gas pressure level is different than with the conventional nozzles. However, the delta pressures required are of the same order of magnitude. The major difference is in the flow rate of control gas required. Figure 4-16 shows the control gas flow rates observed with the L-valves in comparison to the other nozzles. As shown, the L-valve takes 1.5 to 2 times as much flow.

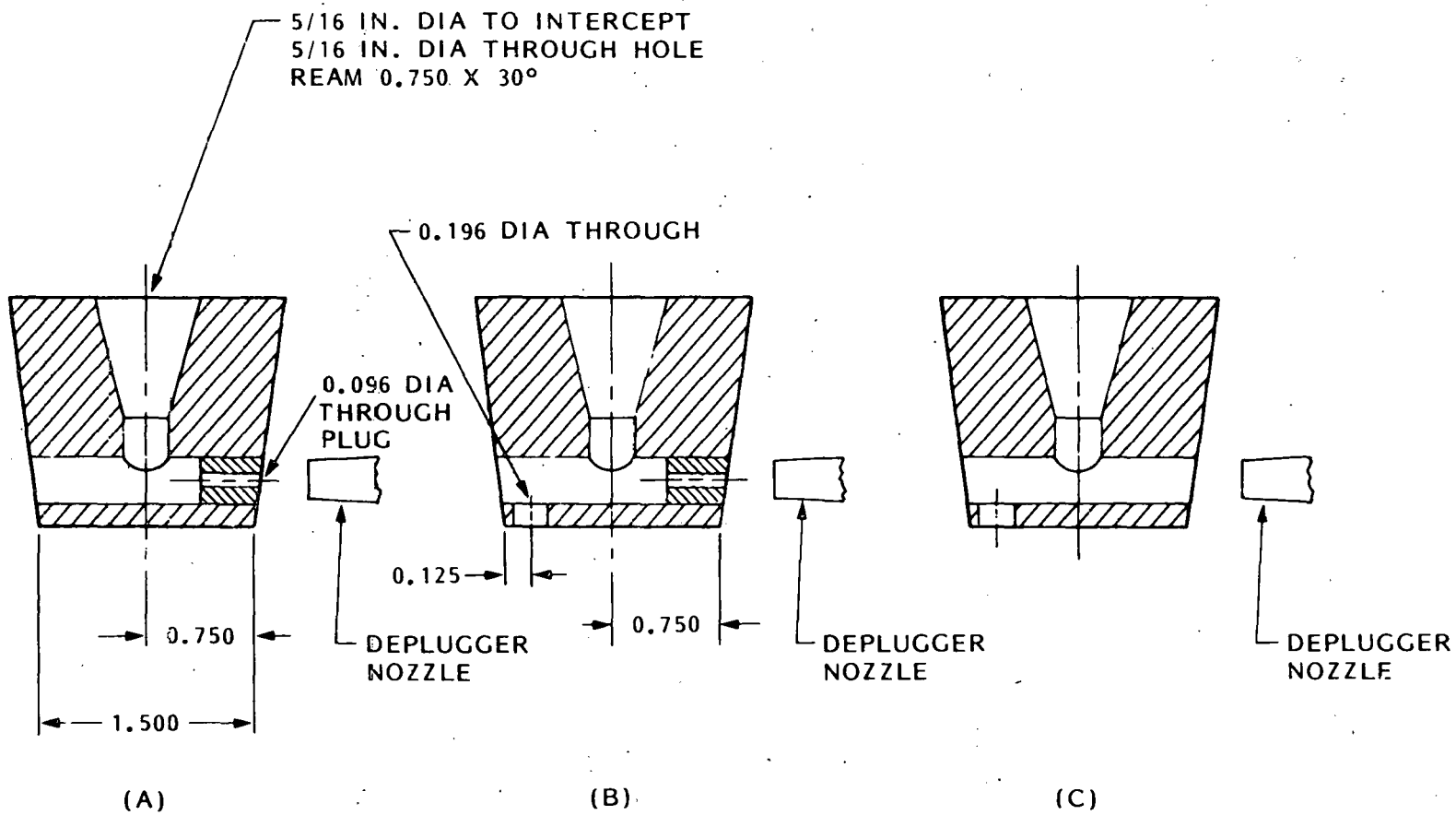

Fig. 4-14 L-Valve Configurations Tested

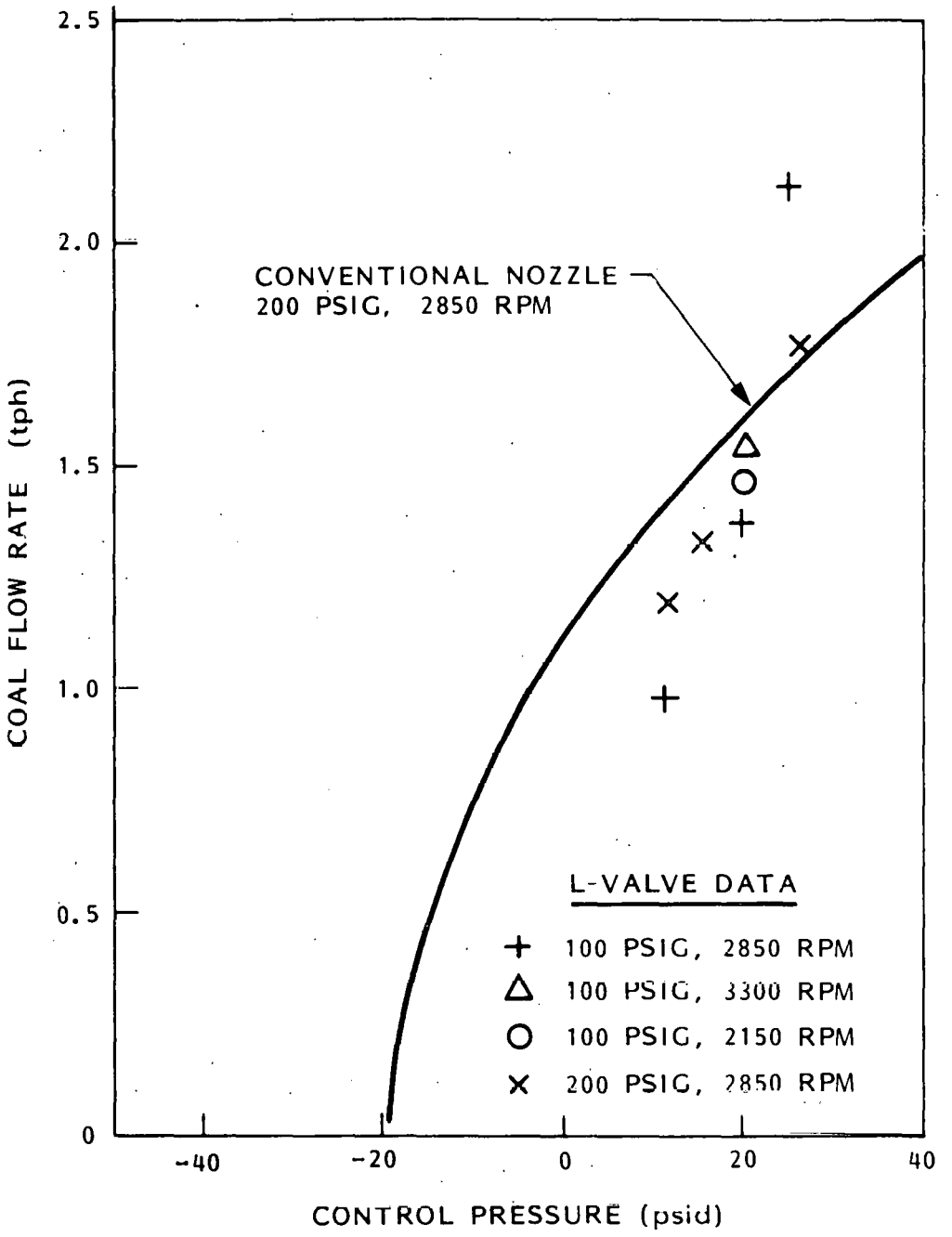

Fig. 4-15 L-Valve Response to Control Pressure Differential Setting

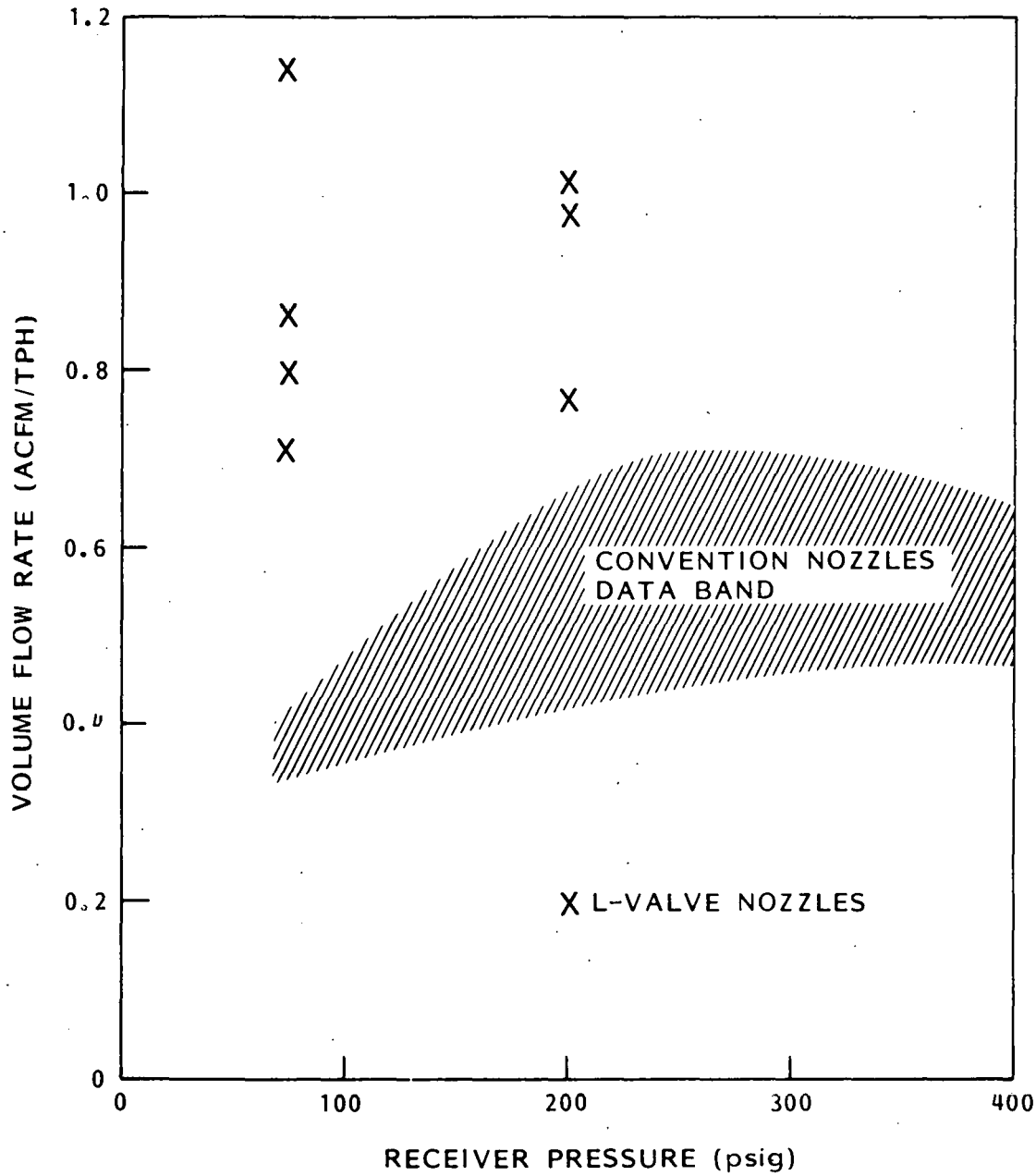

Fig. 4-16 L-Valve Control Gas Flow Data

The conclusion we would draw is that the used L-valve type nozzle is possible and appears to have both advantages and disadvantages relative to the current nozzles. Additional work will be needed to further evaluate and refine the L-valve, and to establish engineering data for design, optimization, and scale up.

"Pump" Configuration. In the "Pump" mode experiments, the rotor housing was isolated from the receiver hopper by means of a barrier plate, and the requisite piping was attached so that the pumped coal flowed from the casing to the receiver through a 3/4-in. by 30-ft long pipe. The general setup is shown in Fig. 4-17. Internal casing inserts were installed to convert the casing to a circular one with a 2.5-in. radial clearance from the rotor. Two tangential coal outlets, 0.75 by 1.625-in. cross section, originated at the casing corners and converged to a single 3/4-in. Sch 40 pipe which came out through the cover.

In the tests the transport gas flow rate was set at a fixed value and the coal flow varied, which produced varying densities in the transport line. In addition to the normal test data acquisition instrumentation, a differential pressure gage was installed to measure the pressure drop between the casing and the receive vessel. Also, a sampling tube was installed from which a suspension sample could be drawn from the case at a position midway between the rotor rim and the casing periphery. This was done in an effort to gain some knowledge of the distribution of coal within the gas vortex in the housing.

In general, the tests of the machine in this configuration were successful. Test conditions covered a range of coal flows from 1 to 2 tons/hr, transport pipe coal densities of 6-2 lb/ft^3 (as determined by material balances), and rotor speeds of both 2850 and 3500 rpm. Piping pressure drops between the case and the receiver varied between 4 and 10 psi, depending on the coal density. Velocity in the piping was 20 to 25 ft/s. Significantly, coal densities in the suspension within the casing was determined by sampling were low compared to the piping densities. The maximum sampled density obtained

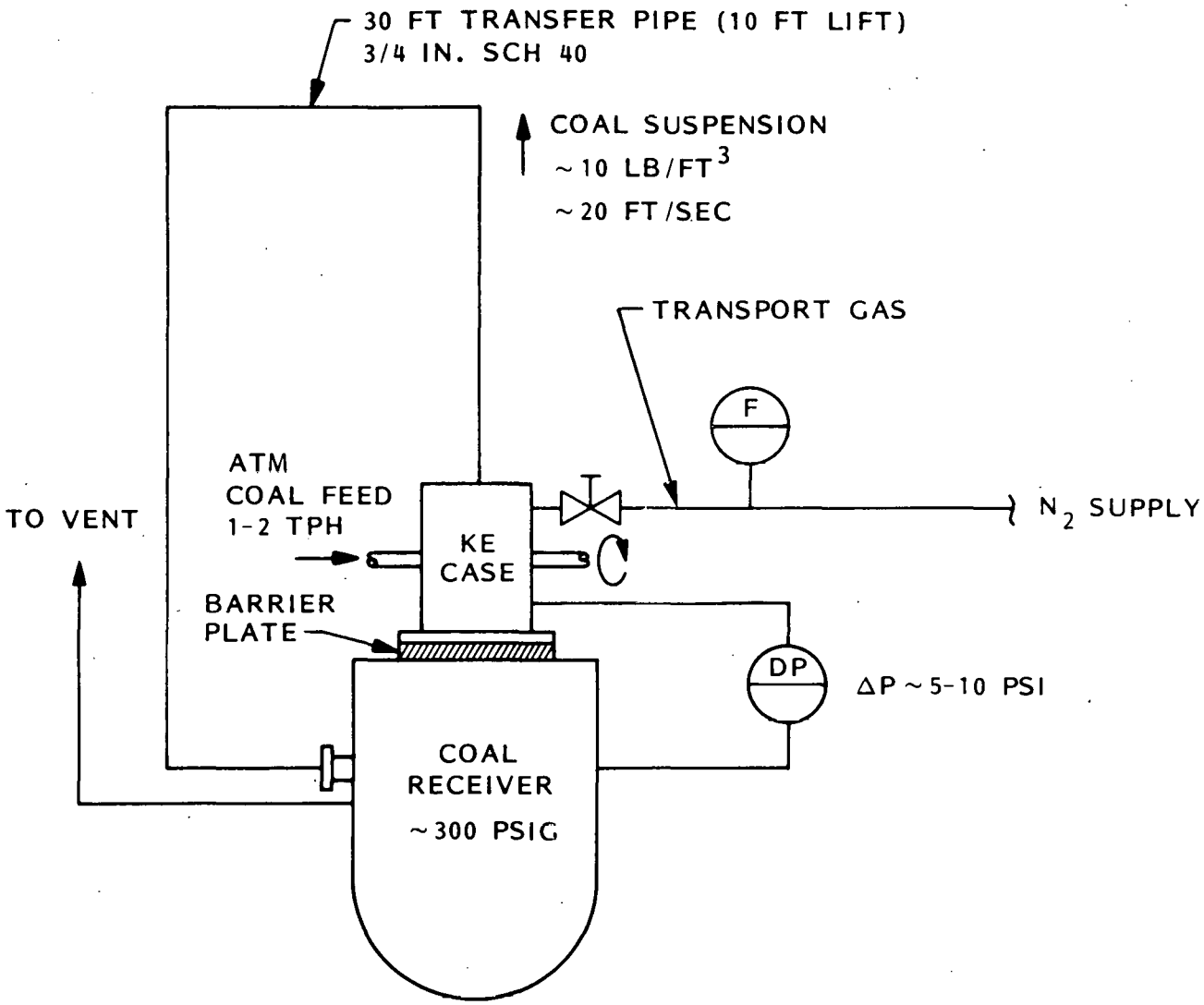

Fig. 4-17 Kinetic Extruder "Pump" Test Setup

was only 0.1 lb/ft^3. This may be attributed to a strong radial gradient in coal density inside the casing due to centrifugal action.

We feel that these preliminary tests have demonstrated the posssibility of the "pump" concept; several casing modifications are required before plant use. First of all, there is the matter of the start-up transient. It is not possible to start coal flow through the rotor except at atmospheric pressure. In our tests the casing and coal receiver was pressurized together but this is not feasible for direct reactor injection. One may consider isolating the housing with a valve in the discharge pipe, starting the coal flow through the rotor, pressurizing the case rapidly, and then opening the valve to the reactor. Computations of the ratio of throughput to the available hold-up volume in the casing lead one to the conclusion that such rapid case pressurization rates are needed as to be impractical, especially in the larger throughput sizes. Furthermore, upon opening the valve to the reactor, an initial high rate surge of coal would occur which would not be tolerable by the reactor in most cases.

The system needed to cope with the start-up transient is a letdown system to recycle the delivered coal back to the feed hopper during casing pressurization.

The inserts that convert the housing to a circular internal shape were fabricated from aluminum to reduce cost and were not intended to be durable. These aluminum parts are showing some signs of erosion opposite to the rotor rim and on the sharp edged outlet cutwater. Based on these observations, we would increase the housing clearance and modify the outlet geometry.

Since the coal receiver is no longer an integral part of the housing it does no longer act as a heat sink during the heat up transient. The housing, therefore, heats-up much faster than previously observed.

Low Area Ratio Sprue Tests. The present KE-6 sprues have an area ratio (inlet/outlet) of 45 as a consequence of the rather large funnel entrance area necessary to fill the spin-up zone. Scaling up to higher throughputs requires, other factors being equal, an increase in sprue outlet area in proportion to coal flow rate. Our design studies show that better designs would result if the inlet area is not increased quite so much, resulting in lower area ratios. Area ratios in the 10 to 20 range allow 50 tph units of the single tier type. Based on extrapolation, such sprues are believed to be stable, but this had not been verified experimentally. In addition, we note that as the sprue wears, the area ratio is decreased. The useful life of sprue parts thus may depend on the allowable change in area ratio.

Accordingly, tests were performed to confirm that such lower area ratio sprues will operate stably. To accomplish this, two of the twelve funnels in the rotor were replaced with the funnel section shown in Fig. 4-18. This gave an overall (funnel inlet/sprue body outlet) area ratio of only 8 for these two sprue channels. Tests were then conducted with this configuration to determine if the altered sprues gave any change in overall performance.

Generally, thw low area ratio sprues were found to give a rather similar performance to that obtained previously. A range of throughputs were run at pressures of 200 and 300 psig yielding operating curves which were the same as before. Rotor speeds required for stable operation at a given pressure appeared to be slightly higher with the new sprues. Previously, a speed of 2850 rpm was sufficient for reliable operation at 200 psig, and 3300 rpm for 300 psig. Attempts to operate at these conditions yielded occasional flow upsets with the new configuration. However, slightly higher speeds (3000 and 3600 rpm) yielded stable operation. Overall, we would conclude that the area ratio 8 sprues are slightly less stable than the large area ratio (45) designs.

The computer program developed for sprue design of presently assumes that the permeability of the coal remains constant as the coal passes through the sprue and does not vary as the coal flow through the sprue changes. Test results

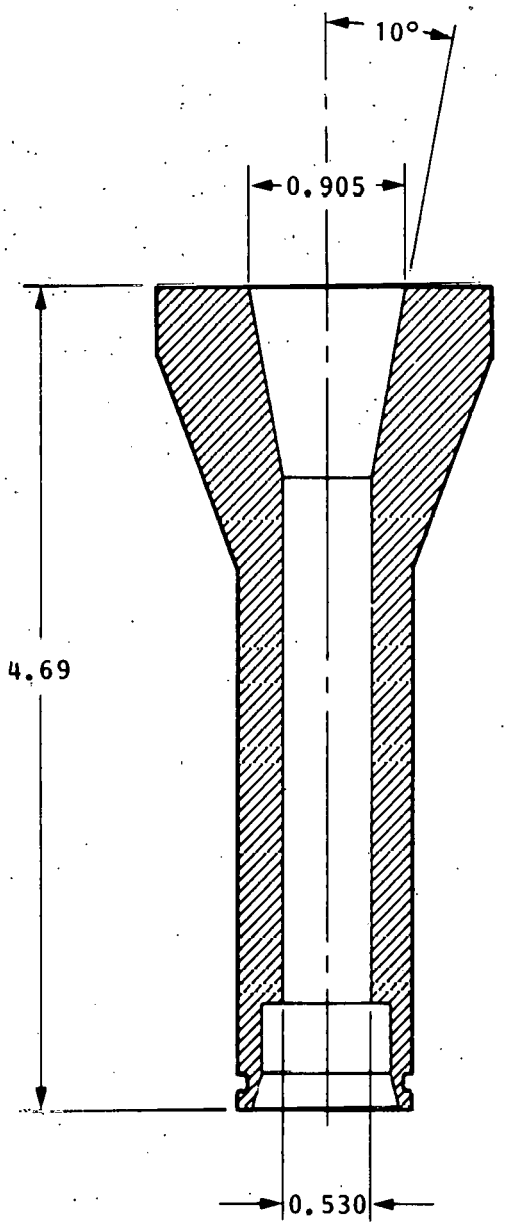

Fig. 4-18 Funnel for Low Area Ratio (8) Sprue Channel

obtained during the course of the present program indicate that the program should be refined to permit the coal permeability to change as coal traverses the sprue. This will bring calculations in closer agreement with test data, lead to better sprue designs, and lower power consumption. Such an effort should be included in future development work.

Rotor Interference. After completion of the special testing described above, the Kinetic Extruder was reassembled in the standard test configuration and readied for testing. A routine test run of about 1-1/2-h duration was performed. During shutdown from this test run, a mechanical problem manifested itself.

The machine was in the process of being shutdown; the case was at atmospheric pressure, the coal flow was shutoff, and the rotor speed had been slowed to about 500 rpm when the rotor decelerated rapidly and came to a full stop. The shaft torque went to a negative 200 ft-lb, indicating probable mechanical rubbing between parts. After shutdown it was found that the rotor could be turned by hand, with some resistance, when the seals were de-energized but could not be turned when the seals are pressurized.

Upon disassembly, fresh scoring marks were found on the feed side shaft and on the opposing end face of the Seal No. 1 cartridge as indicated in Fig. 4-19. The marks extended around 360 deg but were limited to the inner fourth of the cartridge face. Rubbing between parts unquestionably caused the observed problem, but no readily identifiable cause for the loss of clearance between these parts has been identified.

Seal cartridges No. 1 and No. 3 were removed from the machine and sent to the vendor where they were disassembled and found to be in excellent condition. There were no broken retainers or anything else that could have caused cartriged movement.

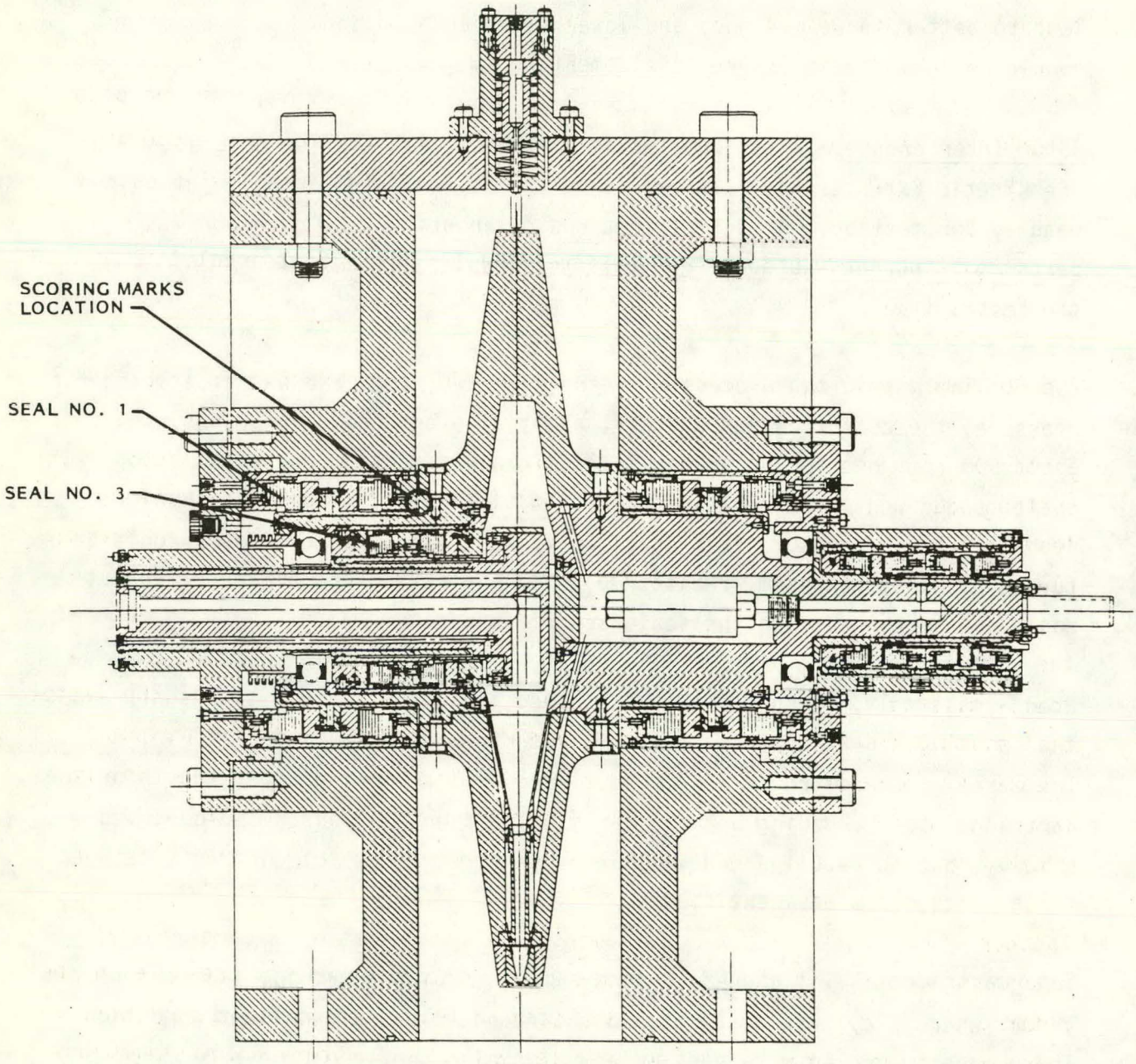

Fig. 4-19 Location of Scoring Marks

We must attribute the loss of clearance to a combination of possible factors: insufficient clearance in the assembly, worn rotor attachment shoulder bolts from repeated assembly/disassembly, lack of casing pressure, and differential thermal expansion between rotating parts and the casing.

To alleviate the problem, we installed a shim under the drive side end plate so that the rotor is "centered" in the casing and also removed 0.060 in. from the fed side shaft, which will eliminate the chance of contact.

The machine has been reassembled and operated in the standard test configuration for about 1-1/2 h and no unusual behavior was observed.

4.5.10 Equipment Malfunctions

Suction System. During initial operation, a minor problem occurred with the suction system. Rotor eye vacuum was lost due to saltation in the piping leading from the Kinetic Extruder to the suction system. This led to eventual plugging of the line. The two parallel 3/4-in. suction lines were replaced with a single 1-in. line. Additional changes in piping were made to reduce the length and eliminate restrictions in the three 1/2-in. hoses which join the 1-in. suction pipe to the KE feed pipe suction ports. Also, in the latter part of the program, a stiffer spring was installed in the blower vacuum breaker which reduced the suction system baghouse pressure from -7 in. Hg to -10 in. Hg, its design value. These changes have eliminated this problem.

Another minor suction-related phenomenon was occasional (~3 times/hour), transient (~1 s duration), pressure pulses up to atmospheric pressure in the rotor eye due to a brief loss in eye suction. These pulses were too short to cause any feeding problem but represented a nagging mystery. Investigation eventually showed that these pulses were associated with drawing a slug of coal out from the rotor eye through the suction channels. When the machine was disassembled for inspection at 217 hours, minor changes were made in the

feed pipe coal outlet wear plate and in the suction channel inlets. Subsequent testing showed these changes eliminated the eye-pressure pulse phenomenon.

Nozzle Deposits. A nuisance observed during initial operation, apparently caused by the fact that we recycle the coal, has been a gradual feed rate decrease that starts after about 10 hours of testing. In one case, after 20 hours, the feed rate dropped to about 0.9 tph from an initial rate of 1.3 tph. When fresh coal is loaded into the test loop, the feed rate returns to the original value within a short time. The observed behavior has been traced to a gradual formation of a thin coating in the throat of the control nozzle that restricts the coal flow. The coating does not start to form when new coal is in the test loop and the scouring action of the new coal apparently removes any coating already present. As the coal is recycled, the particles abrade and the scouring action diminishes. Eventually, the coating starts to form again. In the latter two-thirds of the test program we made it a practice to replace at least 50 percent of coal inventory about every 8 hours of test time. No further signs of the coating appeared thereafter.

The four titanium carbide nozzles had a poorer surface finish and proved to be more susceptible to this coating deposition than the other nozzles. After 20 hours they were replaced with four spare tungsten carbide nozzles. In hindsight, this change was probably unnecessary.

The mechanism of coating should not be of any concern in a plant operation where the feedstock is not recycled repeatedly in a closed loop.

Diesel Engine Coupling. The coupling between the diesel engine and the variable displacement hydraulic pump that furnishes hydraulic power to the drive motor of the Kinetic Extruder failed in July. This coupling has been in use for 5 years and was unable to cope with engine vibrations. A different type coupling was ordered but was not received and installed until the latter part of the program. In the interim, repairs were made to the failed coupling to permit continuation of testing.

The present diesel engine and hydraulic drive would be replaced with an electric motor drive in a plant application of the Kinetic Extruder.

Torque Meter. The electronic module converting the torque meter signal to torque readings malfunctioned and had to be replaced.

Belt Drive. The belt drive system malfunctioned in August at 213.4 hours of coal pumping. Unusual noise and vibration was observed and the unit was stopped. The pillow block holding the drive shaft end of the belt drive had loosened. This caused misalignment of the torque meter. The torque meter was disconnected and all bolts were tightened and shaft alignments checked. An 8-mil run-out was measured at the Kinetic Extruder shaft. The torque meter appeared undamaged.

Diesel Engine Power Takeoff. At 217 hours of coal pumping, the tests were stopped to make permanent repairs to the Diesel Engine Drive.

A new "softer" coupling and a new pump were installed. The Kinetic Extruder was brought to 1,000 rpm when excessive wobbling of the coupling flange on the diesel engine was observed. The engine was stopped. A new clutch pilot bearing was installed in the power takeoff unit. The diesel engine was started and the hydraulic power actuated but the Kinetic Extruder could not rotate even with an indicated 52 ft-lb of torque applied to it.

It was decided to disassemble the machine and the seals with the help of the seal manufacturer's representative. The findings are reported in Section 4.5.4

Section 5
TECHNICAL EVALUATION OF FEEDER

The feeder has performed flawlessly. Operation is very smooth and coal flow rates are steady. There is no doubt that the rotor meters coal more accurately than any metering auger now in use. Changes in the demand flow rate are easy to achieve and response is very rapid.

Wear rates for components indicate replacement rates of 1 year for control nozzles, 2 to 3 years for the sprue bodies, and 6 years for the funnels.

The grease lubricated bearings should have a life between lubrication of 8000 hours. The seals should only require replacement of the elastomeric O-rings when their useful life expires.

Review of the design details for potential installation in a pilot plant has indicated some areas for potential improvement. These potential improvements include:

Increase in turndown ratio. The maximum flow through the machine is limited by the capacity of the feed pipe to 2-1/4 tph. The lower limit is established by the unaugmented coal flow through the control nozzle. At full speed of 3600 rpm the flow rate is about 0.9 tph. This yields a throttling range of 2.5 to 1. By using a slightly smaller nozzle the unaugmented flow rate can be lowered to 0.75 tph and a throttling range of 3 to 1 can be achieved if required.

Decrease potential machine sensitivity to temperature extremes and temperature gradients. The present machine uses 304 stainless steel for the end plates and shafts. The coefficient of thermal expansion of this material is about 1.5 times larger than the ball bearing race material.

Thus, as the temperature of the machine is changed from room temperature, the fit between parts will change and under certain temperature conditions this change in geometry may exceed the internal clearance of the ball bearing and thereby damage the bearing.

To reduce temperature gradients and heat buildup in the bearing, a good heat path to the ambient should be provided. The heat transfer especially from the feed side bearing could be improved by the use of a material having better heat conduction, and by increasing the cross section along the heat transfer path. For these reasons it is recommended that new parts be installed.

Decrease potential machine sensitivity to bearing misalignment. The feed side bearing slips on the inner race over the stationary shaft on the end plate. This feature was incorporated in the design to accommodate the 30 mils expansion of the housing when pressurized to 400 psi. The sliding inner race surface has a length to diameter ratio of less than 1 to 3. To avoid any potential binding it would be desirable to increase this ratio to 1 to 1 or larger. This implies the use of a sliding sleeve. To permit the use of a sleeve and at the same time increase the heat transfer potential by increasing the cross sectional area of the stationary shaft requires redesign of the feed tube. A redesign of the feed tube should include relocation of the suction tube connections to clean up the interface with the suction system.

An alternate design could eliminate the need to slip between the inner race and the stationary shaft, by using a cylindrical roller bearing. The required slippings is accommodated by the bearing proper. Such a design could require special grease seals to keep the grease in the bearing.

Change in Bearing Grease. Test results have indicated that readily available factory lubricated shielded bearings are unsatisfactory for our use. The grease is too soft and it degrades mechanically. The oil separates and is driven past the shields away from the bearings. It is recommended that shielded bearings be replaced with unshielded bearings, paded with stiffer grease and specially designed grease shields be installed to keep the grease in the vicinity of the bearings.

Improve operational flexibility. The present machine transfers the feedstock from the housing into a large collection hopper, attached under the housing, with a 7 x 24 in. rectangle transfer port. To transfer the coal from the collection hopper into a transfer pipe, a zone fluidization scheme is used. We propose to use a housing with a circular cross section, concentric with the rotor and providing a constant 3 in. clearance between rotor and housing wall. The coal could be metered into the housing by the rotor and swept directly into the transfer pipe by the transport gas. The feasibility of such a scheme has been demonstrated with coal densities in the transfer pipe ranging from 8 to 12 lb/ft^3. Velocities in the transfer pipe range from 20 to 25 feet per second.

Improved drive system. The present drive system consists of a belt and pulley speed increaser, a variable speed hydrostatic drive (pump and motor), and a diesel engine to power the pump. The efficiency is low (50Δ), the power train is noisy, and the engine needs much attention. A constant speed directly coupled electric motor is recommended.

Suction system safety. The present machine uses nitrogen gas for all gas supply. If syngas is used for some or most gas supplies the potential fire hazard needs to be reviewed with emphasis on the suction system.

For large commercial machines built to last 25 to 30 years, the following should be considered:

Horizontally split housing. This permits the rotor to be assembled to the shafts before installation. A more durable interface design can be utilized and good access to the control nozzles can still be readily provided for maintenance.

Oil lubricated journal bearings. Feedstock supplied directly from the grinder and dryer will have a temperature of about 250°F. Thus the housing temperature will reach about 350°F in steady state. Such an environment will require a cooling system for the bearings. Larger bearing diameters and

speeds associated with commercial machines will rule out ball and roller bearings. Oil lubricated journal bearings should be considered. The circulating oil system will provide the required cooling.

Nozzle block retention system. The bolts attaching the nozzle block to the rotor are subject to load cycling and fatigue. For commercial units a different attachment system should be devised. Such a change can be made without impeding ease of maintenance if coupled with the changeover to a horizontally-split housing as discussed above.

Location of high-pressure receiver. If a high-pressure receiving hopper is to be used, it should be decoupled from the feeder housing. The coal will be transferred from the feeder housing into the receiver hopper by the self-pumping action of the rotor. Such an equipment arrangement will ease the interface problem between an efficient hopper design and the feeder housing, and will permit locating the feeder at ground level.

If desired the transport gas used to inject the coal into the reactor can be swept directly through the feeder housing, eliminating the need for the high-pressure receiving hopper. A let-down loop may be required, in this case, to handle startup and shutdown transients.

Section 6
SPARE PARTS LIST

The following list shows the items which are subject to wear and may need replacing, and the address of the original supplier.

1. Funnels

Castings:	Kitchenetics 1450 Dell Avenue Campbell, CA 95008
Machining:	Delta Fabricators 14325 S. Figueroa Gardena, CA 90248

2. Sprue Bodies

Titanium Carbide:	Alloy Technology International, Inc. c/o Western Technical Sales 2363 Boulevard Circle Walnut Creek, CA 94595

3. Control Nozzles

Silicon Carbide:	Pure Carbon Company 441 Hall Avenue St. Mary's, PA 15857
Tungsten Carbide:	Kennametal, Inc. Latrobe, PA 15650

4. Seals — Crane Packing Company
6400 Oakton Street
Morton Grove, IL 60053

5. Bearings — FAG Bearings Corporation
Hamilton Avenue
Stamford, CT 06904

Section 7
REFERENCES

1. "Development of a Pilot-Scale Kinetic Extruder Feeder System and Test Program," Phase I Report, DOE Order No. DE82009954, Mar 1982, Contract No. DE-AC21-80MC-14602

2. K. J. Bhansali, and W. L. Silence, "Metallurgical Factors Affecting Wear Resistance of Metals," Metal Progress, Nov 1977, pp. 39-43

3. J. W. Meyer, "A Channel Flow Analysis for Porous Beds Moving Under High g-Forces," AIChE J., Vol. 26, No. 3, May 1980, pp. 363-371; see also Appendix C, Coal Feeder Dev. Prog. Phase III, Report FE-1792-61, Sep 1979

Appendix A

DETAILS OF THE KINETIC EXTRUDER MODEL NO. 6

This appendix contains all drawings of parts and assemblies used for the manufacturing of the Model No. 6 feeder. Figure A-1 shows the drawing breakdown structure. All drawings called out in Fig. A-1 are included herein.

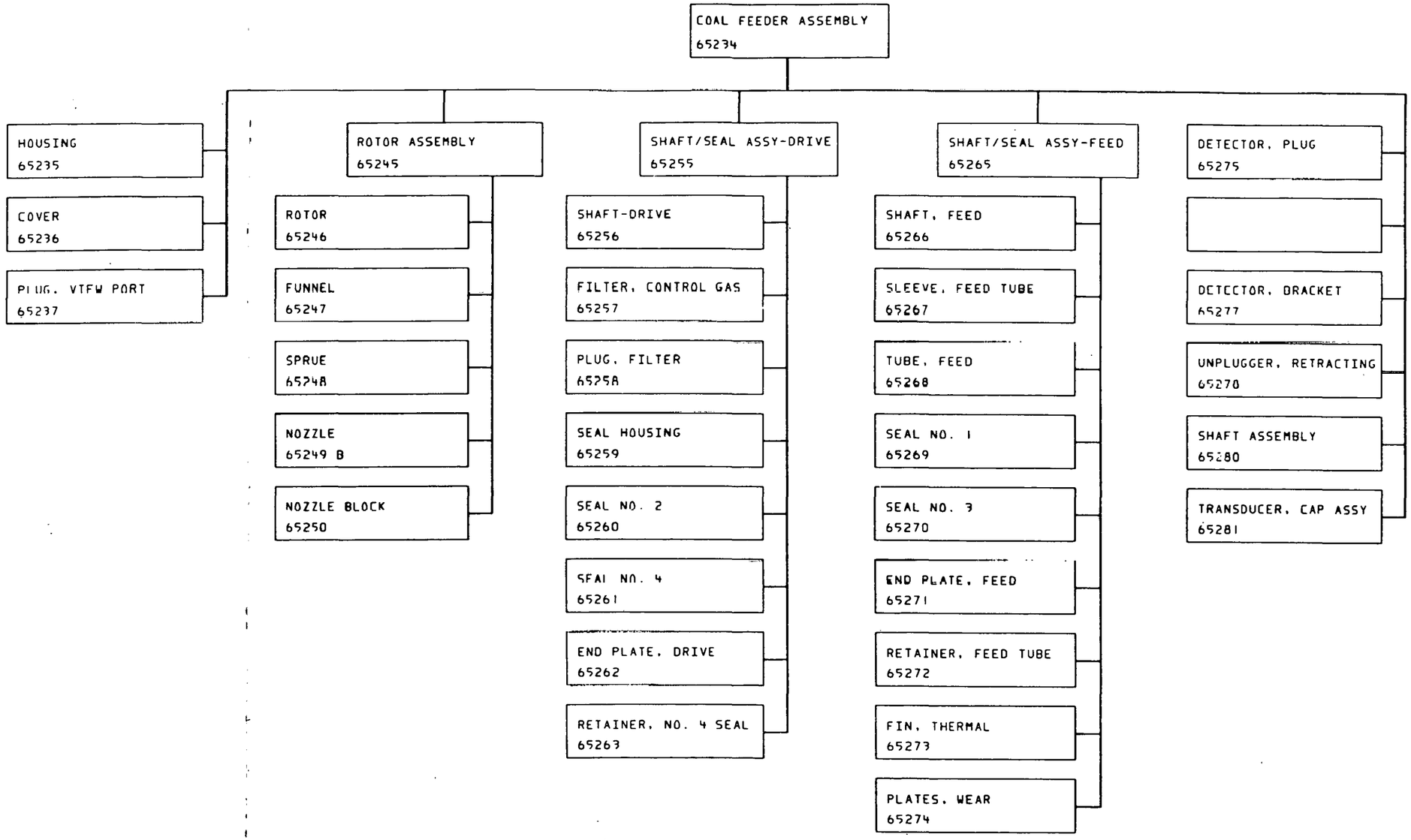

REVISIONS

ZONE	REV	DESCRIPTION	DATE	APVD

QTY REQD	CODE IDENT	PART OR IDENTIFYING NO	NOMENCLATURE OR DESCRIPTION	MATERIAL DESCRIPTION OR NOTE	MATERIAL SPECIFICATION	ZONE	ITEM NO.

PARTS LIST

PREPARED FOR
DEPARTMENT OF ENERGY

UNLESS OTHERWISE SPECIFIED DIM. ARE IN INCHES. TOLERANCES ON: FRACTIONS ± 1/16 DECIMALS: .X ± .1, .XX ± .03, .XXX ± .010 ANGLES ± 2 DEG.

REF
NEXT ASSY | USED ON
APPLICATION

CONTR DE-AC01-82MC19299
KCA/CEE

DATE 24 OCT 82
DWN R.W. ALLEN
APVD
APVD
ENGRG A.D. DANIEL
CHKR
APVD J.W. MEYER
APVD J.H. BONIN

LOCKHEED MISSILES & SPACE COMPANY, INC.
SUNNYVALE, CALIFORNIA

DRAWING TREE

K. E. MODEL 6

SIZE E | FSCM NO. 17077 | DRAWING NO. 65233 | REV
SCALE 1:1 | SH 1 OF 1

A-2

MSDD.81-33E
11-18-83

STDLIB

SK 65233.01.01
9051E...

ALLEN$COAL FEEDER, DRAWING TREE

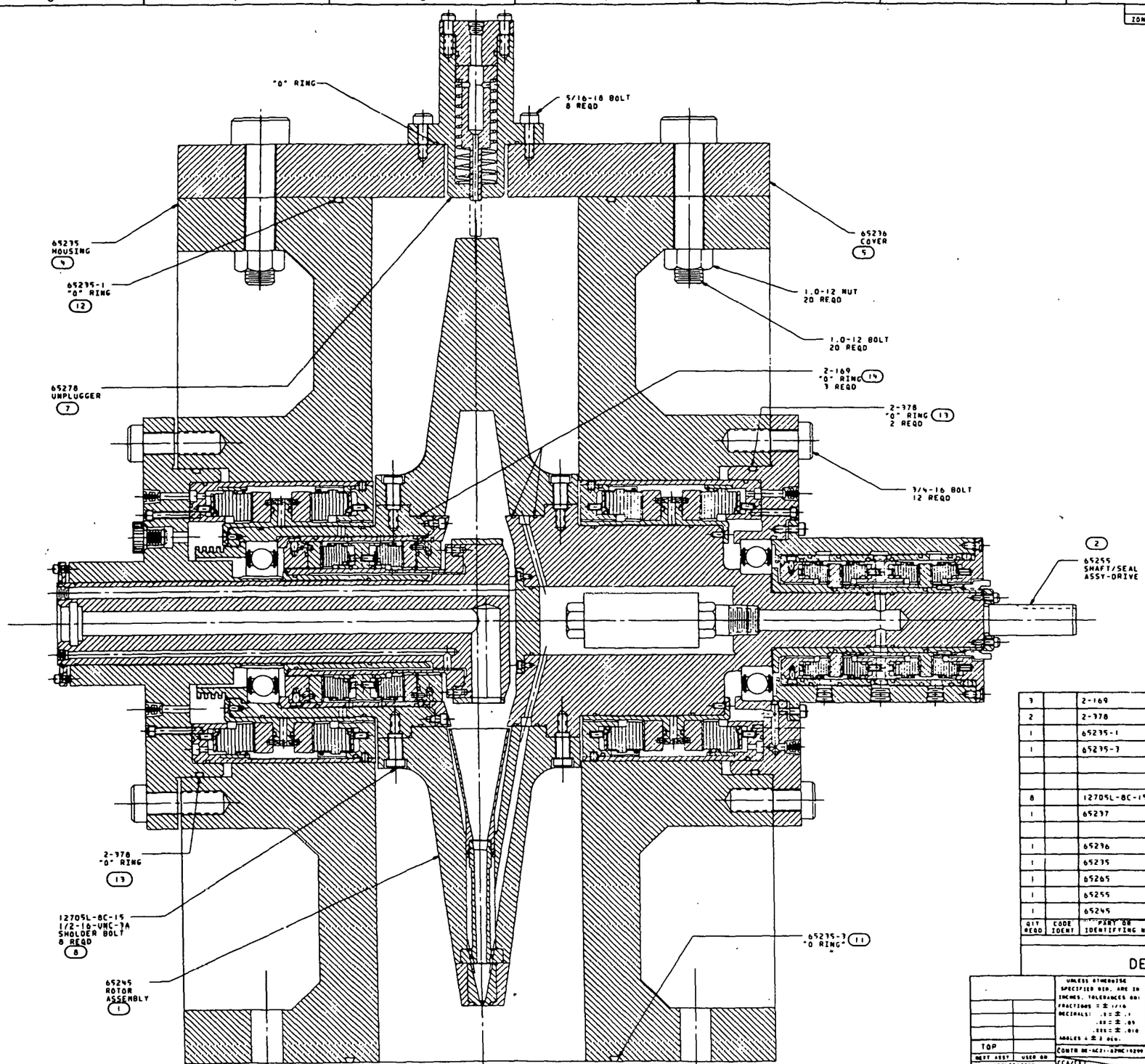

QTY REQD	CODE IDENT	PART OR IDENTIFYING NO	NOMENCLATURE OR DESCRIPTION	MATERIAL DESCRIPTION OR SIZE	MATERIAL SPECIFICATION	ZONE	ITEM NO.
3		2-169	"O" RING	BUNA-N			14
2		2-378	"O" RING				13
1		65235-1	"O" RING				12
1		65235-7	"O" RING				11
							10
			SOCKET HEAD CAP SCREW	1/2-16 UNC-3A	UNBRAKO		9
8		12705L-8C-15	SHOLDER BOLT				8
1		65237	PLUG,VIEW PORT				7
							6
1		65236	COVER				5
1		65235	HOUSING				4
1		65265	SHAFT/SEAL ASSY-FEED				3
1		65255	SHAFT/SEAL ASSY-DRIVE				2
1		65245	ROTOR ASSEMBLY				1

PARTS LIST

PREPARED FOR
DEPARTMENT OF ENERGY

UNLESS OTHERWISE SPECIFIED DIM. ARE IN INCHES. TOLERANCES ON: FRACTIONS = ± 1/16 DECIMALS: .X = ± .1 .XX = ± .03 .XXX = ± .010 ANGLES ± ± 2 DEG.

TOP
NEXT ASSY USED ON
APPLICATION

CONTR DE-AC21-82MC19299
CCA/LLT

DATE 8 JAN 83
DWN D.W. ALLEN
APVD
APVD
ENGRG A.D. DANIEL
CHKR
APVD J.W. REYER
APVD J.H. BONIN

LOCKHEED MISSILES & SPACE COMPANY, INC.
SUNNYVALE, CALIFORNIA

COAL FEEDER
ASSEMBLY
K. E. MODEL 6

SIZE E | FSCM NO. 17077 | DRAWING NO. 65234 | REV
SCALE 1:1 | SH 1 OF 2

REVISIONS

ZONE	REV	DESCRIPTION	DATE	APVD

MSDD:81-33E
12-15-83

STDLIB

SK 65234.01..05
905IE...

SK 65234.01..01
SK 65234.01..02
SK 65234.01..03
SK 65234.01..04

ALLEN$COAL FEEDER. ASSEMBLY

A-3

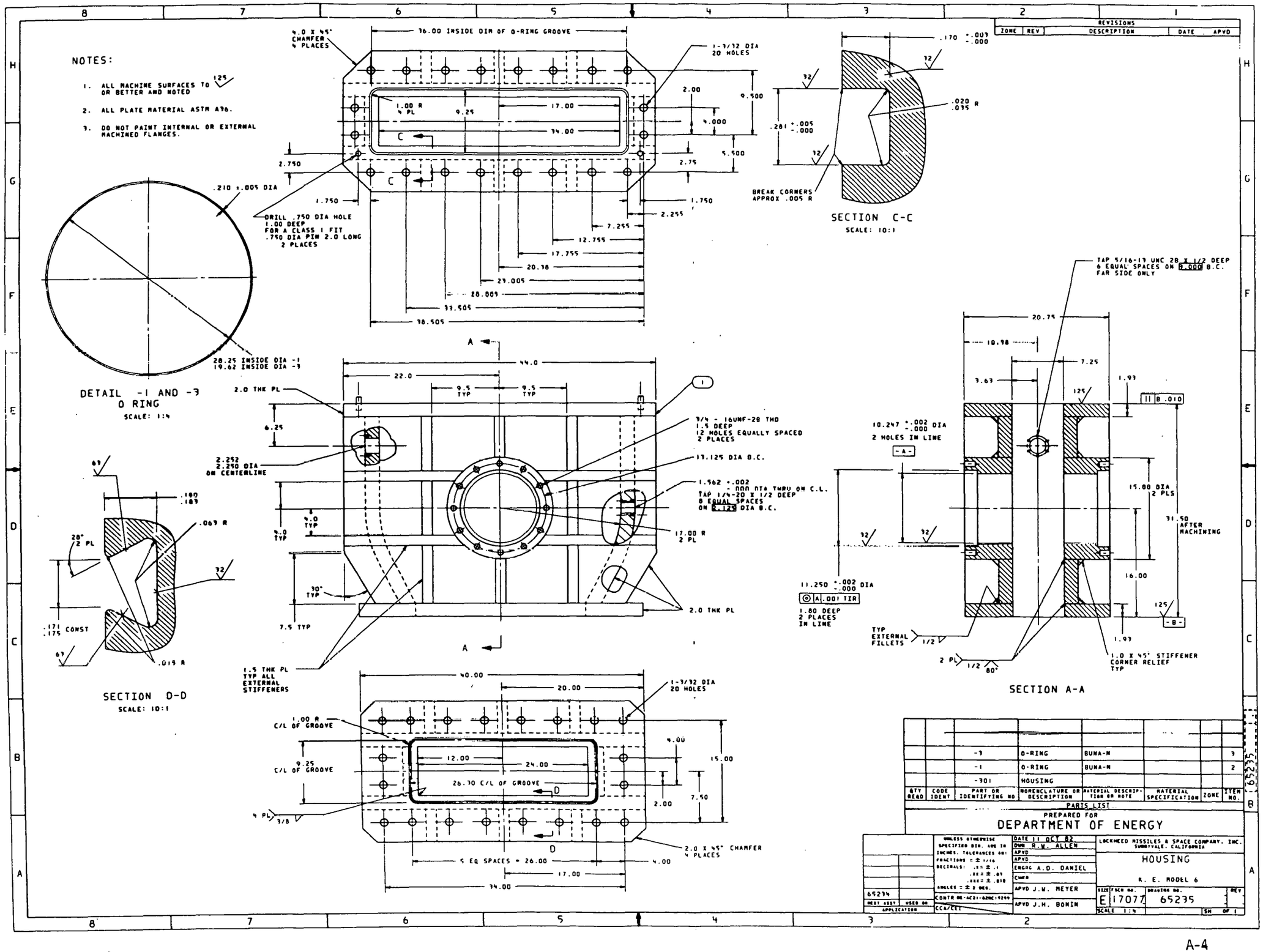

3

MSDD.81-33E
11-18-83

STCLIB

SK 65235,01,01
9051E,,,

ALLEN$COAL FEEDER, HOUSING

REVISIONS				
ZONE	REV	DESCRIPTION	DATE	APVD

NOTES:

1. ALL MACHINE SURFACES TO 125 OR BETTER AND NOTED
2. ALL PLATE MATERIAL ASTM A36.
3. DO NOT PAINT INTERNAL OR EXTERNAL MACHINED FLANGES.

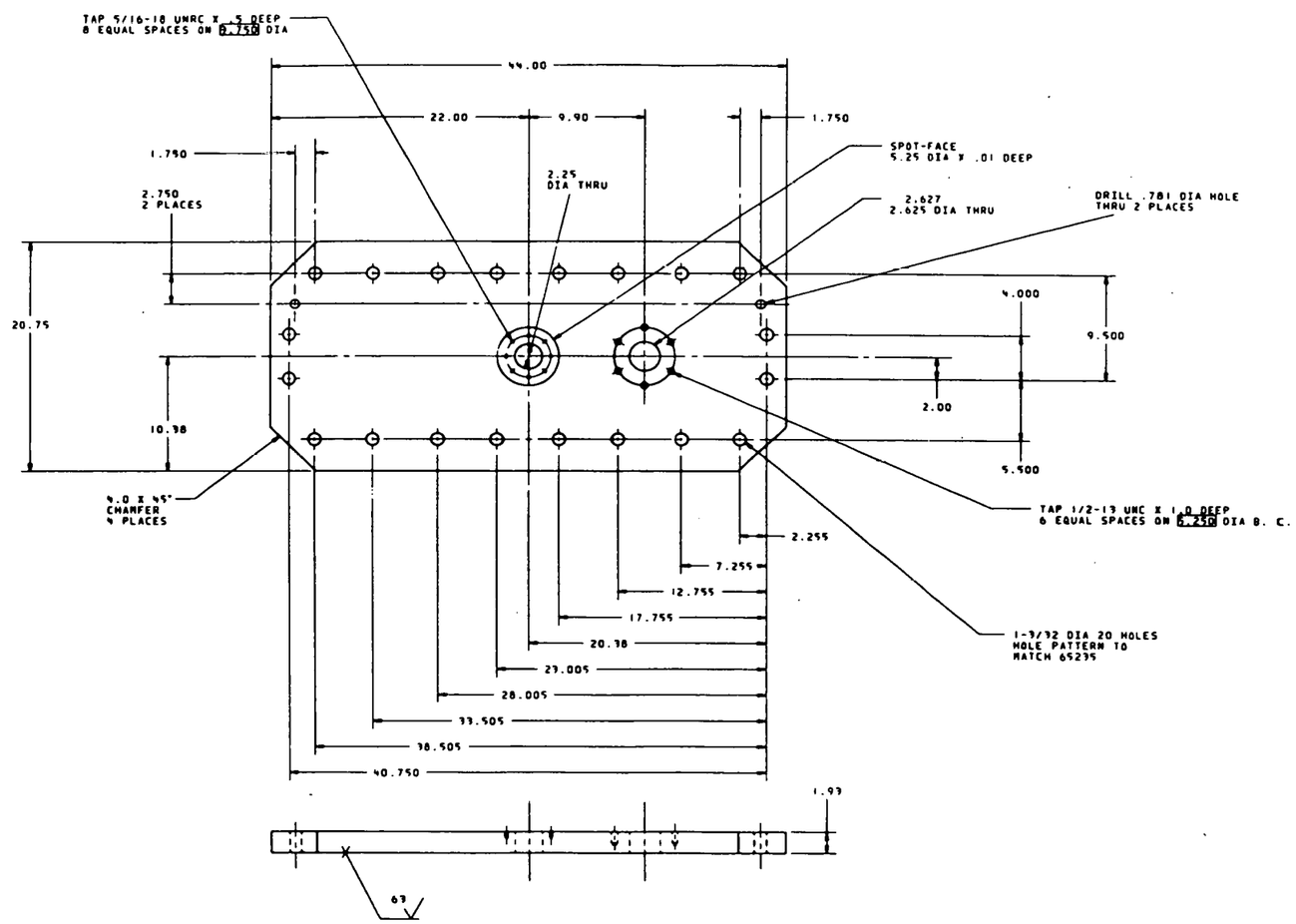

-1 COVER

QTY REQD	CODE IDENT	PART OR IDENTIFYING NO	NOMENCLATURE OR DESCRIPTION	MATERIAL DESCRIPTION OR NOTE	MATERIAL SPECIFICATION	ZONE	ITEM NO.
		-1	COVER	2.00 PLT	ASTM A36 STL		1

PARTS LIST

PREPARED FOR
DEPARTMENT OF ENERGY

UNLESS OTHERWISE SPECIFIED DIM. ARE IN INCHES. TOLERANCES ON: FRACTIONS = ± 1/16 DECIMALS: .X = ± .1 .XX = ± .03 .XXX = ± .010 ANGLES = ± 2 DEG.

65234
NEXT ASSY | USED ON
APPLICATION

CONTR DE-AC21-82MC19299
CCA/CCS

DATE 11 OCT 82
DWN R.W. ALLEN
APVD
APVD
ENGRG A.D. DANIEL
CHKR
APVD J.W. MEYER
APVD J.W. BOMIN

LOCKHEED MISSILES & SPACE COMPANY, INC.
SUNNYVALE, CALIFORNIA

COVER

K. E. MODEL 6

SIZE E | FSCM NO. 17077 | DRAWING NO. 65236 | REV

SCALE NONE | SH OF 1

65236

A-5

4

MSDD.81-33E
11-18-83

STDLIB

SK 65236.01.01
9051E...

ALLENSCOAL FEEDER, COVER

REVISIONS				
ZONE	REV	DESCRIPTION	DATE	APVD

NOTES:

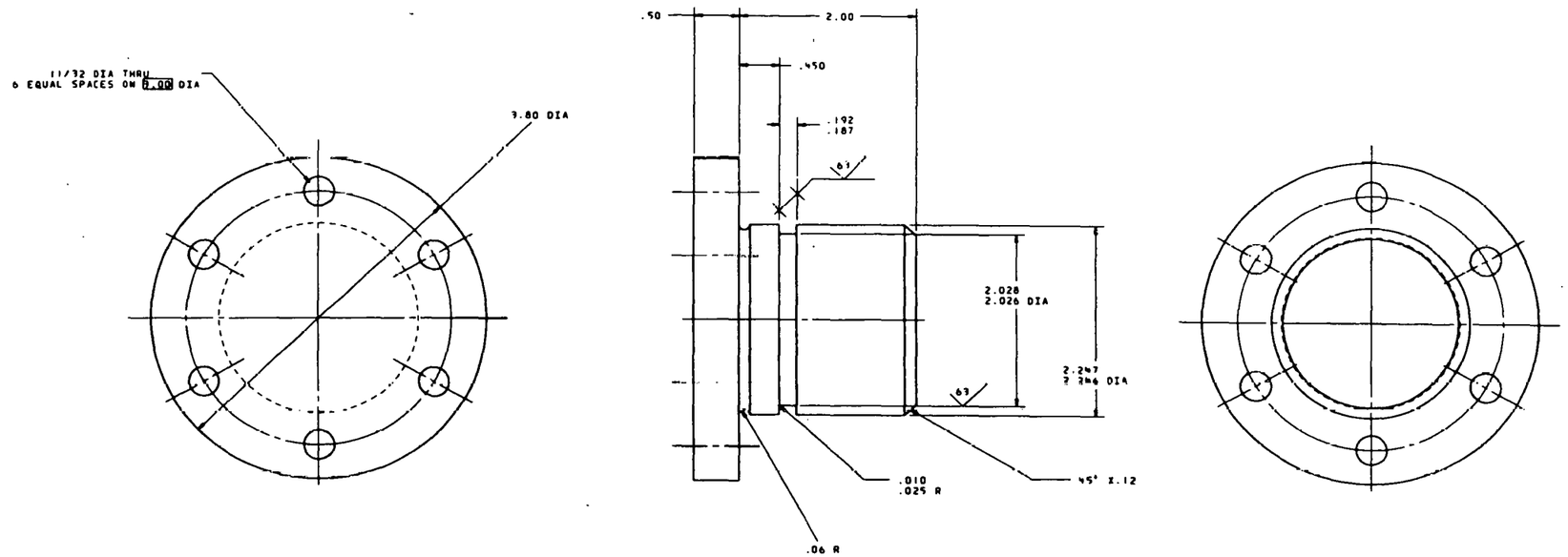

QTY REQD	CODE IDENT	PART OR IDENTIFYING NO	NOMENCLATURE OR DESCRIPTION	MATERIAL DESCRIPTION OR NOTE	MATERIAL SPECIFICATION	ZONE	ITEM NO.
1				4.0" ROD	304/316 SST		1

PARTS LIST

PREPARED FOR
DEPARTMENT OF ENERGY

65294	NEXT ASSY	USED ON
	APPLICATION	

UNLESS OTHERWISE SPECIFIED DIM. ARE IN INCHES. TOLERANCES ON: FRACTIONS = ± 1/16; DECIMALS: .X = ± .1, .XX = ± .03, .XXX = ± .010; ANGLES = ± 2 DEG.

CONTR DE-AC01-82MC19399

CCA/CEI

DATE 2 OCT 82
DWN R.W. ALLEN
APVD
APVD
ENGRG A.D. DANIEL
CHKR
APVD J.W. MEYER
APVD J.H. BONIN

LOCKHEED MISSILES & SPACE COMPANY, INC.
SUNNYVALE, CALIFORNIA

PLUG
VIEW PORT
K. E. MODEL 6

SIZE	FSCM NO.	DRAWING NO.	REV
E	17077	65237	

SCALE 2:1 SH 1 OF 1

65237

MSDD.81-33E
11-18-83

SIDLIB

SK 65237.01..01
90SIE...

ALLEN$COAL FEEDER, PLUG, VIEWPORT

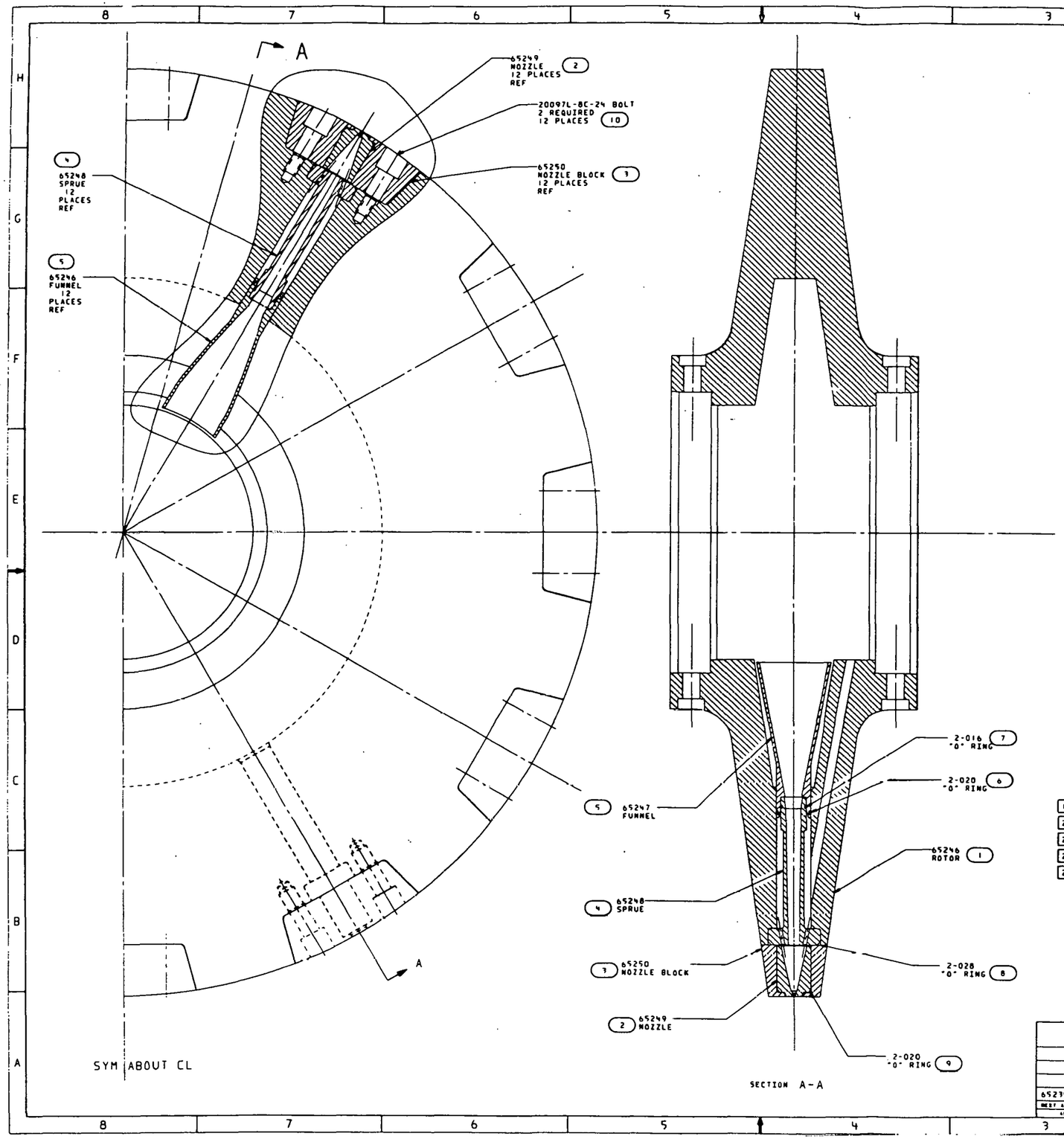

NOTE:

1. UMBRAKO OR EQUIVALENT
2. PARKER OR EQUIVALENT

REVISIONS

ZONE	REV	DESCRIPTION	DATE	APVD

	QTY REQD	CODE IDENT	PART OR IDENTIFYING NO	NOMENCLATURE OR DESCRIPTION	MATERIAL DESCRIPTION OR NOTE	MATERIAL SPECIFICATION	ZONE	ITEM NO.
1	24		20097L-8C-24	SOCKET HEAD CAP SCREW				10
2	12		2-020	"O" RING				9
2	12		2-028	"O" RING				8
2	12		2-016	"O" RING				7
2	12		2-020	"O" RING				6
	12		65247	FUNNEL				5
	12		65248	SPRUE				4
	12		65250	NOZZLE BLOCK				3
	12		65249	NOZZLE				2
	1		65246	ROTOR				1

PARTS LIST

PREPARED FOR
DEPARTMENT OF ENERGY

65234	
NEXT ASSY	USED ON
APPLICATION	

UNLESS OTHERWISE SPECIFIED DIM. ARE IN INCHES. TOLERANCES ON: FRACTIONS = ± 1/16 DECIMALS: .X = ± .1 .XX = ± .03 .XXX = ± .010 ANGLES = ± 2 DEG.

DATE 9 NOV 82
DWN R.W. ALLEN
APVD
APVD
ENGRG A.D. DANIEL
CHKR
APVD J.W. MEYER
APVD J.H. BONIN
CONTR DE-AC21-82MC19299
CCA/CLL

LOCKHEED MISSILES & SPACE COMPANY, INC.
SUNNYVALE, CALIFORNIA

ROTOR ASSEMBLY
K. E. MODEL 6

SIZE E | FSCM NO. 17077 | DRAWING NO. 65245 | REV
SCALE 1:1 | SH 1 OF 1

6

MSDD,81-33E
11-18-83

STDLIB

SK 65245,01,,01
9051E,,,

ALLEN$EOAL FEEDER, ROTOR ASSEMBLY

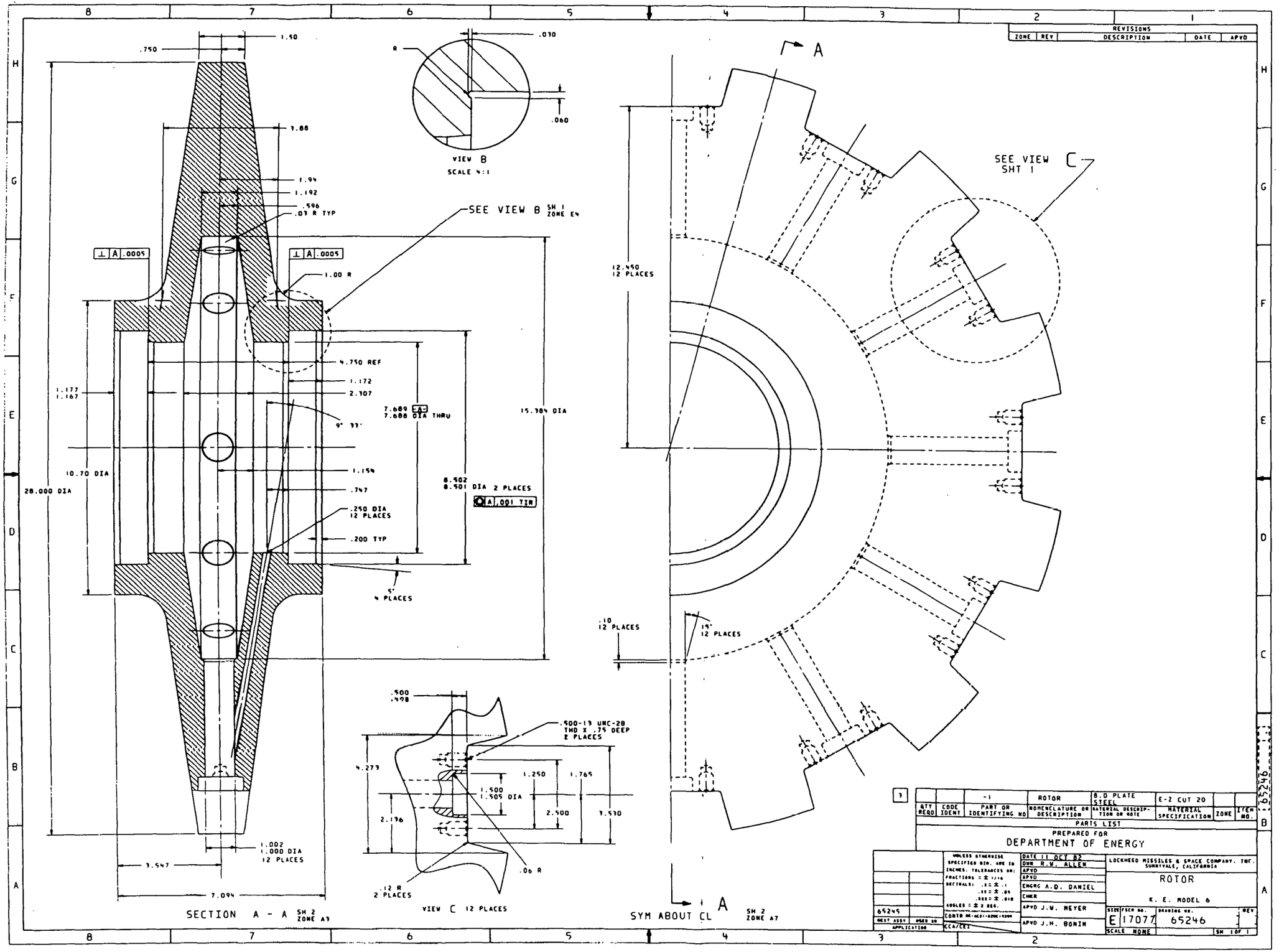

MSDD,81-33E
11-18-83

STDLIB

SK 65246,01,,01
9051E,,,

ALLEN$COAL FEEDER, ROTOR

REVISIONS				
ZONE	REV	DESCRIPTION	DATE	APVD

NOTES:

1. UNLESS OTHERWISE SPECIFIED:
   SURFACE ROUGHNESS 32 PER NAS923
   DRAFT ANGLE 0.5° MAX.
   FILLET RADII .12
   EDGE AND CORNER RADII .03
2. RUBBER STAMP 5541897 AND REV LTR TO WHICH PART IS MFD.
3. ALL DIMENSIONS CENTERED ON DATUM
   DIA -A- TO BE ⌖ A .03 TOTAL

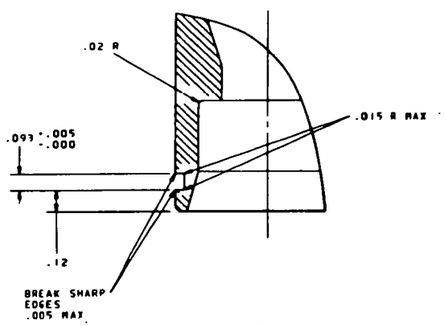

DETATL B
SCALE: 4:1

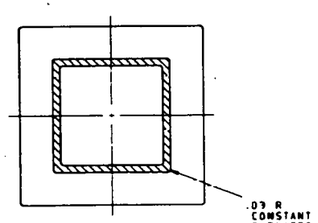

SECTION A - A

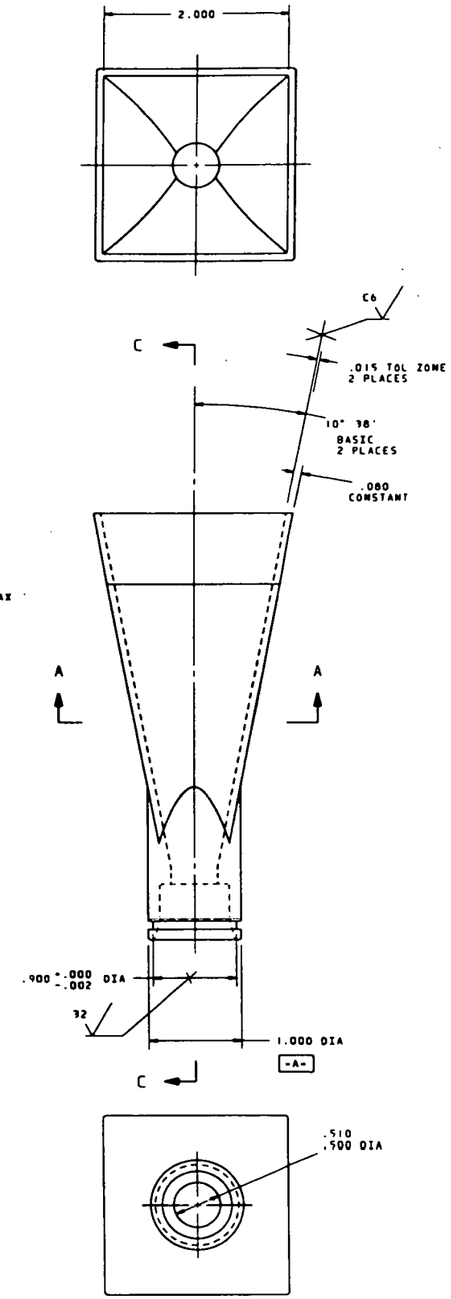

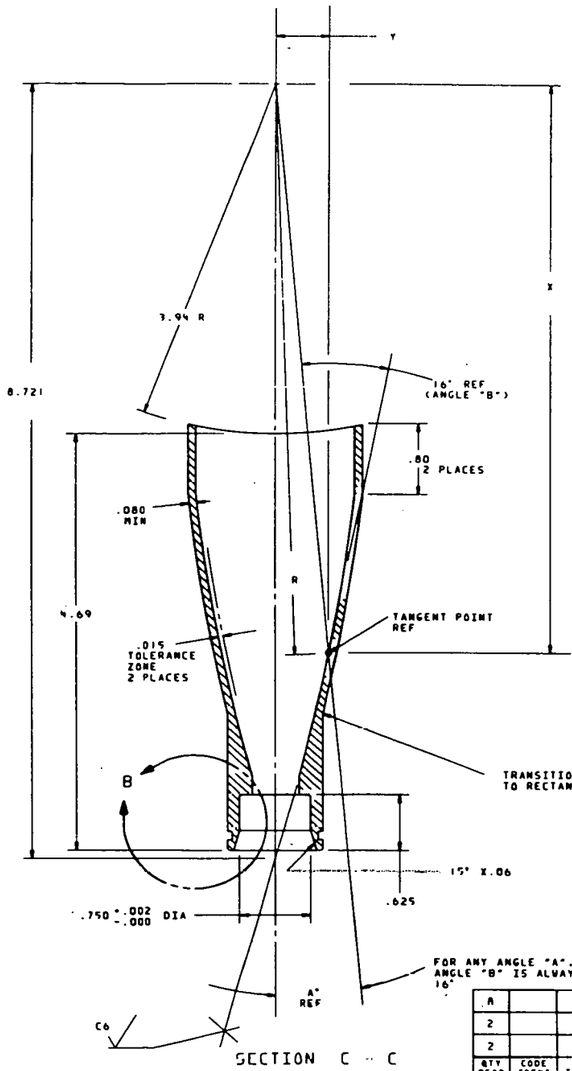

SECTION C - C

16° CONSTANT ANGLE CURVE			
ALL DIMENSIONS BASIC			
A°	R	X	Y
15.00	3.500	3.381	.906
14.00	3.720	3.609	.900
13.06	3.938	3.836	.890
13.00	3.953	3.852	.889
12.00	4.201	4.109	.874
11.00	4.465	4.383	.852
10.00	4.745	4.673	.824
9.00	5.043	4.981	.789
8.00	5.359	5.307	.746
7.00	5.696	5.653	.694
6.00	6.053	6.020	.633
5.00	6.433	6.408	.561
4.00	6.837	6.820	.477
3.00	7.266	7.256	.381
2.00	7.722	7.717	.270
1.00	8.206	8.205	.143
0.00	8.721	8.721	.000

QTY REQD	CODE IDENT	PART OR IDENTIFYING NO	NOMENCLATURE OR DESCRIPTION	MATERIAL DESCRIPTION OR NOTE	MATERIAL SPECIFICATION	ZONE	ITEM NO.
A		-5		ALUMINUM			3
2		-3		STELLITE	NO. 12		2
2		-1	FUNNEL	STELLITE	NO. 711		1

PARTS LIST

PREPARED FOR
DEPARTMENT OF ENERGY

UNLESS OTHERWISE SPECIFIED DIM. ARE IN INCHES. TOLERANCES ON: FRACTIONS ± 1/16 DECIMALS: .0 = ± .1 .00 = ± .03 .000 = ± .010 ANGLES = ± 2 DEG.

DATE 11 OCT 82
DWN R.W. ALLEN
APVD
APVD
ENGRG A.D. DANIEL
CHKR
APVD J.M. MEYER
APVD J.M. BONIN

CONTR NO-AC21-82MC19294
CC A/CC2

LOCKHEED MISSILES & SPACE COMPANY, INC. SUNNYVALE, CALIFORNIA

FUNNEL
K. E. MODEL 6

SIZE E FSCM NO. 17077 DRAWING NO. 65247 REV
SCALE NONE SH OF 1

65245
NEXT ASSY USED ON
APPLICATION

65247

MSDD.81-33E
11-18-83

STDLIB

SK 65247.01.01
9051E...

ALLEN$COAL FEEDER, FUNNEL

REVISIONS				
ZONE	REV	DESCRIPTION	DATE	APVD

NOTES:

1. MEASURED AT EDGE OF PART.

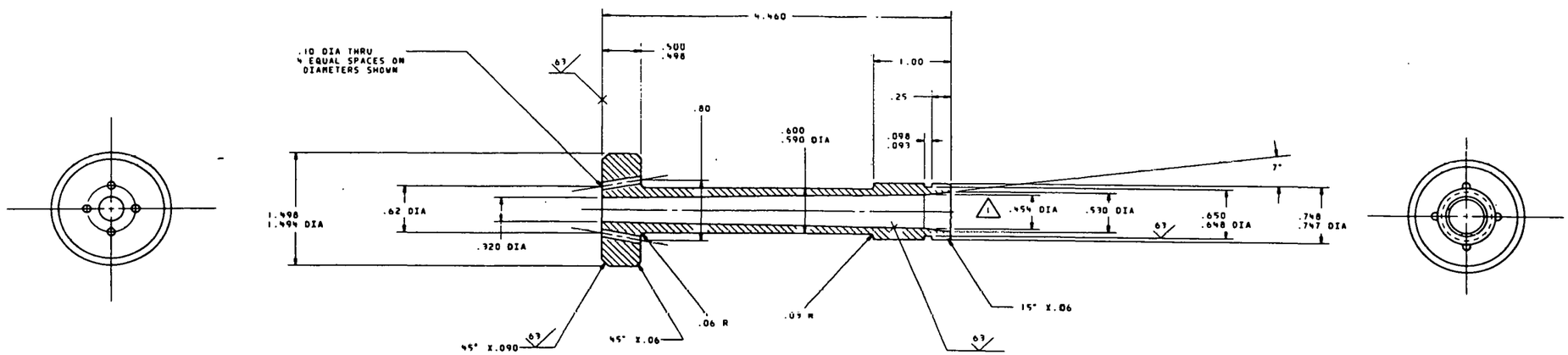

QTY REQD	CODE IDENT	PART OR IDENTIFYING NO	NOMENCLATURE OR DESCRIPTION	MATERIAL DESCRIPTION OR NOTE	MATERIAL SPECIFICATION	ZONE	ITEM NO.
4		-3		TIC			
12		-1		316/304 SST			

PARTS LIST

PREPARED FOR
DEPARTMENT OF ENERGY

UNLESS OTHERWISE SPECIFIED DIM. ARE IN INCHES. TOLERANCES ON: FRACTIONS = ± 1/64, DECIMALS: .X = ± .1, .XX = ± .03, .XXX = ± .010, ANGLES = ± 2 DEG.

CONTR DE-AC21-82MC19206

CCA/CEI

DATE 5 OCT 82
DWN R.W. ALLEN
APVD
APVD
ENGRG A.D. DANIEL
CHKR
APVD J.W. MEYER
APVD J.M. BONIN

LOCKHEED MISSILES & SPACE COMPANY, INC.
SUNNYVALE, CALIFORNIA

SPRUE

K. E. MODEL 6

SIZE E | FSCM NO. 17077 | DRAWING NO. 65248 | REV

SCALE 1:1 | SH 1 OF 1

65245 NEXT ASSY | USED ON
APPLICATION

A-10

MSDD.81-33E
11-18-83

STDLIB

SK 65248.01..01
9051E...

ALLEN$COAL FEEDER, SPRUE

REVISIONS				
ZONE	REV	DESCRIPTION	DATE	APVD
D7	A	1. .087-.088 WAS .084-.089	22AUG82	DANIEL
F4	B	1. ADDED ITEM 4 PLUG	16NOV82	DANIEL

NOTES:

1. BREAK ALL EDGES AND ROUGH CORNERS

[2] PURE INDUSTRIES, INC.
441 HALL AVE
ST. MARYS, PA., 15857
(814)781-1573

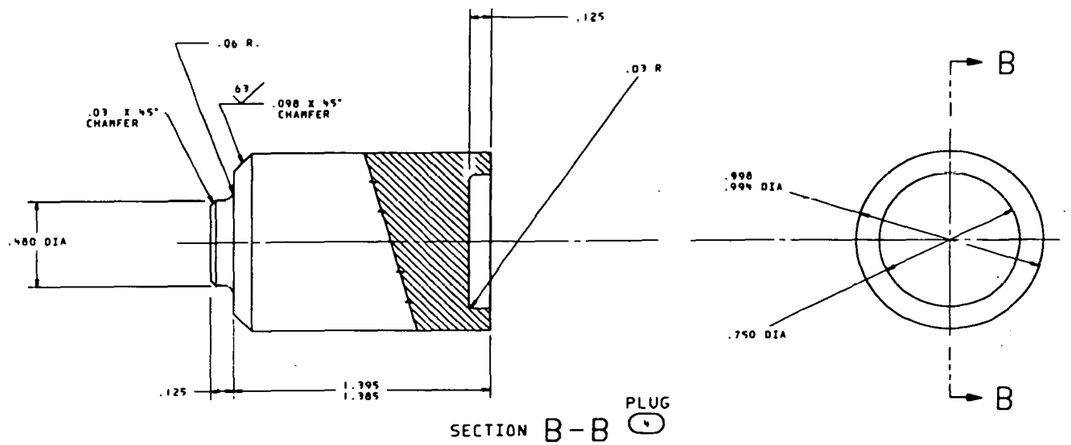

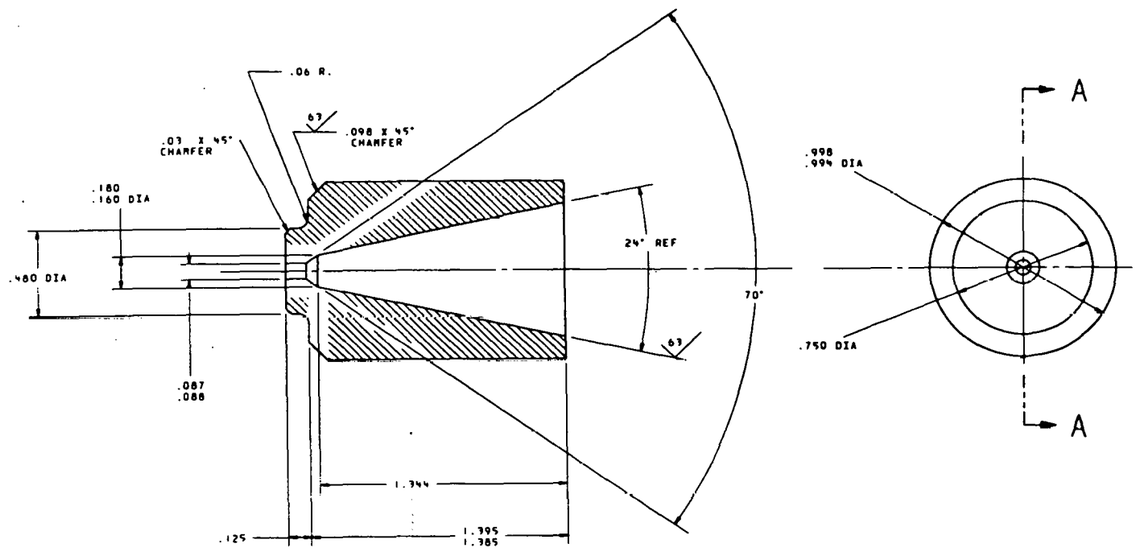

QTY REQD	CODE IDENT	PART OR IDENTIFYING NO	NOMENCLATURE OR DESCRIPTION	MATERIAL DESCRIPTION OR NOTE	MATERIAL SPECIFICATION	ZONE	ITEM NO.
12			PLUG	AL			4
12			NOZZLE	W.C.			3
4			NOZZLE	T.C.			2
4			NOZZLE	PUREBIDE	PE-6923		1

[2]

PARTS LIST

PREPARED FOR
DEPARTMENT OF ENERGY

UNLESS OTHERWISE SPECIFIED DIM. ARE IN INCHES. TOLERANCES ON: FRACTIONS = ± 1/16 DECIMALS: .X = ± .1 .XX = ± .03 .XXX = ± .010 ANGLES = ± 2 DEG.

DATE 25 OCT 82
DWN R.W. ALLEN
APVD
APVD
ENGRG A.D. DANIEL
CHKR
APVD J.W. MEYER
APVD J.H. BONIM

CONTR DE-AC21-82MC19294
ECA/EEI

65245
NEXT ASSY | USED ON
APPLICATION

LOCKHEED MISSILES & SPACE COMPANY, INC.
SUNNYVALE, CALIFORNIA

NOZZLE

K. E. MODEL 6

SIZE	FSCM NO.	DRAWING NO.	REV
E	17077	65249	B

SCALE 4:1 SH 1 OF 1

MSDD.81-33E
11-18-83

STDLIB

SK 65249.01.01
9051E...

ALLEN$COAL FEEDER, NOZZLE

REVISIONS				
ZONE	REV	DESCRIPTION	DATE	APVD

NOTES:

1. ALL MACHINED SURFACES TO BE 125 OR BETTER, EXCEPT AS NOTED

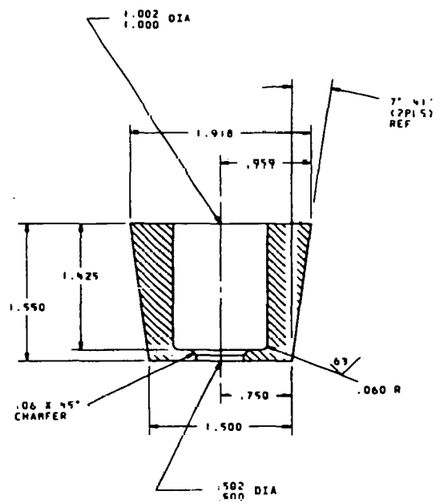

SECTION A–A

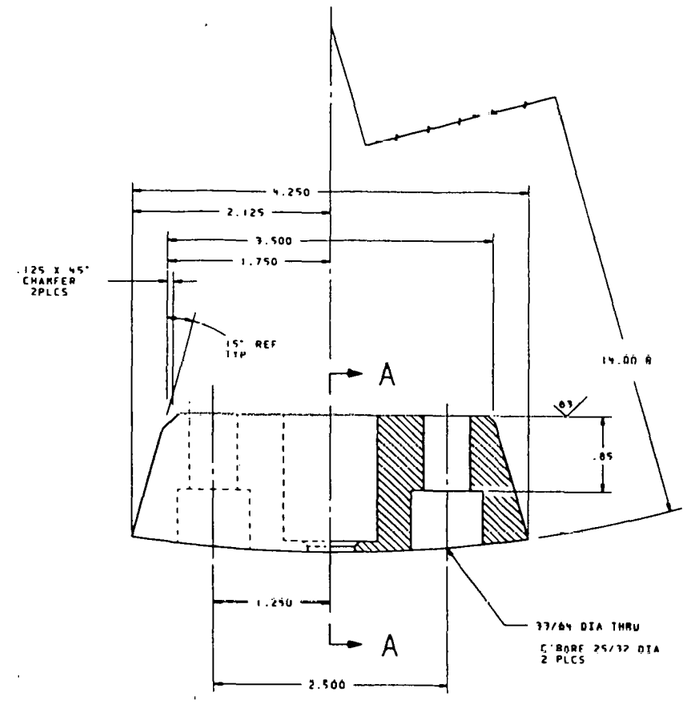

SCALE 2/1

QTY REQD	CODE IDENT	PART OR IDENTIFYING NO	NOMENCLATURE OR DESCRIPTION	MATERIAL DESCRIPTION OR NOTE	MATERIAL SPECIFICATION	ZONE	ITEM NO.
		-1	BLOCK	2.25 SQ BAR	316/304 SST		

PARTS LIST

PREPARED FOR
DEPARTMENT OF ENERGY

UNLESS OTHERWISE SPECIFIED DIM. ARE IN INCHES. TOLERANCES ARE: FRACTIONS = ± 1/16 DECIMALS: .X = ± .1 .XX = ± .03 .XXX = ± .010 ANGLES = ± 1 DEG.

DATE 11 OCT 82
DWN R.W. ALLEN
APVD
APVD
ENGRGA.D. DANIEL
CHKR
APVD J.W. MEYER
APVD J.H. BONIN

LOCKHEED MISSILES & SPACE COMPANY, INC. SUNNYVALE, CALIFORNIA

NOZZLE BLOCK

K. E. MODEL 6

SIZE E FSCM NO. 17077 DRAWING NO. 65250 REV

SCALE 2:1 SH 1 OF 1

65245 NEXT ASSY USED ON APPLICATION

CONTR DE-AC01-82MC19299

CCA/CLEI

MSDD.81-33E
11-18-83

STDLIB

SK 65250.01..01
9051E...

ALLEN$COAL FEEDER. NOZZLE BLOCK

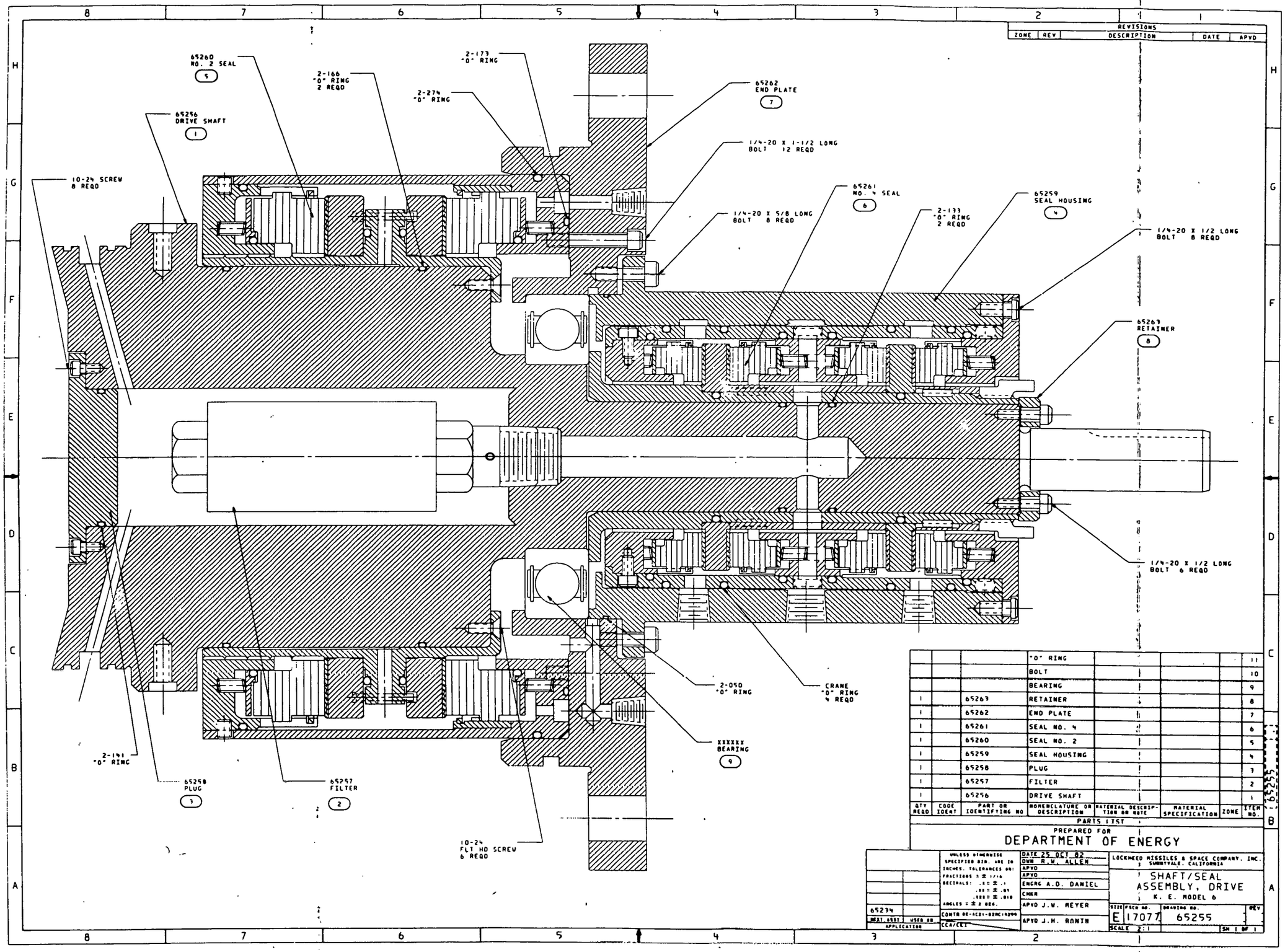

REVISIONS

ZONE	REV	DESCRIPTION	DATE	APVD

QTY REQD	CODE IDENT	PART OR IDENTIFYING NO	NOMENCLATURE OR DESCRIPTION	MATERIAL DESCRIPTION OR NOTE	MATERIAL SPECIFICATION	ZONE	ITEM NO.
			"O" RING				11
			BOLT				10
			BEARING				9
1		65263	RETAINER				8
1		65262	END PLATE				7
1		65261	SEAL NO. 4				6
1		65260	SEAL NO. 2				5
1		65259	SEAL HOUSING				4
1		65258	PLUG				3
1		65257	FILTER				2
1		65256	DRIVE SHAFT				1

PARTS LIST

PREPARED FOR
DEPARTMENT OF ENERGY

UNLESS DIMENSIONS SPECIFIED BIN. ARE IN INCHES. TOLERANCES ON: FRACTIONS ± 1/16 DECIMALS: .XX = ± .1 .XX = ± .01 .XXX = ± .010 ANGLES = ± 2 DEG.

DATE 25 OCT 82
DWN R.W. ALLEN
APVD
APVD
ENGRG A.D. DANIEL
CHKR
APVD J.W. MEYER
APVD J.H. RANTH

LOCKHEED MISSILES & SPACE COMPANY, INC.
SUNNYVALE, CALIFORNIA

SHAFT/SEAL
ASSEMBLY, DRIVE
K. E. MODEL 6

SIZE E | FSCM NO. 17077 | DRAWING NO. 65255 | REV

SCALE 2:1 | SH 1 OF 1

65234
NEXT ASSY | USED ON
APPLICATION

CONTR DE-AC21-82MC16299
CCA/CET

12

MSDD.81-33E
11-18-83

STDLIB

SK 65255.01,.01
SK 65255.01,.02
9051E,,,

ALLEN$COAL FEEDER; ASSEMBLY, SHAFT - DRIVE

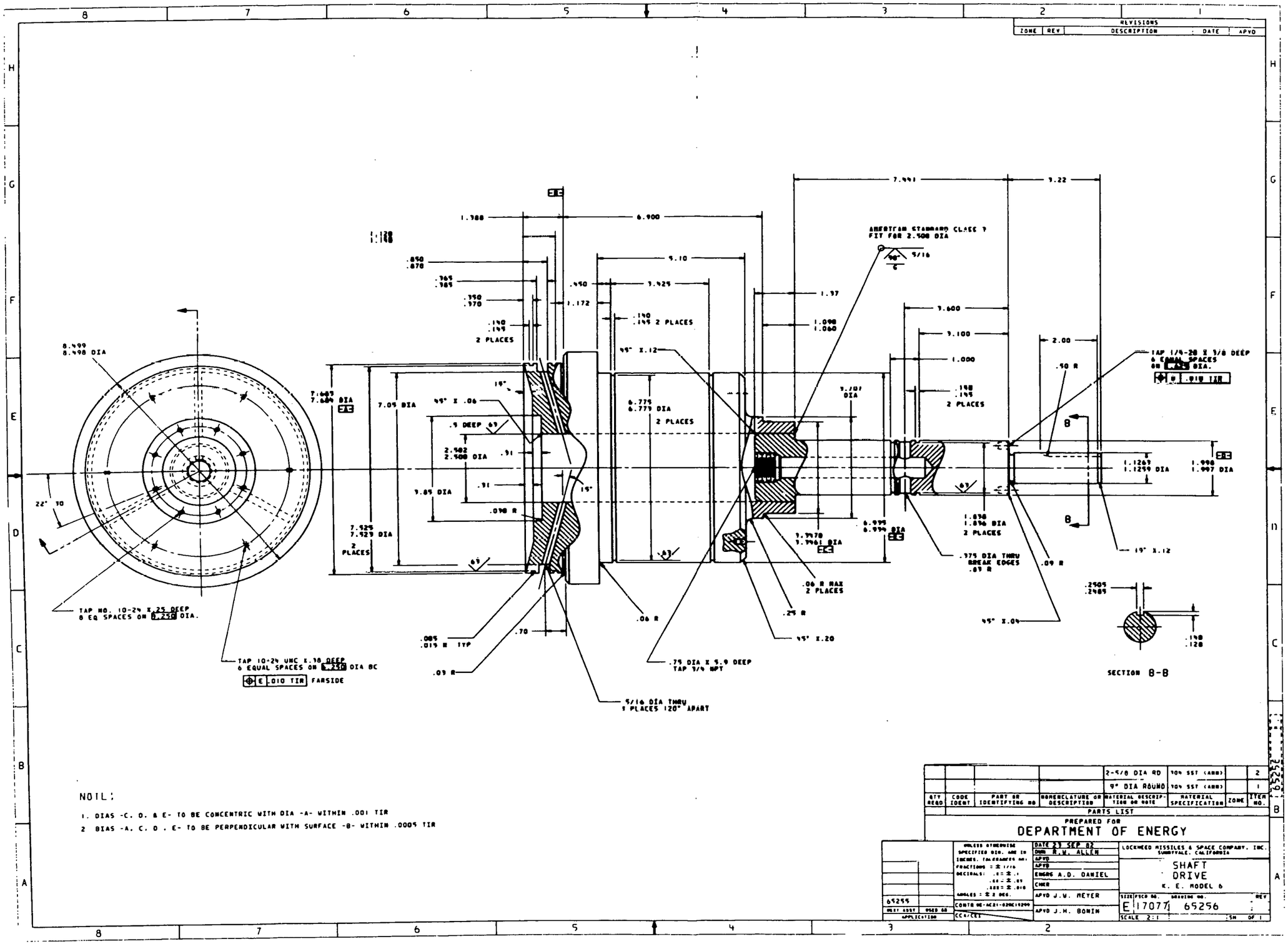

MSDD.81-33E
9-30-83

STDLIB

SK 65256.01..01
SK 65256.01..02
9051E...

ALLENSCOAL FEEDER, SHAFT DRIVE

REVISIONS				
ZONE	REV	DESCRIPTION	DATE	APVD

NOTES:

- MOTT METALLURGICAL CORP.
  FARMINGTON INDUSTRIAL PARK
  FARMINGTON, CONN. 0603

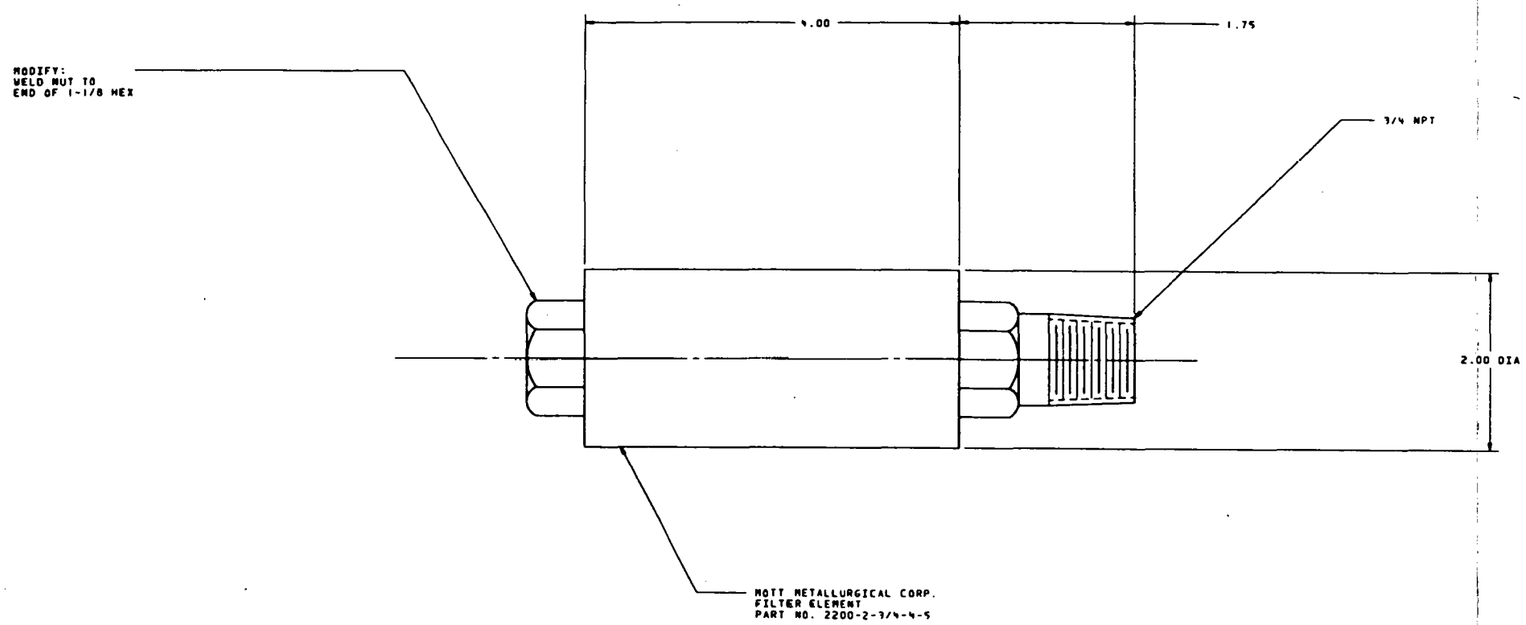

QTY REQD	CODE IDENT	PART OR IDENTIFYING NO	NOMENCLATURE OR DESCRIPTION	MATERIAL DESCRIPTION OR NOTE	MATERIAL SPECIFICATION	ZONE	ITEM NO.

PARTS LIST

PREPARED FOR
DEPARTMENT OF ENERGY

UNLESS OTHERWISE SPECIFIED DIM. ARE IN INCHES. TOLERANCES ON: FRACTIONS = ± 1/16, DECIMALS: .X = ± .1, .XX = ± .03, .XXX = ± .010, ANGLES = ± 2 DEG.

CONTR DE-AC01-82MC19299

DATE 1 OCT 82
DWN R.W. ALLEN
APVD
APVD
ENGRG A.D. DANIEL
CHKR
APVD J.W. MEYER
APVD J.H. BONIN

LOCKHEED MISSILES & SPACE COMPANY, INC.
SUNNYVALE, CALIFORNIA

FILTER
CONTROL GAS
K. E. MODEL 6

SIZE E | FSCM NO. 17077 | DRAWING NO. 65257 | REV

SCALE 1:1 | SH | OF 1

65299
NEXT ASSY | USED ON
APPLICATION

CCA/CEI

65257

14

MSDD.81-33E
11-18-83

STCLIB

SK 65257.01..01
9051E...

ALLEN$COAL FEEDER, FILTER, CONTROL GAS

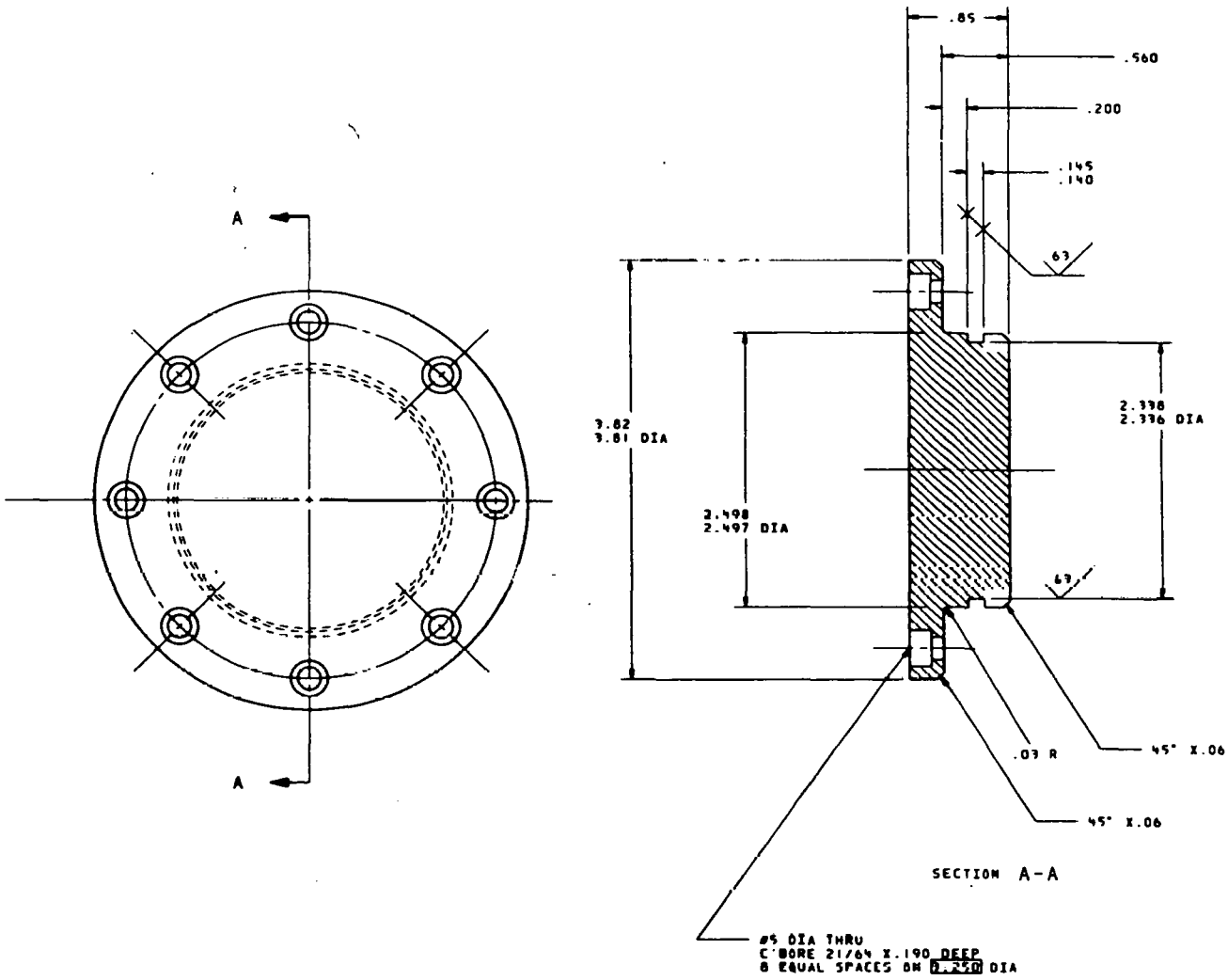

QTY REQD	CODE IDENT	PART OR IDENTIFYING NO	NOMENCLATURE OR DESCRIPTION	MATERIAL DESCRIPTION OR NOTE	MATERIAL SPECIFICATION	ZONE	ITEM NO.
1			PLUG	316/304 SST			1

PARTS LIST

PREPARED FOR
DEPARTMENT OF ENERGY

UNLESS OTHERWISE SPECIFIED DIM. ARE IN INCHES. TOLERANCES ON: FRACTIONS = ± 1/16 DECIMALS: .X = ± .1 .XX = ± .03 .XXX = ± .010 ANGLES = ± 2 DEG.	DATE 6 OCT 82	LOCKHEED MISSILES & SPACE COMPANY, INC. SUNNYVALE, CALIFORNIA
	DWN R.W. ALLEN	
	APVD	
	APVD	PLUG FILTER K. E. MODEL 6
	ENGRG A.D. DANIEL	
	CHKR	
65255	APVD J.W. MEYER	SIZE E / FSCM NO. 17077 / DRAWING NO. 65258 / REV
NEXT ASSY / USED ON	CONTR DE-AC21-82MC19294	
APPLICATION	CCA/CEI	APVD J.H. BONIN / SCALE 2:1 / SH 1 OF 1

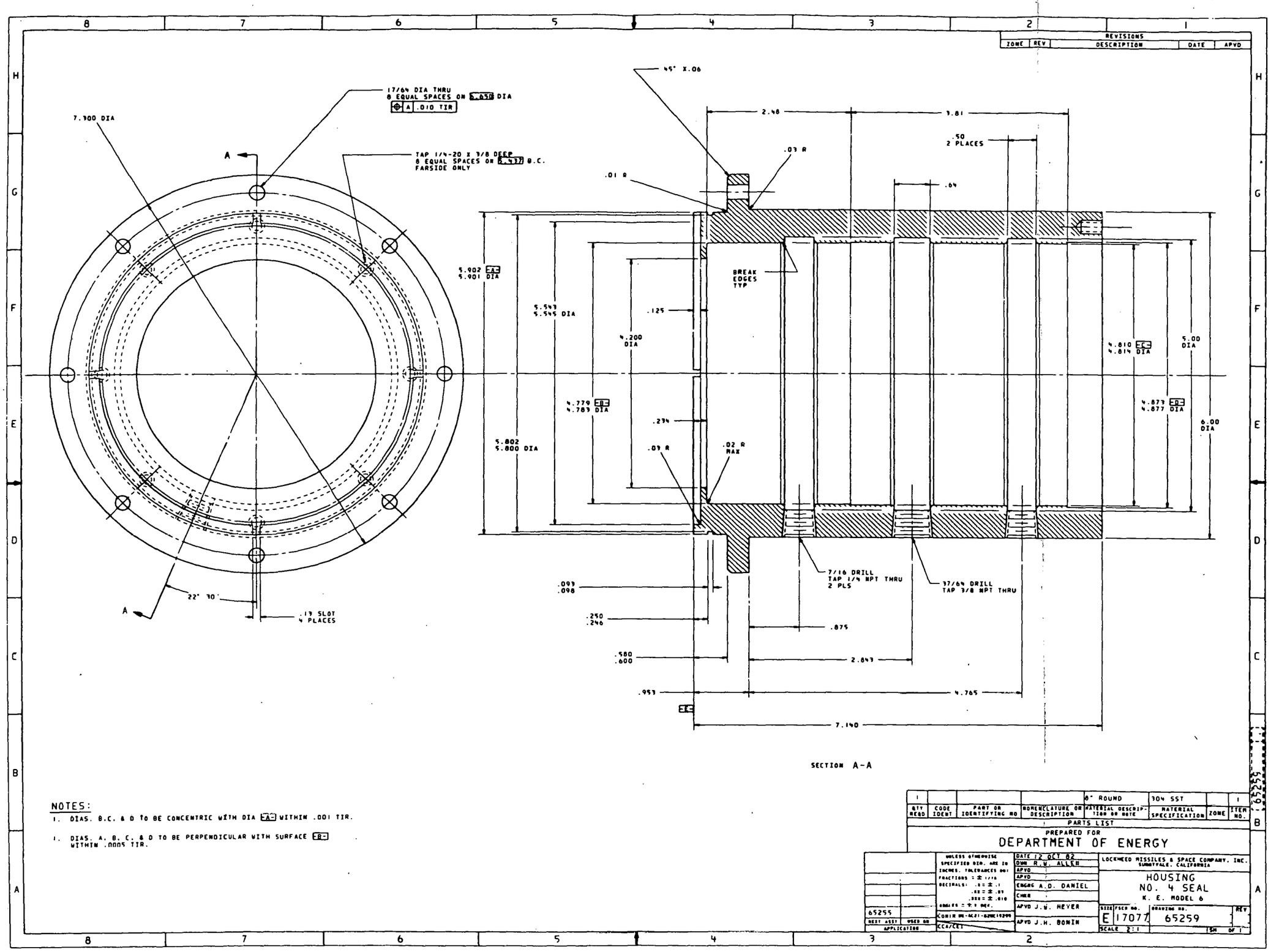

16

MSDD.81-33E
11-18-83

STDLIB

SK 65259.01.01
9051E...

ALLEN-COAL FEEDER, HOUSING, NO. 4 SEAL

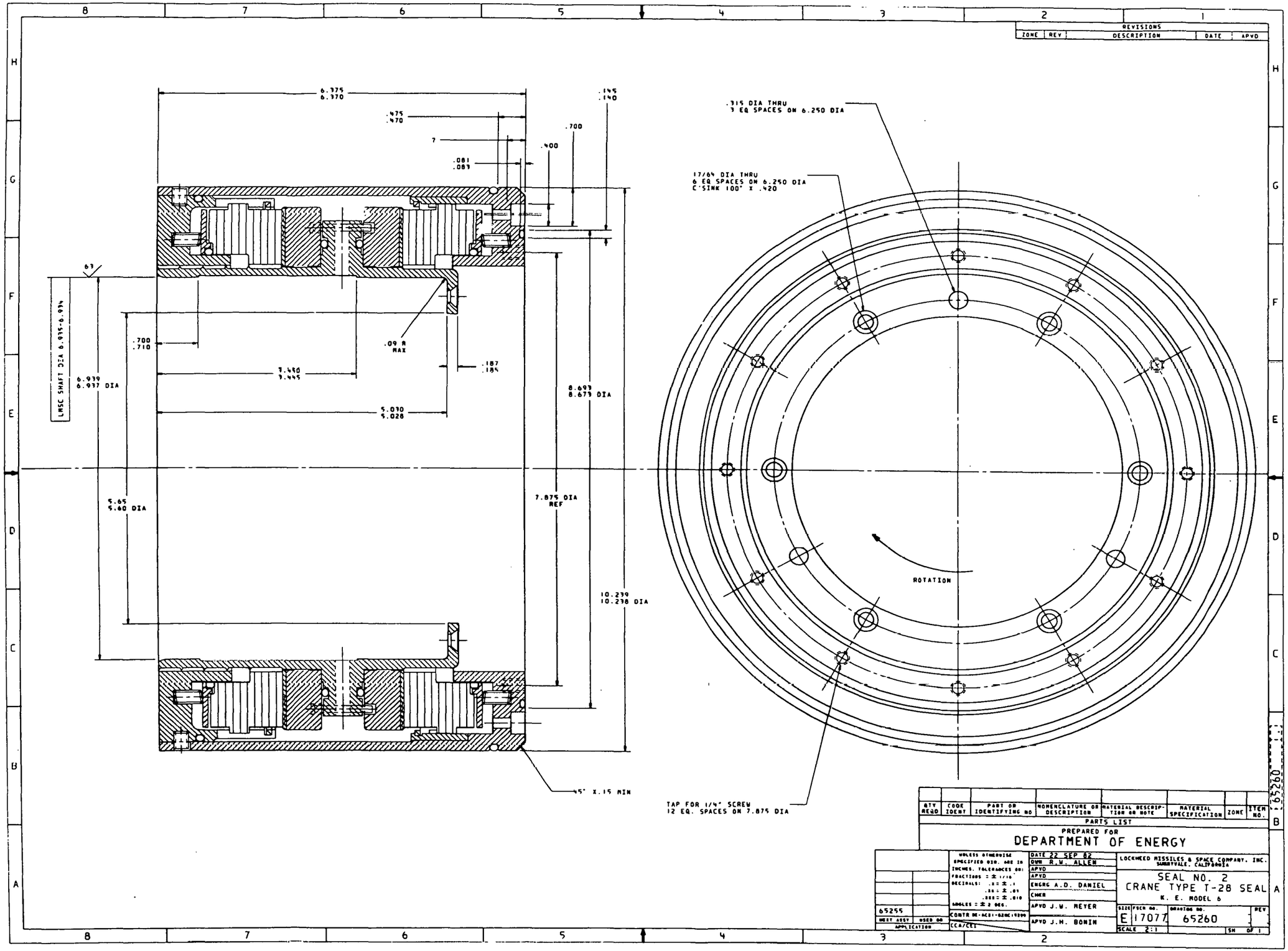

MSDD 81-33E
11-18-83

STDLIB

SK 65260.01.01
9051E...

ALLEN$COAL FEEDER, SEAL, CRANE TYPE T-28, NO. 2

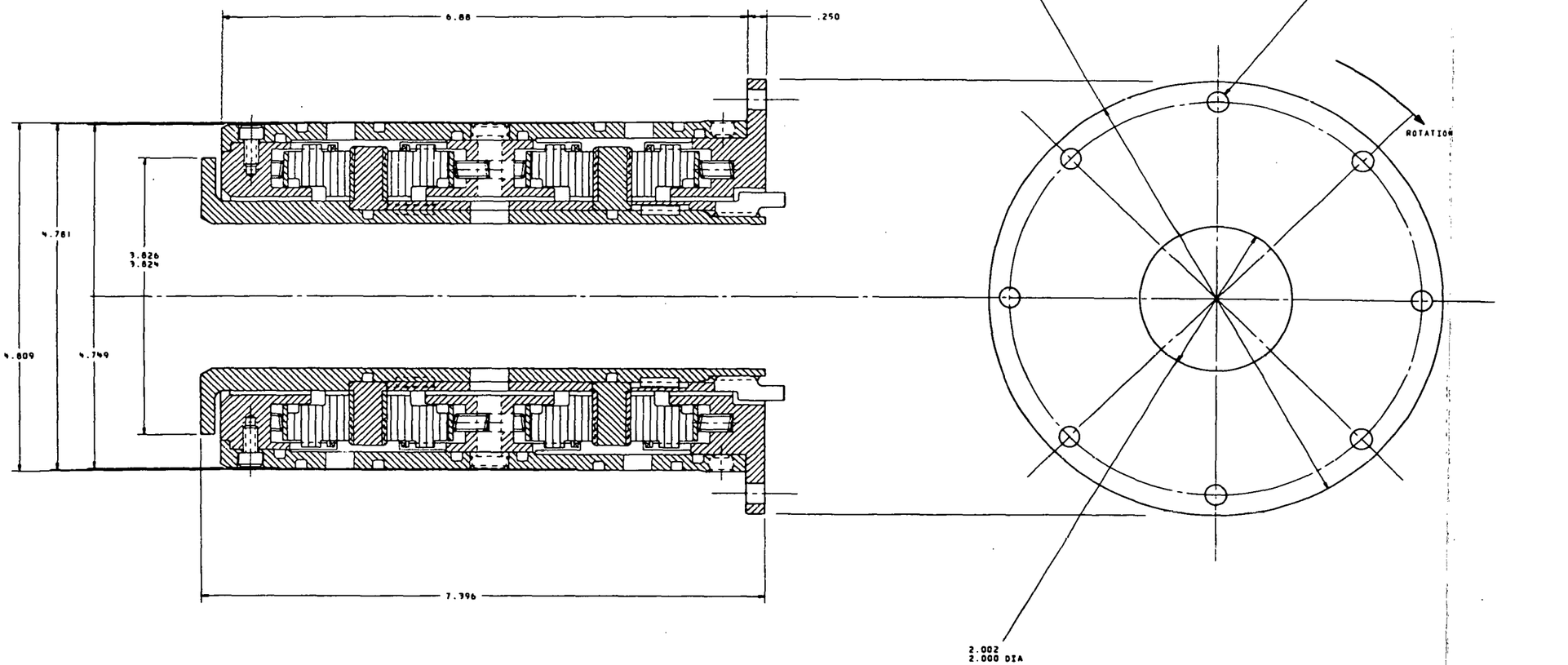

ZONE	REV	REVISIONS DESCRIPTION	DATE	APVD

QTY REQD	CODE IDENT	PART OR IDENTIFYING NO	NOMENCLATURE OR DESCRIPTION	MATERIAL DESCRIPTION OR NOTE	MATERIAL SPECIFICATION	ZONE	ITEM NO.

PARTS LIST

PREPARED FOR
DEPARTMENT OF ENERGY

UNLESS OTHERWISE SPECIFIED DIM. ARE IN INCHES. TOLERANCES ON: FRACTIONS = ± 1/16 DECIMALS: .X = ± .1 .XX = ± .03 .XXX = ± .010 ANGLES = ± 2 DEG.

65255

NEXT ASSY | USED ON
APPLICATION

CONTR DE-AC21-82MC19299

CCA/CCS

DATE 25 OCT 82
DWN R.W. ALLEN
APVD
APVD
ENGRG A.O. DANIEL
CHKR
APVD J.W. MEYER
APVD J.H. BONIN

LOCKHEED MISSILES & SPACE COMPANY, INC.
SUNNYVALE, CALIFORNIA

SEAL NO. 4
CRANE TYPE T-28 SEAL
K. E. MODEL 6

SIZE E | FSCM NO. 17077 | DRAWING NO. 65261 | REV

SCALE 2:1 | SH 1 OF 1

65261

MSDD.81-33E
11-18-83

8

STD_IB

SK 65261.01..01
9051E...

ALLEN$COAL FEEDER, SHAFT/SEAL ASSEMBLY, DRIVE

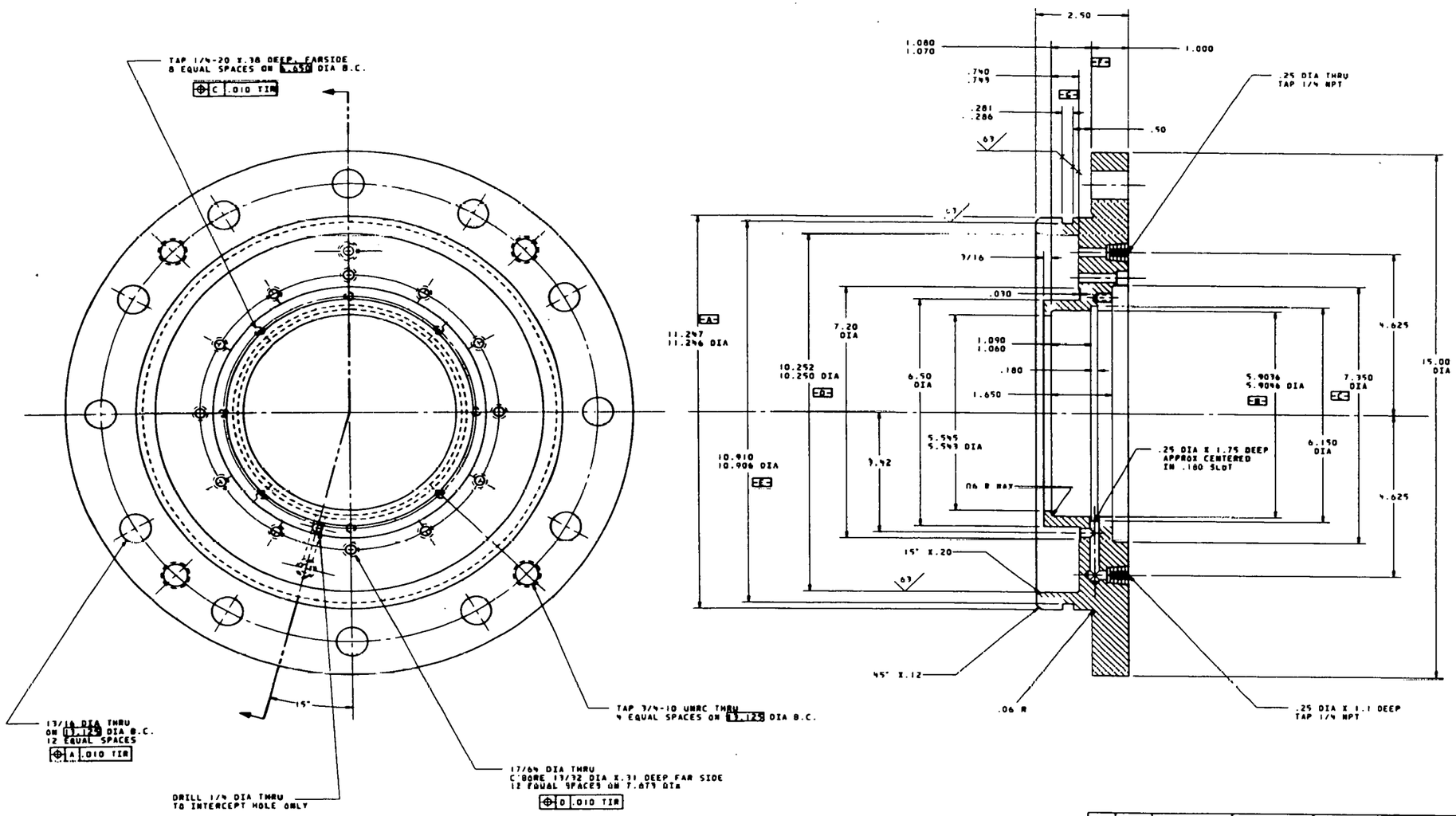

NOTE:

1. DIAS B. C. D. E. TO BE CONCENTRIC WITH DIA -A- WITHIN .001 TIR
2. DIAS A. B. C. D. TO BE PERPENDICULAR WITH SURFACE -F- WITHIN .0005 TIR
3. SURFACE -G- TO BE PERPENDICULAR WITH DIA -D- WITHIN .0005 TIR

REVISIONS			
ZONE	REV	DESCRIPTION	DATE APVD

QTY REQD	CODE IDENT	PART OR IDENTIFYING NO	NOMENCLATURE OR DESCRIPTION	MATERIAL DESCRIPTION OR NOTE	MATERIAL SPECIFICATION	ZONE	ITEM NO.
				2-1/2" PLATE	304 SST ANN		1

PARTS LIST

PREPARED FOR
DEPARTMENT OF ENERGY

UNLESS OTHERWISE SPECIFIED DIM ARE IN INCHES. TOLERANCES ON: FRACTIONS = ± 1/16 DECIMALS: .X = ± .4 .XX = ± .09 .XXX = ± .010 ANGLES = ± 2 DEG.

DATE 7 OCT 82
DWN R.V. ALLEN
APVD
APVD
ENGRG A.D. DANIEL
CHKD
APVD J.W. MEYER
APVD J.H. BORIN

LOCKHEED MISSILES & SPACE COMPANY, INC.
SUNNYVALE, CALIFORNIA

END PLATE
DRIVE
K. E. MODEL 6

SIZE E FSCM NO. 17077 DRAWING NO. 65262 REV

SCALE 1:1 SH OF 1

65255
NEXT ASSY USED ON
APPLICATION

CONTR DE-AC01-82MC18996
CCA/LEL

65262

MSDD.81-33E
9-30-83

STDLIB

SK 65262.01.01
9051E...

ALLENSCOAL FEEDER, END PLATE, DRIVE SIDE

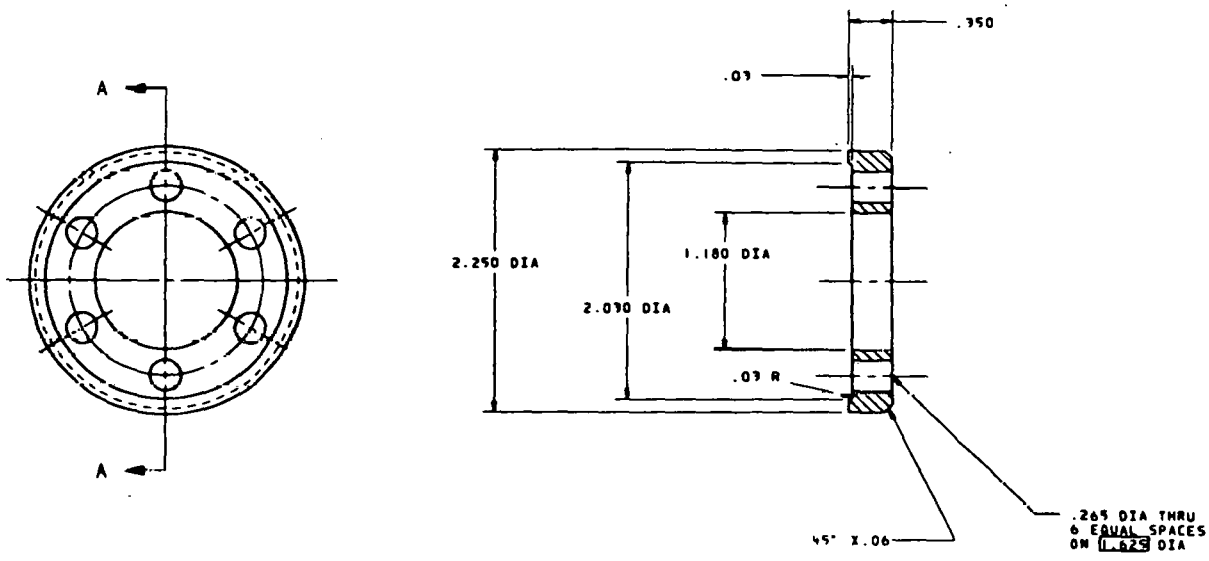

QTY REQD	CODE IDENT	PART OR IDENTIFYING NO	NOMENCLATURE OR DESCRIPTION	MATERIAL DESCRIPTION OR NOTE	MATERIAL SPECIFICATION	ZONE	ITEM NO
1			RETAINER-SEAL	316/304 SST			1

PARTS LIST

PREPARED FOR

DEPARTMENT OF ENERGY

UNLESS OTHERWISE SPECIFIED DIM. ARE IN INCHES. TOLERANCES ON: FRACTIONS = ± 1/16 DECIMALS: .X = ± .1 .XX = ± .03 .XXX = ± .010 ANGLES = ± 2 DEG.

DATE 6 OCT 82
DWN R.W. ALLEN
APVD
APVD
ENGRG A.D. DANIEL
CHKR
APVD J.W. MEYER
APVD J.H. BONIN

LOCKHEED MISSILES & SPACE COMPANY, INC.
SUNNYVALE, CALIFORNIA

RETAINER
SEAL
K. E. MODEL 6

SIZE E | FSCM NO. 17077 | DRAWING NO. 65263 | REV

SCALE 2:1 | SH | OF 1

65255
NEXT ASSY | USED ON
APPLICATION

CCA/CEI

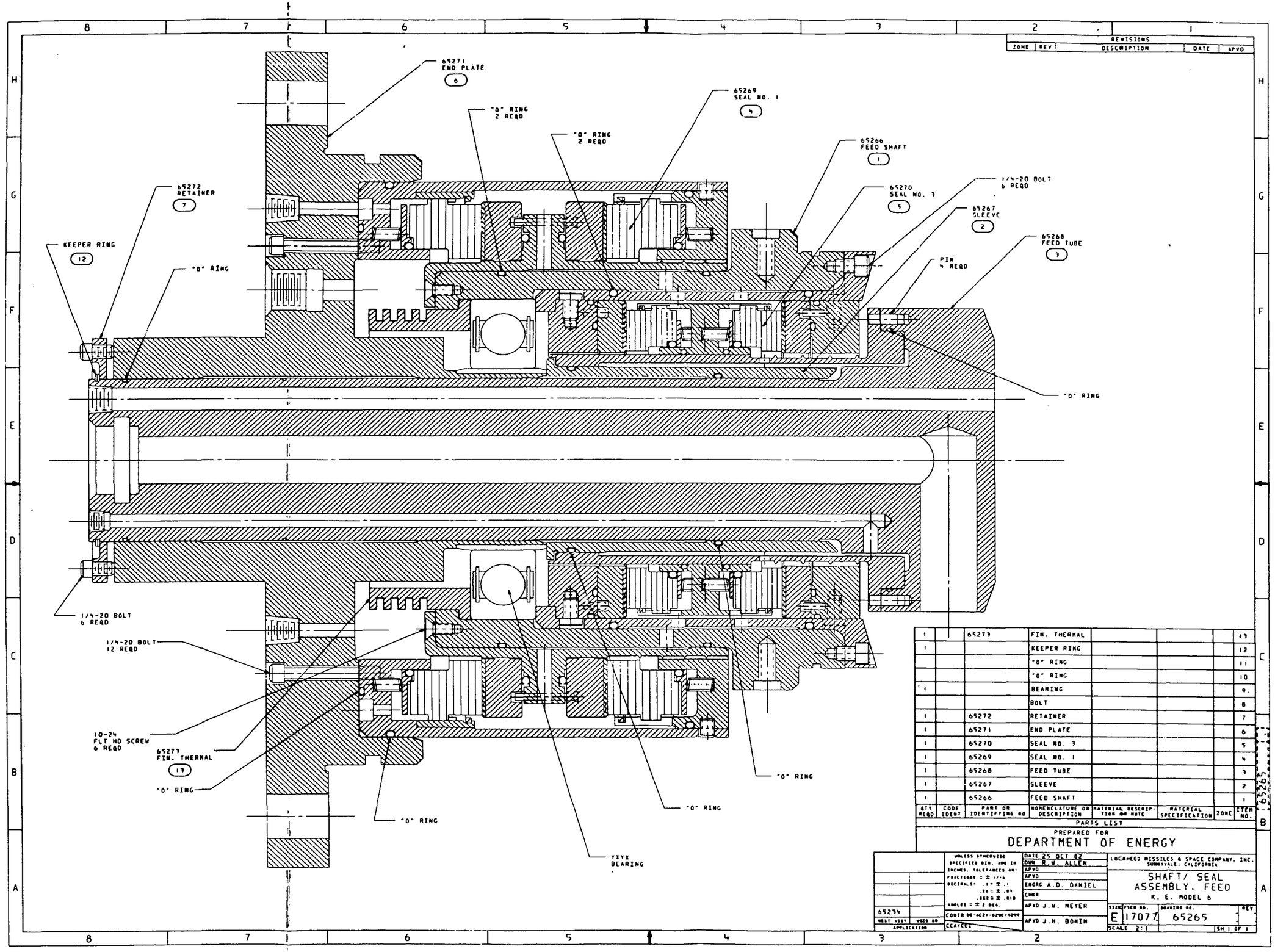

QTY REQD	CODE IDENT	PART OR IDENTIFYING NO	NOMENCLATURE OR DESCRIPTION	MATERIAL DESCRIPTION OR NOTE	MATERIAL SPECIFICATION	ZONE	ITEM NO.
1		65273	FIN. THERMAL				13
1			KEEPER RING				12
			"O" RING				11
			"O" RING				10
1			BEARING				9
			BOLT				8
1		65272	RETAINER				7
1		65271	END PLATE				6
1		65270	SEAL NO. 3				5
1		65269	SEAL NO. 1				4
1		65268	FEED TUBE				3
1		65267	SLEEVE				2
1		65266	FEED SHAFT				1

PARTS LIST

PREPARED FOR
DEPARTMENT OF ENERGY

REVISIONS				
ZONE	REV	DESCRIPTION	DATE	APVD

UNLESS OTHERWISE SPECIFIED DIM. ARE IN INCHES. TOLERANCES ON: FRACTIONS = ± 1/16, DECIMALS: .X = ± .1, .XX = ± .03, .XXX = ± .010, ANGLES = ± 2 DEG.

65234
NEXT ASSY | USED ON
APPLICATION

CONTR DE-AC21-82MC19299
CCA/CES

DATE 25 OCT 82
DWN R.W. ALLEN
APVD
APVD
ENGRG A.D. DANIEL
CHKR
APVD J.W. MEYER
APVD J.H. BONIN

LOCKHEED MISSILES & SPACE COMPANY, INC.
SUNNYVALE, CALIFORNIA

SHAFT/ SEAL
ASSEMBLY, FEED
K. E. MODEL 6

SIZE E | FSCM NO. 17077 | DRAWING NO. 65265 | REV
SCALE 2:1 | SH 1 OF 1

MSDD.81-33E
11-18-83

STDLIB

SK 65265.01,.01
SK 65265.01,.02
9051E,,,

ALLENSCOAL FEEDER, SHAFT/SEAL ASSY-FEED

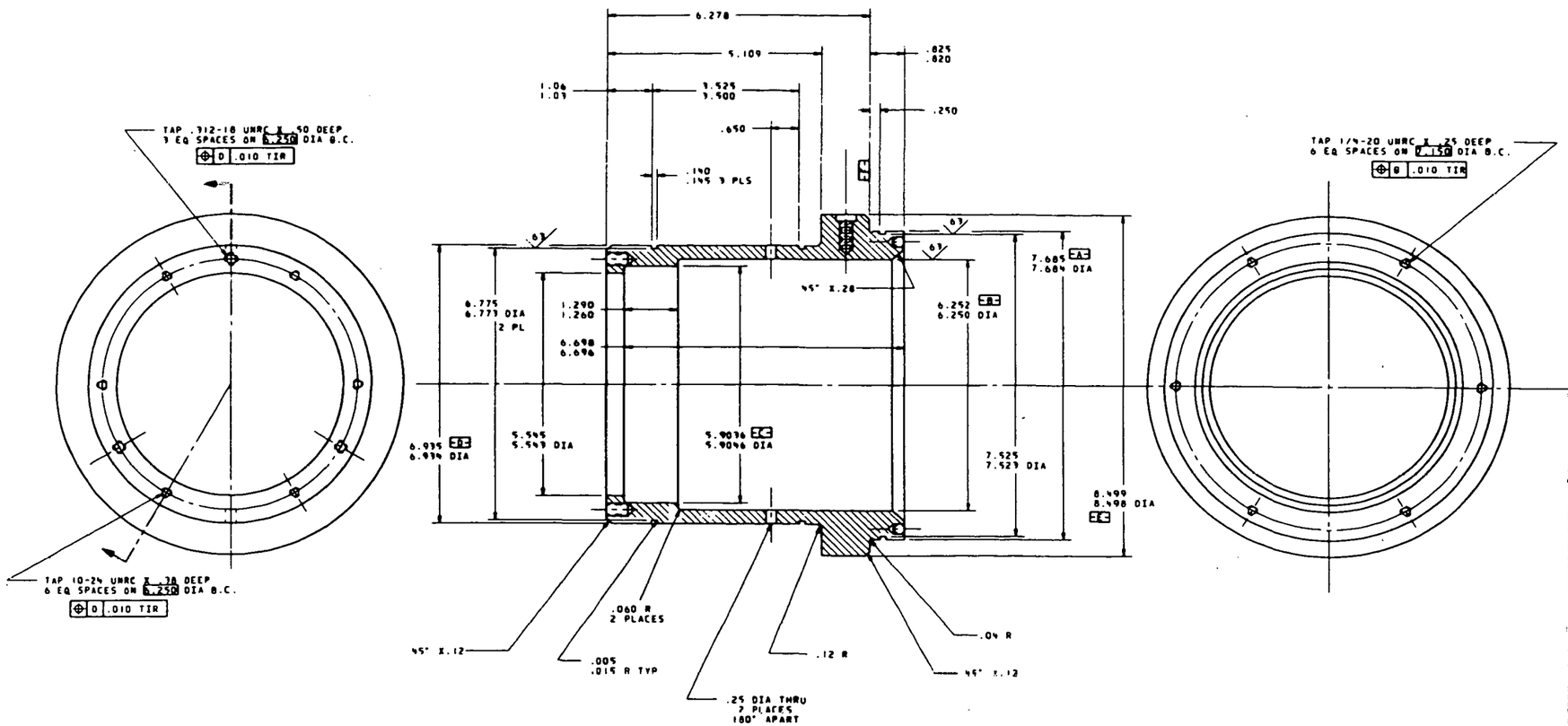

NOTE:

1. DIAS -B, C, D, & E- TO BE CONCENTRIC WITH DIA -A- WITHIN .001 TIR
2. DIAS -A, B, C, D, E- TO BE PERPENDICULAR WITH SURFACE -F- WITHIN .0005 TIR

QTY REQD	CODE IDENT	PART OR IDENTIFYING NO	NOMENCLATURE OR DESCRIPTION	MATERIAL DESCRIPTION OR NOTE	MATERIAL SPECIFICATION	ZONE	ITEM NO.
				9" DIA ROUND	304 SST ANN		1

PARTS LIST

PREPARED FOR
DEPARTMENT OF ENERGY

UNLESS OTHERWISE SPECIFIED DIM. ARE IN INCHES. TOLERANCES ON: FRACTIONS = ± 1/16 DECIMALS: .X = ± .1 .XX = ± .03 .XXX = ± .010 ANGLES = ± 2 DEG.

FINISH RMS-ACA-ASMC19299

CCA/CEL

DATE 23 SEP 82
DWN R.W. ALLEN
APVD
APVD
ENGRG A.D. DANIEL
CHKR
APVD J.W. MEYER
APVD J.M. BONIN

LOCKHEED MISSILES & SPACE COMPANY, INC.
SUNNYVALE, CALIFORNIA

SHAFT FEED
K. E. MODEL 6

SIZE E | SCH NO. 17077 | DRAWING NO. 65266 | REV

SCALE 1:1 | SH 1 OF 1

65265
NEXT ASSY | USED ON
APPLICATION

65266

MSDD.81-33E
1-09-84

STDLIB

SK 65266.01..01
905IE...

ALLEN$COAL FEEDER, SHAFT FEED

REVISIONS				
ZONE	REV	DESCRIPTION	DATE	APVD

NOTES:

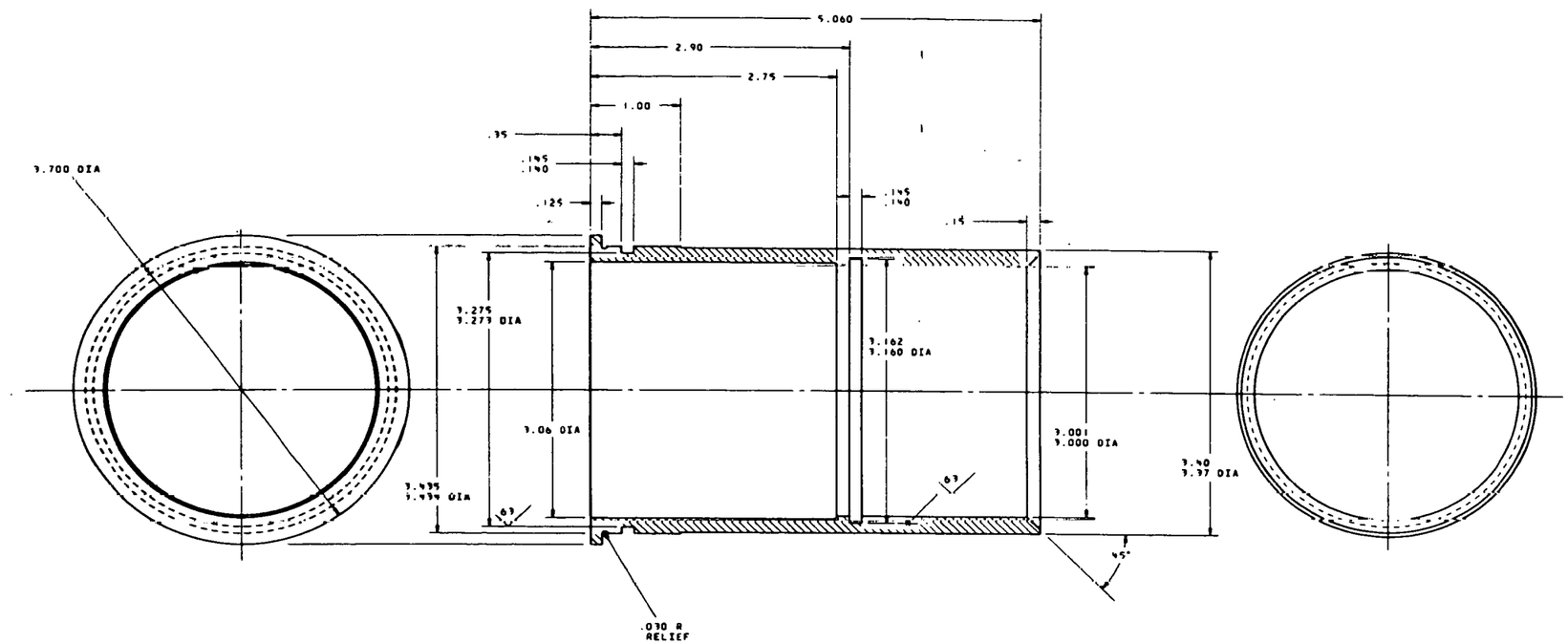

QTY REQD	CODE IDENT	PART OR IDENTIFYING NO.	NOMENCLATURE OR DESCRIPTION	MATERIAL DESCRIPTION OR NOTE	MATERIAL SPECIFICATION	ZONE	ITEM NO.
1			4" ROUND	316/304 SST			1

PARTS LIST

PREPARED FOR
DEPARTMENT OF ENERGY

UNLESS OTHERWISE SPECIFIED DIM. ARE IN INCHES. TOLERANCES ON: FRACTIONS = ± 1/16 DECIMALS: .X = ± .1 .XX = ± .03 .XXX = ± .010 ANGLES = ± 2 DEG.

DATE 4 OCT 82
DWN R.W. ALLEN
APVD
APVD
ENGRG A.D. DANIEL
CHKR
APVD J.W. MEYER
APVD J.H. BONIN

LOCKHEED MISSILES & SPACE COMPANY, INC.
SUNNYVALE, CALIFORNIA

SLEEVE
FEED TUBE
K. E. MODEL 6

SIZE E | FSCM NO. 17077 | DRAWING NO. 65267 | REV

SCALE 1:1 | SH OF 1

65265
NEXT ASSY | USED ON
APPLICATION

CONTR DE-AC01-82MC19299
CC/CCI

65267

MSDD.81-33E
9-30-83

STDLIB

SK 65267.01.0!
9051E...

ALLEN$COAL FEEDER, SLEEVE, FEED TUBE

MSDD.81-33E
1-09-84

REVISIONS				
ZONE	REV	DESCRIPTION	DATE	APVD

NOTES:

1. ALL MACHINE SURFACES TO 125 OR BETTER AND NOTED
2. BREAK ALL EDGES AND ROUGH CORNERS
3. MAY BE PURCHASED FROM RYERSON EMERYVILLE, CA.
4. REF DWG. 5533516 APPLY NITRIDED GAS SALT BATH DIFFUSION COATING .0007 MIN THICK TO OBTAIN A RADIAL CLEARANCE OF .0015/.0020 WITH THE I. D. OF 5533524

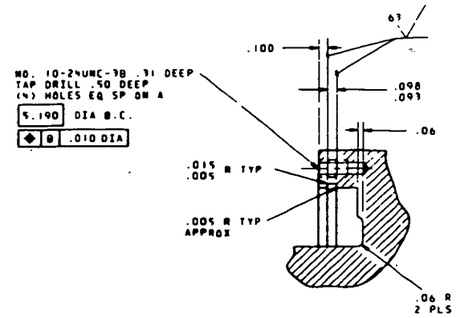

DETAIL D
SCALE 2/1

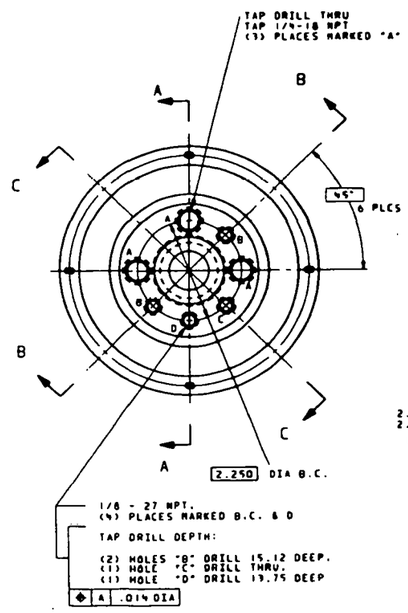

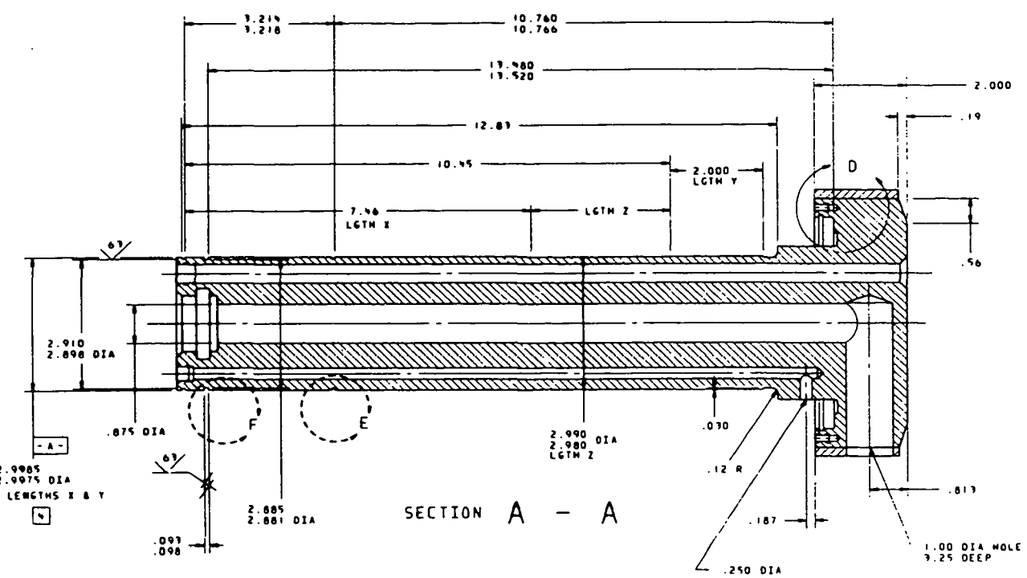

SECTION A - A

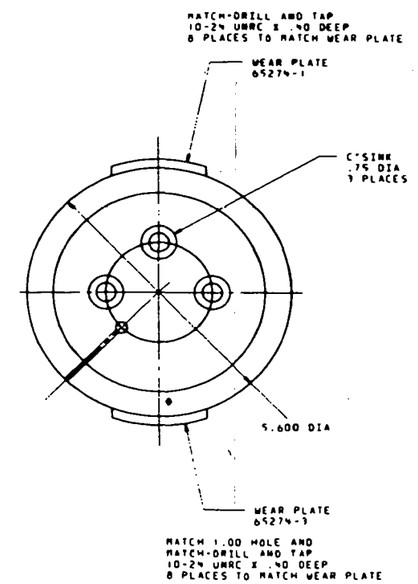

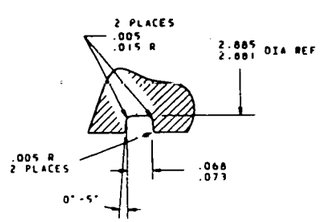

DETAIL F
SCALE 8/1
TYP (2) PLACES

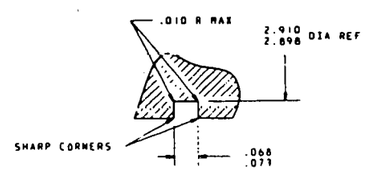

DETAIL E
SCALE 8/1
TYP (2) PLACES

QTY REQD	CODE IDENT	PART OR IDENTIFYING NO	NOMENCLATURE OR DESCRIPTION	MATERIAL DESCRIPTION OR NOTE	MATERIAL SPECIFICATION	TOOL	ITEM NO.
8			SCREW	10-24 X 1/2			4
1		65274-3	WEAR PLATE				3
1		65274-1	WEAR PLATE				2
1			INPUT SHAFT	6.00 DIA ROD TYPE 416 CRES	AMS 5610		1

PARTS LIST

PREPARED FOR:
DEPARTMENT OF ENERGY

UNLESS OTHERWISE SPECIFIED DIM. ARE IN INCHES TOLERANCES ON: FRACTIONS ± 1/16 DECIMALS .1 ± .1 .01 ± .05 .001 ± .010 ANGLES ± 1/2 DEG

DATE 11 OCT 82
DWN R.W. ALLEN
APVD
APVD
ENGRG A.D. DANIEL
CHKR
APVD J.W. MEYER
APVD J.H. BUNIN

LOCKHEED MISSILES & SPACE COMPANY, INC
SUNNYVALE, CALIFORNIA

TUBE
COAL FEED
K. E. MODEL 6

SIZE/FSCM NO. E 17077 DRAWING NO. 65268 REV 1
SCALE 1:1 SH OF 1

SK 65268.01.01
9C51E...

STDLIB

ALLEN$COAL FEEDER, TUBE, COAL FEED

MSDD.81-33E
9-30-83

REVISIONS				
ZONE	REV	DESCRIPTION	DATE	APVD

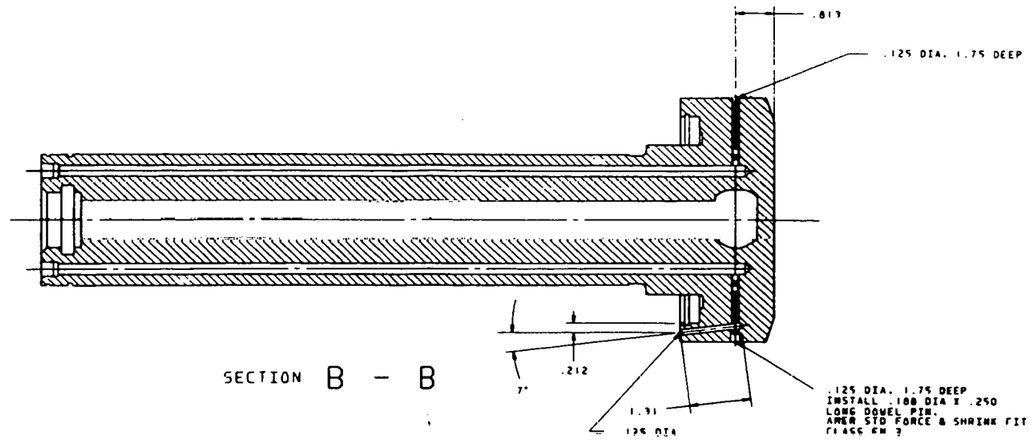

SECTION B - B

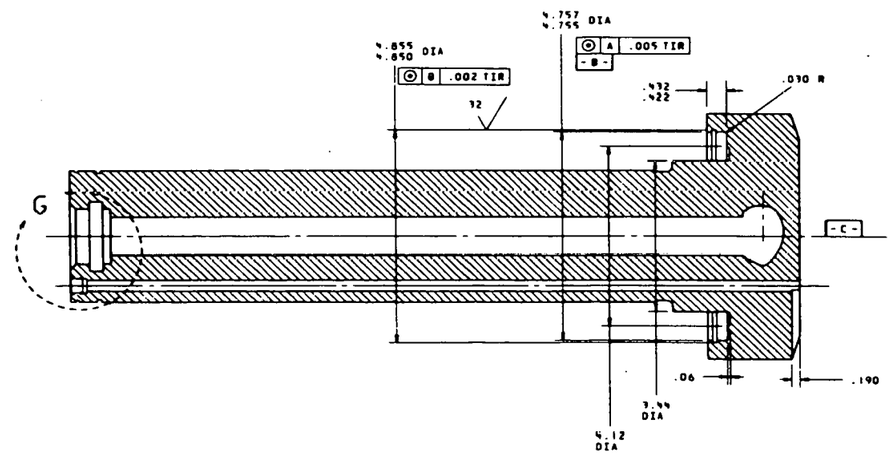

SECTION C - C

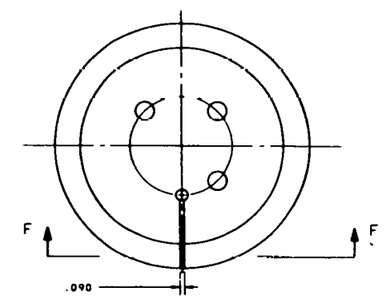

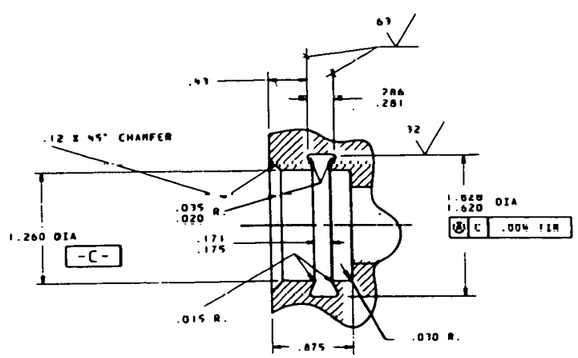

DETAIL G
SCALE 2/1

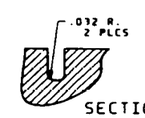

SECTION F-F
SCALE 4/1

SIZE	FSCM NO.	DRAWING NO.	REV
E	17077	65268	
SCALE NOTED		SHEET 2	

65268

STDLIB

SK 65268.02.01
905IEE...

ALLENSCOAL FEEDER, COAL FEED TUBE

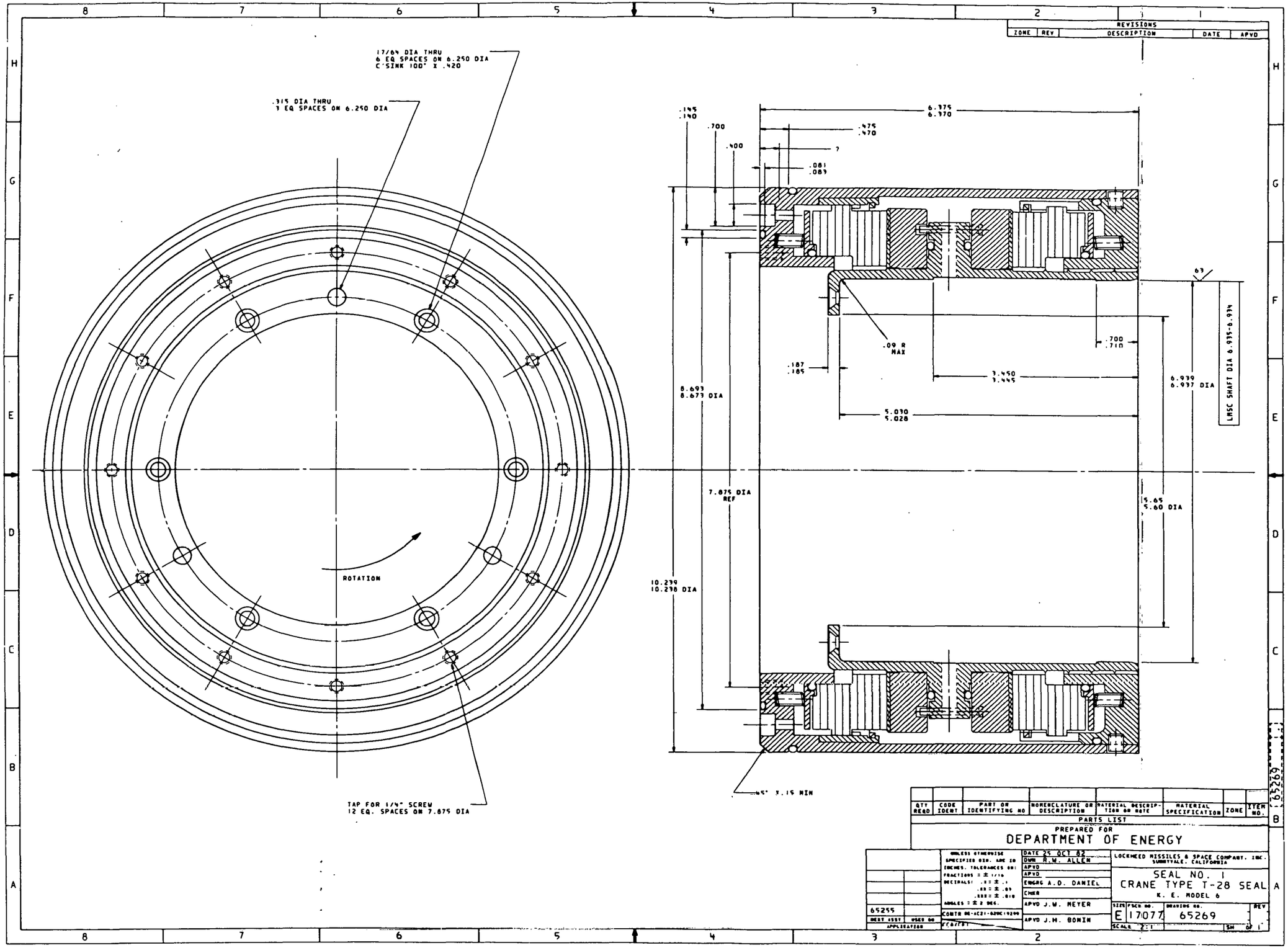

26

MSDD,81-33E
11-18-83

STDLIB

SK 65269,01,,01
9051E,,,

ALLEN$COAL FEEDER, SEAL, CRANE TYPE T-28, NO. 1

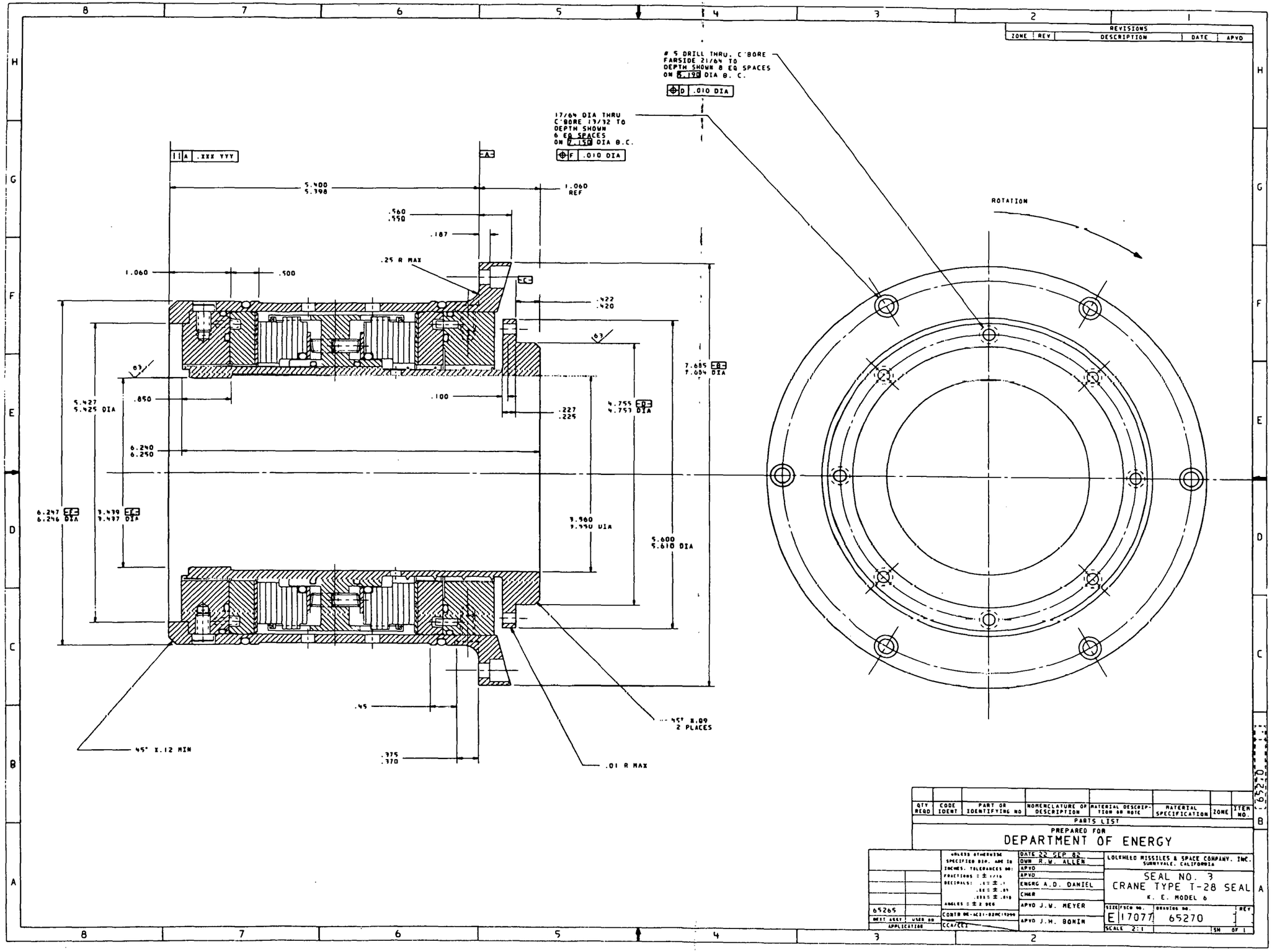

27

MSDD.81-33E
11-18-83

STDLIB

SK 65270.01.01
9051E...

ALLEN$COAL FEEDER, SEAL, CRANE TYPE T-28, NO. 3

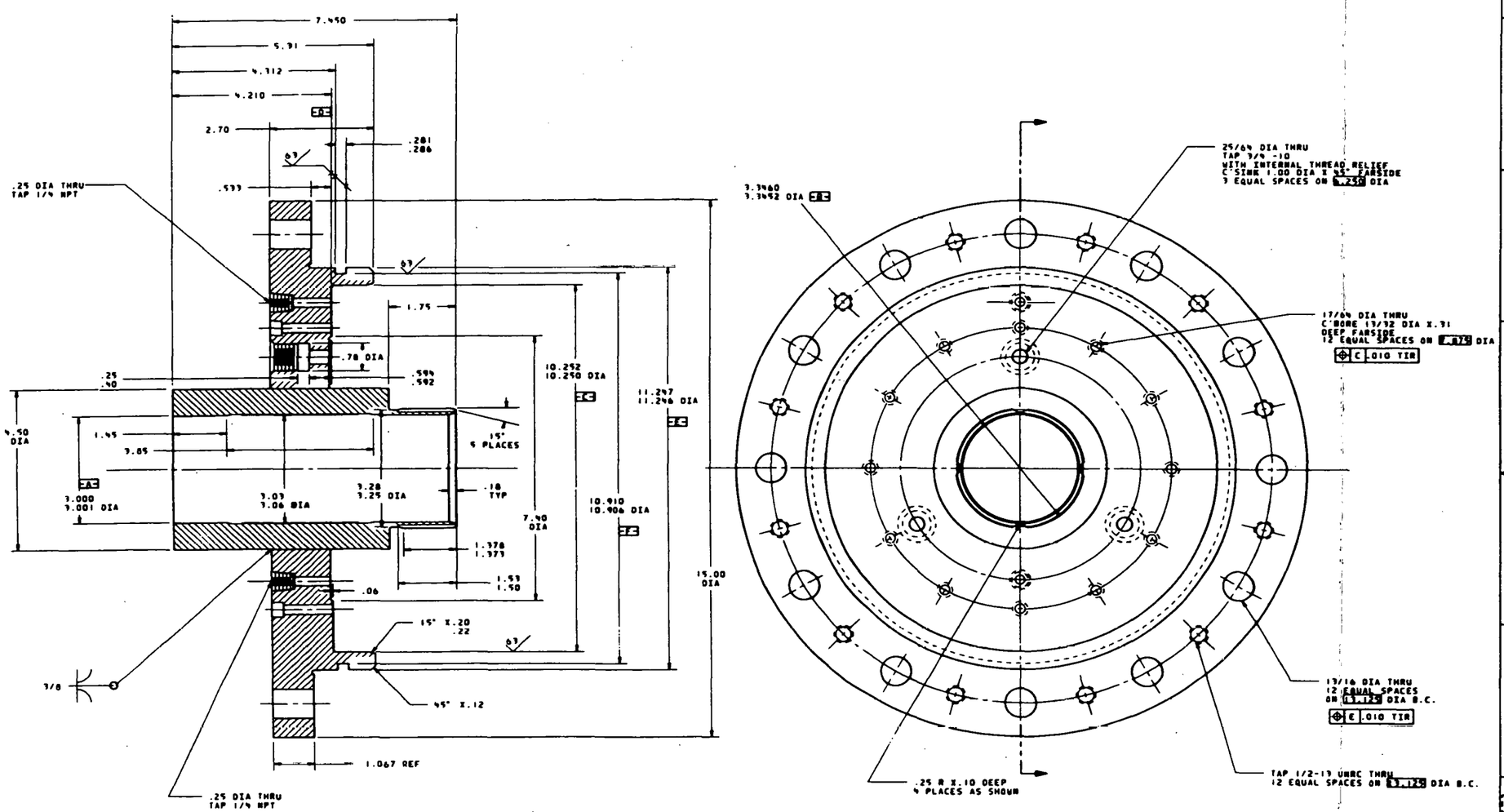

NOTE:

1. DIAS A.B.C.F TO BE CONCENTRIC WITH DIA E WITHIN .001 TIR.
2. ALL RADII .06 UNLESS OTHERWISE NOTED
3. DIAS A.B.C.E TO BE PERPENDICULAR WITH SURFACE D WITHIN .0005 TIR.

QTY REQD	CODE IDENT	PART OR IDENTIFYING NO	NOMENCLATURE OR DESCRIPTION	MATERIAL DESCRIPTION OR NOTE	MATERIAL SPECIFICATION	ZONE	ITEM NO.
				PLATE	304 SST		2
				ROUND	304 SST		1

PARTS LIST

PREPARED FOR
DEPARTMENT OF ENERGY

UNLESS OTHERWISE SPECIFIED DIM. ARE IN INCHES. TOLERANCES .001 FRACTIONS = ± 1/16 DECIMALS: .X = ± .1 .XX = ± .03 .XXX = ± .010 ANGLES = ± 2 DEG.

65265
NEXT ASSY USED ON
APPLICATION

DATE & CKT BY
DWN R.W. ALLEN
APVD
APVD
ENGRG A.D. DANIEL
CHKR
APVD J.W. MEYER
APVD J.H. BONIN

LOCKHEED MISSILES & SPACE COMPANY, INC.
SUNNYVALE, CALIFORNIA

END PLATE
FEED
F. E. MODEL 6

SIZE E FSCM NO. 17077 DRAWING NO. 65271 REV
SCALE 1:1 SH 1 OF 1

A-29

MSDD 81-33E
9-30-83

STDLIB

SK 65271.01..04
9051E...

ALLEN$COAL FEEDER, END PLATE. FEED SIDE

29

MSDD.81-33E
11-18-83

REVISIONS				
ZONE	REV	DESCRIPTION	DATE	APVD

NOTES:

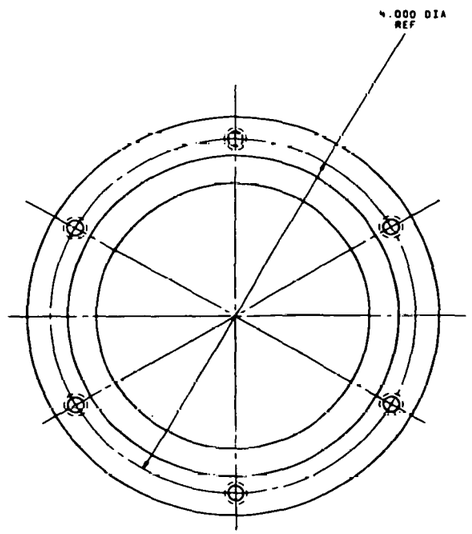

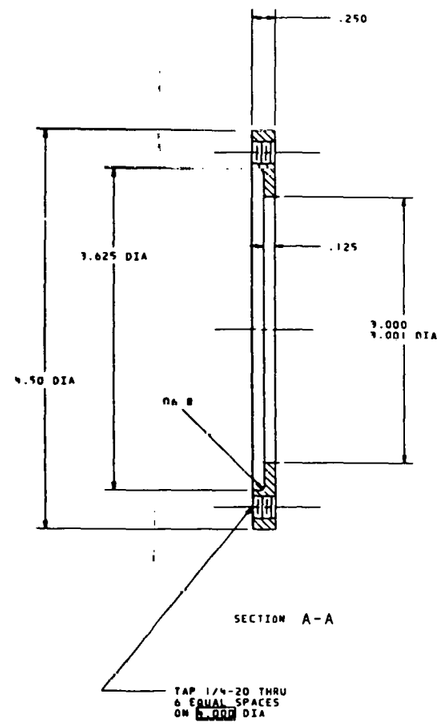

QTY REQD	CODE IDENT	PART OR IDENTIFYING NO	NOMENCLATURE OR DESCRIPTION	MATERIAL DESCRIPTION OR NOTE	MATERIAL SPECIFICATION	ZONE	ITEM NO.
1			RETAINER-TUBE	316/304 SST			1

PARTS LIST

PREPARED FOR
DEPARTMENT OF ENERGY

LOCKHEED MISSILES & SPACE COMPANY, INC
SUNNYVALE, CALIFORNIA

RETAINER
FEED TUBE
K. E. MODEL 6

DATE 25 OCT 82
DWN R.W. ALLEN
APVD
APVD
ENGRG A.D. DANIEL
CHKR
APVD J.W. MEYER
APVD J.M. BONIN

UNLESS OTHERWISE SPECIFIED DIM. ARE IN INCHES. TOLERANCES ON: FRACTIONS ± 1/16 DECIMALS: .XX ± .1 .XX ± .05 .XXX ± .010 ANGLES ± 2 DEG.

CONTR DE-AC21-82MC19299

CCA/LCL

65265 NEXT ASSY USED ON APPLICATION

SIZE E FSCM NO. 17077 DRAWING NO 65272 REV

SCALE 2:1 SH 1 OF 1

65272

STDLIB

SK 65272.01..01
9051E...

ALLENSCOAL FEEDER, RETAINER-TUBE, K.E. MODEL 6

30

MSDD.81-33E
11-18-83

REVISIONS				
ZONE	REV	DESCRIPTION	DATE	APVD

NOTES:

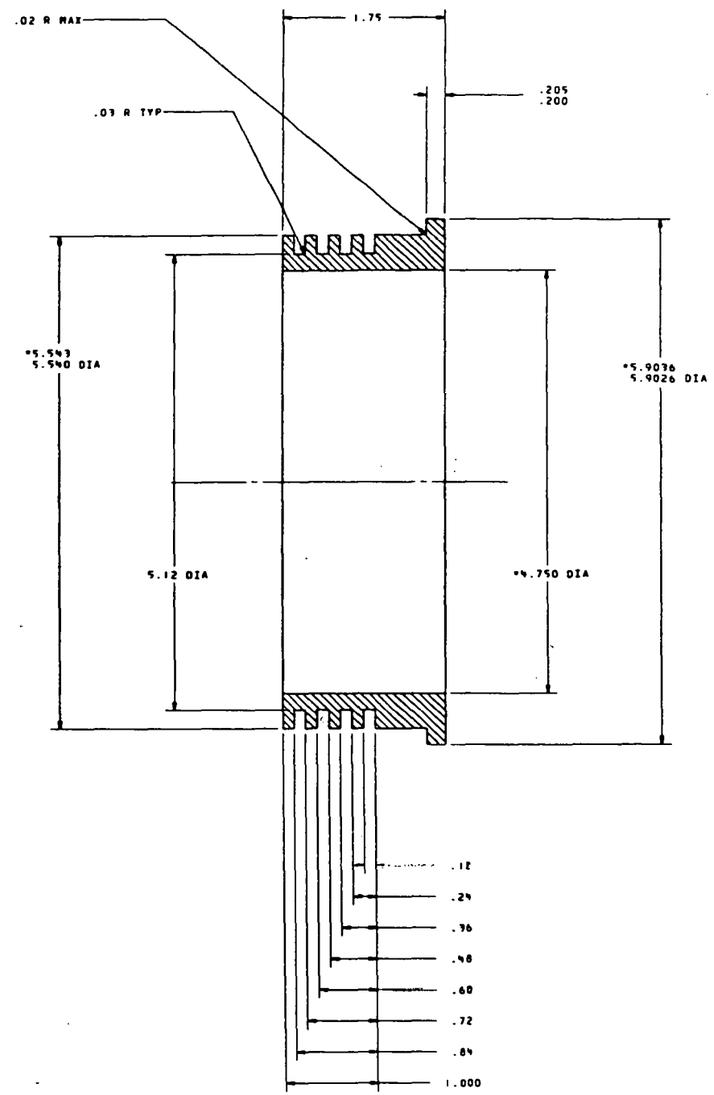

* DIA CONCENTRIC WITHIN .001 TIR

QTY REQD	CODE IDENT	PART OR IDENTIFYING NO	NOMENCLATURE OR DESCRIPTION	MATERIAL DESCRIPTION OR NOTE	MATERIAL SPECIFICATION	ZONE	ITEM NO.
1			FIN. THERMAL	6061 T6 AL			2
							1

PARTS LIST

PREPARED FOR
DEPARTMENT OF ENERGY

UNLESS OTHERWISE SPECIFIED DIM. ARE IN INCHES. TOLERANCES ON: FRACTIONS = ± 1/16 DECIMALS: .X = ± .1 .XX = ± .03 .XXX = ± .010 ANGLES = ± 2 DEG.

DATE 15 NOV 83
DWN R.W. ALLEN
APVD
APVD
ENGRG A.D. DANIEL
CHKR
APVD J.W. MEYER
APVD J.H. BOWIN

LOCKHEED MISSILES & SPACE COMPANY, INC.
SUNNYVALE, CALIFORNIA

FIN. THERMAL

K. E. MODEL 6

SIZE E | PSCA NO. 17077 | DRAWING NO. 65273 | REV

SCALE 2:1 | SH 1 OF 1

65269
NEXT ASSY | USED ON
APPLICATION

CONTR NO-KC31-03MC19209
CC47CE1

A-31

SK 65273.01..01
9051E...

STDLIB

ALLEN$COAL FEEDER, THERMAL FIN, K.E.MODEL 6

NOTES:

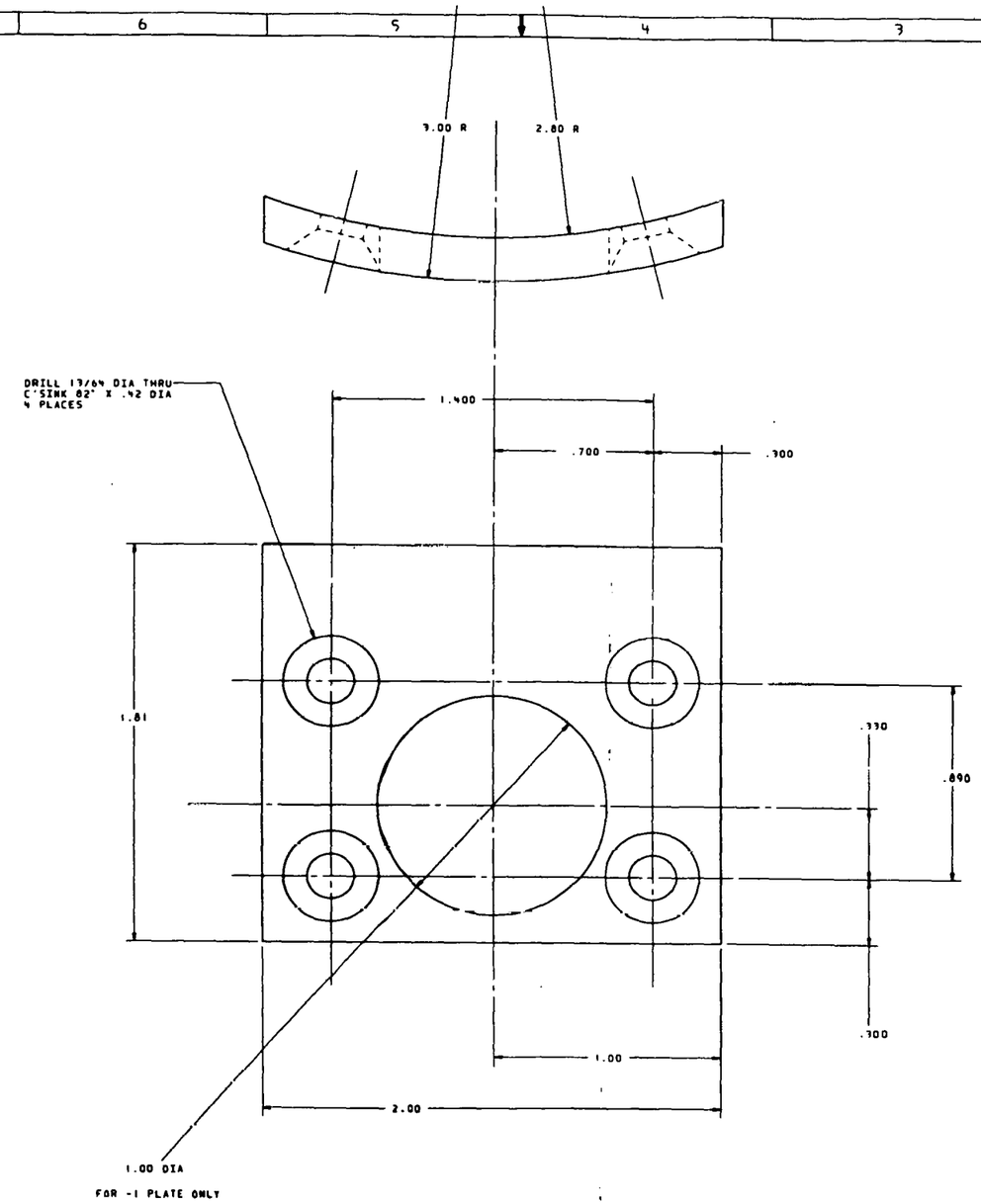

REVISIONS				
ZONE	REV	DESCRIPTION	DATE	APVD

QTY REQD	CODE IDENT	PART OR IDENTIFYING NO	NOMENCLATURE OR DESCRIPTION	MATERIAL DESCRIPTION OR NOTE	MATERIAL SPECIFICATION	ZONE	ITEM NO.
		65274-3	WEAR PLATE	4130 STEEL			2
1		65274-1	WEAR PLATE	4130 STEEL			1

PARTS LIST

PREPARED FOR
DEPARTMENT OF ENERGY

UNLESS OTHERWISE SPECIFIED DIM. ARE IN INCHES. TOLERANCES ON: FRACTIONS = ± 1/16 DECIMALS: .X = ± .1 .XX = ± .03 .XXX = ± .010 ANGLES = ± 2 DEG.

DATE 15 NOV 83
DWN R.W. ALLEN
APVD
APVD
ENGRG A.D. DANIEL
CHKR
APVD J.W. MEYER
APVD J.H. BONIN

LOCKHEED MISSILES & SPACE COMPANY, INC. SUNNYVALE, CALIFORNIA

WEAR PLATE

K. E. MODEL 6

SIZE E FSCM NO. 17077 DRAWING NO. 65274 REV

SCALE 2:1 SH 1 OF 1

65268
NEXT ASSY USED ON
APPLICATION

KONTR DE-AC21-82MC19299
KCA/CEI

MSDD.81-33E
11-18-83

31

STDLIB

SK 65274.01,,01
9051E,,,

ALLENSCOAL FEEDER, WEAR PLATES, K.E.MODEL 6

32

MSDD,81-33E
11-18-83

REVISIONS				
ZONE	REV	DESCRIPTION	DATE	APVD

NOTES:

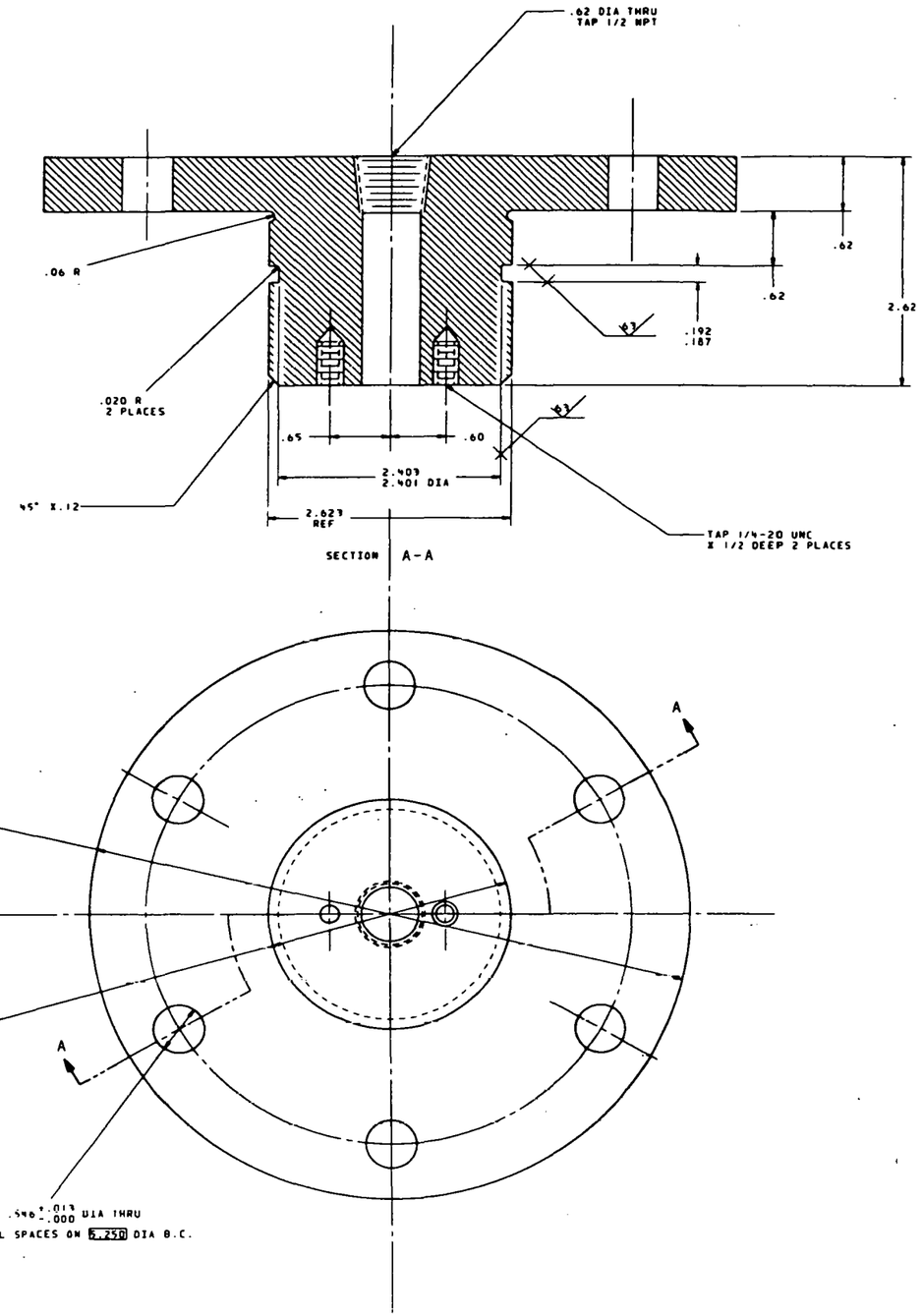

QTY REQD	CODE IDENT	PART OR IDENTIFYING NO	NOMENCLATURE OR DESCRIPTION	MATERIAL DESCRIPTION OR NOTE	MATERIAL SPECIFICATION	ZONE	ITEM NO.
				304/316 SST	(ANN)		1

PARTS LIST

PREPARED FOR
DEPARTMENT OF ENERGY

LOCKHEED MISSILES & SPACE COMPANY, INC.
SUNNYVALE, CALIFORNIA

PLUG
FLOW DETECTOR
K. E. MODEL 6

DATE	10 OCT 82
DWN	R.W. ALLEN
APVD	
APVD	
ENGRG	A.D. DANIEL
CHKR	
APVD	J.W. MEYER
APVD	J.H. BONIN

SIZE E FSCM NO. 17077 DRAWING NO. 65275 REV

SCALE 2:1 SH OF 1

652XX

NEXT ASSY USED ON
APPLICATION

CONTR NO. AC01-82PNL10294
CC/CL1

STDLIB

SK 65275,01,01
905IE,,,

ALLEN$COAL FEEDER, PLUG, FLOW DETECTOR

REVISIONS				
ZONE	REV	DESCRIPTION	DATE	APVD

NOTES:

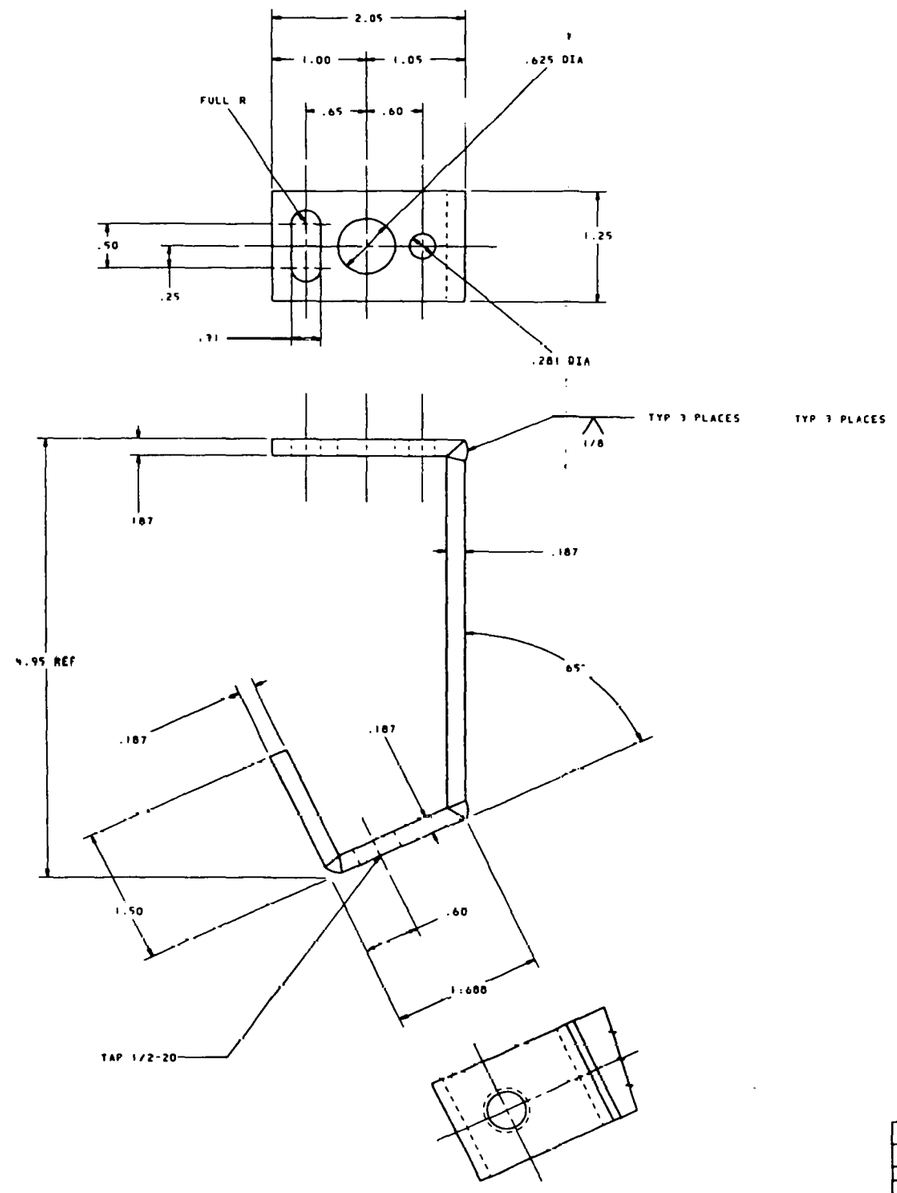

QTY REQD	CODE IDENT	PART OR IDENTIFYING NO	3/16 SHEET NOMENCLATURE OR DESCRIPTION	1018 STL MATERIAL DESCRIPTION OR NOTE	MATERIAL SPECIFICATION	ZONE	ITEM NO.

PARTS LIST

PREPARED FOR
DEPARTMENT OF ENERGY

UNLESS OTHERWISE SPECIFIED DIM. ARE IN INCHES. TOLERANCES ON: FRACTIONS = ± 1/16 DECIMALS: .X = ± .1 .XX = ± .03 .XXX = ± .010 ANGLES = ± 2 DEG.

DATE 11 OCT 82
DWN R.W. ALLEN
APVD
APVD
ENGRG A.D. DANIEL
CHKR
APVD J.W. MEYER
APVD J.H. BONIN

LOCKHEED MISSILES & SPACE COMPANY, INC.
SUNNYVALE, CALIFORNIA

BRACKET
FLOW DETECTOR
K. E. MODEL 6

SIZE E | FSCM NO. 17077 | DRAWING NO. 65277 | REV

SCALE 2:1 | SH 1 OF 1

65277
NEXT ASSY | USED ON
APPLICATION

CONTR NO. NCB1-020C19399
CCA/CEL

34

MSDD.81-33E
11-18-83

STDLIB

SK 65277.01.01
9051E...

ALLEN$COAL FEEDER, BRACKET, FLOW DETECTOR

MSDD,81-33E
11-18-83

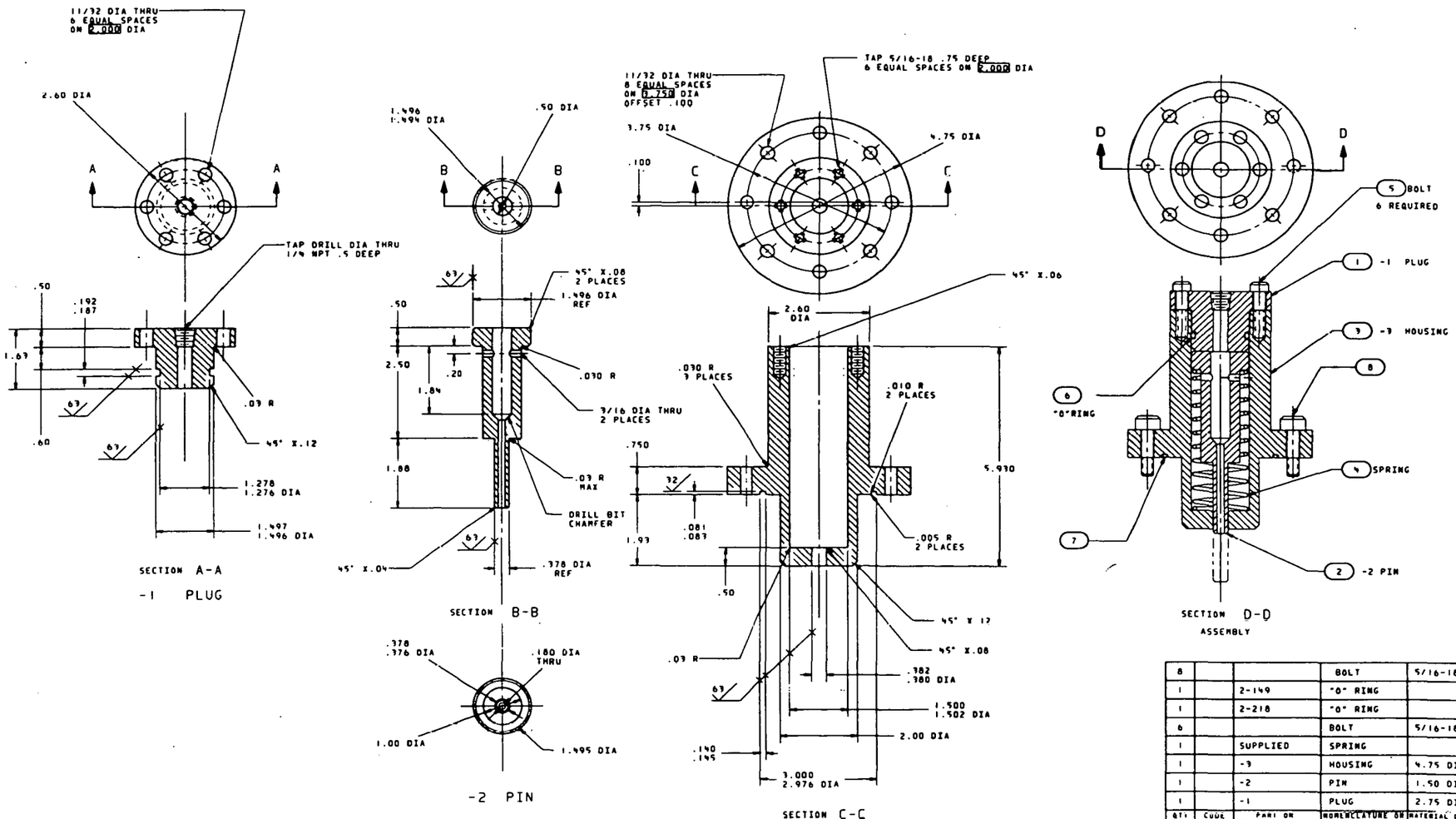

QTY REQD	CODE IDENT	PART OR IDENTIFYING NO	NOMENCLATURE OR DESCRIPTION	MATERIAL DESCRIPTION OR NOTE	MATERIAL SPECIFICATION	ZONE	ITEM NO.
8			BOLT	5/16-18	1.25 LONG		8
1		2-149	"O" RING		BUNA-N		7
1		2-218	"O" RING		BUNA-N		6
6			BOLT	5/16-18	1.0 LONG		5
1		SUPPLIED	SPRING				4
1		-3	HOUSING	4.75 DIA ROD	304/316 SST		3
1		-2	PIN	1.50 DIA ROD	304/316 SST		2
1		-1	PLUG	2.75 DIA ROD	304/316 SST		1

PARTS LIST

PREPARED FOR
DEPARTMENT OF ENERGY

UNLESS OTHERWISE SPECIFIED DIM. ARE IN INCHES. TOLERANCES ON: FRACTIONS = ± 1/16 DECIMALS: .X = ± .1 .XX = ± .03 .XXX = ± .010 ANGLES = ± 2 DEG.

65278

NEXT ASSY | USED ON
APPLICATION

CONTR DE-AC21-82MC19299

DATE 3 OCT 82
DWN R.W. ALLEN
APVD
APVD
ENGRG A.D. DANIEL
CHKR
APVD J.M. MEYER
APVD J.H. BONIN

LOCKHEED MISSILES & SPACE COMPANY, INC.
SUNNYVALE, CALIFORNIA

UNPLUGGER
RETRACTING
K. E. MODEL 6

SIZE E | FSCM NO. 17077 | DRAWING NO. 65278 | REV

SCALE 1:1 | SH 1 OF 1

STDLIB

SK 65278.01,.01
905IE...

ALLEN$COAL FEEDER, DEPLUGGER, RETRACTING

MSDD.81-33E
11-18-83

NOTES:

1. CLAMP PARTS TOGETHER. SHAFT STRAIGHTNESS OF ASSEMBLY SHOULD BE WITHIN .004 TIR OVER ENTIRE LENGTH.

2. UNBRAKO OR EQUIVALENT

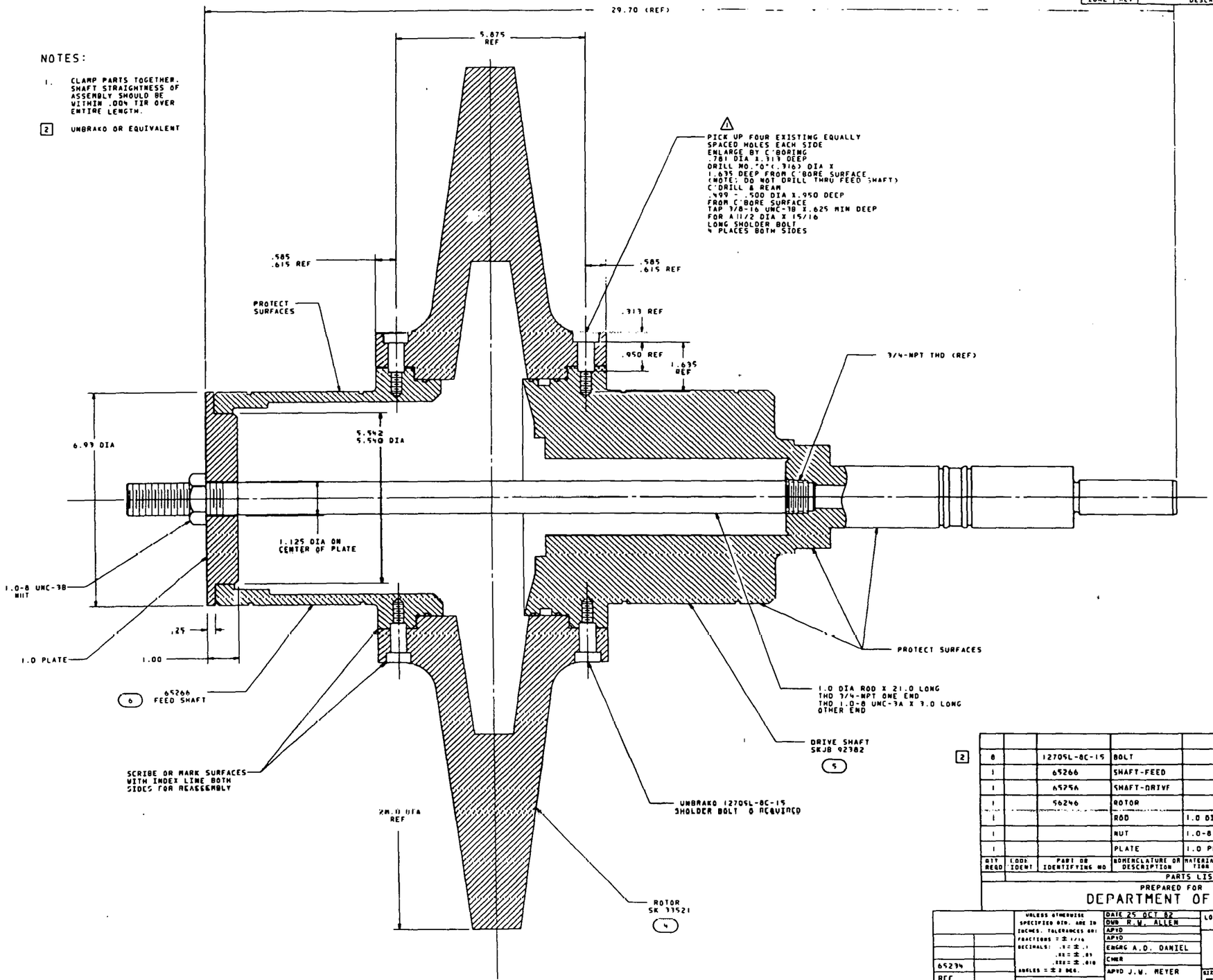

QTY REQD	LOOK IDENT	PART OR IDENTIFYING NO	NOMENCLATURE OR DESCRIPTION	MATERIAL DESCRIPTION OR NOTE	MATERIAL SPECIFICATION	ZONE	ITEM NO.
8		12705L-8C-15	BOLT			4/4	7
1		65266	SHAFT-FEED			F/8	6
1		65256	SHAFT-DRIVE			B/4	5
1		56246	ROTOR			B/4	4
1			ROD	1.0 DIA X 21.0		C/4	3
1			NUT	1.0-8 UNC-3B		D/8	2
1			PLATE	1.0 PLATE	STL	C/8	1

PARTS LIST

PREPARED FOR
DEPARTMENT OF ENERGY

UNLESS OTHERWISE SPECIFIED DIM. ARE IN INCHES. TOLERANCES ON: FRACTIONS = ± 1/16 DECIMALS: .X = ± .1 .XX = ± .03 .XXX = ± .010 ANGLES = ± 2 DEG.

DATE 25 OCT 82
DWN R.W. ALLEN
APVD
APVD
ENGRG A.D. DANIEL
CHKR
APVD J.W. MEYER
APVD J.H. BONIN

LOCKHEED MISSILES & SPACE COMPANY, INC. SUNNYVALE, CALIFORNIA

SHAFT ASSEMBLY
K. E. MODEL 6

SIZE E FSCM NO. 17077 DRAWING NO. 65280 REV

SCALE 1:2 SH 1 OF 1

65234
REF
NEXT ASSY USED ON
APPLICATION

CCA/CEI

65280

STDLIB

SK 65280.01.01
9051E...

ALLEN$COAL FEEDER, SHAFT ASSEMBLY

NOTES:

1. MAKE CAP ASSEMBLY TO FIT PCB 121A02 TRANSDUCER

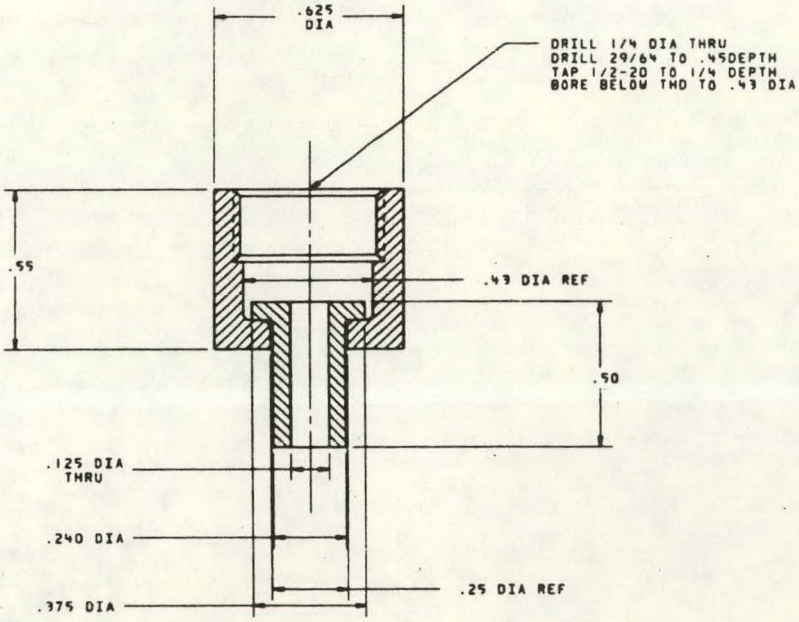

QTY REQD	CODE IDENT	PART OR IDENTIFYING NO	NOMENCLATURE OR DESCRIPTION	MATERIAL DESCRIPTION OR NOTE	MATERIAL SPECIFICATION	ZONE	ITEM NO.
1			CAP ASSY	4130 STEEL			1

PARTS LIST

PREPARED FOR
DEPARTMENT OF ENERGY

	UNLESS OTHERWISE SPECIFIED DIM. ARE IN INCHES. TOLERANCES ON: FRACTIONS = ± 1/16 DECIMALS: .X = ± .1 .XX = ± .03 .XXX = ± .010 ANGLES = ± 2 DEG.	DATE 15 NOV 83	LOCKHEED MISSILES & SPACE COMPANY, INC. SUNNYVALE, CALIFORNIA
		DWN R.W. ALLEN	
		APVD	CAP, TRANSDUCER ASSEMBLY
		APVD	
		ENGRG A.D. DANIEL	K. E. MODEL 6
		CHKR	
65234		APVD J.W. MEYER	SIZE E FSCM NO. 17077 DRAWING NO. 65281 REV
NEXT ASSY	USED ON	CONTR DE-AC21-82MC19299	
APPLICATION		APVD J.H. BONIN	
		CCA/CEI	SCALE 2:1 SH 1 OF 1

Appendix B

ASSEMBLY AND DISASSEMBLY PROCEDURE FOR THE MODEL NO. 6 KINETIC EXTRUDER

As indicated in Fig. B-1, the Kinetic Extruder consists of four major parts or subassemblies:

(1) The drive side subassembly
(2) The feed side subassembly
(3) The rotor subassembly
(4) The housing

Assembly

The assembly procedure is shown in Figs. B-2 through B-19. The parts are identified by the drawing number 652XX.

Assembly of the drive side subassembly is shown in Figs. B-2 through B-9. Assembly of the feed side subassembly is shown in Figs. B-10 through B-14. Assembly of the rotor subassembly is shown in Figs. B-15 through B-16. Installation of the three subassemblies into the housing is shown in Figs. B-17 through B-19.

Disassembly

The disassembly procedure is shown in Figs. B-20 through B-36. Removal of the major subassemblies from the housing is shown in Figs. B-20 through B-22. Disassembly of the rotor is shown in Figs. B-23 and B-24. Disassembly of the feed side subassembly is shown in Figs. B-25 through B-29. Disassembly of the drive side subassembly is shown in Figs. B-30 through B-36.

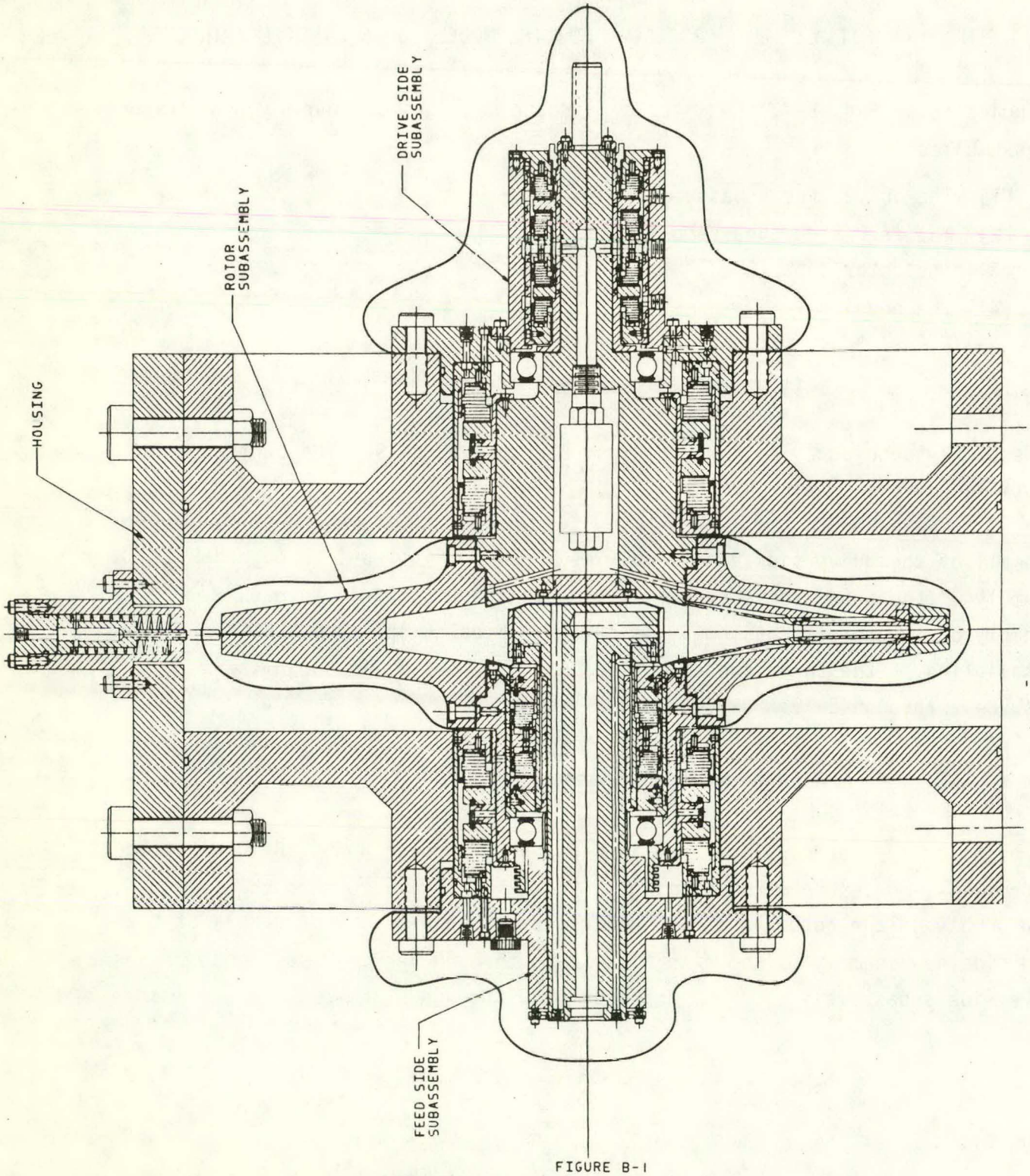

FIGURE B-1
MAJOR SUB-ASSEMBLIES OF THE KINETIC EXTRUDER

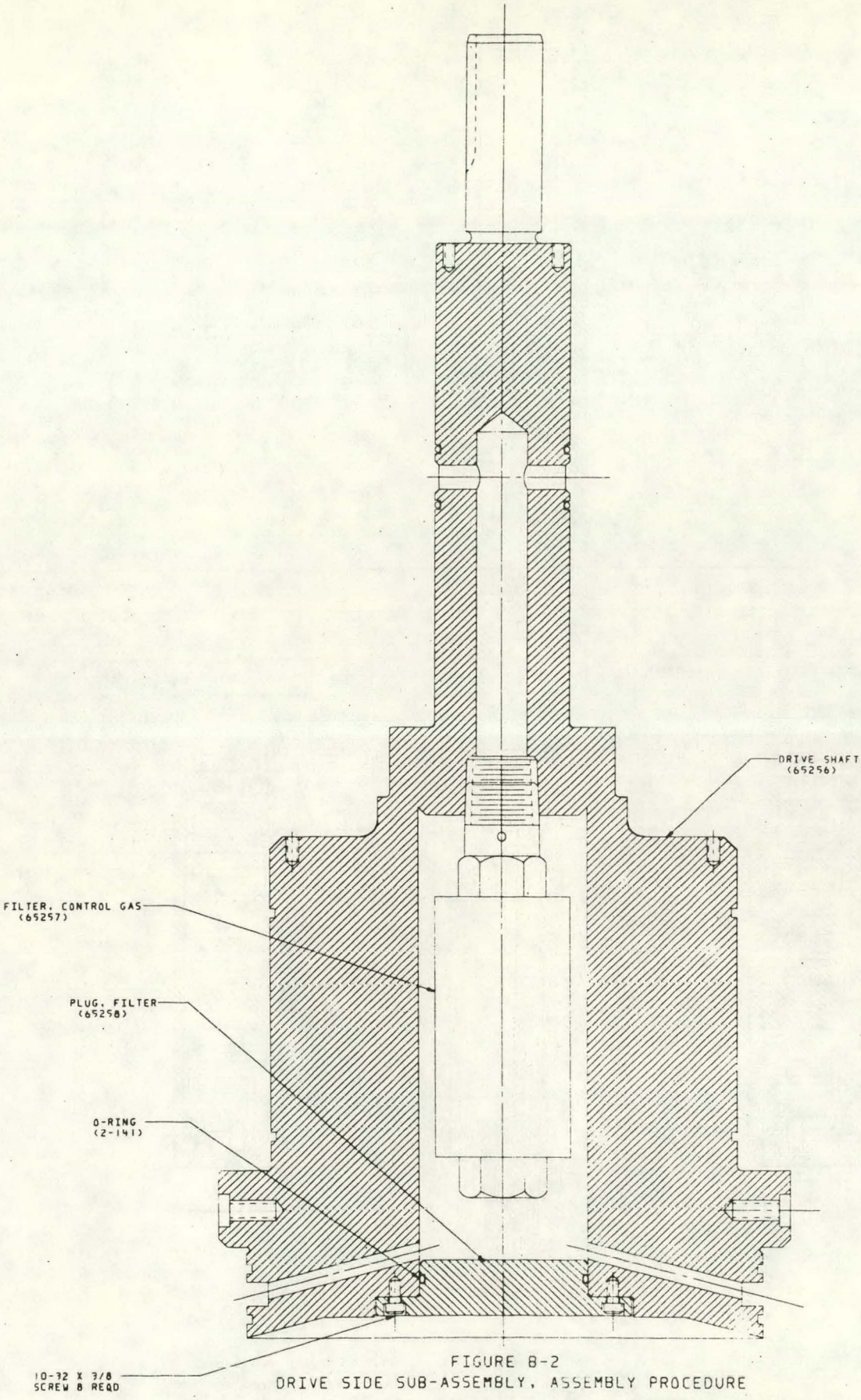

FIGURE B-2
DRIVE SIDE SUB-ASSEMBLY, ASSEMBLY PROCEDURE

STEP 1: INSTALL FILTER. INSTALL & FASTEN FILTER PLUG IN DRIVE SHAFT

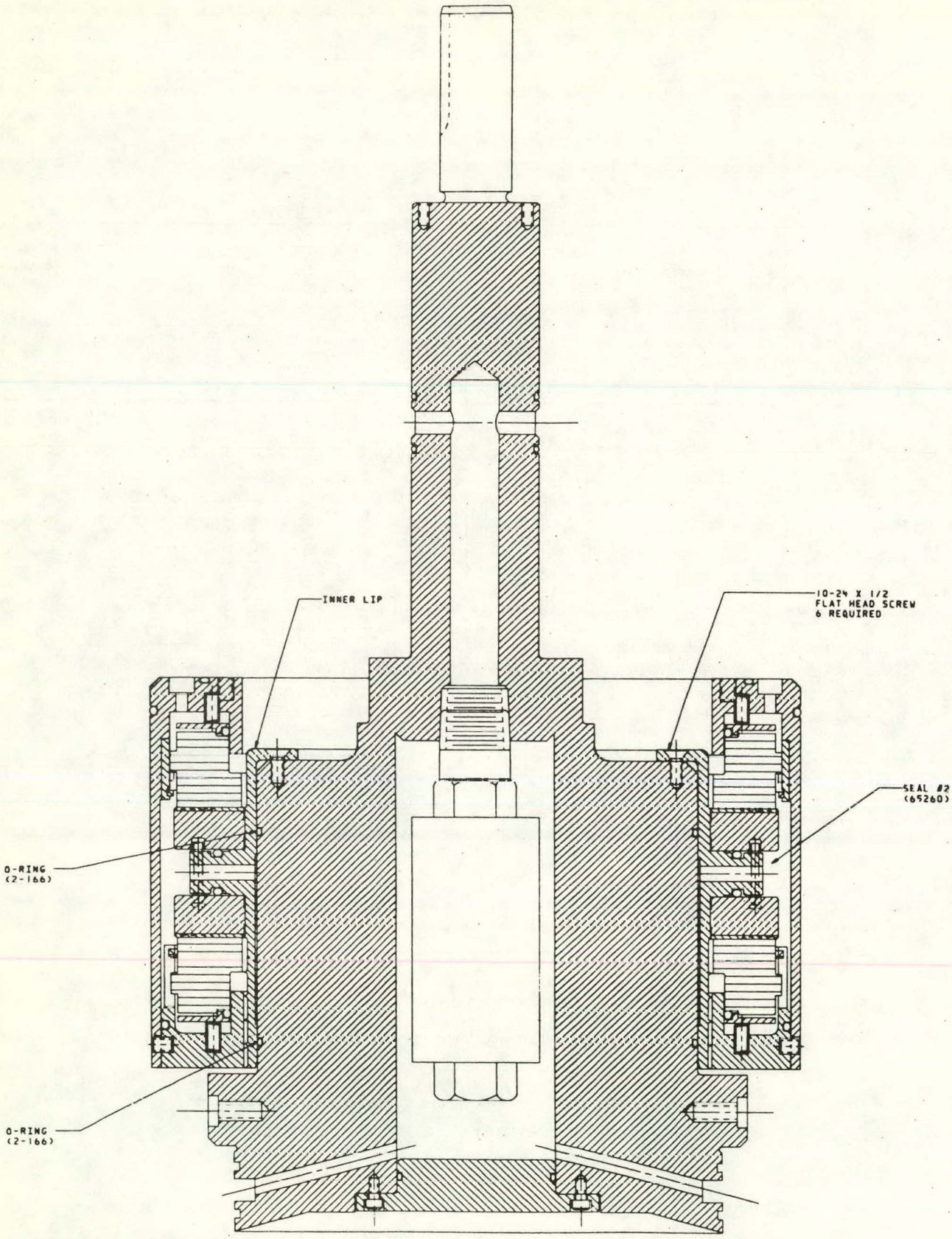

FIGURE B-3
DRIVE SIDE SUB-ASSEMBLY, ASSEMBLY PROCEDURE
STEP 2: INSTALL & FASTEN SEAL #2 ONTO DRIVE SHAFT.
PUSHING ON INNER LIP.

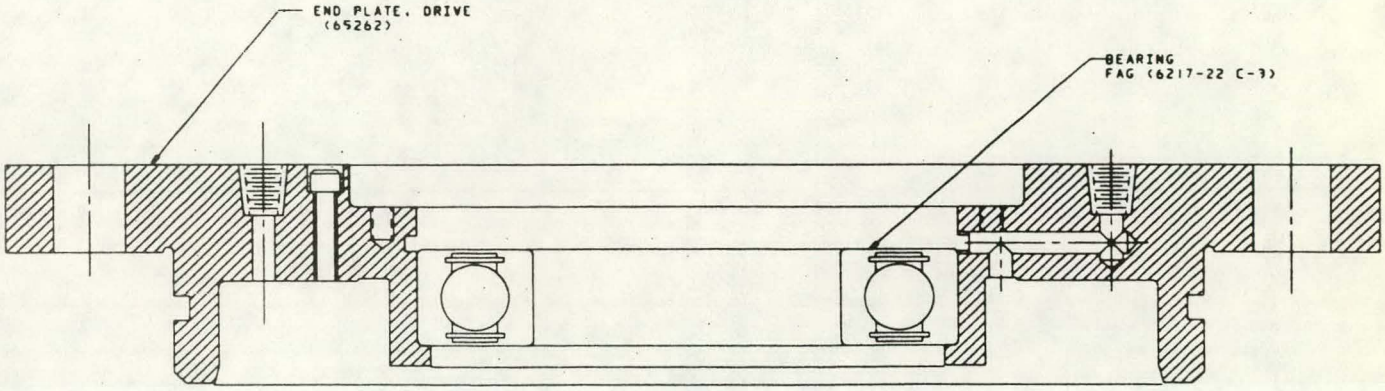

FIGURE B-4

DRIVE SIDE SUB-ASSEMBLY, ASSEMBLY PROCEDURE

STEP 3: INSTALL BEARING IN END PLATE
USING INSTALLATION TOOL & PRESS

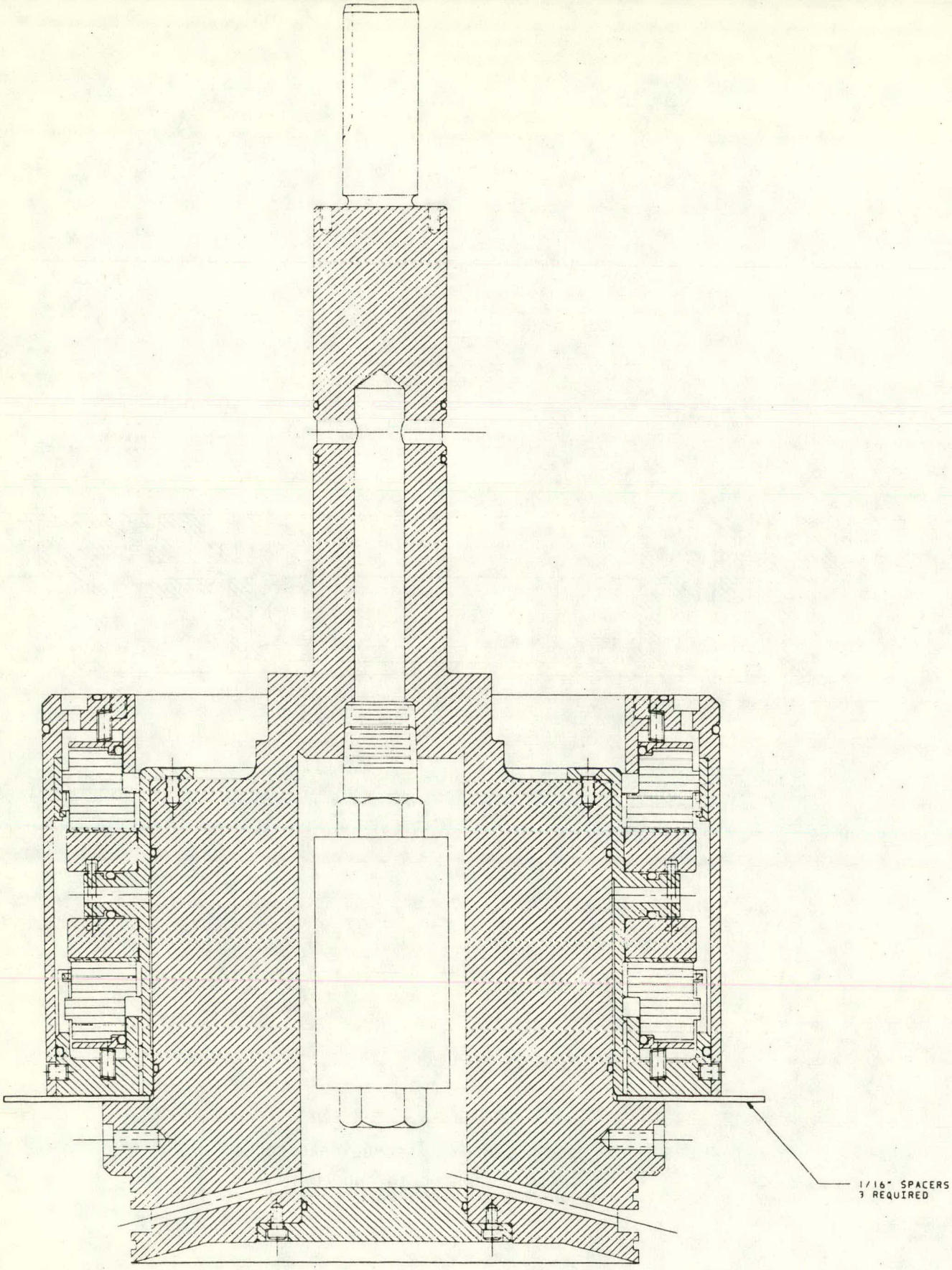

FIGURE B-5
DRIVE SIDE SUB-ASSEMBLY, ASSEMBLY PROCEDURE
STEP 4: INSTALL 1/16" SPACERS

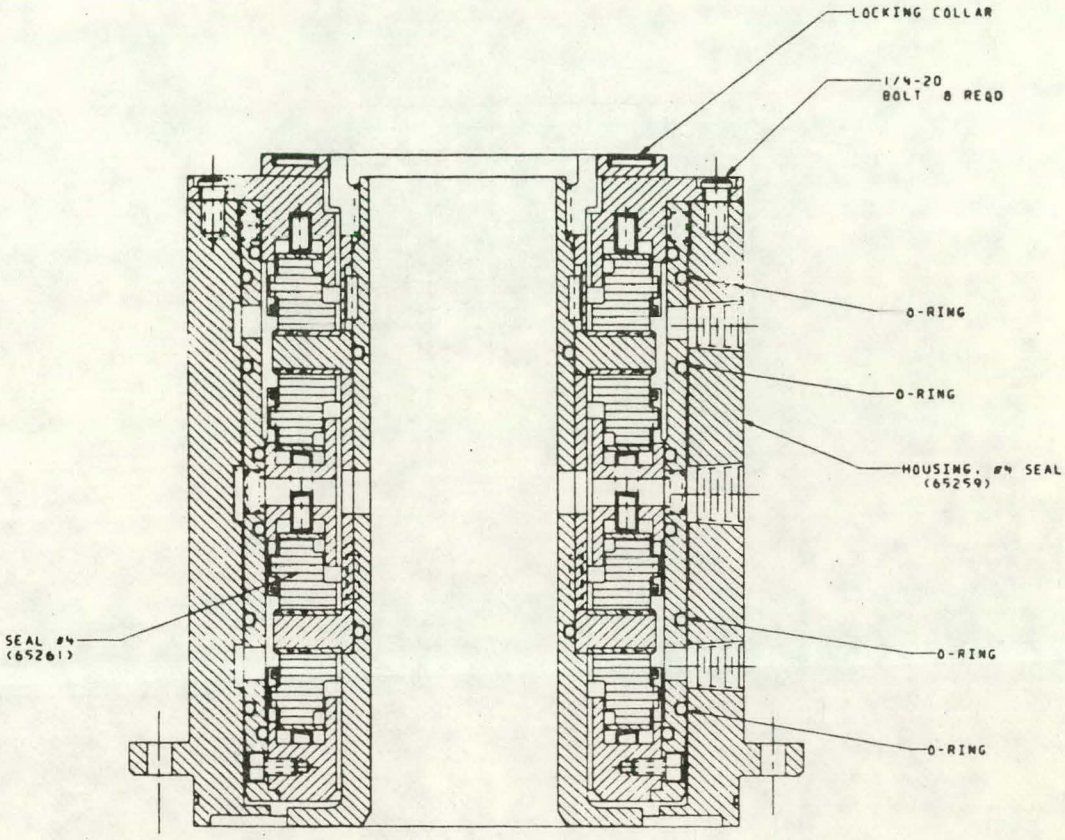

FIGURE B-6
FEED SIDE SUBASSEMBLY, ASSEMBLY PROCEDURE

STEP 5: INSTALL & FASTEN SEAL #4 INTO HOUSING USING 2 EA JACKING SCREWS

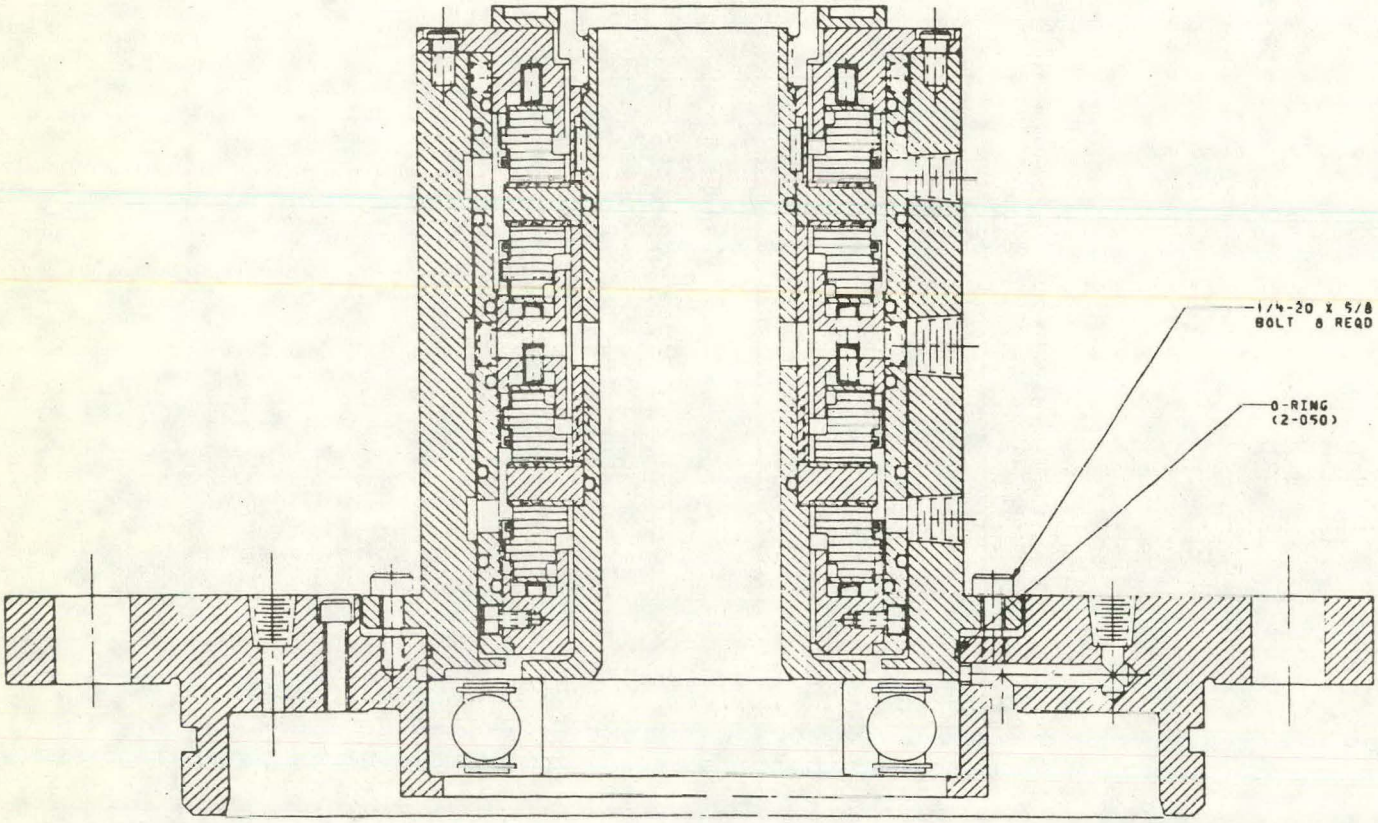

FIGURE B-7

DRIVE SIDE SUB-ASSEMBLY, ASSEMBLY PROCEDURE

STEP 6: INSTALL & FASTEN SEAL #4 TO END PLATE

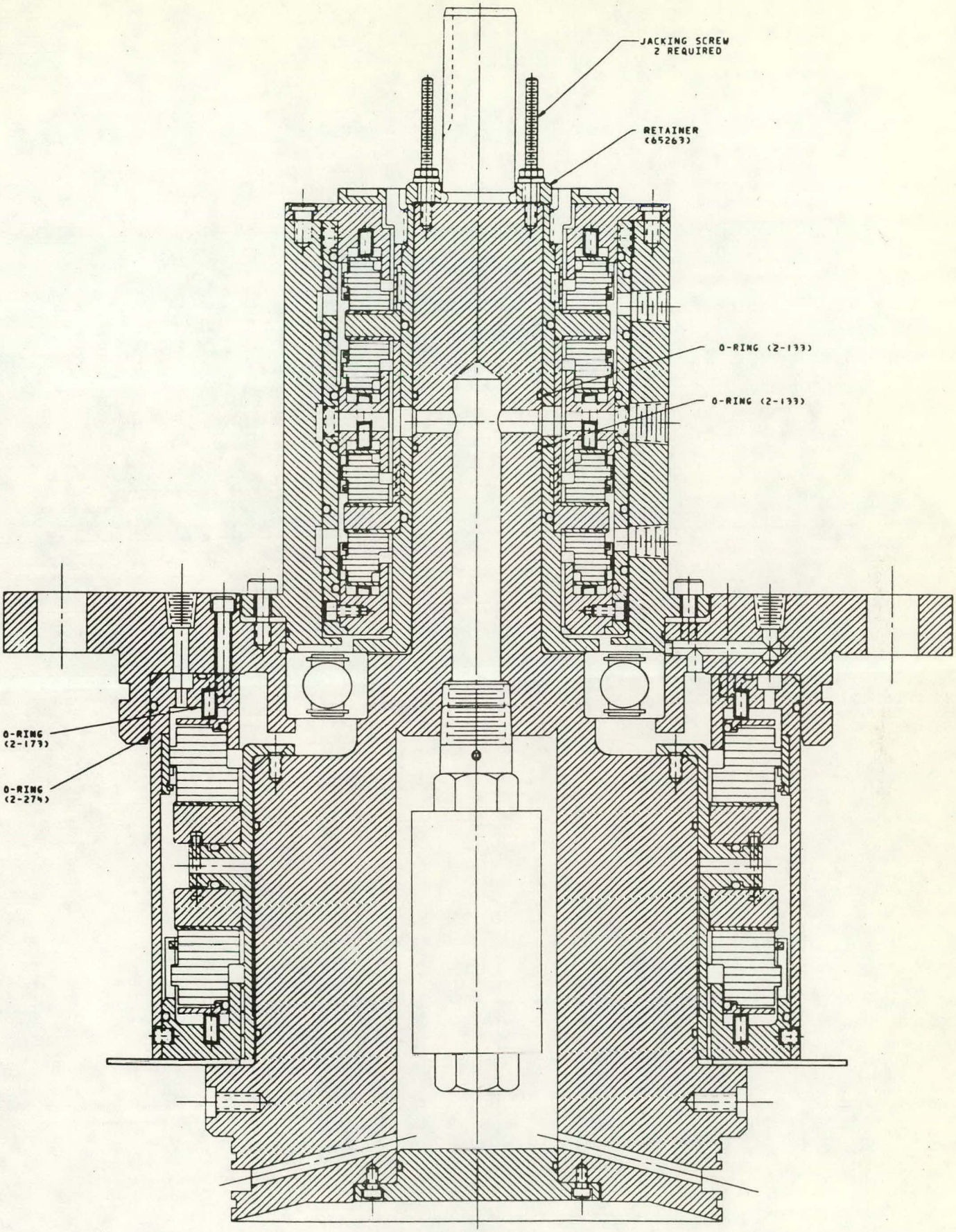

FIGURE B-8

DRIVE SIDE SUB-ASSEMBLY, ASSEMBLY PROCEDURE
STEP 7: INSTALL END PLATE ON SHAFT USING RETAINER AND JACKING SCREWS.

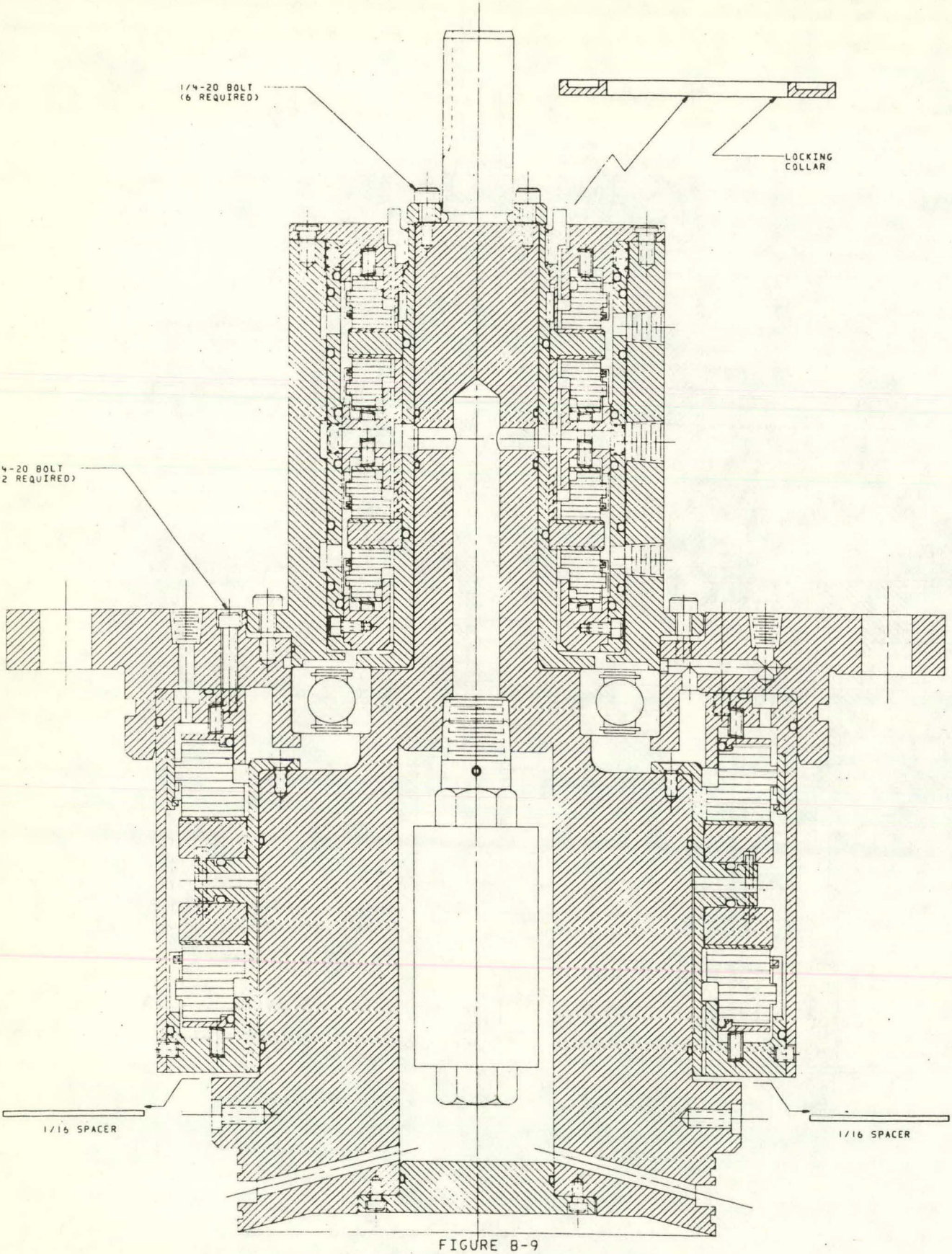

FIGURE B-9

DRIVE SIDE SUB-ASSEMBLY, DISASSEMBLY PROCEDURE

STEP 8: FASTEN SEAL NO. 2. REMOVE 1/16" SPACERS. AFTER INSTALLATION (SEE FIGURE B-18) UNFASTEN & REMOVE LOCKING COLLAR (LEFT-HAND THREAD) FASTEN RETAINER.

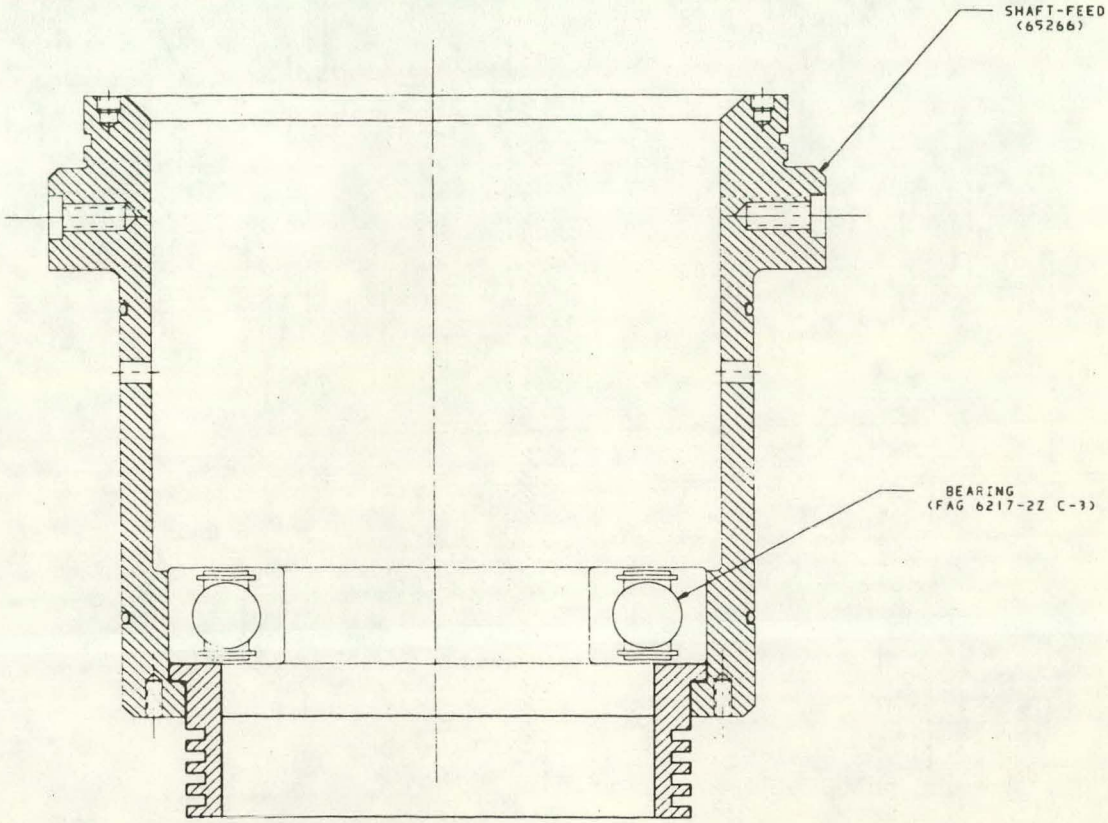

FIGURE B-10

FEED SIDE SUB-ASSEMBLY, ASSEMBLY PROCEDURE

STEP 1: INSTALL THERMAL FIN & BEARING INTO FEED-SHAFT.
HEAT FEED-SHAFT TO EASE ASSEMBLY
USE ASSEMBLY TOOL & PRESS IF REQD

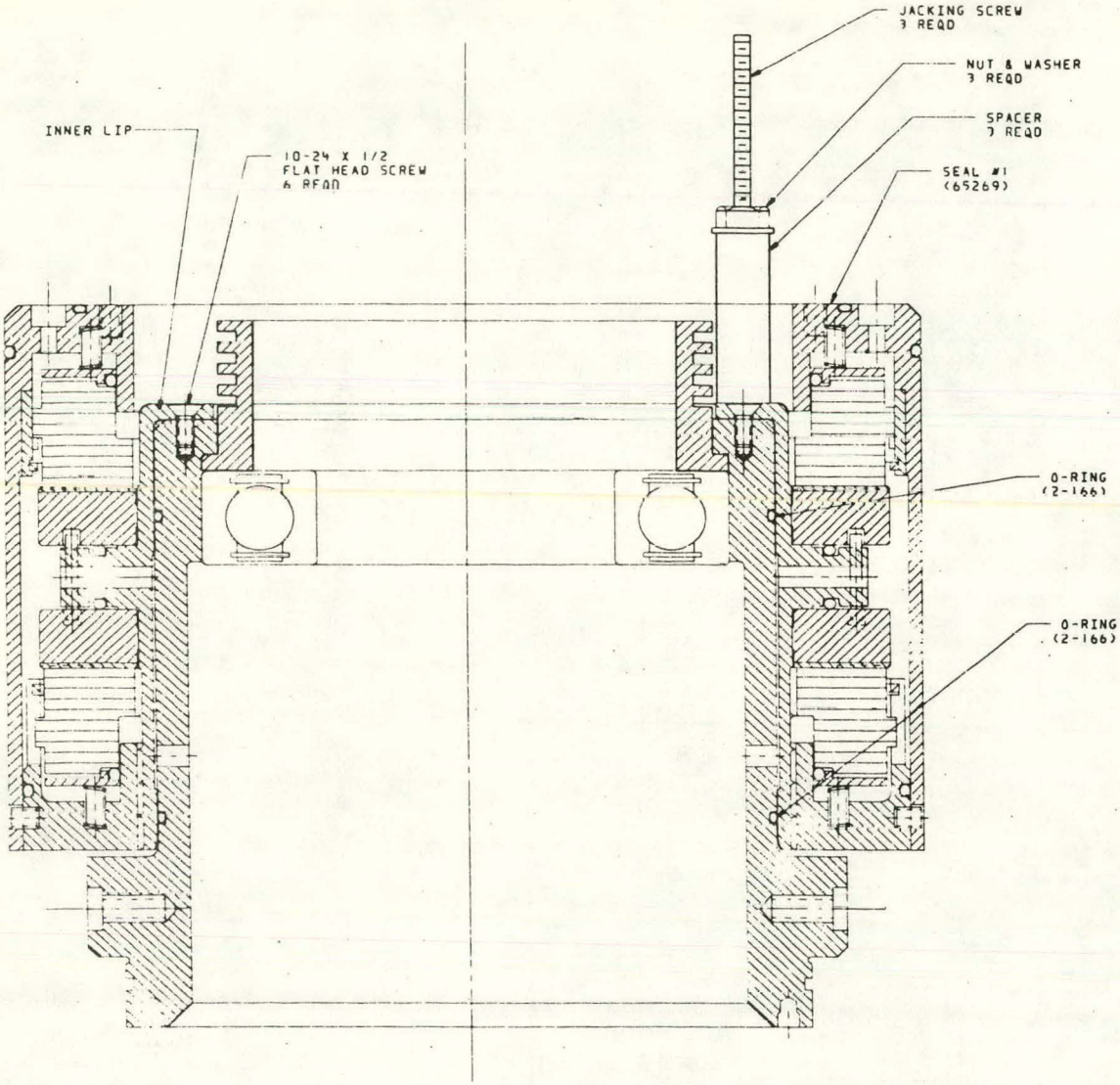

FIGURE B-11

FEED SIDE SUB-ASSEMBLY, ASSEMBLY PROCEDURE

STEP 2: INSTALL & FASTEN SEAL #1 TO SHAFT PUSHING ON INNER LIP WITH 3 EACH JACKING SCREWS.

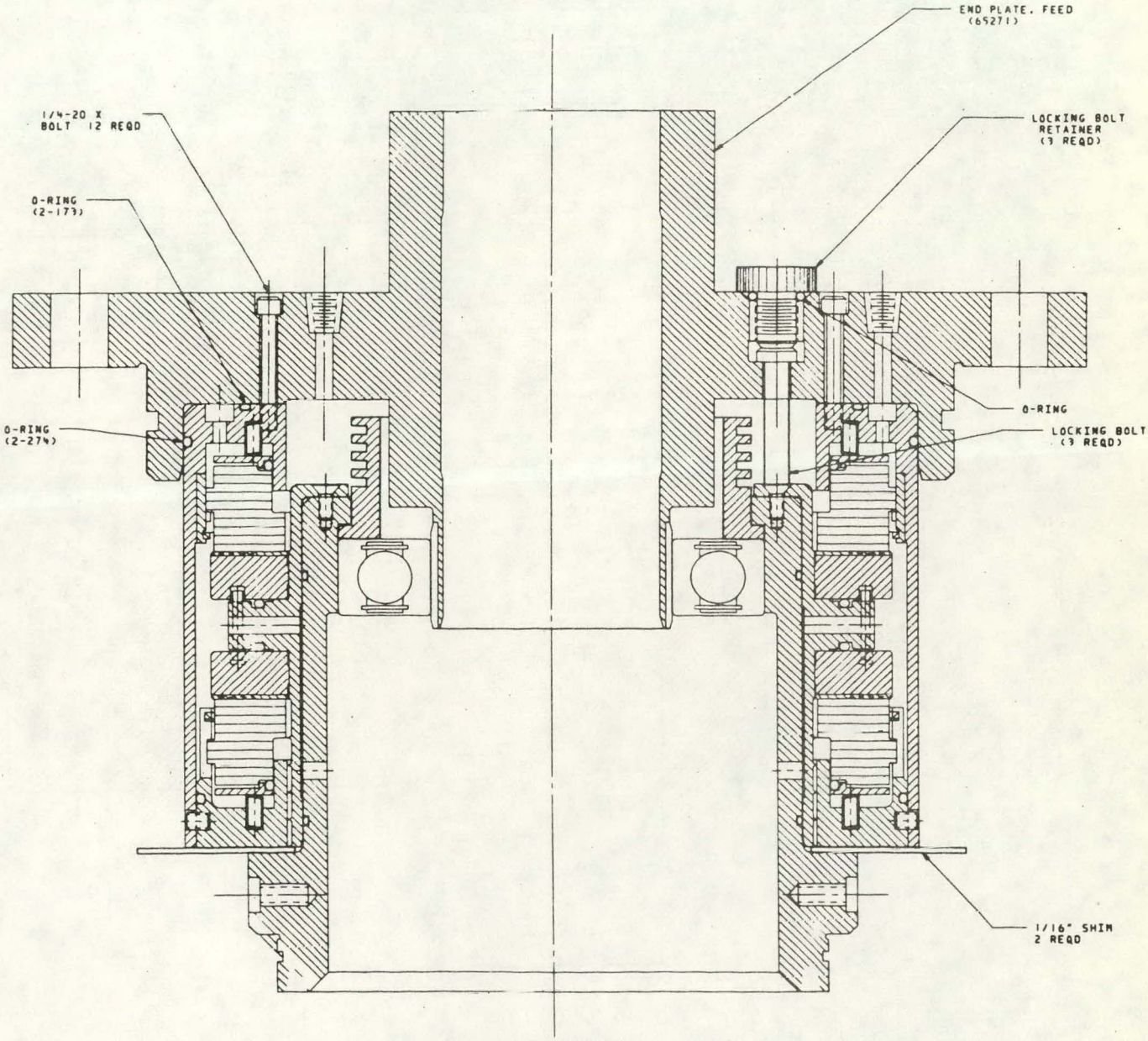

FIGURE B-12

FEED SIDE SUB-ASSEMBLY, ASSEMBLY PROCEDURE

STEP 3: INSTALL SHIMS & FASTEN END PLATE, USING 3 EACH JACKING SCREWS THRU LOCKING BOLT HOLES. HEAT END PLATE & COOL INNER SHAFT TO EASE ASSEMBY REMOVE JACKING SCREWS & INSTALL LOCKING BOLTS & LOCKING BOLT RETAINERS.

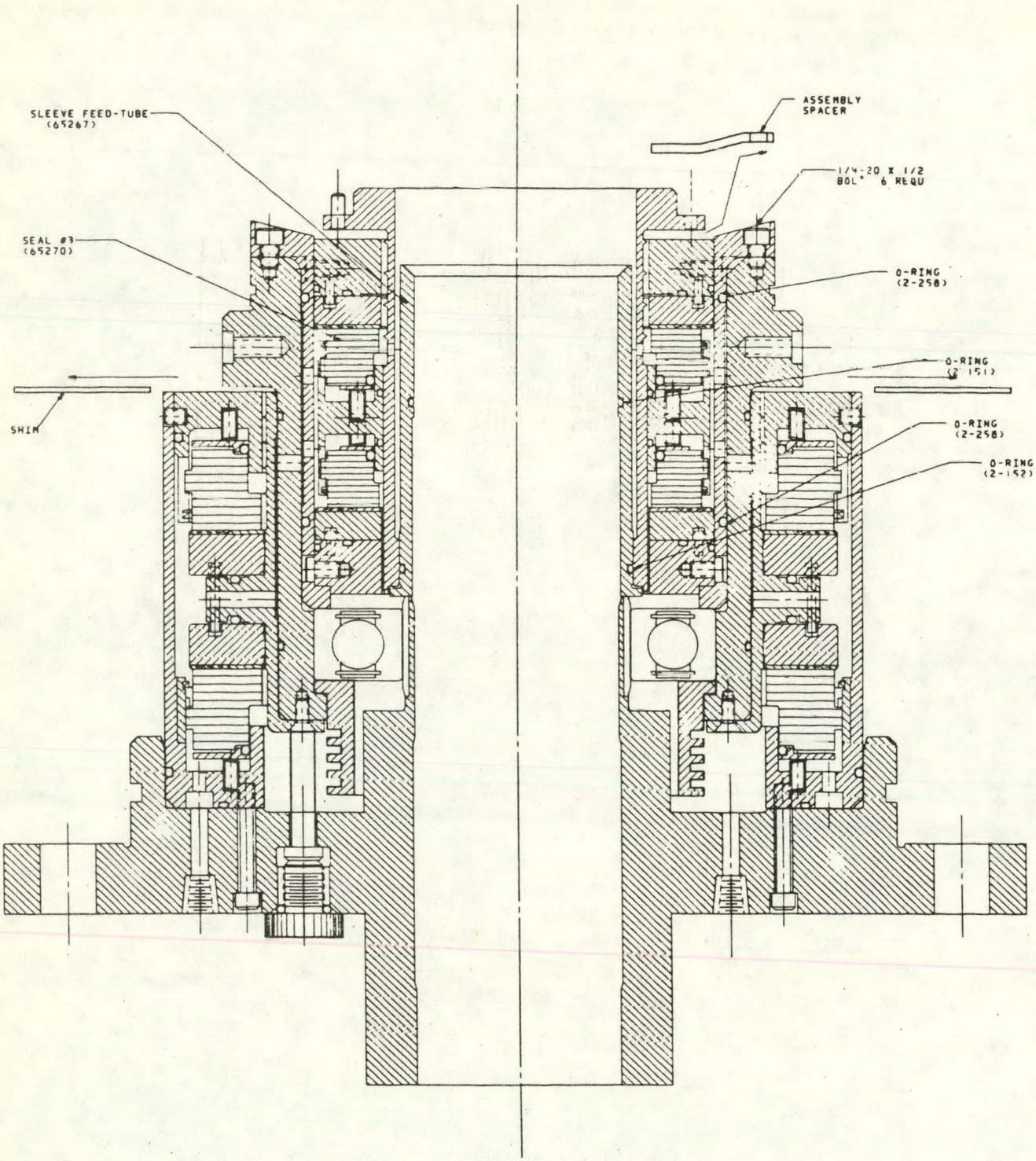

FIGURE B-13

FEED SIDE SUB-ASSEMBLY. ASSEMBLY PROCEDURE
STEP 4: REMOVE SHIMS& INSTALL SLEEVE ON SEAL #3. INSTALL SEAL #3.
REMOVE ASSEMBLY SPACERS FROM SEAL #3. FASTEN SEAL #3.

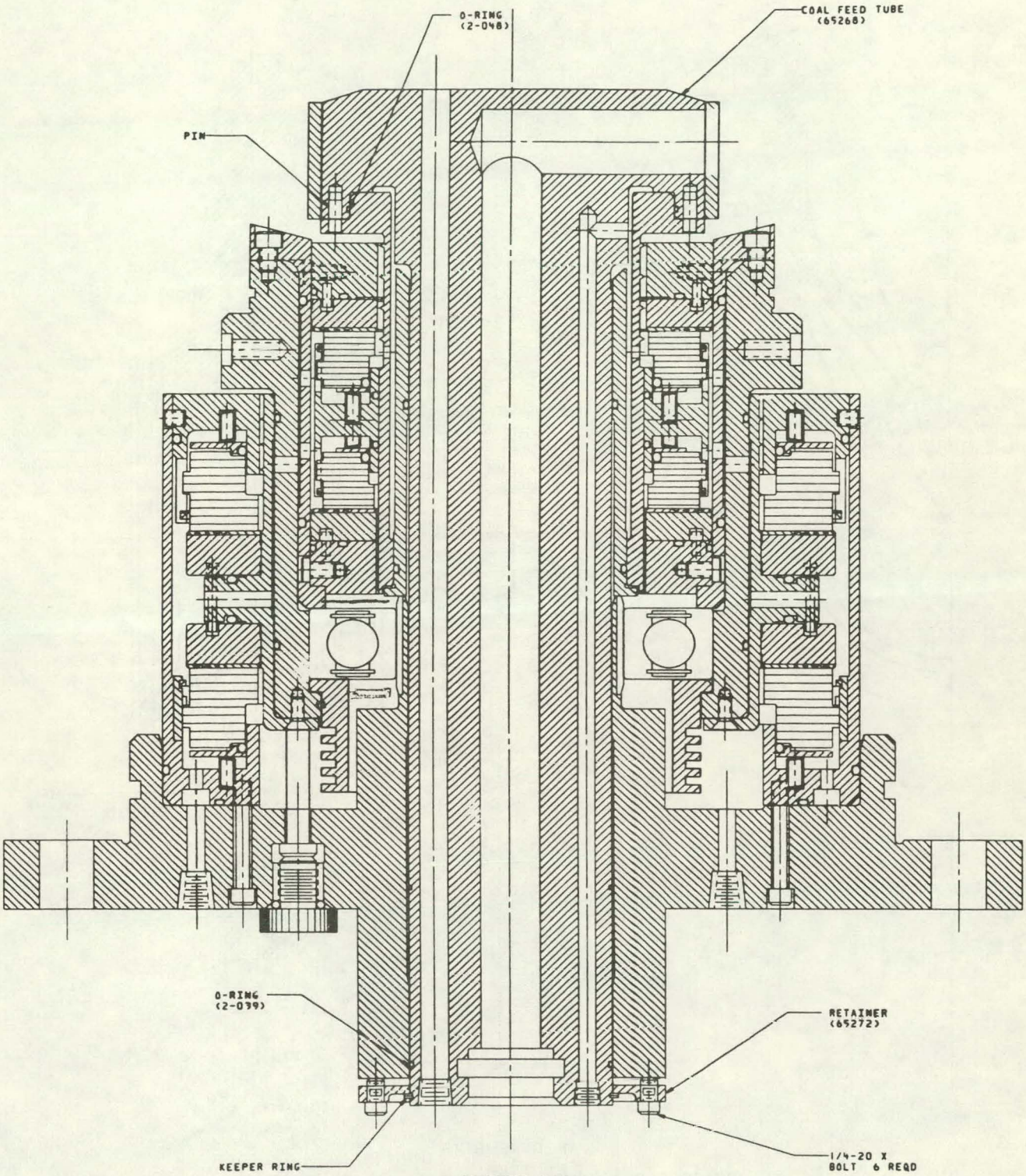

FIGURE B-14

FEED SIDE SUB-ASSEMBLY, ASSEMBLY PROCEDURE

STEP 5: INSTALL COAL FEED TUBE, RETAINER & KEEPER RING.
CLAMP ASSEMBLY BY MEANS OF BOLTS IN RETAINER

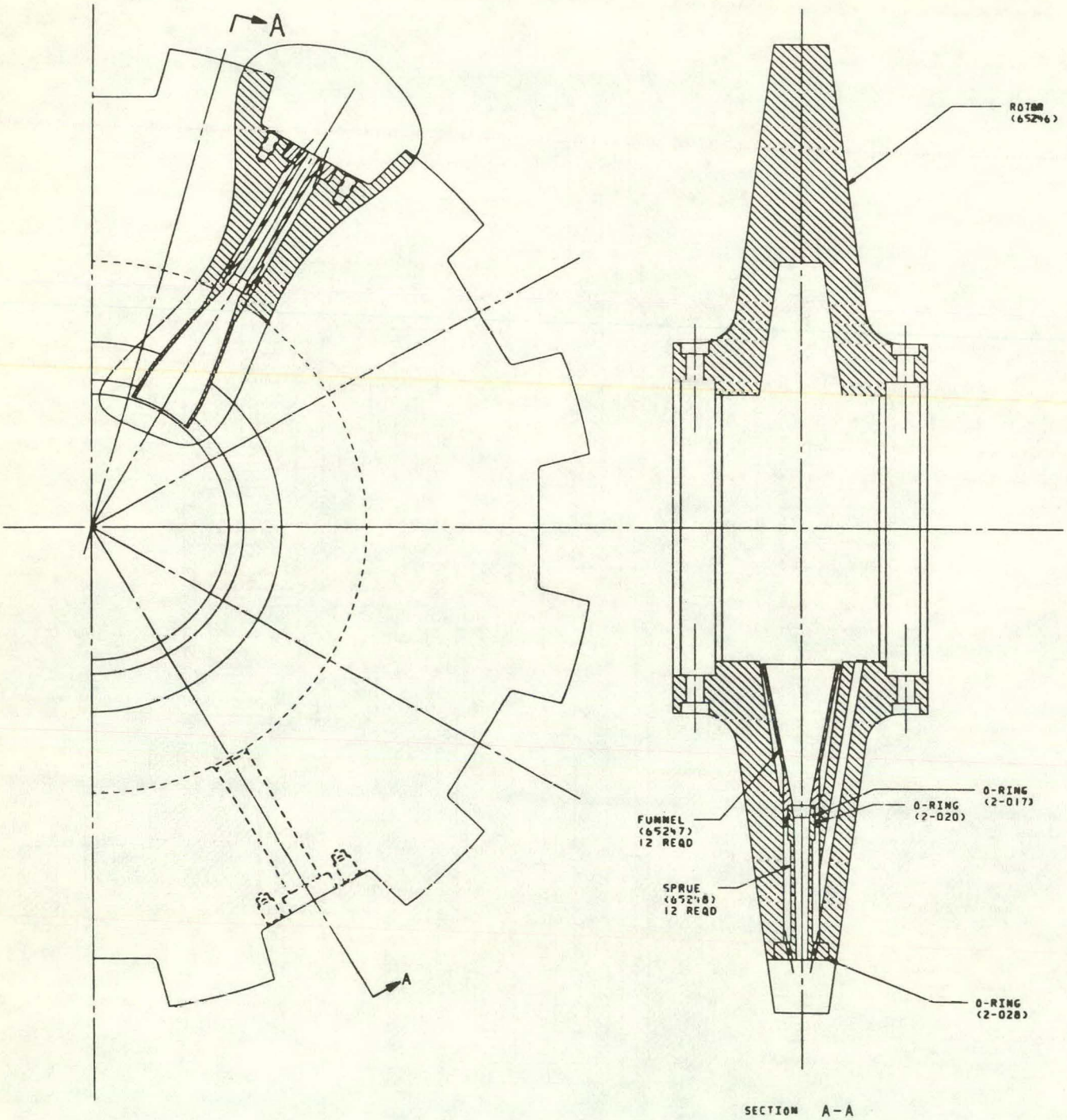

FIGURE B-15

ROTOR SUB-ASSEMBLY, ASSEMBLY PROCEDURE

STEP 1: INSTALL FUNNELS & SPRUES IN ROTOR.

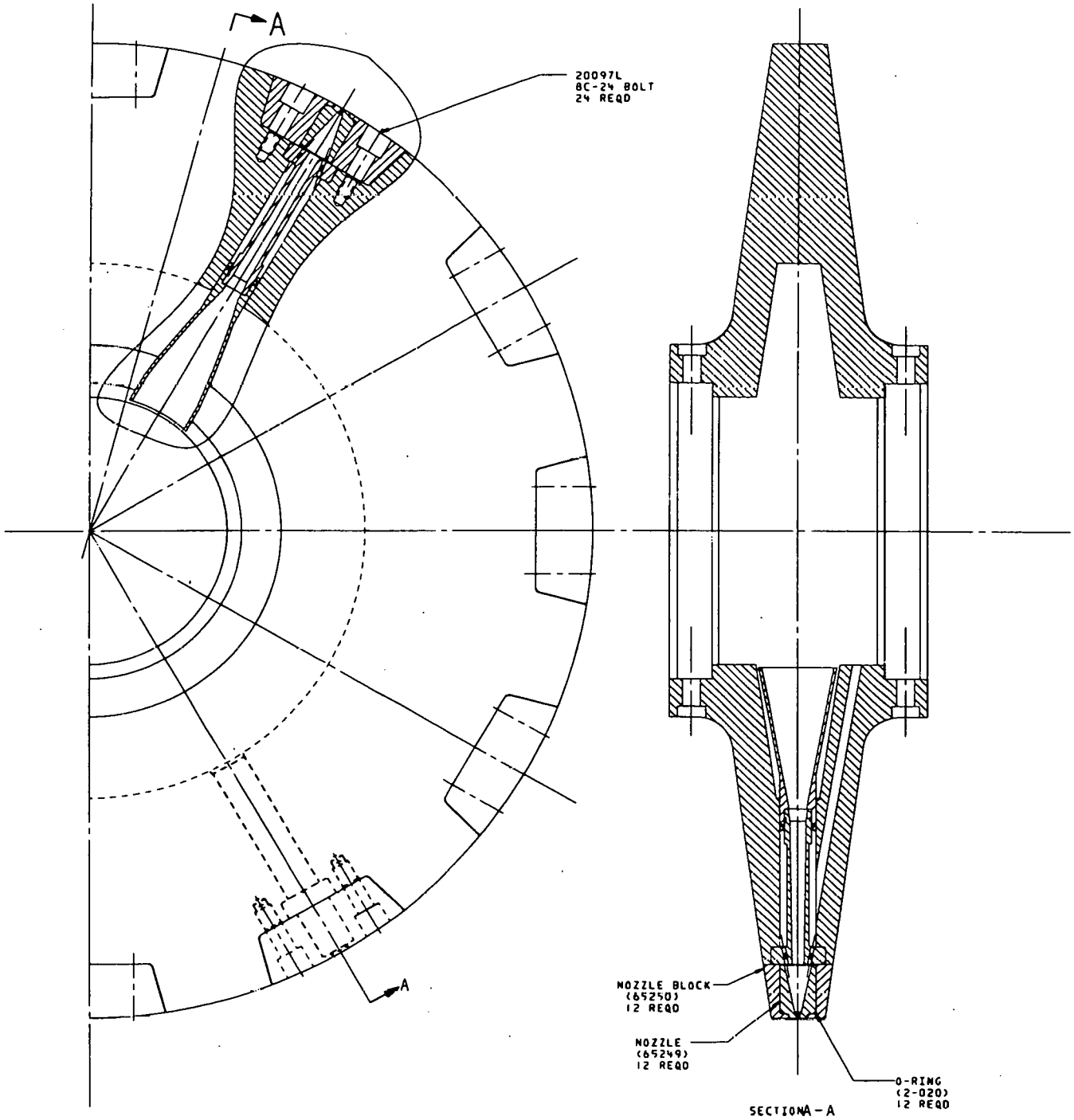

FIGURE 16

ROTOR SUB-ASSEMBLY, ASSEMBLY PROCEDURE

STEP 2: INSTALL NOZZLE IN NOZZLE BLOCK & FASTEN TO ROTOR

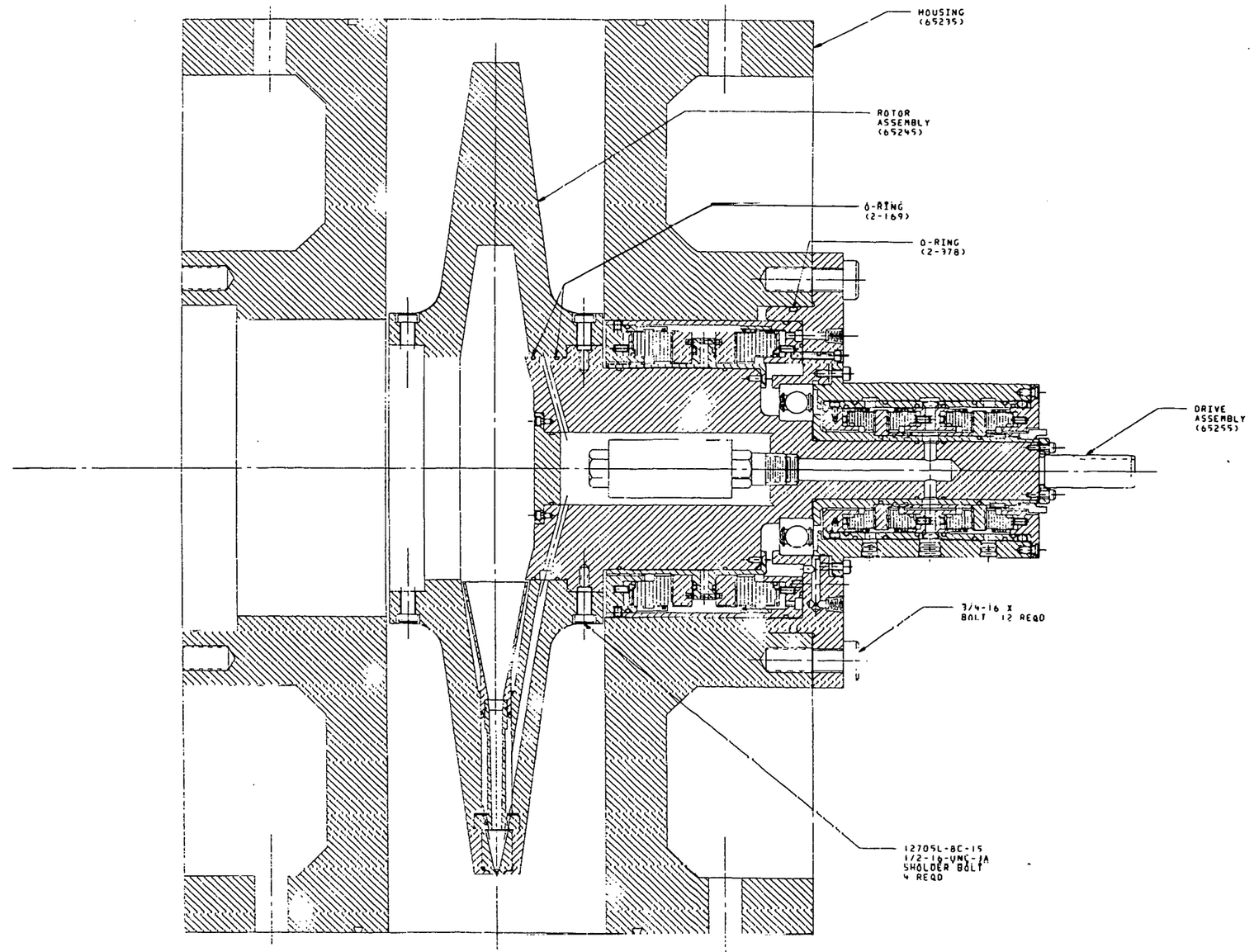

FIGURE B-17

FEEDER ASSEMBLY PROCEDURE

STEP 1: LOCATE ROTOR IN HOUSING AND BY MEANS OF JACKING SCREWS, DRIVE SHAFT ASSEMBLY INTO HOUSING AND ROTOR. FASTEN DRIVE ASSEMBLY. JACK BACK DRIVE END WALL 1/16" TO OPEN UP ROTOR FEED SIDE CLEARANCE

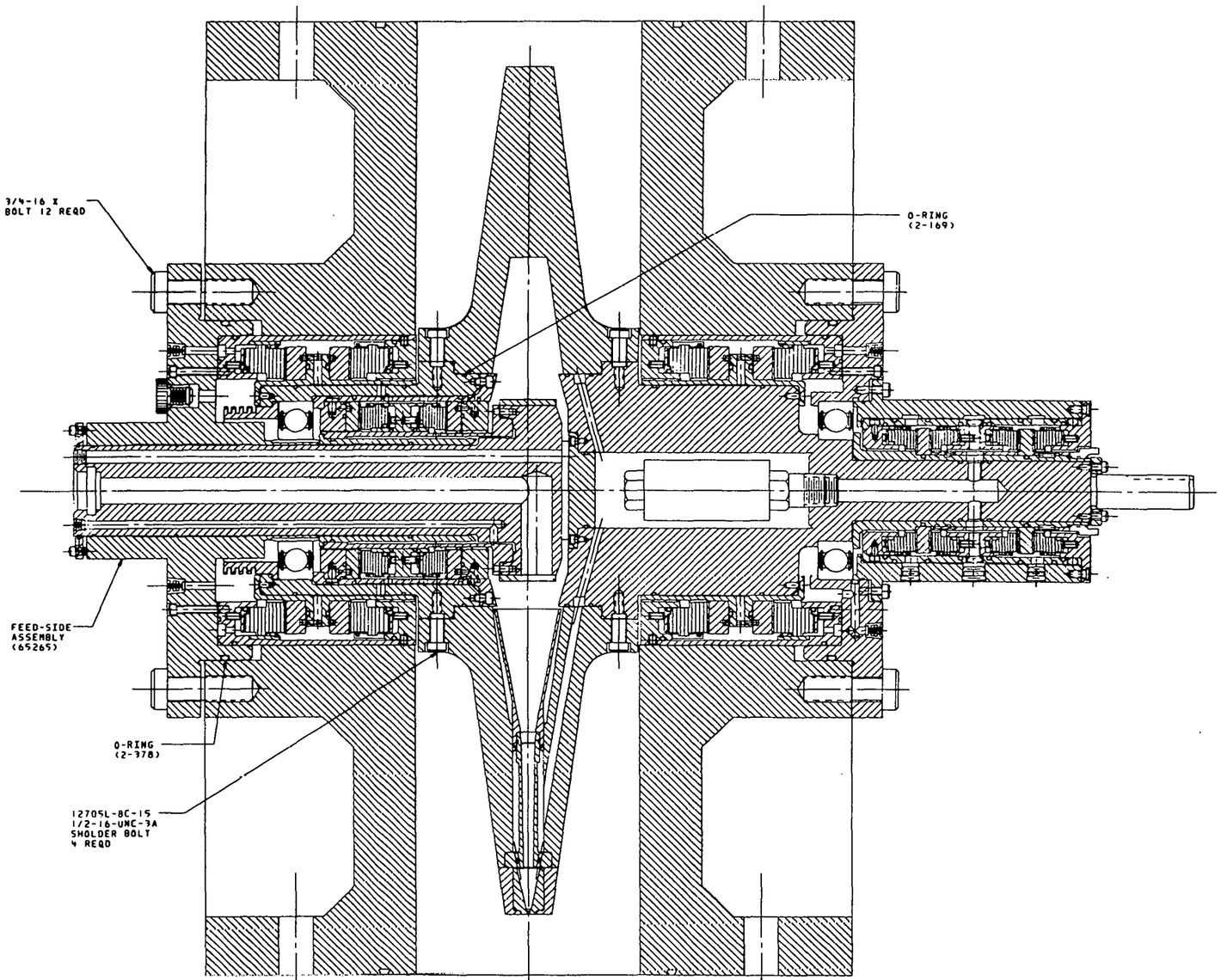

FIGURE B-18
FEEDER ASSEMBLY PROCEDURE

STEP 2: WHILE STILL SUPPORTING ROTOR, DRIVE FEED-SIDE ASSEMBLY INTO HOUSING AND ROTOR BY MEANS OF JACKING SCREWS. FASTEN ASSEMBLY. EVEN UP SIDEWALL CLEARANCE AS REQUIRED. REMOVE LOCKING BOLT RETAINERS. REMOVE LOCKING BOLTS AND RE-INSTALL LOCKING BOLT RETAINERS. REMOVE LOCKING COLLAR (SEE FIGURE B-9).

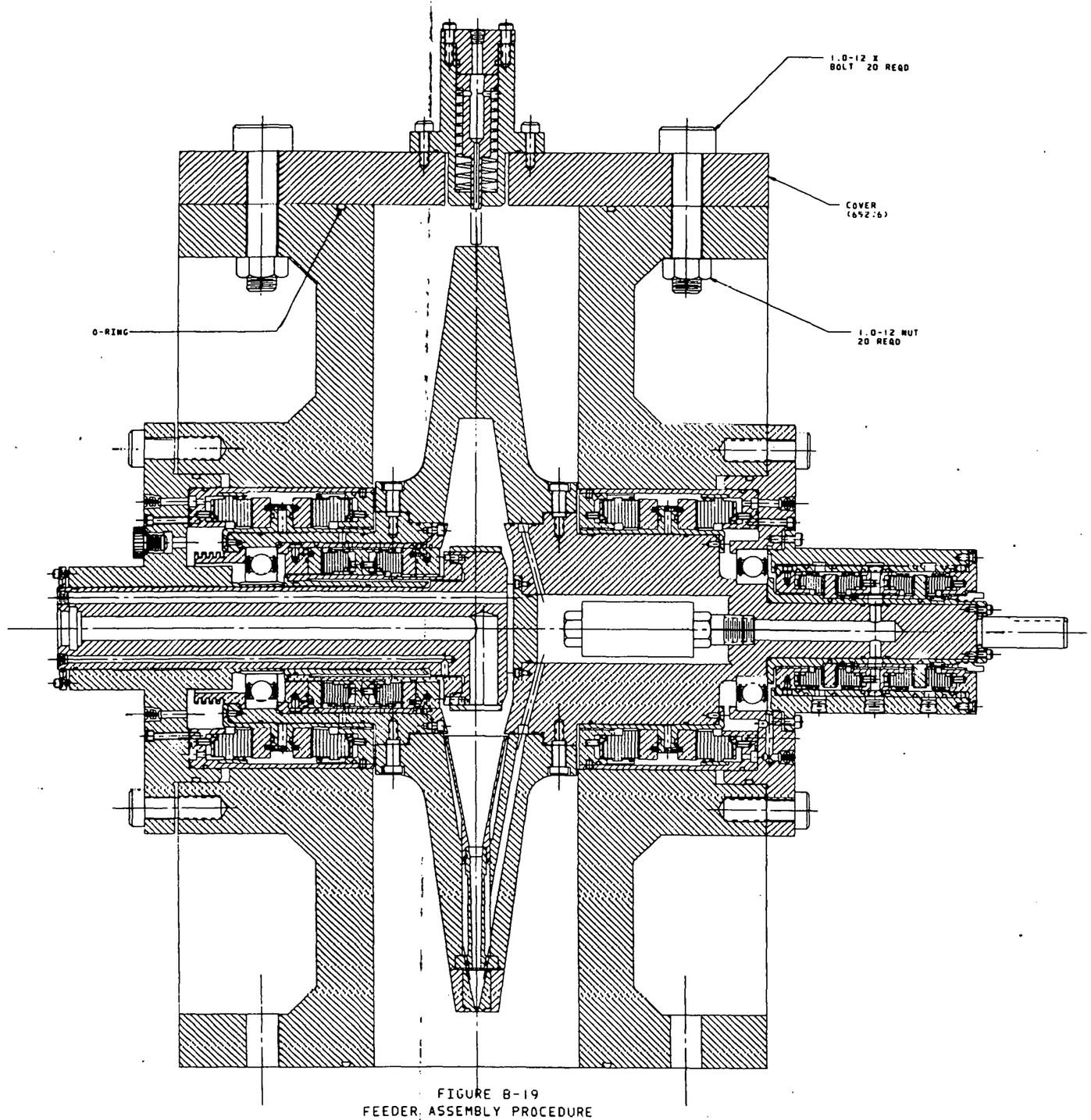

FIGURE B-19
FEEDER ASSEMBLY PROCEDURE
STEP 3: INSTALL AND FASTEN COVER. INSTALL INSTRUMENTATION ETC.

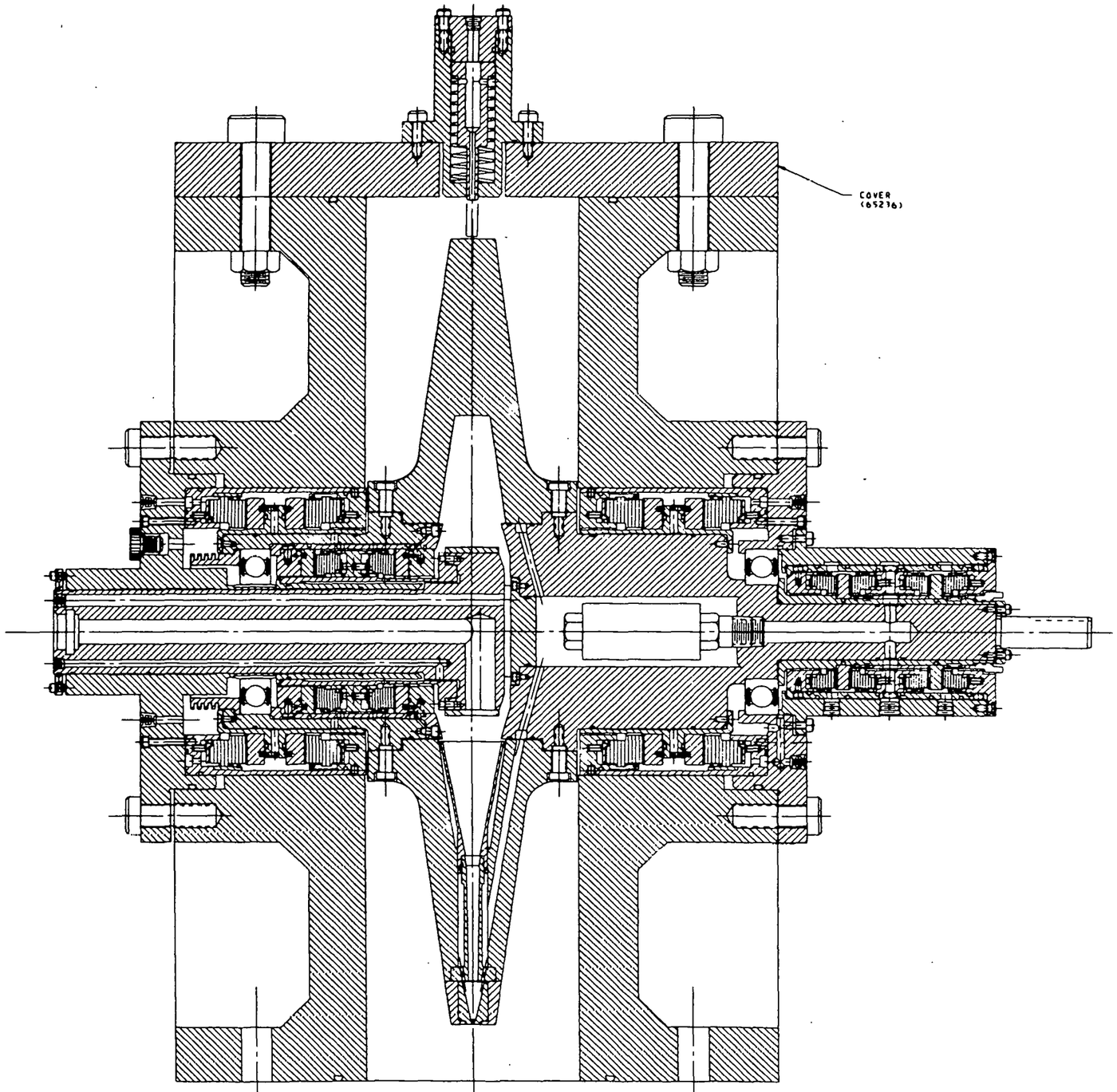

FIGURE B-20
FEEDER DISASSEMBLY PROCEDURE
STEP 1: REMOVE INSTRUMENTATION ETC. UNFASTEN AND REMOVE COVER.

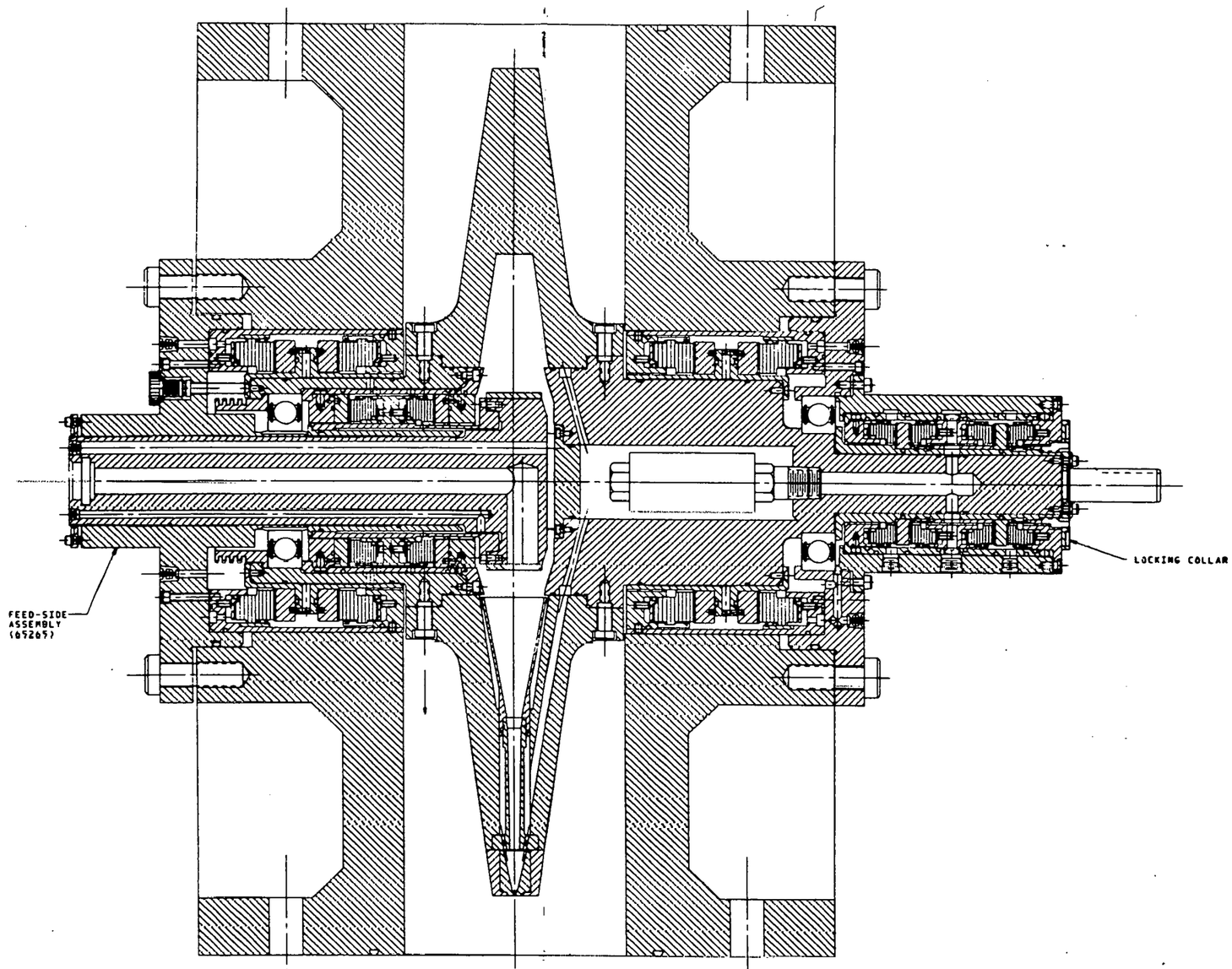

FIGURE B-21
FEEDER DISASSEMBLY PROCEDURE
STEP 2: SUPPORT ROTOR, INSTALL LOCKING COLLAR, LOCKING BOLTS, & LOCKING BOLT RETAINERS & UNFASTEN FEED-SIDE ASSEMBLY FROM ROTOR & HOUSING. REMOVE ROTOR SHOLDER BOLTS. REMOVE ASSEMBLY BY MEANS OF JACKING SCREWS.

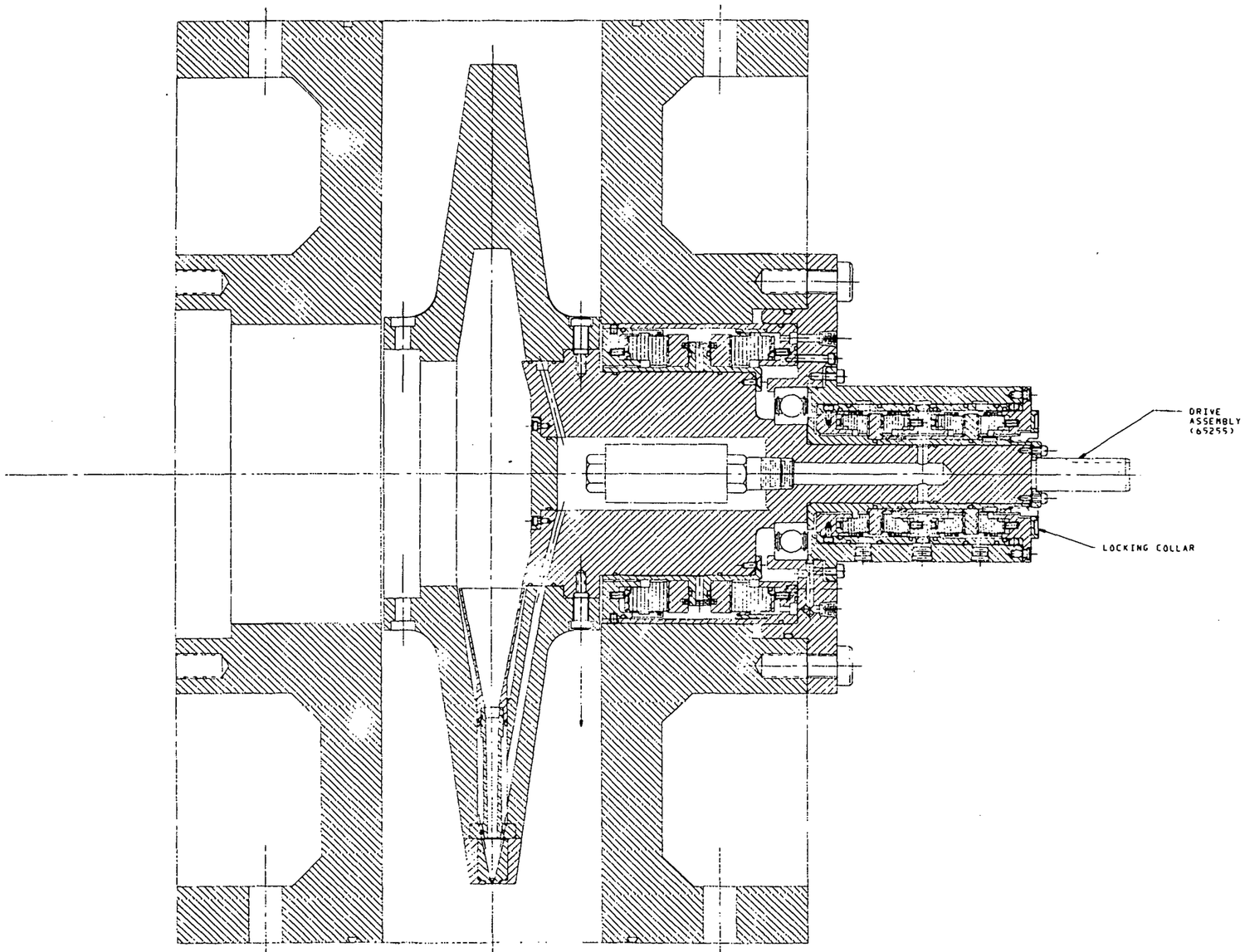

FIGURE B-22

FEEDER DISASSEMBLY PROCEDURE

STEP 3: WHILE SUPPORTING ROTOR, UNFASTEN DRIVE ASSEMBLY FROM ROTOR AND HOUSING. REMOVE ASSEMBLY BY MEANS OF JACKING SCREWS. REMOVE ROTOR.

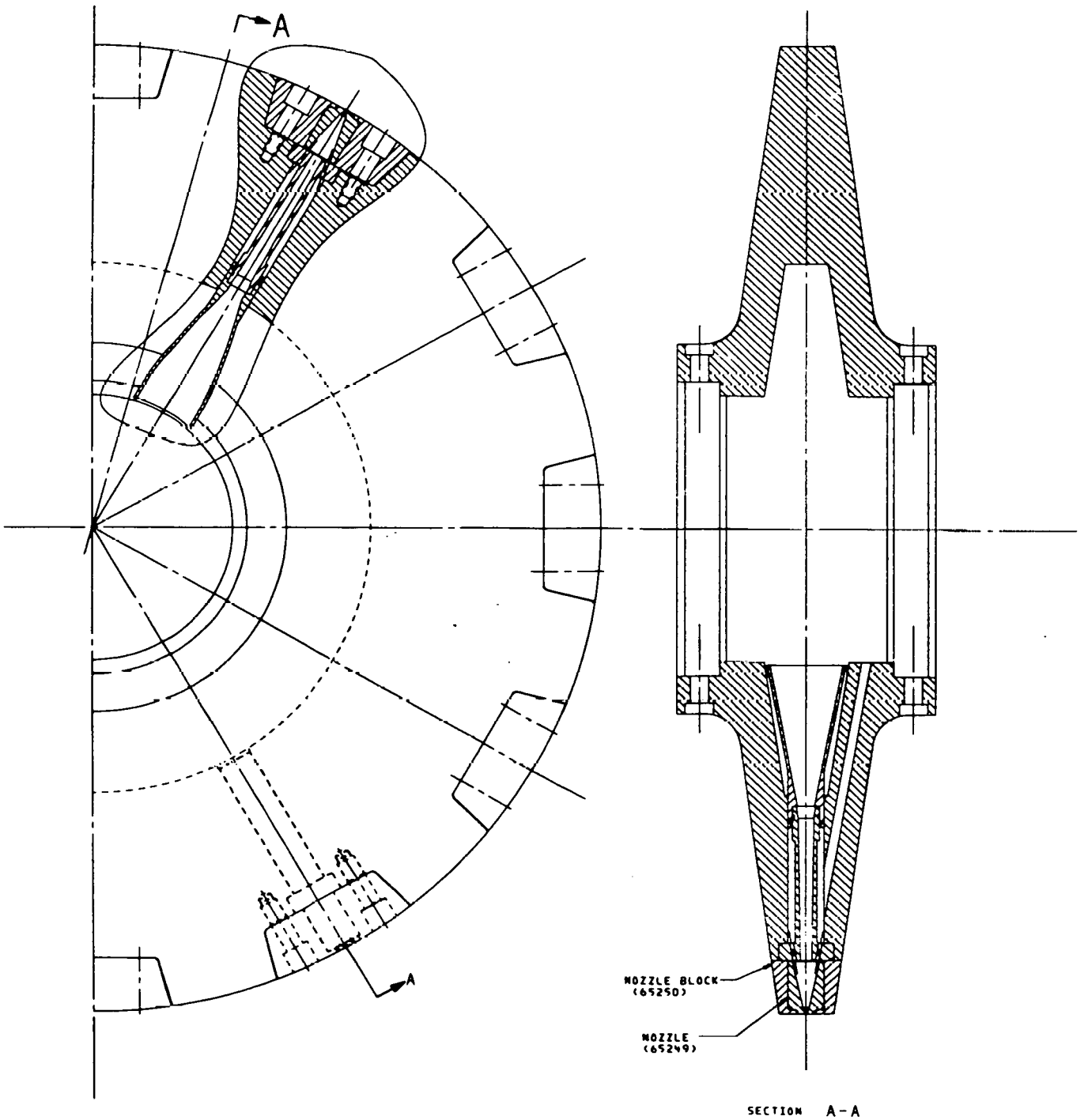

FIGURE B-23

ROTOR SUB-ASSEMBLY, DISASSEMBLY PROCEDURE

STEP 1: REMOVE NOZZLE BLOCKS FROM ROTOR.
REMOVE NOZZLES FROM NOZZLE BLOCK

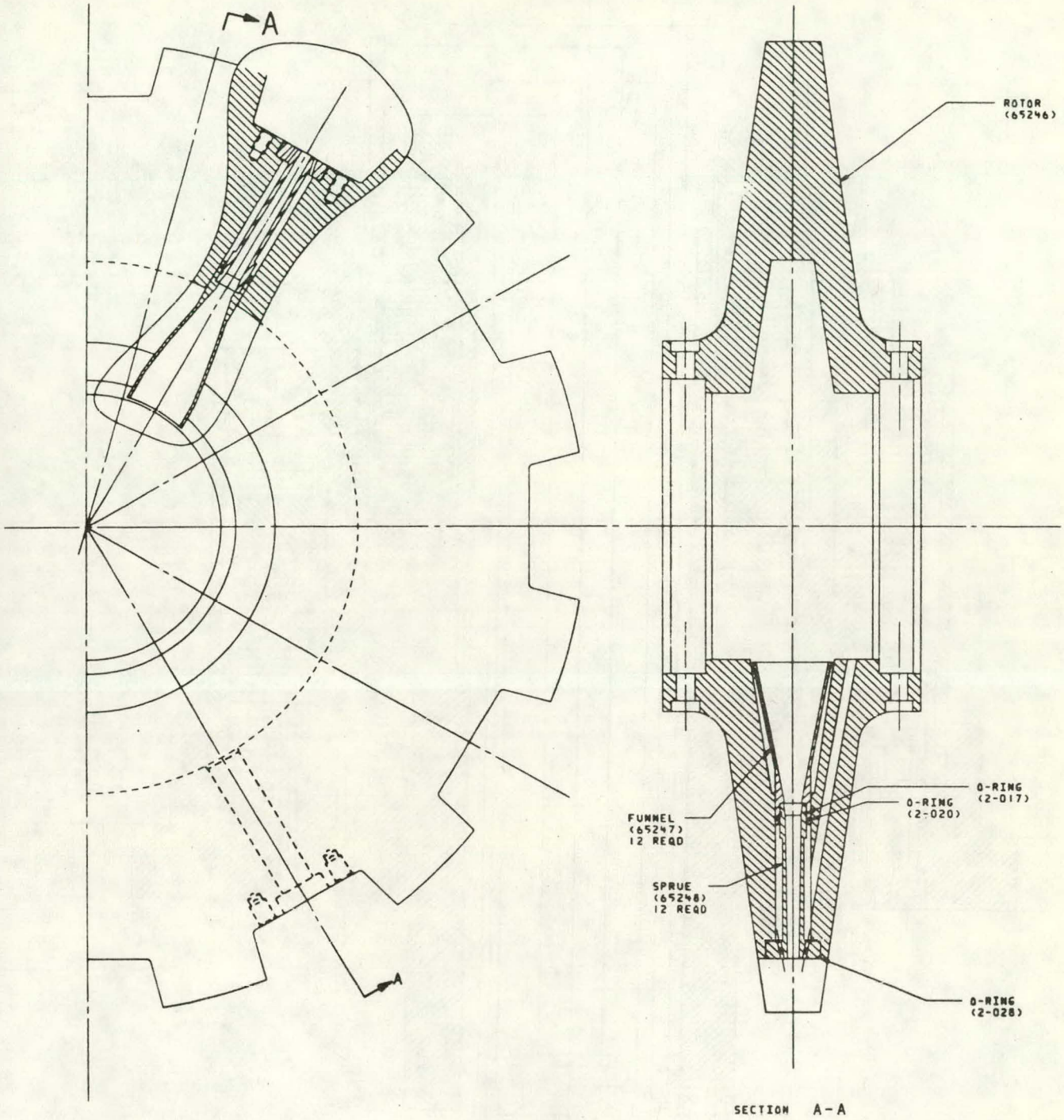

FIGURE B-24

ROTOR SUB-ASSEMBLY, DISASSEMBLY PROCEDURE

STEP 2: REMOVE FUNNELS & SPRUES FROM ROTOR.

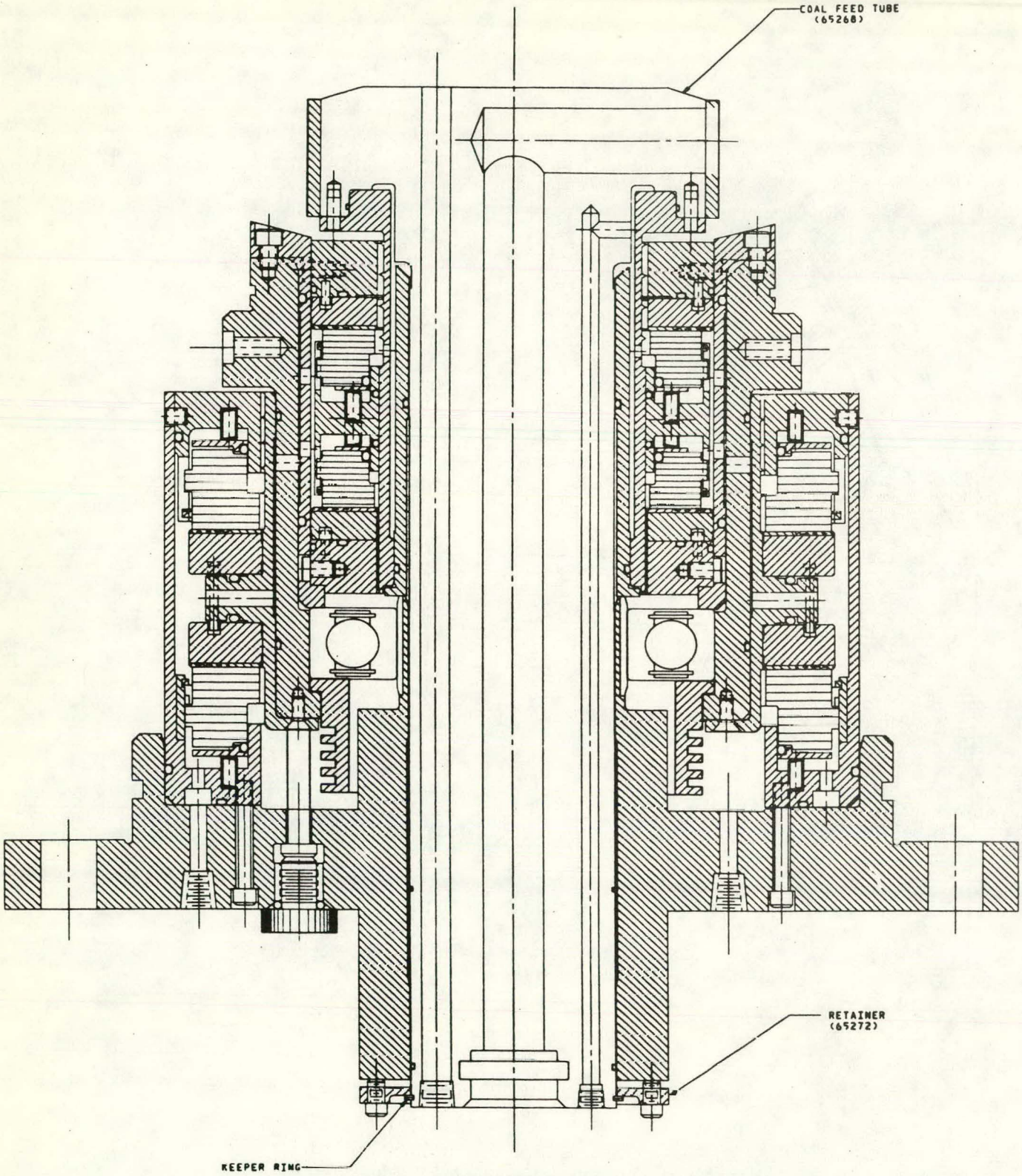

FIGURE B-25

FEED SIDE SUB-ASSEMBLY, DISASSEMBLY PROCEDURE

STEP 1: UNFASTEN RETAINER & REMOVE KEEPER RING. REMOVE COAL FEED TUBE.

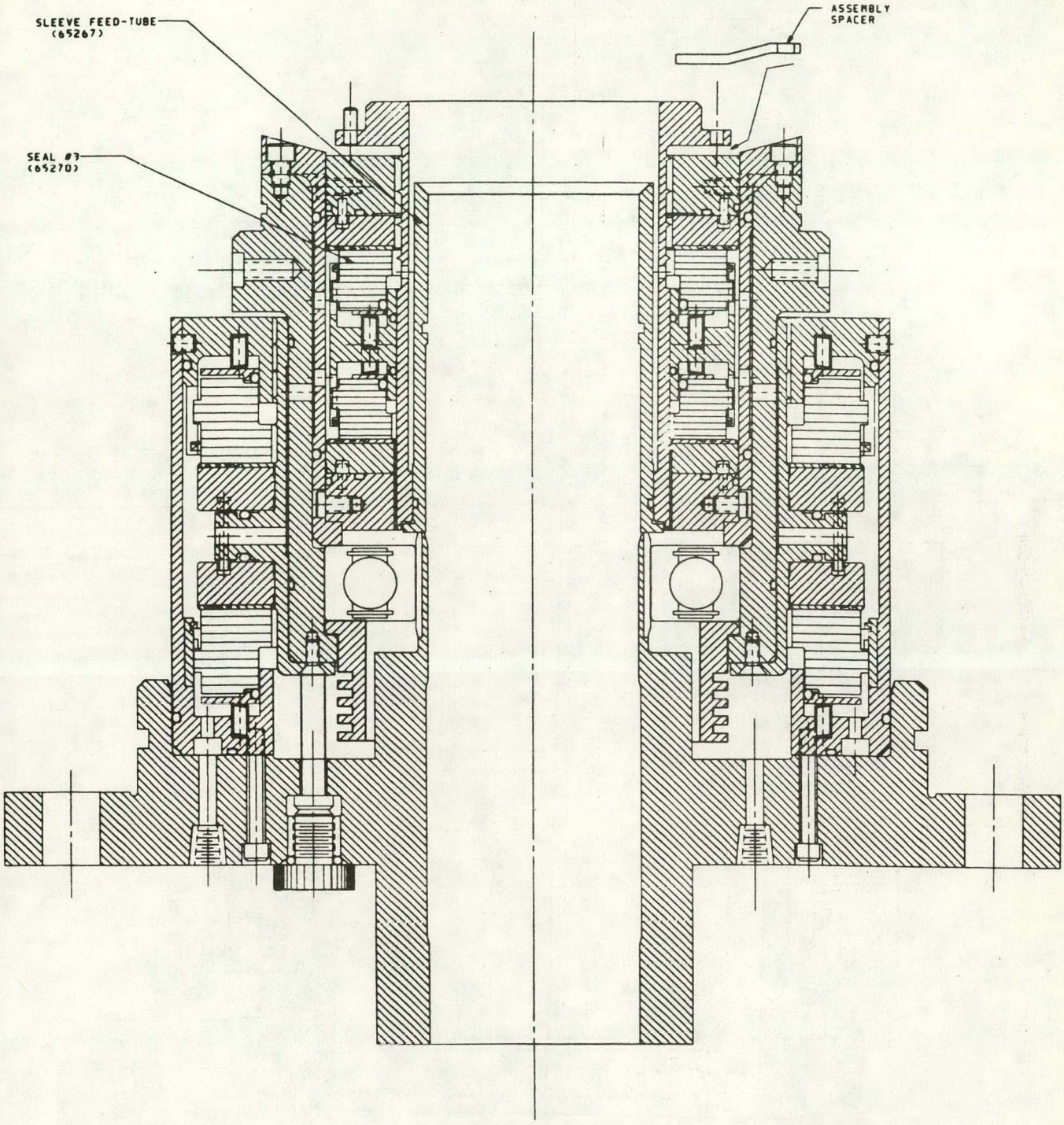

FIGURE B-26

FEED SIDE SUB-ASSEMBLY, DISASSEMBLY PROCEDURE

STEP 2: INSTALL ASSEMBLY SPACERS. UNFASTEN SEAL #3. LIFT OUT SEAL #3 BY MEANS OF LIFTING TABS. REMOVE FEED TUBE SLEEVE.

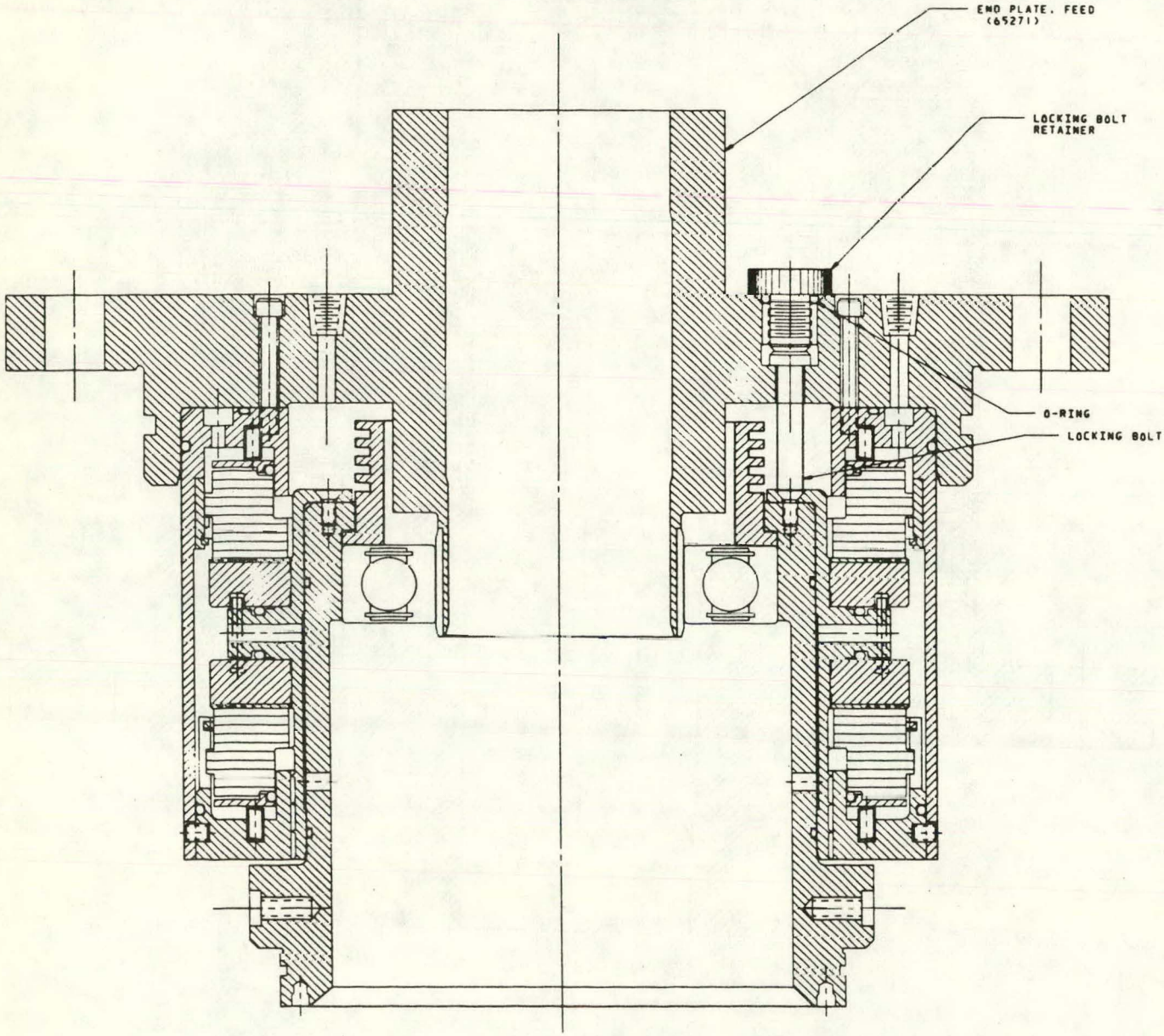

FIGURE B-27

FEED SIDE SUB-ASSEMBLY, DISASSEMBLY PROCEDURE

STEP 3: REMOVE LOCKING BOLT RETAINERS & LOCKING BOLTS, UNFASTEN SEAL #1, & BY MEANS OF JACKING SCREWS, REMOVE END PLATE.

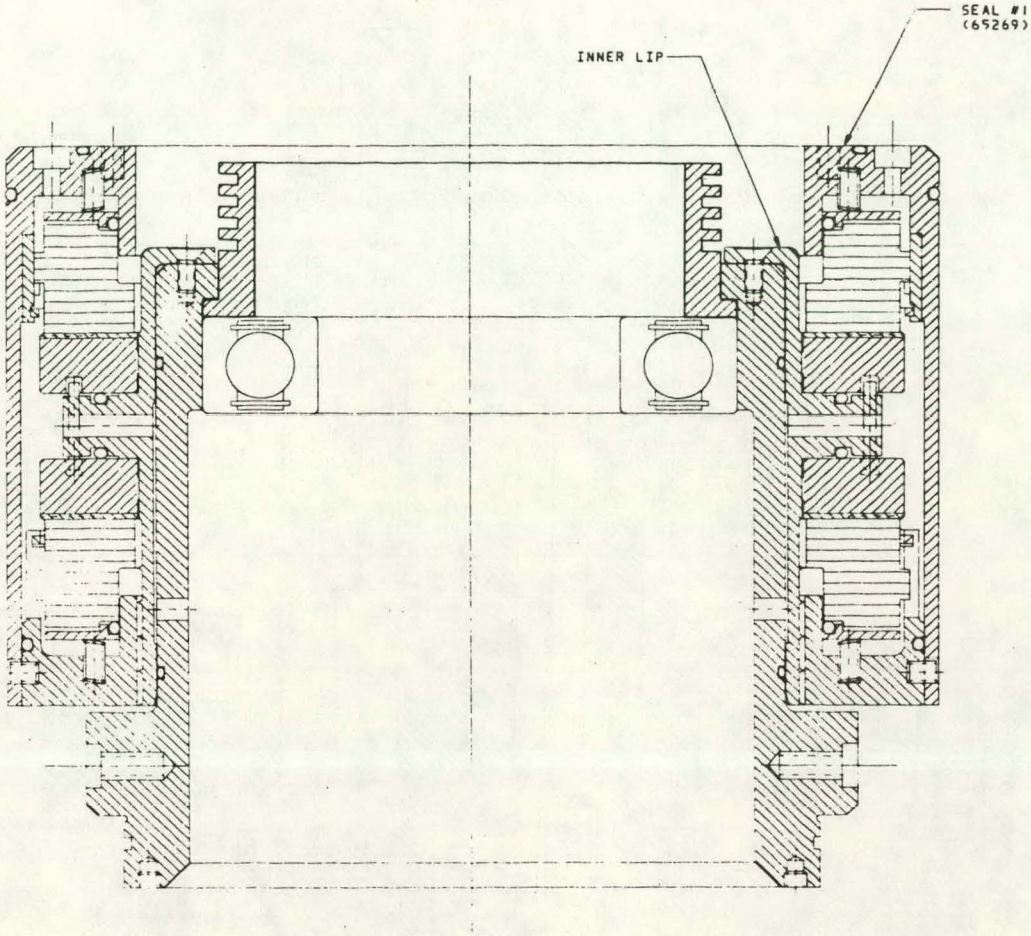

FIGURE B-28

FEED SIDE SUB-ASSEMBLY, DISASSEMBLY PROCEDURE

STEP 4: UNFASTEN SEAL #1 FROM SHAFT. REMOVE SEAL BY MEANS OF JACKING SCREWS IN INNER LIP

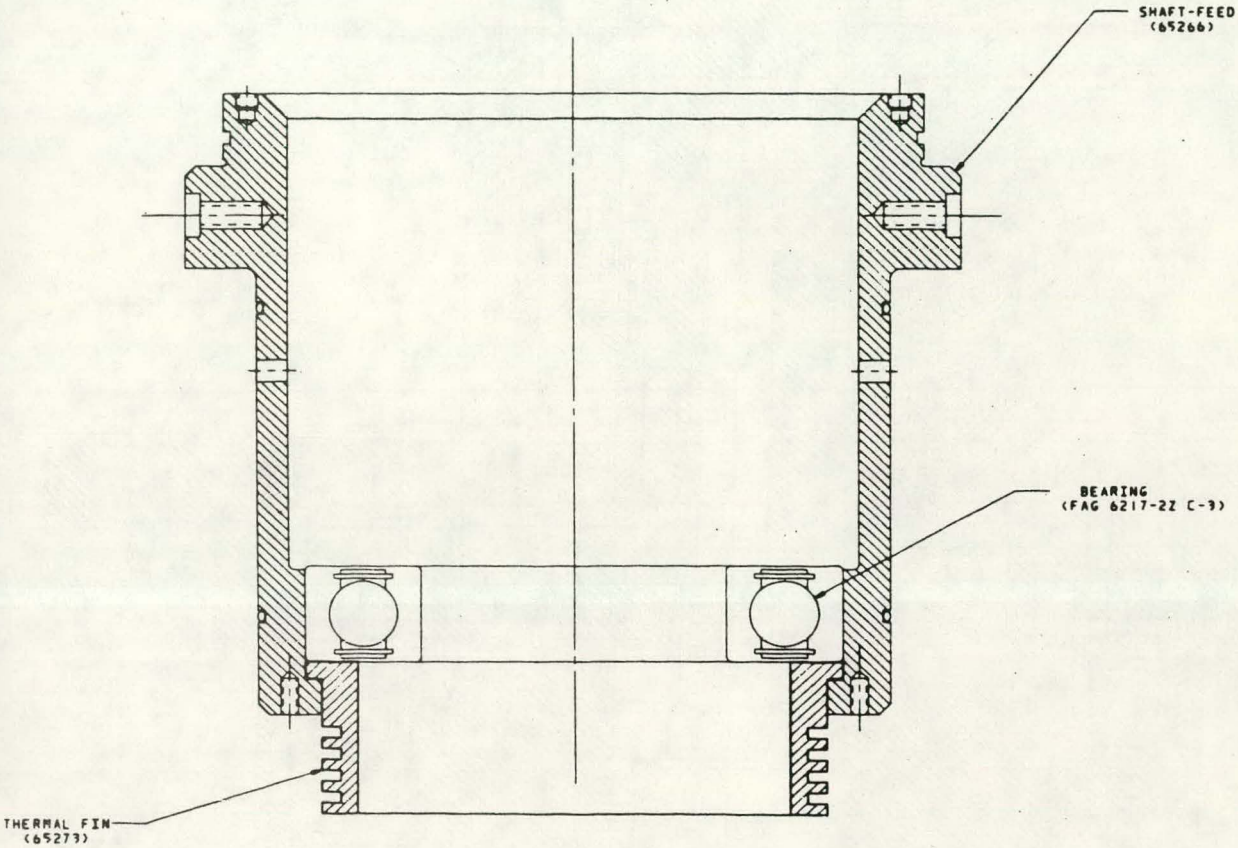

FIGURE B-29

FEED SIDE SUB-ASSEMBLY, DISASSEMBLY PROCEDURE

STEP 5: REMOVE BEARING FROM SHAFT USING PRESS.
REMOVE THERMAL FIN FROM SHAFT.

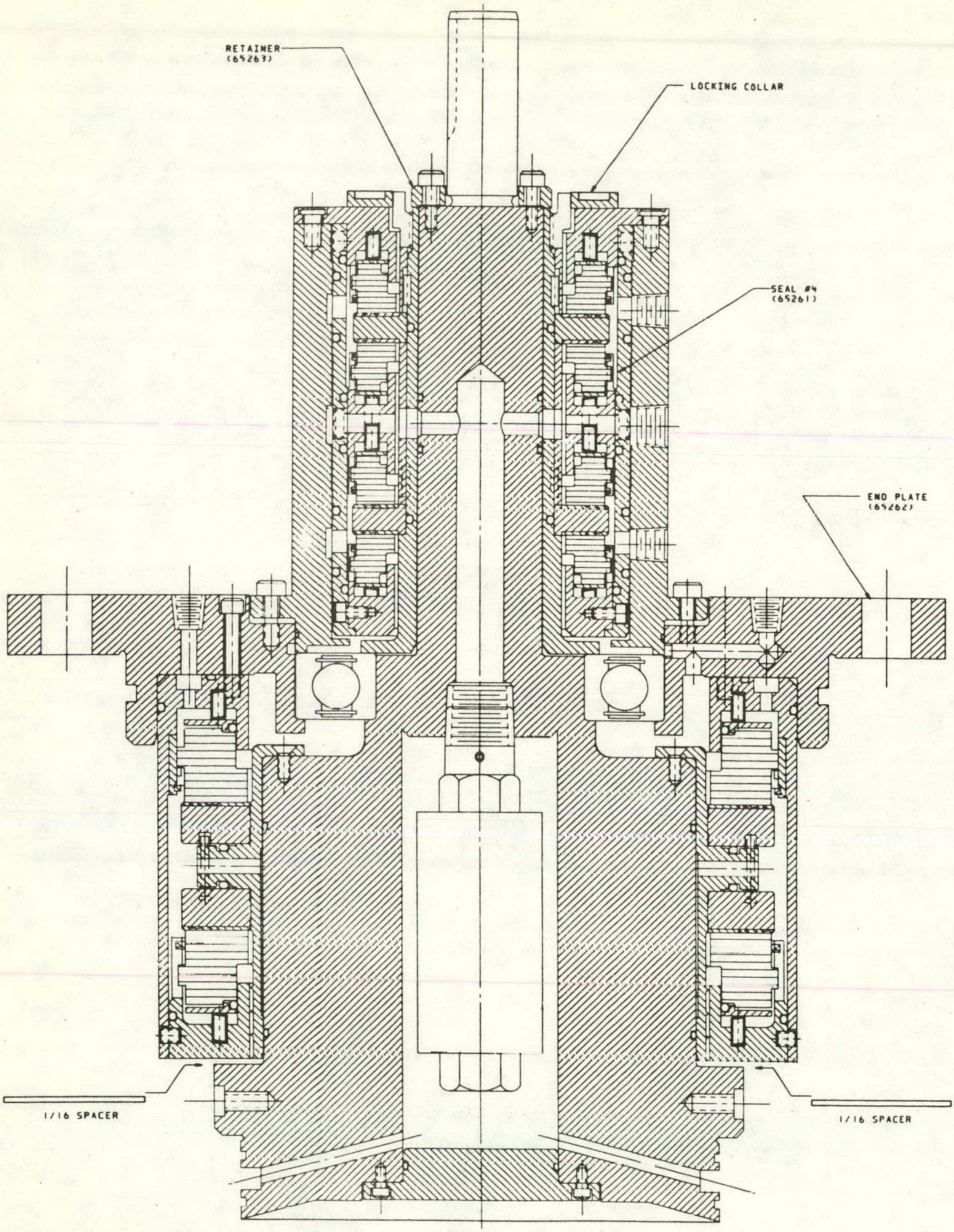

FIGURE B-30
DRIVE SIDE ASSEMBLY, DISASSEMBLY PROCEDURE
STEP 1: INSTALL 1/16" SPACERS. UNFASTEN SEAL #4 FROM END PLATE.
UNFASTEN & REMOVE RETAINER

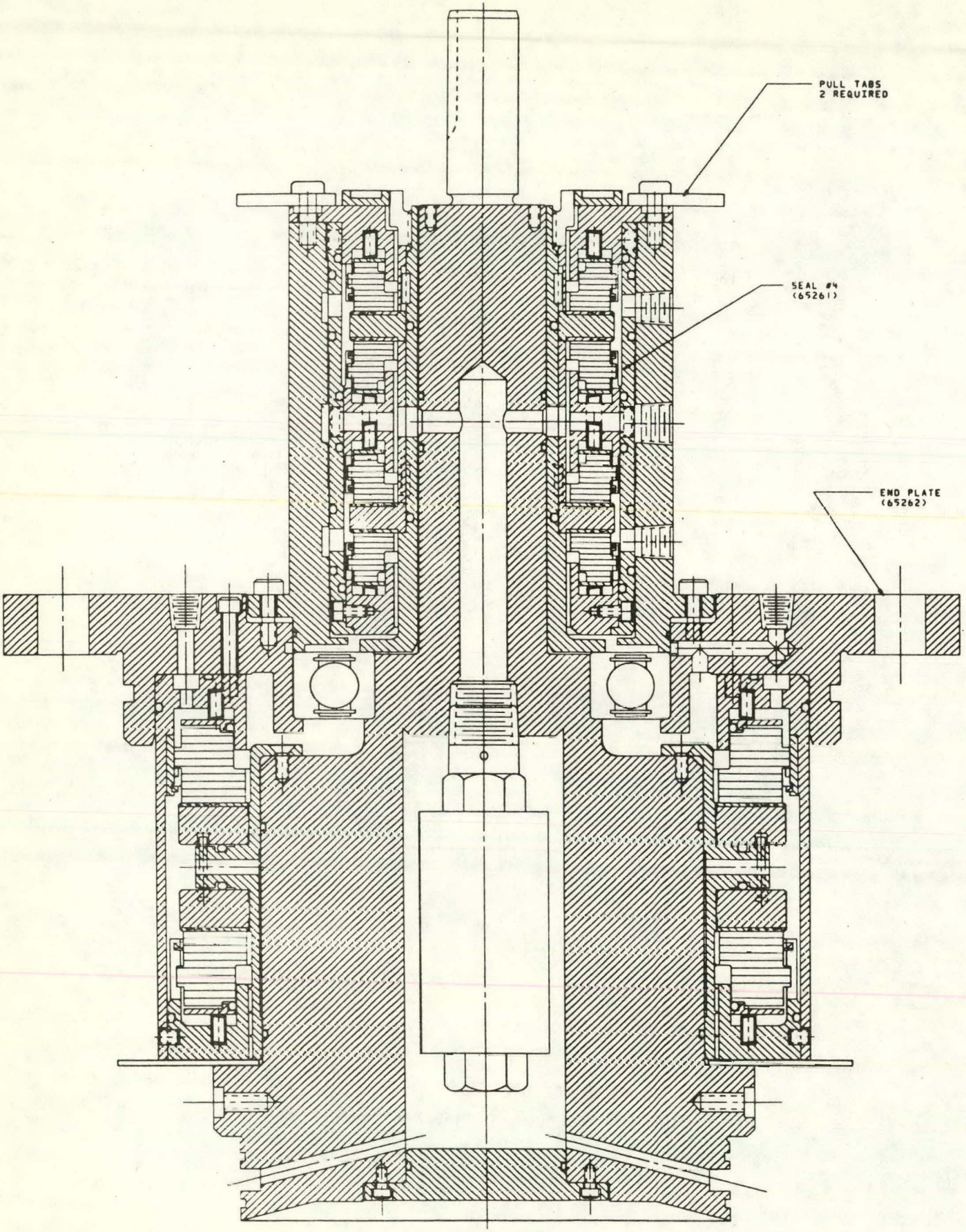

FIGURE B-31
DRIVE SIDE ASSEMBLY, DISASSEMBLY PROCEDURE
STEP 2: INSTALL PULL TABS & USING A WHEEL PULLER CENTERED ON THE SHAFT, REMOVE SEAL #4 FROM END PLATE

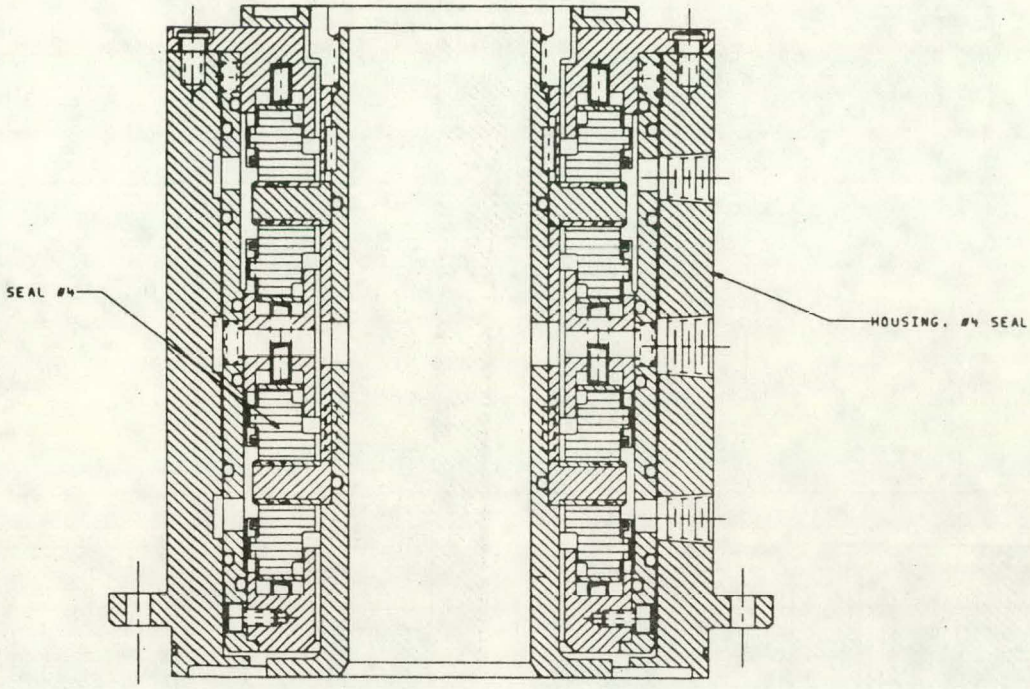

FIGURE B-32

DRIVE SIDE SUB-ASSEMBLY, DISASSEMBLY PROCEDURE

STEP 3: UNFASTEN SEAL #4 FROM HOUSING & USING JACKING SCREWS, SEPARATE SEAL #4 FROM HOUSING

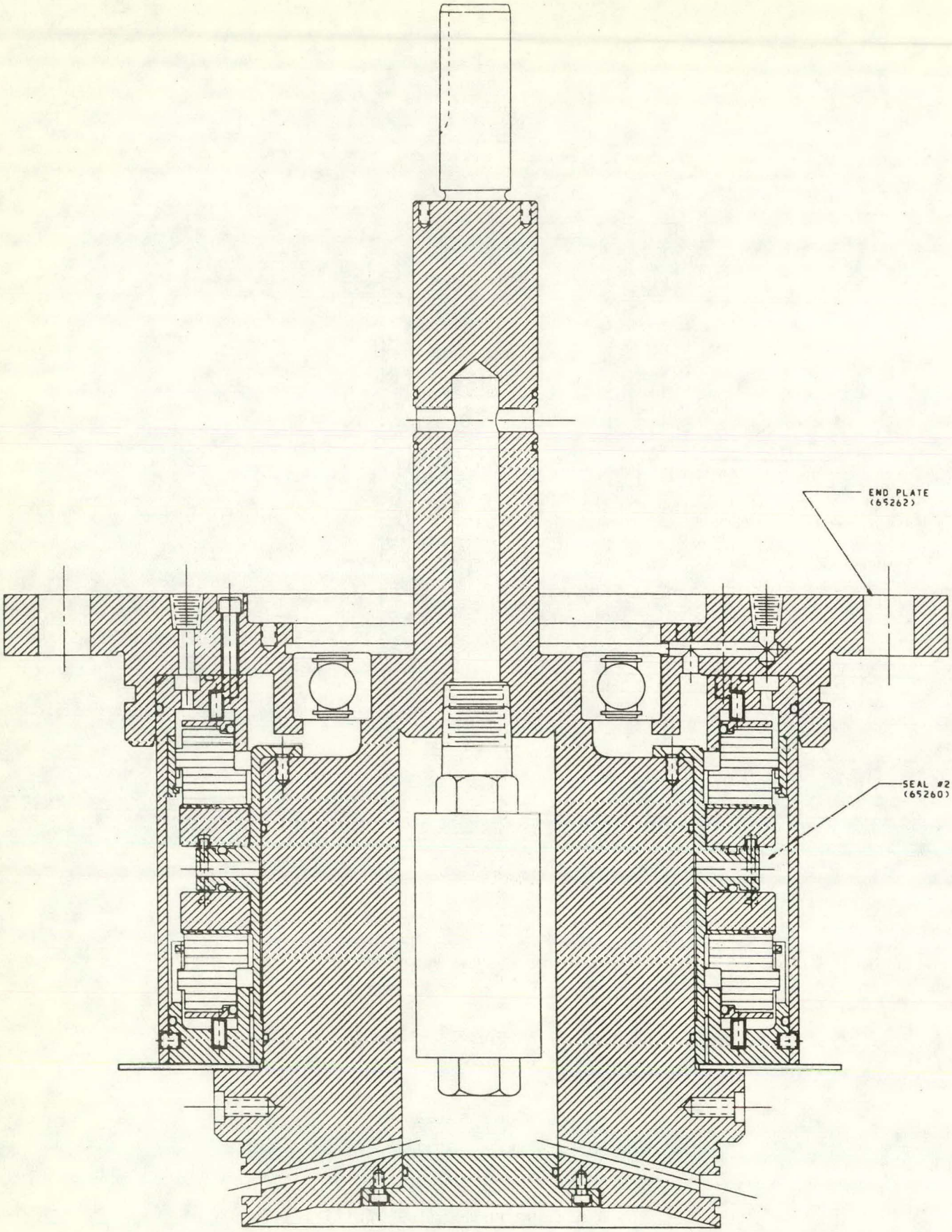

FIGURE B-33
DRIVE SIDE ASSEMBLY, DISASSEMBLY PROCEDURE
STEP 4: UNFASTEN END PLATE FROM SEAL #2 & BY MEANS
OF JACKING SCREWS. REMOVE END PLATE

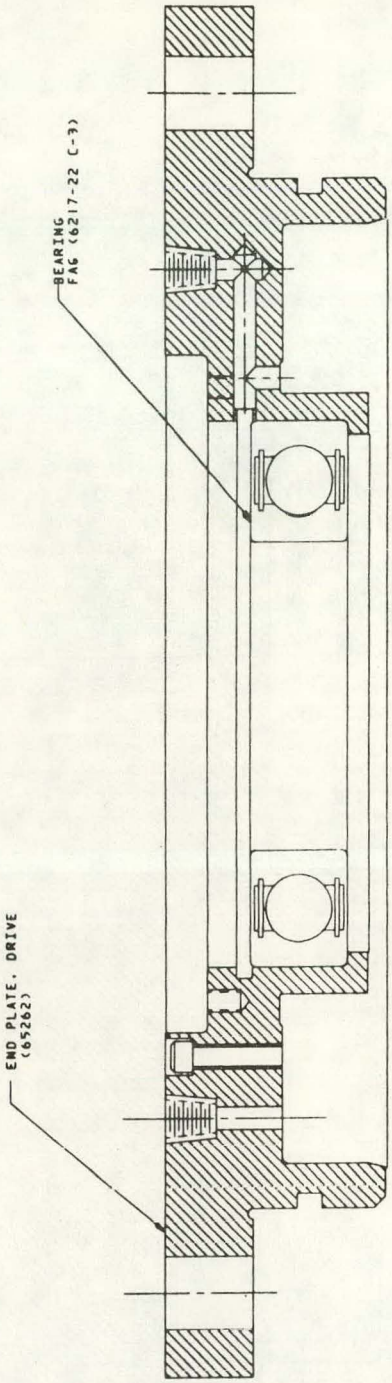

FIGURE B-34

DRIVE SIDE SUB-ASSEMBLY, DISASSEMBLY PROCEDURE

STEP 5: REMOVE BEARING FROM END PLATE USING BEARING TOOL & PRESS

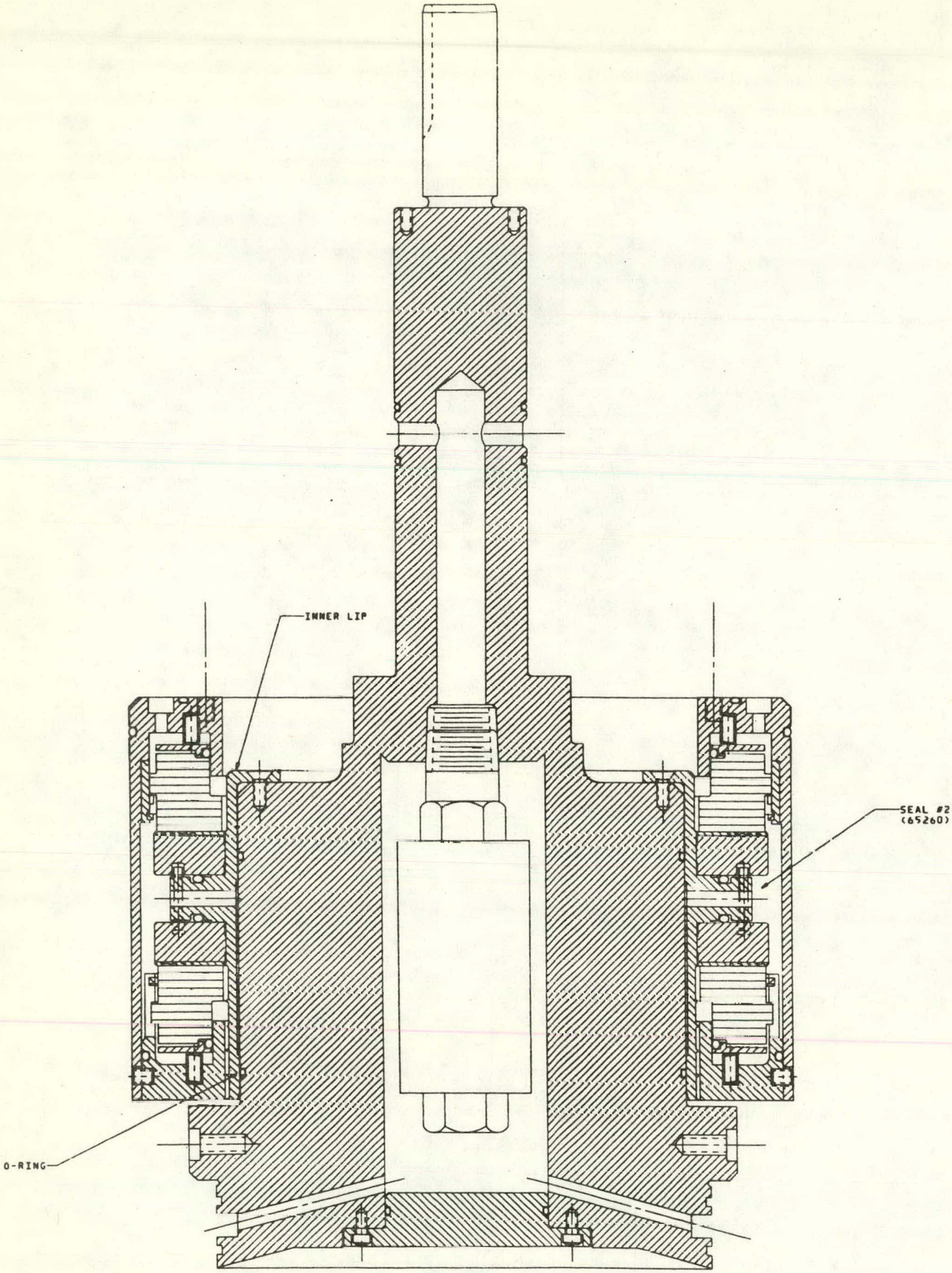

FIGURE B-35
DRIVE SIDE ASSEMBLY, DISASSEMBLY PROCEDURE

STEP 6: UNFASTEN SEAL #2 & REMOVE SEAL #2 BY MEANS OF JACKING SCREWS IN INNER LIP

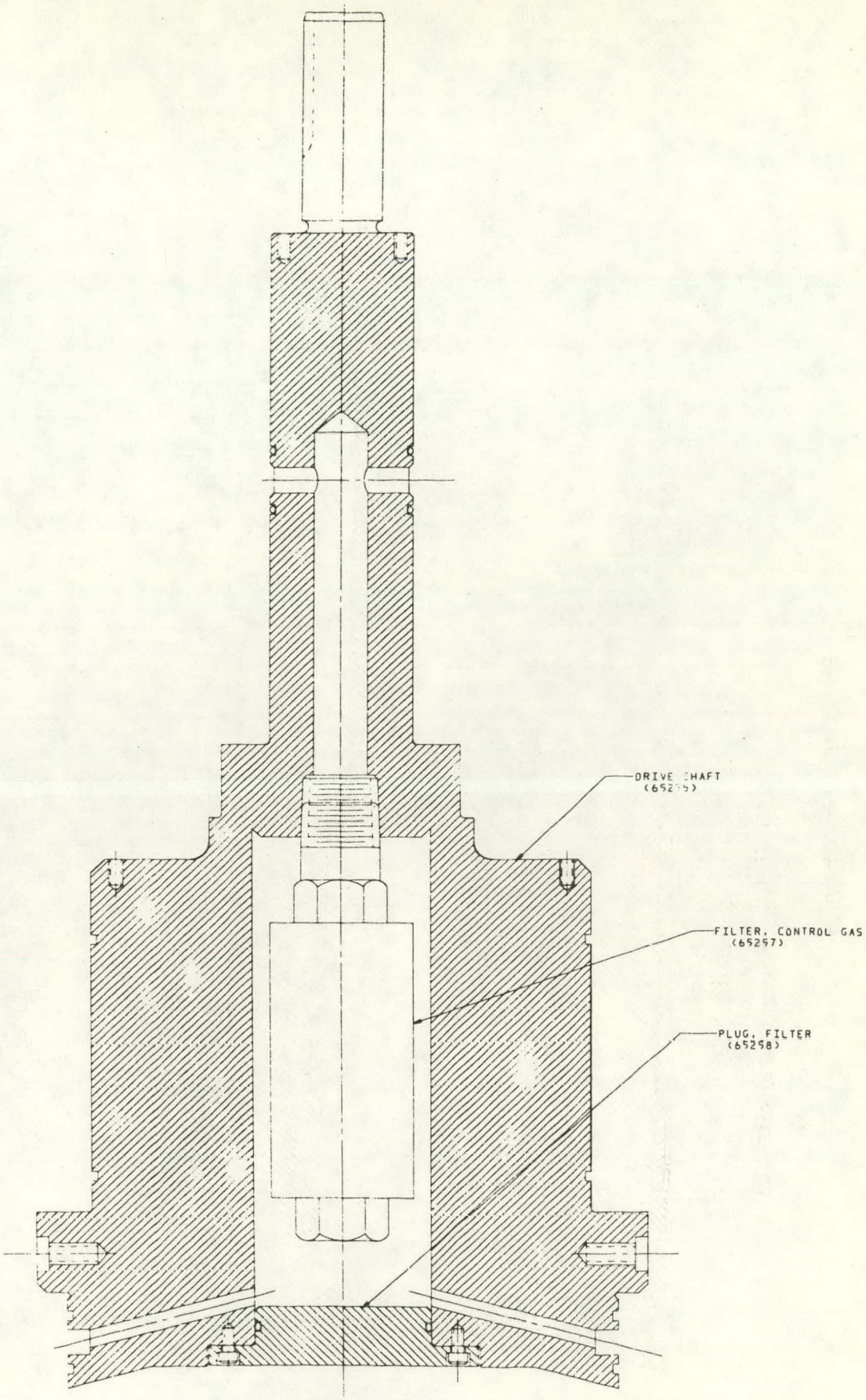

FIGURE B-36
DRIVE SIDE SUB-ASSEMBLY, DISASSEMBLY PROCEDURE
STEP 7: UNFASTEN & REMOVE FILTER PLUG. REMOVE FILTER

Appendix C

DESIGN SPECIFICATIONS AND OPERATING INSTRUCTIONS FOR THE MODEL NO. 6 KINETIC EXTRUDER

Prepared for the United States
Department of Energy
Under Contract DE-AC21-82MC19299

Sunnyvale, California 94086

CONTENTS

Section		Page
1	INTRODUCTION AND SYSTEM DESCRIPTION	1
	1.1 Coal Loading System	4
	1.2 Storage Vessel	4
	1.3 Feed Hopper	4
	1.4 Kinetic Extruder (KE) System	5
	1.5 Drive System	7
	1.6 Rotor Eye Suction System	9
	1.7 KE Gas Systems	9
	1.8 KE Receiver Vessel	10
	1.9 Main Baghouse	10
	1.10 Seal Buffer Gas and Purge Gas System	10
	1.11 N_2 Supply System	10
	1.12 Controls and Instrumentation System	12
2	KINETIC EXTRUDER START-UP, SHUTDOWN AND OPERATING PROCEDURES	20
	2.1 Start-up and Steady State Test Procedure for the KE Unit	20
	2.2 Shutdown Procedure for the KE Unit	23
	2.3 Coal Transfer Procedures	27
	2.4 Emergency Shutdown Procedure for the KE Unit	31
3	SAFETY PRECAUTIONS	32
	3.1 Purpose	32
	3.2 Overview	32
	3.3 Emergency Operations	32
	3.4 General Precautions	33
	3.5 Coal Dust Storage and Handling	34
	3.6 Coal Dust Disposal	34
	3.7 Eye and Ear Protection	35
	3.8 Operations	35
	3.9 Commercial Installation	35

ILLUSTRATIONS

Figure		Page
1-1	Test Loop	2
1-2	Systems Flow Sheet	3
1-3	Lockheed Kinetic Extruder	6
1-4	Rotor Bearing Seal Assembly	8
1-5	Schematic of Seal Buffer Gas System	11

TABLES

Table		Page
1-1	Instruments List	13
2-1	Initial Valve Positions Before Start-up	21
2-2	KE Unit Start-up and Steady State Testing	24
2-3	KE Shutdown Procedure	26
2-4	Recycle Coal from Receiving Hopper (R.H.) to Feed Hopper (F.H.) while Running KE Unit	28
2-5	Coal Transfer from Feed Hopper (F.H.) to Storage Hopper (S.H.)	28
2-6	Transfer Coal From Storage Hopper to KE Feed Hopper	30
2-7	KE Emergency Shutdown Procedure	31

Section 1
INTRODUCTION AND SYSTEM DESCRIPTION

In general, a Kinetic Extruder (KE) coal-pressurizing system consists of a number of subsystems in addition to the KE unit itself. These subsystems include (1) a transport system for bringing the coal to and from the KE unit, (2) a prime mover for supplying the required power to the KE, (3) a seal buffer gas system for the seals, (4) a gas supply system for controlling the receiver pressure, supplying purge and fluidizing gases and providing control gas for turn-down control, (5) a rotor suction system to maintain the desired rotor inlet pressure, and (6) an instrumentation and control system to provide operation of the system. In addition, the present 1-TPH KE test loop has extra systems for coal handling, coal recycling, and gas cleanup.

The physical layout of the KE and its test loop is illustrated in Fig. 1-1. Figure 1-2 shows the principal schematic for the coal and gas process lines. The KE and test loop can be broken down into 12 fairly distinct components or subsystems, as follows:

1. Coal Loading System
2. Storage Vessel
3. Feed Hopper
4. Kinetic Extruder (KE)
5. Drive System (Diesel-Hydraulic)
6. Rotor Eye Suction System
7. KE Gas Systems
8. KE Receiver Vessel
9. Main Baghouse
10. Seal Buffer Gas System
11. N_2 Supply System
12. Controls and Instrumentation System

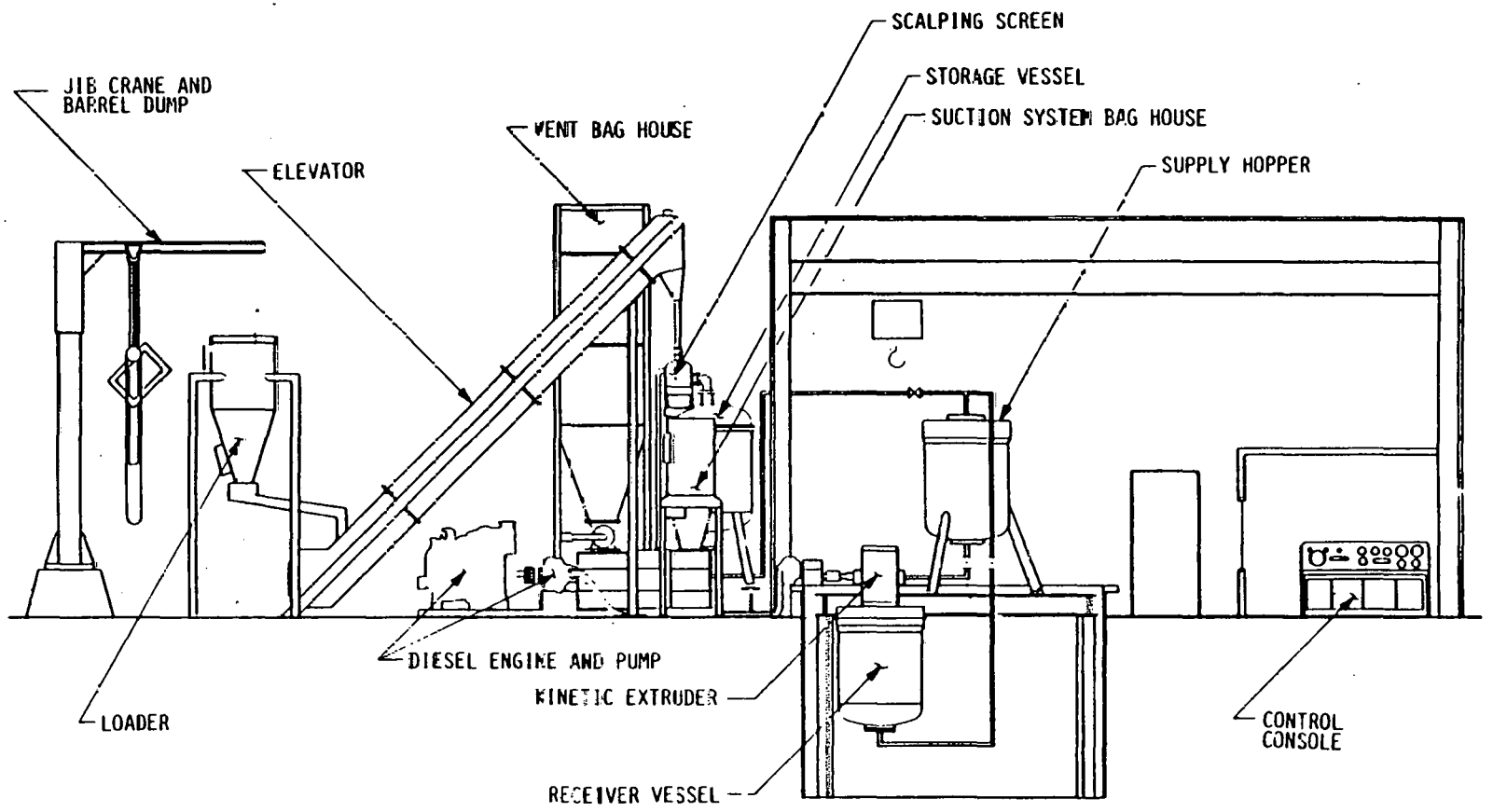

Fig. 1-1 Test Loop

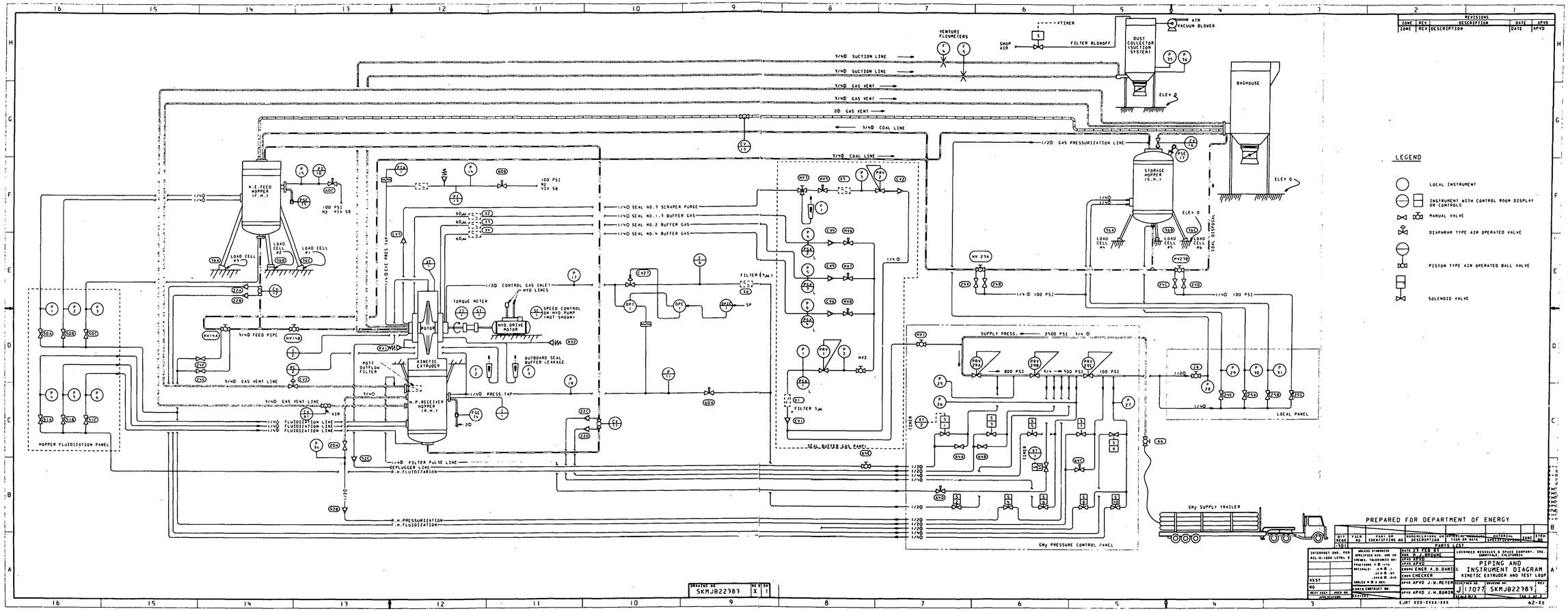

C-3

Fig. 1-2 Systems Flow Sheet

These individual subsystems are described in the following sections:

1.1 COAL LOADING SYSTEM

Coal is loaded into the storage vessel by means of a system consisting of a barrel dump, vibratory feeder, cleated elevator, and a vibrating scalping screen. The barrel dump forms the inlet to the process. Thereafter, the coal is metered onto a Flexowall cleated elevator by a FMC Syntron vibrating feeder. The elevator feeds through a Sweco 24-in. vibrating screen (18 mesh) and into the storage vessel. The scalping screen prevents any oversize particles or tramp material from entering the test loop.

Once inside the storage vessel, the feedstock is transferred into the feed hopper by dense-phase pneumatic transport.

1.2 STORAGE VESSEL

A storage vessel (of 50-ft^3 volume) receives the coal upon initial loading. After loading, the coal-inlet connection is closed by a blind flange so that the vessel can be fluidized and pressurized for transfer of its coal load to the KE feed hopper. The coal transfer lines used are shown in Fig. 1-2. Process flows into and out of the storage vessel are controlled from a local panel near the vessel.

1.3 FEED HOPPER

A 50-ft^3 feed hopper serves as the fluidized vessel which feeds coal to the suction side of the KE. This vessel is mounted on weigh cells which provide the primary measurement of the quantity of coal pumped in a particular test. The main process line valves connected to the feed hopper are equipped with remote operators so that the unit can be started and stopped from the control room.

1.4 KINETIC EXTRUDER (KE) SYSTEM

The KE system employs centrifugal force generated by the rotation of a high-speed rotor designed to pump pulverized coal into a high-pressure region. The KE rotor is illustrated by the cutaway drawing in Fig. 1-3.

The system consists of high-speed rotor, rotor casing, shaft, bearings, shaft seals, control gas seals, inlet feed pipe, and base support structure. The rotor casing is mounted immediately on top of the pressurized receiving hopper.

The following data are descriptive of the 1-TPH (nominal) KE unit tested in this program:

• Capacity (TPH)	2.0
• Rotor diameter (in.)	28
• Rotor speed (rpm)	3,600 (max)
• Turndown ratio	3:1
• Pressure (psig)	
- Inlet	Atmospheric
- Outlet	400
• Pressurization gas	Nitrogen
• Bearings type	Ball
• Sealing	Mechanical Crane Type 28 End Face Gas Seals
• Rotor power (hp)	80
• Sprue parameters:	
No. of sprues or channels	12
- Length (in.)	8.75
- Inlet radial position (in.)	4
- Outlet diameter (in.)	0.32
• Control Nozzle	
- Length (in.)	1.39
- Outlet diameter (in.)	0.087

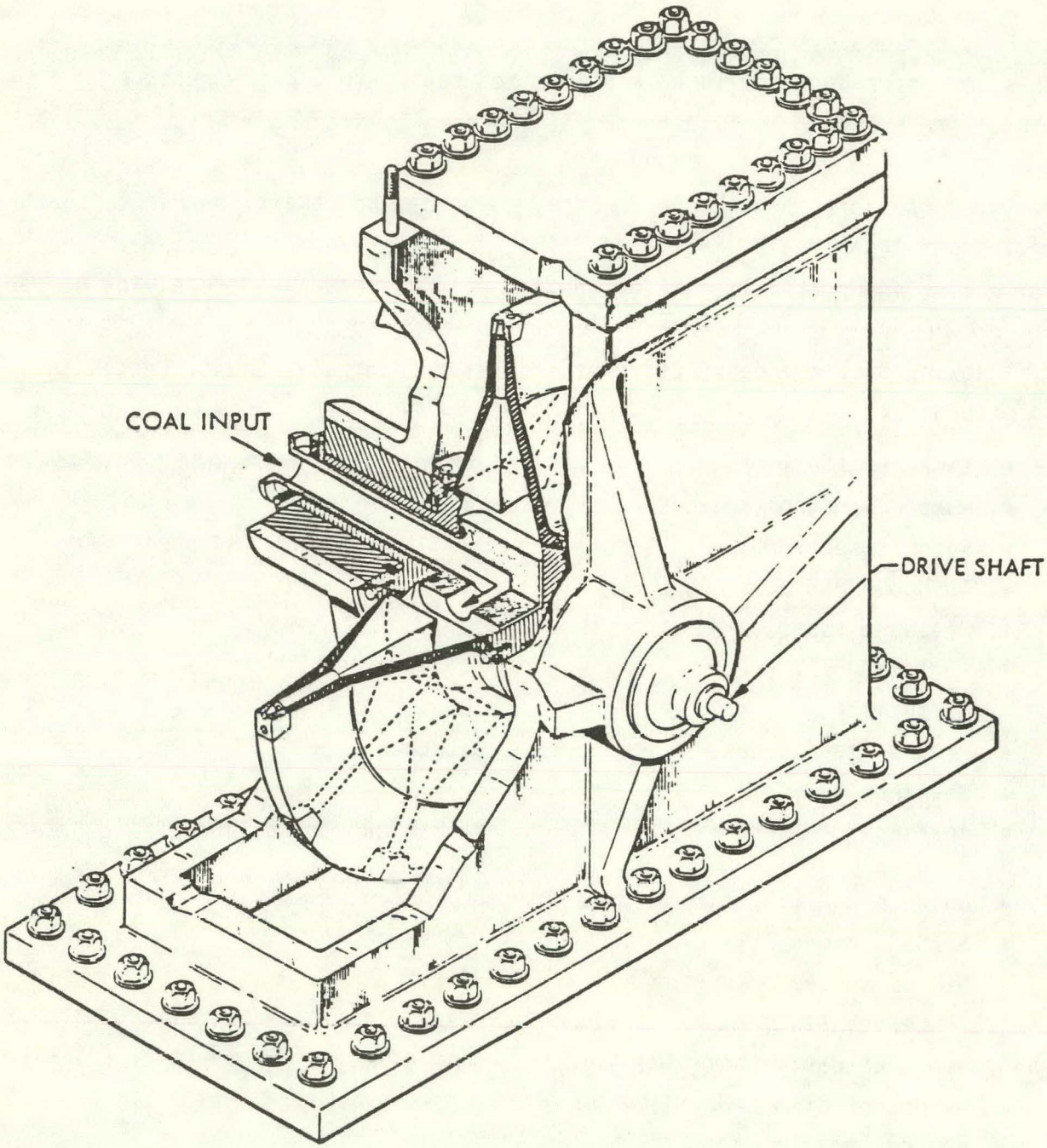

Fig. 1-3 Lockheed Kinetic Extruder

Start-up of the Kinetic Extruder, that is, the establishment of the moving coal plugs in the sprues, must take place at zero back pressure. To bring the Kinetic Extruder unit online, the coal flow is started by opening the feed valve CV 12 while the rotor housing is at ambient pressure. Once the coal plugs are established, the unit is presurized to the test level. To shut the feeder down, the procedure is reversed. The housing is depressurized, and then the coal flow through the rotor is shut off by closing valve CV 12.

Bearings and Seals

The bearing and sealing assembly for the KE has been upgraded for the present programs. The physical arrangement of the ports now used is shown in Fig. 1-4. The high-pressure buffer gas enters through ports at a pressure of about 475 psi. As shown in Fig. 1-4, port No. 1 admits buffer gas to seals 1 and 3. Gas leaking through seal 1 is partly vented into the high pressure housing and partly vented to the atmosphere through port No. 2. Leakage from seal 3 is partly vented into the rotor eye and partly through port No. 2. Purge gas is introduced for the seal 3 through port No. 7.

The buffer gas for seal 2 is admitted through port No. 3. The leakage is partly vented into the housing and partly vented into the atmosphere through port No. 4. Buffer gas is admitted through ports 5 and 6 for seal 4. Leakage is partly vented into the control gas passage, partly to atmosphere by leakage past the shaft and partly vented through port No. 4.

Control gas for the fluidic coal flow control is admitted through port No. 8. Details of the design are shown in Appendix A.

1.5 DRIVE SYSTEM

An Allison Detroit Diesel (Model 5063-5398 Ser. 6D-70210) engine is presently installed as the system's prime mover. The drive train includes Dynapower Model 120 PV hydraulic pump and motor units, as well as a V-belt 2.9:1 speed increaser. The maximum useful power that can be delivered to the KE shaft is 80 hp.

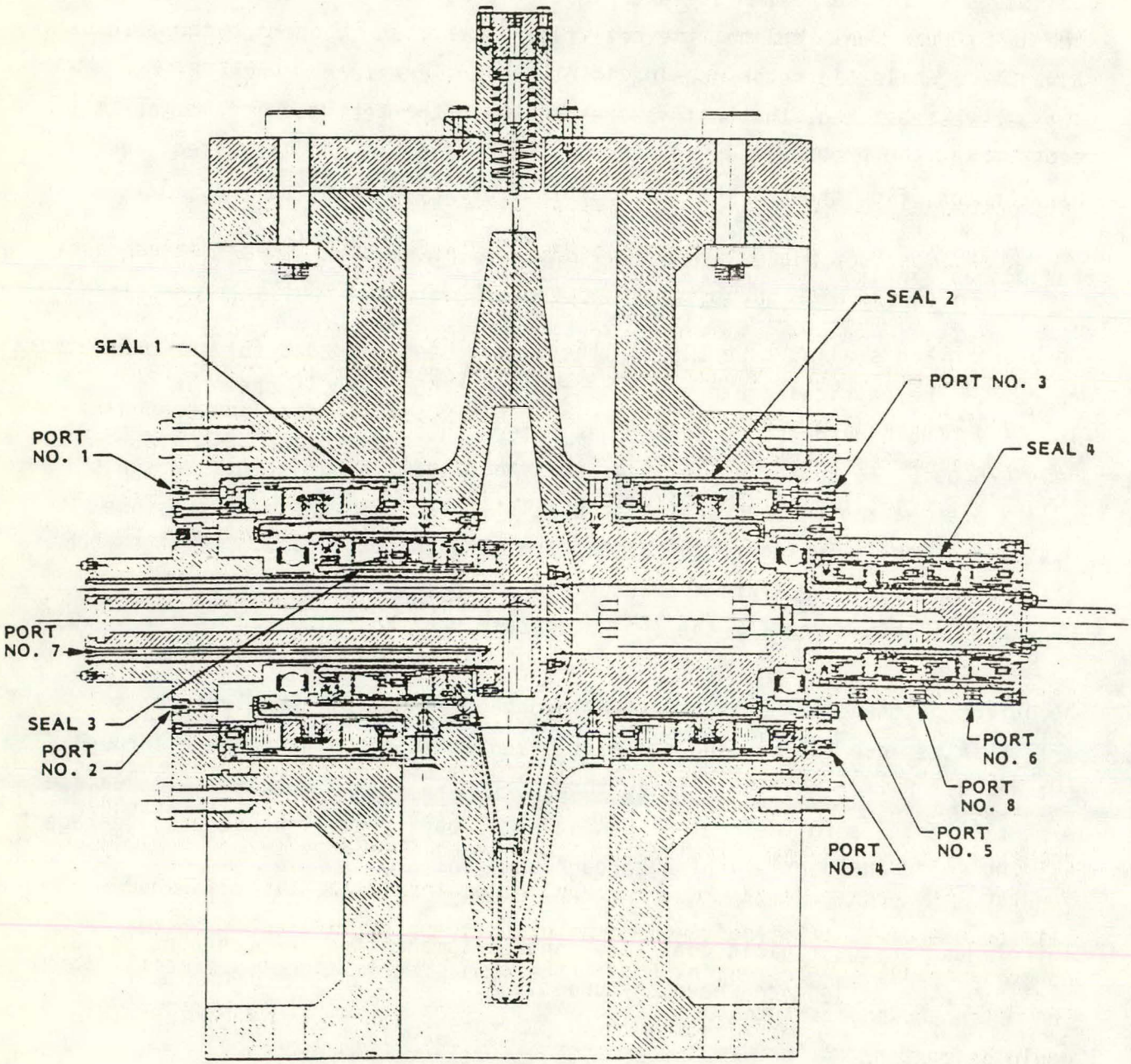

Fig. 1-4 Rotor Bearing Seal Assembly

1.6 ROTOR EYE SUCTION SYSTEM

The purpose of the rotor eye suction system, shown in Fig. 1-2, is to maintain a negative pressure at the eye of the rotor by drawing off excess gases. Some coal dust is carried out along with the gases and provision for cleanup of this coal must be included.

This suction system presently consists of the following:

1. A Super Jet Model 16003.2 Cylindrical, Hi-Vacuum Filter Receiver dust collector with 60-deg cone hopper and leg set. Twelve ft^2 of cloth area is provided by 3 ea. 2-ft long Dacron Polyester bags.
2. Sutorbilt 2 MVB Vacuum Blower (Roots Type) Assembly with 230/3/60, TEFC, 2-hp electric motor drive, with outlet silencer and secondary air filter; the blower package is rated at 20 SCFM at 10 in. Hg.
3. A Series 13 HD/DT Rotary Airlock, 0.1 CFR, 30 in. Hg rating, cast iron, housing, round inlet/sq outlet, 8-vane open-end rotor with flat tips. Complete with OSHA drive and guards and 1/2 hp Right Angle Gear Motor.

1.7 KE GAS SYSTEMS

The gas systems denote the auxiliary gas piping and instrumentation that is required for the KE, as shown in Fig. 1-2. Basically, the Kinetic Extruder pumps only coal; the gas flow through the sprues is always zero or nearly so. However, high-pressure gas must be supplied to pressurize the void space between the coal particles. A portion of this gas is injected into the control nozzles as "control gas," and the remainder is injected directly into the rotor housing as "pressurization gas." In an actual plant, both flows would be continuous, but in the present batch-type test loop the "pressurization gas" flow is shut off once the receiver vessel has reached the desired test pressure. Thereafter, gas must be bled off through CV 37 to maintain constant receiver vessel pressure.

A low-pressure gas supply (approximately 100 psig) is also required for feed-hopper fluidization, and purge gas for the coal feed lines and suction lines as needed.

1.8 KE RECEIVER VESSEL

A 50-ft^3 receiver vessel is attached directly below the KE rotor casing and serves as a high-pressure reservoir for the coal pumped through the rotor. After a test run, the receiver vessel is fluidized and its contents recycled back to the feed hopper by opening CV 11.

1.9 MAIN BAGHOUSE

A main baghouse (Micro D Pulseaire Collector Model Number 365-8) is provided for dust removal from all gas streams discharged from the test loop.

1.10 SEAL BUFFER GAS AND PURGE GAS SYSTEM

A detail flow diagram for the Seal Buffer Gas System is shown in Fig. 1-5. The interface with the Kinetic Extruder is identified by the port number which corresponds to the numbering system used in Fig. 1-2.

1.11 N_2 SUPPLY SYSTEM

A GN_2 supply trailer of approximately 50,000-SCF capacity is used as the primary gas supply for the test loop. The trailer is connected to an initial three-regulator mainfold which supplies gas to the process at the three pressure levels required. These are approximately 800 psig for the sprue deplugger, 500 psig for receiver pressurizing and control gas, and 100 psig for the low-pressure system requirements.

1.12 CONTROLS AND INSTRUMENTATION SYSTEM

The main control instruments and console layout are shown in the Fig. 1-2 System Flow Sheet. A listing of instruments is given in Table 1-1. The KE

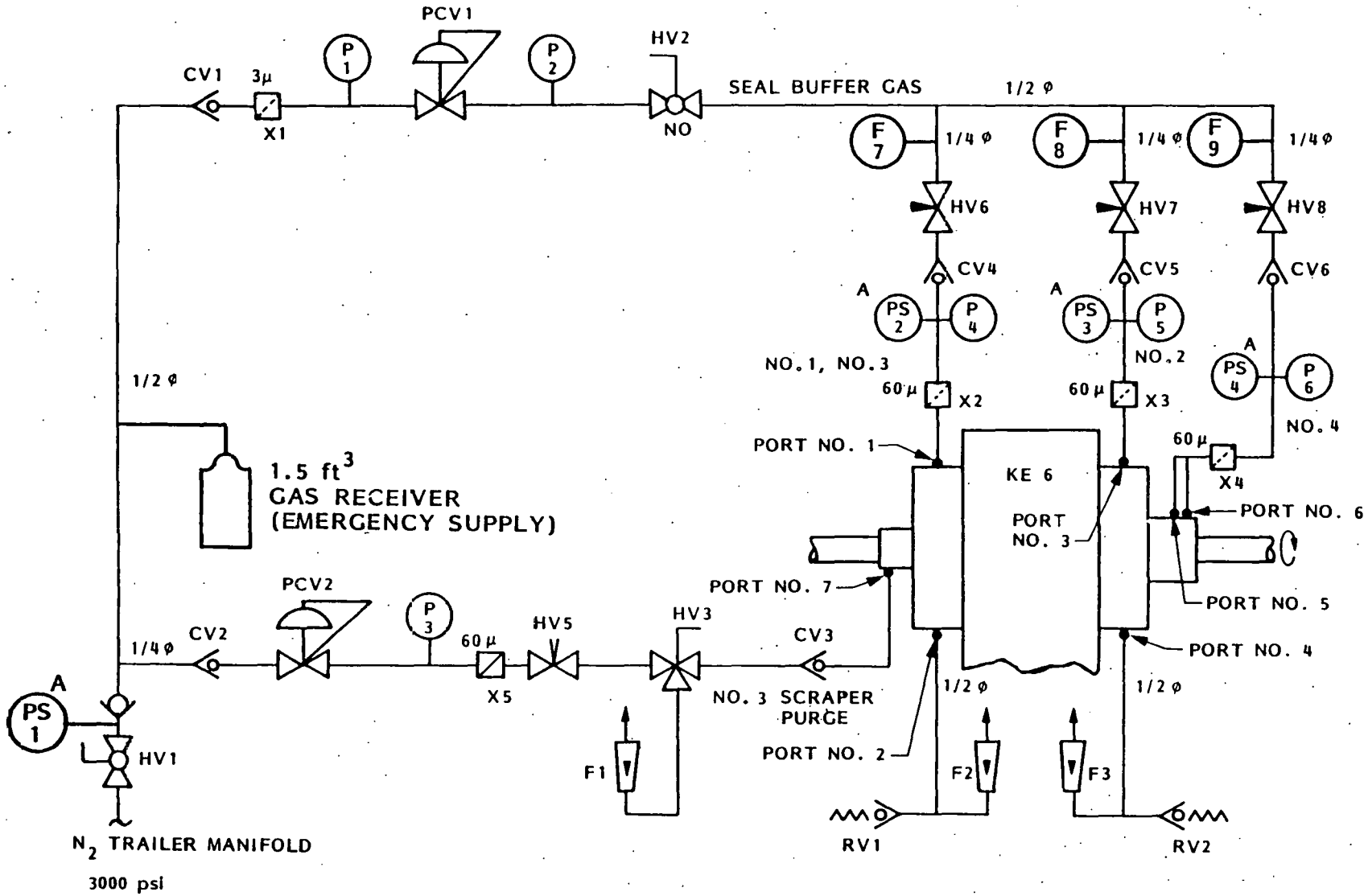

Fig. 1-5 Schematic of Seal Buffer Gas System

Table 1-1 INSTRUMENTS LIST

Tag No.	Service	Mfg/Specs
	KINETIC EXTRUDER GROUP	
ZT-1	Torque Meter	Lebow Model 1605
ST-1	Speed Pickup	
XF-1	Sprue Flow Detector	PCB Model No. 121A02
T1	Thermocouple - Receiver	
T2	Thermocouple - Rotor Eye	
PIA 1	Pressure Indicator/Alarm-Rotor Eye	Foxboro Models E11AH, 65H, 63R
DPT 1	Differential Pressure Transmitter	Foxboro Model 11DM
DPC 1	Differential Pressure Controller	Foxboro Model 43AP
DPIC 1	Indicator and Loading Station	Foxboro No. 135TG
F6	Flowmeter - Control Gas	Cox Model GL8-4
X6	Filter - Control Gas	Norman No. 4352 (3)
P17	Pressure Gage	600 psi
CV2	Pneu. Control Valve - R.H. Vent	Fisher No. 657EZ, 3/4 in. Body, 1/4 in. trim
CV11	Pneu. Control Valve - Recycle Pipe	Kamyr Ball Valves - 3/4 in.
CV12	Pneu. Control Valve - Feed Pipe	Kamyr Ball Valve - 34 in.
CV27	Pneu. Control Valve-Control Gas	Foxboro No. V4A (C = 0.28)
HV14A	Manual Valve - Coal Line	Kamyr Ball Valve - 3/4 in.
HV14B	Manual Valve - Coal Line	Kamyr Ball Vale - 3/4 in.
22A	Check Valve - Gas Purge	1/4 in.
22B	Check Valve - Gas Purge	1/4 in.
22C	Check Valve - Gas Purge	1/4 in.
22D	Check Valve - Gas Purge	1/4 in.
24F	Manual Valve - Gas purge	1/4 in. Ball Valve
24G	Manual Valve - Gas Purge	1/4 in. Ball Valve
52B	Check Valve - R.H. Pressurize	1/2 in.

Table 1-1 INSTRUMENTS LIST (Cont.)

Tag No.	Service	Mfg/Specs
	KINETIC EXTRUDER GROUP (Cont.)	
52C	Check Valve - Deplugger	1/2 in.
20H	Manual Valve - Shutoff	1/2 in.
P11	Pressure Gage	600 psi
PT13	Pressure Transmitter	-
P14	Pressure Gage	600 psi
P19	Pressure Gage	600 psi
P34	Pressure Gage	600 psi
PSE74	Rupture Disc - Safety Relief	822 psi burst
60A	Manual Valve - Bleed	1/4 in.
60B	Manual Valve - Bleed	1/4 in.
PC2	Pressure Controller - RH	Fisher Model No. 4150-R
	SEAL BUFFER GAS SYSTEMS GROUP	
HV1	Manual Valve - Panel Supply	1/2 in. Ball Valve
HV2	Manual Valve - Shutoff	Whitey No. SS-44F4
HV3	Manual Valve - 3 way	Whitey No. SS-43X54
HV5	Manual Valve - Flow Regulating	Nupro No. SS-4MG
HV6	Manual Valve - Flow Regulating	Nupro No. SS-4L (C = 0.15 max)
HV7	Manual Valve - Flow Regulating	Nupro No. SS-4L (C = 0.15 max)
HV8	Manual Valve - Flow Regulating	Nupro No. SS-4L (C = 0.15 max)
CV1	Check Valve	Nupro No. SS-4C4-10
CV2	Check Valve	Nupro No. SS-4C-10
CV3	Check Valve	Nupro No. SS-4C-1

Table 1-1 INSTRUMENTS LIST (Cont.)

Tag No.	Service	Mfg/Specs
	SEAL BUFFER GAS SYSTEMS GROUP (Cont.)	
CV4	Check Valve	Nupro No. SS-4C-1
CV5	Check Valve	Nupro No. SS-4C-1
CV6	Check Valve	Nupro No. SS-4C-1
P1	Pressure Gage	Marsh No. H2078 (3000 psi)
P2	Pressure Gage	Marsh No. H2064 (600 psi)
P3	Pressure Gage	Marsh No. H2064 (600 psi)
P4	Pressure Gage	Marsh No. H2064 (600 psi)
P5	Pressure Gage	Marsh No. H2064 (600 psi)
P6	Pressure Gage	Marsh No. H2064 (600 psi)
F1	Rotameter-Scraper Purge	DWYER No. RMB-56-SSV
F2	Rotameter-Outboard Seal Leakage	DWYER No. RMB-55-SSV
F3	Rotameter-Outboard Seal Leakage	DWYER No. RMB-55-SSV
PSA-1	Pressure Switch - Alarm	SOR No. 1T-E5-GG
PSA-2	Pressure Switch - Alarm	SOR No. 5T-E45-GG
PSA-3	Pressure Switch - Alarm	SOR No. 5T-E45-GG
PSA-4	Pressure Switch - Alarm	SOR No. 5T-E45-GG
X1	Filter - Seal Buffer Gas	Norman No. 4532 (3)
X2	Filter	Nupro No. SS-4F2-60 (60)
X3	Filter	Nupro No. SS-4F2-60 (60)
X4	Filter	Nupro No. SS-4F2-60 (60)
X5	Filter	Nupro No. SS-4F2-60 (60)
CV1	Check Valve	Nupro No. SS-4C4-10
CV2	Check Valve	Nupro No. SS-4C-10
CV3	Check Valve	Nupro No. SS-4C-1
CV4	Check Valve	Nupro No. SS-4C-1
CV5	Check Valve	Nupro No. SS-4C-1
CV6	Check Valve	Nupro No. SS-4C-1

Table 1-1 INSTRUMENTS LIST (Cont.)

Tag No.	Service	Mfg/Specs
	SEAL BUFFER GAS SYSTEMS GROUP (Cont.)	
RV1	Relief Valve	Nupro No. B-8C-10
RV2	Relief Valve	Nupro No. B-8C-10
PRV1	Pressure Regulator	Grove Model No. 15 LH
PRV2	Pressure Regulator	Grove Model No. 15 LH
F7, F8, F9	Rotameters - Seal Inflows	Brooks Model No. 3602
	FEED HOPPER GROUP	
P1	Pressure Gage	60 psi
P2	Pressure Gage	60 psi
P3	Pressure Gage	60 psi
P4	Pressure Gage	600 psi
P5	Pressure Gage	600 psi
P6	Pressure Gage	600 psi
P15	Pressure Gage	60 psi
PT10	Pressure Transmitter	
36A	Weigh Cell	BLH-10000 lb
36B	Weigh Cell	BLH-10000 lb
36C	Weigh Cell	BLH-10000 lb
50A	Manual Valve-Flow Regulating	1/4 in.
50B	Manual Valve-Flow Regulating	1/4 in.
50C	Manual Valve-Flow Regulating	1/4 in.
51A	Manual Valve-Flow Regulating	1/4 in.
51B	Manual Valve-Flow Regulating	1/4 in.
51C	Manual Valve-Flow Regulating	1/4 in.
60C	Manual Valve-Bleed	1/4 in.
PSE-75	Rupture Disc-Safety Relief	822 psi burst
CV13	Pneumatic Control Valve-F.H. Gas Outlet	Century Ball Valve - 2 in.

Table 1-1 INSTRUMENTS LIST (Cont.)

Tag No.	Service	Mfg/Specs
	STORAGE HOPPER/SUCTION SYSTEM GROUP	
CV16	Pneumatic Valve - Gas Vent	Century Ball Valve, 3/4 in.
PSE17	Rupture Disc - Safety Relief	Continental - 1 1/2 in., 150 psi burst
HV23A	Manual Valve - Coal Line	Jamesbury Ball Valve, 3/4 in.
HV23B	Manual Valve - Coal Line	Jamesbury Ball Valve, 3/4 in.
24A	Manual Valve - Purge	Matheson No. 7115, 1/4 in. ball
24B	Manual Valve - Purge	Matheson No. 7115, 1/4 in. ball
24C	Manual Valve - Purge	Matheson No. 7115, 1/4 in. ball
24D	Manual Valve - Purge	Matheson No. 7115, 1/4 in. ball
24E	Manual Valve - Flow Regulating	Matheson No. 177, 1/4 in.
25A	Manual Valve - Flow Regulating	Matheson No. 177, 1/4 in.
25B	Manual Valve - Flow Regulating	Matheson No. 177, 1/4 in.
25C	Manual Valve - Shutoff	Matheson, 1/4 in. ball
26	Manual Valve - Shutoff	Matheson, 1/2 in. ball
P28	Pressure Gage	200 psi
P29	Pressure Gage	200 psi
P30	Pressure Gage	200 psi
P31	Pressure Gage	200 psi
36A	Weigh Cell - Hopper	BLH - 10000 lb
36B	Weigh Cell - Hopper	BLH - 10000 lb
36C	Weigh Cell - Hopper	BLH - 10000 lb
F4	Flowmeter - Suction Line	Venturi - 10 SCFM
F5	Flowmeter - Suction Line	Venturi - 10 SCFM

Table 1-1 INSTRUMENTS LIST (Cont.)

Tag No.	Service	Mfg/Specs
	STORAGE HOPPER/SUCTION SYSTEM GROUP (Cont.)	
P35	Pressure Gage	Compound - 30 in. x 30 psi
P36	Pressure Gage	Compound - 30 in. x 30 psi
	GN_2 PRESSURE CONTROL PANEL GROUP	
S-1	Solenoid Valve - Deplugger	Atkomatic Model 6200, 1/2 in.
S-2	Solenoid Valve - Control Gas Supply	Atkomatic Model 6000, 1/4 in.
S-3	Solenoid Valve - R.H. Fluidization	Atkomatic Model 6000, 1/4 in.
S-4	Solenoid Valve - R.H. Pressurization	Atkomatic Model 6000, 1/4 in.
S-5	Solenoid Valve - Recycle Line Purge (Down)	Atkomatic Model 6000, 1/4 in.
S-6	Solenoid Valve - Recycle Line Purge (Up)	Atkomatic Model 6000, 1/4 in.
S-7	Solenoid Valve - F.H. Fluidization	Atkomatic Model 6000, 1/4 in.
S-8	Solenoid Valve - Low Pres. Supply	Atkomatic Model 6000, 1/4 in.
S-9	Solenoid Valve - Feed Pipe Purge (Down)	Atkomatic Model 6000, 1/4 in.
S-10	Solenoid Valve - Feed Pipe Purge (Up	Atkomatic Model 6000, 1/4 in.
S-35	Solenoid Valve - Filter blowoff	Atkomatic Model 6000, 1/4 in.
XT-1	Cycle Timer - Filter blowoff	ATC Model 342A
XT-2	Cycle Timer - Deplugger interval	ATC Model 342A
P-25	Pressure Gage	1000 psi
P-26	Pressure Gage	600 psi
P-27	Pressure Gage	300 psi
PRV29A	Pressure Regulator	Grove Model 302G
PRV29B	Pressure Regulator	Grove Model 302G

Table 1-1 INSTRUMENTS LIST (Cont.)

Tag No.	Service	Mfg/Specs
	GN_2 PRESSURE CONTROL PANEL GROUP (Cont.)	
PRV29C	Pressure Regulator	Grove Model 302G
64A	Manual Valve-Bypass bleed	1/4 in. Needle
64B	Manual Valve-Bypass bleed	1/4 in. Needle
64C	Manual Valve-Bypass bleed	1/4 in. Needle
64D	Manual Valve-Flow regulating	1/4 in. Regulating
64E	Manual Valve-Emergency Shutoff	1/2 in. Ball
66	Manual Valve-Main Shutoff	1/2 in. Ball

and the major portion of the test loop are not automated, but are set up to be manually operated from the control room during test runs. Process valves associated with running the KE, pressurizing and depressurizing the receiver hopper, and recycling coal from the receiver back to the feed hopper, are remotely operable from the control room. Pilot-operated solenoid valves (S1-S10 in Fig. 1-2) are used in the clean N_2 process lines, while pneumatic actuators are used for coal lines or dirty gas lines.

Initial set-up and powering up of systems is by local controls. Secondary tasks such as transfer of coal between the feed and storage hoppers also are carried out locally.

Section 2

KINETIC EXTRUDER START-UP, SHUTDOWN AND OPERATING PROCEDURES

The various procedures can be summarized as follows:

1. KE Start-up and Steady State Test Procedure. This will require certain preadjusted positions for the valves in the system before start-up can begin.
2. KE Shutdown Procedure. This procedure is to be followed when the unit is stopped under normal conditions.
3. Coal Transfer Procedures. These procedures are to be followed when coal is pneumatically transferred between the storage, feed, and receiving hoppers. There are three modes of transfer:

3.1	Recycle from receiving hopper to feed hopper
3.2	Transfer from feed hopper to storage hopper (with and without water addition)
3.3	Transfer from storage hopper to feed hopper

4. Emergency Shutdown Procedure. This procedure will depressurize the receiving hopper and stop the rotor in as short a time as possible.

2.1 START-UP AND STEADY STATE TEST PROCEDURE FOR THE KE UNIT

Preadjustments:

For initiating the start-up procedure, all valve positions should be as shown in Table 2-1. These positions generally correspond to the situation at the moment following a KE shutdown. Check and verify these positions before proceeding with start-up. Instrument numbers refer to Flow Sheet Dwg. No. SKMJB22383 (Fig.1-2) and Instrument List Table 1-1.

Table 2-1 INITIAL VALVE POSITIONS BEFORE START-UP

Item	Valve or Instrument	Flow Sheet Number	Valve Position or Setting
1	F.H. Gas Vent Valve	CV 13	Open
2	KE Feed Line Valve	CV 12	Closed
3	Main Gas-Supply Valve	66	Open
4	R.H. Vent Valve	CV 61	Open
5	Deplugger Valve	S1	Closed
6	Deplugger Bypass Needle Valve	64A	Open 1/2 turn
7	High-Pressure Fluidization ON/OFF Valve	S3	Closed
8	High-Pressure Fluidization Bypass Needle Valve	64B	Open 1 turn
9	Recycle Line Purge Valve (Up)	S10	Closed
10	Recycle Line Purge Valve (Down)	S9	Closed
11	High-Pressure Console Supply Valve	S2	Open
12	R.H. Pressurization	S4	Closed
13	Low-Pressure Fluidization ON/OFF Valve	S7	Closed
14	Low-Pressure Fluidization Bypass Needle Valve	64C	Open 4 turns
15	Low-Pressure Console Supply Valve	S8	Open
16	KE Feed-Pipe Purge (Up)	S10	Closed
17	KE Feed-Pipe Purge (Down)	S9	Closed
18	R.H. Fluidization Valves (Inner Ring)	51C	Set for P_1 = 20 psi
19	R.H. Fluidization Valves (Middle Ring)	51B	Set for P_1 = 20 psi

F.H. = KE Feed Hopper (Upper Tank)
R.H. = KE Receiving Hopper (Lower Tank)
S.H. = Storage Hopper

Table 2-1 (Cont.)

Item	Valve or Instrument	Flow Sheet Number	Valve Position or Setting
20	R.H. Fluidization Valves (Outer Ring)	51A	Set for P_1 = 20 psi
21	F.H. Fluidization Valves (Inner Ring)	50C	Set for P_1 = 25 psi
22	F.H. Fluidization Valves (Middle Ring)	50B	Set for P_1 = 25 psi
23	F.H. Fluidization Valves (Outer Ring)	50A	Set for P_1 = 25 psi
24	Manual KE Feed-Pipe Valve	HCV 14B	Open
25	Manual Coal Feed-Pipe S.H. Branch Valve	HCV 14A	Closed
26	R.H. to F.H. Recycle Line Valve	CV11	Closed
28	R.H. Pressure Tap Bleed Valve	60A	Open 1 turn
32	Rotor Eye Pressure Tap Bleed Valve	60B	Open 1 turn
36	F.H. Pressure Tap Bleed Valve	60C	Open 1 turn
42	S.H. Coal-Pipe Valves	HCV 23A	Closed
43	S.H. Gas-Vent Valve	CV 16	Open
44	S.H. Fluidization Valve (Inner Ring)	24E	Cracked
45	S.H. Fluidization Valve (Middle Ring)	24A	Cracked
46	S.H. Fluidization Valve (Outer Ring)	24B	Cracked
47	S.H. Pressurization Valve	26	Closed
50	Hydraulic Motor Displacement	-	Zero
51	Diesel Engine Clutch	-	Disengaged
52	Suction System Filter Blowback Air Valve	-	Closed
53	Pulse Cycle Timer for R.H. Vent Filter	XT-1	Preset,off

Table 2-1 (Cont.)

Item	Valve or Instrument	Flow Sheet Number	Valve Position or Setting
54	N_2 Supply Valve for R.H. Filter Pulse	64D	Open N turns
	Pulse Cycle Timer for Deplugger	XT-2	Preset, off
	Control Gas Loader	DPIC-1	+1 psi
	Seal Buffer Supply Valve	HV1	Open (never close)
	Seal Buffer Supply Valve	HV2	Open
	Buffer Supply Regulator	PRV1	475 psi
	Scraper Purge Supply Regulator	PRV2	400 psi
	Scraper Purge Regulative Valve	HV5	Set for 360 SCFH
	Seal No. 1, 3 Reg. Valve	HV6	Open 9 turns
	Seal No. 2 Reg. Valve	HV7	Open 6 turns
	Seal No. 4 Reg. Valve	HV8	Open 3 turns

In addition, the following safety inspections must be made before start-up:

- Check suction and vent baghouse filters; empty them if required
- Check N_2 supply pressure (1000 psi minimum) and N_2 manifold pressures (800 psi, 500 psi, 100 psi). Adjust if required.
- Check instrument air pressure (20 psi). Adjust if required.
- Check diesel and hydraulic power transmission system for fuel level leaks, worn hoses and the like.
- Verify seal buffer N_2 pressures as soon as main N_2 valve (66) opened

2.2 SHUTDOWN PROCEDURE FOR THE KE UNIT

The procedure shown in Table 2-3 assumes the KE unit is initially operating at 50 psi in a condition corresponding to Table 2-2, Step 40.

Table 2-2 KE UNIT START-UP AND STEADY STATE TESTING

Step	Action Taken	Flow Sheet Number	Position or Setting
READY SYSTEM			
1	Check Seal Buffer System Pressures	P4, P5, P6	475
2	Check Scraper Purge	HV 3, F1	360 SCFH, On/Off
4	Switch on Main Baghouse Blower	-	On
5	Switch on Suction-System Blower	-	On
6	Switch on Suction-System Rotary Valve	-	On
7	Switch on Suction-System Pulse Air Timer	-	On
8	Open Suction-System Filter Blowback Air Supply Valve	-	Open
9	Start Diesel - Warmup	-	1,200 rpm
10	Engage Diesel Clutch	-	Engaged
11	Spin Rotor to 1,800 rpm via Displacement Speed Control Switch	-	1,800 rpm
12	Adjust Control Gas P to + 2 psi	DPIC-1	+ 2 psi
14	Set R.H. Pressure Controller to 50 psig (This will close valve)	PC2	50 psig
15	Start R.H. Filter Pulse	X11	Open
COAL FLOW START			
18	Open F.H. Fluidization Valve	S7	Open
19	Purge Feed Pipe (Down)	S9	Open - Close
20	Cycle Deplugger Valve Switch several times	S1	Open - Close Cycle
21	Purge Feed Pipe (Up)	S10	Open - Close

F.H. = KE Feed Hopper (Upper Tank)

R.H. = KE Receiving Hopper (Lower Tank)

S.H. = Storage Hopper

Table 2-2 (Cont.)

Step	Action Taken	Flow Sheet Number	Position or Setting
READY SYSTEM			
22	Open Coal Feed Valve to start coal flow	CV 12	Open
23	Monitor Rotor Eye Pressure (should drop to -10 in. Hg Vac)	13	
24	If Coal Flow fails to start, close F.H. Vent Valve and allow F.H. to pressurize to 5 psig to start coal flow	CV 13	Close - Open
25	Monitor Sprue Dectector and Set Deplugger on automatic timer	S1	Cycle
PRESSURIZE RECEIVER			
26	Close R.H. Vent Valve	CV 61	Close
27	Open R.H. Pressurization Valve until pressurized to 50 psi	S4	Open - Close
28	Reset Pressure Controller to test level	PC 2	As required
29	Increase Diesel rpm if required		
30	Readjust Control Gas Differential Pres. Controller if required	DPIC-1	As required
31	Increase rotor speed to maintain adaquate margin as R.H. pressure rises	ST-1	As required
	Monitor Seal Buffer Pressures and Flows	P4, P5, P6, F2, F3	As required
CONDUCT TEST			
32	Open R.H. Pressurization Valve until test pressure is reached	S4	Open - Close
33	Adjust Pressure Controller to maintain pressure	PC 2	Test pressure
34	Adjust Control Gas Differential Controller to obtain test coal throughput	DPIC-1	As required

Table 2-2 (Cont.)

Step	Action Taken	Flow Sheet Number	Position or Setting
35	Finalize Speed Setting	SC-1	As required
36	Record Data as Required During Steady State Test Run	-	As required
DEPRESSURIZE RECEIVER			
37	After test, reduce R.H. pressure to 50 psi by opening Vent Valve	CV 61	Open - Close
38	Reset Pressure Controller to maintain 50 psi	PC 2	50 psi
39	Reduce Speed to 1,800 rpm	SC-1	1,800 rpm
40	Reset Control Gas P to + 2 psi	DPIC-1	2 psi
41	Proceed with Coal Recycle or Shutdown Sequences as required	-	As required

Table 2-3 KE SHUTDOWN PROCEDURE

Step	Action Taken	Flow Sheet Number	Position or Setting
1	Open R.H. Vent Valve to bring Unit to atmospheric pressure	CV 61	Open
2	Allow pressure to drop to 5 psig or less	P11	
3	Close Coal Feed Valve	PCV 12	Close
4	Allow Rotor to drain free of Coal as Shown by Rotor Eye Pressure or Sprue Detector	PIA-1, XF1	
5	Cycle Deplugger several times as Required	S1	Open - Close Cycle
6	Purge Feed Pipe down	S5	Open - Close
10	Cycle Deplugger as required	S1	Open - Close Cycle

Table 2-3 (Cont.).

Step	Action Taken	Flow Sheet Number	Position or Setting
11	Stop Rotor via Hydraulic-Pump Displacement Control	SC-1	Zero displacement
12	Turn off F.H. Fluidization	S7	Close
14	Stop R.H. Filter Pulse	TT1	Close
15	Reduce Control-Gas Pressure to minimum	DPIC-1	Low
16	Disengage Diesel Clutch	-	Disengage
17	Stop Diesel	-	Stop
18	Close Suction System Filter Blowback Air Valve	64D	Close
19	Switch off Suction System Pulse Air Timer	-	Off
20	Switch off Suction System Blower	-	Off
21	Switch off Suction System Rotary Valve	-	Off
22	Switch off Main Baghouse Blower	-	Off
23	Close Main N_2 Supply Valve	66	Close
24	Allow N_2 System Pressure to bleed off	-	-

KINETIC EXTRUDER TEST LOOP OPERATING PROCEDURES

2.3 COAL TRANSFER PROCEDURES

Recycle coal from Receiver Hopper (R.H.) to KE Feed Hopper (F.H.). For the sequence of actions shown in Table 2-4, the initial condition corresponds to running at 50-psig pressure, 1,800 rpm (i.e., Table 2-2, Step 40).

Table 2-4 RECYCLE COAL FROM RECEIVING HOPPER (R.H.) TO FEED HOPPER (F.H.) WHILE RUNNING KE UNIT

Step	Action Taken	Flow Sheet Number	Position or Setting
1	Purge Recycle Line (Up)	S6	Open - Close
2	Fluidize R.H. - Open Valve S3	S3	Open
3	Open Recycle Line Valve	CV 11	Open
4	Continue Coal Recycle Until R.H. is empty of coal as shown by Level Sensor, Load Cells, or Gas Blowby Into F.H.		
5	Close Recycle Line Valve	CV 11	Close
6	Purge Recycle Line (Up)	S6	Open - Close
7	Purge Recycle Line (Down)	S5	Open - Close
8	Close R.H. Fluidization Valve	S3	Close
9	Proceed with Test or Shutdown as required		

Discharge coal from Feed Hopper to Storage Hopper. Initial state of system is to be put in shutdown mode with valve positions as in Table 2-1.

Table 2-5 COAL TRANSFER FROM FEED HOPPER (F.H.) TO STORAGE HOPPER (S.H.)

Step	Action Taken	Flow Sheet Number	Position or Setting
1	Close Manual KE Feed Pipe Valve	HV 14B	Close
2	Turn on Main Baghouse		On
3	Open F.H. Fluidization Valve - Fluidize F.H.	S7	Open
4	Purge S.H. Transfer Line	24F	Open - Close
5	Open S.H. Transfer Line Valve	HV 14A	Open
6	Purge Feed Pipe (Down)	S5	Open - Close
7	Close F.H. Vent Valve to pressurize F.H.	CV 13	Close
8	Allow F.H. to pressurize to 25 psig		25 psig
9	Purge Feed Pipe (Up)	S10	Open - Close

Table 2-5 (Cont.)

Step	Action Taken	Flow Sheet Number	Position or Setting
10	Open Coal Feed-Pipe Valve to start coal transfer	CV 12	Open
11	Adjust F.H. Fluidization Valve if necessary to maintain pressure	50A, 50B, 50C	Adjust as required
12	Continue Transfer until F.H. is empty as evidenced by Loss of F.H. pressure	10	-
13	Open F.H. Gas Vent Valve	CV 13	Open
14	Close Feed Pipe Coal Valve	CV 12	Close
15	Purge Feed Pipe (Up)	S10	Open - Close
16	Purge Feed Pipe (Down)	S9	Open - Close
17	Close F.H. Fluidization Valve	S7	Close
18	Reset Fluidization Valves as Required	50A, 50B, 50C	As required
19	Close S.H. Transfer Line Valve	HV 14A	Closed
20	Purge S.H. Transfer Line Valve	24F	Open - Close
21	Turn Off Main Baghouse	-	Off
22	Turn Off Main N_2 Supply Valve	66	Off

TRANSFER FROM STORAGE HOPPER (S.H.) TO FEED HOPPER (F.H.)

Most of these control actions are performed from the local panel near the storage hopper (See Table 2-6). The initial state of the system is that shown in Table 2-1.

Table 2-6 TRANSFER COAL FROM STORAGE HOPPER TO KE FEED HOPPER

Step	Action Taken	Flow Sheet Number	Position or Setting
1	Turn on Main Baghouse	-	On
2	Set S.H. Fluidization Valve (Inner Ring)	24E	Open L turns
3	Set S.H. Fluidization Valve (Outer Ring)	25A	Open M turns
4	Set S.H. Fluidization Valve (Middle Ring)	25B	Open N turns
5	Purge Coal Line (Down)	24A	Open - Close
6	Purge Coal Line (Up)	24B	Open - Close
7	Purge Coal Line (Up)	24C	Open - Close
8	Close S.H. Vent Valve	HV 16	Close
9	Open Gas Valve to Pressurize S.H. to 25 psig	26	Open - Close
10	When S.H. reach 25 psig, open Coal Valve	HV 23A	Open
11	Should Coal Flow Fail to Start, Close HV 23A and purge as required, Reopen HV 23A		-
12	Monitor S.H. Pressure and adjust Fluidization and Pressure as required	24E, 25A, 25B, 26	Adjust as Required
13	Relieve Pressure with Gas Vent if required	HV 16	Open - Close
14	After Coal Transfer is complete, Close Feed Line Valve	HV 23A	Close
15	Without delay, purge Coal Line	24A, 24B, 24C	Open - Close
16	Open S.H. Vent Valve to depressurize	CV 16	Open
17	Close Gas Pressurization Line (If Open)	26	Close
18	Close Fluidization Valves (Leave Cracked)	25A, 25B, 24E	Cracked
19	Repurge Coal Lines	24A, 24B, 24C	Open - Close
20	Turn Off Main Baghouse		Off
21	Turn Off Main N_2 Supply Valve	66	Off

2.4 EMERGENCY SHUTDOWN PROCEDURE FOR THE KE UNIT

In any emergency (e.g, blowback, rotor imbalance, vibration, gas/coal dust leak) the KE unit should be depressurized and stopped as shown in Table 2-7. In the event of power failure, process valves will fail safe. Diesel engine should then be unclutched and shut down manually.

Table 2-7 KE EMERGENCY SHUTDOWN PROCEDURE

Step	Action Taken	Flow Sheet Number	Position or Setting
1	Open R.H. Vent	CV-61	Open
2	Close R.H. Pressurization Valve (if open)	S4	Closed
3	Close R.H. Fluidization Valve (if open)	S3	Closed
4	Stop Rotor via Hydraulic Pump Displacement Control	0	Zero displacement
5	Open F.H. Vent Valve (if closed)	CV13	Open
6	Shut Main N_2 Supply Valve off only in Extreme Emergency (seals will be damaged without buffer gas)	66	Closed
7	Proceed with Normal Shutdown Procedures depending on exact circumstances		

Section 3
SAFETY PRECAUTIONS

3.1 PURPOSE

To apprise program personnel, the customer and any potential operators of minimum safety precautions to be employed whenever the 1 TPH KE is operated.

3.2 OVERVIEW

The 1 TPH KE has been analyzed to identify potential hazards associated with the equipment and its operation. These hazards have been resolved or minimized to the maximum extent possible within the scope of this technology demonstration program. The safe operation of this coal feeder facility depends on the practical judgment and knowledge of program personnel and operators. It is a management responsibility to ensure individuals working around or on the facility are aware of inherent risks involved in facility and equipment operations. As a minimum, fire, explosion, inhalation and noise hazards shall be discussed. Once introduced to the safety and health hazards presented by coal dust and the associated KE equipment, each individual is responsible for asserting all reasonable efforts to assure safe conditions and operations pursue.

3.3 EMERGENCY OPERATIONS

Experience shows that fire and explosion associated with pulverized fuel systems are most likely to occur during start-up or shutdown, or after an emergency shutdown. Personnel at the KE facility shall know the location and operation of fire fighting equipment and shall call the appropriate emergency organization (dial 117) whenever necessary.

At least one person who has memorized emergency shutdown conditions and procedures shall be present whenever the KE is in operation. Emergency shutdown procedures are specified in Section 2.4 and Table 2-7.

3.4 GENERAL PRECAUTIONS

Good housekeeping is essential. Old and new coal dust accumulations, solid and liquid combustibles and other materials not necessary for safe and efficient facility operation shall be removed as often as necessary. As a minimum, horizontal ledges of the building and equipment shall be cleaned weekly. Coal dust shall be removed by vacuum suctioned to a closed, vented 55-gal drum. Residual coal dust may be flushed away with water. In no case shall compressed air be used to remove coal dust accumulations since it creates dust clouds.

Severe injury and property damage can result from careless handling of unconfined pulverized fuel; therefore, extreme caution shall be used in cleaning out plugged parts of the system. Pulverized fuel that may flood out or spill from such places can be ignited by a random spark or hot surface on which it falls. Since pulverized fuel drifts freely in air, ignition may take place at a considerable distance from the point of initial disturbance.

All personnel shall eliminate potential ignition sources. Open flames and smoking are prohibited except in designated authorized areas. Use of welding and flame-cutting equipment are prohibited except in coal dust free areas when done in accordance with the LMSC C-12 Industrial Safety Manual or OSHA regulations.

Gun-type tools using powder or cartridges shall not be used where coal dust is present.

Non-sparking protective footware shall be worn.

Only non-sparking tools, such as brass tools, wooden shovels, etc., shall be used whenever coal dust is present.

If troubleshooting lighting is required, only extension cords with lamp guards and vaporproof globes shall be used.

3.5 COAL DUST STORAGE AND HANDLING

Vehicles and handling equipment shall comply with the NFPA requirements for Class II, Division 2 locations and the LMSC C-12 Industrial Safety Manual.

All coal dust will be in drum quantities, and stored in the allocated waterproofed area or building.

All spills and leaks must be vacuum suctioned to a closed, vented 55-gal drum. Residuals are to be flushed away with water.

The immediate supervisor of any persons handling coal dust must be warned of the breathing hazard and explosive characteristics of coal dust mixed with air.

In areas where the concentration of coal dust may go above the allowable limit, all personnel must wear approved, self-contained or supplied air-breathing equipment.

Good general ventilation must be maintained in the coal-feeder main building.

3.6 COAL DUST DISPOSAL

Used or discarded coal dust is to be placed in 55-gal steel open-ended drums, sealed and tagged for disposal. Proper procedure for removal or coal-dust-laden drums must be followed.

3.7 EYE AND EAR PROTECTION

Safety glasses must be worn in the main building at times when equipment is being checked or during tests.

The eye wash faucet must be checked daily and kept clear for access.

Ear plugs must be worn in the main building during long exposure to the running machinery; i.e., whenever an 8 hr/day exposure to running equipment occurs.

3.8 OPERATIONS

The minimum number of personnel essential for facility operations will be allowed in and around the facility whenever operational tests are conducted.

Personnel are not allowed in the KE area when (a) the rotor is operated above 2,500 rpm, or (b) the receiver is pressurized in excess of 350 psig.

During critical operations, an operator will be stationed in the diesel engine area and be in direct communication with the control room operator.

3.9 COMMERCIAL INSTALLATION

The LMSC KE type equipment will be used in conjunction with other apparatus or systems when it is placed into industrial use or tested in larger scope technology demonstration programs. Accordingly, the user who integrates LMSC equipment into larger systems is responsible for preparing written operating instructions and checklists to coordinate the operation of the KE with associated apparatus.

☆U.S. GOVERNMENT PRINTING OFFICE:1984 -746 -081/ 2586 REGION NO. 4