ANL-5768
Reactors-General

ARGONNE NATIONAL LABORATORY
P. O. Box 299
Lemont, Illinois

DESIGN AND PERFORMANCE CHARACTERISTICS OF MAGNETIC JACK-TYPE CONTROL ROD DRIVE

by

Joseph N. Young

Reactor Engineering Division

December, 1957

Operated by The University of Chicago
under
Contract W-31-109-eng-38

DISCLAIMER

This report was prepared as an account of work sponsored by an agency of the United States Government. Neither the United States Government nor any agency Thereof, nor any of their employees, makes any warranty, express or implied, or assumes any legal liability or responsibility for the accuracy, completeness, or usefulness of any information, apparatus, product, or process disclosed, or represents that its use would not infringe privately owned rights. Reference herein to any specific commercial product, process, or service by trade name, trademark, manufacturer, or otherwise does not necessarily constitute or imply its endorsement, recommendation, or favoring by the United States Government or any agency thereof. The views and opinions of authors expressed herein do not necessarily state or reflect those of the United States Government or any agency thereof.

DISCLAIMER

Portions of this document may be illegible in electronic image products. Images are produced from the best available original document.

TABLE OF CONTENTS

	Page
ABSTRACT	5
I. INTRODUCTION	5
II. FUNCTIONAL DESCRIPTION	6
III. COMPONENT DESCRIPTION	9
A. Drive Rods	9
B. Armature	14
C. Nonmagnetic Sleeve	14
D. Cushion Washers	15
E. Pressure Shell	15
F. Magnet Coils	16
IV. AUXILIARY EQUIPMENT	16
A. Control System	16
B. Position Indicator	21
C. Decelerator	25
D. Pressure Vessel Connection	25
V. PERFORMANCE AND EVALUATION	25
A. Performance	25
B. Discussion	27
VI. FABRICATION COSTS	31
APPENDICES	33
Appendix A: Manufacturing Drawings of Magnetic Jack Unit No. 24.	33
Appendix B: Manufacturing Drawings of Magnetic Jack Unit No. 27.	49
Appendix C: Magnetic Circuit Calculations	67
Appendix D: Comments on Other Types of Electromagnetic Rod Drives and Position Indicators	79

LIST OF FIGURES

No.	Title	Page
1	Magnetic Jack Control Rod Drive Unit No. 20	7
2	Coil Cycle to Effect Rod Motion	8
3	Magnetic Jack Control Rod Drive Unit No. 18B	10
4	Magnetic Jack Control Rod Drive Unit No. 21E	11
5	Magnetic Jack Control Rod Drive Unit No. 24	12
6	Magnetic Jack Control Rod Drive Unit No. 27	13
7	Control, Selector, and Power Supply Circuit Diagrams	18
8	Control System Mechanical Components	20
9	Position Indicator Circuit Diagram	22
10	Position Indicator	23
11	Voltage Regulator Circuit Diagram	24
12	Magnetic Jack Capacity	27
13	Typical Scram Time for Magnetic Jack Control Rod Drive Mechanism	29
14	Position Indicator Error	30
15	Position Indicator Error Due to Increase in Temperature of Coils and Rods	30
16	Magnetization Curves	70

LIST OF TABLES

No.	Title	Page
I	Control System Electrical Components	19
II	Performance Characteristics of Units No. 18B, No. 20 and No. 21 E.	26
III	Fabrication Costs	31
IV	Manufacturing Drawings of Magnetic Jack Unit No. 24	34
V	Manufacturing Drawings of Magnetic Jack Unit No. 27	49

DESIGN AND PERFORMANCE CHARACTERISTICS OF MAGNETIC JACK-TYPE CONTROL ROD DRIVE

by
Joseph N. Young

ABSTRACT

The magnetic jack is a hermetically sealed, step-motion linear motor which satisfies the need for a reliable, low-cost, nuclear reactor control rod drive. It is especially applicable for operation under adverse conditions peculiar to pressurized water-cooled reactors.

The jack consists of a pressure shell, four sets of external magnet coils, and one internal moving part which imparts linear motion to rod extensions of the control rod. The desired motion is achieved by energizing and de-energizing the various coils in a given sequence. An electromagnetic position indicator registers the position of the drive rods, thereby locating the position of the control rod in the reactor core.

Two magnetic jacks were operated under simulated boiling water reactor operating conditions for 3150 hours (18,300 ft total rod travel, 2210 scrams) and 1330 hours (7,700 ft total rod travel, 1000 scrams), respectively. There were no mechanical malfunctions and no significant wear was observed on the components. The position of the rod was indicated to an accuracy of 0.05 in.

Complementary information includes detailed formulae and work sheets for calculating magnetic circuits and component drawings for two alternate magnetic jack designs.

I. INTRODUCTION

The magnetic jack was developed to satisfy the need for a reliable, low-cost drive mechanism to impart controlled linear motion to a nuclear reactor control rod. It is especially suitable for pressurized water-cooled power reactors where it is desirable to have a hermetically sealed system. A control rod drive that does not use a linear shaft seal usually requires a drive mechanism that operates in the reactor coolant. Any mechanism, simple or intricate, designed for sustained operation in water poses many

problems related to wear and corrosion. The magnetic jack circumvents these problems because there is virtually no mechanism and a minimum of essential moving parts.

A control rod drive must perform the following functions precisely and without malfunction over a long period of time, with or without lubrication:

(1) move the rod in either direction at a controlled rate of travel;
(2) hold the rod stationary;
(3) indicate the position of the rod;
(4) release the rod quickly under any condition.

In addition, the mechanism must operate in a small space with little cooling, and be economical to build and maintain.

Performance tests show that the magnetic jack meets these requirements.

II. FUNCTIONAL DESCRIPTION

The magnetic jack (Fig. 1) consists of a pressure shell, four sets of external stationary magnet coils (hold, grip, lift, pull down) and one internal moving part (armature) that imparts linear motion to a cluster of six drive rods. The drive rods are centered loosely within the armature and connected at one end to an extension of the control rod. The drive rods are of magnetic (nonpermanent) stainless steel and able to expand radially.

The drive rods and, hence, the control rod are moved upward in precise steps by a cam-operated selector switch which energizes and de-energizes the four sets of coils in a given sequence (Fig. 2). When energized, the hold coils pull the rods out radially and hold them to the pressure shell by magnetic attraction and friction. The grip coils attract the rods to the wall of the armature so that the rods move if the armature moves. A nonmagnetic sleeve prevents magnetic attraction of the armature to the pressure shell. The lift coil lifts the armature one step per coil cycle. The length of the step is governed by the axial clearance (magnetic flux gap) between the armature and the ends of the chamber. The practical range of step length is 0.02 - 0.20 in. The hold coils are energized to hold the drive rods at the desired control rod position.

The armature and the lift coil constitute a short-stroke solenoid which, owing to the short magnetic flux gap, exerts a much stronger pull than a conventional long-stroke solenoid for the same amount of power. For a coefficient of friction of 0.15, the combined holding force of the eight hold coils equals the lifting force of the lift coil.

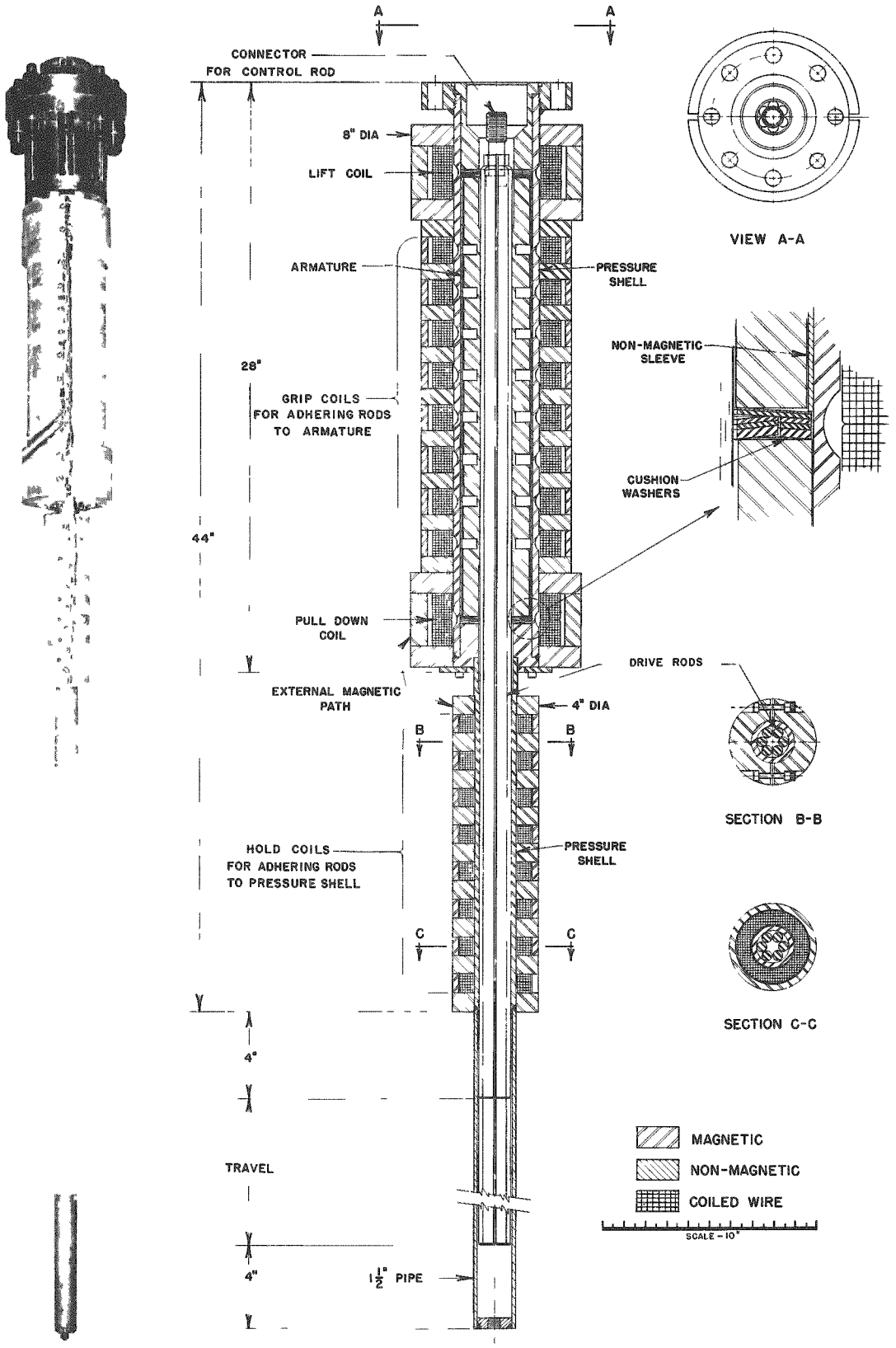

FIG. 1
MAGNETIC JACK CONTROL ROD DRIVE
UNIT NO. 20

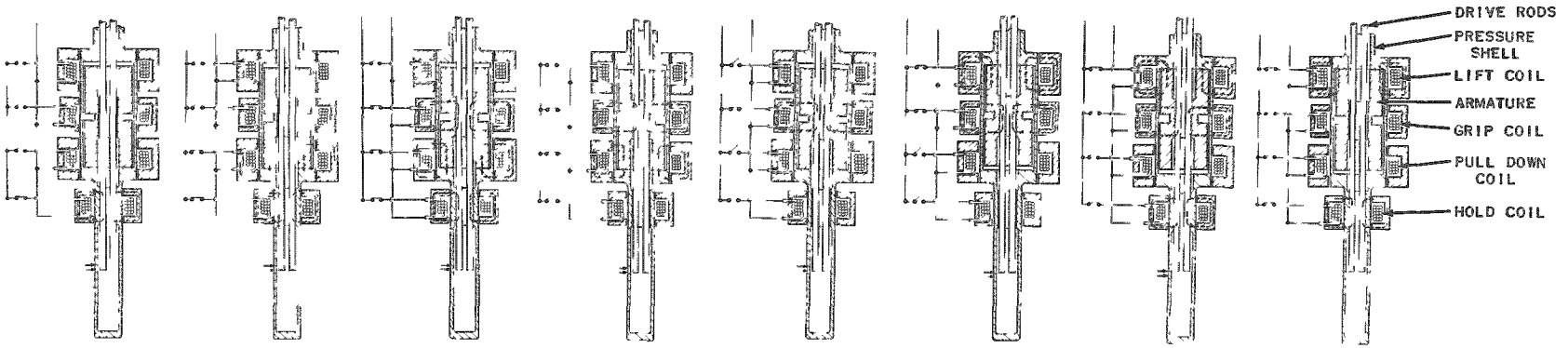

(1) (2) (3) (4) (5) (6) (7) (8)

TO RAISE THE ROD:

(1) THE JACK IS IN THE HOLD STAGE; THE HOLD COILS ONLY ARE ENERGIZED.
(2) THE PULL-DOWN COIL IS ENERGIZED TO ENSURE THAT THE ARMATURE IS DOWN.
(3) THE GRIP COILS ARE ENERGIZED TO ATTRACT THE DRIVE RODS TO THE ARMATURE.
(4) THE HOLD COILS ARE DE-ENERGIZED.
(5) THE PULL-DOWN COIL IS DE-ENERGIZED, LEAVING THE DRIVE RODS IN CONTACT WITH THE ARMATURE BUT FREE IN THE JACK.
(6) THE LIFT COIL IS ENERGIZED TO LIFT THE ARMATURE, THUS MOVING THE RODS UP ONE STEP.
(7) THE HOLD COILS ARE ENERGIZED TO HOLD THE RODS STATIONARY.
(8) THE GRIP COILS ARE DE-ENERGIZED.
(1) THE LIFT COIL IS DE-ENERGIZED TO COMPLETE THE CYCLE.

TO LOWER THE ROD:

(1) THE JACK IS IN THE HOLD STAGE.
(8) THE LIFT COIL IS ENERGIZED TO LIFT THE ARMATURE WITHOUT THE DRIVE RODS.
(7) THE GRIP COILS ARE ENERGIZED TO ATTRACT THE DRIVE RODS TO THE ARMATURE.
(6) THE HOLD COILS ARE DE-ENERGIZED.
(5) THE LIFT COIL IS DE-ENERGIZED TO ALLOW THE ARMATURE, WITH THE DRIVE RODS, TO DROP ONE STEP.
(4) THE PULL-DOWN COIL IS ENERGIZED TO PULL THE ARMATURE IN THE EVENT IT DID NOT DROP BY GRAVITY.
(3) THE HOLD COILS ARE ENERGIZED TO HOLD THE ROD STATIONARY.
(2) THE GRIP COILS ARE DE-ENERGIZED.
(1) THE PULL-DOWN COIL IS DE-ENERGIZED TO COMPLETE THE CYCLE.

FIG. 2
COIL CYCLE TO EFFECT ROD MOTION

Normal downward motion of the rods is accomplished by reversing the sequence and employing the pull-down coil. Rapid release (scram) of the rods is effected by de-energizing all of the coils.

Five magnetic jack units have been designed. Three units, No. 18B, No. 20, No. 21E (see Figs. 3, 1, and 4 respectively), have been built and tested. Manufacturing drawings for Units No. 24 and No. 27 (see Figs. 5 and 6) are included as Appendix A and Appendix B, respectively. Unit No. 27 was designed for applications that require the drive to be as short as possible.

Although Units No. 18B and 20 are shown in the below-the-reactor position, and Units No. 21E, 24, and 27 in the above-the-reactor position, all units may be installed in any position.

III. COMPONENT DESCRIPTION

A. Drive Rods

The drive rod material should be wear and corrosion resistant and have magnetic properties approaching those of mild steel. Although the strength requirements are low, the material should not be brittle. The rods must be sufficiently rigid that they will not buckle under compression loads, yet flexible enough to be free of one coil while being held tightly in another coil. The rods may be chrome plated to reduce wear and to reduce the effect of residual magnetism.

The drive rod of Unit No. 18B consists of four quarter-round rods. The total diametral clearance is 1/16 in. The material is AISI Type 416 stainless steel, which has good magnetic properties, fair corrosion resistance, and is readily available. Two of the rods were Neochrome plated (0.003 in. thick), with a natural surface finish. The third rod was Electro-coat chrome plated (0.0005 in. thick), with a polished surface finish. The fourth rod was Electrolized chrome plated (0.0005 in. thick), with a natural surface finish. The polished rod had the same coefficient of friction as the rods with the rougher, natural surface finish.

Unit No. 20 features six round rods of Type 416 stainless steel. The total diametral clearance is 1/32 in.

Unit No. 21E utilizes six round rods of Armco 17-4 PH stainless steel and one center round rod of Type 304 stainless steel. The total diametral clearance is 1/16 in. For large clearances, a center, nonmagnetic rod is employed to ensure radial orientation and magnetic attraction of the rods. Armco 17-4 PH has fair magnetic properties and good wear and corrosion resistance.

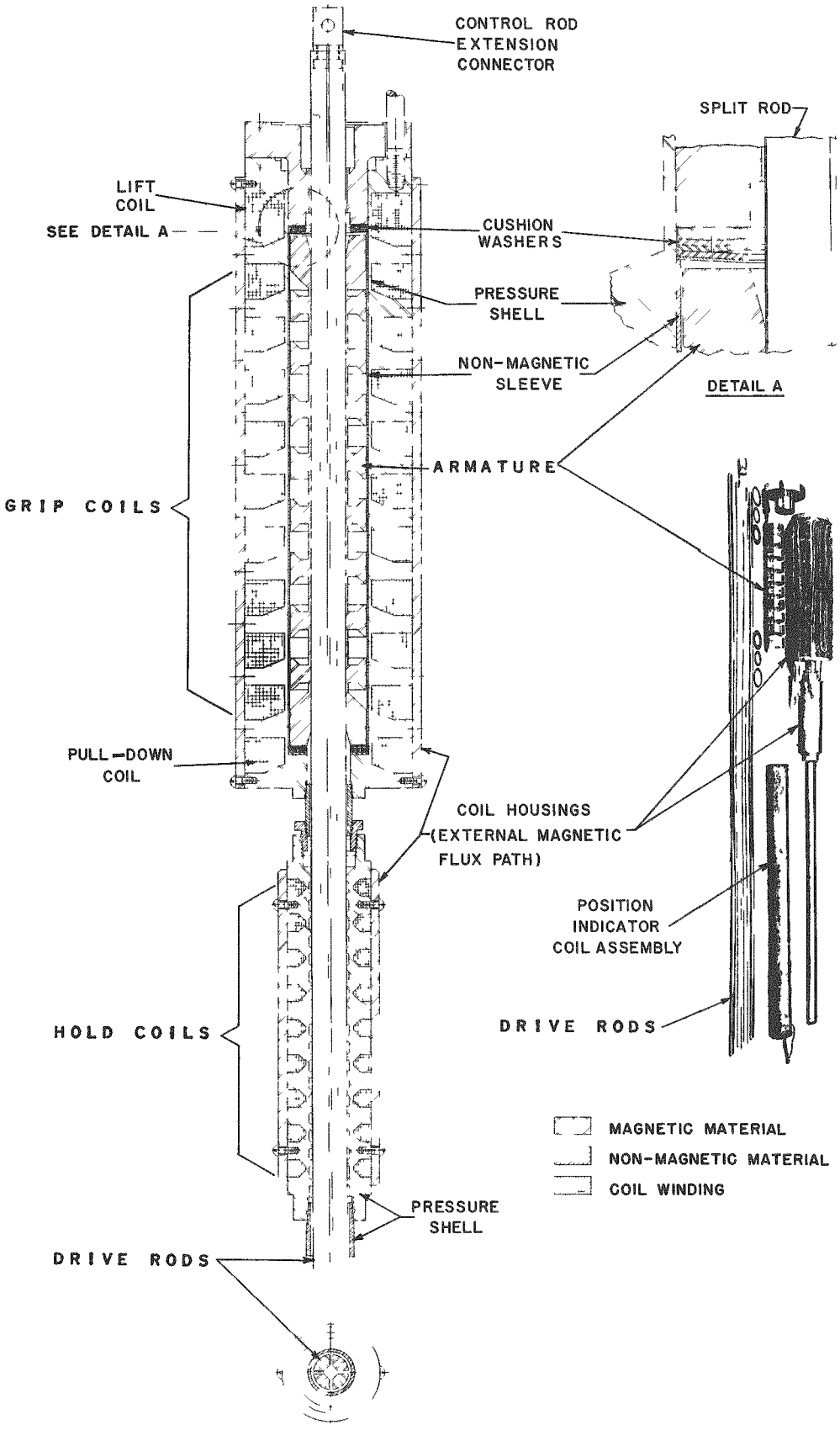

FIG. 3
MAGNETIC JACK CONTROL ROD DRIVE
UNIT NO. 18B

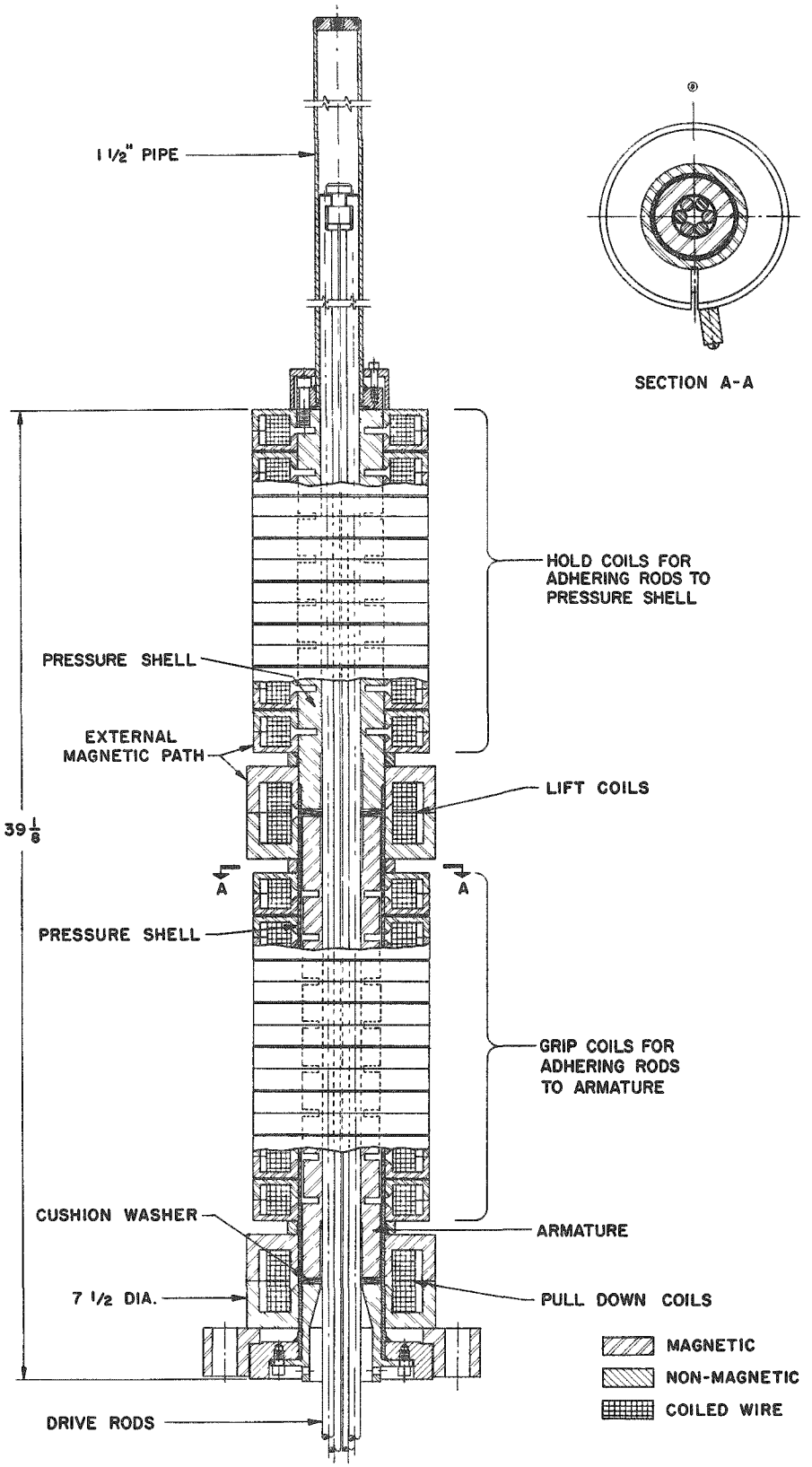

FIG. 4
MAGNETIC JACK CONTROL ROD DRIVE UNIT NO. 21E

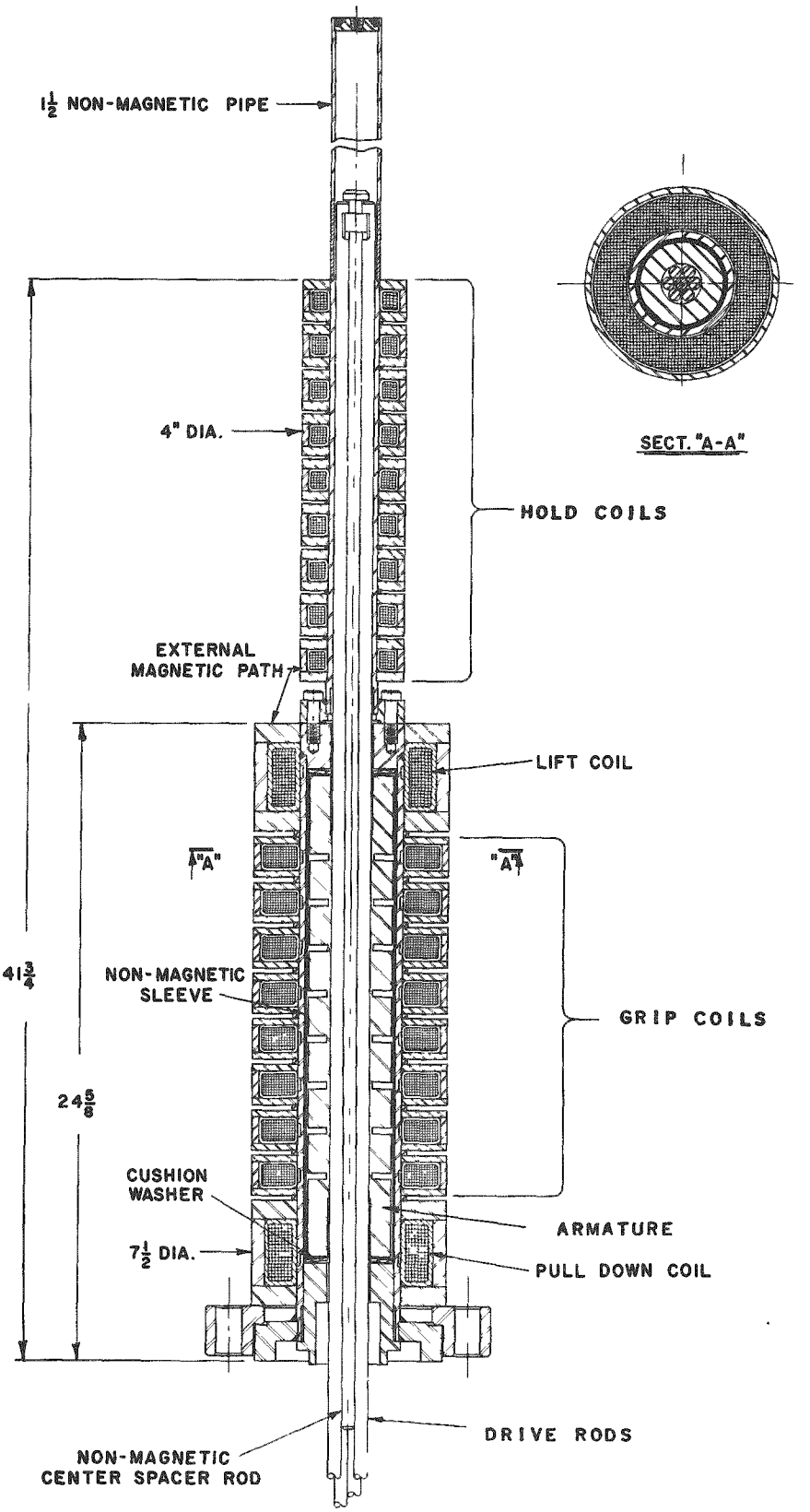

FIG. 5
MAGNETIC JACK CONTROL ROD DRIVE UNIT NO. 24

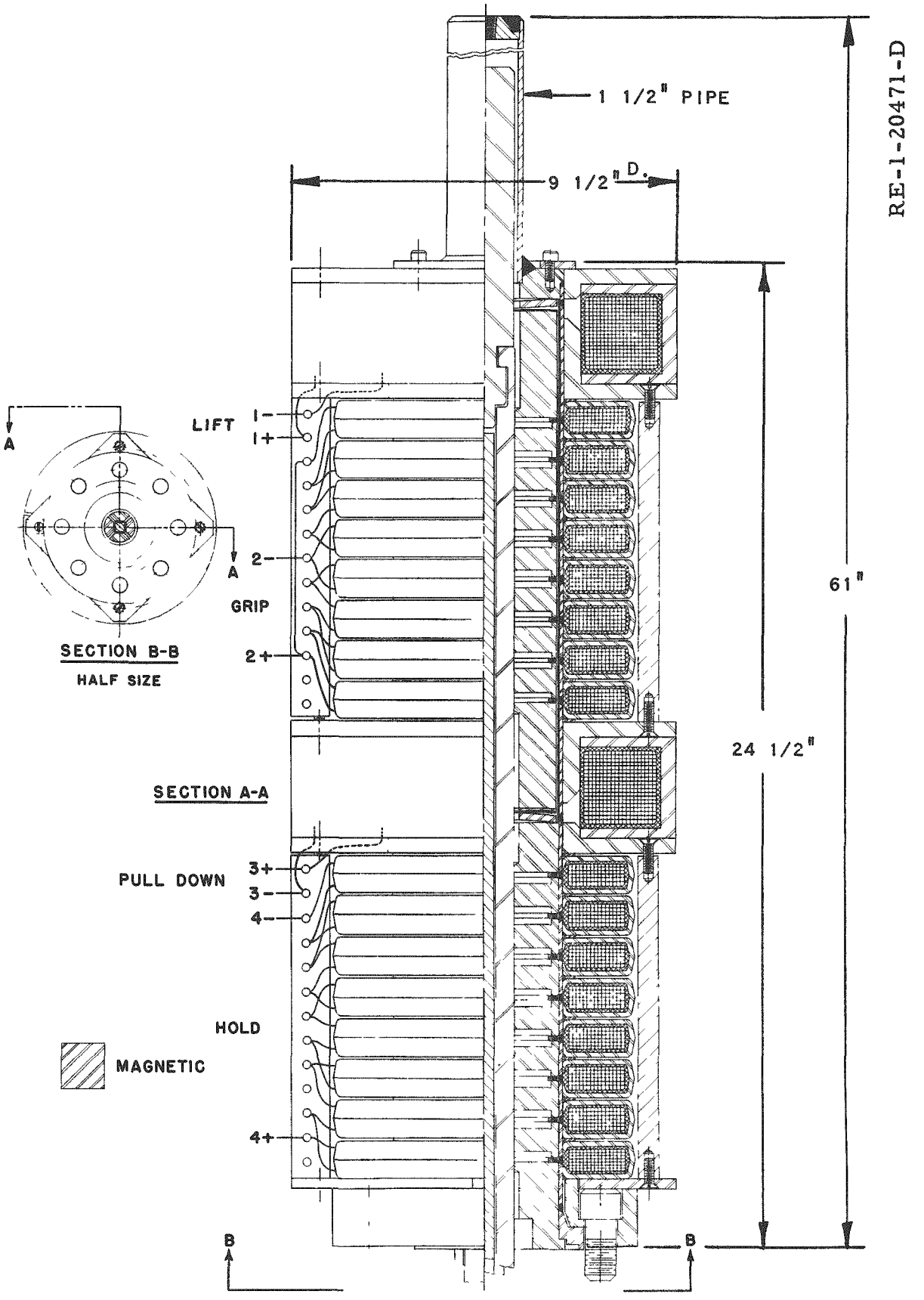

FIG. 6
MAGNETIC JACK CONTROL ROD DRIVE UNIT NO. 27

B. Armature

The armature is a tube with annular grooves which line up with the grip coils. Each coil creates a magnetic field around the coil and the groove and passes through the drive rods. The sections of tube between the grooves are proportioned so that the area of the magnetic flux path between the tube and the rod is slightly less than the cross-sectional area of the rod. This gives the maximum gripping force. The outer surface area of the tube is made as large as possible to reduce the power required to force the magnetic flux across the radial gap and also to reduce the radial forces. For the same reasons the ends of the armature are extended to take care of the lift and pull-down coil fluxes. These extended ends have a slightly larger bore which gives the rods more unrestrained length with which to flex. To reduce the short circuiting of magnetic flux, the grooves are made as wide as possible without significantly reducing the outer circumferential area, and as deep as possible without weakening the armature. The use of a nonmagnetic connection between the sections of the tube reduces the loss of magnetic flux but complicates the construction. The material requirements are the same as for the drive rods.

Unit Number	Armature Material	Groove Width, in.		Metal Thickness at Bottom of Groove, in.
		At Bottom	At Top	
18B	416 SST	1-1/2	7/8	3/32
20	416 SST	1/2	1/2	7/64
21E	430 SST	1/4	1/4	3/32

C. Nonmagnetic Sleeve

The nonmagnetic sleeve prevents magnetic attraction of the armature to the pressure shell. If the eccentricity (due to clearance of the armature in the sleeve) is less than the minimum magnetic gap (thickness of the sleeve), the side thrust due to the unbalanced magnetic flux is not excessive. Thus, a large clearance and a thick sleeve is desirable from a mechanical standpoint, but undesirable from the standpoint of electrical power consumption. The sleeves are made of Type 304 stainless steel.

Unit Number	Sleeve Thickness or Gap, in.	Radial Clearance or Eccentricity, in.	Type of Sleeve
18B	0.037	0.025	Split Tube
20	0.050	0.025	Split Tube
21E	0.031	0.012	Integral with Pressure Shell

Unit No. 21E was originally built with a nonmagnetic pressure shell. This gave a radial gap of 0.09 in., which proved inefficient for gripping. Mild steel sections were then welded into the pressure shell, and the inside was Neo-chrome plated (0.003 in. thick). The sections of shell near the ends of the armature are nonmagnetic. The armature is kept from touching the magnetic sections of the shell by having the diameter of armature larger near the ends.

D. Cushion Washers

Cushion washers are located at each end of the armature to reduce the impact of the armature against the chamber. Excessive impact causes a slight slippage of the rods in the armature, as well as too much noise.

The washers have a flat thickness of 3/16 in. and a free height that stresses the material to its yield point when the washer is flattened. The free height is established by over-forming the washer in a 10-degree die and then pressing it with a flat die. The cushion washers are fabricated from unhardened, magnetic stainless steel. A thin, nonmagnetic stainless steel washer is placed between the cushion washers and the armature to prevent residual magnetism from tending to hold the armature at either end.

The cushions of Units No. 18B and No. 20 consist of an inner and outer set of Belleville washers which trap a small amount of water between them, thus producing a hydraulic cushioning effect as the washers are compressed and the water is squeezed out.

Unit No. 21E features a single, stiff Belleville washer which cushions mostly by spring action.

E. Pressure Shell

The pressure shell is magnetic except for the region beyond the hold coils, which is nonmagnetic (Type 304), so that a magnetic position indicator may be used.

Two methods are employed to reduce axial short circuiting of the magnetic flux in the pressure shell. Circumferential grooves are machined on the outer surface of Units No. 18B and 20. For this type of shell, an increase in wall thickness to accommodate higher pressures would merely require a thicker external iron flux path. Nonmagnetic welds (Inconel) are used to separate the magnetic sections on Unit No. 21E. In this case the thickness of the external magnetic flux path need not be increased.

Unit No.	Magnetic Section Material	Design Pressure, psig	Design Temperature, F
18B	Armcc Iron, cadmium plated	-	-
20	Mild Steel, Kanigen nickel plated	920	250
21E	Mild Steel, Neo-Chrome plated	415	475

F. Magnet Coils

The hold and grip coils are wired so that adjacent coils produce magnetic fields in opposite directions. The lift and pull-down coils are wired to produce fields in the same direction as the adjacent grip coil.

Unit No.	Coil Description	Temp. Rating, C	Coil Function	Magnet Wire Size	Total Turns	No. of Coils	Ohms per Coil at 25C	Operating Current, Amp
18B	Integral with Pressure Shell	105	Lift	16	1050	1	6.0	7.7
			Grip	16	5160	9	3.2	2.5
			Hold	20	1800	9	1.5	2.0
20	Removable; Water-proof	130	Lift	18	960	2	4.1	4.8
			Grip	18	3840	8	4.1	3.3
			Hold	18	1280	8	0.72	4.4
21E	Removable; Water-proof; High-Temp.; Interchangeable	180	Lift	18	960	2	4.2	4.4
			Grip	18	3840	8	4.2	2.7
			Hold	18	3840	8	4.2	2.0

IV. AUXILIARY EQUIPMENT

A. Control System

The control system is designed to move one control rod at a time, irrespective of the number of magnetic jacks employed. The following description pertains to a system designed and constructed to operate a battery of five magnetic jack drives. It has been connected to Units No. 20 and 21E (which are on hand) and operates very well.

The system is divided into three units: (1) the control unit contains all the switches; (2) the selector unit contains the relays, which switch the control to the magnetic jack selected, and the rectifiers, which supply holding power to the inoperative magnetic jacks; and (3) the power supply contains the relays and rectifiers which supply power to the unit being operated by the control unit.

(1) The control unit is separate from the rest of the system so that little panel space is taken up by the magnetic jack control rod drive. The unit is comprised of two on-off switches with respective pilot lights, a selector switch, and a control knob.

One of the on-off switches turns off the power to the entire control system, thereby scramming all of the rods. The second on-off switch de-energizes the control unit, thus scramming the rod selected by the selector switch. The control knob causes the control rod to move stepwise in response to the direction in which the knob is held by the operator. When the knob is released, the rod completes the last step and stops.

With reference to the circuit diagram (Fig. 7(A)) microswitches A5 and A6 are actuated by the control knob. The other microswitches are actuated by a cam driven by the reversible motor M. The cam depresses the switches for 5/8 of the cycle and releases the switches for 3/8 of the cycle. Relays H5 and H6 ensure motor rotation in the desired direction. Microswitches A51, A52, and A53 operate the motor in one direction until a step has been completed and the hold coils only are energized. Similarly, microswitches A61, A62, and A63 operate the motor in the other direction. Microswitches A1 and A3 operate the lift and pull-down coil relays, respectively. Microswitch A2 is for gripping, and A4 is for holding. The lever on the control knob shaft which actuates microswitches A5 and A6 also provides a mechanical stop for the cam in case the motor fails to stop when the control knob is in its neutral position.

(2) The selector unit is separate so that it may be easily omitted if it is required that each rod drive be operated by its own control system.

With reference to the circuit diagram (Fig. 7 (B)), relays B switch the hold coils from rectifiers S54, S64, and S74 to the rectifiers of the control power supply. Relays that are reasonably fast-acting accomplish the transfer without allowing the rod to move. Relays J are actuated by the selector switch (see P on Fig. 7(A)). They switch the control to the move and grip coils of the selected magnetic jack.

(3) The power supply unit (Fig. 7 (C)) has the rectifiers S switched at the a-c side to prevent excessive arcing in relays R when the coils are de-energized. This also reduces the voltage surge in the coils.

A detailed description of the control and power supply electrical components is given in Table I. The mechanical components are shown in Fig. 8.

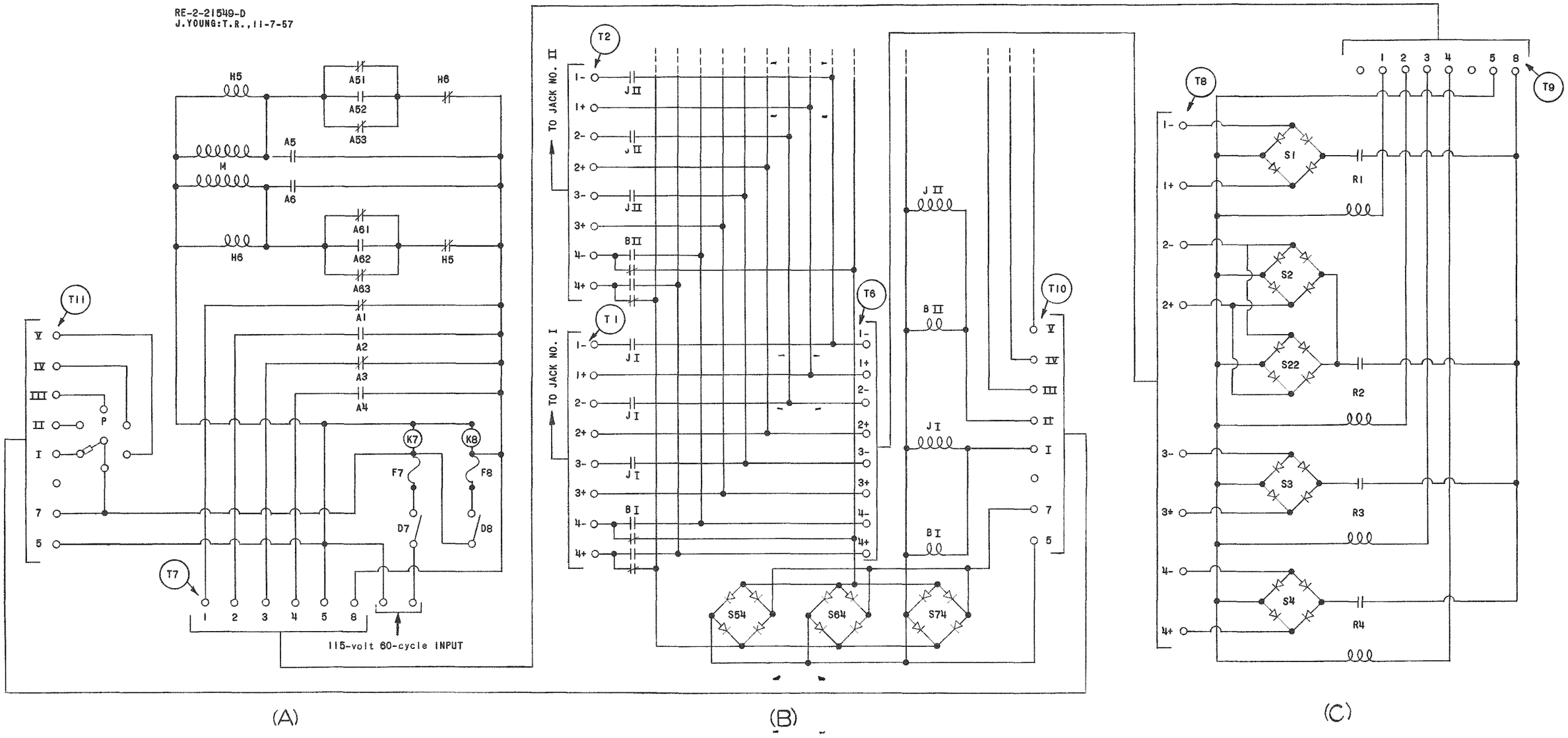

FIG. 7
(A) CONTROL; (B) SELECTOR AND (C) POWER SUPPLY CIRCUIT DIAGRAMS

Table I

CONTROL SYSTEM ELECTRICAL COMPONENTS

Part No.	No. Required			Description
	Control	Selector	Power Supply	
A	12			Microswitch; B-BL2
B		5		Relay; DPDT; 115-volt, 60-cycle coil; 15-ampere contact
D	2			On-Off Switch
F	2			Fuse; 30-ampere
H	2			Relay; SPDT; 115-volt, 60-cycle coil; 3-ampere contact
J		5		Relay; 3PST; 115-volt, 60-cycle coil; 15-ampere contact
K	2			Pilot Light; 115-volt
M	1			Gear Motor, Gleason-Avery 540BRA2; Tandem Reversible with brake; 40-rpm, 115-volt, 60-cycle, single phase, 1/4 in. dia. Shaft, Flange Mtg.
P	1			Selector Switch; off and 5 positions, 1 circuit
R			4	Mercury Plunger Relay, Adlake 1140-45-MM; SPST, N. O., 115-volt, 60-cycle coil.
S		3	5	Selenium Rectifier; S-T No. 7W265BIAS, 5-ampere, 100-volt d-c bridge
T	2	7	2	Terminal Strip; 8 Terminals

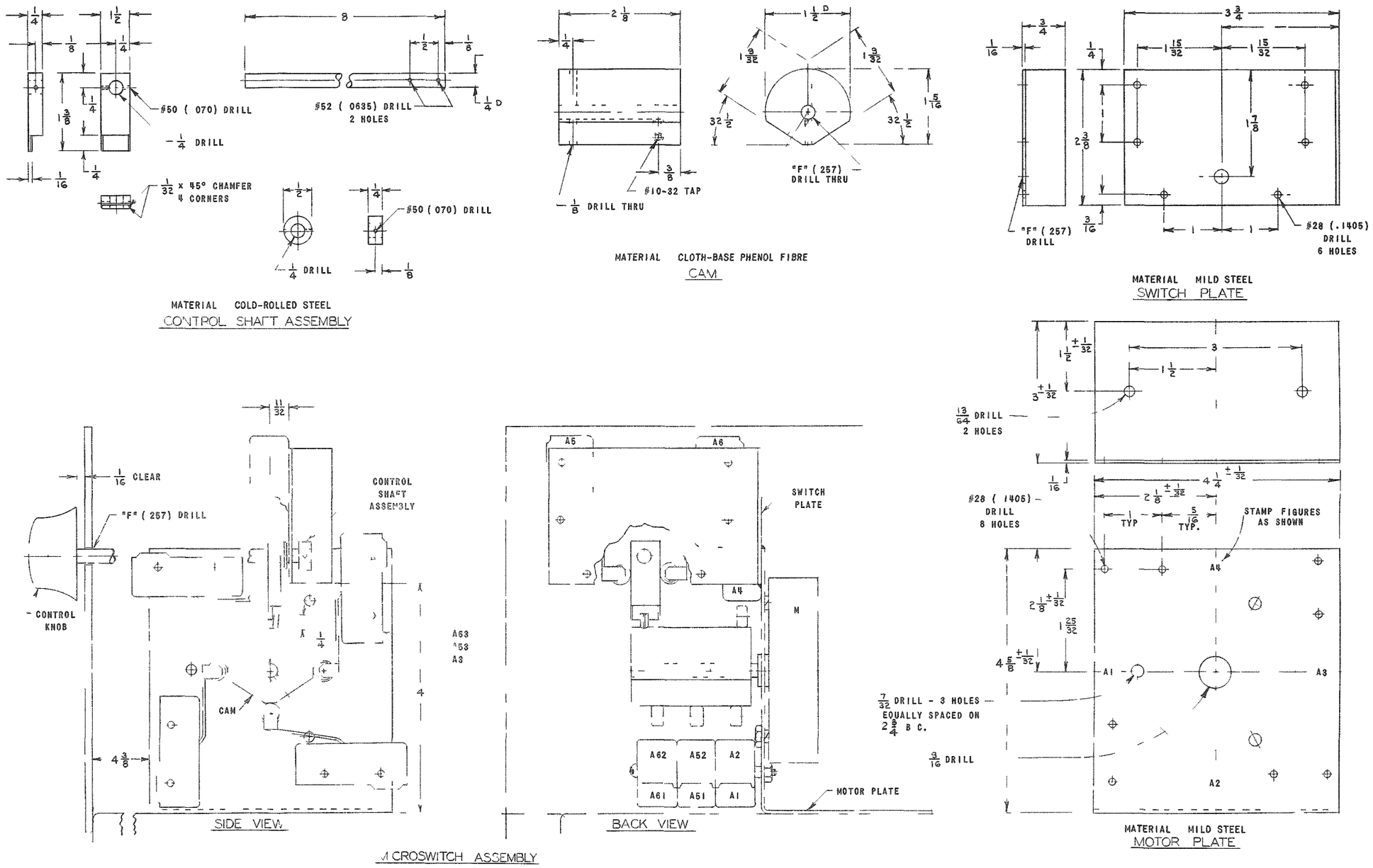

FIG 8
CONTROL SYSTEM MECHANICAL COMPONENTS

B. Position Indicator

Position indicators used with the magnetic jack are of the electromagnetic, stationary-coil type. Basically, they consist of a coil that fits over the nonmagnetic portion of the pressure shell. The drive rods, which are magnetic and long enough so that a part is always in the coil, increase the impedance of the coil as they move into it. Measuring the impedance gives the position of the rod.

Impedance-measuring devices, using a bridge circuit, offer the advantage of requiring a relatively small amount of wire on the coils and of using the full scale of the meter. The disadvantage is that they are sensitive to extraneous influences.

One position indicator has proved superior to the many types that have been tested. It simply consists of an a-c voltmeter across the coil and a 60-cycle, constant-current, power supply. Development of the system was delayed by the fact that the number of coil turns must be within a certain range for good results. For the indicator tested, this range was between 400 and 1000 turns.

The wiring diagram of the test model is shown in Fig. 9. It was tested on a magnetic jack with a cluster of six 1/2-in. diameter drive rods of Armco 17-4 PH stainless steel in a 1½-in. standard pipe of Type 304 stainless steel.

The approximate position of the rod is indicated by a series of light bulbs. The bulbs are at full brightness when the rods are fully in the coil, dimly lit with the rods partially inserted, and completely out when the rods are withdrawn. Precise indication is obtained by switching the meter to the coil in which the end of the rod is effective (see Fig. 10).

The current supply is held nearly constant by using a large resistor in series with the coils. The remaining variation in current, due to the change in position of the rod, is compensated by having a different amount of resistance in series with the meter for each selector switch position. To compensate for the smaller amount of impedance of the coils near the end of the series, the light bulb for the end coil is replaced by a resistor of higher resistance than the bulb.

A voltage regulator (Fig. 11) is used to supply the position indicator with the correct amount of power. The voltage is adjusted manually with a rheostat. One voltage regulator may be used to supply power to all of the position indicators. Ordinary constant voltage transformers give a voltage that has a varying effect on the position indicator (usually a 2% rise during the day).

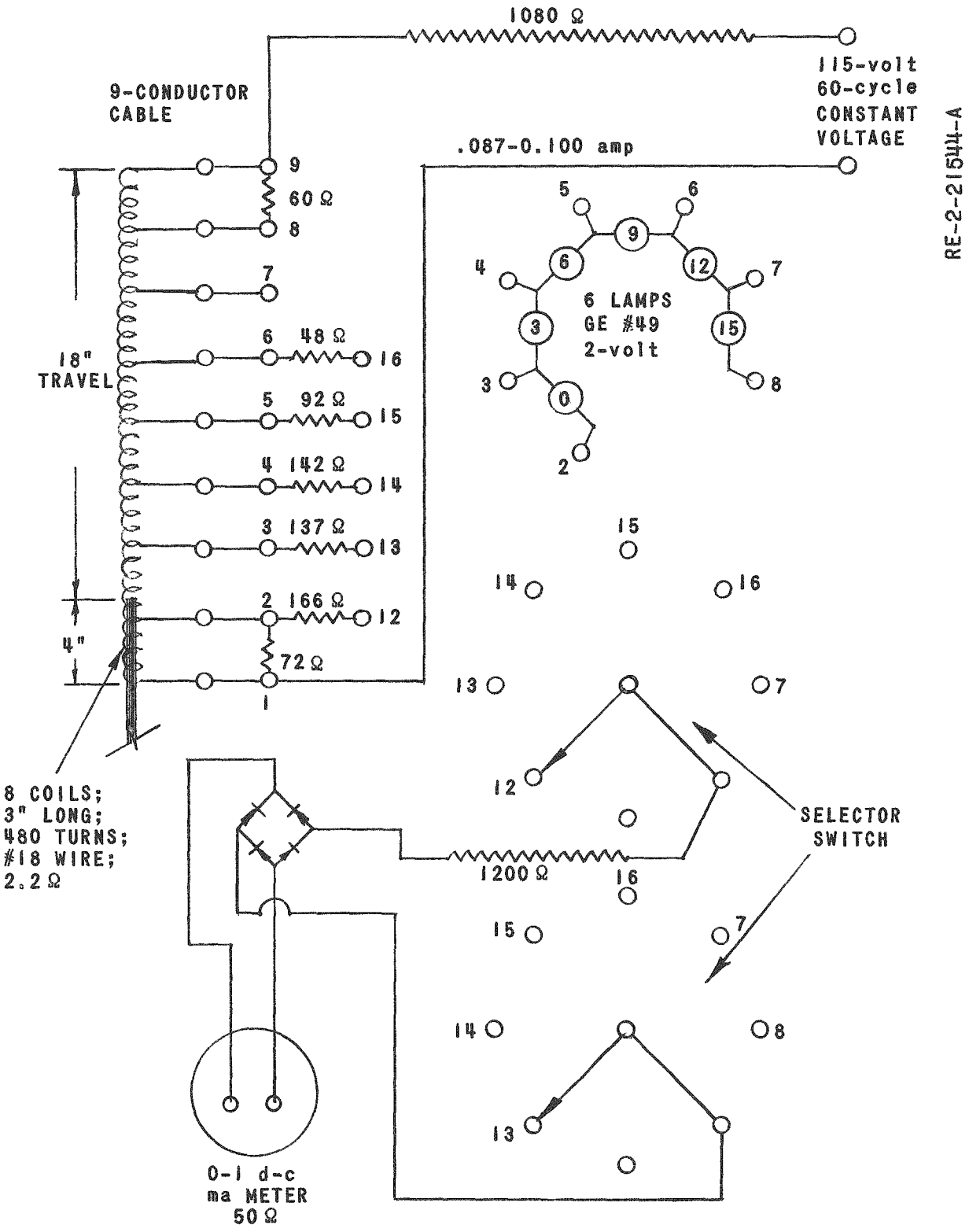

FIG. 9
POSITION INDICATOR CIRCUIT DIAGRAM

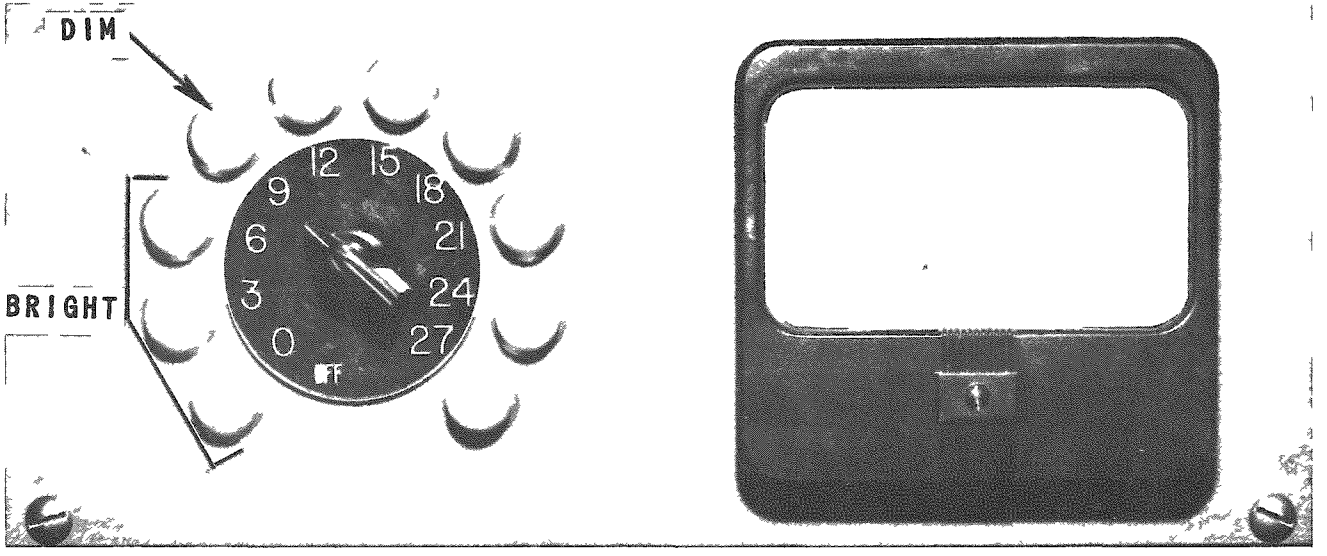

APPROXIMATE PRECISE

NOTE: METER READS 9 in. (APPROXIMATE) + 2-1/2 in. (PRECISE) = 11-1/2 in.

FIG. 10
POSITION INDICATOR

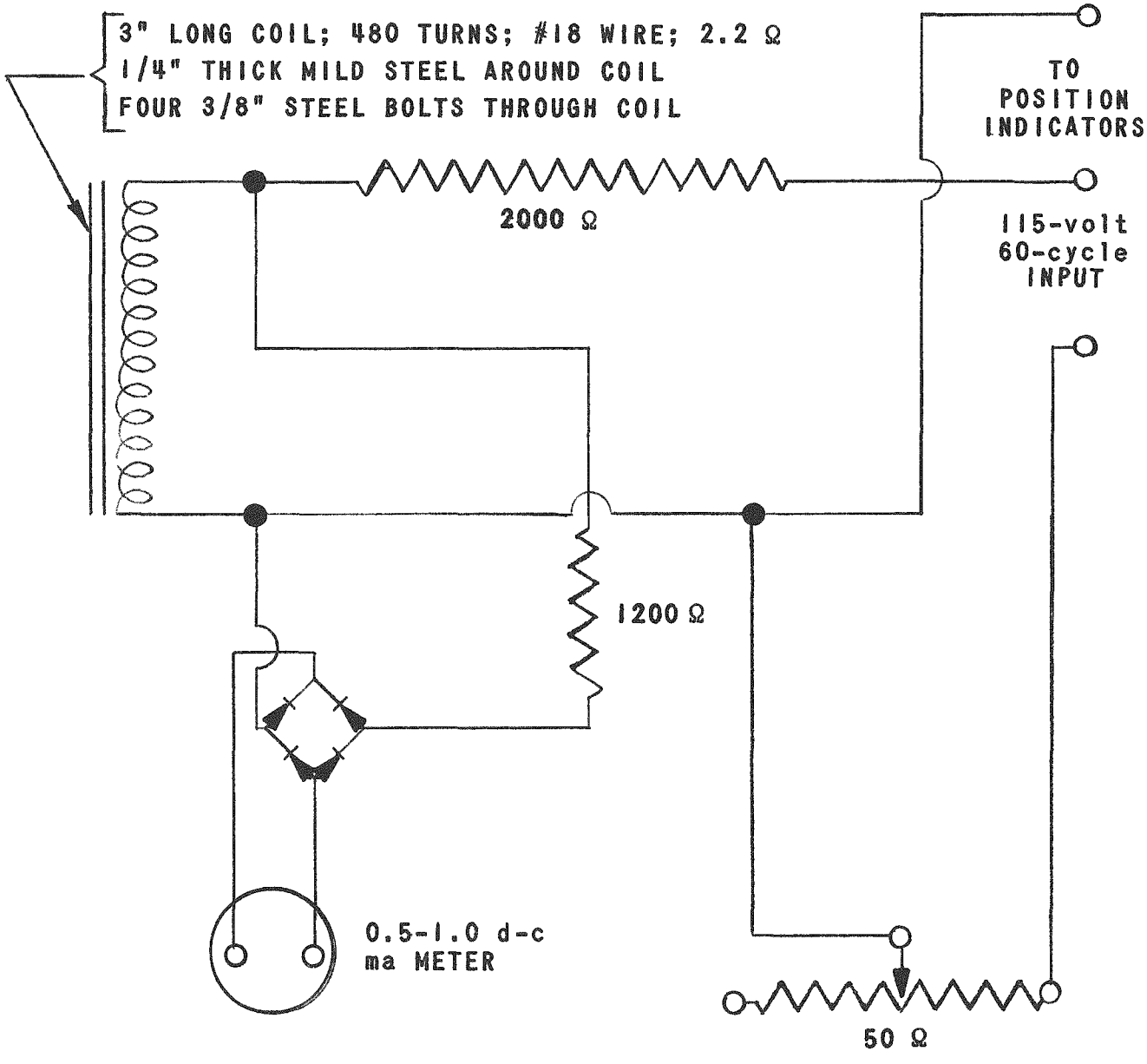

FIG. 11
VOLTAGE REGULATOR CIRCUIT DIAGRAM

C. Decelerator

A decelerator is used to slow down the control rod after a quick return stroke (scram). The dash pot-type consists of a piston fastened to the control rod assembly, and a stationary tapered cylinder. The taper provides a clearance which forms a diminishing orifice through which the displaced liquid is forced. A large piston clearance is used to preclude the possibility of the piston sticking in the dash pot cylinder. It is possible to have a large clearance without reducing the effectiveness of the dash pot provided the clearance is the only orifice and the diameter of the piston is large enough. The dash pot used during the test of Unit No. 20 was 3 in. long. The piston diameter is $3\frac{9}{16}$ in. The diametral clearances were 0.083 in. (initial) and 0.020 in. (final).

A dash pot cannot be used where the control rod might be operating without a liquid in the stopping device. In this case, a stack of Belleville washers can be used. In order to reduce the bounce of a dry, spring-type cushion, a shock-absorbing spring assembly may be used. A stack of leaf springs and flat plates would be satisfactory; there is rubbing friction, but no chance of sticking.

D. Pressure Vessel Connection

The magnetic jack is connected to the reactor pressure vessel by a thimble (pipe). One end of the thimble is welded to the pressure vessel; the other end is flanged to accommodate the flange of the magnetic jack pressure shell.

The length of the thimble will vary with the reactor shielding and insulating through which it extends. However, a thimble length of about one foot is sufficient to prevent excessive heat transfer by conduction from the hot pressure vessel to the magnetic jack.

In the case of a control rod drive located below the reactor vessel there is essentially no heat transfer by convection; therefore natural circulation cooling to the surrounding air is sufficient. For an above-the-reactor drive, auxiliary cooling usually is required. In addition, provision must be made for restricting circulation of the reactor coolant between the reactor and the drive mechanism.

V. PERFORMANCE AND EVALUATION

A. Performance

Unit No. 18B was operated in an open test facility. Units No. 20 and 21E were operated in a facility designed to simulate anticipated operating conditions for two proposed reactors. The test conditions and results are summarized in Table II.

Table II

PERFORMANCE CHARACTERISTICS OF UNITS
NO. 18B, NO. 20 AND NO. 21E

Unit No.	18B	20	21E	
Unit Installation	Open Rig	Below Vessel	Atop Vessel	
Pressure, psig	0	600	300	
Load, lb	313	220	150	
Fluid in Jack	Water	Water	Water	
Temperature, F				
Ambient	75	75	75	75
Top of Vessel		488	420	420
Thimble		80	350	300
Coil		260		
Cooling	-	Natural	100F water at 0.1 gpm in top	12-in. fan at flange
Total time at pressure, hr	-	3150	480	850
Total Travel, ft	8800	18300	2600	5100
Steps/minute	30	30	30	30
Step Length, in.				
Up	0.097	0.080	0.056	0.056
Down	0.100	0.082	0.059	0.059
Coil Power, watts				
Operating				
Move	335	670	575	575
Hold	50	160	190	190
Minimum				
Lift	161	240	195	200
Hold	12	17	16	18
Wear, in.				
Drive Rods	< 0.001	0.009	< 0.001	0.0012
Other parts	< 0.001	< 0.001	< 0.001	< 0.001
Malfunctions				
Mechanical	None	None	None	None
Electrical	2 Shorts	Lead Short	None	Lead broken

B. Discussion

1. Probability of Failure Where Servicing is Most Difficult

Since the internal mechanism is sealed and located near the reactor vessel, the most significant aspect of the test program is the absence of any mechanical malfunction. The sealed unit concept, coupled with the unique power and control system, also precludes lubrication, mechanical adjustments, shaft seals, or pressurized electrical connections which necessitate frequent inspections and/or maintenance.

The magnet coils may fail; however, they are readily accessible for maintenance or replacement.

The power supply is located at a distance from the reactor.

2. Fail Safe

Since all of the failures encountered were electrical in nature, they either caused the rod to drop or kept the rod from lifting, but never prevented the rod from dropping when the power was turned off. Should a control rod become stuck, it is possible to drive the rods down with a force equal to the lifting capacity.

3. Power Requirements

Figure 12 shows the minimum power required to lift, grip, and hold various loads. The recommended operating power is about three times the minimum values.

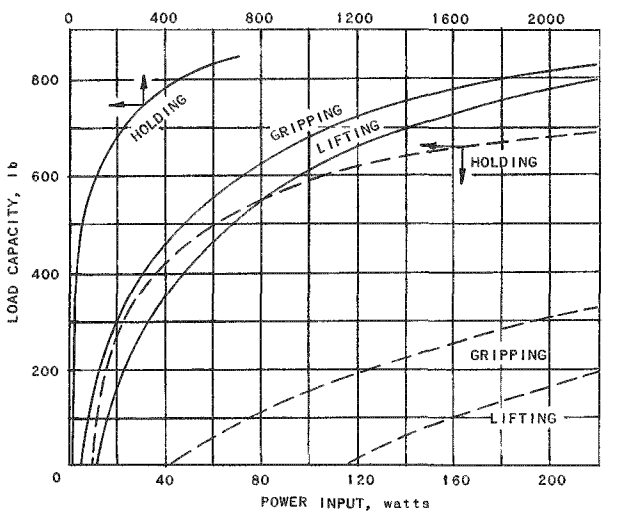

FIG. 12
MAGNETIC JACK CAPACITY

4. Lifting

The magnetic jack operates best at speeds of less than 45 steps/minute. Most of the testing was done at a speed of 2.4 in./min. The jacks described in this report have a maximum lifting capacity of about 800 lb and a rated capacity of 600 lb.

5. Slippage

When newly installed, the coefficient of friction was about 0.15, and the step length indicated a slippage of 10%. After several days of operation in water, the coefficient of friction increased by a factor of ~3, and the slippage decreased to 3%. The increase in friction is probably due to the removal of residual fabrication lubricant and/or the formation of iron oxide.

6. Holding

The jack will hold the rods immovable at any desired position as long as the grip and/or hold coils are energized. The rods may be released and then re-gripped while moving. With the mechanism surfaces free of lubricant and the hold and grip coils energized, the holding capacity of the jack designs described is about 1400 lb. Assuming a total load of 100 lb, the jack would resist a 14-G shock while holding, and a 6.5-G shock while moving the rods. Greater shock loads would cause the rods to slip a little.

7. Fast-Return Stroke (Scram)

The fast-return action of the multiple rod-type magnetic jack has never failed. The delay time depends upon the method of power cutoff and the amount of excess holding power. With twice the required holding force and the present coil cycle, the delay time is about 0.020 sec (see Fig. 13). The release characteristics are the same irrespective of the holding period.

Although the rods can be dropped rapidly, the maximum speed with which the rods can be power driven (in either direction) is limited to about 6 in./min. The rate may be increased by improvements in the timing of the coil-switching sequence.

8. Heat Generation

The heat generated by an operating magnetic jack approximates that of an enclosed electric motor.

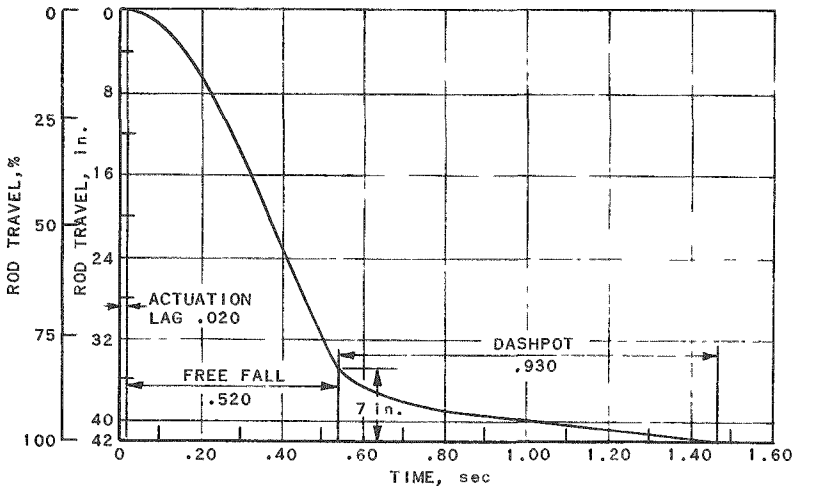

FIG. 13
TYPICAL SCRAM TIME FOR MAGNETIC JACK CONTROL ROD DRIVES

9. Wear

The measured wear ranged from 0.009 in. on the drive rods to negligible wear on all other components. Unclad drive rods are adequate; however, chrome-plated rods offer prolonged protection against both wear and corrosion.

The cushion washers were pitted but still serviceable.

The large clearances between moving parts permit wear particles or foreign particles to drop through or collect on non-contacting surfaces. This was substantiated by inspections made at the conclusion of each test. Although all exposed surfaces were covered by a black powder (probably oxidized wear particles), there was no appreciable buildup on contacting surfaces.

In view of the slight wear, it is reasonable to assume that the duration of the test program (5 months) represents a small fraction of the ultimate life of the magnetic jack.

10. Position Indication

The position indicator is accurate to within 0.05 in. over the full travel (see Fig. 14). The accuracy for showing small movements is limited only by the readability of the meter, which is about 0.01 in. The slight error of 0.001 in. per degree C (see Fig. 15) due to changes in temperature of the coils and the rod may be corrected by shifting the meter needle left 1% of full scale for each 50-degree increase in temperature. Radial movement of the rod has no effect on the indicator and there is no interference from the action of the magnetic jack.

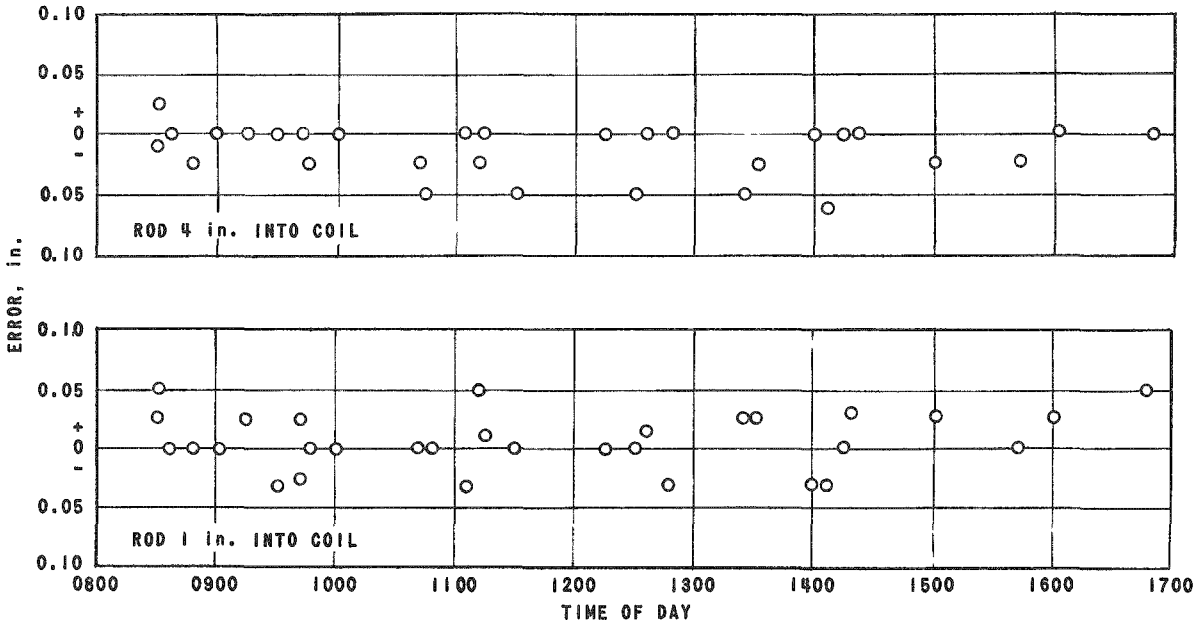

FIG. 14
POSITION INDICATOR ERROR

RE-7-21600-A

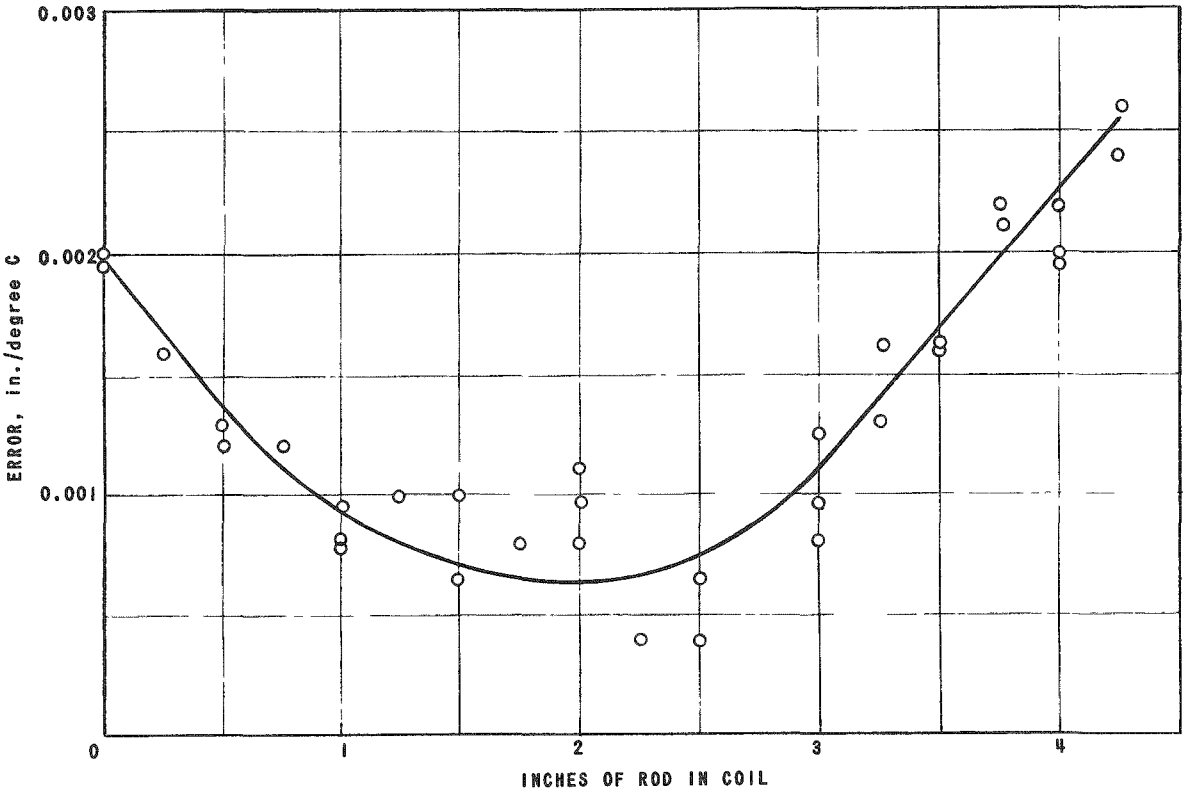

FIG. 15
POSITION INDICATOR ERROR DUE TO INCREASE
IN TEMPERATURE OF COILS AND RODS

RE-7-21601-A

VI. FABRICATION COSTS

The mechanical components can be fabricated from inexpensive materials by standard machine shop practice. The actual cost breakdown, including power supply, is given in Table III.

Table III

FABRICATION COSTS

	Actual Costs			Average of Two Lowest of Six Bid		
Jack No.	20	21E	27	24		
No. of Units	1	1	1	1	6	10
Mech. Parts	$2217.*	$2784.*	$2810.*	$2855.	$1630.	$4387.
Magnet Coils	208.	522.	1300.	1895.	1539.	1446.
Control Parts	250.	250.	250.	560.	418.	396.
Assembly (Est.)	220.	220.	220.	100.	100.	100.
Shipping	-	-	-	52.	52.	52.
TOTAL:	$2895.	$3776.	$4580.	$5462.	$3739.	$3381.

*Based on ANL Shop Cost @ $5.50/hr.

ACKNOWLEDGEMENT

The author gratefully acknowledges the assistance of G. G. Dewey during the construction and testing phases of the program.

APPENDIX A

MANUFACTURING DRAWINGS OF MAGNETIC JACK UNIT NO. 24*

Complete working drawings for the magnetic jack, the power supply, and assembling procedures are listed in Table IV. Because of space limitations, the drawings which appear on the referenced pages have been confined to a description of the magnetic jack components.

The drawings tabulated may be purchased individually or as a package. Access permit holders should submit requests for listed materials to the Technical Information Service Extension, P. O. Box 1001, Oak Ridge, Tennessee, utilizing Form AEC-435, "Order for Engineering Materials." Payment for items ordered may be remitted with the order or charged to an advance deposit account if such an account has been established with Technical Information Service Extension.

The public may order engineering materials from the Technical Information Service Extension, P. O. Box 1001, Oak Ridge, Tennessee, ATTN: Engineering Sales. Payments for materials should be remitted with each order.

All prices listed include postage. Checks or money orders should be made payable to the "U. S. Atomic Energy Commission "

---

*Patent No. 2,803,761

Table IV

MANUFACTURING DRAWINGS OF MAGNETIC JACK
UNIT NO. 24

Drawing No.	Description	AEC* No.	Price*	Reference Page
	CONTROL ROD DRIVE			
RE-1-18785	Bill of Material	1	$0.32	
18785-D	Assembly	2	1.24	35
18786-C	Large Pressure Shell	3	0.64	36
18787-C	Small Pressure Shell	4	0.64	37
18788-B	Armature	5	0.32	38
18789-B	Hold Coil	6	0.32	39
18790-B	Move Coil	7	0.32	40
18791-B	Grip Coil	8	0.32	41
18792-B	Flange Ring	9	0.32	42
18793-B	Plug	10	0.32	43
18794-B	Washer	11	0.32	44
18795-B	Drive Rod	12	0.32	44
18797-B	Sleeve	13	0.32	45
18798-B	Coil Spacer	14	0.32	45
18799-A	Filler Rod	15	0.16	45
18871-B	Small Coil Clamp	16	0.32	46
18872-B	Large Coil Clamp	17	0.32	46
18873-B	Terminal Strip	18	0.32	46
19157-A	Shim	19	0.16	47
17894-A	Connector	24	0.16	47
18992	Bill of Materials	20	0.32	
18992	Assembly	21	2.48	
17892	Liner - Outer	22	0.32	
17893	Liner - Inner	23	0.32	
17895	Connecting Rod	25	0.16	
17897	Belleville Spring	26	0.16	
18796	Check Valve	27	0.32	
18800	Pipe Nipple	28	0.16	
18893	Position Indicator Coil	29	0.32	
	POWER SUPPLY			
RE-1-19093	Cam - Micro Switch	30	$0.32	
RE-1-19096	Plate - Motor	31	0.32	
RE-6-19125	Panel	32	0.16	
RE-1-19126	Diagram	33	0.16	
RE-6-19127	Parts List	34	0.16	
RE-7-17955	Coil Switching Sequence	35	0.16	
	TEST ASSEMBLY PROCEDURE			
RE-6-19155	Internal Parts	36	$0.16	
RE-6-19158	External Parts	37	0.16	

Charge for package: $14.16

*Prices published in "Unclassified Engineering Materials," CAPE-34, July, 1957

PART NO.	DESCRIPTION	MAT'L.	NO. REQ'D
1	SOCKET HEAD SCREW 1/4"-20 x 5/8" LG.	STEEL	4
2	FLAT HEAD SCREW 1/4"-20 x 3/4" LG.	STEEL	12
3	SOCKET HEAD SCREW 3/4"-10 x 1 1/2" LG.	STEEL	8
4	FLAT HEAD SCREW 1/4"-20 x 1 1/4" LG.	STEEL	4
5	LOCK WASHER #10	STEEL	52
6	FLAT WASHER #10	BRASS	60
7	HEX. NUT #10-32	BRASS	52
8	ROUND HEAD SCREW #10-32 x 1 1/2" LG.	STEEL	22

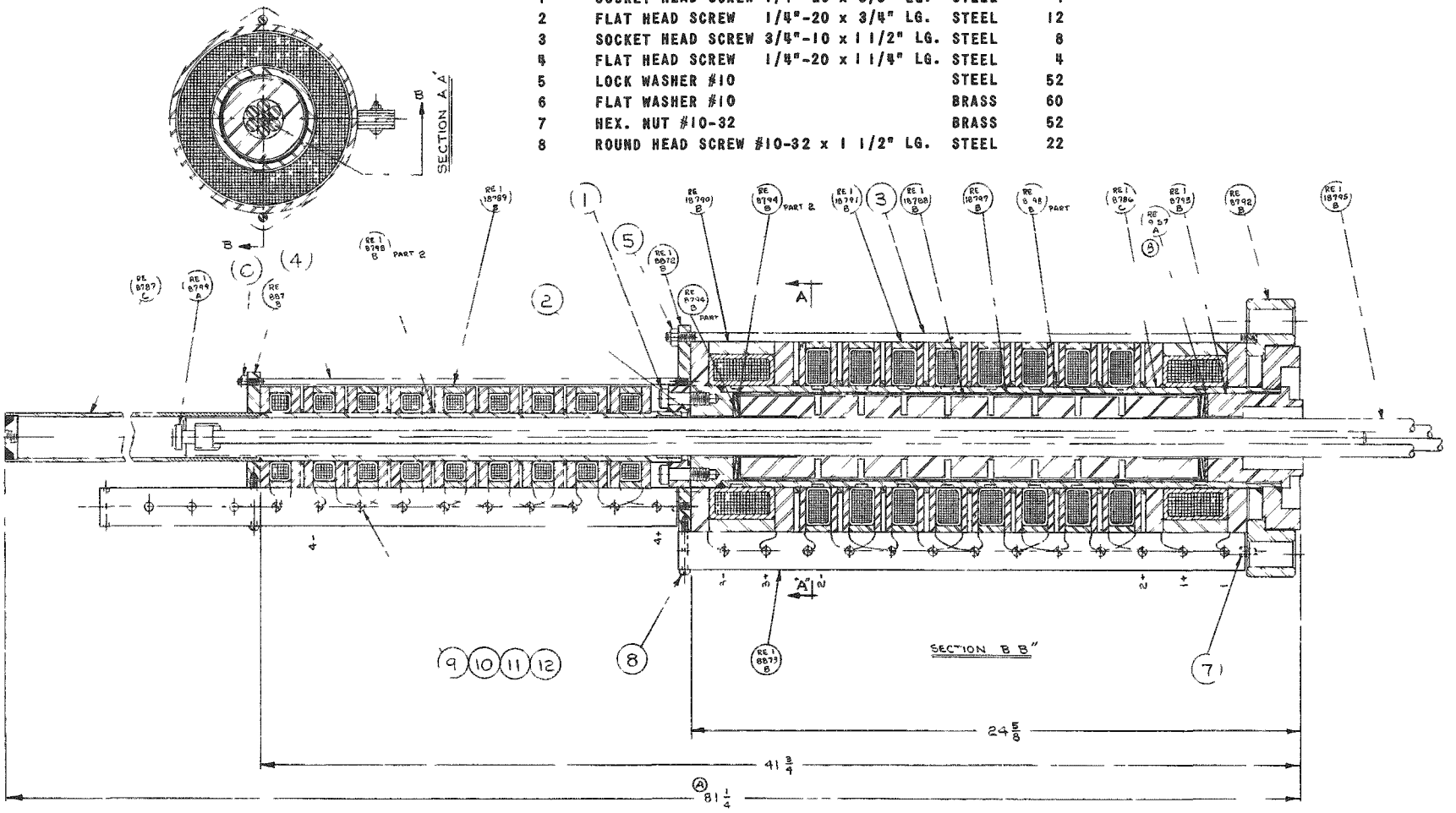

MAGNETIC JACK UNIT NO. 24 - ASSEMBLY (RE-1-18785-D)

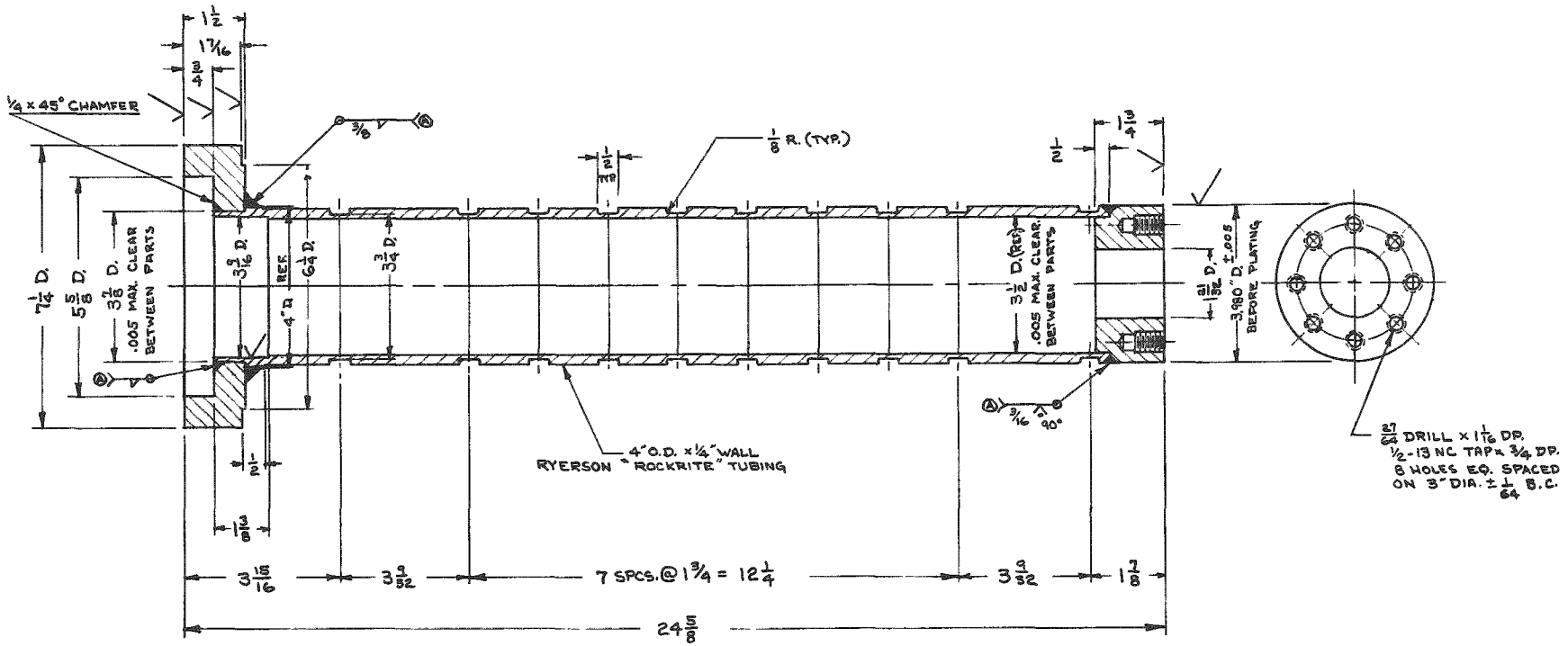

(A) WELD ROD E6015
DESIGN PRESS. 570
DESIGN MET. TEMP., °F 475
OPERATING PRESS. 300
OP. MET. TEMP., °F. 420
WELD JOINT EFF. 80%

SEQUENCE
1. WELD (A)
2. FINISH MACHINE ✓
3. "KANIGEN" NICKEL PLATE .002 ± .0005 THK. ALL SURFACES EXCEPT TAPPED HOLES.
4. COLD HYDROSTATIC PRESSURE TEST AT 860 PSI

NOTE: ALL TOLERANCES ± 1/32 UNLESS NOTED

NO. REQUIRED: 1 **MATERIAL: MILD STEEL**

LARGE PRESSURE SHELL (RE-1-18786-C)

SEQUENCE:
1. WELD Ⓐ
2. FINISH MACHINE ✓
3. COLD HYDROSTATIC PRESSURE TEST AT 1500 PSI

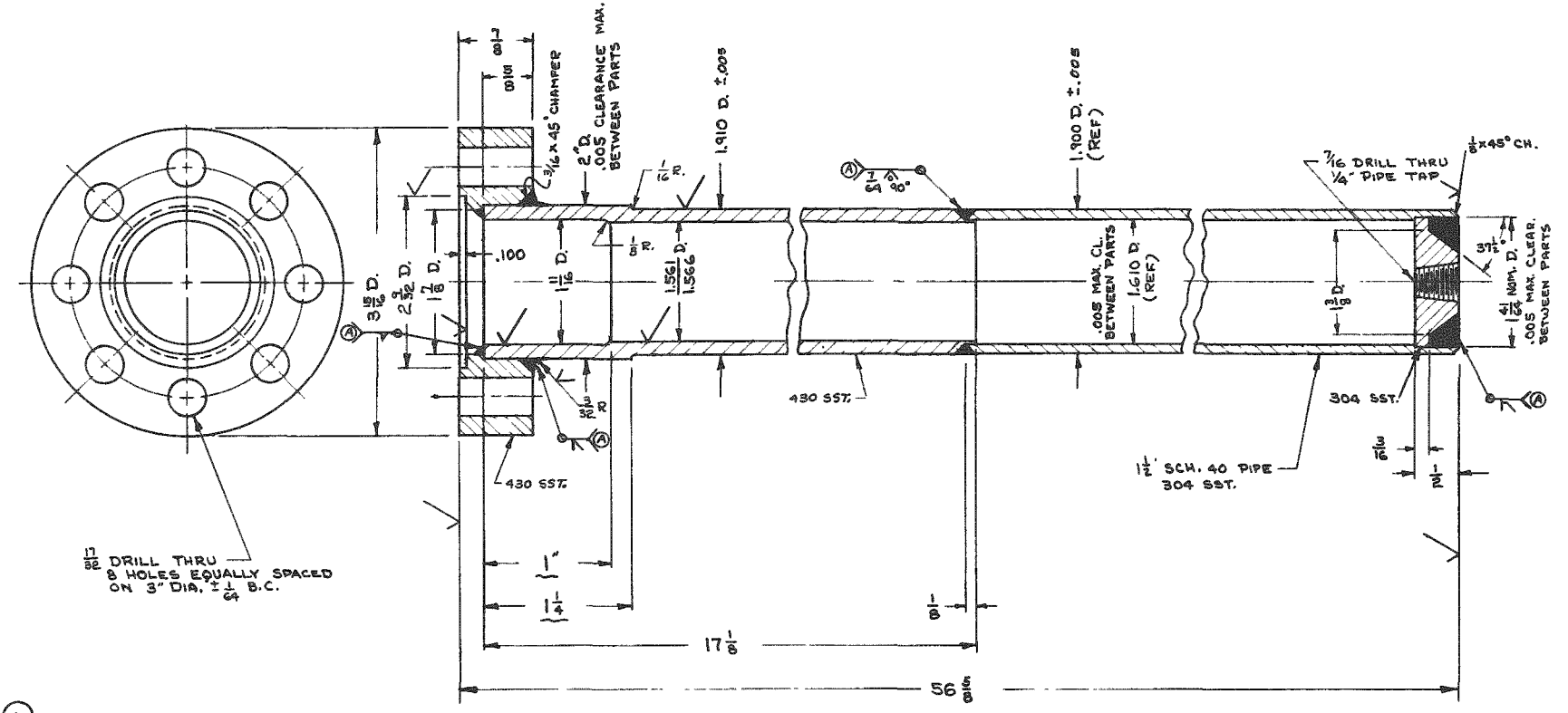

Ⓐ WELD ROD 308 SST LIME COATED

DESIGN PRESSURE	1000
DESIGN MET. TEMP., °F.	500
OPERATING PRESS.	300
OP. MET. TEMP., °F.	420
WELD JOINT EFF.	80%

ALL TOL. ± 1/32 UNLESS NOTED

NO. REQUIRED: 1 **MATERIAL:** AS NOTED

SMALL PRESSURE SHELL (RE-1-18787-C)

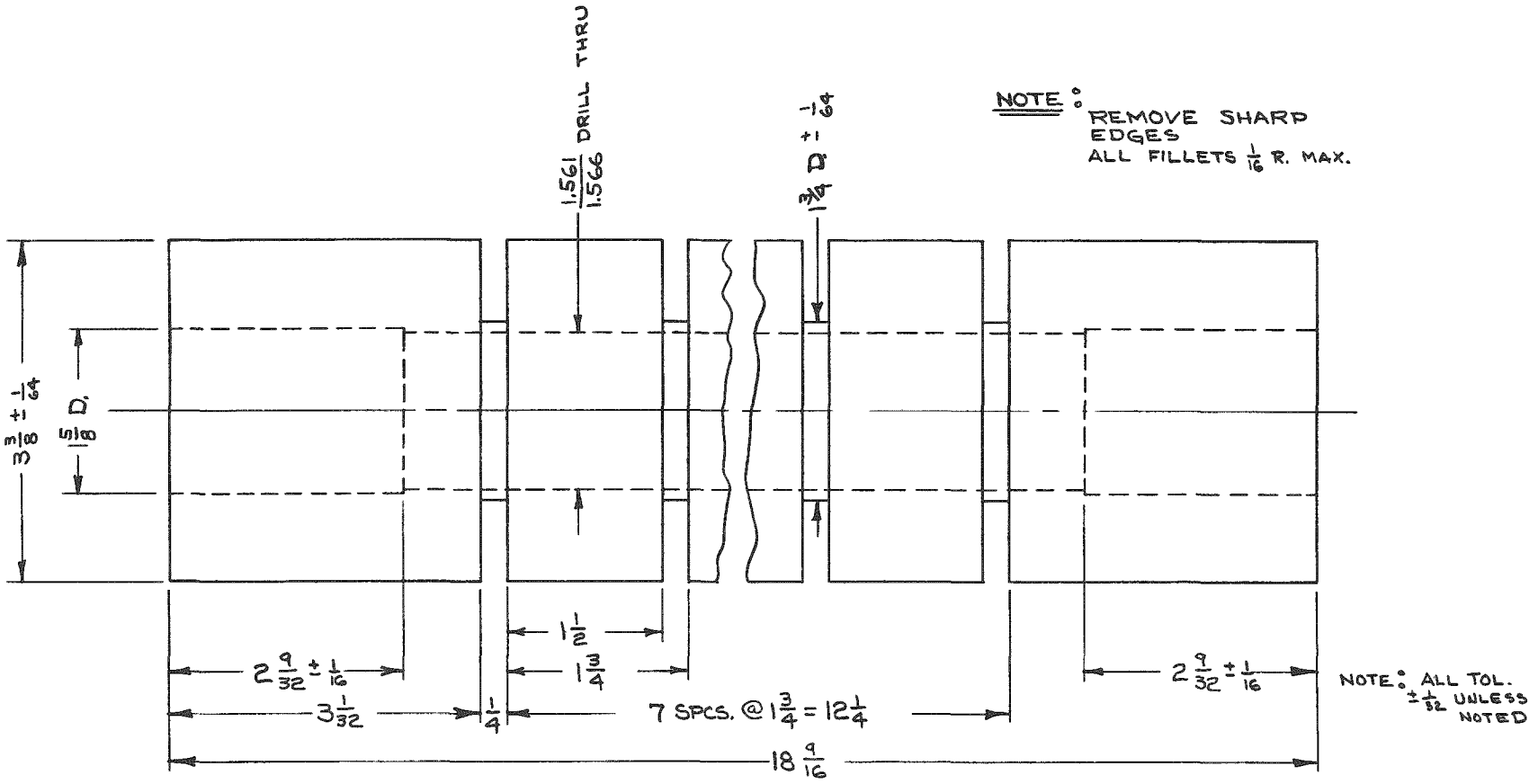

NO. REQUIRED: 1 **MATERIAL:** SST 430 F OR 430

ARMATURE (RE-1-18788-B)

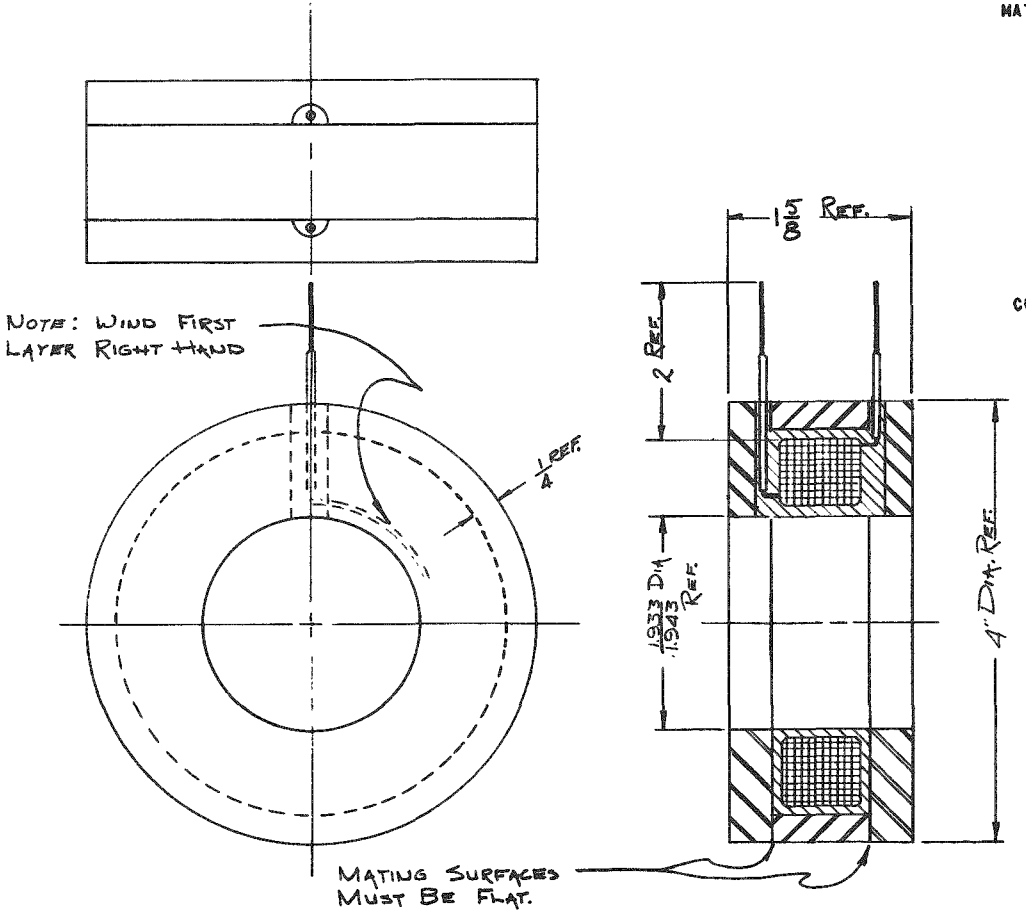

MATERIAL:

1. #22 MAGNET WIRE. DOUBLE GLASS - SILICONE
2. UNTREATED GLASS CLOTH TAPE.
3. FLEXIBLE INSULATING SLEEVE.
4. LOW CARBON STEEL TUBE 4" O.D. x 1/4" WALL x 7/8" LONG. ONE REQUIRED.
5. LOW CARBON STEEL PLATE 4 O.D. x 1.938 ± .005 I.D. x 3/8 THICK. ONE RADIAL SLOT 1/4 RADIUS 3/16 DEEP. TWO REQUIRED.
6. EPOXY RESIN.

CONSTRUCTION:

1. CLOSE WIND 19 LAYERS ON A 2 1/16 DIAMETER x 3/4 LONG MANDREL.
2. WRAP COIL ABOUT 1/16 THICK WITH GLASS CLOTH TAPE.
3. EXTEND WIRE ENDS RADIALLY OUT ABOUT 2" FROM ONE SIDE OF COIL.
4. SLIP AN INSULATING SLEEVE OVER EACH WIRE END. ALLOWING END OF WIRE TO EXTEND ABOUT 3/4" BEYOND SLEEVE.
5. CLEAN MILD STEEL PARTS TO PROVIDE A GOOD BOND WITH RESIN.
6. CEMENT MATING SURFACES OF STEEL PARTS IF NECESSARY TO PREVENT LEAKING OF RESIN BEFORE IT SETS. CEMENT MUST NOT CREATE A MAGNETIC GAP.
7. ASSEMBLE PARTS SO THAT THE TWO SLOTS ARE IN LINE WITHIN 1/16 AND THE WIRE ENDS EXTEND THRU THE CENTER OF SLOTS.
8. VACUUM IMPREGNATE ASSEMBLY WITH RESIN USING A TEFLON (1 15/16 DIA.) EXPANSION PLUG. LEAVE COATING OF RESIN ON SURFACES OF STEEL SHELL (EXCEPT BORE).

NOTE:
ALL TOLERANCES ± 1/32 UNLESS NOTED

NO. REQUIRED: 9 **MATERIAL:** AS NOTED

HOLD COIL (RE-1-18789-B)

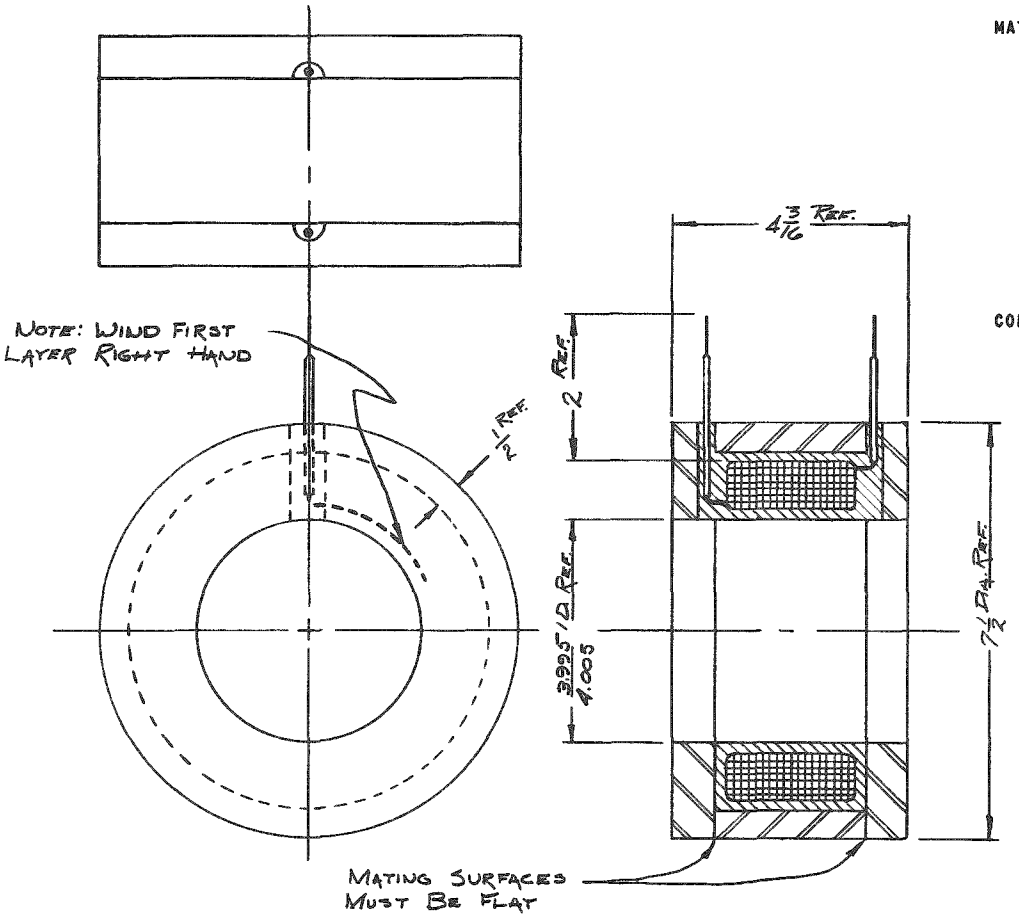

MATERIAL:

1. #20 MAGNET WIRE. DOUBLE GLASS - SILICONE.
2. UNTREATED GLASS CLOTH TAPE.
3. FLEXIBLE INSULATING SLEEVE.
4. LOW CARBON STEEL TUBE 7 1/2" O.D. x 1/2" WALL x 2 11/16 LONG. ONE REQUIRED.
5. LOW CARBON STEEL PLATE 7 1/2" O.D. x 4.000 ± .005 I.D. x 3/4" THICK. ONE RADIAL SLOT 1/4 RADIUS 3/16 DEEP. TWO REQUIRED.
6. EPOXY RESIN.

CONSTRUCTION:

1. CLOSE WIND 27 LAYERS ON A 4 1/8 DIAMETER x 2 9/16 LONG MANDREL.
2. WRAP COIL ABOUT 1/16 THICK WITH GLASS CLOTH TAPE.
3. EXTEND WIRE ENDS RADIALLY OUT ABOUT 2" FROM ONE SIDE OF COIL.
4. SLIP AN INSULATING SLEEVE OVER EACH WIRE END. ALLOWING END OF WIRE TO EXTEND ABOUT 3/4" BEYOND SLEEVE.
5. CLEAN MILD STEEL PARTS TO PROVIDE A GOOD BOND WITH RESIN.
6. CEMENT MATING SURFACES OF STEEL PARTS IF NECESSARY TO PREVENT LEAKING OF RESIN BEFORE IT SETS. CEMENT MUST NOT CREATE A MAGNETIC GAP.
7. ASSEMBLE PARTS SO THAT THE TWO SLOTS ARE IN LINE WITHIN 1/16 AND THE WIRE ENDS EXTEND THRU THE CENTER OF SLOTS.
8. VACUUM IMPREGNATE ASSEMBLY WITH RESIN USING A TEFLON (4" DIA.) EXPANSION PLUG. LEAVE COATING OF RESIN ON SURFACES OF STEEL SHELL (EXCEPT BORE).

NOTE: ALL TOLERENCES ± 1/32 UNLESS NOTED

NO. REQUIRED: 2 **MATERIAL: AS NOTED**

MOVE COIL (RE-1-18790-B)

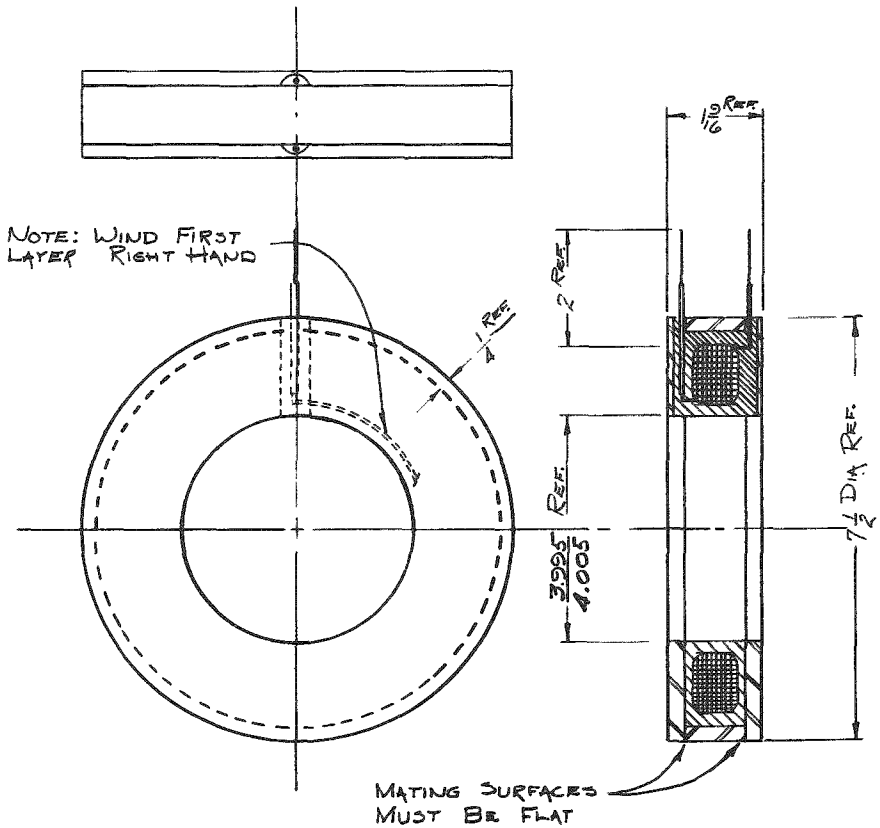

MATERIAL:

1. #14 MAGNET WIRE. DOUBLE GLASS - SILICONE.
2. UNTREATED GLASS CLOTH TAPE.
3. FLEXIBLE INSULATING SLEEVE.
4. LOW CARBON STEEL TUBE 7 1/2" O.D. x 1/4" WALL x 1 1/16 LONG. ONE REQUIRED.
5. LOW CARBON STEEL PLATE 7 1/2" O.D. x 4.000 ± .005 I.D. x 1/4" THICK, ONE RADIAL SLOT 1/4 RADIUS 3/16 DEEP. TWO REQUIRED.
6. EPOXY RESIN.

CONSTRUCTION:

1. CLOSE WIND 19 LAYERS ON A 4 1/8 DIAMETER x 15/16 LONG MANDREL.
2. WRAP COIL ABOUT 1/16" THICK WITH GLASS CLOTH TAPE.
3. EXTEND WIRE ENDS RADIALLY OUT ABOUT 2" FROM ONE SIDE OF COIL.
4. SLIP AN INSULATING SLEEVE OVER EACH WIRE END. ALLOWING END OF WIRE TO EXTEND ABOUT 3/4" BEYOND SLEEVE.
5. CLEAN MILD STEEL PARTS TO PROVIDE A GOOD BOND WITH RESIN.
6. CEMENT MATING SURFACES OF STEEL PARTS IF NECESSARY TO PREVENT LEAKING OF RESIN BEFORE IT SETS. CEMENT MUST NOT CREATE A MAGNETIC GAP.
7. ASSEMBLE PARTS SO THAT THE TWO SLOTS ARE IN LINE WITHIN 1/16 AND THE WIRE ENDS EXTEND THRU THE CENTER OF SLOTS.
8. VACUUM IMPREGNATE ASSEMBLY WITH RESIN USING A TEFLON (4" D.) EXPANSION PLUG. LEAVE COATING OF RESIN ON SURFACES OF STEEL SHELL (EXCEPT BORE)

NOTE: ALL TOLERENCES ± 1/32 UNLESS NOTED

NO. REQUIRED: 8 **MATERIAL:** AS NOTED

GRIP COIL (RE-1-18791-B)

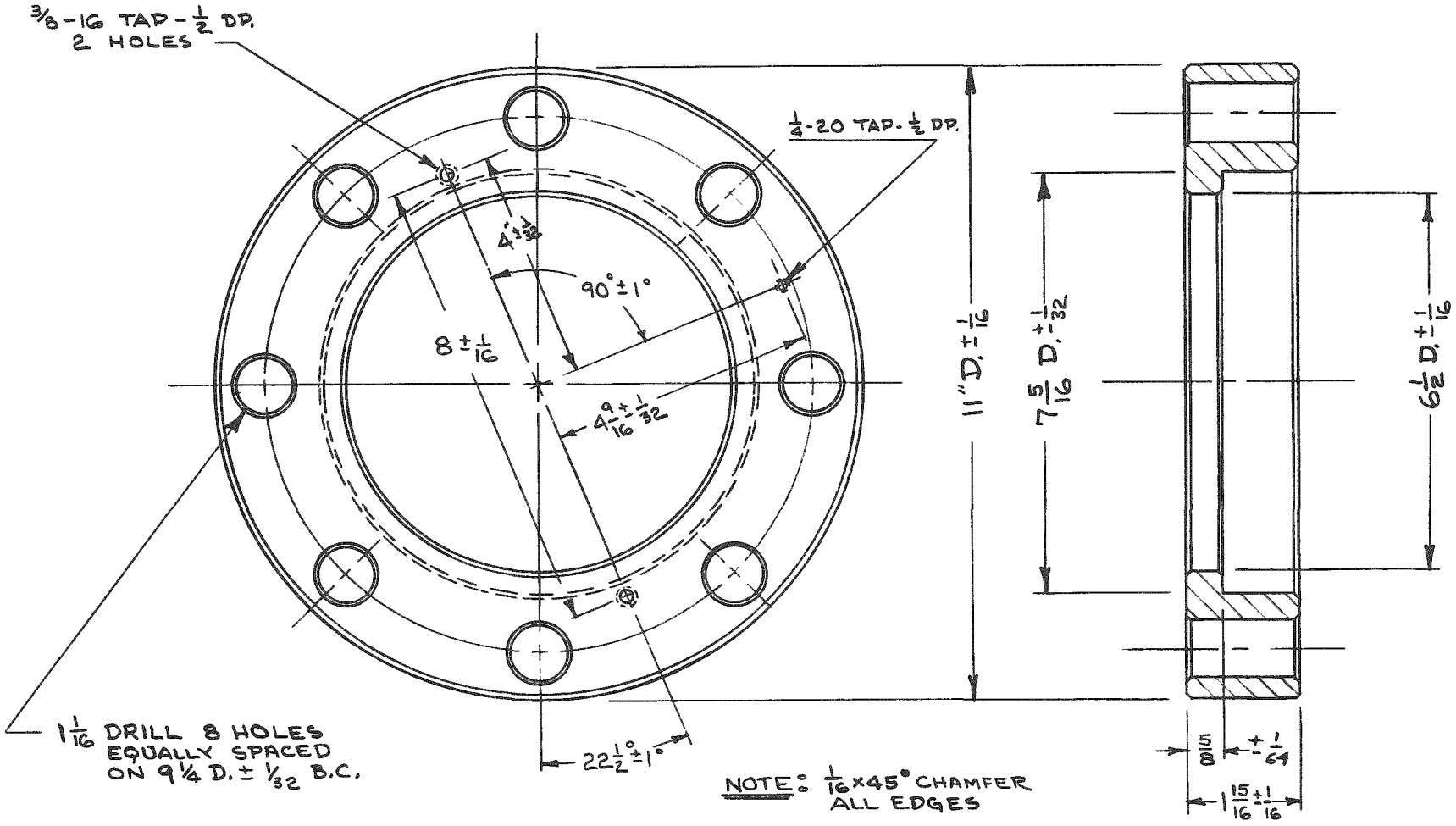

NO. REQUIRED: 1 MATERIAL: MILD STEEL

FLANGE RING (RE-1-18792-B)

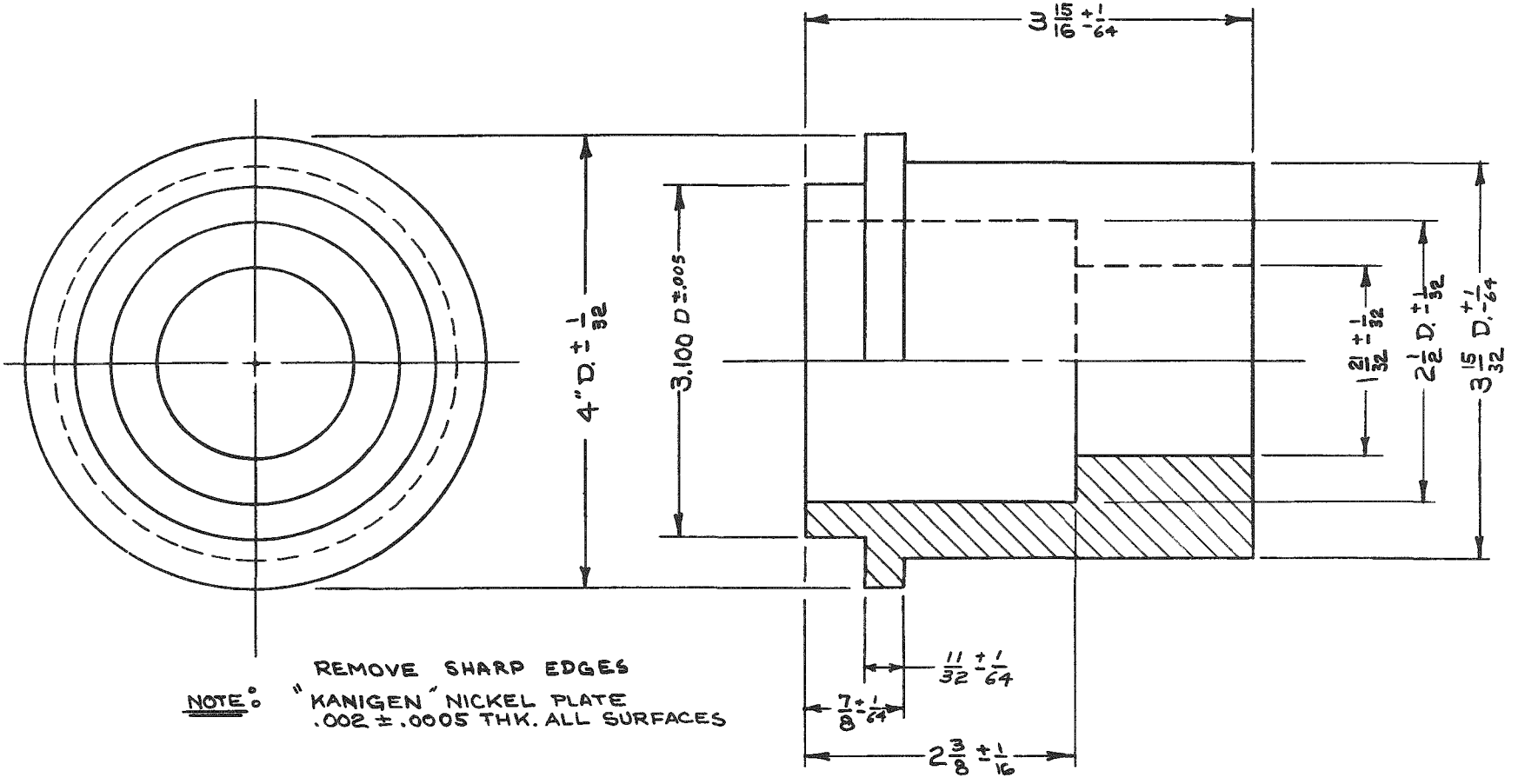

NOTE: REMOVE SHARP EDGES
"KANIGEN" NICKEL PLATE
.002 ± .0005 THK. ALL SURFACES

NO. REQUIRED: 1 **MATERIAL:** MILD STEEL

PLUG (RE-1-18793-B)

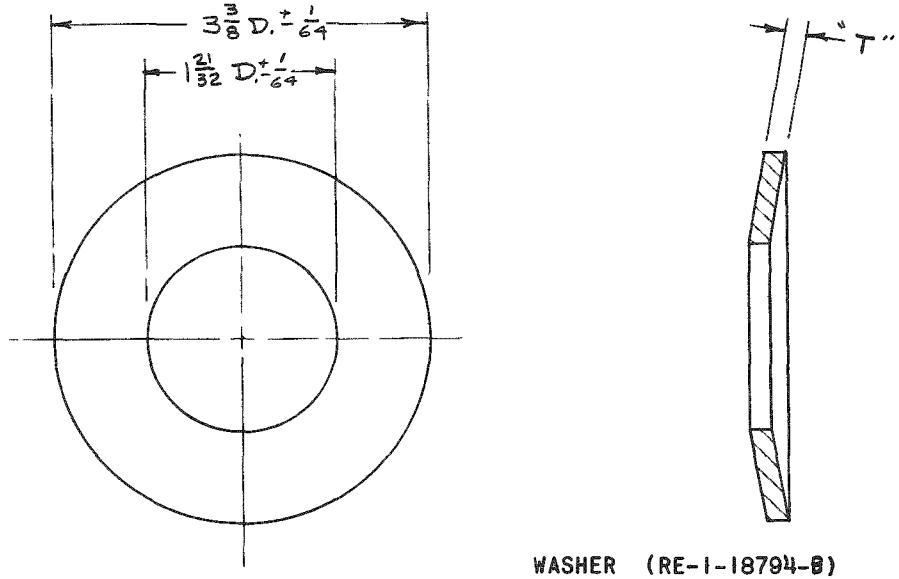

NOTE: TO GIVE DESIRED SPRING BACK: PRESS WITH 10° DIE THEN WITH FLAT DIE.

PART	"T"	MATERIAL	No. REQ'D
1	3/16 ± 1/64	430 F OR 430 SST	2
2	1/64 ± .003	304 SST	2

WASHER (RE-1-18794-B)

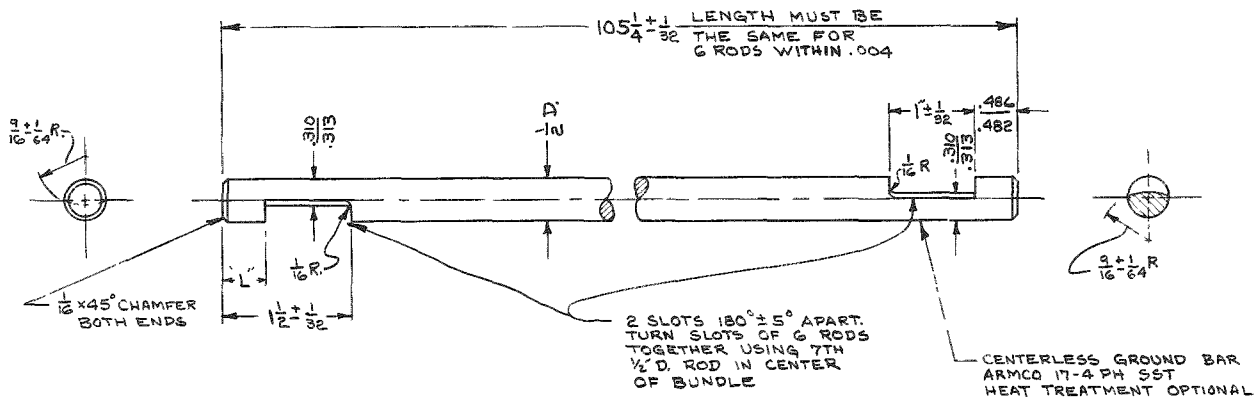

PART	"L"	NO REQ'D
1	.486" / .482"	5
2	* 0"	1

* FILE KNOB FOR LENGTH "L" TO MATCH 9/16 R. OR SLIGHTLY BELOW ON ONE END OF ONE ROD ONLY.

DRIVE ROD (RE-1-18795-B)

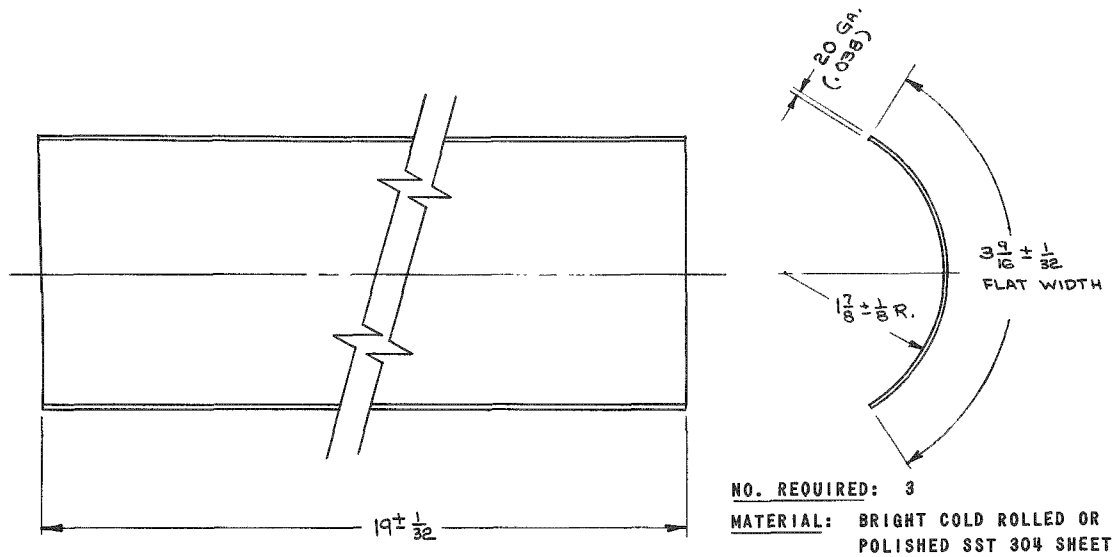

NO. REQUIRED: 3

MATERIAL: BRIGHT COLD ROLLED OR POLISHED SST 304 SHEET

SLEEVE (RE-1-18797-B)

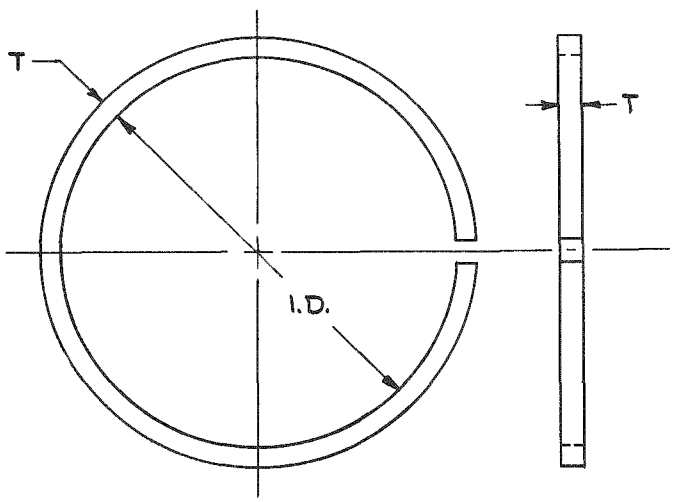

PART	NO. REQ'D.	T	I.D.	FLAT LENGTH
1	9	$\frac{3}{16}$	$3\frac{15}{16} \pm \frac{1}{16}$	$12\frac{3}{4} \pm \frac{1}{16}$
2	8	$\frac{1}{8}$	$1\frac{13}{16} \pm \frac{1}{16}$	$5\frac{9}{16} \pm \frac{1}{16}$

COIL SPACER (RE-1-18798-B)

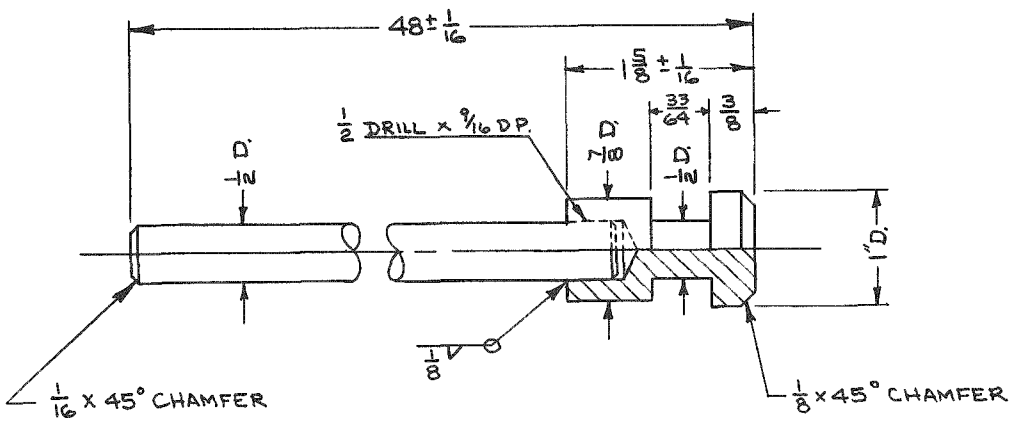

NOTE: ALL TOL. $\pm \frac{1}{64}$ UNLESS NOTED

NO. REQUIRED: 1 MATERIAL: SST 304 OR 347

FILLER ROD (RE-1-18799-A)

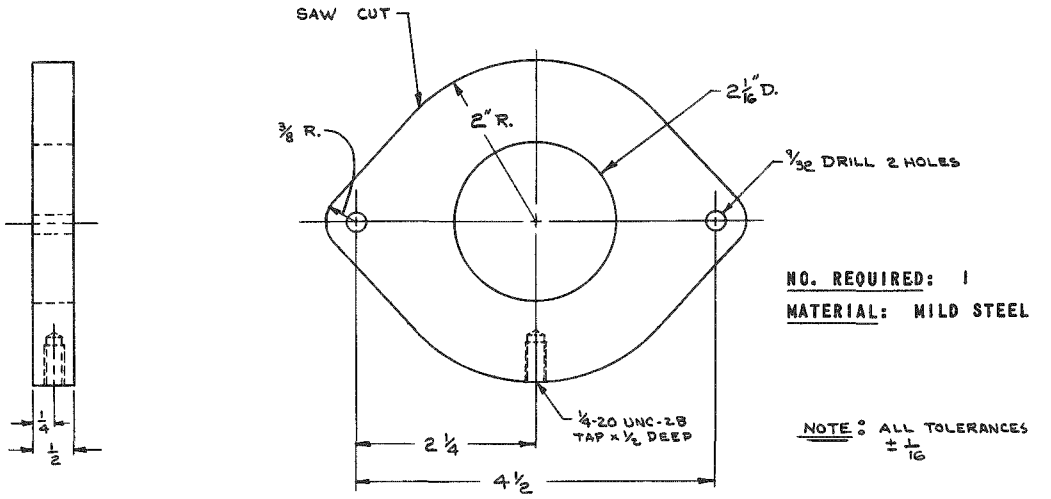

SMALL COIL CLAMP (RE-1-18871-B)

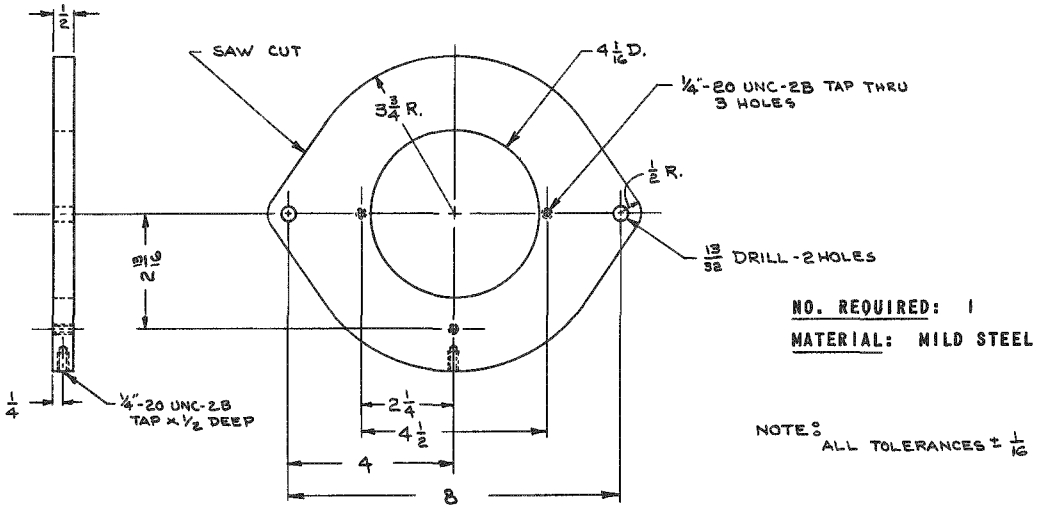

LARGE COIL CLAMP (RE-1-18872-B)

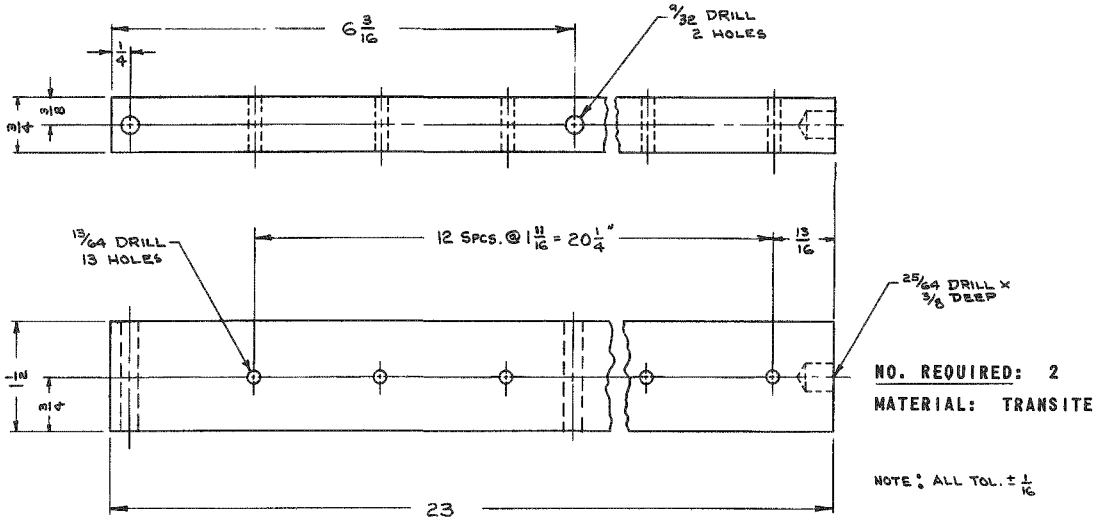

TERMINAL STRIP (RE-1-18873-B)

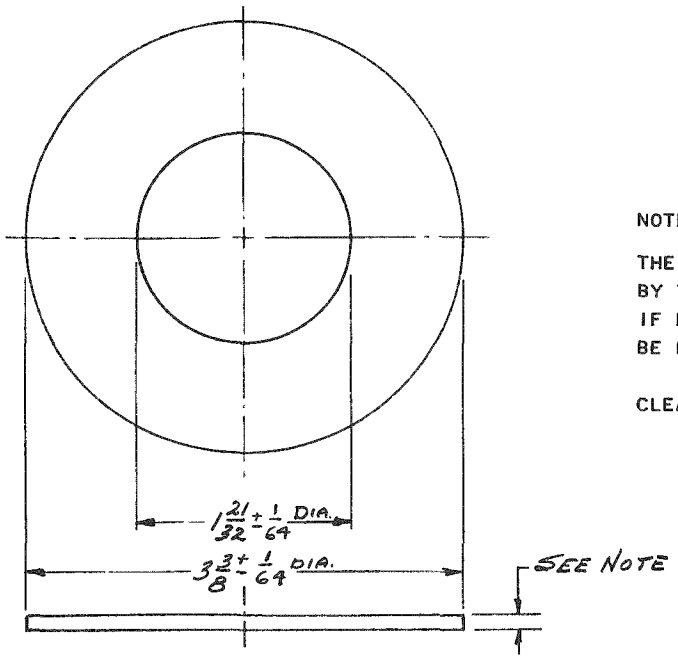

NOTE:

THE THICKNESS OF THIS SHIM IS DETERMINED BY TEST TO GIVE THE STEP LENGTH SPECIFIED. IF NECESSARY, UP TO A MAXIMUM OF .075" MAY BE REMOVED FROM EACH END OF THE ARMATURE (RE-1-18788-B) TO GIVE THE NECESSARY CLEARANCE.

NO. REQUIRED: 1

MATERIAL: SST 430 F OR 430

SHIM (RE-1-19157-A)

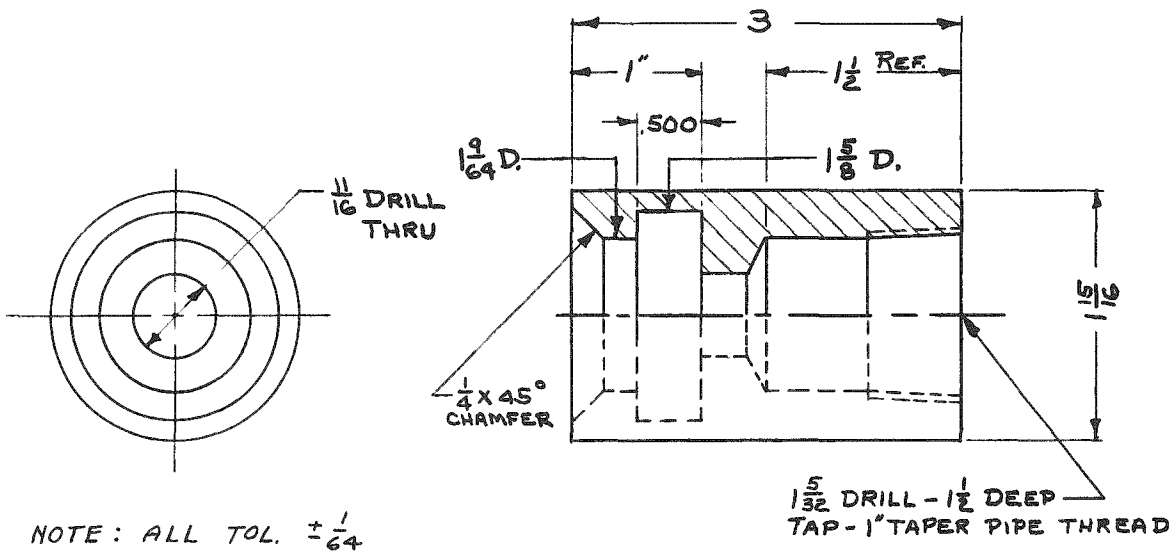

NOTE: ALL TOL. ± 1/64

NO. REQUIRED: 1

MATERIAL: SST 304 OR 347

CONNECTOR (RE-1-17894-A)

APPENDIX B

MANUFACTURING DRAWINGS OF MAGNETIC JACK UNIT NO. 27

Unit No. 27 is designed for applications which require the drive to be as short as possible.

Table V

MANUFACTURING DRAWINGS OF MAGNETIC JACK UNIT NO. 27

Dwg. No.	Description	Ref. Page
RE-1-20375-D	Assembly	50
20396-B	Pressure Shell - Large End	51
20397-B	Pipe - Large End	51
20398-A	Flange - Large End	52
20391-B	Pressure Shell - Small End	52
20393-A	Plug - Small End	52
20394-A	Pipe - Small End	53
20395-B	Flange - Small End	53
20391-B	Pressure Shell	54
20399-B	Holder	54
20400-B	Armature	54
20376-A	Magnetic Disc	55
20377-B	Armature End Piece	55
20401-B	Armature - Welded Assembly	56
20402-B	Holder - Welded Assembly	56
RE-6-19975-B	Coil Shell	57
RE-1-19976-B	Coil - 15/16 in. long	58
19977-B	Coil - 2-1/2 in. long	59
20380-A	Nonmagnetic Washer	60
20381-A	Sleeve	60
20383-A	Position Indicator Rod	61
RE-1-20384-A	Filler Rod	61
20177-B	Drive Rod	62
20378-A	Cushion Washer	63
20379-A	Shim	63
20382-B	Flange	63
20386-B	Flanged Tube	64
20385-A	Plate	64
20387-A	Clamp	64
20388-A	Coil Spacer	65
20389-A	Terminal Strip	65
RE-1-20390-A	Tie Rod	65

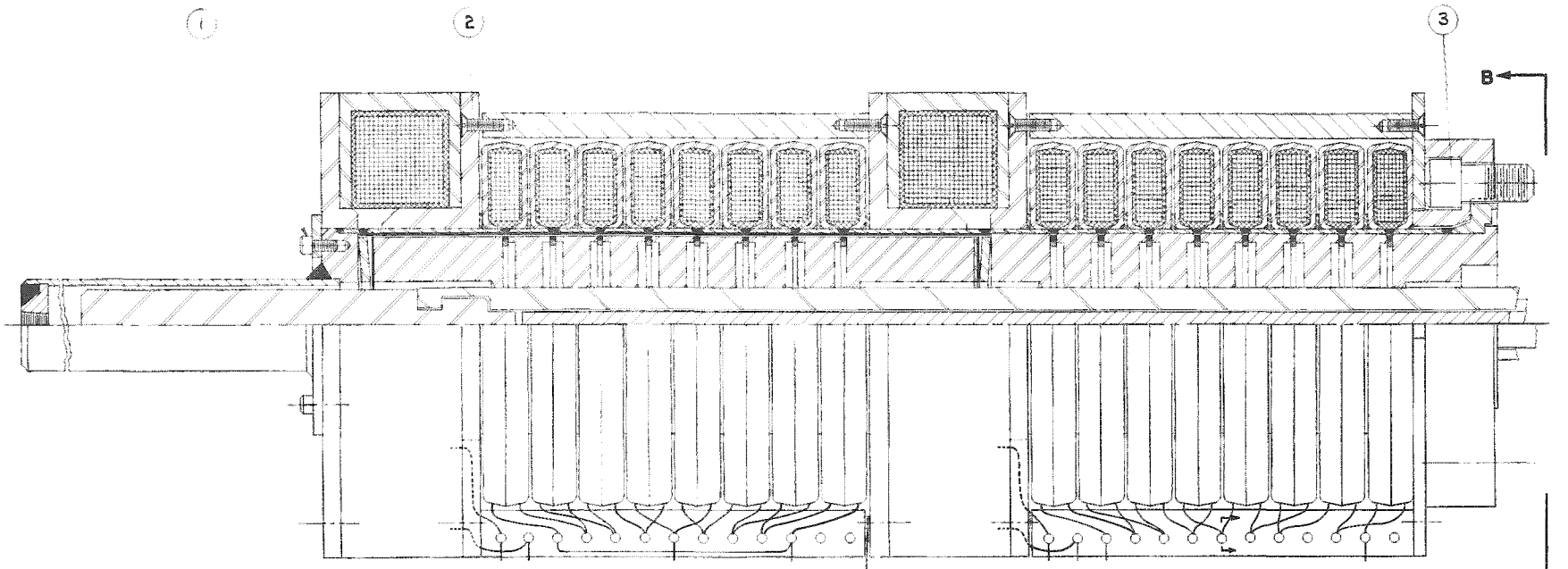

SECTION "A-A"

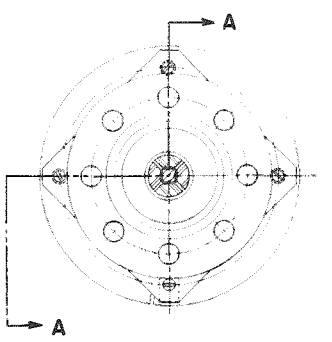

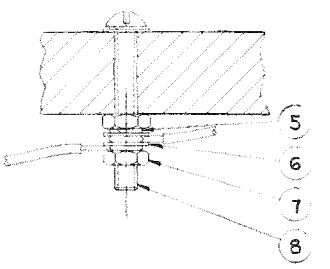

PART NO.	DESCRIPTION	MAT'L.	NO. REQ'D
1	SOCKET HEAD SCREW 1/2"-13 x 1 1/2" LG	STEEL	8
2	GASKET - FLEXITALLIC #R4-6E		1
3	TIE ROD - 3/8" D. x 24" LG 3/8"-16 x 1" LG THD	STEEL	2
4	TIE ROD - 1/4" D. x 18" LG 1/4"-20 x 3/4" LG THD	STEEL	2
5	HEX. NUT - 3/8"-16	STEEL	2
6	HEX. NUT - 1/4"-20	STEEL	2
7	SOCKET HEAD SCREW - 1/4"-20 x 3/8" LG	STEEL	2
8	ROUND HEAD SCREW - 1/4"-20 x 1 3/4" LG	STEEL	2
9	ROUND HEAD SCREW - #10-32 x 1 1/8" LG	BRASS	23
10	HEX. NUT - #10-32	BRASS	31
11	FLAT WASHER - #10	BRASS	69
12	LOCK WASHER - #10	STEEL	31

MAGNETIC JACK UNIT NO. 27 - ASSEMBLY (RE-1-20375-D)

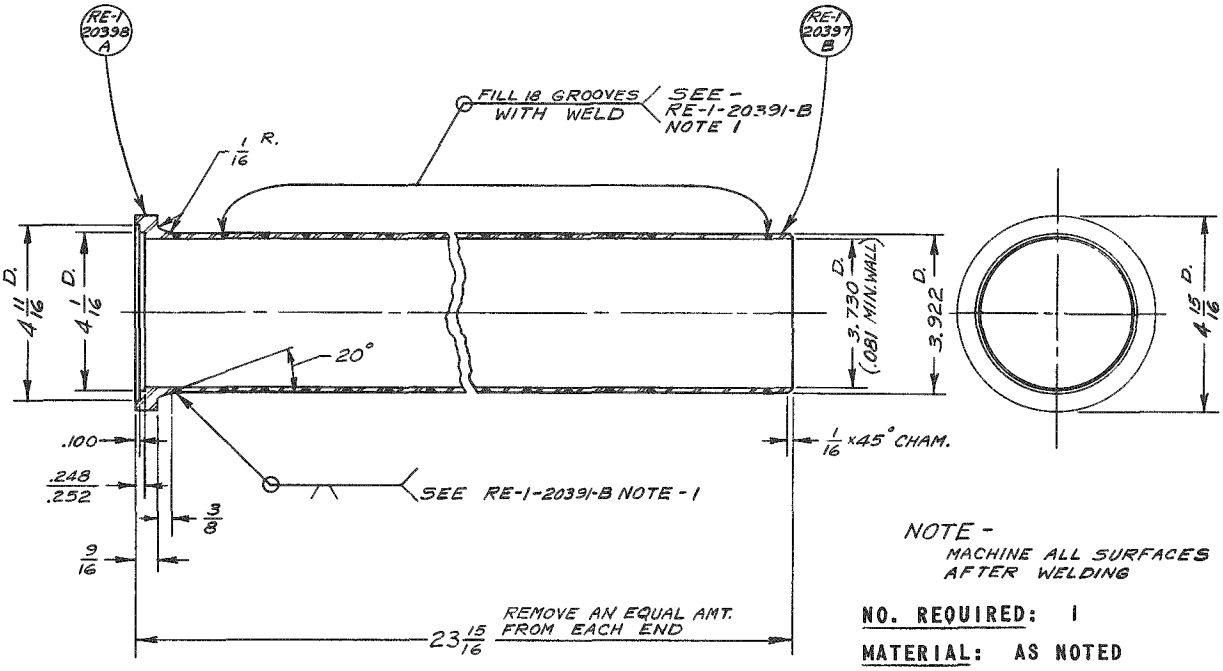

NOTE -
MACHINE ALL SURFACES AFTER WELDING

NO. REQUIRED: 1

MATERIAL: AS NOTED

PRESSURE SHELL - LARGE END (RE-1-20396-B)

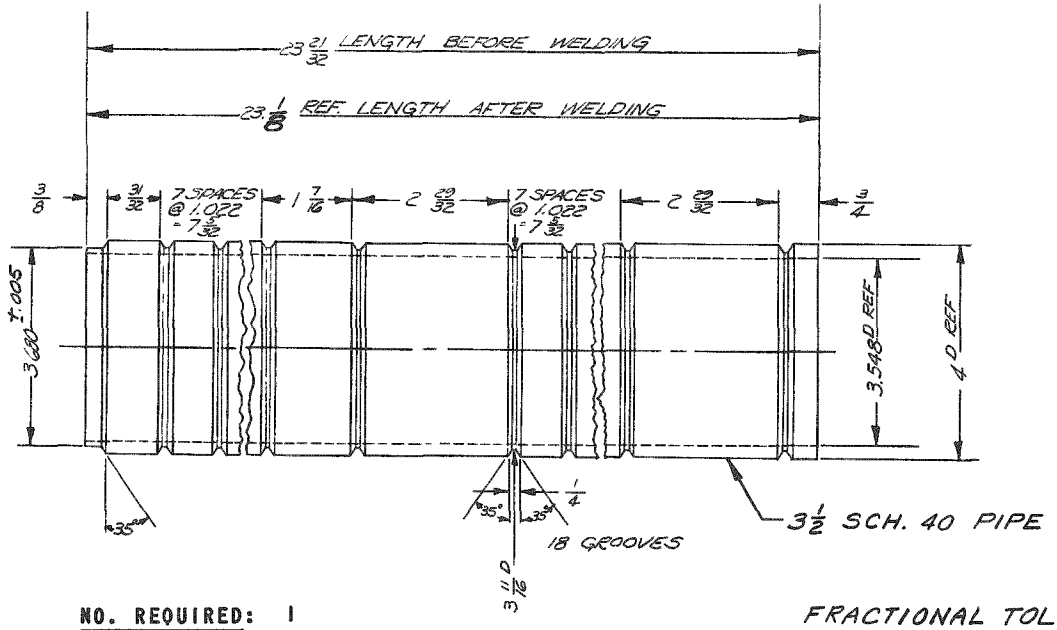

NO. REQUIRED: 1

MATERIAL: SST 405

FRACTIONAL TOLERANCE $\pm \frac{1}{32}$
ANGULAR TOLERANCE $\pm 2°$

PIPE - LARGE END (RE-1-20397-B)

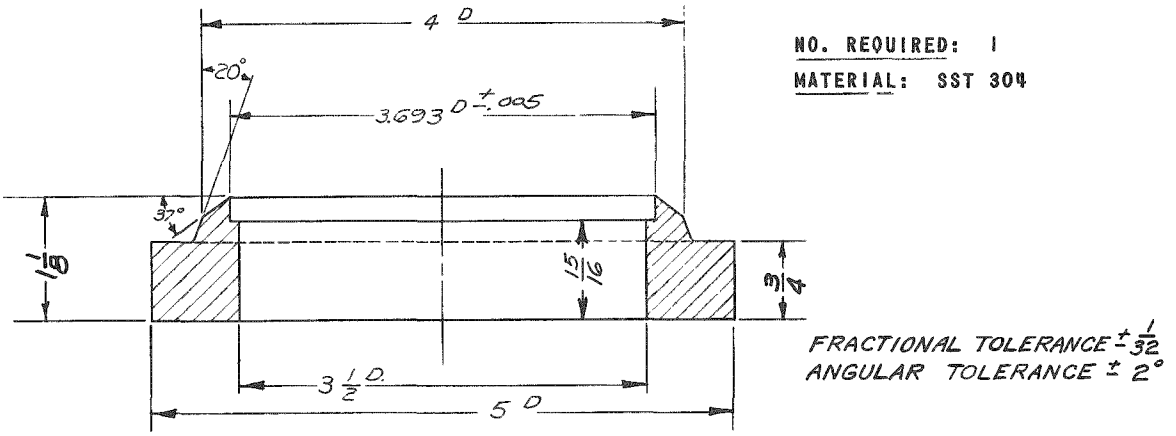

FLANGE - LARGE END (RE-1-20398-A)

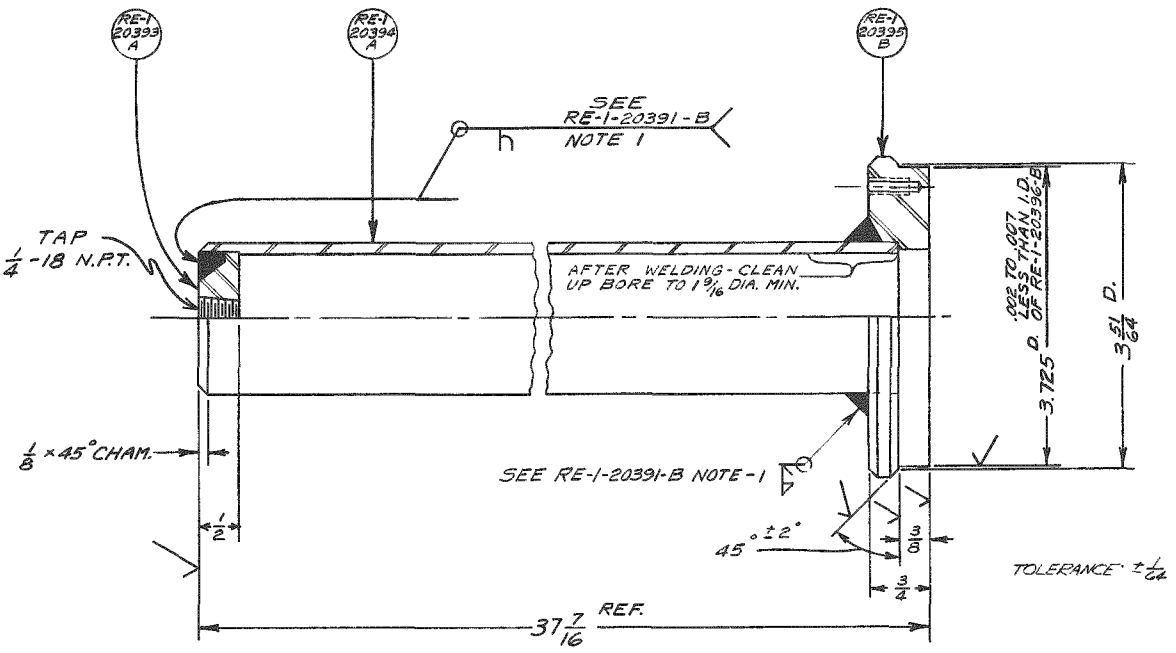

PRESSURE SHELL - SMALL END (RE-1-20392-B)

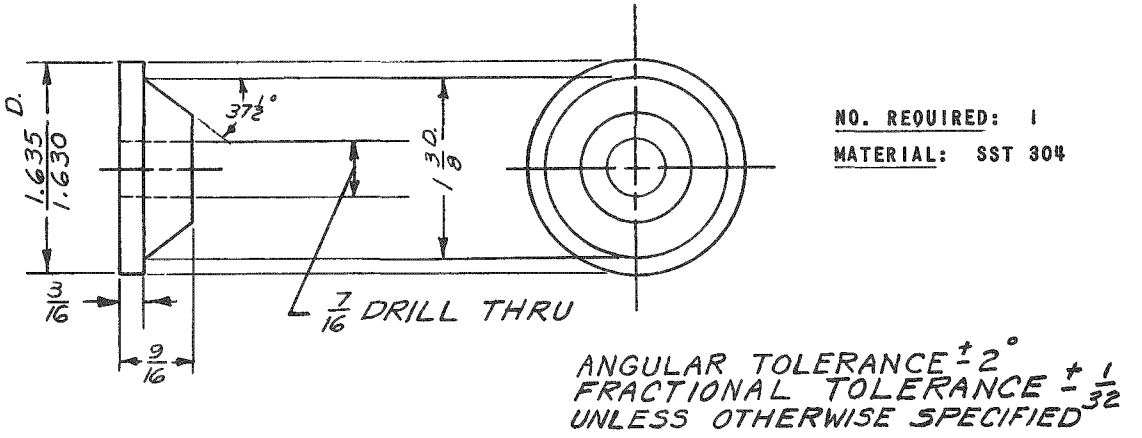

PLUG - SMALL END (RE-1-20393-A)

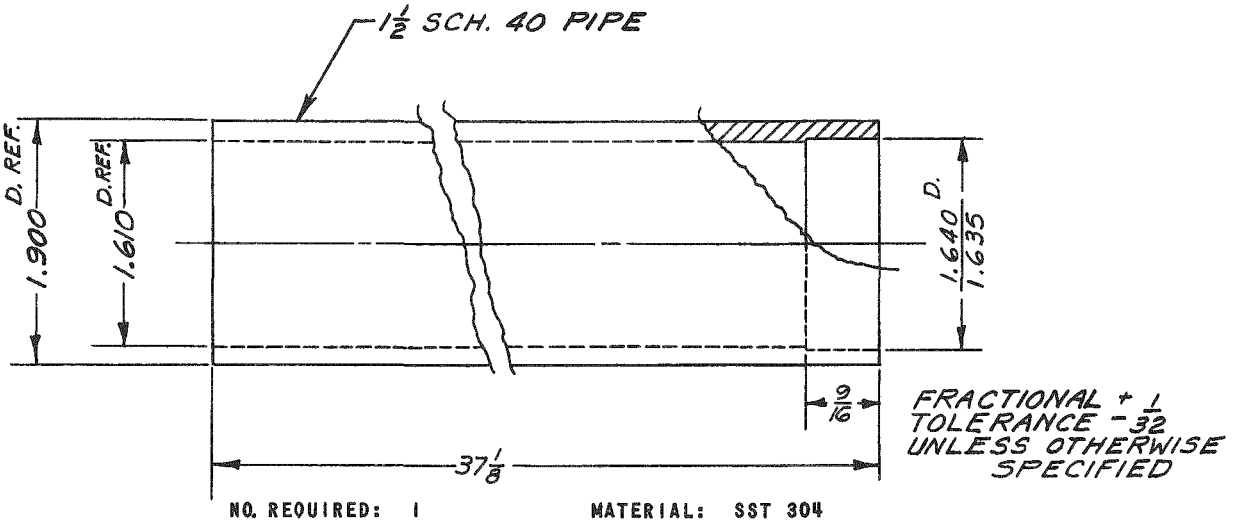

NO. REQUIRED: 1 MATERIAL: SST 304

PIPE - SMALL END (RE-1-20394-A)

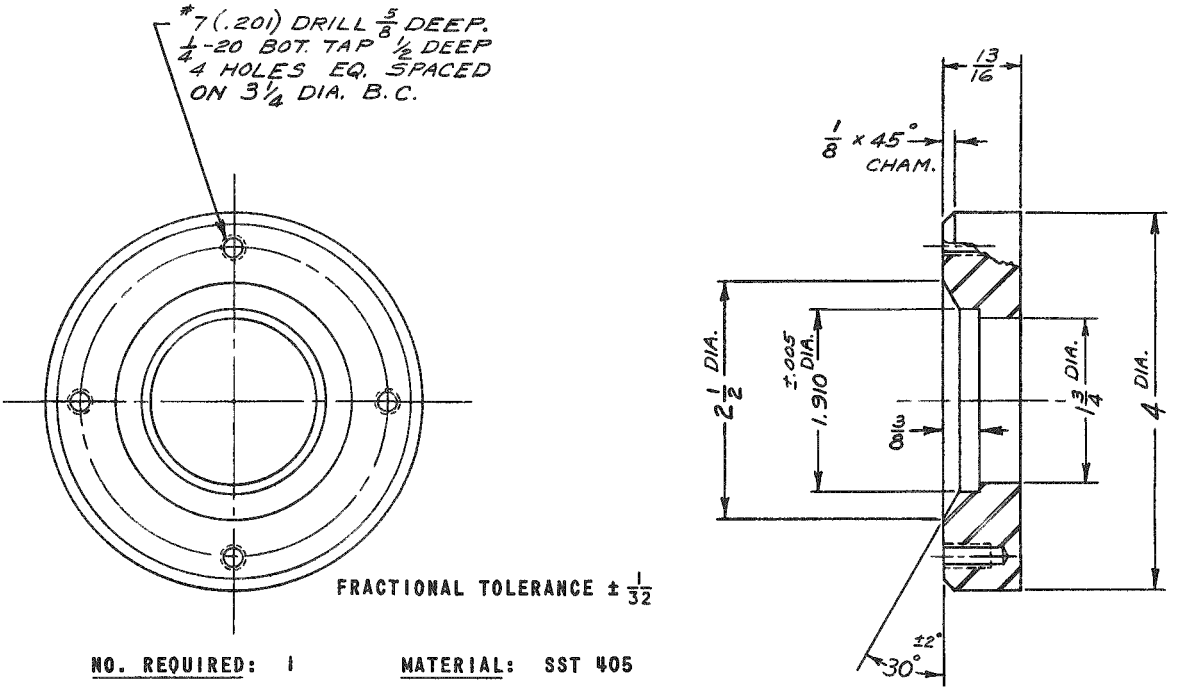

FRACTIONAL TOLERANCE ± 1/32

NO. REQUIRED: 1 MATERIAL: SST 405

FLANGE - SMALL END (RE-1-20395-B)

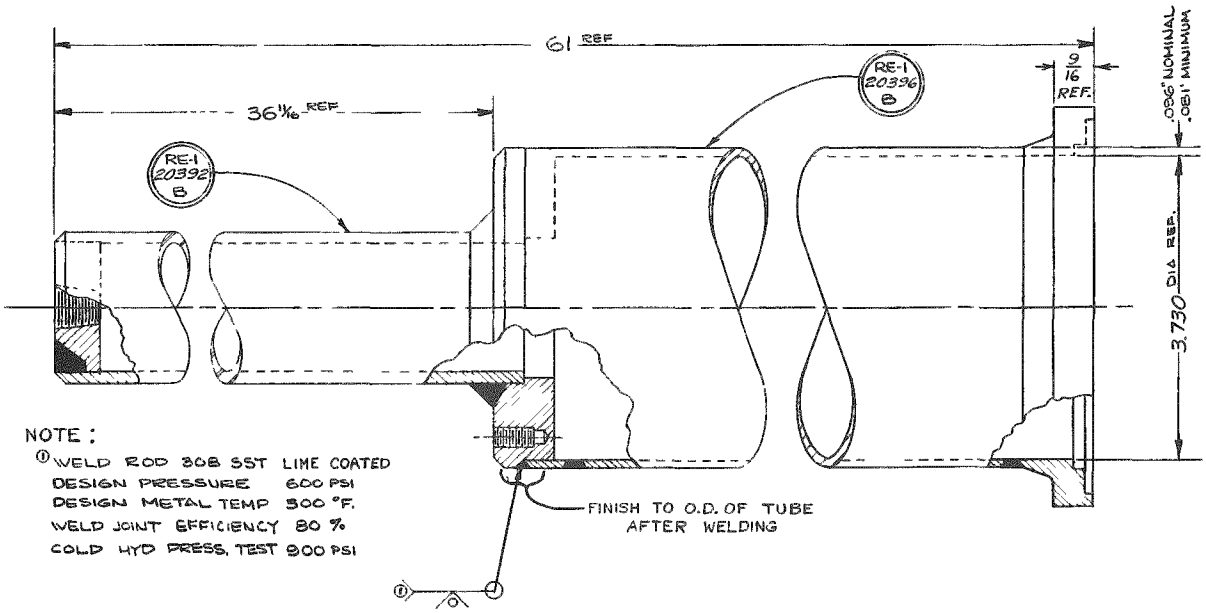

PRESSURE SHELL (RE-1-20391-B)

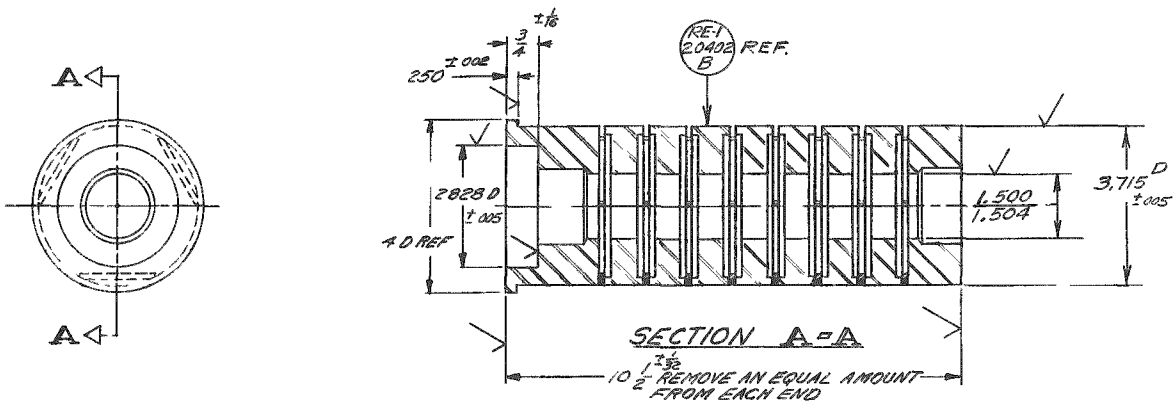

HOLDER (RE-1-20399-B)

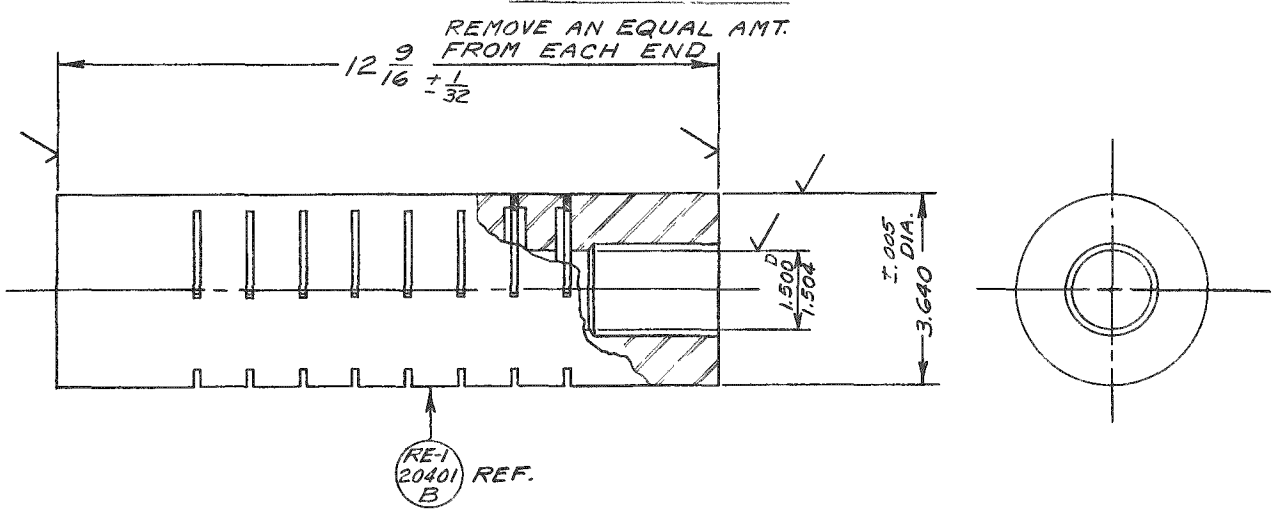

ARMATURE (RE-1-20400-B)

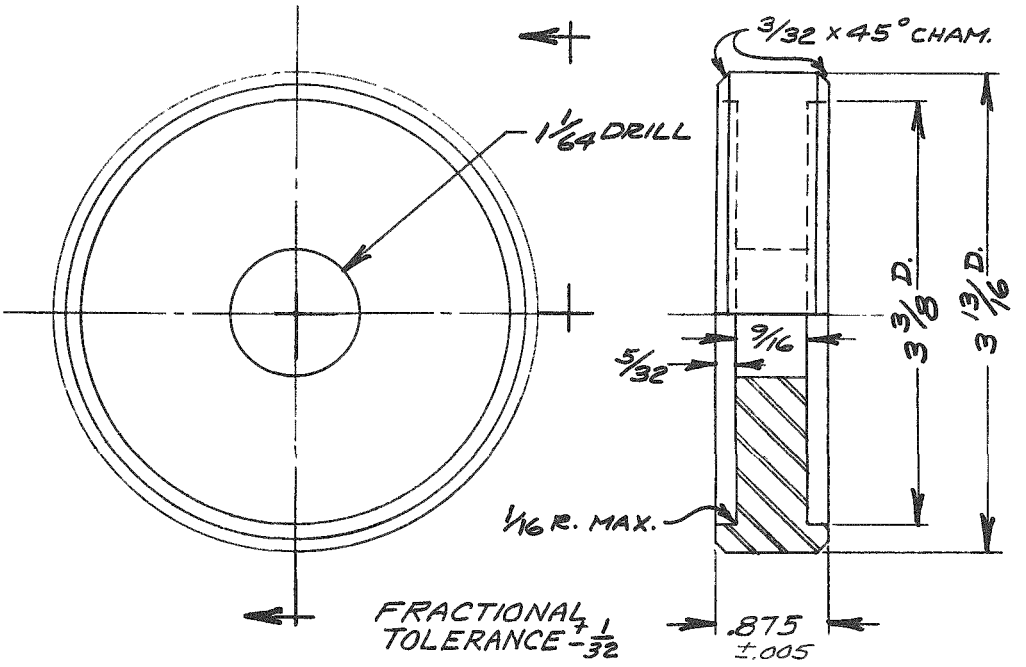

NO. REQUIRED: 14 MATERIAL: SST 405

MAGNETIC DISC (RE-I-20376-A)

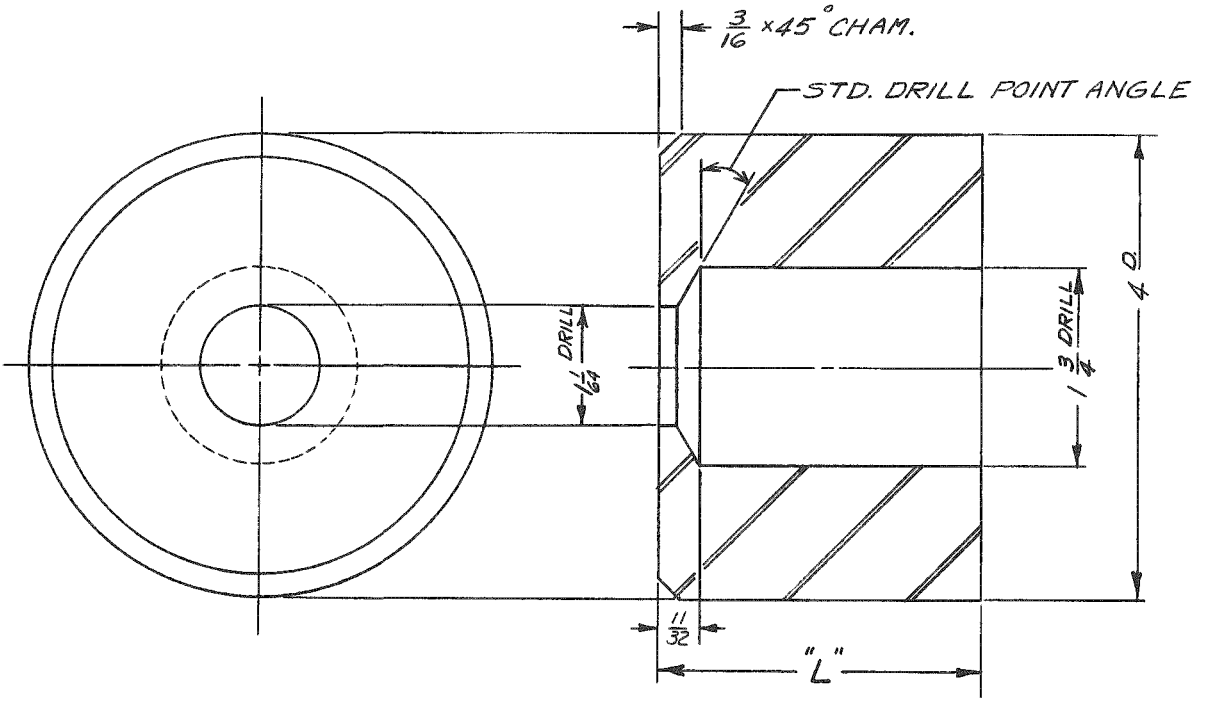

MATERIAL: SST 405

FRACTIONAL TOLERANCE $\pm\frac{1}{32}$

ARMATURE END PIECE (RE-I-20377-B)

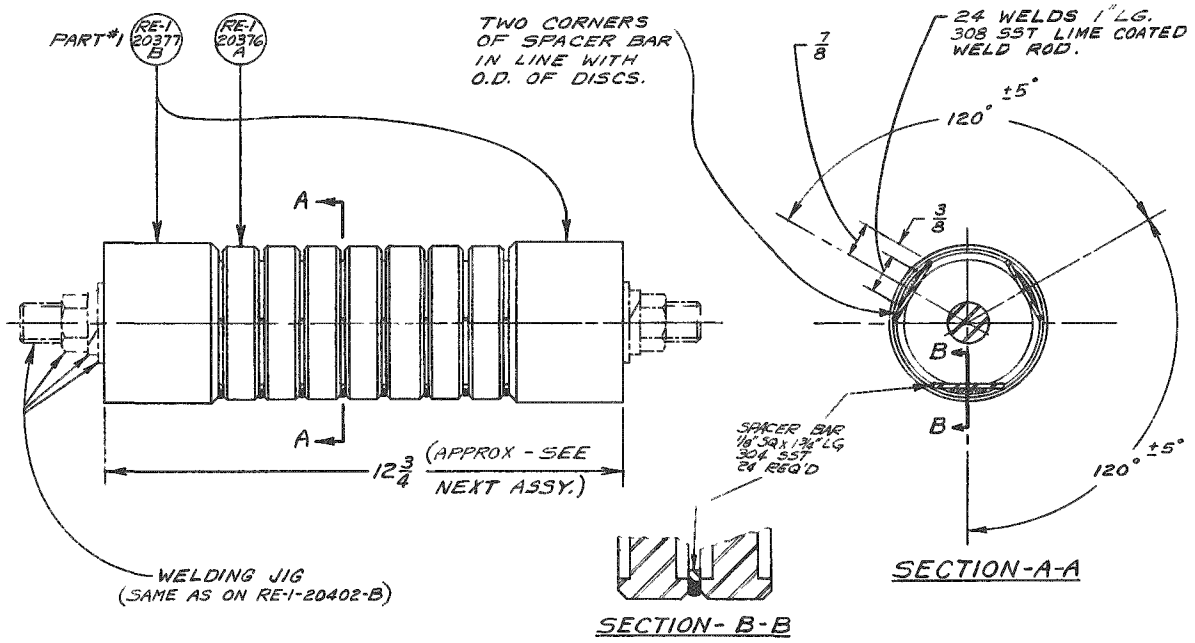

ARMATURE - WELDED ASSEMBLY (RE-1-20401-B)

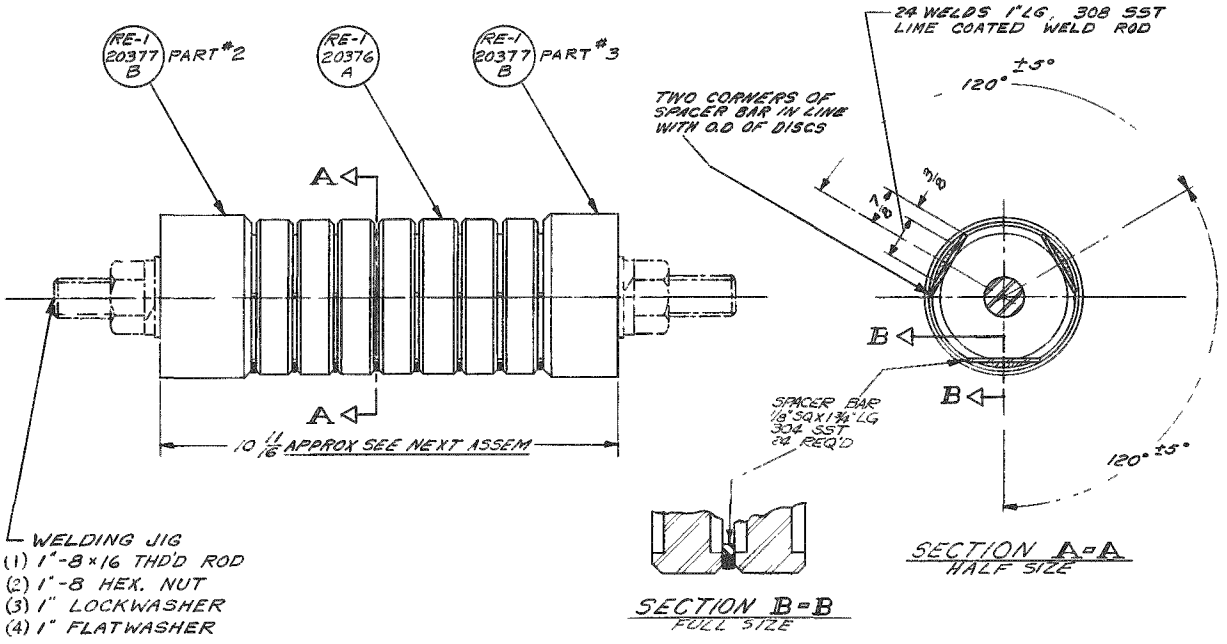

HOLDER - WELDED ASSEMBLY (RE-1-20402-B)

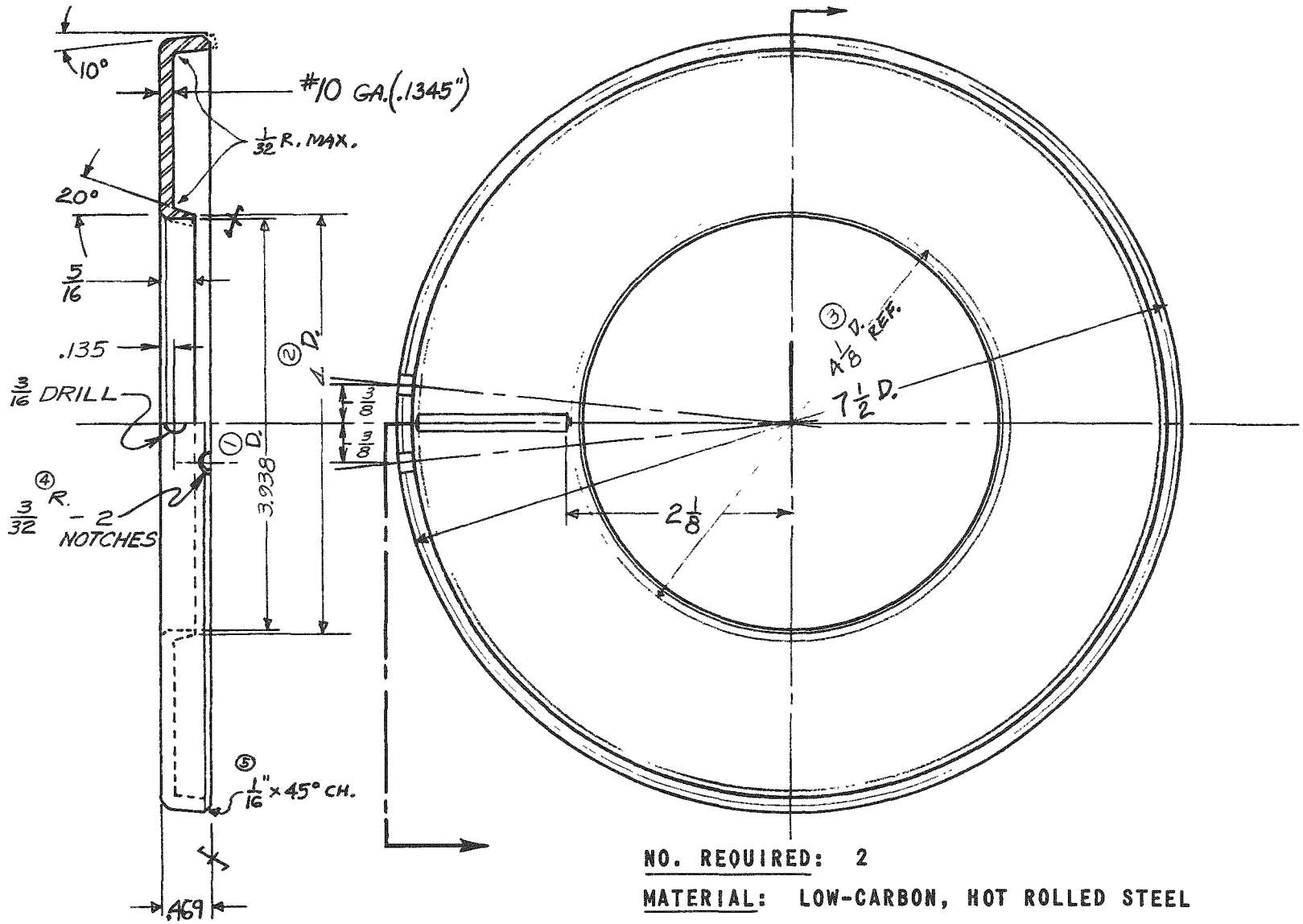

NO. REQUIRED: 2

MATERIAL: LOW-CARBON, HOT ROLLED STEEL

COIL SHELL (RE-6-19975-B)

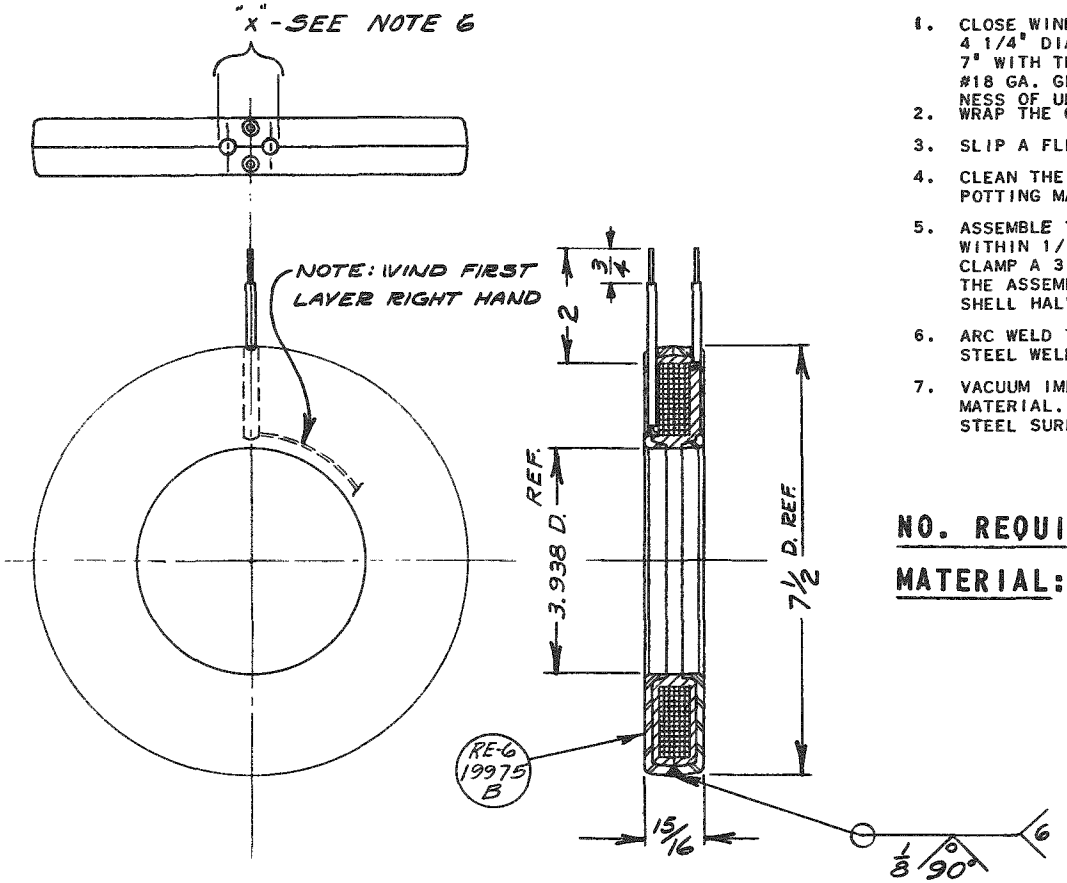

CONSTRUCTION:

1. CLOSE WIND THE COIL WITH AN ODD NUMBER OF LAYERS ON A 4 1/4" DIA. x 9/16" LONG MANDREL TO A MAXIMUM DIAMETER OF 7" WITH THE MAXIMUM NUMBER OF TURNS THAT WILL FIT. USE #18 GA. GLASS-SILICONE MAGNET WIRE. USE .005" TO .008" THICKNESS OF UNTREATED GLASS CLOTH TAPE BETWEEN LAYERS OF WIRE.
2. WRAP THE COIL 1/16" THICK WITH UNTREATED GLASS CLOTH TAPE.
3. SLIP A FLEXIBLE INSULATING SLEEVE OVER EACH WIRE END.
4. CLEAN THE STEEL PARTS TO PROVIDE A GOOD BOND WITH THE POTTING MATERIAL.
5. ASSEMBLE THE PARTS SO THAT THE TWO WIRE ENDS ARE IN LINE WITHIN 1/16" AND EXTEND THRU THE CENTER OF THE HOLES. CLAMP A 3 15/16" D. TEFLON EXPANSION PLUG IN THE BORE OF THE ASSEMBLY. MAKE SURE THAT THERE IS NO GAP BETWEEN THE SHELL HALVES.
6. ARC WELD THE SEAM WITH A 1/8" V-GROOVE WELD USING MILD STEEL WELD ROD. DO NOT WELD ALONG LENGTH "X"
7. VACUUM IMPREGNATE THE ASSEMBLY WITH THE SPECIFIED POTTING MATERIAL. LEAVE A COATING OF THE POTTING MATERIAL ON THE STEEL SURFACES (EXCEPT THE BORE).

NO. REQUIRED: 16

MATERIAL: AS NOTED

FRACTIONAL TOLERANCE $\pm \frac{1}{32}$

COIL - 15/16 in. LONG (RE-I-19976-B)

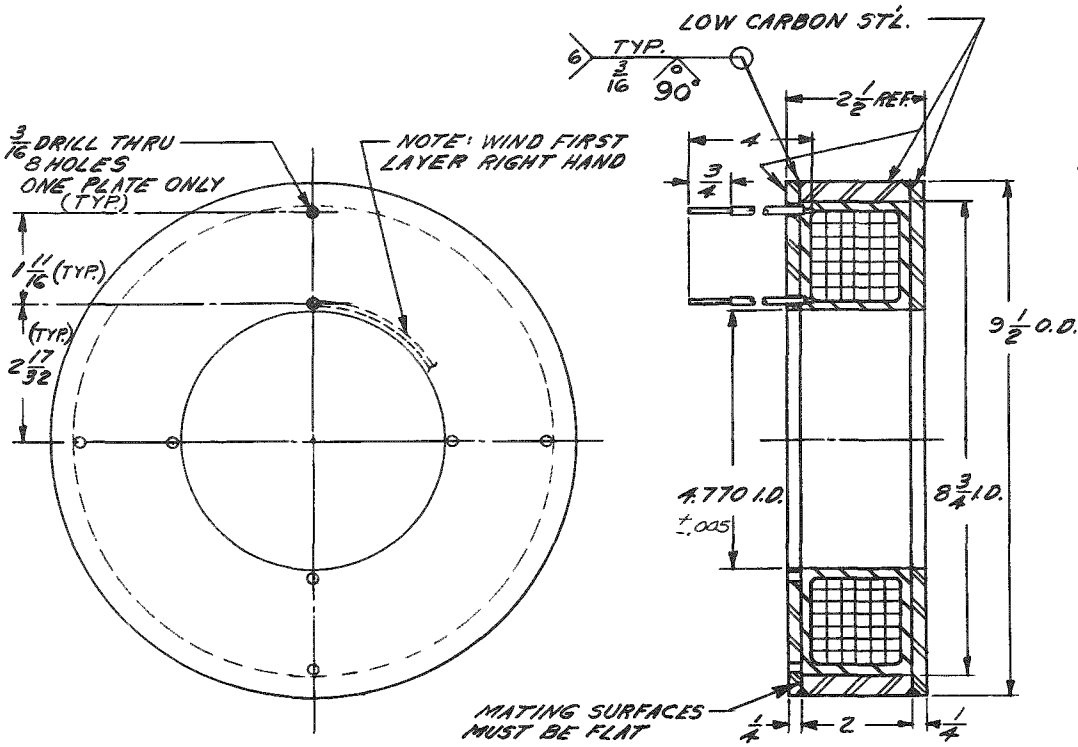

CONSTRUCTION

1. CLOSE WIND THE COIL WITH AN EVEN NUMBER OF LAYERS ON A 4 5/16 DIA. X 1 13/16 LG. MANDREL TO A MAXIMUM DIAMETER OF 8 3/16 WITH THE MAXIMUM NUMBER OF TURNS THAT WILL FIT. USE #18 GA. GLASS SILICONE MAGNET WIRE. USE .005-.008 THICKNESS OF UNTREATED GLASS CLOTH TAPE BETWEEN LAYERS OF WIRE
2. WRAP THE COIL 3/32 THICK WITH UNTREATED GLASS CLOTH TAPE.
3. SLIP A FLEXIBLE INSULATING SLEEVE OVER EACH WIRE.
4. CLEAN THE STEEL PARTS TO PROVIDE A GOOD BOND WITH THE POTTING MATERIAL.
5. ASSEMBLE THE PARTS SO THAT THE TWO WIRE ENDS EXTEND THRU THE CENTER OF THE HOLES. CLAMP A 4.770 DIA. TEFLON EXPANSION PLUG IN THE BORE OF THE ASSEMBLY. MAKE SURE THAT THERE IS NO GAP BETWEEN THE STEEL PARTS.
6. ARC WELD THE SEAMS WITH A 3/16 V-GROOVE WELD USING MILD STEEL WELD ROD.
7. VACUUM IMPREGNATE THE ASSEMBLY WITH THE SPECIFIED POTTING MATERIAL. LEAVE A COATING OF THE POTTING MATERIAL ON THE STEEL SURFACES. (EXCEPT THE BORE).

FRACTIONAL TOLERANCE ±1/32

NO. REQUIRED: 2

MATERIAL: AS NOTED

COIL - 2 1/2 in. LONG (RE-I-19977-B)

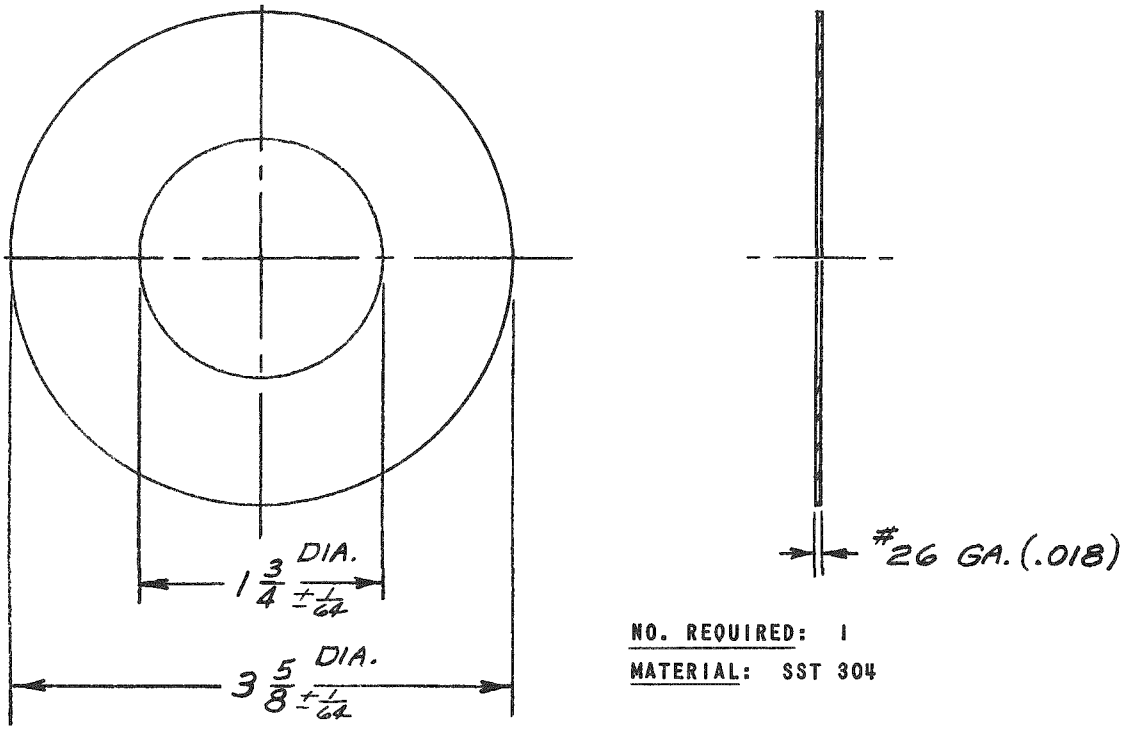

NO. REQUIRED: 1
MATERIAL: SST 304

NONMAGNETIC WASHER (RE-1-20380-A)

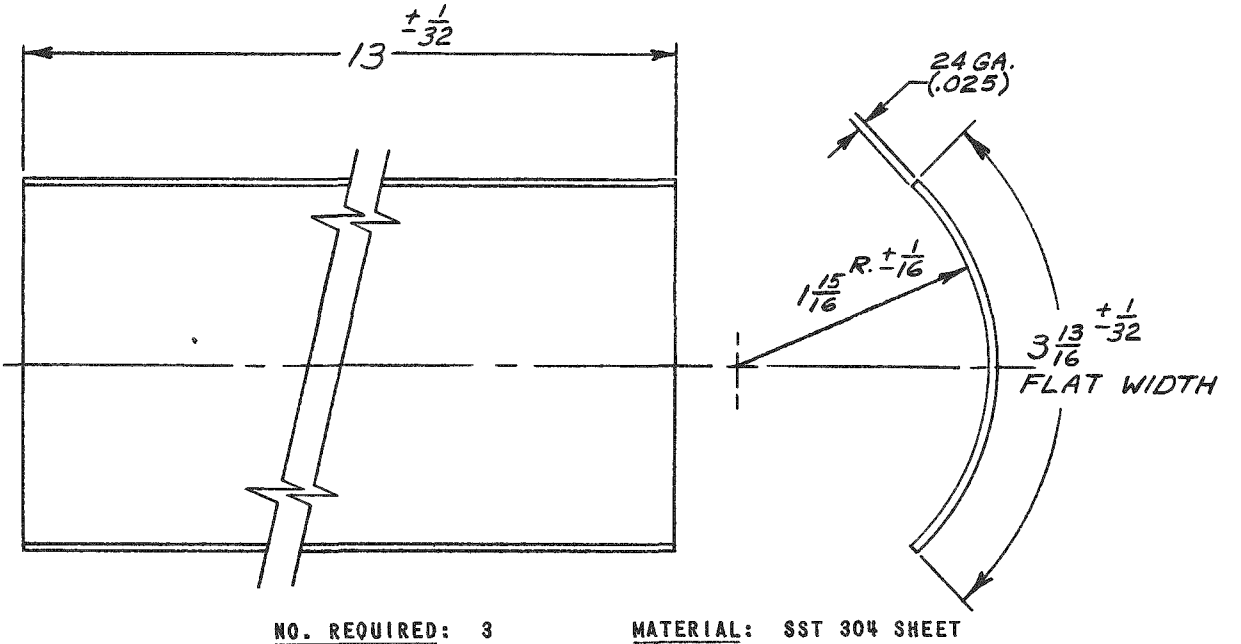

NO. REQUIRED: 3 MATERIAL: SST 304 SHEET

SLEEVE (RE-1-20381-A)

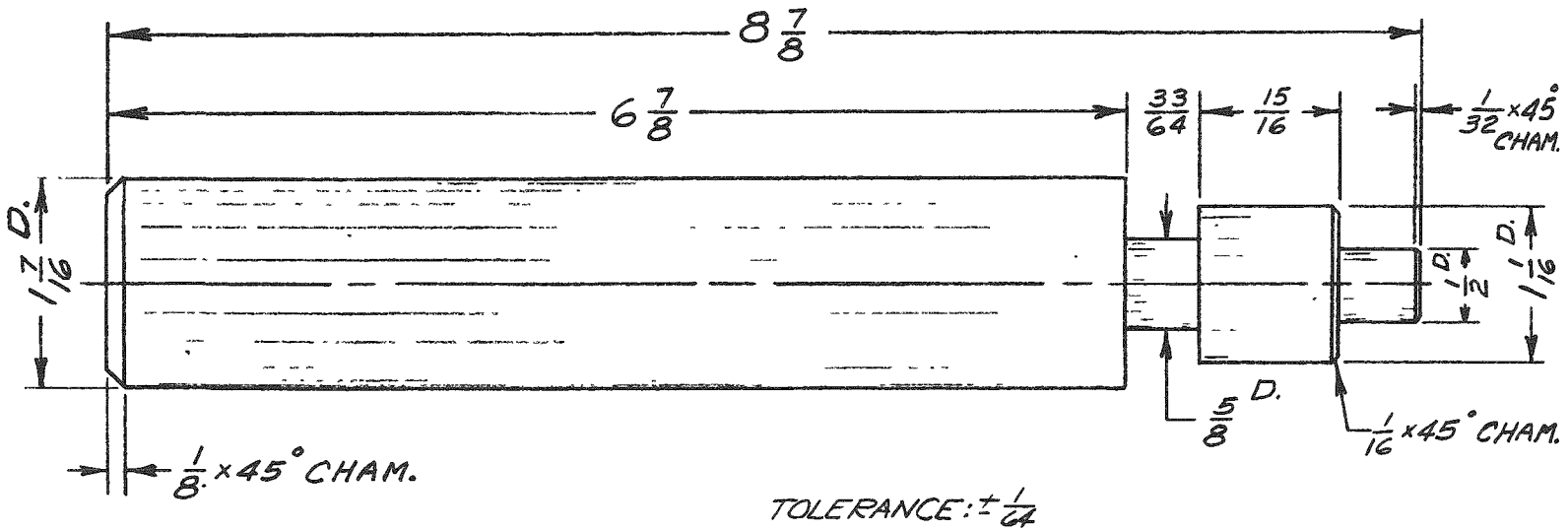

NO. REQUIRED: 1 **MATERIAL:** ARMCO 17-4 PH

POSITION INDICATOR ROD (RE-1-20383-A)

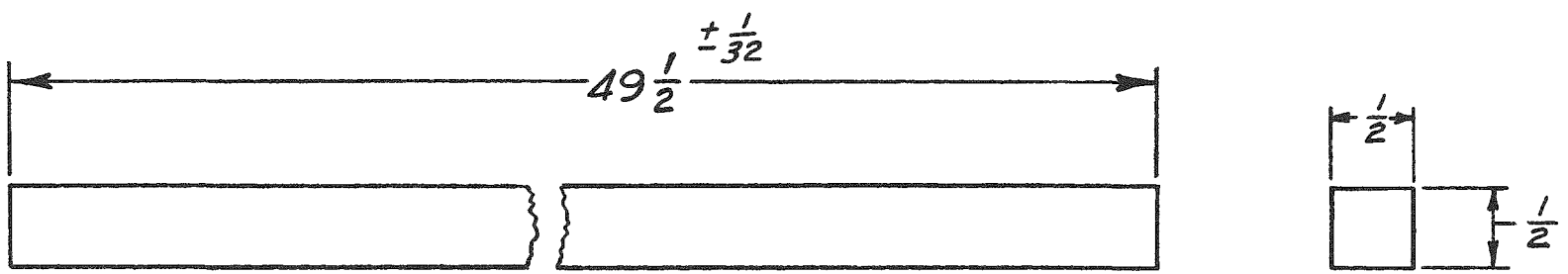

NO. REQUIRED: 1 **MATERIAL:** SST 304 (BAR STOCK)

FILLER ROD (RE-1-20384-A)

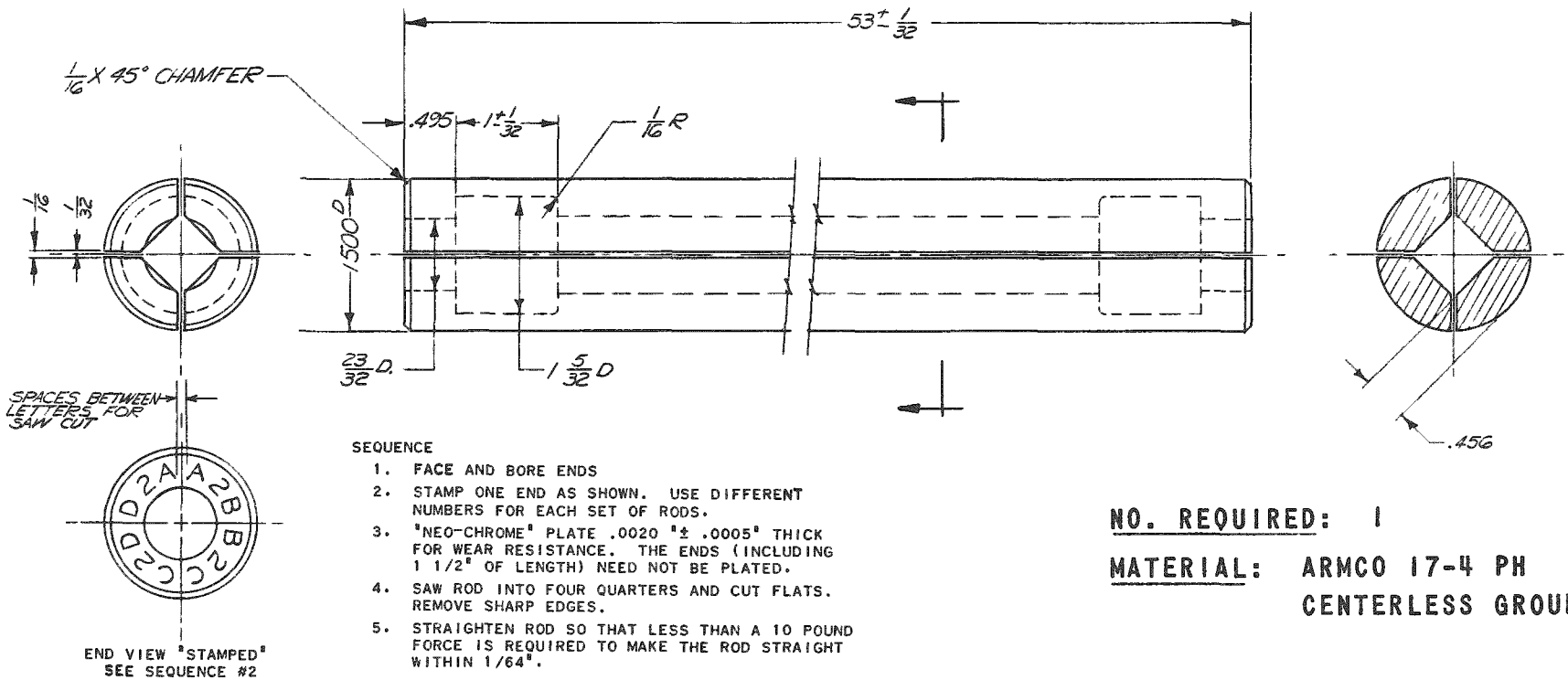

END VIEW "STAMPED"
SEE SEQUENCE #2

SEQUENCE

1. FACE AND BORE ENDS
2. STAMP ONE END AS SHOWN. USE DIFFERENT NUMBERS FOR EACH SET OF RODS.
3. "NEO-CHROME" PLATE .0020 "± .0005" THICK FOR WEAR RESISTANCE. THE ENDS (INCLUDING 1 1/2" OF LENGTH) NEED NOT BE PLATED.
4. SAW ROD INTO FOUR QUARTERS AND CUT FLATS. REMOVE SHARP EDGES.
5. STRAIGHTEN ROD SO THAT LESS THAN A 10 POUND FORCE IS REQUIRED TO MAKE THE ROD STRAIGHT WITHIN 1/64".

NO. REQUIRED: 1

MATERIAL: ARMCO 17-4 PH
CENTERLESS GROUND

DRIVE ROD (RE-1-20177-B)

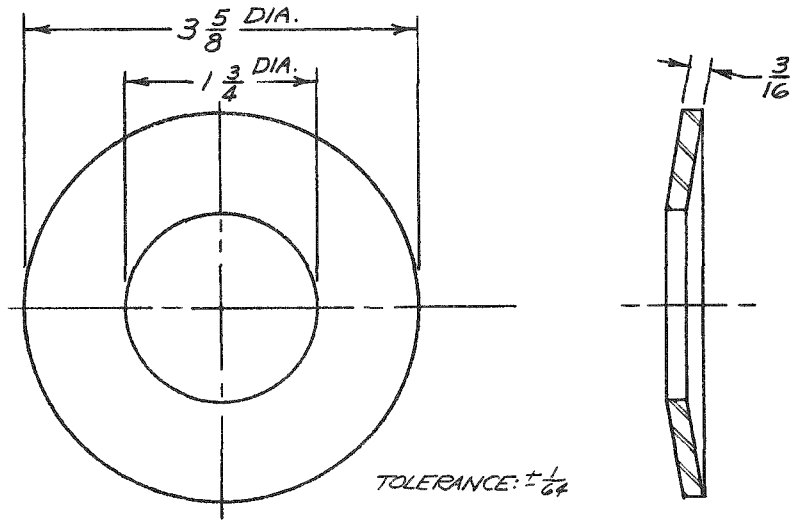

NO. REQUIRED: 2 MATERIAL: SST 405

CUSHION WASHER (RE-1-23078-A)

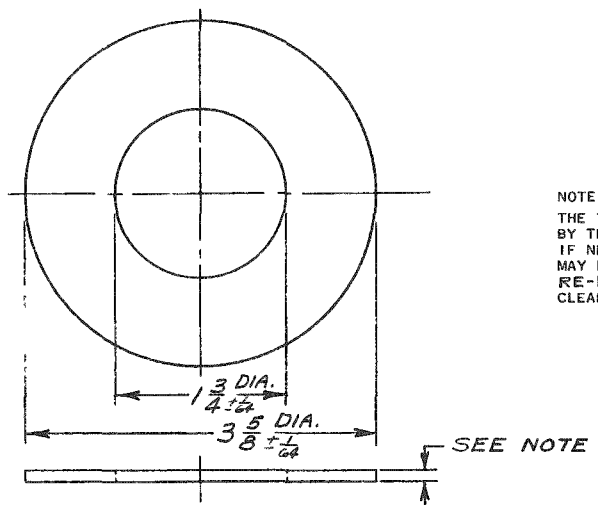

NOTE:
THE THICKNESS OF THIS SHIM IS DETERMINED BY TEST TO GIVE THE STEP LENGTH SPECIFIED. IF NECESSARY, UP TO A MAXIMUM OF .075" MAY BE REMOVED FROM EACH END OF THE ARMATURE RE-1-20400-B TO GIVE THE NECESSARY CLEARANCE.

NO. REQUIRED: 1
MATERIAL: SST 405

SHIM (RE-1-20379-A)

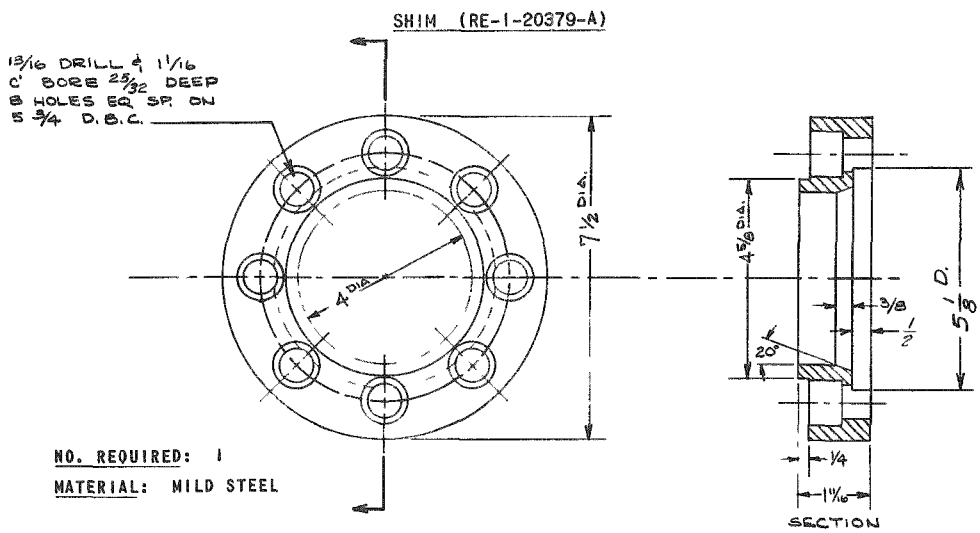

NO. REQUIRED: 1
MATERIAL: MILD STEEL

FLANGE (RE-1-20382-B)

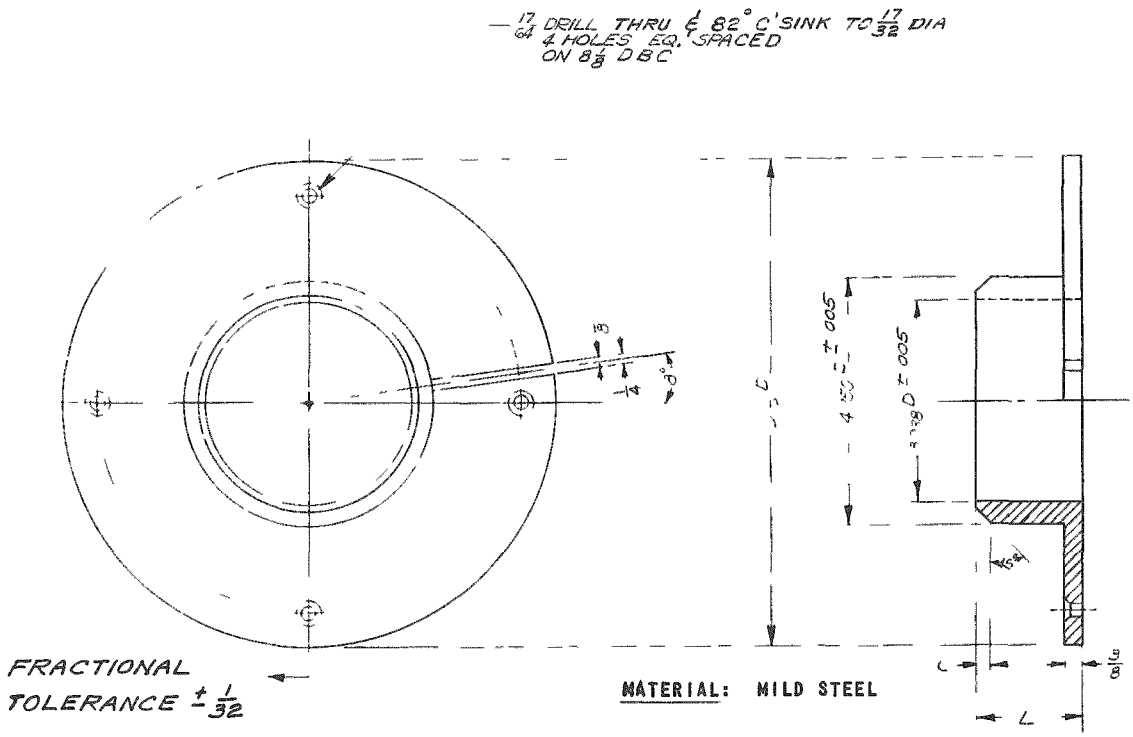

FLANGED TUBE (RE-1-20386-B)

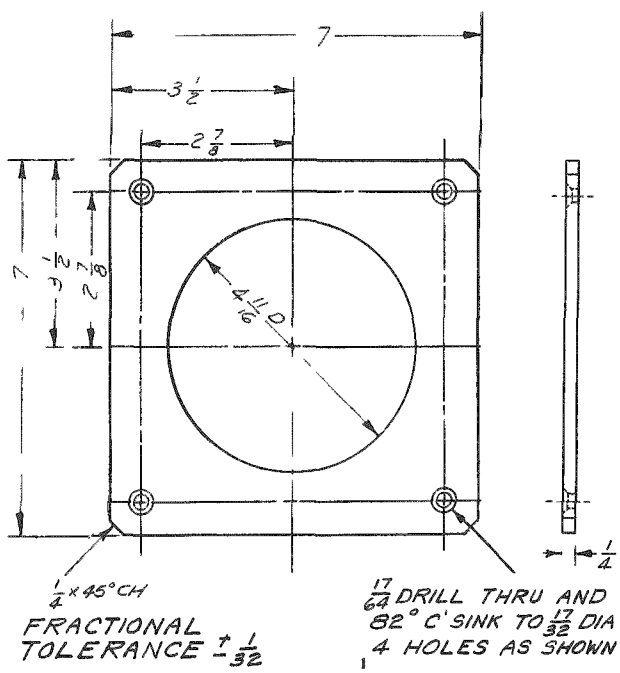

PLATE (RE-1-20385-A)

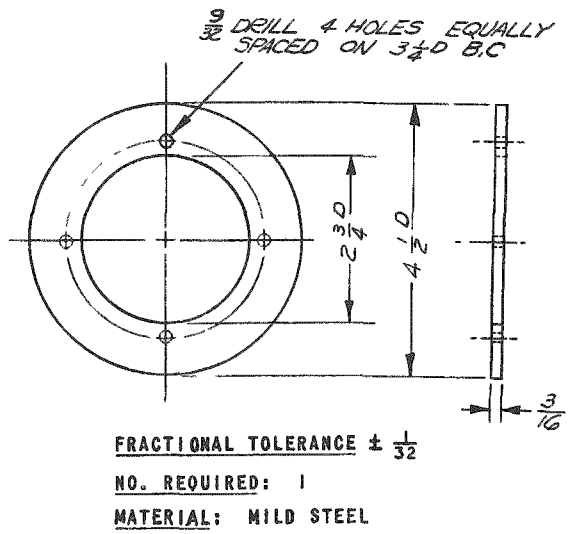

CLAMP (RE-1-20387-A)

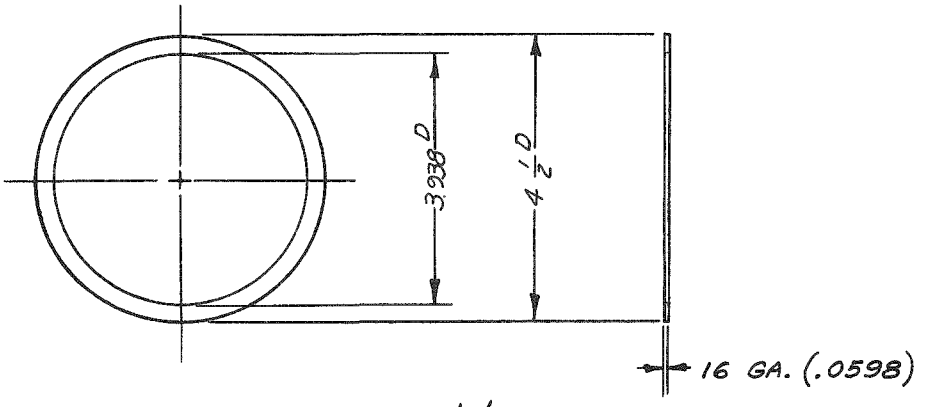

FRACTIONAL TOLERANCE $\pm\frac{1}{32}$

NO. REQUIRED: 17 MATERIAL: MILD STEEL

COIL SPACER (RE-1-20388-A)

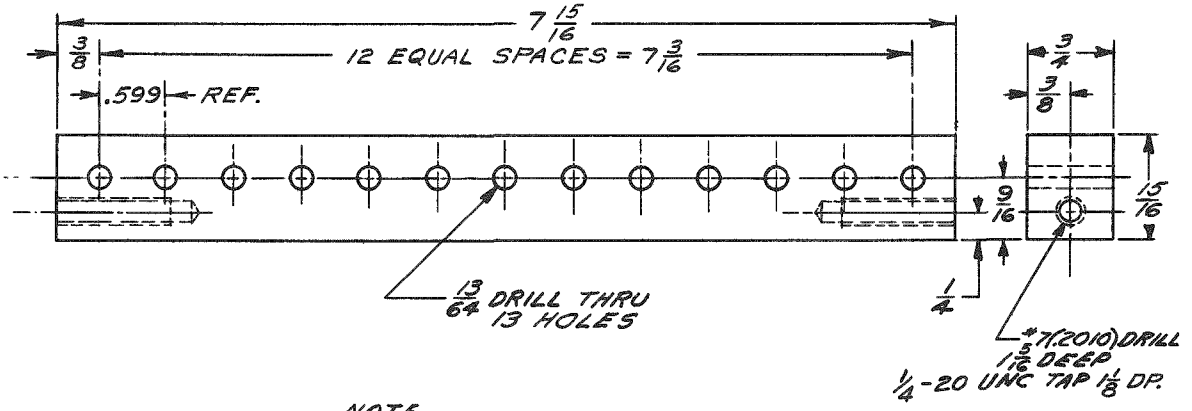

NOTE
FRACTIONAL TOLERANCE $\pm\frac{1}{32}$

NO. REQUIRED: 2 MATERIAL: TRANSITE

TERMINAL STRIP (RE-1-20389-A)

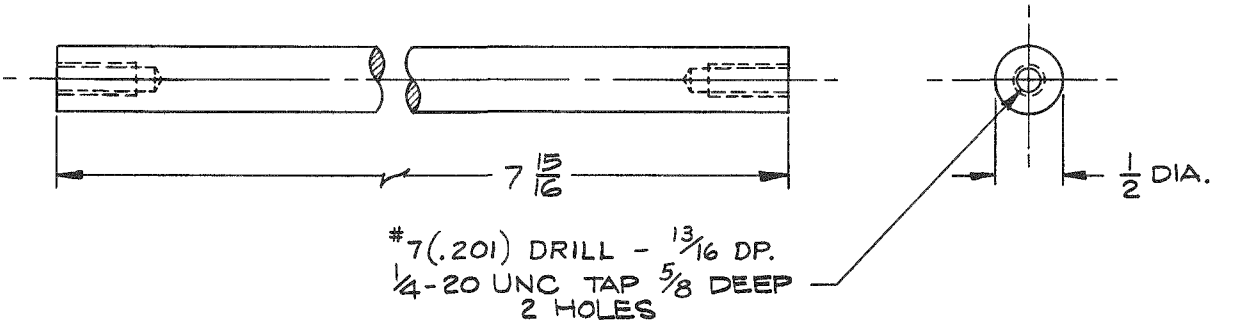

NO. REQUIRED: 6 MATERIAL: MILD STEEL

FRACTIONAL TOLERANCE $\pm\frac{1}{32}$

TIE ROD (RE-1-20390-A)

APPENDIX C

MAGNETIC CIRCUIT CALCULATIONS

The following procedure is used for determining the optimum design, the capacity, F, of the jack and the required ampere turns, E_c, of the coil.

The flux paths are divided into parts, each part represented by a resistor in an electrical diagram, and the system is calculated using Ohm's Law and Kirchhoff's Law.

To calculate the leakage flux, the over-all leakage flux path is broken down into several components, each component being the path between the various parallel and intersecting surfaces of the two poles. The length of the path for intersecting surfaces is assumed to be that of an arc one-fourth the distance from the intersection to the boundary of the smaller surface. "One-fourth" is an approximation since the exact length depends upon the flux paths in the iron which are difficult to determine. The area of the path is assumed to be the area of the smaller surface.

The reluctance (R) in a void or any nonmagnetic material is given by:

$$R = 313 \frac{L}{A} \quad ,$$

where

L = length of path, in.

A = area of path, in.^{2}

Thus, for circular areas, such as those in the magnetic jack:

$$R = 0.435 \frac{(180-C)}{D} \quad ,$$

where

C = included angle of the intersecting surfaces, degrees

D = mean diameter of smaller surface, in.

The flux leakage across the coil space is more concentrated near the inner end; therefore, the area of this path is assumed to be the area of the inner half of the coil space side.

Work Sheets No. 1 to No. 4, inclusive, are for various types of internal magnetic circuits. The appropriate circuit is selected and used to start the calculations which begin by assuming the working flux density (B_p) and the dimensions.

Work Sheet No. 5 is used to calculate the external magnetic circuit, starting with the values of E_{S3}, E_G, and I_G obtained from Work Sheet No. 1, No. 2, No. 3, or No. 4.

Completion of Work Sheet No. 5 gives the value of E_c which is used in Work Sheet No. 6 to calculate the coil.

NOMENCLATURE

B = flux density, kilolines per in.^{2}

H = field intensity, ampere turns per inch

E = magnetomotive force, ampere turns

I = flux, kilolines

R = reluctance

A = area, in^2.

L = length, in.

W = width, in.

F = force, lb

C = angle, degrees.

D = diameter, in.

WORK SHEET NO. 1

INTERNAL MAGNET CIRCUIT - GRIP MAGNET

CONFORMING - TYPE ROD

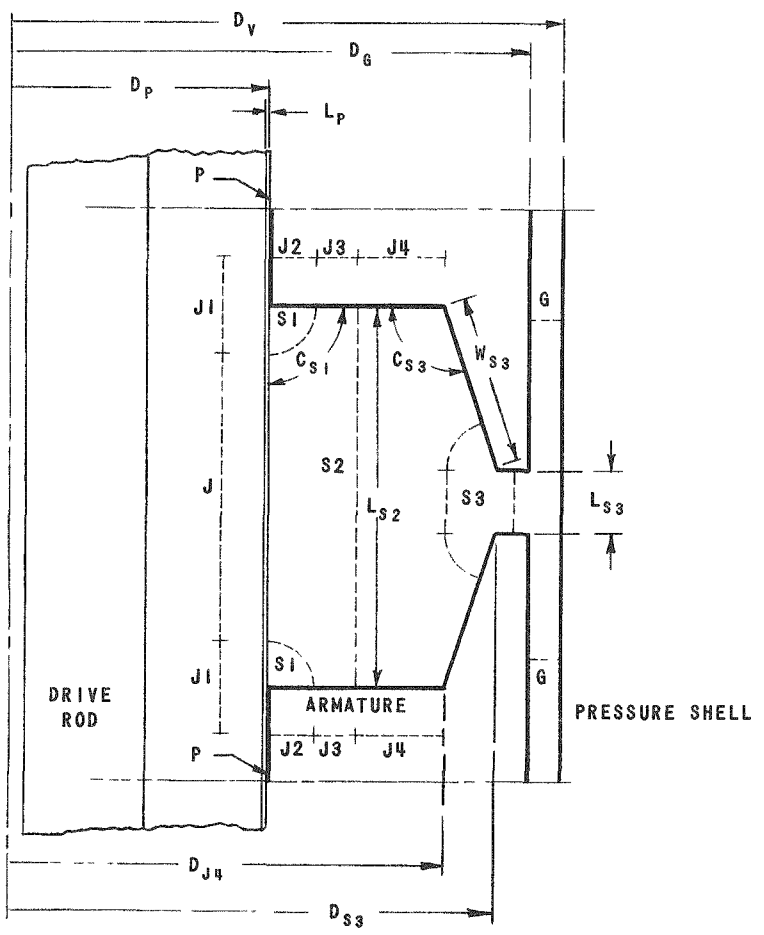

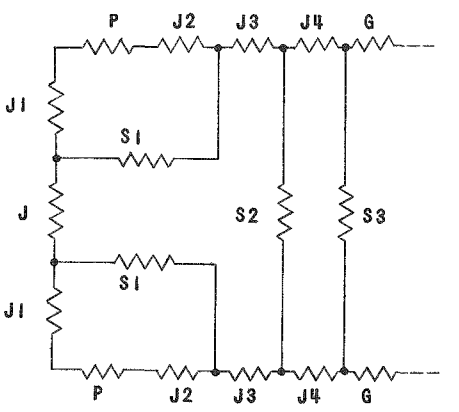

B_P = (Assume) _____

A_J = Cross Sectional Area of Drive Rod _____

U = Area Factor (usually 0.85) _____

A_P = UA_J _____

N = No. of Magnetic Circuits _____

f = Coefficient of Friction _____

F = $B_P^2 A_P Nf/36.05$ _____

I_P = $B_P A_P$ _____

L_P = Chrome plate (usually 0.002) _____

E_P = $313 L_P B_P$ _____

D_P = ID of armature _____

L_{S2} = Slot Length _____

L_{J2} = $L_{S2}/8$ _____

W_P = $A_P/\pi D_P$ _____

A_{J2} = $\pi (D_P + L_{J2}) W_P$ _____

B_{J2} = I_P/A_{J2} _____

H_{J2} = (see Fig. 16) _____

E_{J2} = $H_{J2} L_{J2}$ _____

B_{J1} = I_P/A_J _____

H_{J1} = (See Fig. 16) _____

L_{J1} = $L_{J2} + (W_P/2)$ _____

E_{J1} = $H_{J1} L_{J1}$ _____

E_{S1} = $E_P + E_{J2} + E_{J1}$ _____

C_{S1} = Slot angle _____

R_{S1} = $0.435 (180 - C_{S1})/D_P$ _____

I_{S1} = E_{S1}/R_{S1} _____

I_J = $I_P + I_{S1}$ _____

B_J = I_J/A_J _____

H_J = (See Fig. 16) _____

E_J = $H_J L_J$ _____

D_{J4} = OD of Slot _____

L_{J3} = $(D_{J4} - D_P - 4L_{J2})/4$ _____

A_{J3} = $\pi (D_P + 2L_{J2} + L_{J3}) W_P$ _____

B_{J3} = I_J/A_{J3} _____

H_{J3} = (See Fig. 16) _____

E_{J3} = $H_{J3} L_{J3}$ _____

E_{S2} = $E_J + 2E_{S1} + 2E_{J3}$ _____

A_{S2} = $\pi (D_{J4} - D_P)/4$ _____

I_{S2} = $E_{S2} A_{S2}/313 L_{S2}$ _____

I_{J4} = $I_J + I_{S2}$ _____

L_{J4} = $(D_{J4} - D_P)/4$ _____

A_{J4} = $\pi (D_{J4} - L_{J4}) W_P$ _____

B_{J4} = I_{J4}/A_{J4} _____

H_{J4} = (See Fig. 16) _____

E_{J4} = $H_{J4} L_{J4}$ _____

E_{S3} = $E_{S2} + 2E_{J4}$ _____

C_{S3} = Flange angle _____

D_{S3} = ID of flange _____

L_{S3} = Flange gap length _____

W_{S3} = Flange width _____

I_{S3} = E_{S3}/R_{S3} _____

I_G = $I_{J4} + I_{S3}$ _____

D_G = OD of armature _____

A_G = $\pi D_G (L_{S2} + 2W_P - L_{S3})/2$ _____

D_V = ID of pressure shell _____

E_G = $156.5 I_G (D_V - D_G)/A_G$ _____

L_J = $L_{S2} - 2L_{J2}$ _____

$$R_{S3} = \frac{\left(199 L_{S3}/W_{S3}\right) + 1.74\left(180 - C_{S3}\right)}{D_{S3} + D_{J4} + \left(\frac{1}{2W_{S3}} + \frac{180 - C_{S3}}{299 L_{S3}}\right)\left(D_G^2 - D_{S3}^2\right)}$$ _____

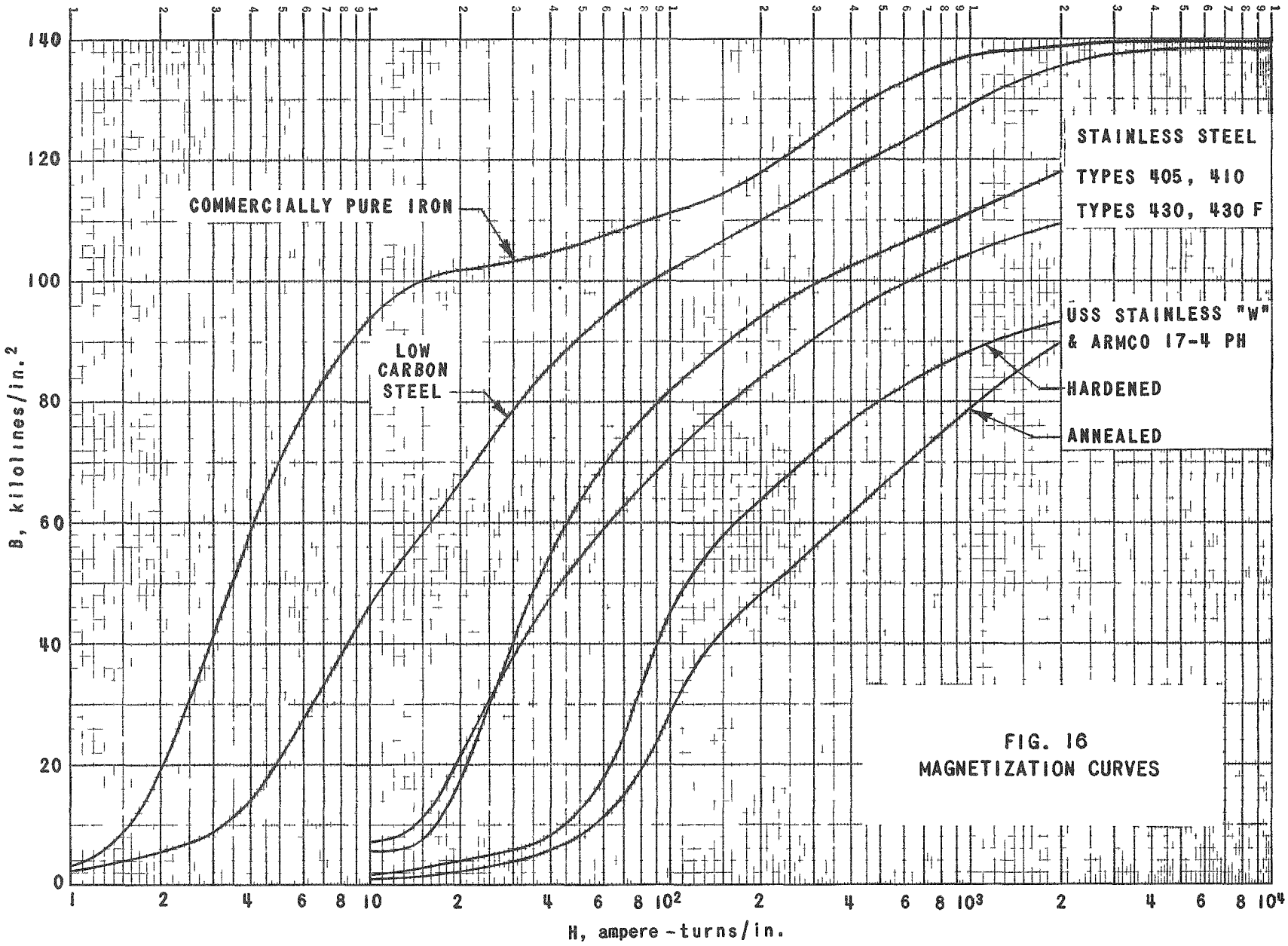

FIG. 16
MAGNETIZATION CURVES

WORK SHEET NO. 2

INTERNAL MAGNETIC CIRCUIT - GRIP MAGNET

SIX ROUND ROD-TYPE DRIVE RODS

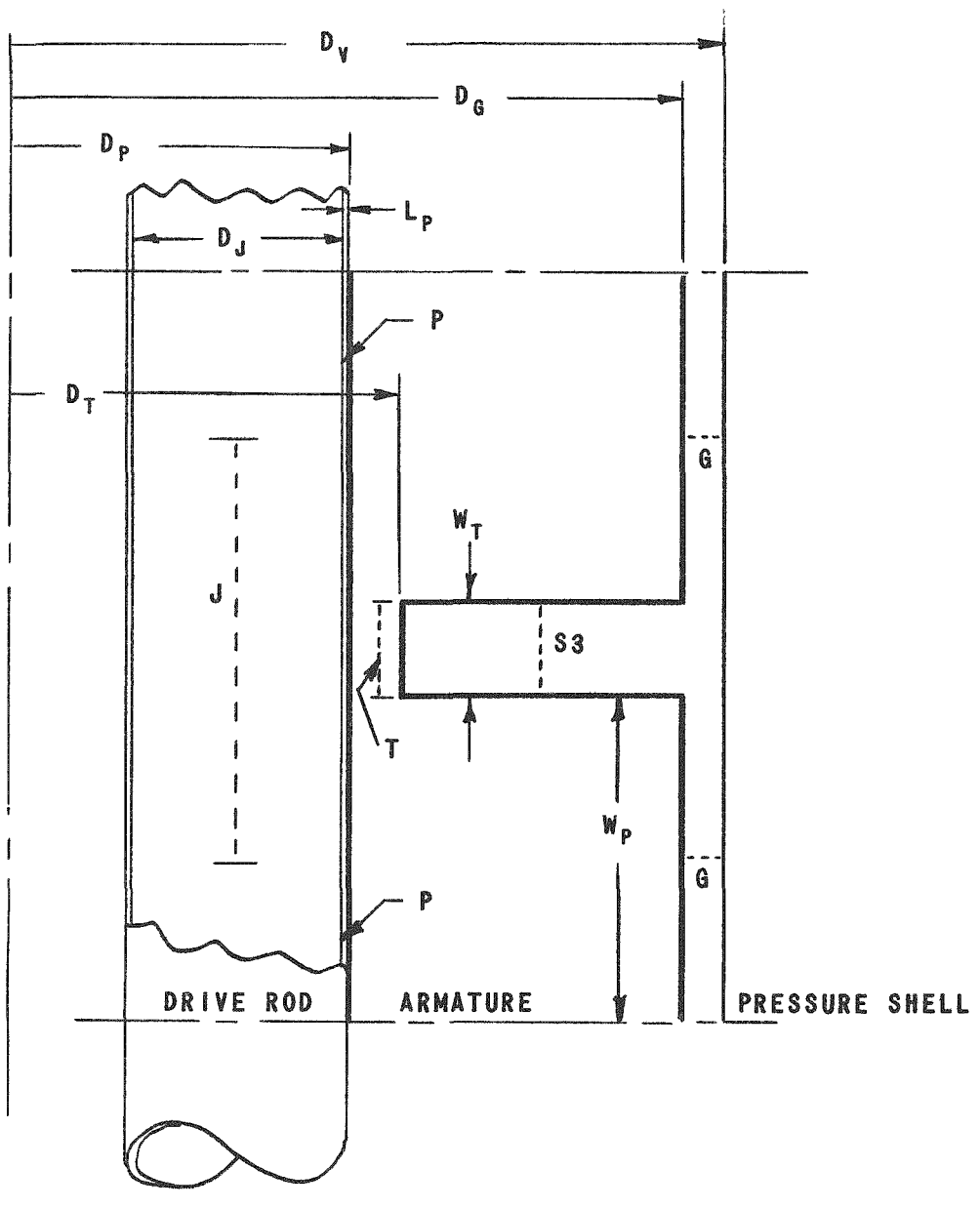

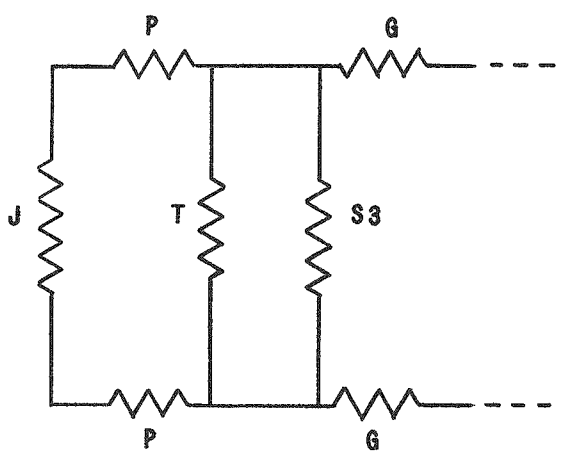

B_P	=	Assume	_____	W_T	=	Slot Length	_____
D_J	=	Rod Diameter	_____	L_J	=	$W_P + W_T$	_____
A_J	=	$4.72\ D_J^2$	_____	E_J	=	$H_J L_J$	_____
U	=	Area Factor (usually 2.5)	_____	E_{S3}	=	$2E_P + E_J$	_____
A_P	=	UA_J	_____	M	=	Rod Clearance (usually $D_J/8$)	_____
N	=	No. of Magnetic Circuits	_____	D_P	=	$3D_J + M$	_____
f	=	Coefficient of friction	_____	D_T	=	ID of Slot	_____
F	=	$B_P^2\ A_P\ Nf/36.05$	_____	A_T	=	$\pi(D_T^2 - D_P^2)/4$	_____
I_P	=	$B_P\ A_P$	_____	B_T	=	Maximum B	_____
L_P	=	Chrome plate thickness	_____	I_T	=	$B_T\ A_T$	_____
K	=	Gap Factor (usually 0.0075)	_____	D_G	=	OD of Armature	_____
R_P	=	$313\ (L_P + KD_J)/A_P$	_____	A_{S3}	=	$\pi(D_G^2 - D_T^2)/4$	_____
E_P	=	$I_P\ R_P$	_____	I_{S3}	=	$E_{S3}\ A_{S3}/313\ W_T$	_____
B_J	=	I_P/A_J	_____	I_G	=	$I_P + I_T + I_{S3}$	_____
H_J	=	(See Fig. 16)	_____	A_G	=	$\pi D_G\ W_P$	_____
W_P	=	Length of Armature Tooth	_____	D_V	=	ID of Pressure Shell	_____
				E_G	=	$156.5\ (I_G)(D_V - D_G)/A_G$	_____

WORK SHEET NO. 3

INTERNAL MAGNETIC CIRCUIT - HOLD MAGNET (DIRECT TYPE) *

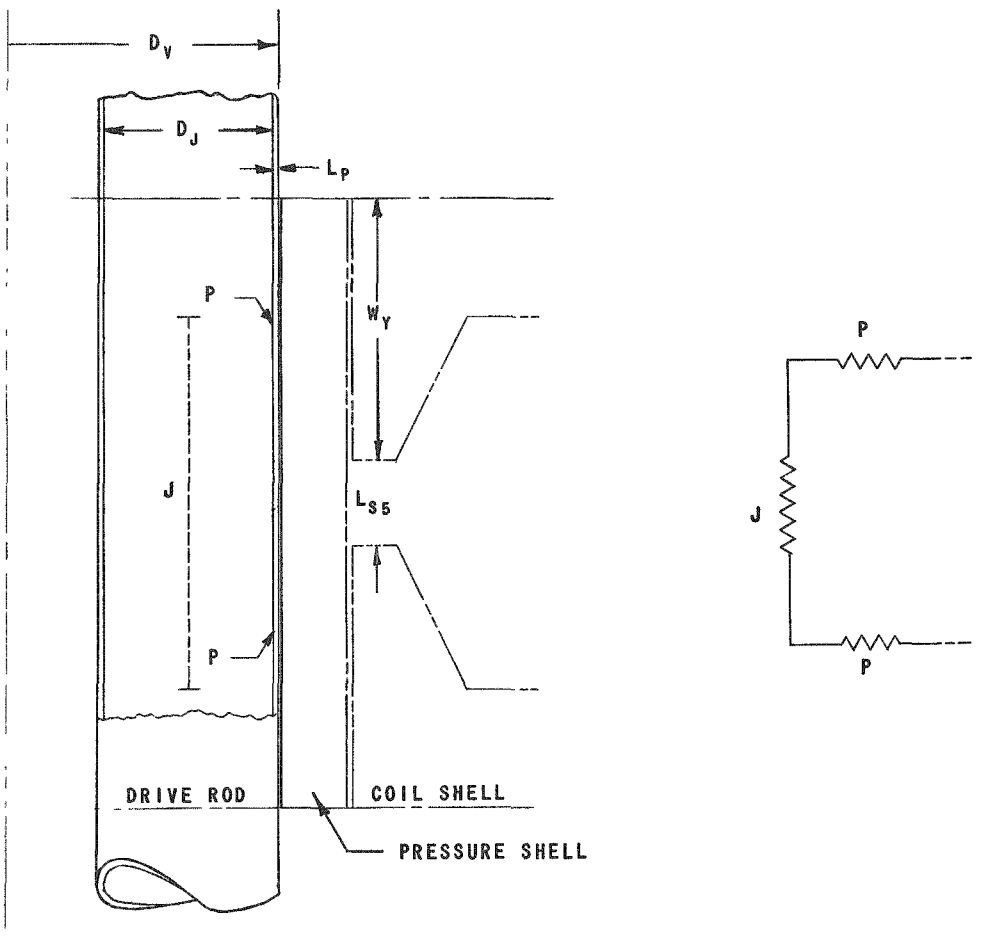

(A) CONFORMING-TYPE DRIVE ROD

B_P = (Assume) _____

A_J = Cross-sectional are of drive rod _____

U = Area factor (usually 0.85) _____

A_P = UA_J _____

N = No. of magnetic circuits _____

f = Coefficient of friction _____

F = $B_P^2 A_P Nf/36.05$ _____

I_P = $I_G = B_P A_P$ _____

L_P = Chrome plate (usually 0.002) _____

E_P = $E_G = 313 L_P B_P$ _____

D_V = ID of Hold Tube _____

L_{S5} = Length of gap of coil shell _____

W_Y = $A_P/\pi D_V$ _____

B_J = I_P/A_J _____

H_J = (See Fig. 16) _____

L_J = $L_{S5} + W_Y$ _____

E_{S3} = $E_J = H_J L_J$ _____

(B) 6-ROUND ROD-TYPE DRIVE ROD

B_P = (Assume) _____

D_J = Rod Diameter _____

A_J = $4.72 D_J^2$ _____

U = Area factor (usually 2.5) _____

A_P = UA_J _____

N = No. of magnetic circuits _____

f = Coefficient of friction _____

F = $B_P^2 A_P Nf/36.05$ _____

I_P = $I_G = B_P A_P$ _____

L_P = Chrome plate thickness _____

K = Gap factor (usually 0.0075) _____

R_P = $313 (L_P + KD_J)/A_P$ _____

E_P = $E_G = I_P R_P$ _____

B_J = I_P/A_J _____

H_J = (See Fig. 16) _____

L_{S5} = Length of gap of coil shell _____

W_Y = Length of coil shoe _____

L_J = $L_{S5} + W_Y$ _____

E_{S3} = $E_J = H_J L_J$ _____

M = Rod clearance (usually $D_J/8$) _____

D_V = $3D_J + M$ _____

*Jack Unit No. 24 has the direct-type hold magnet. The hold magnet for Unit No. 27 is calculated the same as the grip magnet.

WORK SHEET NO. 4

INTERNAL MAGNETIC CIRCUIT - LIFT MAGNET

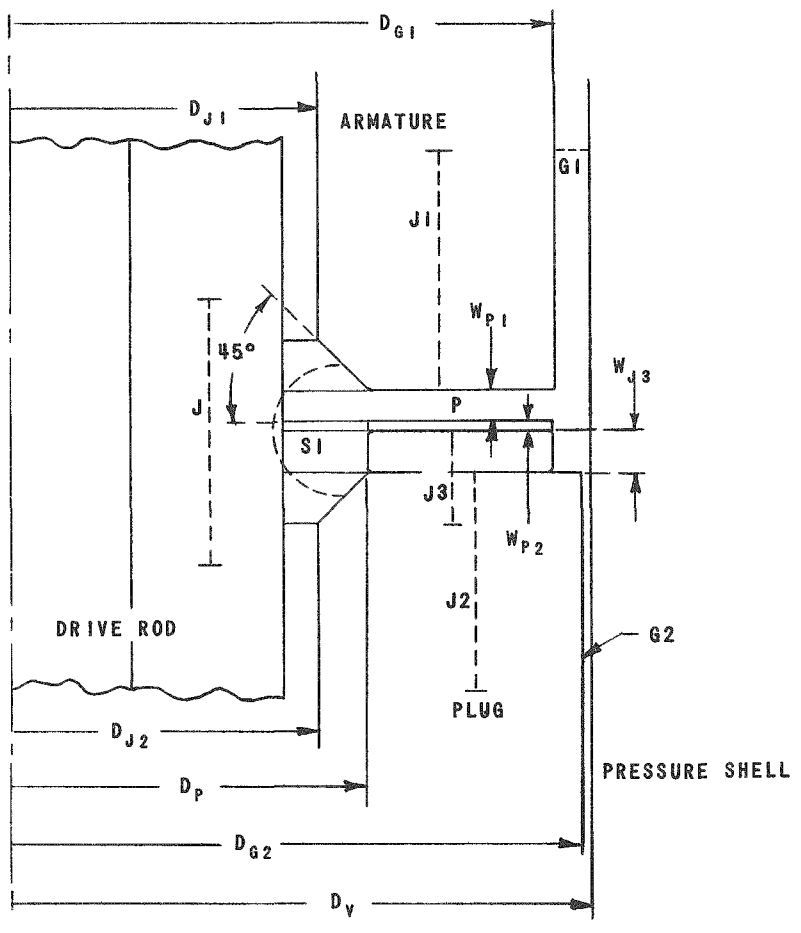

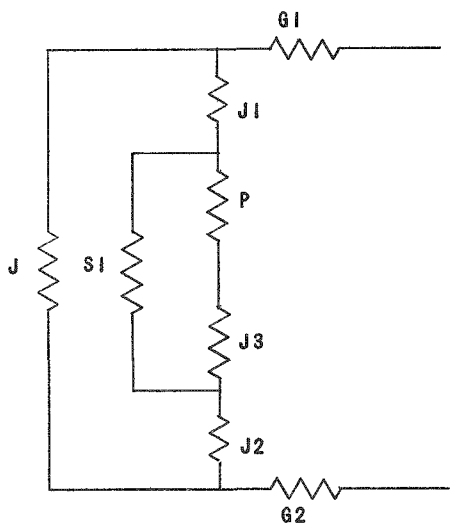

B_P	=	(Assume)	I_{S1}	=	$E_{S1} A_{S1}/313L_{S1}$
D_{G1}	=	OD of armature	I_{J1}	=	$I_P + I_{S1}$
D_P	=	ID of armature and of cushion	D_{J1}	=	ID of end of armature
A_P	=	$\pi (D_{G1}^2 - D_P^2)/4$	A_{J1}	=	$\pi (D_{G1}^2 - D_{J1}^2)/4$
F	=	$B_P^2 A_P/12.1$	B_{J1}	=	I_{J1}/A_{J1}
B_J	=	Maximum B	H_{J1}	=	(See Fig. 16)
A_J	=	Cross-sectional area of drive rod	L_{J1}	=	1/2 distance from armature face to end of coil shell
I_J	=	$B_J A_J$	E_{J1}	=	$H_{J1} L_{J1}$
I_P	=	$B_P A_P$	D_{G2}	=	OD of plug
W_{P1}	=	Step length	A_{J2}	=	$\pi (D_{G2}^2 - D_{J2}^2)/4$
W_{P2}	=	Thickness of non-magnetic washer	B_{J2}	=	I_{J1}/A_{J2}
E_P	=	$313 L_P I_P/A_P$	H_{J2}	=	(See Fig. 16)
W_{J3}	=	Thickness of cushion washer	L_{J2}	=	1/2 distance from plug face to end of coil shell
D_{J2}	=	ID of plug	E_{J2}	=	$H_{J2} L_{J2}$
L_{J3}	=	$W_{J3} + (D_P - D_{J2})/2$	E_{S3}	=	$E_J = E_{S1} + E_{J1} + E_{J2}$
B_{J3}	=	B_P	I_G	=	$I_{J1} + I_J$
H_{J3}	=	(See Fig. 16)	D_V	=	ID of pressure shell
E_{J3}	=	$H_{J3} L_{J3}$	A_{G1}	=	$2\pi D_{G1} L_{J1}$
E_{S1}	=	$E_P + E_{J3}$	E_{G1}	=	$156.5(I_G)(D_V - D_{G1})/A_{G1}$
A_{S1}	=	$(\pi D_P^2/4) - A_J$	A_{G2}	=	$2\pi D_{G2} L_{J2}$
L_{S1}	=	$\pi (L_P + L_{J3})/2$	E_{G2}	=	$156.5(I_G)(D_V - D_{G2})/A_{G2}$
L_P	=	$W_{P1} + W_{P2}$	E_G	=	$(E_{G1} + E_{G2})/2$

WORK SHEET NO. 5

EXTERNAL MAGNETIC CIRCUIT

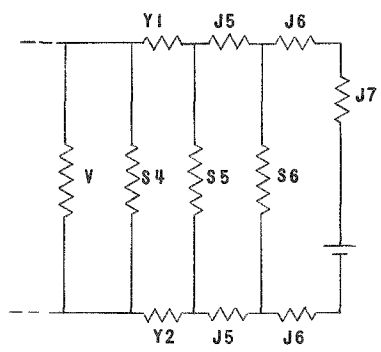

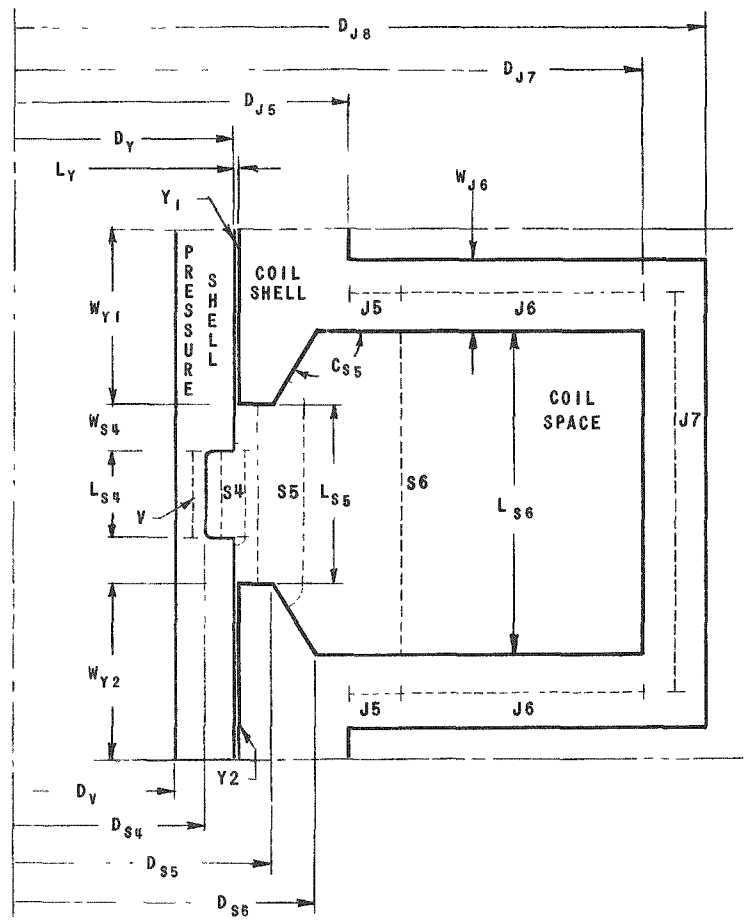

E_{S3}	Work Sheets	_____
E_G	No. 1-4 as	_____
I_G	applicable	_____
E_V	$= E_{S3} + 2E_G$	_____
B_V	= Maximum B	_____
D_{S4}	= ID of Groove	_____
D_V	= ID of pressure shell	_____
A_V	$= \pi (D_{S4}^2 - D_V^2)/4$	_____
L_{S4}	= Groove length	_____
W_{S4}	= Distance from groove to coil shell	_____
D_Y	= OD of pressure shell	_____
I_{S4}	$= E_V/R_{S4}$	_____
I_Y	$= I_G + I_V + I_{S4}$	_____
L_Y	= Coil shell radial clearance	_____
W_{Y1}	= Length of coil shell shoe (armature end)	_____
A_{Y1}	$= \pi D_Y W_{Y1}$	_____
E_{Y1}	$= 313 I_Y L_Y/A_{Y1}$	_____
W_{Y2}	= Length of coil shell shoe (plug end)	_____
A_{Y2}	$= \pi D_Y W_{Y2}$	_____
E_{Y2}	$= 313 I_Y L_Y/A_{Y2}$	_____
E_{S5}	$= E_V + E_{Y1} + E_{Y2}$	_____
C_{S5}	= Coil Shell inner flange angle	_____
D_{S5}	= Coil shell inner flange diameter	_____
L_{S5}	= Coil shell inner flange gap length	_____
W_{S5}	= Coil shell inner flange width	_____
D_{S6}	= ID of coil space	_____

$$R_{S4} = \frac{(99.6 L_{S4}/W_{S4}) + 78.4}{D_Y + \left(\frac{1}{4W_{S4}} + \frac{1}{5.1 L_{S4}}\right)(D_Y^2 - D_{S4}^2)} \quad ____$$

$$R_{S5} \quad \frac{(199 L_{S5}/W_{S5}) + 1.74 (180 - C_{S5})}{D_{S5} + D_{S6} + \left(\frac{1}{2W_{S5}} + \frac{180 - C_{S5}}{229 L_{S5}}\right)(D_{S5}^2 - D_Y^2)} \quad ____$$

I_{S5}	$= E_{S5}/R_{S5}$	_____
I_{J5}	$= I_Y + I_{S5}$	_____
D_{J5}	= Coil shell diameter at section of min. area	_____
D_{J7}	= OD of coil space	_____
L_{J6}	$= 3(D_{J7} - D_{S6})/8$	_____
L_{J5}	$= (D_{J7} - D_{J5} - 2L_{J6})/2$	_____
W_{J6}	= Coil shell side thickness	_____
A_{J5}	$= \pi (D_{J5} + L_{J5}) W_{J6}$	_____
B_{J5}	$= I_{J5}/A_{J5}$	_____
H_{J5}	= (See Fig. 16)	_____
E_{J5}	$= H_{J5} L_{J5}$	_____
E_{S6}	$= E_{S5} + 2E_{J5}$	_____
A_{S6}	$= \pi\left[(D_{J7} + D_{S6})^2 - (2D_{S6})^2\right]/16$	_____
L_{S6}	= coil space length	_____
I_{S6}	$= E_{S6} A_{S6}/313 L_{S6}$	_____
I_{J6}	$= I_{J5} + I_{S6}$	_____
A_{J6}	$= \pi (D_{J7} - L_{J6}) W_{J6}$	_____
B_{J6}	$= I_{J6}/A_{J6}$	_____
H_{J6}	= (See Fig. 16)	_____
E_{J6}	$= H_{J6} L_{J6}$	_____
A_{J7}	$= \pi (D_{J8}^2 - D_{J7}^2)/4$	_____
B_{J7}	$= I_{J6}/A_{J7}$	_____
H_{J7}	= (See Fig. 16)	_____
L_{J7}	$= L_{S6} + W_{J6}$	_____
E_{J7}	$= H_{J7} L_{J7}$	_____
E_c	$= E_{S6} + 2E_{J6} + E_{J7}$	_____
D_{J8}	= OD of coil shell	
I_V	$= B_V A_V$	_____

WORK SHEET NO. 6

COIL CALCULATIONS

Ampere Turns	E_c		_____
Wire size	—		_____
Wire OD, in.	D_W		_____
Mean diameter, in.	D_c		_____
Thickness, in.	T_c		_____
Length, in.	L_c		_____
Temperature, F	—		_____
Ohms/ft	M_c		_____
Turns	N_T	$T_c L_c / D_W^2$	_____
Feet/turn	ℓ_N	$D_c \pi / 12$	_____
Feet of wire	ℓ_W	$\ell_N N_T$	_____
Ohms	r	$\ell_W M_c$	_____
Amperes	i	E_c / N_T	_____
Watts	w	$i^2 r$	_____
Cooling Surface, in.^{2}	A_S		_____
Watts/in.^{2}	—	w/A_S	_____
Volts	—	ir	_____

Simplified Calculations

The effect of leakage and iron reluctance is relatively small for circuits that are well below the saturation point, in which case the following formulas may be used.

NOMENCLATURE

E_{CA} = Approximate ampere turns of the coil

F_H = Grip or hold capacity, lb

F_L = Lift capacity, lb

B_P = Assumed working flux density, kilolines/in.^{2}

A_P = Working area, in^2

N = Number of magnetic circuits in tandem

f = Coefficient of friction

B_V = Maximum flux density of pressure shell material

B_T = Maximum flux density of armature material

B_J = Maximum flux density of drive rod material

A_J = Cross-sectional area of drive rod, in.^{2}

A_G = Armature outside area, in.^{2}

A_{G1} = Armature end effective area, in.^{2}

A_{G2} = Plug effective area, in.^{2}

A_Y = Coil shell shoe area, in.^{2}

A_{Y1} = Lift coil shell shoe area (armature end), in.^{2}

A_{Y2} = Lift coil shell shoe area (plug end), in.^{2}

A_V = Area of pressure shell at groove, in.^{2}

A_T = Area of armature at bottom of slot, in.^{2}

L_G = Radial gap length of armature, in.

L_{G1} = Radial gap length of end of armature, in.

L_{G2} = Radial gap length of plug, in.

L_Y = Radial gap length of coil shell shoe, in.

L_P = Working gap length, in.

K = Rod gap factor (usually 0.0075 for 6 round rod type and 0 for conforming type).

D_J = Rod diameter, in.

Grip or Hold Magnet:

$$F_H = \frac{B_P^2 \; A_P \; Nf}{36.05}$$

Lift Magnet:

$$F_L = \frac{B_P^2 \; A_P}{72.1}$$

Grip Magnet with conforming-type drive rod:

$$E_{CA} = 626 \; B_P \left(\frac{A_P \; L_Y}{A_Y} + \frac{B_V \; A_V \; L_Y}{B_P \; A_Y} + L_P + \frac{A_P \; L_G}{A_G} \right)$$

Grip Magnet with 6 round rod-type drive rods:

$$E_{CA} = 626 \; B_P \left(\frac{A_P \; L_Y}{A_Y} + \frac{B_T \; A_T \; L_Y}{B_P \; A_Y} + \frac{B_V \; A_V \; L_Y}{B_P \; A_Y} + L_P + KD_J + \frac{A_P \; L_G}{A_G} + \frac{B_T \; A_T \; L_G}{B_P \; A_G} \right)$$

Hold Magnet (direct type):

$$E_{CA} = 626 \; B_P \left(\frac{A_P \; L_Y}{A_Y} + \frac{B_V \; A_V \; L_Y}{B_P \; A_Y} + L_P + KD_J \right)$$

Lift Magnet:

$$E_{CA} = 313 \left[\left(B_P \; A_P + B_J \; A_J + B_V \; A_V \right) \left(\frac{L_Y}{A_{Y1}} + \frac{L_Y}{A_{Y2}} \right) + B_P \; L_P + \left(B_P \; A_P + B_J \; A_J \right) \left(\frac{L_{G1}}{A_{G1}} + \frac{L_{G2}}{A_{G2}} \right) \right]$$

APPENDIX D

COMMENTS ON OTHER TYPES OF ELECTROMAGNETIC CONTROL ROD DRIVES AND POSITION INDICATORS

Control Rod Drives

Simple Solenoid

A long coil encircles a nonmagnetic pressure shell containing a magnetic bar. The position of the rod is controlled by varying the power to the coil.

Disadvantages: Change in friction would cause erratic operation. Requires large coil (about twice the length of the travel), heavy armature, and additional length for a position indicator.

Series of Solenoids (Linear Induction Motor)

A series of iron-clad coils encircle a magnetic pressure shell containing a magnetic bar (armature) and a device which centers the armature within the shell without restricting axial movement.

Disadvantages: Requires a strong magnetic field between the shell and the armature. This creates a centering problem if the clearance is small and an efficiency problem if the clearance is large. Requires a large number of coils and leads. Does not hold the rod firmly. Also requires additional length for a position indicator.

Moving Solenoid Coil

Similar to the series-of-solenoids type; however, in lieu of the coil-switching cycle, one or more coils are moved mechanically and axially, thereby moving the armature by magnetic coupling.

Disadvantages: Requires a drive mechanism; a strong magnetic field between the coil assembly and pressure shell, and between the pressure shell and armature; and a device for indicating how closely the armature is following the coils.

Magnetic Jack Using Magnetostriction

This device uses the magnetostriction effect to move the rod. Magnetostriction refers to the slight change in length which occurs in a magnetic material under magnetic influence. This type of drive would be practical where extremely fine movement is desired (step lengths of less than 0.001 in.), and where fast movement is not required. It has the advantage of no moving parts except for the drive rods.

Magnetic Jack With Teeth

The employment of drive rods with teeth that mesh with teeth in the holder and the gripper might prove practical provided the mechanism is lubricated However for a mechanism operating in water, the tooth angle required to ensure positive self-releasing of the rods would be so nearly flat that self-engagement would not be assured.

Magnetic Jack with Grippers Having Mechanical Advantage

Magnetically-operated mechanical grippers grip and move a one-piece drive rod (not necessarily magnetic). A strong gripping force is developed from a relatively weak magnetic force.

Performance tests[1] proved the system is impractical for applications which preclude lubrication. Further, corrosion and other foreign particles occasionally prevent the grippers from releasing the drive rod, and wear promotes slippage

Position Indicators

Light Bulbs Only

Advantages Simple, reliable.
Disadvantages: Requires a large number of wires. Does not give precise position indication

One Meter and One Coil

Advantages Only two wires required; is easy to read.
Disadvantages Does not give precise position indication. Reliability depends on one meter

Series of Meters and a Series of Coils

Advantages. Gives precise position indication; is easy to read.
Disadvantage. Space factor large number of meters required on control panel

---

[1] Reactor Engineering Division Quarterly Reports:
ANL-5134 (September, 1953), p 82, ANL-5260 (April, 1954), p. 187;
ANL-5297 (July, 1954), p 171; ANL-5371 (January, 1955), p. 214;
ANL-5511 (January, 1956), p. 118.