LAWRENCE
LIVERMORE
NATIONAL
LABORATORY

LLNL-TR-819715

Department of Energy Office of Science Graduate Student Research (SCGSR) Program Mid-Award Project Report

E. Mizrachi

February 19, 2021

Disclaimer

This document was prepared as an account of work sponsored by an agency of the United States government. Neither the United States government nor Lawrence Livermore National Security, LLC, nor any of their employees makes any warranty, expressed or implied, or assumes any legal liability or responsibility for the accuracy, completeness, or usefulness of any information, apparatus, product, or process disclosed, or represents that its use would not infringe privately owned rights. Reference herein to any specific commercial product, process, or service by trade name, trademark, manufacturer, or otherwise does not necessarily constitute or imply its endorsement, recommendation, or favoring by the United States government or Lawrence Livermore National Security, LLC. The views and opinions of authors expressed herein do not necessarily state or reflect those of the United States government or Lawrence Livermore National Security, LLC, and shall not be used for advertising or product endorsement purposes.

This work performed under the auspices of the U.S. Department of Energy by Lawrence Livermore National Laboratory under Contract DE-AC52-07NA27344.

Research Goals and Objectives (5000 char max)

List the major goals of the project as stated in your SCGSR research proposal at the time of application, including the scientific and technological objectives of this effort. Describe the proposed technical approach to obtain those goals. Briefly describe how the project is contributing to your doctoral thesis/dissertation.

Three-quarters of the total mass of the universe is believed to be ”dark”, meaning that it does not interact with light; it’s presence has only been inferred through astrophysical observations. Because this so-called dark matter has never been observed directly, the question of its identity has become one of the most prominent unresolved mysteries in physics. With many answers ruled out, a direct observation of dark matter is certain to uncover new physics beyond the Standard Model, making it an enticing area of study.

One direct detection method for conducting dark matter searches is with the use of a noble liquid time projection chamber (TPC). In particular, dual-phase TPCs offer exceptionally high sensitivity at lower interaction energies and operate with an additional gaseous layer above the bulk liquid. Particle interactions occurring in the liquid are detected because energy depositions produce a small amount of light (known as “S1”) and charge in the form of ionized electrons. Electrons are then drifted through the liquid by an electric field created with high voltages metal grids at either end of the detector. Once the electrons are extracted from the liquid, they undergo electroluminescence and produce a larger second light pulse (S2). Both the S1 and S2 signals are detected by arrays of photomultiplier tubes (PMTs) and used to discriminate against background events in the detector.

TPC sensitivity is such that single electrons will create detectable S2s when extracted into the gaseous region of the detector, leading to an exceptionally low energy threshold of a few hundred keV. However, a corresponding S1 pulse would be too weak to be detected. This gives rise to TPC operation in “S2-only" mode, which shows promise for low-mass dark matter particle searches, but is currently impeded by the presence of electron background signals. This background in TPCs is widely observed, and it has been shown to correlate strongly with prior events and the presence of impurities in a detector. These impurities can come from a variety of sources such as natural air infiltration through seals, or plastics. Teflon and polyether ether ketone (PEEK) in particular are ubiquitous plastics in a TPC because of their favorable properties in cryogenic conditions and as electrical insulators. Teflon is also highly reflective of xenon scintillation light, which significantly improves light collection efficiency in a typical TPC. Nevertheless, Teflon--more so than PEEK--is known to outgas contaminants even after a sustained time under vacuum. These impurities can attenuate S2 signals by absorbing electrons in transit, and releasing them later when they may be considered background signals.

The goal of this proposal is to understand the impurity contributions of plastics in TPCs, and how those contributions from plastics impact the background rates of spurious electron signals. To accomplish this, I will retrofit an existing TPC with high purity ceramics in place of outgassing plastics. Then, I will perform measurements of electron backgrounds with the retrofitted TPC and investigate the effectiveness of ceramic substitutes in reducing plastic-borne impurities, and by extension, electron backgrounds in TPCs.

This project will compose a critical fraction of my thesis, which will broadly focus on multiple research and development improvements that can be made to noble liquid TPCs. For example, following the completion of this project, other studies on electron backgrounds and electron background models will also be performed. In order to make the most of any new

knowledge of electron background signals, my thesis will culminate in a contribution to the S2-only analysis of the upcoming LUX-ZEPLIN (LZ) dark matter search experiment. Currently, I am already involved on a volunteer basis with the LZ S2-only task force so I will be well-prepared to make those contributions. After completing my electron background studies on contributions from plastics and other sources, I will be ready to improve the sensitivity of the LZ experiment shortly after preliminary results are produced, and ensure that the best TPC measurements of low-mass dark matter particles are performed.

Project Progress in Accomplishing the Research Goals and Objectives (10000 char max)

For the period from the beginning of the SCGSR project till the time of this report, describe what was accomplished under the major goals of the project. More specifically, describe: 1) major activities; 2) specific objectives; 3) significant results or key outcomes, including major findings, developments, or conclusions (both positive and negative); and/or 4) other achievements. Include a discussion of stated goals not met.

The first step in undertaking this project was to research available literature which documents the phenomenon of electron background signals in TPCs. The results of this review have been fruitful in providing context for the goals of this project. Multiple sources of these backgrounds have been identified and characterized, but certain behaviors are not well-understood. Smaller groups, as well as leading experiments like LUX, XENON1T, and DarkSide have all investigated the timescales of electron backgrounds, their dependency on electric fields, and their dependency on xenon purity. Therefore, an examination of potential sources of impurities in a TPC would be useful in both characterizing, and potentially reducing the frequency of background signals which negatively impact TPC sensitivity.

The first major decision to make for this project entailed choosing between different low-outgassing materials which will replace Teflon and PEEK pieces in an existing liquid xenon TPC. Shapal, Macor, aluminum nitride, and quartz were all considered as candidates with acceptable electrical, thermal, and vacuum properties. However, Macor and Shapal were preferred because they can be machined into complex shapes using standard tooling. Ultimately, Shapal was chosen over Macor because the inherent radioactivity of Macor was a disqualifying factor. As Shapal contains virtually no naturally abundant radioisotopes, its radioactive background is expected to be at a manageable level.

A secondary concern for this project is the use of sensitive high voltage equipment, which will be in close proximity to Shapal replacement components. These high voltage components needed to operate the TPC are a driving factor in the decision to use a ceramic material (an insulator) instead of low-outgassing conductive materials like aluminum or stainless steel. A beneficial finding is that Shapal has a virtually identical dielectric strength in comparison to Teflon, meaning that the electrical stability of the detector should be otherwise unchanged. Usage of a material with a lower dielectric strength would in the worst case, run the risk of inducing a catastrophic electrical breakdown (i.e. a short circuit) that could damage the TPC. While this factor can be managed by lowering voltages in the electrical system, it would result in decreased TPC performance.

With these surveys complete, I began working with CAD software to create drawings for new parts, which has taken the bulk of the project time thus far. This is in part because manufacturing constraints on wall thicknesses and overall part length meant that an identical

Shapal replacement of current parts was not possible. Consequently, I collaborated with a technician onsite in an iterative design process in order to abide by TPC assembly procedures, high voltage stability requirements, and current TPC geometry that could not be modified.

The final design (Figure 2) is a segmented version of the original Teflon part (Figure 1). Segmentation first and foremost enabled manufacturing restrictions to be met (Figure 3), but also resulted in moderate cost savings as some components could be fabricated from aluminum instead of Shapal. The lower aluminum structure is also expected to provide an additional benefit by partially shielding the bottom PMT from electrical noise. As of recently, all components for this project have been received from their respective manufacturer.

Uploading Additional Materials

All Figures and Equations that are important for reporting the project progress must be placed into a single PDF document in a well-organized manner and uploaded as part of the report here. Please ensure that your figures are high resolution and that all text included in the figures is legible. Each figure must have a caption. When referencing figures in describing your project progress, please spell out and capitalize the word "Figure" and follow it with the number of the figure to which you are referring. Equations should be embedded such that no special characters or symbols are lost when converting and uploading files.

- See Attached Figures

Use of DOE Laboratory Facilities and Research Capabilities (500 char max)

Please describe the major DOE laboratory research facilities and/or research instrumentation or capabilities at the DOE laboratory that you used as they were an essential part of your SCGSR research project.

This project would not be possible to undertake without XeNu, an existing liquid xenon TPC at Lawrence Livermore National Laboratory (LLNL) available to use as a research and development testbed. The talented technical and scientific staff at LLNL have also been instrumental in providing guidance and assistance with this project.

What do you plan to do for the remaining period of your SCGSR project until the ending date to accomplish the goals and objectives? (5000 char max)

Some tasks still remain in order to complete the first objective of successfully retrofitting the TPC. While all of the components have been received, a single feature in one part was discovered that was not consistent with the 3-D model which was originally produced. This feature only requires slight modification with hand tools in order to meet the desired specifications. Once this modification has been made, installation of the parts in the TPC can proceed. With the parts installed, it will be prudent to run the TPC for testing purposes and confirm the electrical and thermal performance of the new parts are within operating capabilities.

As these new parts may slightly alter the thermal profiles of the TPC, some time may be required to tune the thermal control systems which are currently in place.

Data collection will commence once the TPC's operational capabilities have been verified. Multiple sets of background data will be taken with the new low-outgassing components, at varying levels of xenon purity. If time permits, a matching set of data will be acquired using the old Teflon components. However, this step may not be necessary as a comprehensive dataset with these older components already exists and can be re-analyzed in the context of this new study.

In the ensuing analysis, Teflon data will be used for cross-comparison with the ceramic data. It is expected that the ceramic data will show a lower impurity baseline than the plastic data, and less frequent electron background signals. This would indicate that impurities from plastic outgassing are a contributing factor to electron backgrounds, as it has already been established that these undesirable signals are correlated with the presence of impurities. An additional comparison could be made between teflon and ceramic data at identical purity levels, to determine if there are other factors at play in this study which might affect electron background rates. Ultimately. the analysis process will be flexible such that project time constraints do not exclude a manuscript preparation process, as the results from these studies will be worth publishing regardless of the outcome.

Figure 1: Original Teflon Component

- The original component was machined from a single piece of Teflon
- Holes, cutouts, etc. are necessary features which accommodate surrounding TPC geometry
  - These features were designed to fairly tight tolerances, with little room to move without impacting other parts of the TPC

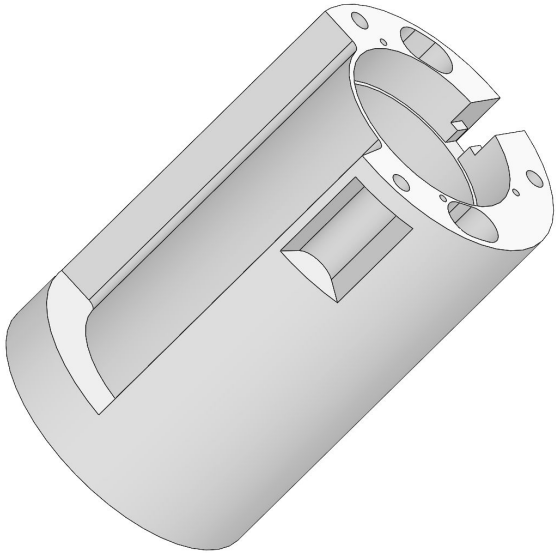

Figure 2: Segmented Design

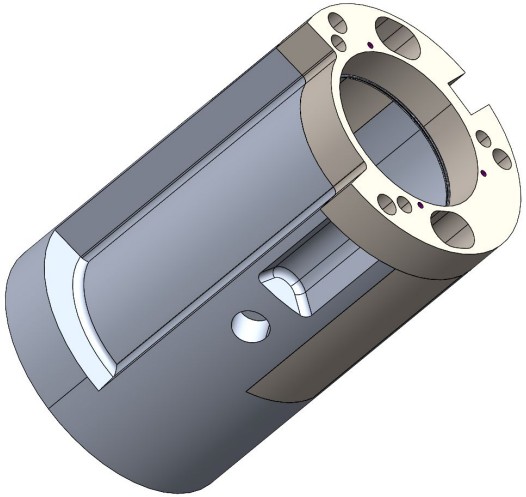

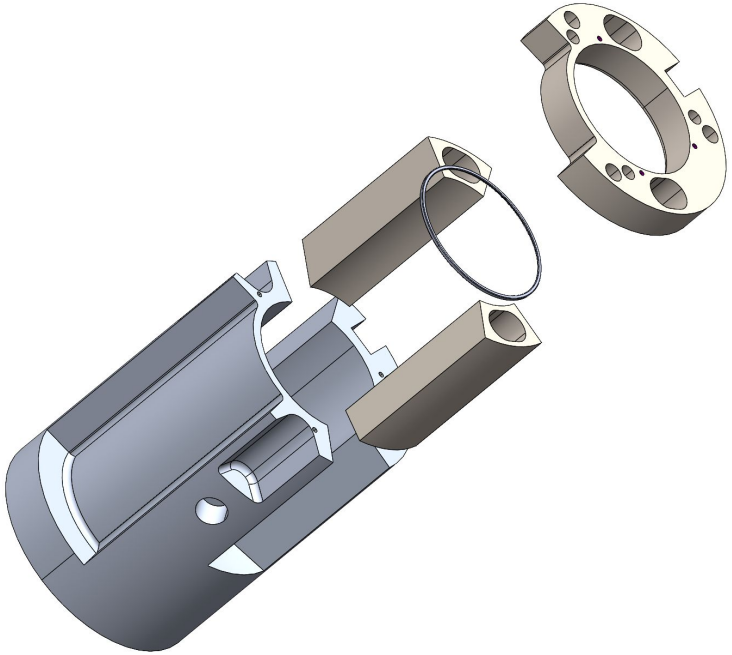

- Left: View of assembled components
- Right: Exploded view of components
- Shapal Components are beige, Aluminum components are grey

Figure 3: Manufacturing Restrictions in Original Design

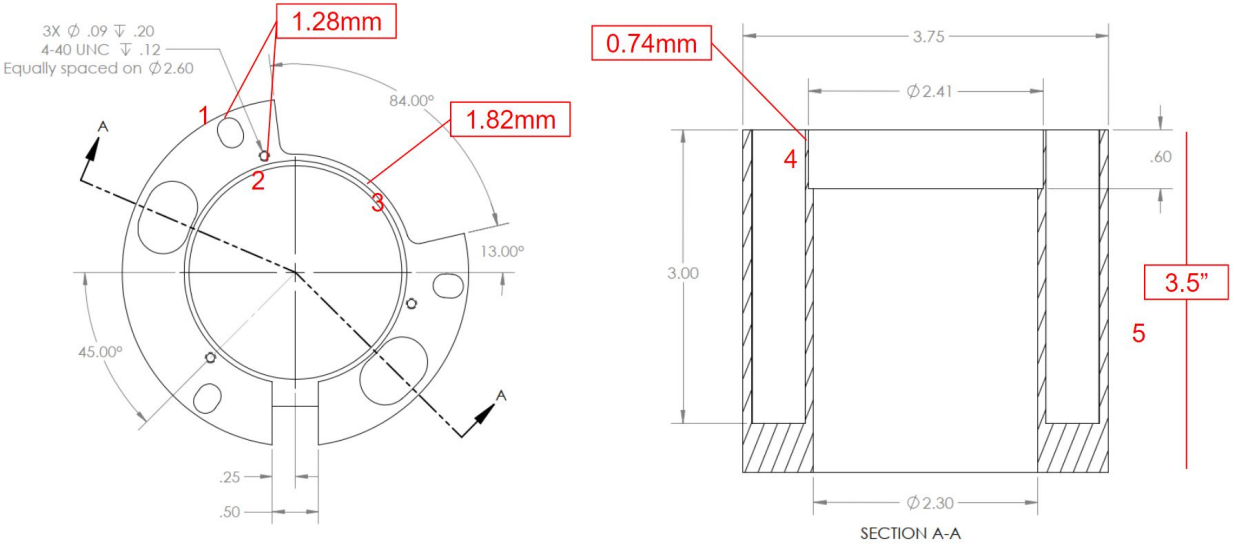

- Minimum wall thickness for Shapal is 2mm, but numerous zones were thinner
- The overall part length was also too long; the maximum acceptable Shapal part length is 3.125”