Final Report

Project Title: Hydrogen Technology and Energy Curriculum (HyTEC)

Recipient: The Regents of the University of California (Berkeley)

Award Number: DE-FG36-04GO14277

Project Director: Barbara Nagle, (510) 642-8718, bnagle@berkeley.edu

Project Period: (September 1, 2004 to August 31, 2012)

Date of Report: (February 21, 2013)

Key Words: Alternative energy, curriculum, education, high school, hydrogen, fuel cell, teacher professional development, transportation

Executive Summary

The Lawrence Hall of Science of the University of California, Berkeley has collaborated with scientists and engineers, a local transit agency, school districts, and a commercial curriculum publisher to develop, field-test nationally, and publish a two-week curriculum module on hydrogen and fuel cells for high school science. Key partners in this project are the Schatz Energy Research Center (SERC) of Humboldt State University, the Alameda-Contra Costa Transit District (AC Transit), FilmSight Productions, Lab-Aids, Inc., and 32 teachers and 2,370 students in field-test classrooms in California, Connecticut, Ohio, New York, South Carolina, and Washington. Field-test teachers received two to three days of professional development before teaching the curriculum and providing feedback used for revision of the curriculum. The curriculum, titled *Investigating Alternative Energy: Hydrogen and Fuel Cells* and published by Lab-Aids, Inc., includes a teachers guide (with lesson plans, resources, and student handout pages), two interactive computer animations, a video, a website, and a laboratory materials kit. The project has been disseminated to over 950 teachers through awareness workshops at state, regional, and national science teacher conferences.

Project Goal

Through collaboration among curriculum developers, scientists, school districts, a local transportation agency, and a commercial curriculum publisher, the project's goal was to develop, field-test nationally, revise, evaluate, publish, and disseminate a two-week curriculum module for the high school. The project also developed and implemented a professional development plan for teachers using the materials.

Project Objectives

- Develop, field test in national centers, revise, publish, and disseminate one high school curriculum module and integrate hydrogen and fuel cells into existing Lawrence Hall of Science (Hall) middle and high school materials. This module should be flexible enough to be taught in a variety of high school physical science, chemistry, and environmental science courses in classrooms representing the diversity of students in the United States.

- Develop and implement a professional development plan for the curriculum materials.
- Develop a model for collaboration among school districts, informal science centers (the Hall), university scientists (Schatz Energy Research Center—SERC) and local transportation agencies (AC Transit) to deliver exciting, up-to-date, rigorous curriculum and instruction to middle and high school students and professional development to their teachers.
- Disseminate the materials to reach a broad national audience of teachers and students.
- Evaluate the quality and effectiveness of the program.

Accomplishments

Task 1: Curriculum Development

The curriculum was developed through a close collaboration among the project partners. The SEPUP program of UC Berkeley's Lawrence Hall of Science (the Hall) contributed expertise in secondary science teaching and curriculum development, the Schatz Energy Research Center (SERC) at Humboldt State University contributed scientific and technical expertise and their experience teaching about hydrogen and fuel cells at the undergraduate level, and Alameda-Contra Costa Transit District (AC Transit) contributed expertise on real-world applications of fuel cell technology based on their HyRoad hydrogen fuel cell bus program. The Hall, SERC, and AC Transit worked together to develop the original outlines for the curriculum. The Hall developed initial activities and obtained significant scientific review and input to the activities from SERC. SERC developed and produced the prototype student electrolyzer and fuel cell for the classroom kits. SERC also developed a Stack-in-a-Box® Portable Fuel Cell Power Supply used for demonstrations in participating northern California classrooms and in the professional development workshops. Both the Hall and SERC piloted the curriculum in local classrooms and conducted professional development for local teachers. The Hall, SERC, and AC transit contributed to the development of a video field trip produced by FilmSight Productions and based on AC Transit's bus program and other hydrogen fuel cell applications in northern California. LAB-AIDS, Inc., an established publisher of kit-based science curriculum materials, collaborated with the project to publish the module as part of the SEPUP module series, develop the final commercial version of the kit that accompanies the curriculum, and market and distribute the final products.

Several cycles of development, classroom testing, and revision were used to develop the final curriculum module. Field-test teachers received two to three days of professional development the summer before using the materials with their students. Field-testing was usually conducted in the spring semester of the school year, as teachers preferred to teach the unit after their students had significant content background. Participating schools, teachers, and students were diverse. Districts included such urban districts as New York City and Oakland, Berkeley, and Emeryville, CA, and such suburban districts as Dublin, OH and Bellevue, WA. Schools included public comprehensive, magnet, alternative, technical, agricultural, parochial, and private schools. The student population included students from groups under-represented in science, technology, engineering, and mathematics (STEM) fields, English-language learners, and special needs and gifted students. While most field-test teachers used the curriculum in chemistry classrooms, some used the curriculum in physics, physical science, integrated science, and AP environmental science courses. Table 1 summarizes the participants in each round of field-testing.

Table 1: Classroom Testing of HyTEC Curriculum

School Year	Leader of Classroom Field Test	Location	Number of Teachers	Number of Students
2004–2005	The Hall	Berkeley, CA	1	150
2005–2006	The Hall SERC	Emeryville, CA Arcata, CA	2	100
2006–2007	The Hall	Berkeley, CA	2	160
2007–2008	Classroom teachers	Berkeley, CA Emeryville, CA Bellevue, WA	3	60
2008–2009	Classroom teachers	San Francisco East Bay, CA Dublin, OH Bellevue, WA	13	1000
2009–2010	Classroom teachers	Connecticut Georgia New York City South Carolina Southern California (Los Angeles area)	11	900
Total Number of Participants			32	2370

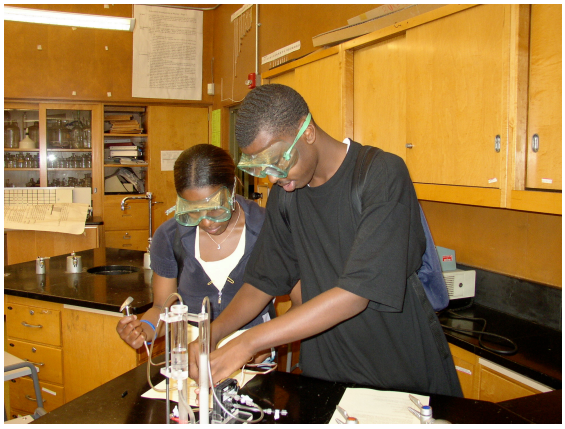

Figure 1: Students in Emeryville, California, participate in early classroom trials led by The Lawrence Hall of Science.

The module produced as a result of this curriculum development process, titled *Investigating Alternative Energy: Hydrogen & Fuel Cells*, was published by Lab-Aids, Inc. in 2011. The module includes a two-week sequence of six activities that teach students about hydrogen and fuel cells. The print materials include a teacher's guide (see Figure 2) with student handout pages, background information, lesson plans, a glossary, and a test item bank. The curriculum also includes two interactive computer animations, a video, a website (www.sepuplhs.org/hydrogen), and a complete materials kit. This kit includes a student electrolyzer and fuel cell and materials required for the laboratory and modeling activities in the curriculum module. The website provides: 1) the videos of hydrogen fuel cell applications, including fuel cell buses (http://www.sepuplhs.org/high/hydrogen/videos.html), 2) the two interactive computer animations of the hydrogen fuel cell reaction and the production of hydrogen in an alkaline electrolyzer (www.sepuplhs.org/high/hydrogen/simulations.html), and 3) resources for the module's culminating activity. The video and simulations are also included on a CD that is provided with the module, so teachers who have problems accessing the Internet in their classrooms can use the CD when teaching. The website, including the resources, videos, and simulations, is open to all, and also offers additional information about hydrogen and fuel cells for teachers, students, and the public.

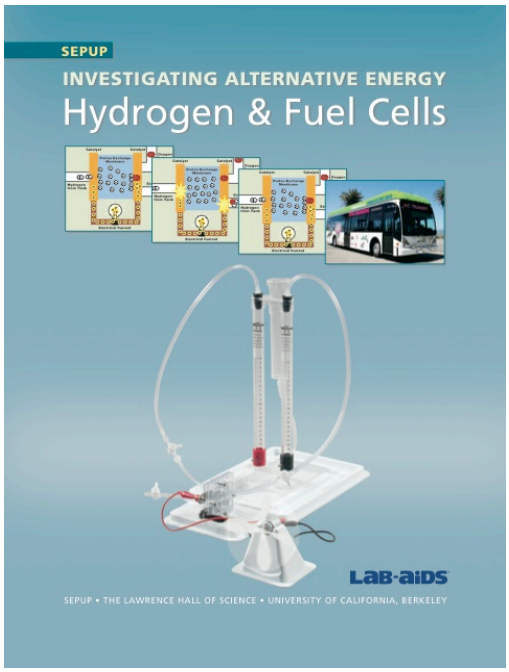

Figure 2: The cover of the Teacher Guide (above left) shows the student electrolyzer and fuel cell, which are part of the equipment kit for the module. A video field trip (above right) is part of the curriculum CD, and is also available on the project website.

The curriculum module is based on SEPUP's issue-oriented approach to science. In this approach, students discuss the relationship of science to their own lives and to societal concerns such as energy production. Descriptions of the six module activities follow.

1. Hydrogen for Transportation? Students examine data and analyze trade-offs of various vehicle/fuel combinations to set a context for the activities.
2 Obtaining Hydrogen through Electrolysis: Students generate hydrogen and oxygen and examine the required energy input, stoichiometry, and electrochemistry involved in the process. An optional computer animation can be used to examine the electrolysis reaction.
3. Observing a Fuel Cell: Students generate hydrogen and oxygen, and use a single cell fuel cell to perform work.
4. Modeling the Fuel Cell Reaction: Students use model pieces and a fuel cell computer animation to explore the fuel cell reaction.
5. Fuel Cell Efficiency: Students measure the efficiency of the student fuel cells.
6. Hydrogen for Buses? Students conduct research and engage in a simulated City Council Meeting to apply what they have learned and present the advantages and challenges of using hydrogen and fuel cells for a city bus program.

The curriculum has been correlated to the National Science Education Standards and to the science standards of seven key states: California, Connecticut, Michigan, New York, Ohio, South Carolina, and Texas. The correlations are currently hosted on the SEPUP website at http://sepuplhs.org/high/hydrogen/standards.html.

Both SERC and the Hall also created outreach sessions of one to three hours that were based on the HyTEC curriculum kit materials. These sessions, funded independently of this grant, were delivered in local schools and camps to extend the impact of the project's work. SERC reached over 650 students, and the Hall reached over 2,000 students with these sessions.

Task 2: Professional Development

The professional development program was developed, tested, and refined over three years of field-testing. The goals of this program were to provide teachers with a strong foundation in the science of hydrogen fuel cells and prepare them to teach the curriculum to their students. A complete list of professional development workshops is provided in Table 2. In the two- to three-day professional development workshops, participating teachers conducted the six module activities, including use of the video and computer simulations, received a presentation on the science of fuel cells and their applications by scientific experts, and (when held in the San Francisco Bay Area in 2007–2010) visited the AC Transit hydrogen fuel cell bus facility in Oakland. During this half-day visit, teachers had a chance to ride the hydrogen bus or drive a hydrogen fuel cell car, tour the hydrogen production facility and fueling station, and talk to technical experts about the buses. Scientific presentations were provided by SERC in 2007–2010 and by UTC in 2012 at the Connecticut Science Center in Hartford. SERC also conducted three one- to two-day HyTEC teacher professional development workshops at Humboldt State University. In addition to these full professional development workshops, the project was invited to present three shorter workshops for teachers participating in Chabot Space & Science Center's Summer Climate Change Institute in Oakland, CA.

Table 2: Professional Development Workshops

Start Date	Location	Duration	Approximate Number of Teachers
7/30/2007	The Lawrence Hall of Science	2 days	6
6/24/2008	The Lawrence Hall of Science	3 days	14
6/24/2009	Chabot Space & Science Center	2 hours	12
6/25/2009	SERC	2 days	3
7/8/2009	Lawrence Berkeley National Laboratory	3 days	19
8/04/2009	SERC, as part of HSU's 2009 "Design Your Future" Teacher Institute	2 days	12
5/23/2010	SERC, as part of HSU's 2010 "Design Your Future" Teacher Institute	1 day	7
6/27/2010	Chabot Space & Science Center	2.5 hours	24
2/19/2011	The Lawrence Hall of Science	2 days	13
6/27/2011	Chabot Space & Science Center	2.5 hours	22
5/30/2012	Connecticut Science Center	2 days	17
8/6/2012	SERC	2 days	4
Total Number of Teachers			**153**

Figure 3: Teachers who attended professional development workshops participated in all curriculum activities and a field trip to AC Transit, where they rode hydrogen fuel cell vehicles and met with staff working on the fuel cell bus program.

Because face-to-face professional development might not be available to all teachers who implement the curriculum in the future, and because teachers expressed a need for a short refresher before teaching the curriculum, the project also produced a series of videos for teachers. The videos are available on the project website and on YouTube. In addition to providing support for teachers implementing the curriculum, the videos provide general information helpful in workshops and other efforts to disseminate the materials. These teacher support videos are available on the SEPUP website at sepuplhs.org/high/hydrogen/videos.html. They include:

1. An introduction to the curriculum.
2. How to set up and run the student electrolyzer and produce hydrogen (Curriculum Activity 2).
3. How to identify the gases produced by the electrolyzer (Curriculum Activity 2).
4. How to use the hydrogen produced by the electrolyzer to operate the student fuel cell (Curriculum Activity 3).
5. Modeling the fuel cell reaction (Curriculum Activity 4).
6. Measuring the energy efficiency of the fuel cell (Curriculum Activity 5).
7. Safety and care of the kit equipment.

Task 3: Dissemination

From 2006 through 2012, project staff and teacher associates presented 40 HyTEC awareness workshops to over 950 teachers at local, state, regional, and national science teacher conferences. These 45-to-90 minute workshops introduced the module, demonstrated the student electrolyzer and fuel cell, and engaged teachers in one or more of the curriculum activities (typically Activity 4, "Modeling the Fuel Cell Reaction," provided as an Appendix to this report). Participants received handouts, information about how to access the computer animation of the fuel cell reaction, an introduction to the project website and videos, and hands-on materials for modeling the hydrogen fuel cell reaction in their classrooms. These workshops are listed in the Presentations section of this report.

LAB-AIDS, the publisher of the curriculum, displayed the laboratory kit and print materials at their booth in the exhibit hall at the 2011 and 2012 NSTA conferences. The LAB-AIDS sales team was introduced to the module by Hall staff at sales meetings in 2011 and 2012. The Hall and LAB-AIDS will continue to present the curriculum at future conferences, and the Hall will continue to make the full curriculum, including the kit, available to San Francisco Bay Area teachers.

Task 4: Evaluation

Curriculum

Formative evaluation of the curriculum was carried out by project partners at SERC and the Hall and by the participating teachers. During each professional development conference and after each field-test, feedback was gathered from the teachers on each activity in the curriculum module through surveys and/or interviews. Teachers' comments were used to revise the curriculum after each round of classroom testing. All of the teachers were generally positive about the curriculum, and made numerous specific suggestions for improving the activities so they would work in a variety of classroom settings with diverse students. The

overall rating of the curriculum by teacher professional development participants is provided in Row 1 of Table 3. Teachers commented favorably on the information, equipment, pedagogical strengths, and practicality of the curriculum. Comments included:

- "Using this kit is an excellent way to bring in the concepts of science and social responsibility. The concepts were challenging and thought provoking, but obtainable and relevant."
- "I really enjoyed the approach that was used to teach this unit."
- "Good for all high school levels."
- "[I] encourage you to develop more high school curricula."
- "It is obvious that you have taken experiences and advice from teachers and workshops in the development process in order to make this a quality program and product."

In order to measure learning gains, a sample of students who participated in the field-test of the curriculum were given a pre-test and a post-test; the tests were developed by the curriculum developers and were identical. Tests were scored and analyzed by the Research Group of the Lawrence Hall of Science. They concluded that the analysis of the results "produces an effect size of .93 of a standard deviation, which is generally considered a very large effect size."

Professional Development

In the workshop evaluations used by the Hall, participants ranked aspects of the professional development workshop on a scale from 1 (not adequate) to 5 (excellent). The results of the workshop evaluation are presented in Table 3, and indicate that all aspects of the program were rated between very good (4) and excellent (5) each year of the program. (The program did not include a field trip to AC Transit or presentation by SERC because of scheduling difficulties in 2011 and the location of the program in Connecticut in 2012.)

Table 3: Professional Development Workshop Evaluations

Aspect of workshop	**2008**	**2009**	**2011**	**2012**
1. Curriculum activities	4.4	4.7	4.73	4.94
2. Activity presentations	4.7	4.7	5	4.75
3. Scientific presentations	4.9	4.6		
4. Field trip to AC Transit	4.7	4.3		
5. Schedule	4.9	4.7	4.85	4.63

6. Conference arrangements	5.0	4.8	4.75	4.73
6. Comparison to other workshops*	4.7	4.7	4.85	4.73

* The question asked: Compared to other workshops and professional development sessions I have attended, overall I would rank this one as. . .

The teachers' comments about the workshop reflected the positive rankings, and included:

- "Surpasses anything else I have done by far."
- "This was one of the best workshops I have attended."
- "Very informative. One of the better workshops I have attended."
- "Good hands-on practice and enough explanation. Support materials for teachers help me feel comfortable doing this with my class."
- "Very worth my time!"
- "The workshop was a complete package... from the materials and their integration into the curriculum... well done."

Dissemination Workshops

The National Science Teachers Association collects anonymous evaluations of workshops presented at their national conference and reports the results back to presenters. Participants' responses averaged between "agree" and "strongly agree" for both of the following statements.

The information presented was clear and well organized.

The session should be repeated at another NSTA conference.

Patents: None

Publications

1. SEPUP. (2011). Investigating Alternative Energy: Hydrogen & Fuel Cells. The Lawrence Hall of Science, University of California, Berkeley. Published by Lab-Aids, Inc. Ronkonkoma, NY
2. The website and video resources developed as part of the project are available at sepuplhs.org/hydrogen and described above.

Presentations

At DOE Program Reviews

1. Nagle, Barbara, "Hydrogen Technology and Energy Curriculum (HyTEC)," presentation to the 2005 DOE Hydrogen Program Review," May 26, 2005.
2. Nagle, Barbara, "Hydrogen Technology and Energy Curriculum (HyTEC)," presentation to the 2006 DOE Hydrogen Program Review," May 17, 2006.

3. Zoellick, Jim, "Hydrogen Technology and Energy Curriculum (HyTEC)," presentation to the 2007 DOE Hydrogen Program Review," May 18, 2007.
4. Nagle, Barbara, "Hydrogen Technology and Energy Curriculum (HyTEC)," presentation to the 2008 DOE Hydrogen Program Review," June 12, 2008.
5. Nagle, Barbara, "Hydrogen Technology and Energy Curriculum (HyTEC)," presentation to the 2010 DOE Hydrogen Program and Vehicle Technologies Program Review," June 10, 2010.
6. Nagle, B., "HyTEC," *FG36-04-GO14277*, presentation to the DOE Hydrogen Program and Vehicle Technologies Program Review, Arlington, VA, May 10, 2011. (http://www.hydrogen.energy.gov/annual_review11_edu.html)

At national, regional, and state science teacher conferences

1. Nagle, B., and Zoellick, J. "Teaching Chemistry with Hydrogen Fuel Cells," California Science Teacher's Association Conference, October 21, 2006, San Francisco, California.
2. Nagle, B. "Teaching Chemistry with Hydrogen Fuel Cells," National Science Teacher's Association Conference, March 31, 2007, St, Louis, Missouri.
3. Nagle, B. and L. Whitehurst. "The Chemistry of Hydrogen Fuel Cells." California Science Teacher's Association Conference, October 31, 2008, San Jose, California.
4. L. Baumgartner and B. Nagle. "Teaching Chemistry with Hydrogen Fuel Cells," National Science Teacher's Association Conference, March 28, 2008, Boston, Massachusetts.
5. B. Nagle, J. Zoellick, and P. Lehman. "Hydrogen Technology and Energy Curriculum (HyTEC) for High School Science," National Hydrogen Association Conference, March 31, 2008, Sacramento, California.
6. L. Baumgartner. "Teaching with Hydrogen and Fuel Cells," Hydrogen and Fuel Cell Education Forum held at the World Hydrogen Energy Conference, June 18, 2008, Brisbane, Australia.
7. Nagle, B. and L. Whitehurst. "The Chemistry of Hydrogen Fuel Cells." California Science Teacher's Association Conference, October 31, 2008, San Jose, California.
8. Nagle, B. "Alternative Energy for Transportation: Hydrogen and Fuel Cells." National Science Teachers Association National Conference, March 20, 2009, New Orleans, Louisiana.
9. Nagle, B, and J. Howarth. "Teach Chemistry with Hydrogen Fuel Cells." National Science Teachers Association National Conference, March 21, 2009, New Orleans, Louisiana.
10. Zoellick, J. "HyTEC: "Introducing Hydrogen and Fuel Cells into High School Science Curriculum." National Hydrogen Association Conference, March 31, 2009, Columbia, South Carolina.
11. Nagle, B. and E. Argenta. "Hydrogen and Fuel Cells." Connecticut Science Teacher's Association Conference, October 17, 2009, Hamden, Connecticut.
12. Nagle, B. "Teaching Chemistry with Hydrogen and Fuel Cells." California Science

Teachers Association Conference, October 23, 2009, Palm Springs, California.

13. Keller, C. "Alternative Energy for Transportation: Hydrogen and Fuel Cells." State Teachers Association of New York State Conference, November 3, 2009, Rochester, New York.
14. Nagle, B. "Teach Chemistry with Hydrogen and Fuel Cells." Texas Science Teachers Association Conference, November 7, 2009, Galveston, Texas.
15. Keller, C. "Alternative Energy for Transportation: Hydrogen and Fuel Cells." National Science Teachers Association Regional Conference, December 5, 2009, Phoenix, Arizona.
16. Crawford, C. and D. Parker. "Alternative Energy for Transportation: Hydrogen and Fuel Cells." Science Education Conference of Ohio. February 26, 2010.
17. Nagle, B. "Teaching Chemistry with Hydrogen and Fuel Cells." National Science Teachers Association National Conference, March 18, 2010, Philadelphia, Pennsylvania.
18. Nagle, B. "Alternative Energy for Transportation: Hydrogen and Fuel Cells." National Science Teachers Association National Conference, March 18, 2010, Philadelphia, Pennsylvania.
19. Nagle, B. "HyTEC: Teaching High School Students and Teachers about Hydrogen and Fuel Cells." National Hydrogen Association Conference. May 4, 2010, Long Beach, California.
20. Nagle, B. and C. Keller. "Hydrogen Technology and Energy Curriculum (HyTEC)." Presentation to high school teachers at the Chabot Space & Science Center's Climate Change Institute. June 28, 2010.
21. Keller, C. "Alternative Energy for Transportation: Hydrogen and Fuel Cells." California Science Education Conference. October 22, 2010. Sacramento, CA.
22. Nagle, B. & Percoski, T. "Alternative Energy for Transportation: Hydrogen and Fuel Cells." Connecticut Science Education Conference. October 30, 2010. Hamden, Connecticut.
23. Nagle, B. "Alternative Energy for Transportation: Hydrogen and Fuel Cells." South Carolina Science Council (SC^2). November 4, 2010. Myrtle Beach, South Carolina.
24. Howarth, J. "Alternative Energy for Transportation: Hydrogen and Fuel Cells." North Carolina Science Teachers Association Professional Development Institute. November 11, 2010. Greensboro, North Carolina.
25. Lenz, L. "Teach Chemistry with Hydrogen Fuel Cells." NSTA Area Conference. November 11, 2010. Baltimore, Maryland.
26. Nagle, B. "Teach Chemistry with Hydrogen and Fuel Cells." Conference for the Advancement of Science Teaching (CAST) 2010. November 12, 2010. Houston, Texas.
27. Lenz, L. "Alternative Energy for Transportation Hydrogen Fuel Cells." Science Education Council of Ohio (SECO). February 12, 2011. Akron, Ohio.
28. Lenz, L. "Alternative Energy for Transportation: Hydrogen and Fuel Cells." Georgia

Science Teacher's Association. February 18, 2011. Atlanta, Georgia.

29. Howarth, J. "Alternative Energy for Transportation: Hydrogen and Fuel Cells." Michigan Science Teachers Association. February 26, 2011. Grand Rapids, Michigan.
30. Zoellick, J. SEPUP Pathway Session: "Alternative Energy and Transportation: Hydrogen Fuel Cell and Other Bus Technologies." National Science Teachers Association. March 10, 2011. San Francisco, California.
31. Keller, C. "Teaching About Hydrogen Fuel Cells." National Science Teachers Association. March 12, 2011. San Francisco, California.
32. Willcox, M. "Alternative Energy for Transportation: The Chemistry of Hydrogen Fuel Cells." Wisconsin Society of Science Teachers Conference. March 18, 2011. Wisconsin Dells, Wisconsin.
33. Keller, C., and Nagle, B. "Hydrogen Technology and Energy Curriculum (HyTEC)." Workshop presented at the Chabot Space & Science Center's Climate Change Teacher Institute. June 27, 2011.
34. Willcox, M. "Alternative Energy for Transportation: Hydrogen and Fuel Cells." California Science Teachers Association Regional Conference. October 21, 2011. Pasadena, California.
35. Nagle, B. "Alternative Energy for Transportation: Hydrogen and Fuel Cells." National Science Teachers Association Regional Conference. October 29, 2011. Hartford, Connecticut.
36. Willcox, M. "Teaching about Hydrogen Fuel Cells." National Science Teachers Association Regional Conference. December 10, 2011. Seattle, Washington.
37. Willcox, M. "Investigating Alternative Energy: Hydrogen and Fuel Cells." Georgia Science Teachers Association Conference. February 17, 2012. Atlanta, Georgia.
38. Willcox, M. "Teaching Chemistry with Hydrogen and Fuel Cells." Wisconsin Science Teachers Association Conference. March 9, 2012. Madison, Wisconsin.
39. Lenz, L. "Fuel for the Next Generation." Michigan Science Teachers Association Conference. March 9, 2012. Lansing, Michigan.
40. Nagle, B. "Fuel for the Next Generation." National Science Teachers Association Conference. March 30, 2012. Indianapolis, Indiana.

<u>At other professional conferences</u>

1. B. Nagle, J. Zoellick, and P. Lehman. "Hydrogen Technology and Energy Curriculum (HyTEC) for High School Science," National Hydrogen Association Conference, March 31, 2008, Sacramento, California
2. Zoellick, J. "HyTEC: "Introducing Hydrogen and Fuel Cells into High School Science Curriculum." National Hydrogen Association Conference, March 31, 2009, Columbia, South Carolina.
3. Nagle, B. "HyTEC: Teaching High School Students and Teachers about Hydrogen and Fuel Cells." National Hydrogen Association Conference. May 4, 2010, Long Beach, California.

Appendix: Sample Curriculum Activity

Activity 4: The Fuel-Cell Reaction
Teacher Pages
Student Pages

Activity 4

1-2 CLASS SESSIONS

Modeling the Fuel Cell Reaction

Overview

In order to understand the chemistry of fuel cells, students are introduced to oxidation-reduction (redox) reactions and half-reactions as a means of creating electric current. They then work with a computer simulation of a proton exchange membrane (PEM) fuel cell to investigate the chemical reactions that occur within a fuel cell. To deepen their understanding, they also manipulate models of oxygen and hydrogen molecules on a schematic diagram of a PEM fuel cell.

CONCEPTS, PROCESSES, AND ISSUES

(with NSES 9–12 Content Standards Correlation)

1. Chemical reactions occur all around us, for instance in automobiles. *(PhysSci: 3)*
2. Chemical reactions may release or consume energy. *(PhysSci: 3)*
3. A large number of important reactions involve the transfer of electrons (oxidation/reduction reactions). (*PhysSci: 3*)

TEACHING SUMMARY

Step 1.
Introduce redox reactions.

Step 2.
Explore a computer simulation of a fuel cell.

Step 3.
Model the redox half-reactions in a fuel cell.

Step 4.
Evaluate the possibility of using fuel cells to replace internal combustion engines on buses.

MATERIALS

For each group of two students

- fuel cell molecular modeling set (11 pieces)
- computer with access to SEPUP Fuel Cell Simulation*

**Not supplied in kit*

Advance Preparation

You can use either the DVD supplied to transfer the SEPUP Fuel Cell Simulation to each computer; or if you want your students to have the opportunity to compare this computer simulation with others, arrange for them to have computers with Internet access and direct them to the simulation on the student page of the *Hydrogen & Fuel Cells* website at *sepuplhs.org/hydrogen*.

Background Information

HYDROGEN FOR FUEL CELLS

A chemical reaction that involves the transfer of electrons is called an oxidation-reduction, or redox, reaction. Redox reactions are responsible for the production of electrical current in fuel cells and batteries.

Like a battery, a fuel cell is an electrochemical device that converts chemical energy into electricity. Unlike a battery, the anode and cathode reactant chemicals in a fuel cell can be replenished without interrupting the production of electricity.

In a fuel cell, the anode and cathode are made of a carbon-supported platinum catalyst fixed to a porous conductive material, such as a carbon cloth or paper.

© 2011 REGENTS OF THE UNIVERSITY OF CALIFORNIA

This catalyst facilitates a redox reaction without being altered or used up. Therefore, as long as the fuel cell is continuously supplied with reactant chemicals—hydrogen and oxygen, in the case of a PEM fuel cell—the fuel cell will produce electricity. This reaction typically produces electrical energy at a higher efficiency than burning the hydrogen in a heat engine to drive a generator. The only by-product is pure water.

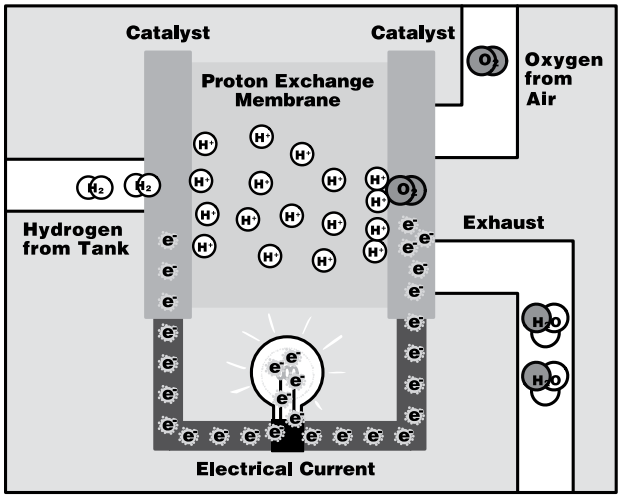

In a PEM fuel cell, hydrogen gas is fed into the anode and oxygen gas (or air) is fed into the cathode. The platinum catalyst at the anode facilitates the splitting of the hydrogen atoms into protons (H^+) and electrons (e^-).

Between the anode and the cathode is an electrolyte. In PEM fuel cells (the type used in this curriculum unit, and one which is in use in various prototype cars and buses), the electrolyte is a solid polymer membrane that allows only protons to pass through. Because the membrane bars the passage of electrons, the electrons generated from the hydrogen at the anode are carried through an electric circuit, through a load where they can perform useful work, and then to the cathode.

At the cathode, another platinum catalyst facilitates the combining of oxygen gas with the incoming electrons (coming through the load-bearing circuit) and protons (coming through the membrane) to form water molecules. The water can be formed as either a liquid or a gas. Here, we assume it will be formed as a gas.

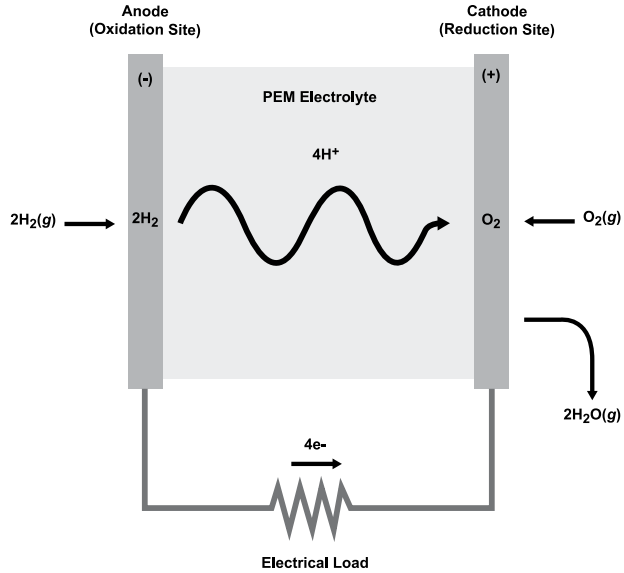

The two half-reactions in a hydrogen fuel cell are shown in the table below, along with their cell potentials.

	Reaction	Cell Potential
Anode (H_2 is oxidized, loses electrons)	$2H_2(g) \rightarrow 4H^+ + 4e^-$	$E_{oxid} = 0.0$ V
Cathode (O_2 is reduced, gains electrons)	$O_2(g) + 4H^+ + 4e^- \rightarrow 2H_2O(g)$	$E_{red} = 1.18$ V
Overall	$2H_2(g) + O_2 \rightarrow 2H_2O(g)$	$E_{cell} = 1.18$ V

Note that the electrode potentials given are based on a standard reduction potential for a 1M aqueous solution at 25°C. These are approximate for the PEM fuel cell since it uses a solid polymer electrolyte rather than a 1M aqueous solution. Also note that the standard cell potential increases to 1.23 V if water is formed as a liquid because additional energy is available from the heat of vaporization.

The same PEM technology can be used in a PEM electrolyzer, which operates in the nonspontaneous, reverse direction. A PEM electrolyzer requires an input of electrical energy to split water into hydrogen and oxygen gas. In the electrolytic cell the reactions are identical, but they are forced in the opposite direction.

BATTERIES

In a battery, redox reactions also result in the generation of electricity. In a battery, the two half-reactions

of a spontaneous redox reaction are separated, and electrons are passed through an electric circuit. The reactant chemicals at the anode, where oxidation occurs, become depleted while delivering electrons to the circuit. The reactant chemicals at the cathode, where reduction occurs, also become depleted as they accept the electrons. When the concentration of reactant chemicals becomes too low, the battery stops producing enough electrical energy and needs to be replaced or recharged.

The voltage produced by the redox reaction in an electrochemical cell is determined, in part, by the chemicals used at the anode and cathode. Each chemical has a redox potential, or electromotive force (EMF), that is defined as the voltage generated when that chemical, and its associated 1M electrolyte solution, is connected to a platinum electrode surrounded by a 1M concentration of hydrogen gas. All other things being equal, the greater the difference in EMF between the two chemicals used in an electrochemical cell, the greater the voltage generated by that cell.

FUEL CELL PARTS: FORM AND FUNCTION

Polymer Electrolyte

The schematic of a PEM fuel cell shown on the previous page is a simple conceptual model. This section describes the form and function of typical fuel cell parts. A single-cell PEM fuel cell is made up of a PEM electrolyte sandwiched between two electrodes. The PEM electrolyte is a solid polymer membrane (see Figure 1 for the chemical structure). The polymer starts as a polyethylene hydrocarbon chain equivalent to a number 2 or 4 recyclable plastic. Substituting fluorine atoms for hydrogen atoms in a process called perfluorination modifies the polyethylene and creates a modified polymer known as polytetrafluoroethylene, or PTFE . PTFE is sold under a registered trademark as Teflon®. The strong bonds between the fluorine and carbon atoms make PTFE durable and resistant to chemical attack. It is also strongly hydrophobic (repels water); when it is used in fuel cell electrodes it drives the water out of the electrode and prevents flooding. This same property makes it useful in outdoor clothing and footwear.

In order to make an electrolyte out of the solid polymer, the PTFE is sulphonated by adding a molecular side chain that ends in a sulphonic acid group ($-SO_3H$). The sulphonic acid group is highly hydrophilic (attracts water). When water is absorbed, the sulphonic acid group ionizes, releasing a H^+ ion, or proton. The H^+ ions tend to interact with water to form hydronium ions (H_3O^+). The H^+ ions are then transported through the membrane via bulk movement of the hydronium ions as well as via transfer from one water molecule to the next. This is what allows for proton conductivity through the solid polymer proton exchange membrane.

Figure 1. Chemical structure of the polymer electrolyte

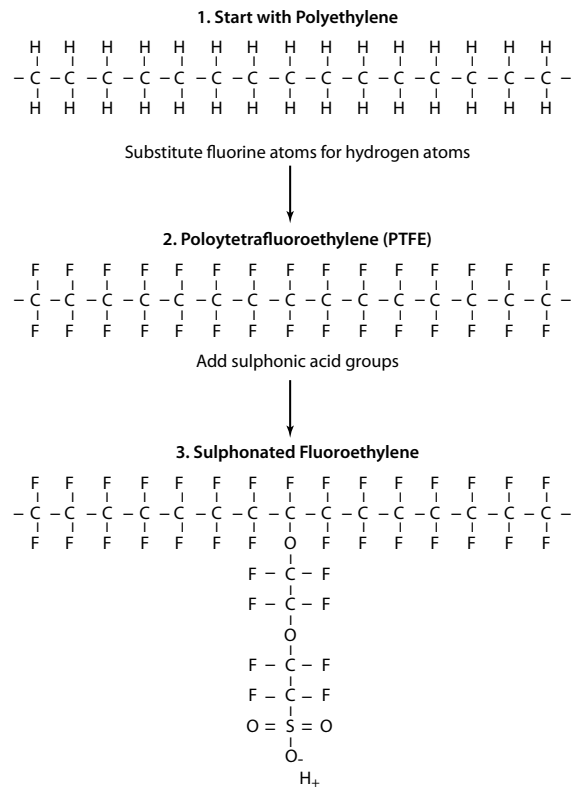

Electrodes and Electrode Structure

The electrodes for a PEM fuel cell are typically composed of a carbon supported platinum catalyst. The catalyst is needed to lower the activation energy of the fuel cell redox reaction, thereby allowing for the practical application of this electrical power-producing device. Note that in the early days of PEM fuel cell development significant quantities of platinum were needed. This led to a large cost associated with the platinum. Today platinum loadings have been reduced to levels where they now make up only a small portion of the total cost of PEM fuel cells. The platinum catalyst is typically formed into very small

particles on the surface of somewhat larger, carbon-based powders. The carbon-supported catalyst is then fixed to each side of the polymer electrolyte membrane and creates the two electrodes (anode and cathode). This electrolyte membrane (see Figure 2), with an electrode on either side, is referred to as the membrane-electrode assembly (MEA).

A thin, porous carbon cloth material is placed up against each side of the membrane-electrode assembly (MEA). This carbon cloth is referred to as the gas diffusion medium (GDM). The gas diffusion medium serves to distribute the gas reactants uniformly throughout the membrane electrode assembly. In addition, the gas diffusion medium is electrically conductive, so it serves to transport electrons to and from the electrodes, and it is treated with Teflon® to make it hydrophobic so that it will transport water away from the electrodes.

Figure 2.
Simplified structure of a PEM fuel cell

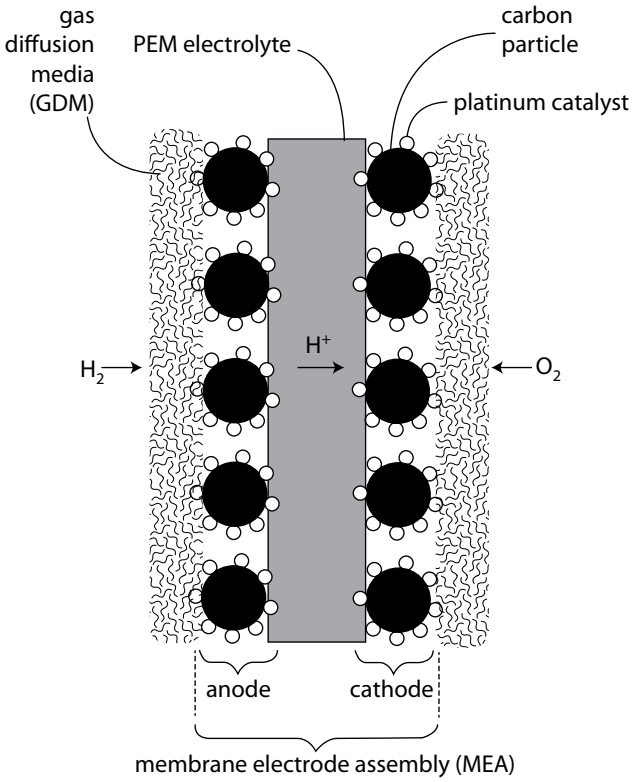

In the fuel cell used in the student laboratory exercises, the MEA and GDMs previously described are sandwiched between two perforated metal plates, or screens. These screens serve to distribute the reactant gases and conduct current to and from the electrodes, as well as to provide structural support and provide a uniform pressure on the MEA and GDMs. This whole assembly is then sandwiched between two plastic endplates, which provide structural support. The overall assembly is bolted together using a gasket material to provide a gas-tight seal (see Figure 3).

Figure 3.
Overall assembly of a Heliocentris fuel cell used in this model

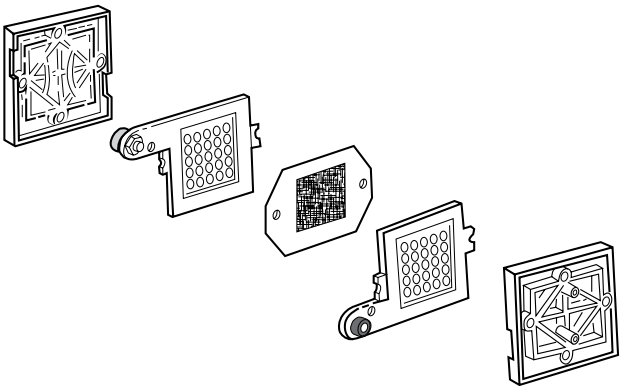

The maximum theoretical open circuit voltage of a single fuel cell, as defined by the standard reduction potential for the fuel cell redox reaction, is 1.18 V (assuming the water is formed as a gas). In practice, the open circuit voltage (the voltage when no electrical load is connected) for a well-working fuel cell is approximately 0.9 V, and a power producing cell typically operates in the range of 0.6 V to 0.7 V.

A Fuel Cell Stack

In order to build enough voltage to produce useful electrical power, fuel cells must be stacked electrically in series. This can be accomplished in the classroom by simply connecting the negative electrode of one student fuel cell to the positive electrode of another. In practice, however, a fuel cell "stack" is fabricated as a complete unit.

A fuel cell stack consists of numerous cells that are stacked physically against one another so that their electrodes are connected in series (the anode of one cell is connected to the cathode of the adjacent cell). The number of cells stacked in series determines the operating voltage range of the fuel cell stack, and the active area of the fuel cell membranes determines the current generating potential of the cells (a larger active area equals greater current generating capacity). A fuel cell engineer uses these attributes—the area of the cells and the number of cells in series—to

design a fuel cell stack that meets specified current and voltage requirements. Since the product of current and voltage is power, the number of cells and the cross sectional area of the cells defines the electrical power a given fuel cell stack can deliver. Figure 4 shows the conceptual assembly of a three-cell stack (three cells stacked in series). By examining the figure you can see how the hydrogen and oxygen gases (the reactants) are fed to each of the cells. The hydrogen is fed to the anode and the oxygen is fed to the cathode of each cell. A manifold within the stack delivers the gases to each cell. In Figure 4 you can also see how the cells are stacked in series, with the anode of one cell being physically connected to the cathode of the adjacent cell. Note that you may want to compare Figure 4 with the exploded diagram of a three-cell stack depicted in the Extension to Activity 3 in the Student Book.

Note that in a real fuel cell stack, gaskets and structural end plates would be added along with bolts that hold the whole unit together. The plates that channel the gases and transport the current to and from the electrodes are typically made out of graphite (note that the anode and cathode screens in the student fuel cells serve these functions and they are made of stainless steel). Graphite is used because it is highly electrically conductive, chemically resistant, and easy to machine into properly shaped pieces with grooves that channel the gases to the electrodes.

Figure 4.
Simplified schematic of a three-cell fuel cell stack

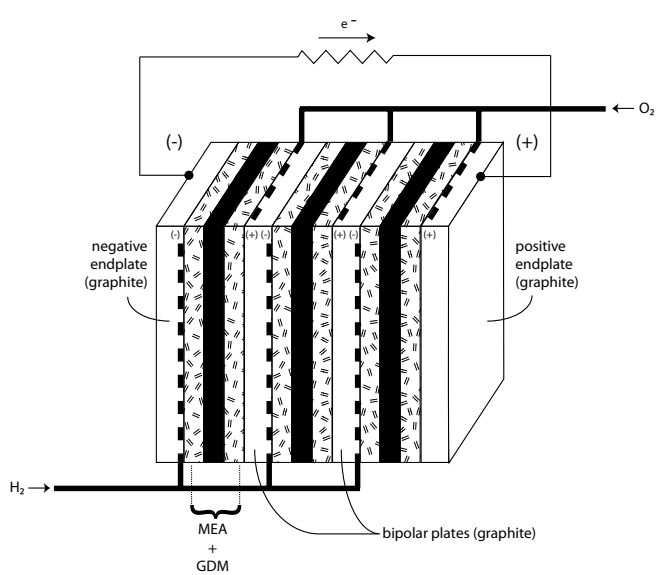

Teaching Suggestions

GETTING STARTED

Step 1. Introduce redox reactions.

If students are familiar with the chemistry of batteries (from a previous electrochemistry unit, for example), it might be useful to begin by reviewing or explaining how batteries work. Explain that chemical reactions within the battery release (and accept) electrons, thus creating an electric current.

Introduce the term *oxidation-reduction* or *redox* to describe any reaction that involves the transfer of electrons. Explain that redox reactions are also responsible for generating electric current in a fuel cell. Write the synthesis reaction for water shown below and then explain how it can be split into two half-reactions: an *oxidation* reaction that releases electrons and a *reduction* reaction that accepts electrons.

$$2H_2 + O_2 \rightarrow 2H_2O + \text{energy}$$

Oxidation: $H_2 \rightarrow 2H^+ + 2e^-$

Reduction: $4H^+ + O_2 + 4e^- \rightarrow 2H_2O$

Point out to students that in a balanced redox reaction, the number of electrons produced in the oxidation half-reaction must equal the number accepted in the reduction reaction. Thus, the oxidation reaction above must be multiplied by two. Then the two half-reactions can be added to yield the equation for the synthesis of water from hydrogen and oxygen gases.

INVESTIGATING

Step 2. Explore a computer simulation of a fuel cell.

Note:
Ideally, students will do the computer simulation before working with the physical models. If that is not possible because of a lack of access to computers, the activities can be done in either order.

Have students, ideally in pairs, use the SEPUP Fuel Cell Simulation. Allow students to freely explore the simulation before having them complete the instructions in Part A.

You may also wish to have them explore computer simulations of the internal combustion engine (ICE) cycle used by most automobiles before they answer

Analysis Question 3. These simulations can be found on the student page on the *Hydrogen & Fuel Cells* website at *sepuplhs.org/hydrogen*.

Step 3. Model the redox half-reactions in a fuel cell.

Have students read the introduction and emphasize that anode describes the location where oxidation occurs and cathode describes the location where reduction occurs. Distribute the equipment and have students complete the Procedure.

If your students have had the opportunity to use both the computer model and the physical model, you can have them write about or discuss questions such as: *"Compare the pros and cons of the physical and computer models."* or *"Which did you find most helpful? Explain."*

Sample Responses

Procedure Part A, Questions 2–6

2. *Click on "See Hydrogen Closeup." Write the half-reaction for what happens at the anode. Then write one or more sentences explaining what is happening.*

   At the anode, the following oxidation occurs: $H_2 \rightarrow 2H^+ + 2e^-$. A hydrogen molecule is oxidized, becoming two protons and two electrons.

3. *Click on "See Oxygen Closeup." Write the half-reaction for what happens at the cathode. Then, explain what is happening in your own words.*

   At the cathode, the following reduction occurs: $4H^+ + O_2 + 4e^- \rightarrow 2H_2O$. Oxygen is reduced as it accepts two protons and two electrons to become water.

4. *Click on "See Exchange Membrane." Explain what would happen if the membrane were altered in a way that allowed electrons to pass through (in addition to protons).*

   If electrons could pass through the PEM, then they would not be forced to flow through the circuit, and no electricity would be generated.

5. *Click on "See Electricity Closeup."*

   a. *What keeps electrons flowing through the circuit?*

      The input of hydrogen and its oxidation at the anode maintains the supply of the electrons.

   b. *What could cause the lightbulb to go off?*

      Answers will vary. Students will most commonly answer that if the hydrogen runs out, there will be no more electrons to flow through the circuit. If the PEM became permeable to electrons, current would also end.

6. *Click on "See Exhaust Closeup." Why are fuel cells potentially better for the environment than internal combustion engines?*

   The only exhaust product of a fuel cell is water.

Procedure Part B, Questions 2 and 6

2. *Examine your models. Describe how the bonds in your O_2 and H_2 molecules are represented.*

   The bonds are shown as complementary or matching puzzle pieces.

6. *Using the shapes of the molecular models and the picture of the fuel cell as a guide, create a storyboard of at least four frames depicting the chemical reactions that happen inside a fuel cell to create electricity. Be sure to label all parts as needed.*

   Answers will vary, but storyboards should include the break up of hydrogen into protons and electrons at the anode, the migration of protons through the PEM, the movement of electrons through the circuit, and the reaction of oxygen with protons and electrons to form water at the cathode.

SYNTHESIZING

Step 4. Evaluate the possibility of using fuel cells to replace internal combustion engines on buses.

Ask student groups to share their diagrams of a fuel cell bus with the class. You might consider making these into posters and having each group present their ideas.

SAMPLE RESPONSES AND DISCUSSION OF ANALYSIS QUESTIONS

1. *With your group, draw a diagram of a fuel cell bus on poster paper. Indicate parts, such as hydrogen storage tanks, fuel cell, electric motor, hydrogen and oxygen intakes, the exhaust pipe, and any other necessary parts with clear labels. Try drawing the bus from the side, the top, and the inside. Be prepared to share your diagram with the class.*

   Answers will vary. Diagrams should convey an understanding that:

   a. Hydrogen will have to be stored on the vehicle, and will be fed into the fuel cell anode.

   b. Oxygen will come from the air, and will be fed into the cathode.

   c. The fuel cell will not directly power the bus, but will provide the electricity to drive an electric motor.

   d. The exhaust will be water.

2. *Note that oxygen for fuel cell vehicles is obtained from the surrounding air. Why do you think this is?*

   Oxygen is sufficiently abundant in the air to supply what's needed for the reaction. Carrying pure oxygen on board the vehicle would take up more room, add more weight, and add more cost. Although fuel cells operate more efficiently on pure oxygen, it is more practical and economical to use oxygen from the surrounding air.

3. *Gasoline internal combustion engines release chemical energy through the combustion reaction shown below.*

   $2C_8H_{18} + 25O_2 \rightarrow 18H_2O + 16CO_2 + \text{energy}$

   (heat, light and sound)

   a. *What are the main similarities between the H_2 fuel cell reaction and this internal combustion engine reaction?*

      Both this reaction and what happens in a fuel cell are redox reactions. Both consume oxygen and produce water. They also release energy.

   b. *What are the main differences between the H_2 fuel cell reaction and this internal combustion engine reaction?*

      The oxidation of gasoline occurs through an explosive combustion reaction. The fuel for the internal combustion engine (ICE) reaction is a much larger molecule that includes the element carbon in addition to hydrogen. Because of the presence of carbon in the fuel, carbon dioxide is a product in addition to water. The $\triangle G$ is also larger, which indicates that each mole of fuel consumed in the ICE releases more energy than each mole of H_2 consumed in the fuel cell (but keep in mind that a mole of octane has a much greater mass than a mole of hydrogen).

EXTENSIONS

1. Contrast the chemistry of a fuel cell with the chemistry of a battery. You can learn about the chemistry of a battery in almost any chemistry textbook, or by visiting the student page of the *Hydrogen & Fuel Cells* website at *sepuplhs.org/hydrogen*.

2. Fuel cells are more efficient at converting chemical energy to useful energy than are the internal combustion engines in our automobiles. You can learn more about the properties and operation of internal combustion engines and how they differ from fuel cells by visiting the student page of the *Hydrogen & Fuel Cells* website at *sepuplhs.org/hydrogen*.

Modeling the Fuel Cell Reaction

CHALLENGE

How do the redox reactions in a fuel cell generate electricity?

In the previous activity, Mariyah saw fuel cells in action. Now it's time for her to learn the details about how they work.

In the preceding activity, you used a proton exchange membrane (PEM) fuel cell. This type of fuel cell is already in use in buses, cars, and power generators, and may be widely used in the future. Like a battery, a fuel cell converts chemical energy into electricity. Unlike a battery, a hydrogen fuel cell continues to provide electricity as long as it is supplied with hydrogen and oxygen.

The chemistry of fuel cells has been understood since the 1830s. Like batteries, fuel cells create electricity through chemical reactions that involve the transfer of electrons. Chemists call these reactions **oxidation-reduction**, or **redox**, reactions. Redox reactions can be split into two parts, the oxidation half and the reduction half. Half-reactions that release electrons are called **oxidation reactions**; half-reactions that accept electrons are called **reduction reactions**.

Inside a PEM hydrogen fuel cell, electric current is generated using the two chemical half-reactions shown below.

Oxidation: $H_2 \rightarrow 2H^+ + 2e^-$

Reduction: $4H^+ + O_2 + 4e^- \rightarrow 2H_2O$

These equations can be added to obtain the complete equation. But first the oxidation reaction must be multiplied by two, so that the number of electrons in the reactants balances with the number of electrons in the products.

Oxidation: $2H_2 \rightarrow 4H^+ + 4e^-$

Reduction: $4H^+ + O_2 + 4e^- \rightarrow 2H_2O$

$2H_2 + O_2 \rightarrow 2H_2O + \text{energy}$

Inside the fuel cell are two electrodes. Each electrode has a platinum catalyst that speeds up the redox reaction.

The electrode where oxidation occurs is called the anode. At the **anode**, hydrogen is oxidized and electrons are delivered to an external electrical circuit. In the previous activity, this circuit provided the power that let the electric motor turn the propeller. The electrons travel through this external circuit to the **cathode**. Reduction occurs at the cathode, where oxygen is reduced and the reactants combine to form water.

A proton exchange membrane separates the two electrodes. This membrane conducts protons through to the cathode, but blocks electron transport. Electrons are forced to flow through an external circuit and generate current. At the cathode, these protons join in the reduction reaction to form water.

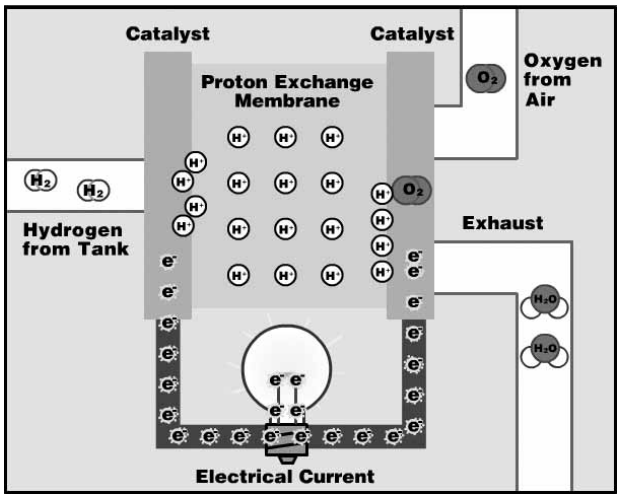

Since we can't see the electric current or the chemical reactions inside a fuel cell, using models and computer simulations can help us understand what is happening.

MATERIALS

For each group of two students

fuel cell molecular modeling set (11 pieces)

computer with access to SEPUP Fuel Cell Simulation

PROCEDURE

PART A: COMPUTER SIMULATION OF A FUEL CELL

1. The simulation of a fuel cell is available at the student page of the *Hydrogen & Fuel Cells* website at *sepuplhs.org/hydrogen*. Open the simulation on your computer screen and view the entire process. After clicking on "See Catalyst" and "See Exhaust Closeup," click "Run Animation" and discuss the following with your partner or group.

   a. Identify the anode and the cathode.

   b. Describe what happens to the hydrogen and oxygen.

   c. Explain how water gets generated at the exhaust port.

2. Click on "See Hydrogen Closeup." Write the half-reaction for what happens at the anode. Then write one or more sentences explaining what is happening.

3. Click on "See Exhaust Closeup." Write the half-reaction for what happens at the cathode. Then, explain what is happening in your own words.

© 2011 REGENTS OF THE UNIVERSITY OF CALIFORNIA

4. Click on "See Exchange Membrane." Explain what would happen if the membrane were altered in a way that allowed electrons to pass through (in addition to protons).

5. Click on "See Electricity Closeup."

   a. What keeps electrons flowing through the circuit?

   b. What could cause the lightbulb to go off?

6. Click on "See Exhaust Closeup." Why are fuel cells potentially better for the environment than internal combustion engines?

PART B: MODELING THE FUEL CELL REACTION

1. Working with a partner, use the appropriate pieces of the modeling set to build two hydrogen gas (H_2) molecules and one oxygen gas (O_2) molecule. In your notebook, draw each molecule.
2. Examine your models. Describe how the bonds in your O_2 and H_2 molecules are represented.
3. Place the two H_2 molecules on the anode side of the fuel cell diagram and the O_2 molecule on the cathode side.
4. Model the break up of H_2 at the anode. Move the broken pieces along the appropriate paths on the fuel cell diagram. Electrons should go through the circuit with the lightbulb. The protons pass through the membrane.
5. Model the creation of water at the cathode. In your notebook, draw one of the two water molecules that are created.
6. Using the shapes of the molecular models and the picture of the fuel cell as a guide, create a storyboard of at least four frames depicting the chemical reactions that happen inside a fuel cell to create electricity. Be sure to label all parts as needed.

© 2011 REGENTS OF THE UNIVERSITY OF CALIFORNIA

ANALYSIS QUESTIONS

1. With your group, draw a diagram of a fuel cell bus on poster paper. Indicate parts, such as hydrogen storage tanks, fuel cell, electric motor, hydrogen and oxygen intakes, the exhaust pipe, and any other necessary parts with clear labels. Try drawing the bus from the side, the top, and the inside. Be prepared to share your diagram with the class.

2. Note that oxygen for fuel cell vehicles is obtained from the surrounding air. Why do you think this is?

3. Gasoline internal combustion engines release chemical energy through the combustion reaction shown below. Octane (C_8H_{18}) is a major constituent in gasoline.

$$2C_8H_{18} + 25O_2 \rightarrow 18H_2O + 16CO_2 + \text{energy (heat, light, and sound)}$$

   a. What are the main similarities between the H_2 fuel cell reaction and this internal combustion engine reaction?

   b. What are the main differences between the H_2 fuel cell reaction and this internal combustion engine reaction?

© 2011 REGENTS OF THE UNIVERSITY OF CALIFORNIA