Final Report
"Solid Oxide Fuel Cell Development for Auxiliary Power in Heavy Duty Vehicle Applications"

Award Number: DE-FC36-04GO14319

Submitted By: Delphi Automotive Systems, LLC

Project Period: September 1, 2004 thru April 30, 2010

Working Partners:

Volvo Trucks North America, Mack Powertrain
7900 National Service Road
Greensboro, NC 27402-6115

PACCAR Inc.
777 106th Ave. NE
Bellevue, WA 98004

Electricore, Inc.
27943 Smyth Dr, Suite 105
Valencia, CA 91355

Administrative POC: Kyle Morris
Program Manager
Phone: 661-607-0288
Fax: 661-607-0264
Email: kyle@electricore.org

Technical POC: Daniel T. Hennessy
Chief Engineer
Phone: 248-732-0793
Email: daniel.t.hennessy@delphi.com

DOE Managers:
DOE HQ Technology Manager: Donna Ho
DOE Fuel Cells Technology Program
1000 Independence Ave., SW
Washington, DC 20585
Phone: 202-586-8000
Email: Donna.Ho@ee.doe.gov

DOE Field Project Officer : David Peterson, Ph.D.
DOE Golden Field Office
1617 Cole Blvd, Golden, CO 80401
Phone: 303-275-4956
Fax: 303-275-4753
Email: david.peterson@go.doe.gov

Table of Contents

Distribution authorized to U.S. Government Agencies only, so as to protect information no owned by the U.S. Government and protected by the recipient's "limited rights" statement. Other request for this document shall be referred to DELPHI.

1.0 EXECUTIVE SUMMARY: 3
2.0 INTRODUCTION: 4
3.0 PROJECT OBJECTIVE: 4
4.0 PROJECT GOALS: 4
5.0 PROJECT APPROACH: 4
6.0 FINDINGS / RECOMMENDATIONS: 12
7.0 TASK REVIEW / SUMMARY: 14
7.1 TASK 1.1 - REVIEW OF PROJECT PLAN AND DEVELOPMENT SCHEDULE 14
7.2 TASK 1.2 - DEFINE APPLICATION REQUIREMENTS WITH OEM INPUT 14
7.3 TASK 1.3 - PHASE 1 REVIEW MILESTONE: REQUIREMENTS REVIEW 14
7.4 TASK 2.1 – DEVELOP APU SYSTEM MECHANIZATION CONCEPTS 15
7.5 TASK 2.2 – DEVELOP THE APU SYSTEM REQUIREMENTS DOCUMENT 16
7.6 TASK 2.3 – TWELVE MONTH DOE REVIEW CRITICAL DECISION 17
7.7 TASK 2.4 – APU DESIGN AND LAYOUT 18
7.8 TASK 2.5 – DEVELOP SUBSYSTEM REQUIREMENTS DOCUMENT & DEVELOP PLAN 19
7.9 TASK 2.6 – SOFC APU HARDWARE DESIGN AND BUILD 27
7.10 TASK 2.7 – SUBSYSTEM TEST FIXTURE HARDWARE BUILD 29
7.11 TASK 2.8 – SUBSYSTEM TESTING AND DEVELOPMENT ITERATIONS 29
7.12 TASK 2.9 – DOE CRITICAL DECISION MILESTONE #3 36
7.13 TASK 2.10 – SYSTEM MODULE TESTING AND DEVELOPMENT 36
7.14 TASK 2.11 – PHASE 2 REVIEW 36
7.15 TASK 3.1 – FULL APU SYSTEM TESTING AND DEVELOPMENT 36
7.16 TASK 3.2 –APU SYSTEM LABORATORY DEMONSTRATION WITH SIMULATED LOAD CYCLES 37
7.17 TASK 3.3 –FINAL REPORTS AND PRESENTATIONS 42
8.0 PATENTS: 42
9.0 PUBLICATIONS / PRESENTATIONS: 42
10.0 TABLE OF FIGURES: 43

1.0 Executive Summary:

Changing economic and environmental needs of the trucking industry is driving the use of auxiliary power unit (APU) technology for over the road haul trucks. The trucking industry in the United States remains the key to the economy of the nation and one of the major changes affecting the trucking industry is the reduction of engine idling.

Delphi Automotive Systems, LLC (Delphi) teamed with heavy-duty truck Original Equipment Manufacturers (OEMs) PACCAR Incorporated (PACCAR), and Volvo Trucks North America (VTNA) to define system level requirements and develop an SOFC based APU. The Delphi team enlisted Electricore, Inc. to serve as administrative manager for the project.

The project defines system level requirements, and subsequently designs and implements an optimized system architecture using an SOFC APU to demonstrate and validate that the APU will meet system level goals. The primary focus is on APUs in the range of 3-5 kW for truck idling reduction. Fuels utilized were derived from low-sulfur diesel fuel.

Throughout this program Delphi and its OEM partners PACCAR and Volvo Trucks North America (VTNA) held meetings to review and develop a project plan and schedule to establish a time line and project cost as outlined in the proposal. The meetings began with a review of what Delphi has identified as key areas of collaboration with the truck OEM's. Throughout this program, Delphi furthered the development of their Solid Oxide Full Cell (SOFC) stack design under the SECA program. Delphi continued the development of their Generation 3 stack technology and initiated the Generation 4 stack design that will be the primary energy source for the new designed APUs. Key areas of study and development included sulfur remediation with reformer operation; stack sensitivity testing; testing of catalyst carbon plugging and combustion start plugging; system pre-combustion; and overall system and electrical integration.

This development, once fully implemented and commercialized has the potential to significantly reduce the approximately 1 Billion gallons of fuel idling Class 7/8 trucks consume by upwards of 2/3 to 3/4. In addition, the significant amounts of NOx, CO2 and PM that are produced under these engine idling conditions will be virtually eliminated, inclusive of the noise pollution. The environmental impact will be significant with the added benefit of fuel savings and payback for the vehicle operators / owners with jobs being created in a green technology area.

2.0 Introduction:

Delphi Automotive Systems, LLC (Delphi) has teamed with heavy-duty truck Original Equipment Manufacturers (OEMs) PACCAR Incorporated (PACCAR), and Volvo Trucks North America (VTNA) to define system level requirements and develop an SOFC based APU. The Delphi team has enlisted Electricore, Inc. to serve as administrative manager for the project.

The project defines system level requirements, and subsequently designs and implements an optimized system architecture using an SOFC APU to demonstrate and validate that the APU will meet system level goals. The primary focus is on APUs in the range of 3-5 kW for truck idling reduction utilizing road grade low sulfur diesel fuel.

3.0 Project Objective:

To demonstrate in a laboratory environment, an SOFC APU capable of operating on low sulfur diesel fuel for the Commercial Trucking Industry. To that end the following sub-objectives were defined:

1. Develop APU system requirements and concepts with major truck OEMs input.
2. Design, develop and test the needed subsystems for the approved concept.
3. Build and demonstrate a diesel fueled truck APU system to the DOE.

4.0 Project Goals:

- Leverage Delphi's technology leadership, and investment in SOFC technologies to meet APU commercial trucking application requirements.
- Design requirements for the vehicle applications will be studied with OEM Partners PACCAR / VTNA and APU requirements document developed.
- Design, build, and laboratory test, an SOFC based APU system running on diesel fuel, for commercial heavy-duty truck applications for reduction of primary engine idling.
- Integration of the APU system with a commercial truck will be investigated, (however integration is not within the scope of the program).

5.0 Project Approach:

The Program was structured around 3 phases of development (**See Figure 5.0-1**):

1. Phase 1: OEM Input Collection (Requirements)
    a. Delphi worked with PACCAR and VTNA to understand the APU demands from the OEM point of view
    b. Information was collected and compiled into our SSTS (System / Subsystem Technical Specification or house of quality)

2. Phase 2: Design / Build / Develop at Delphi (Function)
    a. Final concept and design kick-off
    b. Design and component verification period.
    c. Brass-board system: Build and test.
3. Phase 3: System Integration and Testing / Demo (Form)
    a. System development with OEM input for test planning develops and implements "real-world" load profiles.

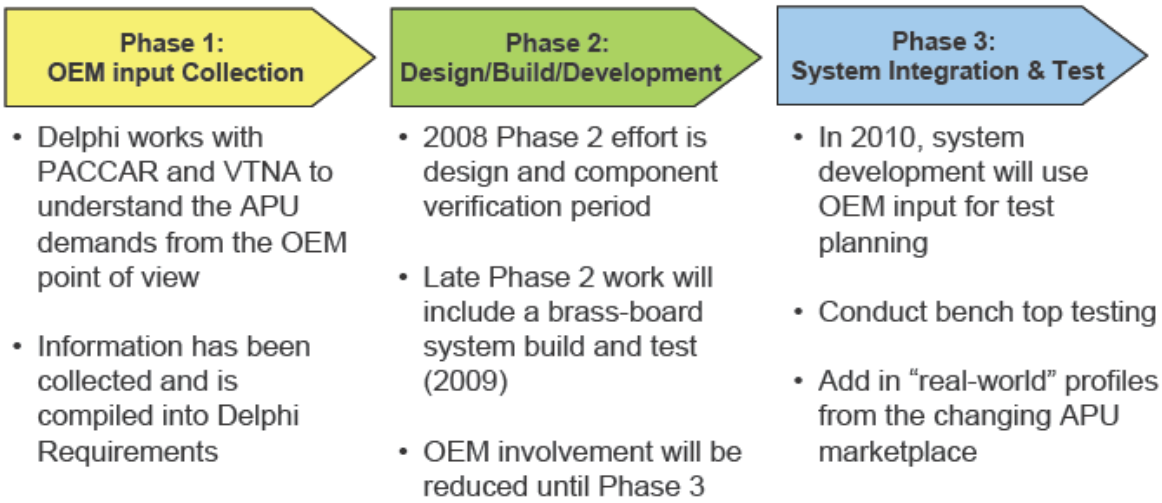

Figure 5.0-1: Project Approach

During phase 1, key areas of collaboration with OEM's included: Performance and functionality requirements (power output, durability, response times, expected loads); Vehicle operating environment requirements (NVH, temperature, fuel quality, exposure); Electrical integration and mounting options for selected vehicles; APU physical requirements (allowable mass, volumes, connection locations). Also included were: Efficiency requirements at peak power and over usage cycles; Regulatory issues (exhaust emissions, noise, safety, etc.); and Maintenance and service interval issues. The result was the Delphi "House of Quality" document **(see Figure 5.0-2**).

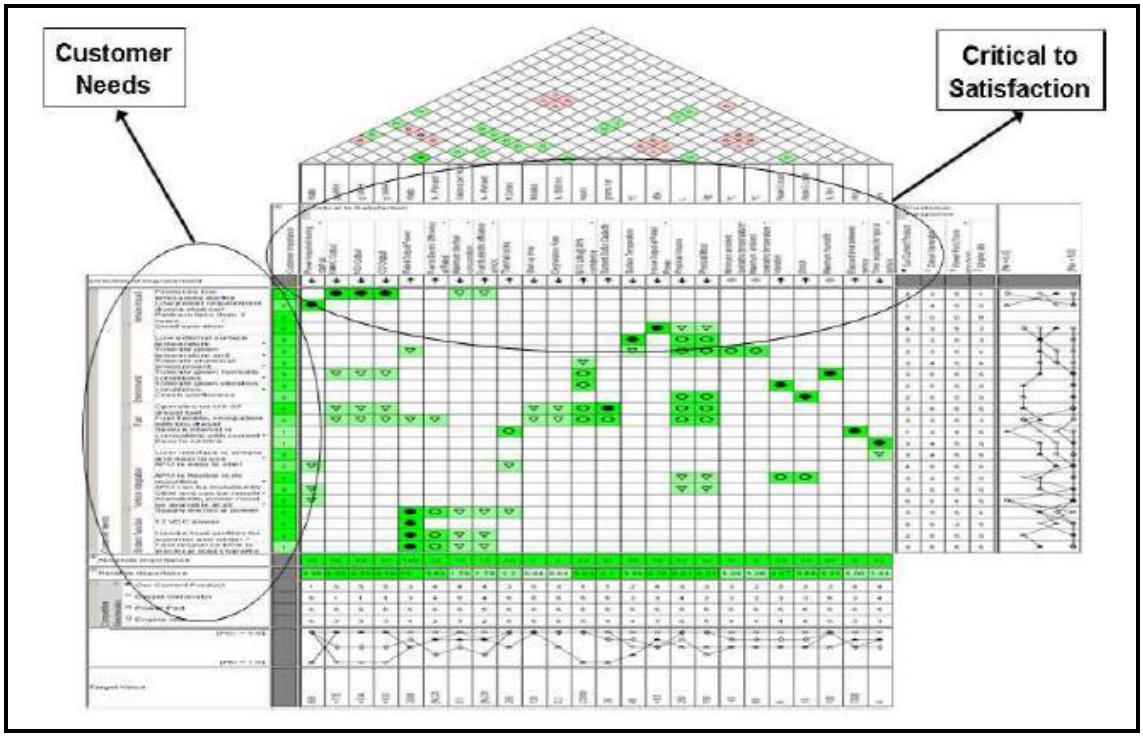

Figure 5.0-2: House of Quality (Voice of Customer)

By combining the customer information into the customer needs verses the items critical to customer satisfaction (**Figures 5.0-3 and 5.0-4**), the basics of the System Requirements document was formulated. The output is shown in **Figure 5.0-5**. In order to accomplish this task, meetings were held with OEMs PACCAR and VTNA at their technical facilities to develop the requirements definition. Delphi obtained OEM specifications for vehicle environmental and operational requirements. The specific list of electrical loads that would be powered from the SOFC APU was developed with potential on-vehicle locations for the APU identified and associated package dimensions for the SOFC APU. Afterwards the electrical power interfaces to the vehicle electric power bus was determined. Also captured were the maintenance intervals and durability requirements for SOFC APU. From here, the SOFC APU subsystem technical specifications were developed.

1. Produces low emissions during operation
2. Low power requirement during start-up
3. Payback less than 2 years
4. Quiet operation
5. Low external surface temperature
6. Tolerate given temperature and pressure conditions
7. Tolerate chemical environment
8. Tolerate given humidity conditions
9. Tolerate given vibration conditions
10. Crash worthiness
11. Operates on US-07 diesel fuel
12. Fuel flexible, compatible with bio-diesel
13. Service interval is compatible with current maintenance cadence
14. Easy to service
15. User interface is simple and easy to use
16. APU is easy to start
17. APU is flexible in its mounting
18. APU can be installed by OEM and can be retrofit through aftermarket installation
19. Availability, power must be available at all locations

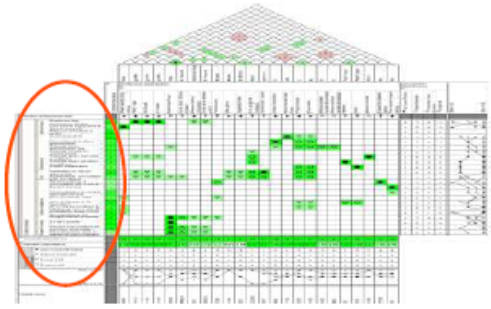

Figure 5.0-3: Customer Needs (Left side)

1. Power required during start-up
2. NMHC Output
3. NOx Output
4. CO Output
5. Rated Output Power
6. Fuel to Electric Efficiency at Rated
7. Maximum Idle fuel consumption
8. Fuel to electric efficiency at NOC
9. Thermal cycles
10. Start-up time
11. Degradation Rate
12. B-10 Life @ 90% confidence
13. Sorbent Sulfur Capacity
14. Surface Temperature
15. Noise Output at Rated Power
16. Physical Volume
17. Physical Mass
18. Minimum ambient operating temperature
19. Maximum ambient operating temperature

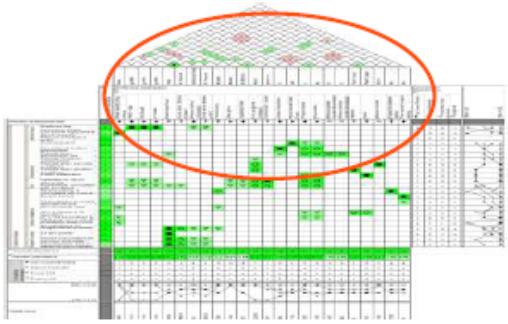

Figure 5.0-4: Critical to Satisfaction (Top side)

SOFC System Requirements

Rev Date

Revisions / Model EWO

Requirement	*Definitions*	*Test Conditions\Criteria*	
SUBSYSTEM PARTITIONING	**Reference subsystem partitioning tree diagram**	N/A	—
SYSTEM MECHANIZATION	**Main Process Flow and Electrical Architecture to be used for the system**	N/A	—
DAMAGE STATES			
Damaged Condition State 1	Desired system state transitions are unable to occur due to faults or failures.	Desired system state transitions are unable to occur due to faults or failures.	—
Damaged Condition State 2	POWER OUTPUT* at the specified operating level degrades beyond allowable percentage at nominal levels of Physical and Electrical input for more than 5 minutes.	POWER OUTPUT* at the specified operating level degrades beyond allowable percentage at nominal levels of Physical and Electrical input for more than 5 minutes.	Degrade %
Damaged Condition State 3	Values of leak rate are not met.	Measure with combustible gas and CO gas detector at RATED POWER* over 15 minute period in unventilated enclosure with a max volume not to exceed 8 cubic meters. Do not exceed concentrations specified with any detectors.	PPM
PHYSICAL INPUTS			
FUEL SPECIFICATION	Primary Fuel to be used by the system for operation	N/A	—
FUEL SULFUR LEVEL			
Gravimetric analysis	Maximum concentration of sulfur in Primary Fuel*	Per certified analysis from fuel supplier	ppmw
Volumetric analysis	Maximum concentration of sulfur in Primary Fuel*	Per certified analysis from fuel supplier	ppmv
FUEL SUPPLY PRESSURE	Line static pressure (gauge) of fuel supply	measured at system connection	kPa
AMBIENT AIR PRESSURE	Absolute ambient (environmental) pressure during operation	System design operating envelope (for reference only)	kPa (@ alt)
	Absolute ambient (environmental) pressure in transport or storage	System design storage envelope (for reference only)	kPa (@ alt)
AMBIENT AIR TEMPERATURE / HUMIDITY	Air temperature at System Air Inlet during operation	System design operating envelope (for reference only)	°C / %RH
	Air temperature at System Air Inlet in transport or storage	System design storage envelope (for reference only)	°C
VIBRATION			Peak g load
SHOCK			Peak g load

Figure 5.0-5: System Requirements Document (Example)

Phase 2 began with the roll down of system requirements to the subsystem teams to develop the component / subsystem specific requirements. The major subsystems identified were: SOFC stack, reformer, integrated heat exchanger (IHEX), desulfurizer, integrated component manifold (ICM), High Power Distribution Module (HPD), controllers, bussed electrical center (BEC) / Harness, insulation system, processed air delivery system (PADS), recycle pump assembly, fuel system, APU enclosure, reformer air fuel module (RAFM), and anode protection system (APS). The subsystems were packaged per the system requirements document based on Delphi's currently available Stationary Power Unit (SPU) 1E (**See Figure 5.0-6**) modified to the new system mechanization **(See Figure 5.0-7**). The new SOFC diesel APU (DPS3000D) was then modeled based on the most current stack and available subsystem data. The results

indicated that we had a configuration that should be capable of 3.5 kW net and 30% efficiency (**See Figure 5.0-8**),

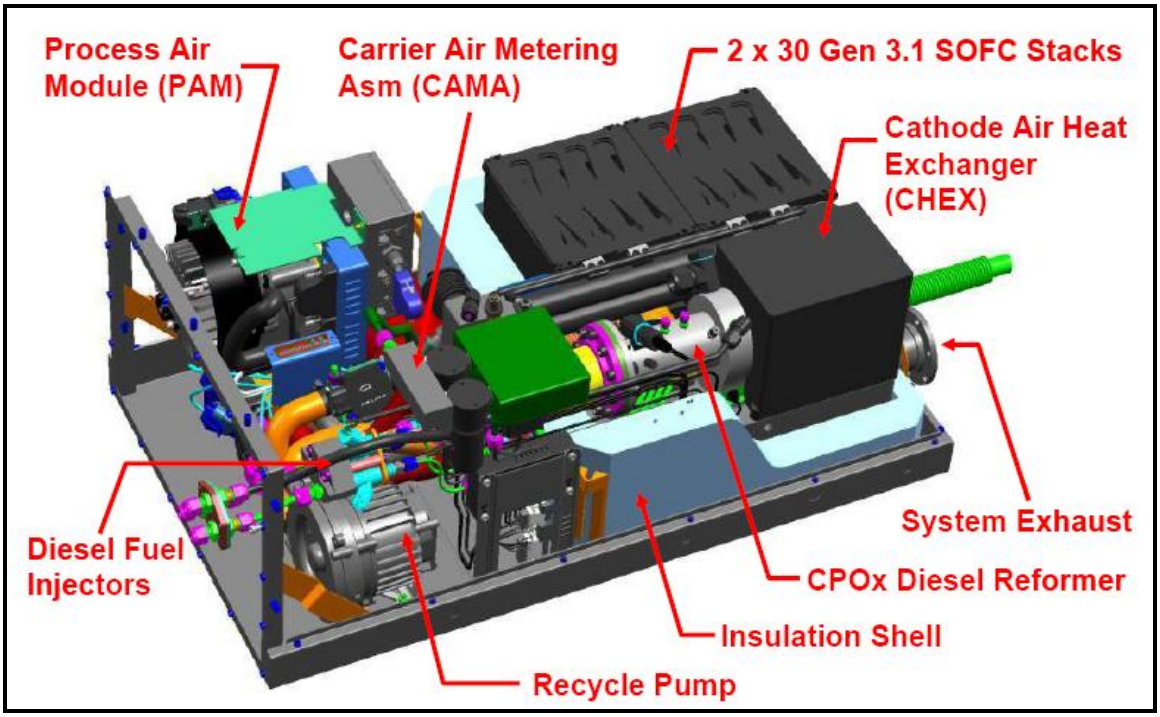

Figure 5.0-6: SPU 1E

Figure 5.0-7: SOFC Diesel APU Model Mechanization

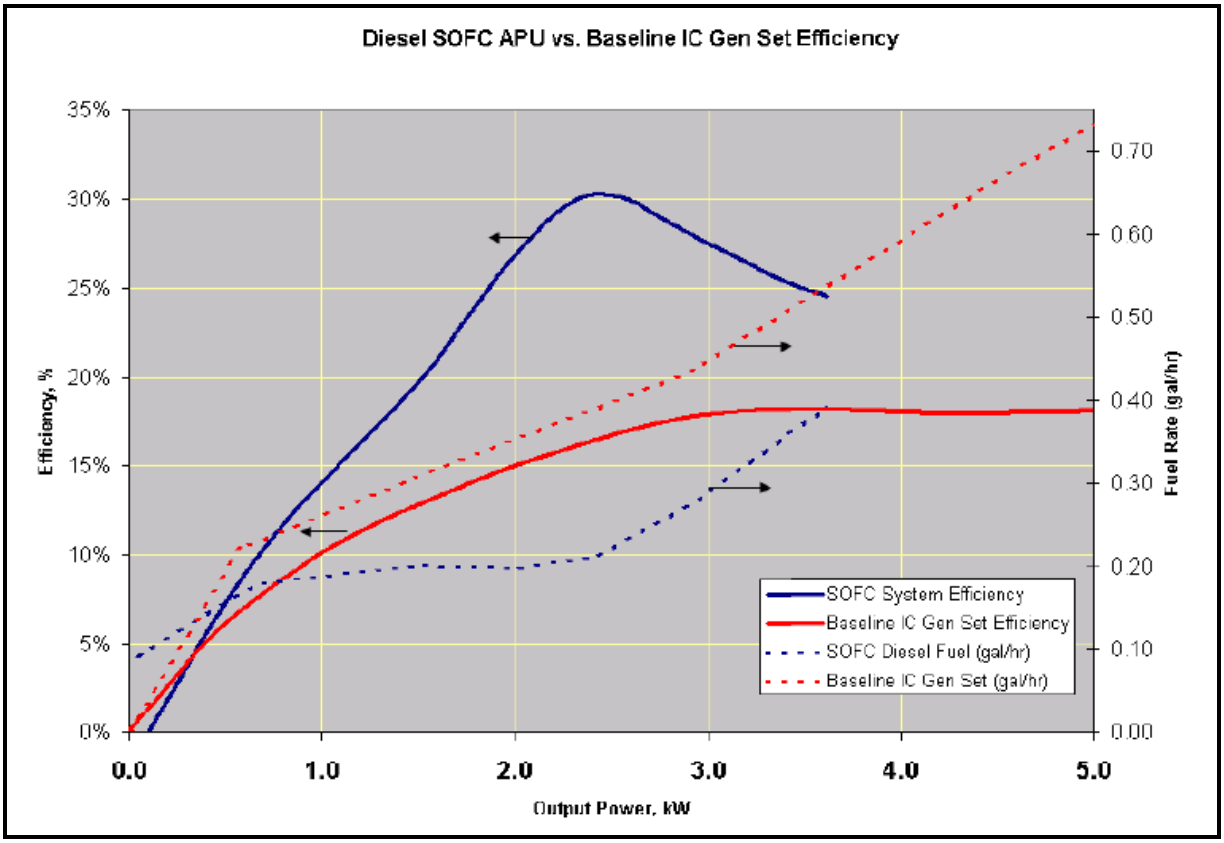

Figure 5.0-8: Diesel SOFC APU Model Results

The subsystem summary information is found in the Task Summary / Review (**Section 7.0**). Prior to the build and test of the new DPS3000D level "A" system design being complete, Delphi ran several on vehicle test using modified SPU 1E design level units. These test / demonstrations were held at customers' technical facilities. In addition, during this period, the Truck Load Profile was developed and refined with OEM assistance (**See Figure 5.0-9**). This information was then analysis using Crystal Ball (**See Figure 5.0-10**) to refine system operating points and effectively.

Phase 3 included initial system runs for calibrating the unit, developing the running mode operating points and basic shake down of the APU system. After first run hardware was procured and fitted, project team studies were implemented to develop mass reduction and cost reduction strategies for the next iteration of the "A" level APU design. The system was also "fitted" to a vehicle and initial vibration analysis / testing was performed. The test results are included in the Task Summary / Review below (**Section 7.0**).

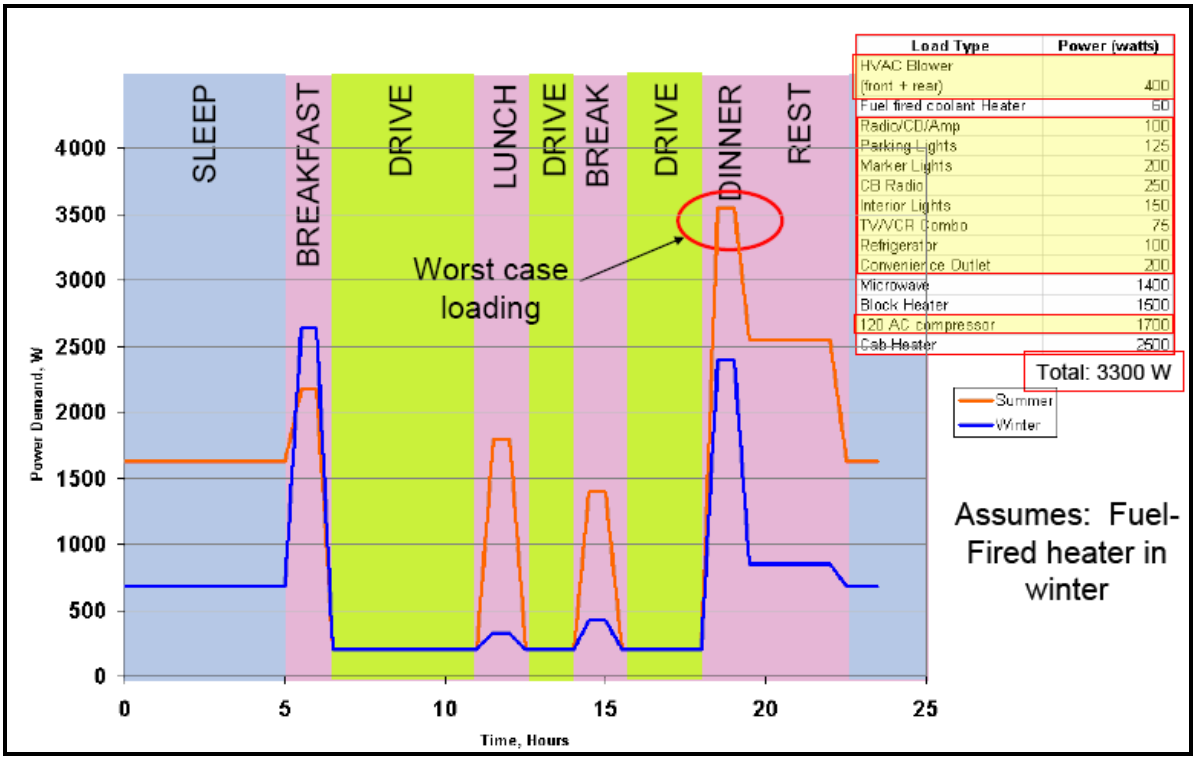

Load Type	Power (watts)
HVAC Blower (front + rear)	400
Fuel fired coolant Heater	60
Radio/CD/Amp	100
Parking Lights	125
Marker Lights	200
CB Radio	250
Interior Lights	150
TV/VCR Combo	75
Refrigerator	100
Convenience Outlet	200
Microwave	1400
Block Heater	1500
120 AC compressor	1700
Cab Heater	2500

Figure 5.0-9: Class 8 Truck Load Profile

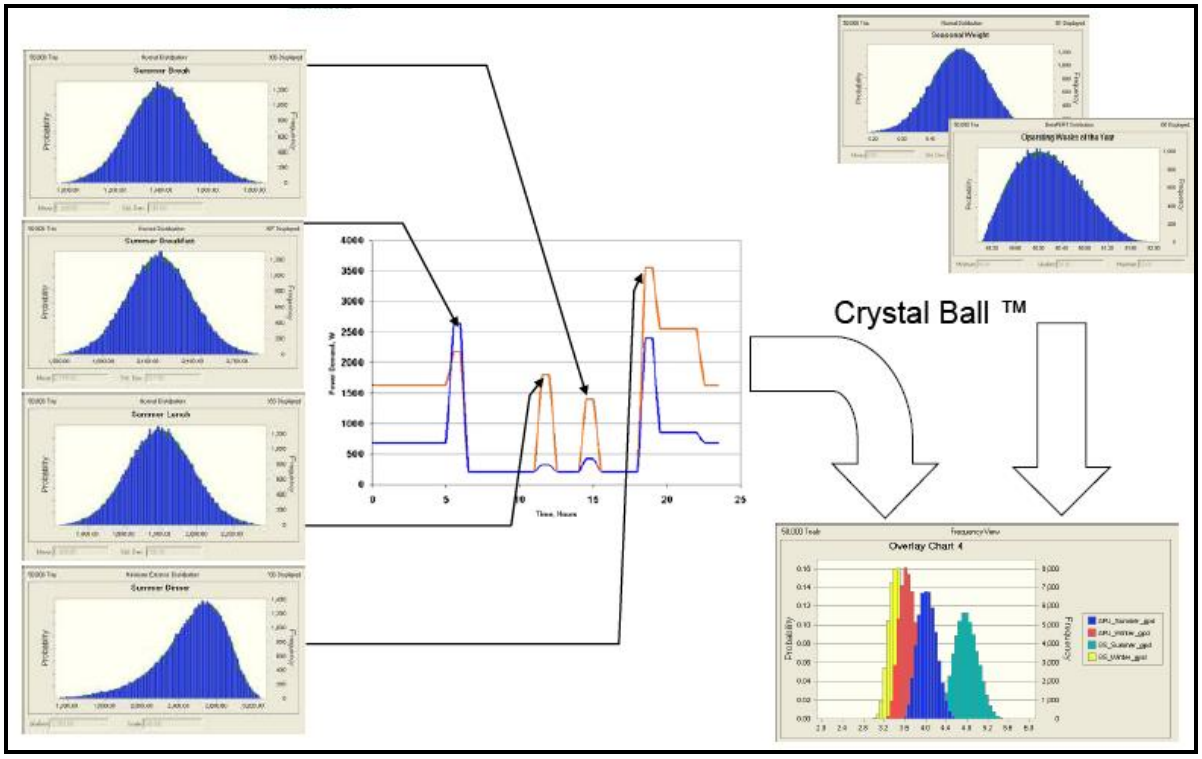

Figure 5.0-10: Crystal Ball analysis of the Truck Load Profile

6.0 Findings / Recommendations:

The testing performed and evaluated during the life of this program demonstrated an encouraging potential of this technology to meet the application requirements. A final full APU system testing phase was performed. During this phase Delphi performed twenty-two full thermal cycles on ULSD, twenty nine ULSD fuel starts with an additional 160 total hours of operation. Delphi focused on complete system "Turn-Key" starts, and repeated cool-downs to approximately ~450°C, at which time the APU was allowed to "fly down" to ambient temperature. See **Figure 6.0-1** for the thermal cycling system build, APU build #1 (Set 1). Testing identified IHEX issues that were then corrected prior to the simulated load cycles testing (**See Task 3.2**).

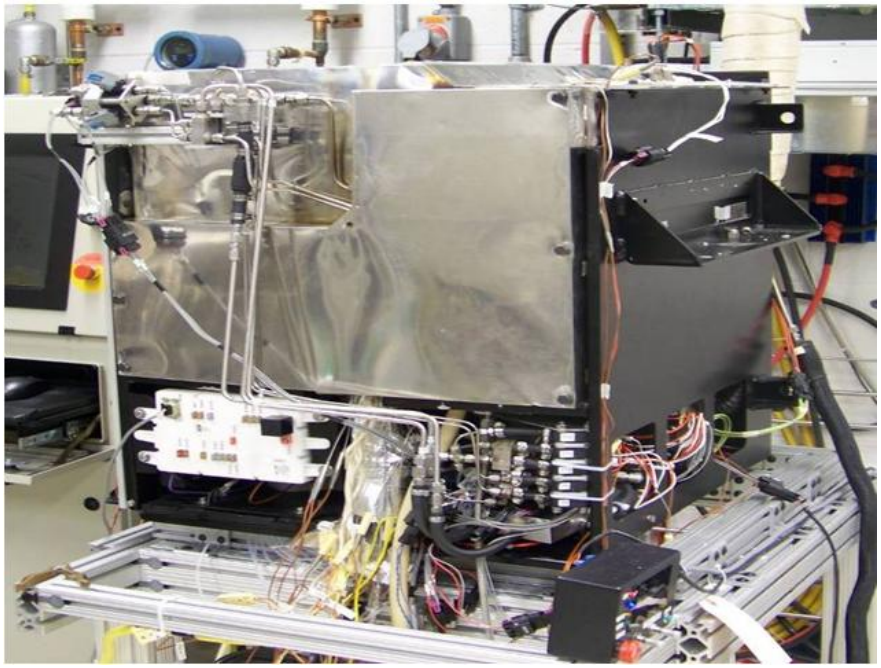

Figure 6.0-1: DPS3000 Set 1 (Thermal Cycle System)

Delphi simulated run conditions with thermal stacks by creating simulated anode tail gas, injecting air inside the thermal stacks, thereby simulating transfer of oxygen molecules across the cell membrane. By doing this, Delphi was able to perform more thorough system shakedowns, including load cycles without electrochemical (EC) stacks. Delphi was then able to exercise a recycle loop with electronics and application side support, verifying 85% of the system performance and operation.

Delphi also performed full simulated load cycles with EC stacks, pulled power during cycle testing, monitored stack cell voltages, performed five ultra low sulfur diesel (ULSD) starts and two additional full thermal cycles. Furthermore, an initial Natural Frequency Sweep was performed, which initiated a redesign of the APU chassis system and modification of several subsystems mounting hardware. The Enclosure exit air

temperature was established at ~50°C, which also met requirements. These activities were done in conjunction with the fitment of APU Set 3 to a class 8 vehicle that was later operated on the Peterbuilt class 8 truck providing power for hotel loads using ULSD (**See Figure 6.0-2 and 6.0-3**).

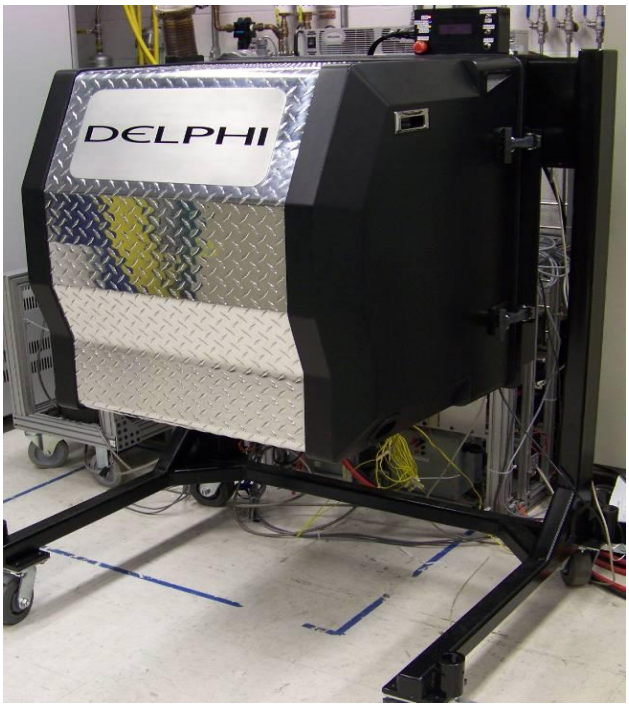

Figure 6.0-1: DPS3000D Set 3

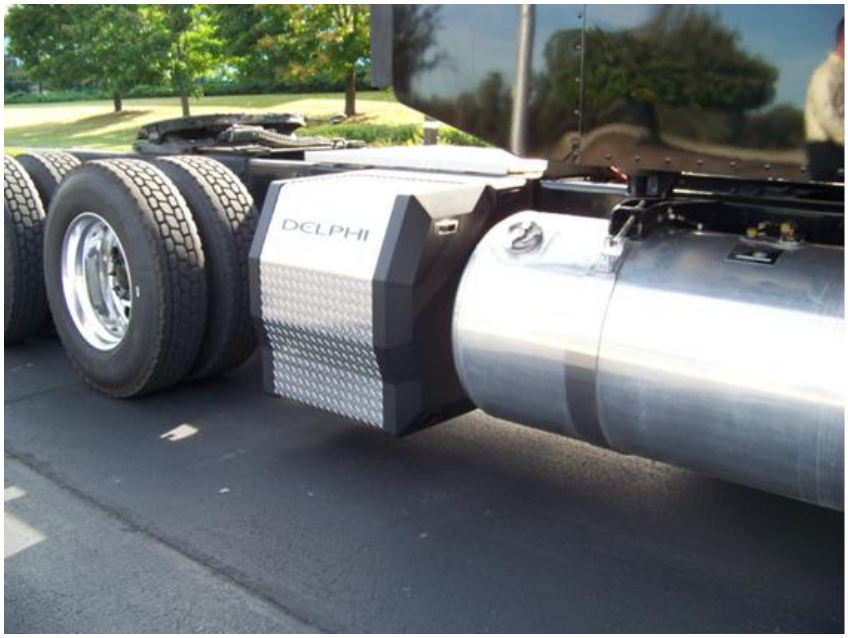

Figure 6.0-3: DPS3000D on Vehicle

7.0 Task Review / Summary:

7.1 Task 1.1 - Review of Project Plan and Development Schedule

Delphi and their OEM partners, PACCAR and Volvo Trucks North America (VTNA), held several meetings to develop and review the Project plan and schedule in order to meet the program timing and funding as outlined in the Proposal. Also Included in the meetings, were reviews of the Statements of Project Objectives (SOPO), Work Breakdown Structure (WBS), resources, and submission of Purchase Orders.

Separate meetings were held with both PACCAR 12-2-04, and VTNA 12-3-04 on the work breakdown structure (WBS) and overall timing and schedule.

- The meetings reviewed what Delphi identified as key areas of collaboration with the truck OEM's, which included:

  1. APU mass and packaging constraints
  2. Environmental - vehicle environment (NVH, temperature, collision, etc.)
  3. Functionality requirements
  4. Mounting concepts
  5. System Efficiency (targeted)
  6. Emissions
  7. Maintenance / Durability

7.2 Task 1.2 - Define Application Requirements with OEM Input

- Meeting dates were set for January 24th-25th, for VTNA, and January 26th –27th, of 2005 for PACCAR. The purpose of these meetings was to begin Requirements development for SOFC APU for the Commercial Trucking Industry.
- Delphi was given supplier access to PACCAR's documentation network, allowing Delphi to review requirements for mechanical and electrical components for chassis and cab mounted systems.
- VTNA forwarded preliminary requirements for chassis and cab-mounted electronics and was reviewed by Delphi Systems Engineering prior to onsite meeting.
- A document for the purpose of requirements was developed and edited for content. The document was the basis of a Subsystem Technical Specification (STS) that was required by Delphi's internal Technology Development Process (TDP). The document was forwarded to both PACCAR and VTNA prior to the visit to both companies scheduled for the week of January 24th, 2005 as described above.

7.3 Task 1.3 - Phase 1 Review Milestone: Requirements Review

7.3.1 Program Management

The following items were accomplished during this reporting period:

1. Developments of Project Resource plan and program resources were identified.
2. Development of Work Plan related to resources and schedule.
3. Development of financial tracking and setup of contract charge numbers and cross-charge strategy.
4. Monthly Contractor Cost Reports were submitted.
5. On November 17, 2004 Delphi hosted the DOE in Rochester, New York to formally kick-off the program. Meeting included: Review of deliverables, Major Project Timing (Milestone and Critical Dates), and Statement of Work discussions.
6. Initial meetings were held to discuss OEM statement of work and kickoff meetings between Delphi and OEM technical staff.
7. Development of Quarterly report format and delivery cadence was completed.

7.4 Task 2.1 – Develop APU System Mechanization Concepts

The vehicle system concepts made steady progress but the interest of a Combined Heat and Power (CHP) system methodology gained interest by the truck OEMs in order to combine hardware and provide more features to the operator / user in the truck. The efforts considered the recovery of Auxiliary Power Unit waste heat into a liquid coolant loop in the vehicle. This could then be used to cabin heat, block heat and oil heat a truck in cold climates.

The progress to date had been a series of mechanizations and vehicle schematics by Vehicle Systems Engineering that were being reviewed by all for validity and benefit to the truck operator and for system viability. System efficiency was a parameter that was under scrutiny to better understand the trade-offs involved in electrical and thermal energy generation, especially at low electrical power conditions that may not have had adequate thermal power for the coolant system.

Potential APU system mechanizations based on VTNA input were submitted to VTNA for review. A web meeting was conducted between Delphi and VTNA on 29 April 2005 to review the proposed system mechanizations. VTNA requested additional information on the possible recovery of waste heat for cab and powertrain heating.

Potential APU system mechanizations and 24-hour APU usage timelines were submitted to PACCAR for review. PACCAR provided Delphi with documentation on potential vehicle hotel loads and current vehicle engine idling practices. This data was obtained from UC Davis and provided insight into existing vehicle hotel loads. Information showed a wide range of operation, from no idling to 11 hours a day.

Delphi revised and refined the potential APU System mechanizations and associated 24-hour electric power utilization tables for the program OEM partners. These revisions were presented to the OEM partners in July 2005 and were updated based on the feedback received from the OEM representatives. Delphi obtained OEM approval for the recommended mechanization on 15 August 2005.

System Engineering continued working with Marketing to develop a more detailed value analysis proposition for the commercial truck product. This included factors such as:

- Required manufactured cost
- Payback period projections for various user situations

7.5 Task 2.2 – Develop the APU System Requirements Document

The System Requirements Document was completed following the completion of the truck OEM input. Each OEM provided an Auxiliary Power Unit requirements document that was the basis and record of their input to the project. A comprehensive Delphi requirements document was generated from these and was also to accommodate other markets and strategies that were identified as key elements of the business and product plan.

Delphi focused on the common format for the North American truck market for this program and the power / loads required by the Class 8 Sleeper Cabin vehicles. DC / AC conversion is dependent on market and intended load, for example:

- 120 VAC single phase 60 Hz
- 230 VAC single phase 50 Hz
- High Voltage / Multi-phase AC loads (custom power)

Based on input from Delphi's OEM partners, a proposed vehicle electrical connection system was developed. **Figure 7.5-1** is a diagram of the vehicle electrical connection system.

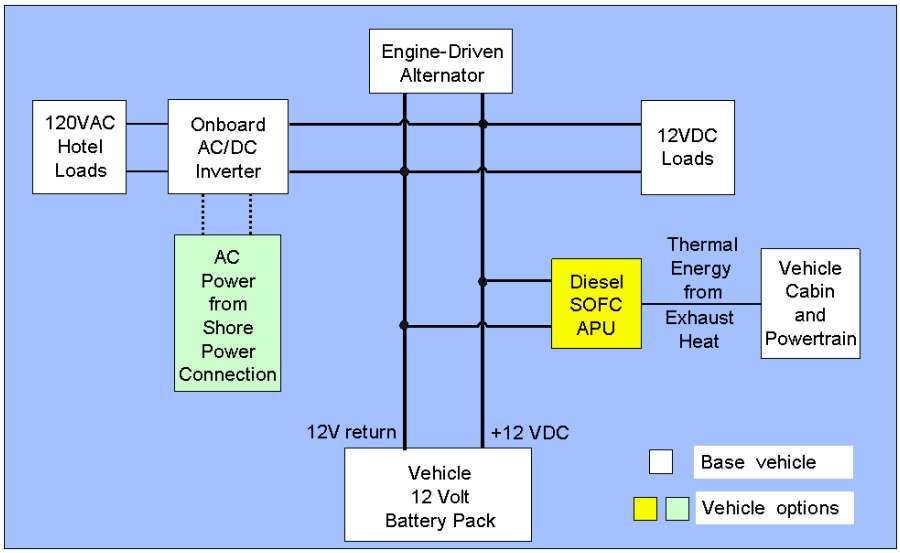

Figure 7.5-1: Vehicle Electrical Architecture

Truck OEM partners suggested diesel fuel per ASTM D975, Ultra Low Sulfur Diesel (ULSD), Grade No. 2-D S15 current version (this is 2006+ 15 ppm sulfur level diesel for On-Road vehicles) for the APU. The sulfur level in this fuel was the primary system design concern for Delphi's SOFC. Delphi planned for an internal sulfur management system that would work for this sulfur level. Increased stack sulfur tolerance was a long-term development goal for the SOFC APU program.

Additional work was conducted to determine viable location options for the SOFC APU on Class 8 vehicles. Three locations offered the best possibilities:

- Rear Side Frame Rail Mount (left or right outside frame rail)
  - Largest packaging volume (approx 125 Liter)
  - High vibration requirements
  - Severe package protection requirements
  - High risk integration for typical fuel-fired cabin heat exchanger function
  - Prefer left side to locate APU near typical battery box and engine starter

- In-Cab Mount (in sleeper cab / under bunk location)
  - Available packaging volume (approximately 125+ Liter)
  - Low vibration requirements
  - Low package protection requirements
  - Low risk integration for typical fuel-fired cabin heat exchanger function

- Rear Frame Top Mount (rear / outside sleeper cab)
  - Lowest packaging volume (approx 65 Liter)
  - Medium vibration requirements
  - Medium package protection requirements
  - Medium risk integration for typical fuel-fired cabin heat exchanger function

Composite critical parameters were completed. These were based on feedback from Truck OEM partners.

7.6 Task 2.3 – Twelve Month DOE Review Critical Decision

Formal presentation was prepared and submitted November 10, 2005 by way of a teleconference meeting with DOE personnel.

Program was structured around 3 phases of development:

- Phase 1: OEM Input Collection (REQUIREMENTS)
  - Delphi has been working with PACCAR and VTNA to understand the APU demands from the OEM point of view
  - Information has been collected and is compiled into our SSTS
- Phase 2: Design / Build / Develop at Delphi (FUNCTION)
  - Final concept and design kick-off in Q4 of 2005 planned
  - 2006 Phase 2 effort is design and component verification period

  - Late Phase 2 work will include a brass-board system build and test (2007)
  - OEM involvement will be reduced until Phase 3
- Phase 3: System Integration and Testing / Demo (FORM)
  - In 2008, system development will use OEM input for test planning and to add in "real-world" profiles from the changing APU marketplace

The Program was put on indefinite hold with all DOE funding suspended at this point in the project. The Partners were informed and each decided not to close out their involvement. Delphi elected to proceed with developing the APU with internal funding and no formal correspondence with DOE. The program was re-initiated May 2007 with funding at the pre-hold level.

7.7 Task 2.4 – APU Design and Layout

Delphi developed two new Diesel system designs. These systems are shown in **Figure 7.7-1**. The new designs required the addition of a pair of Delphi fuel injectors, a pair of fuel vapor carrier air valves, and a high-pressure reformer air pump. Anode tail gas recycle is used in the system to reduce catalyst temperatures in CPOx operation and to introduce water vapor to the reforming process to reduce carbon formation. The system package was increased in length by 125 mm to handle the additional content. In this system, the fuel pump and output power electronics were external to the system package. This system was restricted to zero-sulfur Diesel fuel since a hot-reformate desulfurization sorbent was not being packaged in the system. These systems were modifications of Delphi's existing Natural Gas (NG) APU augmented with a diesel reformer and diesel fuel delivery system.

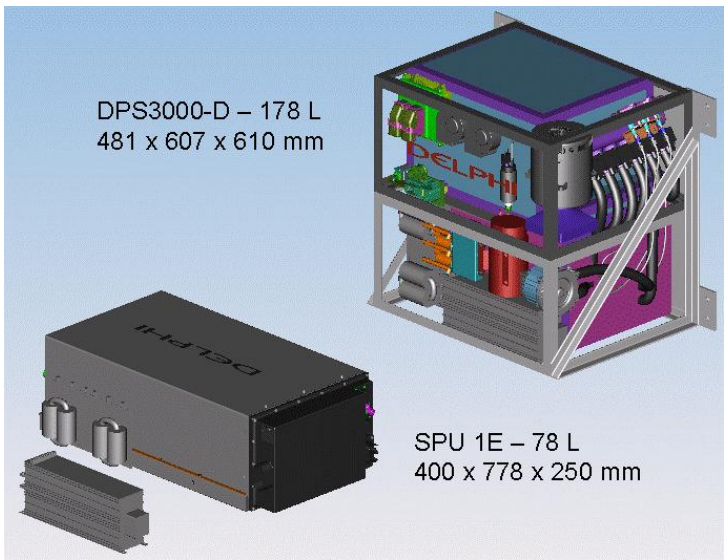

Figure 7.7-1: Delphi Diesel APU Systems

Delphi refined the architecture for the truck APU application. As depicted in **Figure 7.7-2,** a Power Electronics module was added in series with the SOFC System and the vehicle electrical system in order to sense and control the output of the SOFC System.

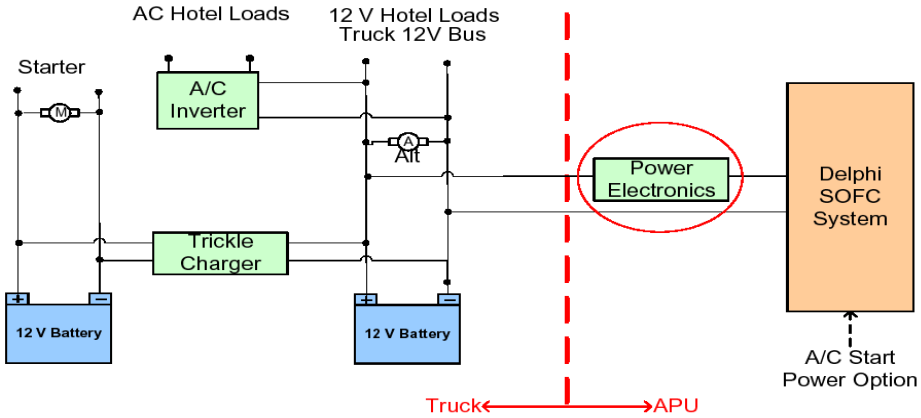

Figure 7.7-2: OEM Truck Architecture

7.8 Task 2.5 – Develop Subsystem Requirements Document & Develop Plan

The SPU 1 platform had two versions; a "D" level for natural gas, and an "E" level was developed in the July-December 2007 period for diesel fuel. The conversion of SPU 1D on natural gas to SPU 1E on diesel fuel allowed for focused development around fuel processing and fuel reforming issues with diesel fuel by leveraging many pre-existing system components. The SPU 1E system utilizes a low-efficiency CPOx reformer and hence suffered from relatively low system efficiency. While SPU 1E was a useful diesel-fueled SOFC powerplant, additional effort was undertaken to design the next generation of SOFC Diesel APU, the DPS3000, that eventually replaced the SPU 1 platform. A summary of the key differences between SPU 1E and DPS3000 are shown in **Figure 7.8-1**.

		SPU 1E GAP	DPS 3000 ENHANCEMENT
	Power Level (3.5kW net)	60 cells - 1-1.5 kW Stack cooling limited	90-100 cells - 3-3.5 kW Improved cooling environment around stacks
System Efficiency	**Parasitic power losses**	High parasitic loads due to high-pressure drop components and high stack cooling airflow required	Opportunities for reduced pressure drop and improved stack cooling.
System Efficiency	**Fuel Processing Efficiency**	Lower efficiency with CPOx reformer with low recycle flow	Improved efficiency with "Endothermic" reformer and high recycle flow
System Efficiency	**Heat Loss**	High heat loss due to thin insulation and high internal thermal communication (undesirable)	Increased insulation thickness and thermal component compartmentalization

Figure 7.8-1: Delphi Diesel APU Feature Comparison

A system analysis was performed on both SPU 1E and DPS3000 Diesel SOFC Systems. As expected, the SPU 1E system suffered from lower system efficiency (13-14%) and limited maximum net power output (1200-1500 W) due to low efficiency CPOx fuel reforming, reduced number of cells, and limitations on stack cooling capacity (high cathode pressure drop). The DPS3000 system design had several advantages that

served to increase power output (3000 – 3400 W) and improve system efficiency (27-30%). These were: endothermic fuel reformer, more SOFC cells, and auxiliary stack cooling (surface cooling).

The DPS3000 system assumed 100 SOFC cells with an active area of 105 cm^2 per cell, and a power density of 0.450 W/cm^2 at 0.7 V/cell. The DPS3000 APU design was also developed to utilize Delphi's Gen 4 Cell. The active area is approximately 4 times the Gen 3 Cell with similar operational profile (**See Figure 7.8-2**). This was consistent with anticipated performance on diesel reformate produced with an endothermic reformer and anode tail-gas recycle. Under these assumptions, the DPS3000 system generated up to 3400 W at 25 % efficiency, and a peak efficiency of 30% was available at approximately 2400 W net output. Most of the efficiency improvement was caused by higher fuel processing efficiency (140% with recycle) and lower parasitic loads on the system (22% of the gross stack output power). A majority of the parasitic load was due to high cathode airflow required to cool the SOFC stacks with a small allowable cooling temperature gradient, but the total cathode airflow was reduced to a minimum due to implementation of auxiliary stack surface cooling by ventilating the stack thermal insulation with low-pressure cooling air.

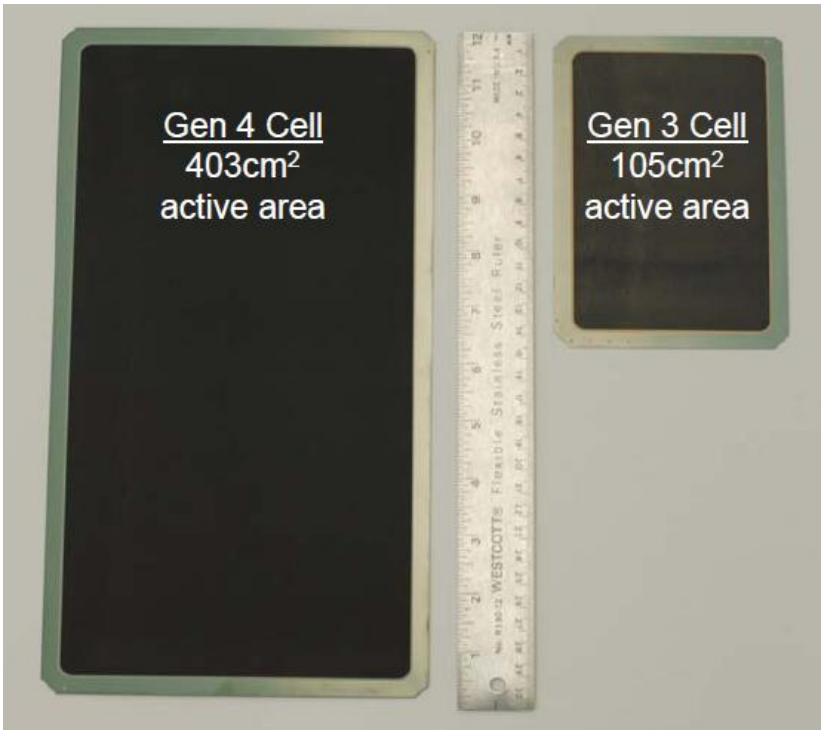

Figure 7.8-2: Delphi's Gen 4 and Gen 3 Cell Comparison

7.8.1 Power Architecture and Electronics Design

The application requirements of the North-American heavy-duty commercial vehicles dictate that the SOFC system interface with a 12 VDC power bus. This required a high-current stack-to-12VDC converter. Since the stack experienced a voltage range of 36 –

63 V, the converter had to have high input voltage range compatibility and also high conversion efficiency especially at high system output.

Delphi procured and tested a high-output, high efficiency, wide-input-range 12 VDC converter. Conversion efficiency across the output power band at several input voltages is shown in **Figure 7.8.1-1**. The converter had very high conversion efficiency (>96%) across most of the output power band and at input voltages consistent with high stack output power (40-50V).

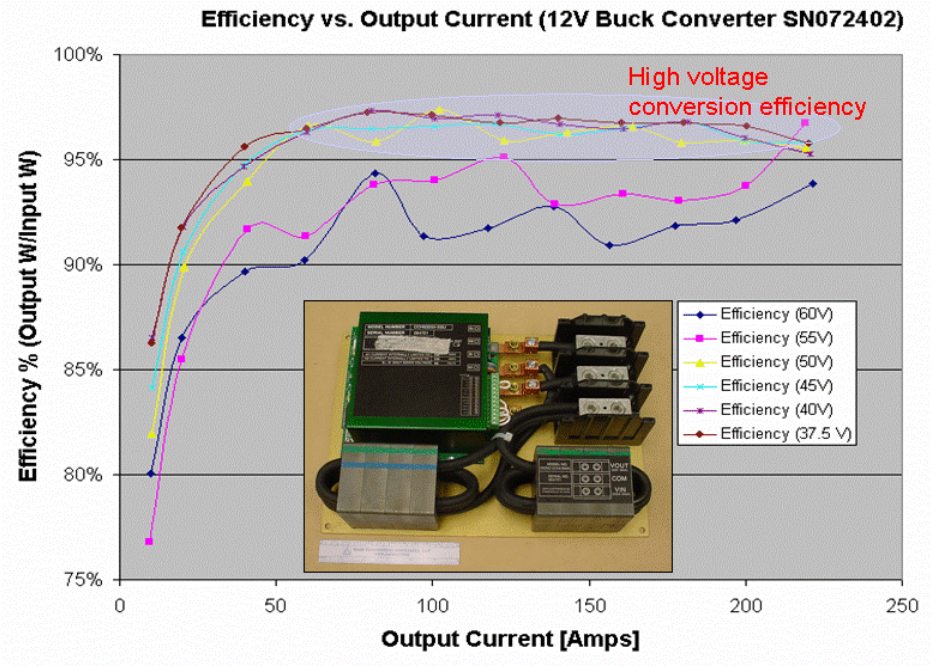

Figure 7.8.1-1: 250 A, 13.5 V (3.4 kW) DC/DC Converter

7.8.2 System Design and Architecture

The SPU 1E required the addition of a pair of fuel Delphi fuel injectors, a pair of fuel vapor carrier air valves, and a high-pressure reformer air pump. This system employed the Gen 4.2 T CPOx fuel reformer. Anode tail gas recycle was used in the system to reduce catalyst temperatures in CPOx operation, and introduce some water vapor to the reforming process to reduce carbon precipitation in the reformate. In this system, the fuel pump and output power electronics were still external to the system package. These components were packaged into an Application Development System, of which the SPU 1E diesel SOFC power plant was the core component. The system was restricted to zero-sulfur Diesel fuel since a hot-reformate desulfurization sorbent was not capable of being packaged in the system. Detail of the SPU 1E system assembly is shown in **Figure 7.8.2-1** and in the Test configuration in **Figure 7.8.1-2**.

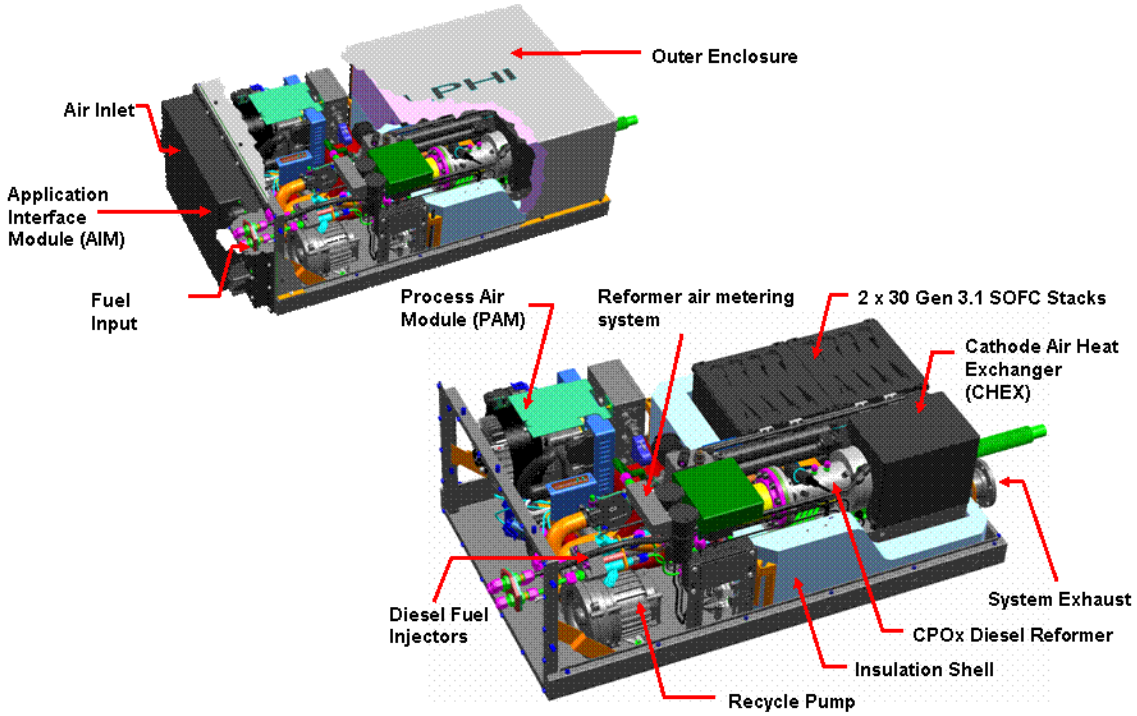

Figure 7.8.2-1: SPU 1E – Diesel SOFC Powerplant

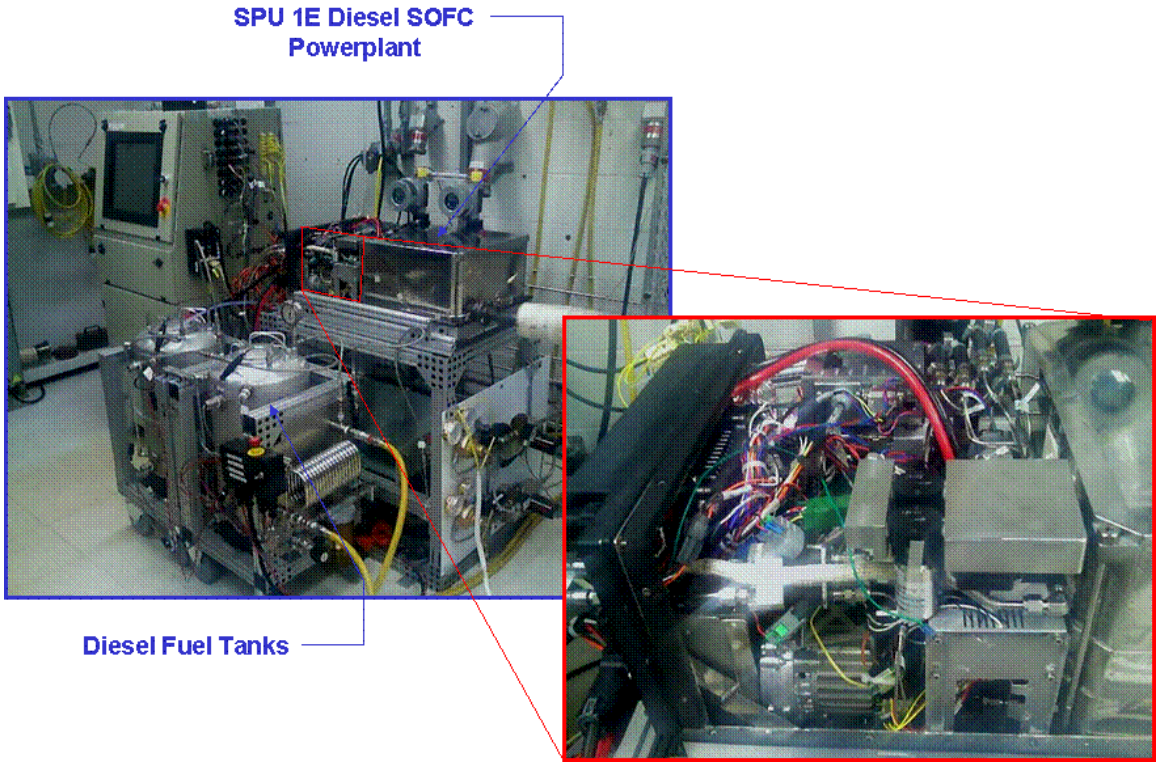

Figure 7.8.2-2: SPU 1E - Diesel SOFC System on Test

7.8.3 Diesel POx Reformer Development

A diesel POx reformer design was developed. This was required to use the existing hardware for proof of concept of a diesel fueled APU. Development efforts during this reporting period were focused on achieving successful systems operation using a diesel POx reformer. A number of problems were encountered due to the immature design of this reformer for applications using diesel. One of the more pressing issues was carbon plugging of the reactor core (**Figure 7.8.3-1**). In order to resolve this issue, several techniques were utilized including Green Y Analysis (**Figure 7.8.3-2**). It was determined that the temperature at the flange was a major contributor which drove component development. Also, several modifications to the existing POx hardware was done to investigate various mixing and vaporization strategies (**Figures 7.8.3-3** and **7.8.3-4**). These strategies would later be incorporated in the next generation Endothermic reformer designs (Gen8T). An important outcome of these studies was the better understanding of the role that insulation of the reformer has on the reformer performance and special calibration requirements. This work would be the baseline for additional O:C development work later in the project.

Figure 7.8.3-1: Carbon Plugging Investigation

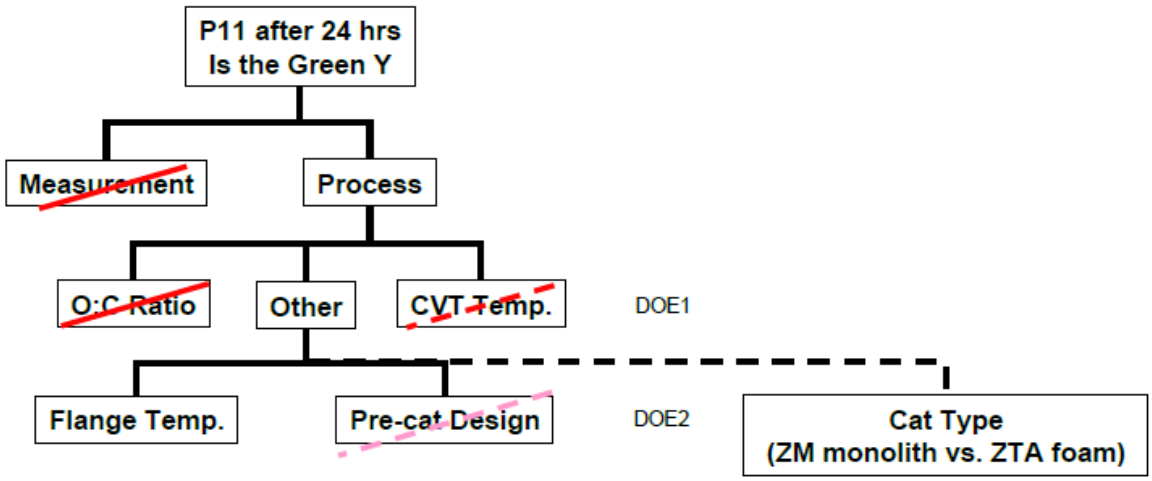

Use P11 after 24 hrs as the Green Y.

Next Runs would be:

Mixer	Precat	O/C	CV temp	Cat type	Flange Temp
NG1	per DOE1	1.15	650C	Monolith	650
NG1	per DOE1	1.15	650C	Monolith	not heated
NG1	per DOE1	1.15	650C	Foam	650
NG1	per DOE1	1.15	650C	Foam	not heated

Figure 7.8.3-2: Green Y Analysis of Carbon Issue

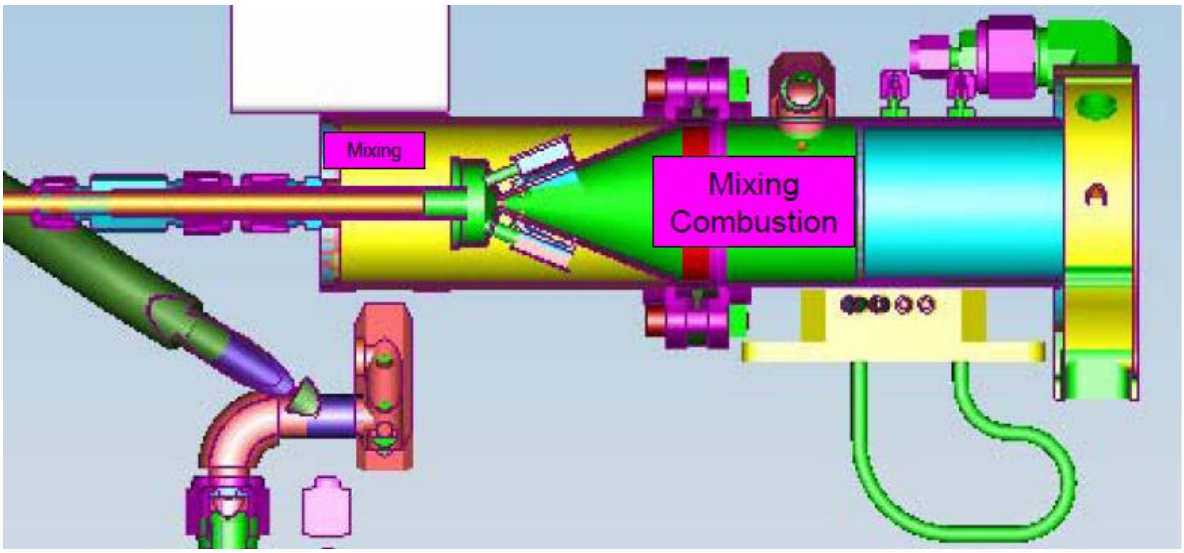

Figure 7.8.3-3: Early POx Reactor Design Analysis

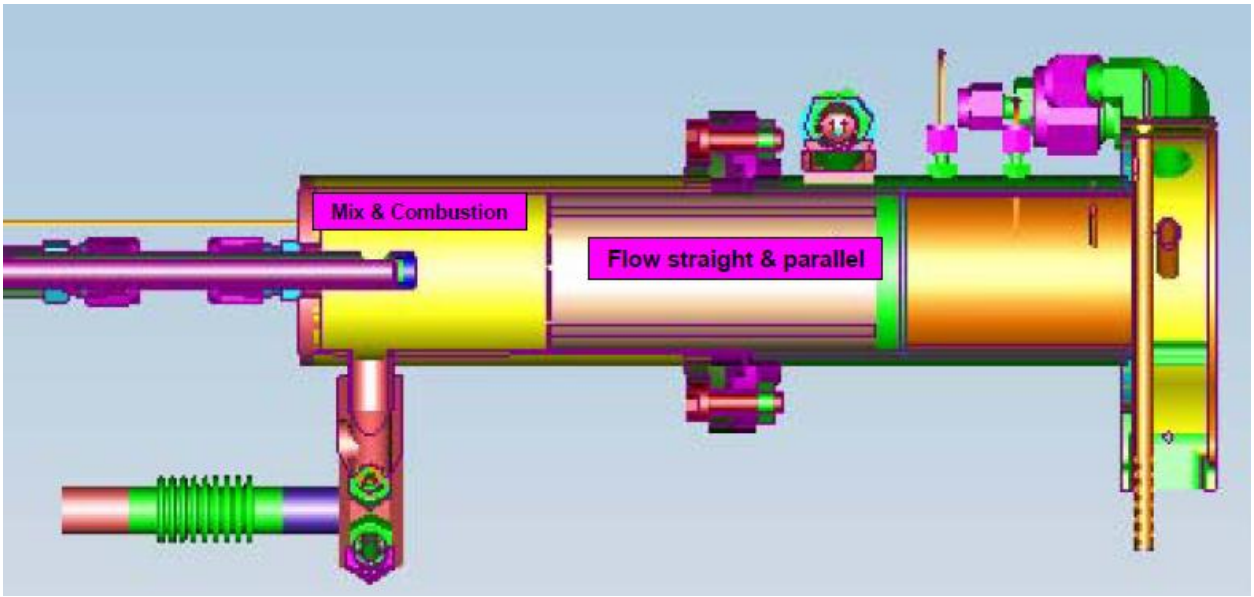

Figure 7.8.3-4: Modified POx Reformer Design

7.8.4 Reformate De-Sulfurization Development

In order to utilize ULSD fuel (sulfur is a contaminate for the fuel cell), Delphi must remove the sulfur from the fuel. Delphi's de-sulfurization strategies included:

- Use of liquid and reformate (hot) desulfurizer beds (**Figure 7.8.4-1**)
- Use of only reformate desulfurizer (**Figure 7.8.4-2**)
- Canister replacement (single use)
- Regenerative (rotary) designs

Delphi determined that for this application, two designs would be pursued: Reformate replaceable canister (**Figure 7.8.4-3**) and a reformate rotary regenerative design (**Figure 7.8.4-4**). Both designs were required to remove sulfur from the reformate stream to 10 parts per billion volume (ppbv) to not negative effect SOFC stack performance.

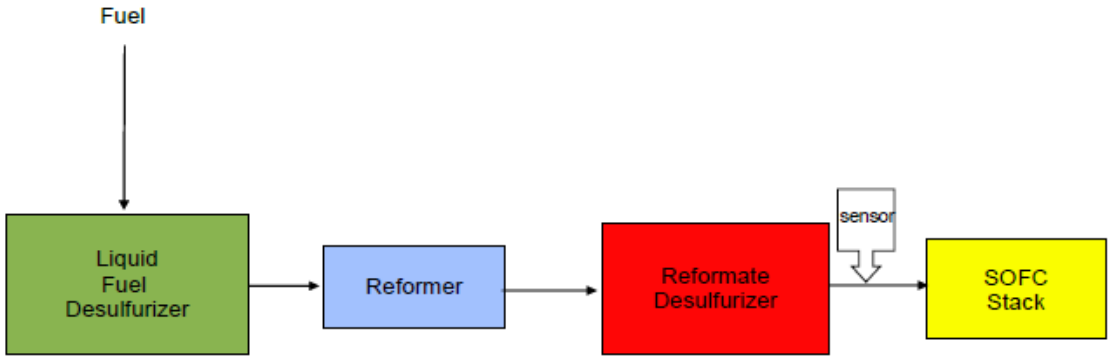

Figure 7.8.4-1: Early Desulfurization Strategy

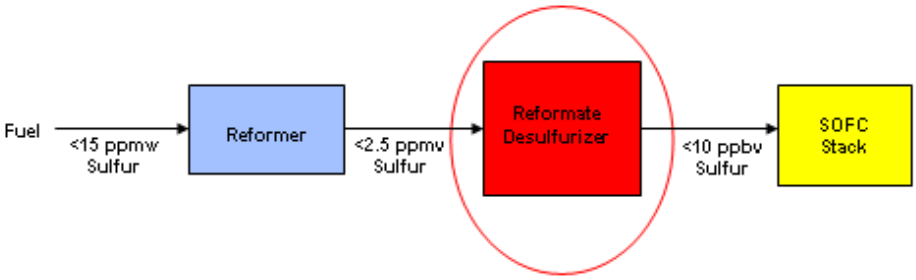

Figure 7.8.4-2: Final Desulfurization Strategy

Figure 7.8.4-3: Early Desulfurizer Bed Prototype Hardware

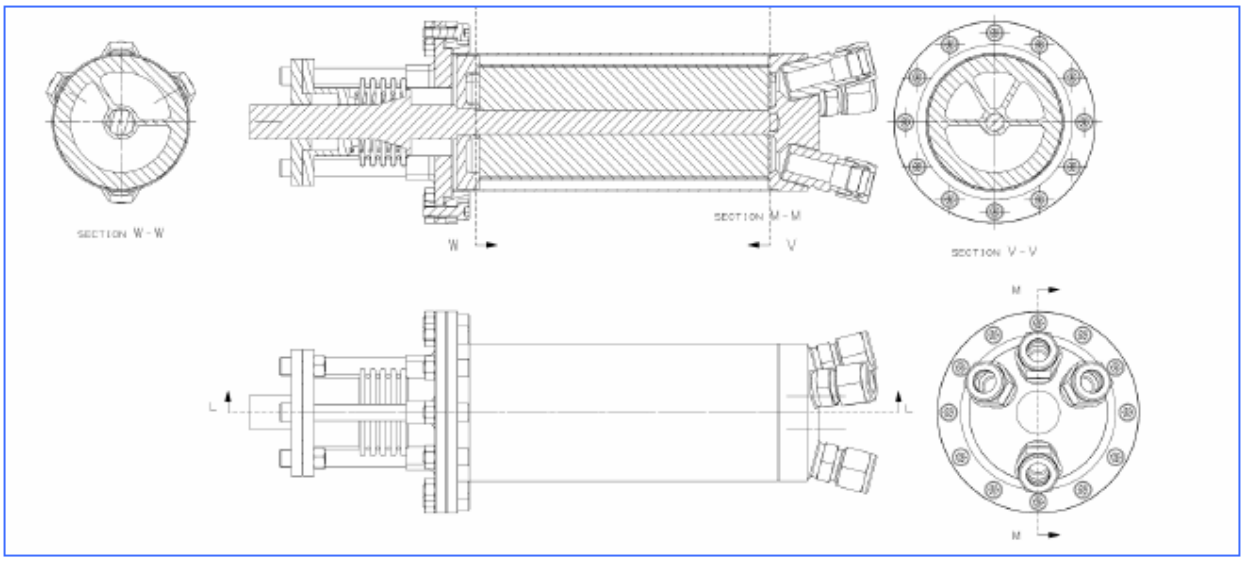

Figure 7.8.4-4: Rotating Bed Concept

7.9 Task 2.6 – SOFC APU Hardware Design and Build

The overall design of the DPS3000D APU system and subsystem components was completed during this phase of the project, apart from for minor improvements and tweaks. While the DPS3000D APU was tested and the components were fit together important lessons were learned and those lessons have been and incorporated into the overall design.

Using the mounting information that was obtained from the heavy duty truck OEM's Delphi continued the analysis of how the APU system mounted to the heavy duty truck chassis. Efforts were made to refine the mounting design that was in the final stages. **Figure 7.9-1** illustrates how the APU was mounted to the heavy duty truck chassis beneath the fairing next to the fuel storage tank. **Figure 7.9-2** shows the details of the APU Interface. The design of the mounting interface utilized spring type isolators on the mounting brackets to reduce the effects of vibration as the truck drives down the road. **Figure 7.9-3** is the prototype outer enclosure that provides for a sealed APU.

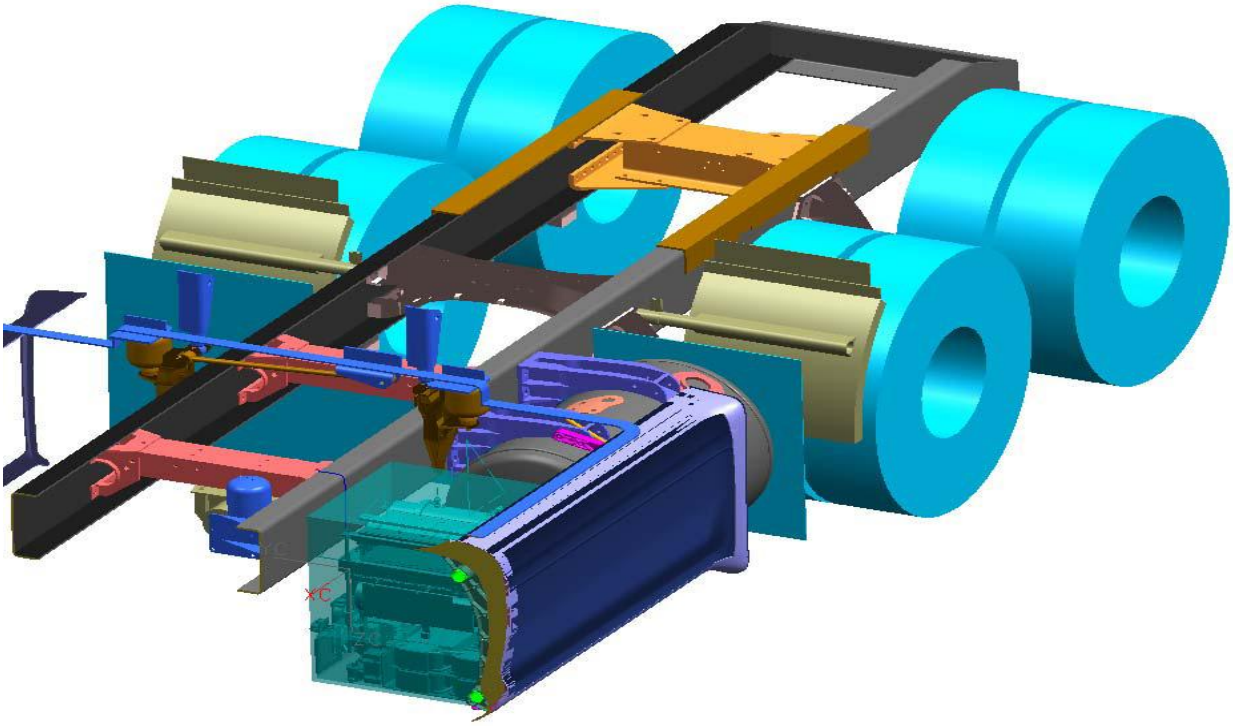

Figure 7.9-1: DPS3000D APU Conceptual Mounting on Heavy Duty Truck Chassis

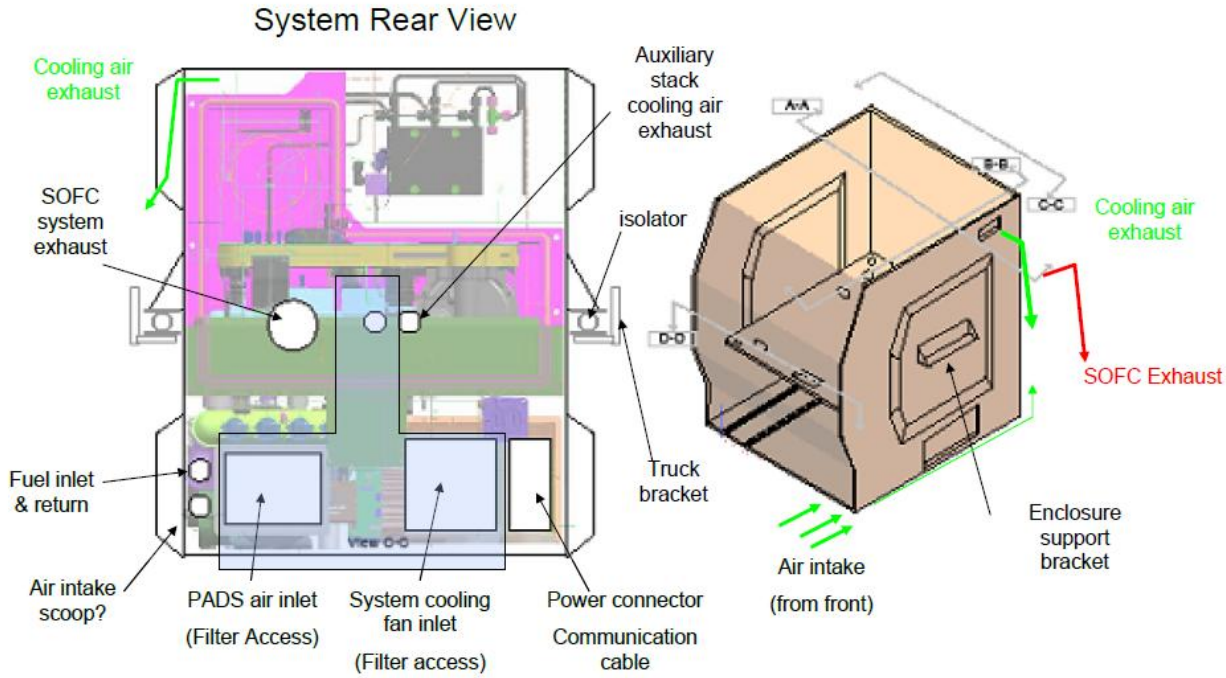

Figure 7.9-2: SOFC APU Interfaces

Figure 7.9-3: Prototype Outer Enclosure

7.10 Task 2.7 – Subsystem Test Fixture Hardware Build

A fuel reformer test platform was designed, built, and installed in the laboratory. This development system combined a high-efficiency "endothermic" diesel fuel reformer, up to four 30-cell SOFC stacks, heat exchangers, and a desulfurizer sorbent. The test hardware included a new high-efficiency process air blower. Characterization of diesel system performance, confirmation of desulfurizer performance, and control software algorithm development were primary goals of this effort. Initial testing on natural gas was scheduled for October 2008 with conversion to diesel fuel operation in November 2008.

Delphi designed and constructed the development stand to support the performance and durability evaluation of the integration of critical components. This development system was created through diesel fuel adaptation of Delphi's SPU2 stationary natural gas system. A 3-liter hot-reformate desulfurizer vessel was added to the system between the reformer and the SOFC stacks to remove H_2S present in the reformate stream. In this configuration, the desulfurizer sorbent had up to two months of operational capacity with US07 diesel fuel.

The required hardware modifications and system assembly were completed. Initial testing and durability evaluation commenced in the fourth quarter of 2008.

7.11 Task 2.8 – Subsystem Testing and Development Iterations

The new process air blower and recycle pump manufactured by R & D Dynamics to Delphi specifications were made with an air bearing technology. Because of this Delphi wanted to get early parts on test to insure compatibility and performance. Performance and durability testing of the air blower was initiated in January of 2009. 500 Cycles of accelerated truck load profile were completed in the test chamber shown in **Figure**

7.11-1. The acceleration of the truck schedule allowed Delphi to achieve 50,325 hours equivalent operation with no issues on the blower.

Figure 7.11-1: Delphi Test Chamber

Figure 7.11-2 and **Figure 7.11-3** below show the results of thermal cycles on Gen. 3.2 30-cell stack with approximately, a 10 hour cycle starting at 50°C increasing to operating temperature and then decreasing back to 50°C. Performance was evaluated at each thermal cycle, at a constant current load of 30 Amps at operating temperature and with Fuel of 48.5% H_2, 3% H_2O, rest N_2. 89 cycles completed with minimal degradation (less than 1%). These tests validated that the stack were capable of providing the required robustness and repeatability for this application.

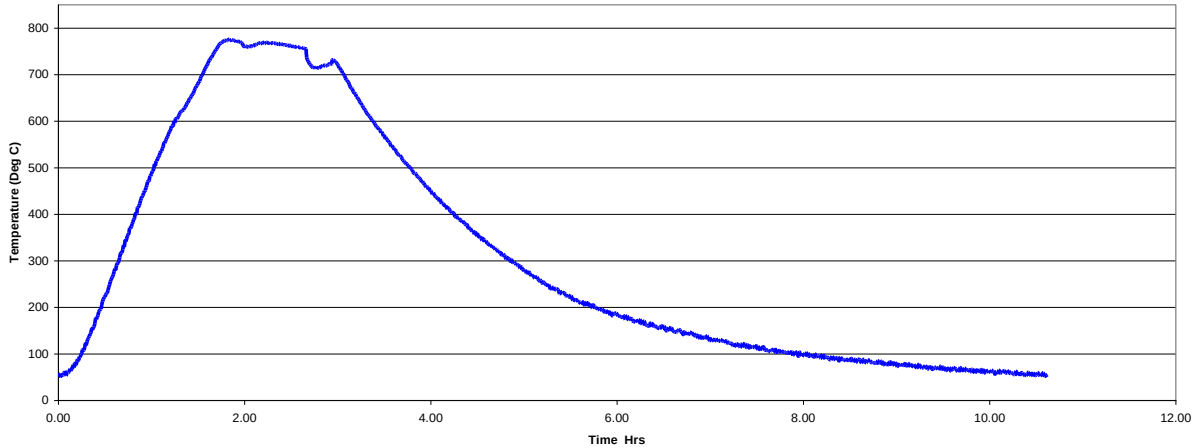

Figure 7.11-2: Generation 3.2, 30 Cell Stack Thermal Cycling, Temperature vs. Time

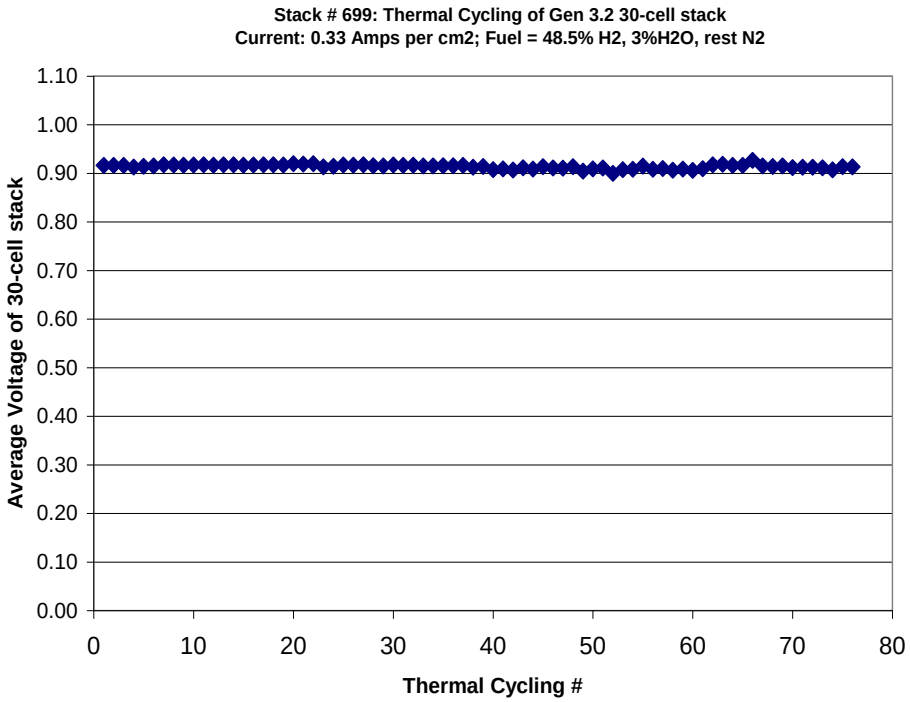

Figure 7.11-3: Generation 3.2, 30 Cell Stack Thermal Cycling, Voltage vs. Cycle

7.11.1 Endothermic Reformer Development

The reformer for the DPS30000 was developed based on the Gen5T reformer design (**Figure 7.11.1-1**). Several reactor concepts were developed and investigated during this phase of the project (**Figure 7.11.1-2**). The primary challenge was packaging and reformate quality. Extensive model was done to determine the optimum temperature profile to provide the required reformate stream (**Figure 7.11.1-3**) while being compliant during rapid heating. The combustor is a co-linear design that aligns with the reactor. This gave this best packaging footprint while being very efficient, minimizing heat lost due to plumbing. The combustor mixing zone was analyzed to determine optimal positioning of inlets and exits to efficiently consumption of the fuel (**Figure 7.11.1-4**). The Gen8T reformer is shown in lab dress in **Figure 7.11.1-5**.

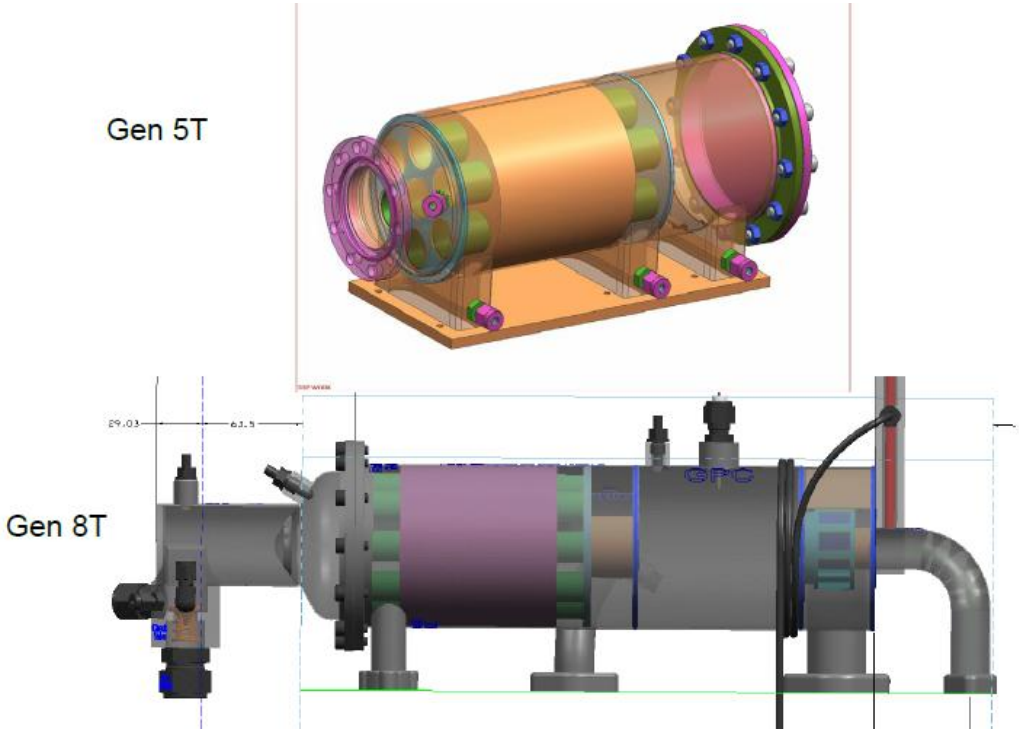

Figure 7.11.1-1: Endothermic Reformer Development

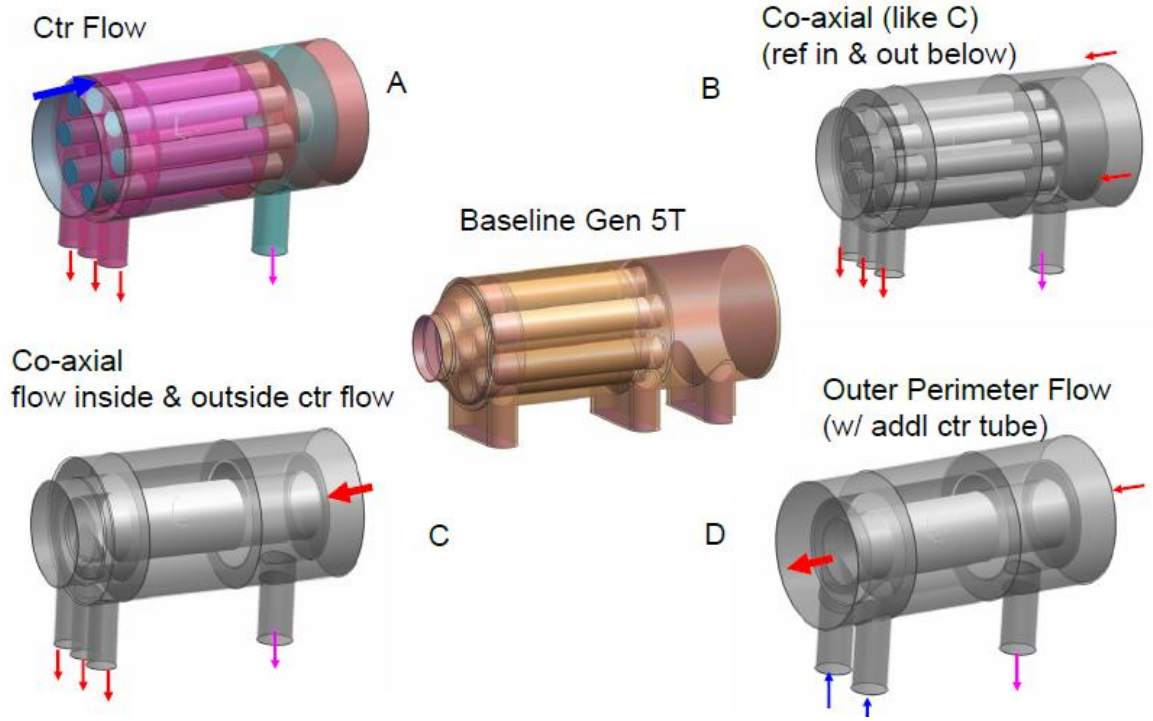

Figure 7.11.1-2: Reactor Concepts

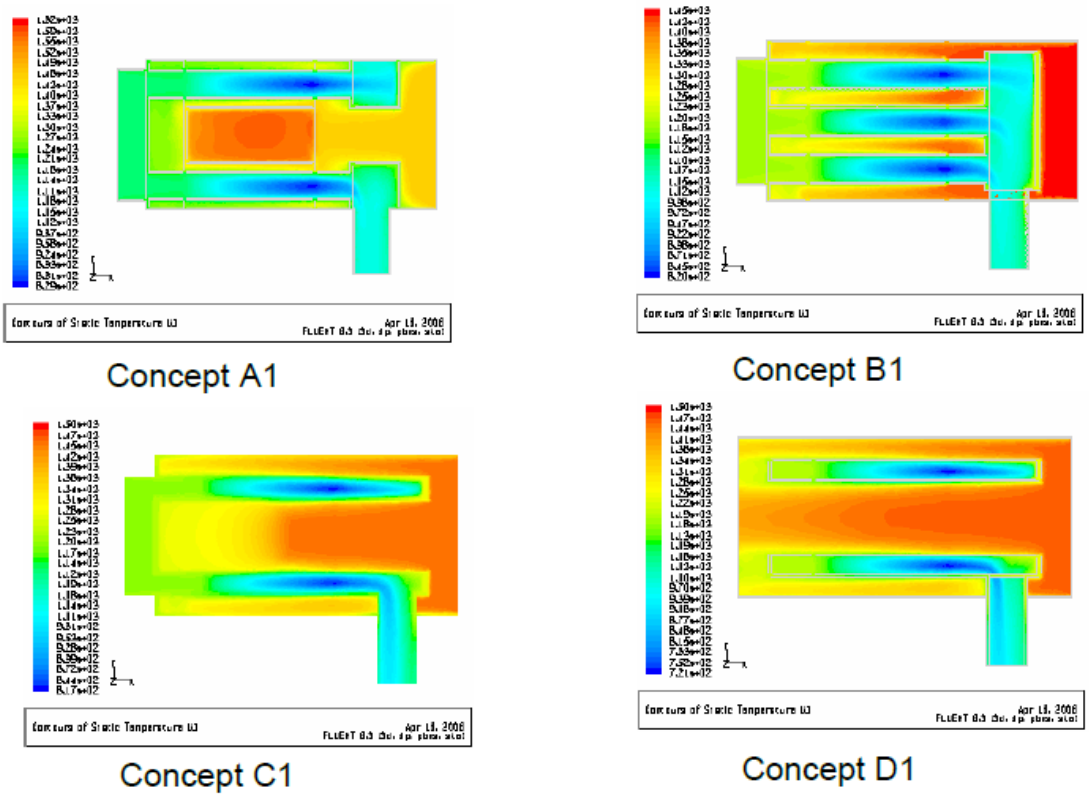

Figure 7.11.1-3: Reactor Temperature Modeling

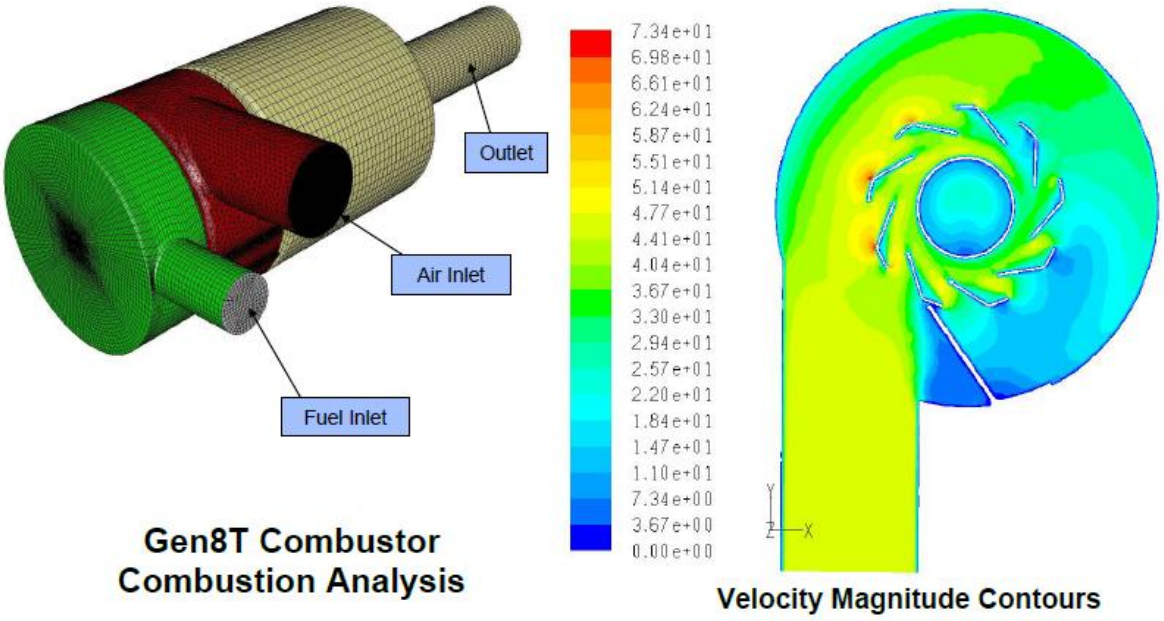

Figure 7.11.1-4: Gen8T Combustor Modeling Development

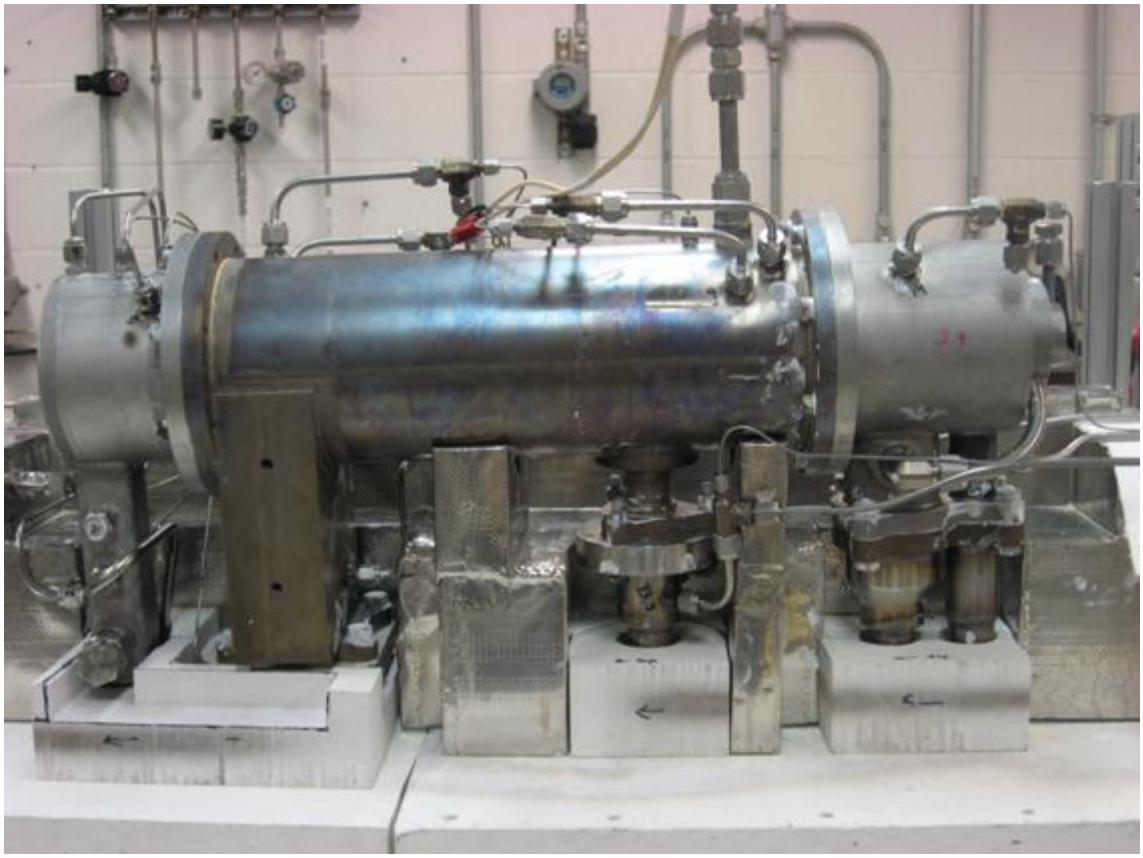

Figure 7.11.1-5: Gen8T reformer in Lab dress

7.11.2 System Development

The DPS3000D system Design Freeze was March 2009 (See Figure 7.11.2-11). The design consisted of the 15 subsystems including the Gen 3 SOFC stack technology. Parts were ordered with an initial integration date of June 2009. In order to meet this compressed timeline, several parts were made with non-production type processes. As a result, the unit did not meet initial mass targets, but provided a platform for discussion of possible mass and cost reduction strategies for the next round of prototype parts.

A separate, but connected task of Design Failure Mode Effects Analysis (DFMEA) was performed for the APU, with the initial step being assigning weightings for various effects by function. These were then categorized and sorted, then used to focus design efforts to mitigate those risks (See **Figures 7.11.2-3 and 7.11.2-4**). This process was used throughout the design process to document and modify all known operational aspects of the DPS3000 design.

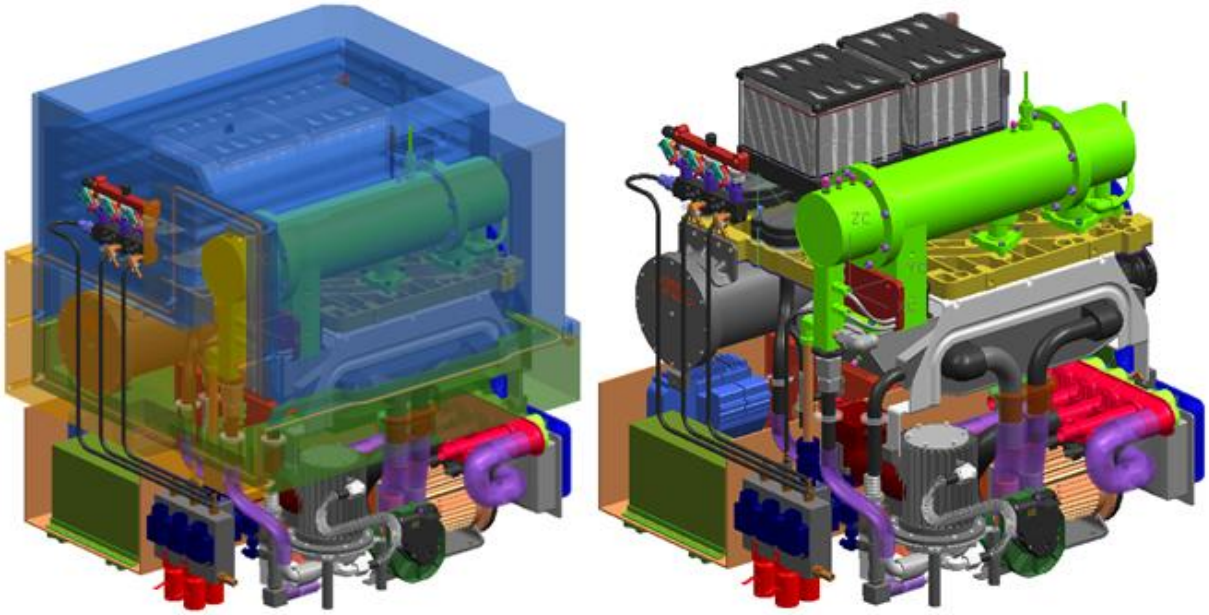

Figure 7.11.2-1: DPS3000D circa March 2009 (Design Freeze)

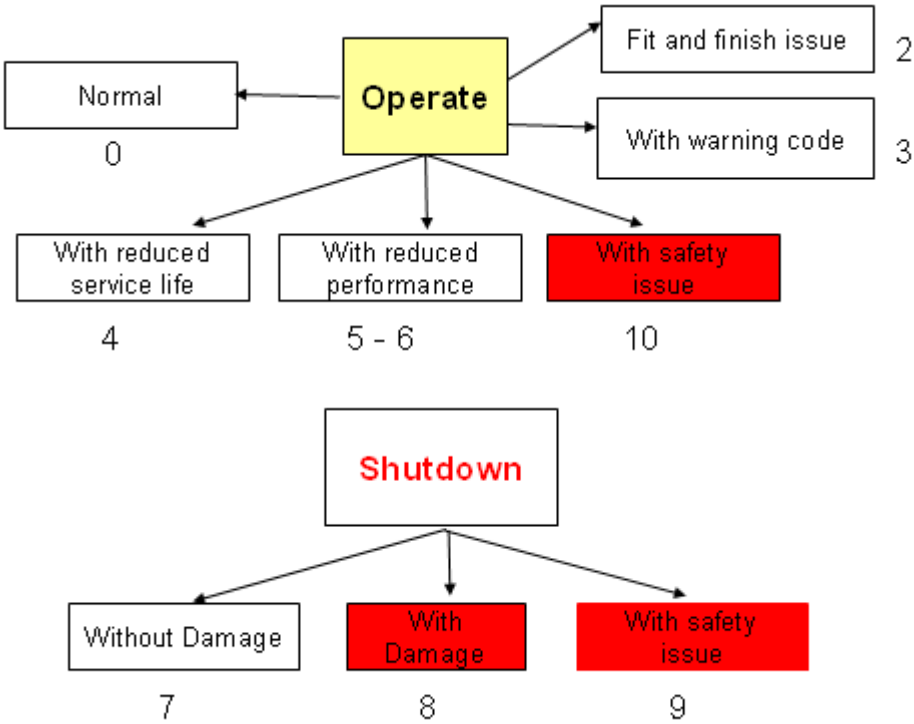

Figure 7.11.2-2: DFMEA Severity Analysis Rating

Subsystem Owner	Item	Function	Potential Failure Mode	Potential Effects of Failure	Ultimate System Response	Sev	Class	Potential Cause(s) / Mechanisms of Failure	Occ	Current Design Controls (P / D)	Det	RPN	Rec. Actions
REF	Feedstream Delivery Unit (FDU)	To homogeneously mix recycle, air, and fuel at the correct ratio for the reformer for combustion	Plugged	Reduced quality of mixing, increased probability of precombustion, pressure drop would increase, need to clean reformer, Catalyst Deterioration	System shutdown with damage	8		Pyrolysis of fuel, general carbon formation, contamination	10		10	800	(D) CFD analysis and system validation testing. S&D limits on T2 and P12
REF	Reformer Counterflow Heat Exchange Reactor	Reform Fuel/Air/Recycle to reformate	Poor reformate quality	Carbon deposition all downstream, increase pressure drop, Stack deactivation, catalyst damage	System shutdown with damage	8		Contaminated fuel, System controls problems	10		10	800	
REF	Reformer Counterflow Heat Exchange Reactor	To contain and transport the hot reformate	Plugging	carbon formation which would increase delta p, Catalyst damage	System shutdown with damage	8		Carbon formation, poor air/fuel control, poor mix quality upstream	10		10	800	(D)-P12 pressure sensor used in system mechanization
REF	Reformer Counterflow Heat Exchange Reactor	Reform Fuel/Air/Recycle to reformate	Poor reformate quality	Carbon deposition all downstream, increase pressure drop, Stack deactivation, catalyst damage	System operate with reduced performance	6		Contaminated fuel, System controls problems	10		10	600	
STACK	Stack flow manifold	Convey and distribute anode and cathode feed/tail gases to/from SOFC stacks	External leak of reformate	Combustible gas leakage to PSM, burning of reformate external to stack, Excessive PSM air temperatures	System shutdown with safety issue	9		Failure of brazed or welded seals;	6		10	540	(D) application of S&D limits on S4-Combustible gas sensor; force state 100 if out of range; implement Hot-Zone-Module leak vent. (P) Vent leak gases out to exhaust path via postive pressure of enclosure
REF	Feedstream Delivery Unit (FDU)	Prevent Pre-Combustion	Pre-Combust	Carbon formation which would increase delta p, Catalyst damage	System shutdown with damage	8		Flashback (combustion) traveling from the catalyst face. Ignition on hot walls	6		10	480	S&D limits on T12 and T2
RAFM	V24. Post Reformer Air Injection Valve Hose and Seal (outlet side)	To inject air into Reformate stream post Reformer	Hose ruptured/leaky seal (outlet side)	O/C ratio is too low for proper functioning of stacks, resulting in not enough moisture, resulting in carbon build up in stacks, increasing system pressure which ultimately could lead to precombustion in the reformer. Stack degradation.	System shutdown with safety issue	9		Incorrect assembly, component misalignment, vibration, preexisting defect	5		10	450	(D) Safety and Diagnostic Sg4 Combustible Gas Sensor (D) Design validation testing

Figure 7.11.2-3: System DFMEA Work Sheet

7.12 Task 2.9 – DOE Critical Decision Milestone #3

A milestone review presentation was conducted on April 23, 2009 at the Delphi Rochester, NY facility and broadcast to the DOE PM staff via teleconference. The purpose of the presentation was to review development progress to the overall objectives and matrices of the program with the DOE and team members.

7.13 Task 2.10 – System Module Testing and Development

The SOFC APU consisted of three main modular sections, separated by performance characteristics. The High temperature zone, known as the Hot Zone Module (HZM) is where the highest temperature hardware of the SOFC system is housed. The direct-coupled balance of plant hardware is kept in the Plant Support Module (PSM) and the electronics and controls are housed the Application Interface Module (AIM). All three modules are put together in a larger enclosure that is used for structural mounting and protection from the environment.

Design and testing of each prototype section was completed and ready for integration and bench-top testing.

7.14 Task 2.11 – Phase 2 Review

7.15 Task 3.1 – Full APU System Testing and Development

Objectives:

- Thermal cycling tests of complete system

- Hardware Development
- Software Development
- Load cycling of only thermal stacks
- Usage of Anode tail gas simulation to generate recycle

Accomplishments:

During this phase Delphi performed twenty-two full thermal cycles on ULSD, twenty-nine ULSD fuel starts with an additional 160 total hours of operation. Delphi focused on complete system "Turn Key" starts, warm-ups, and repeated cool-downs (to approximately ~450°C). Additionally, three thermal cycles with temperatures reaching ~550°C were performed with set # 1 improvements implemented. Testing identified IHEX issues that were then corrected prior to the simulated load cycles testing.

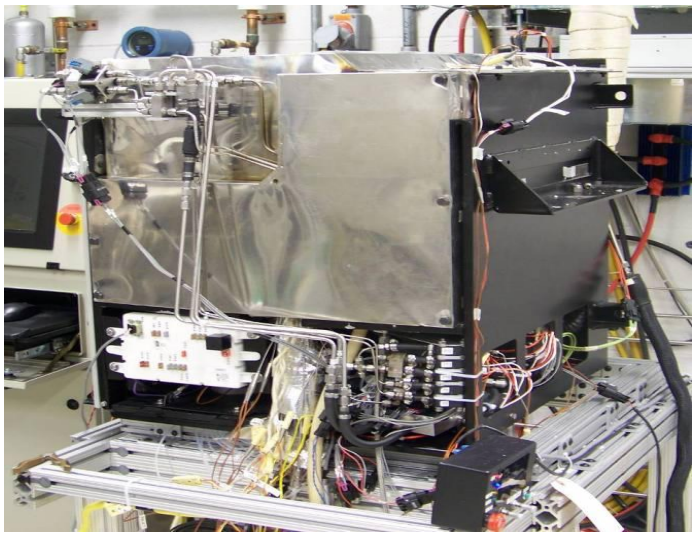

Figure 7.15-1: DPS3000 Set 1 (Thermal Cycle System)

Delphi simulated run conditions with thermal stacks by creating simulated anode tail gas, injecting air inside the thermal stacks, thereby simulating transfer of oxygen molecules across the cell membrane. By doing this, Delphi was able to perform more thorough system shakedowns, including load cycles without electrochemical stacks. In addition, Delphi was able to exercise a recycle loop, electronics and application side support, verifying 85% of the system performance and operation.

7.16 Task 3.2 –APU System Laboratory Demonstration with Simulated Load Cycles

All goals established for this task were completed.

Objectives:

- Operate with electrochemical (EC) stacks
- Simulate load cycles
- Monitor Stack Voltage Internally
- Perform natural frequency sweep
- Characterize enclosure temperature distribution

Accomplishments:

During this phase Delphi performed full simulated load cycles with EC stacks, pulled power during cycle testing, monitored stack cell voltages, (See **Figures 7.16-1** through **7.16-4**) performed five ultra low sulfur diesel (ULSD) starts and two additional full thermal cycles. Furthermore an initial Natural Frequency Sweep was performed. Enclosure exit air temperature was established at ~50°C.

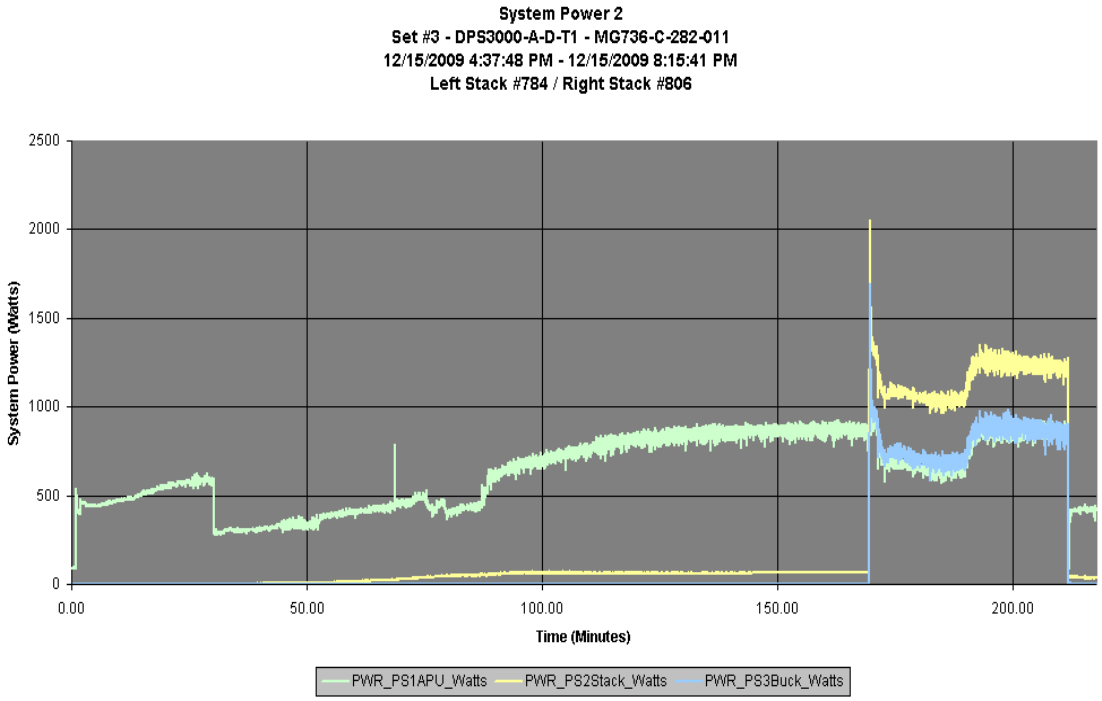

Figure 7.16-1: System Net Power

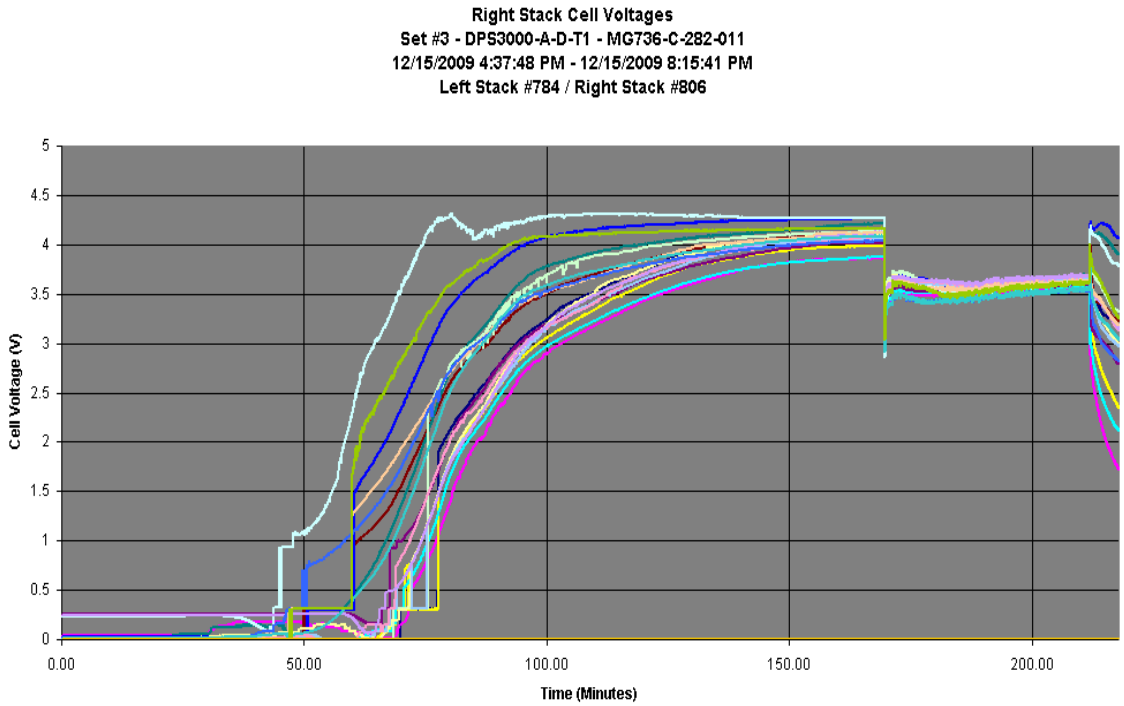

Figure 7.16-2: Stack Cell voltages

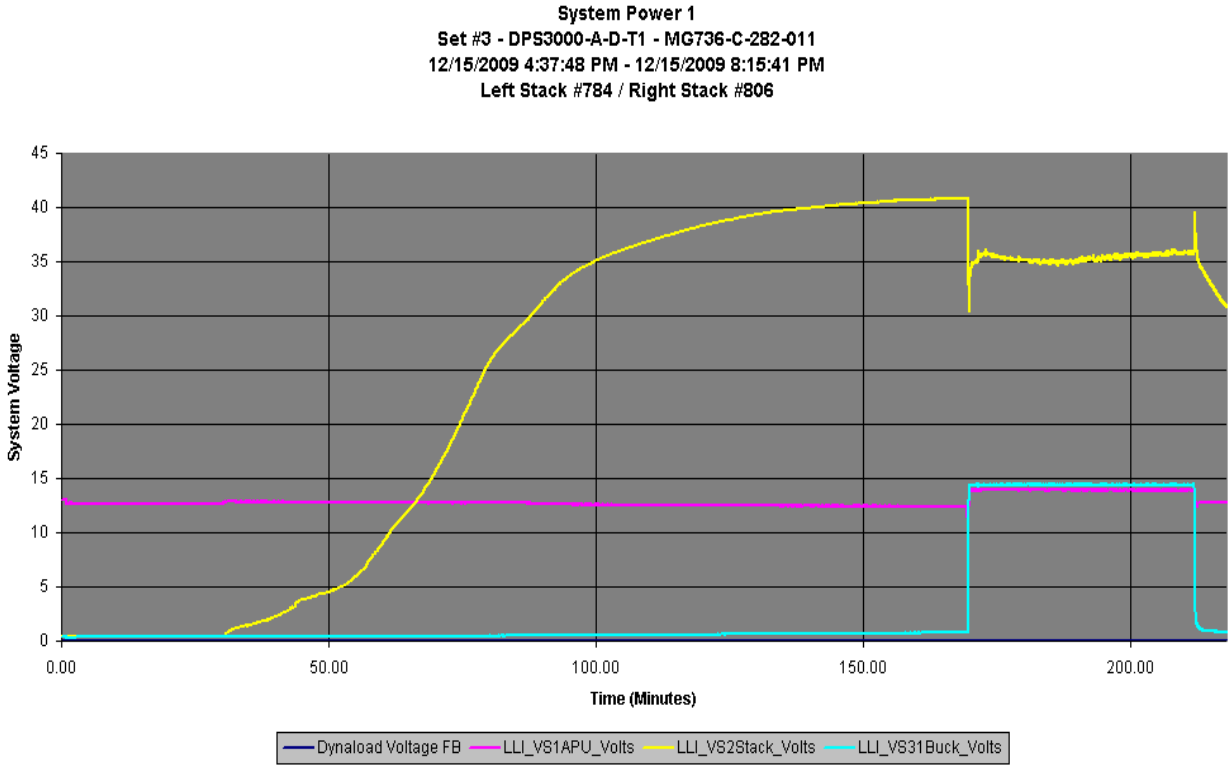

Figure 7.16-3: Stack Voltage

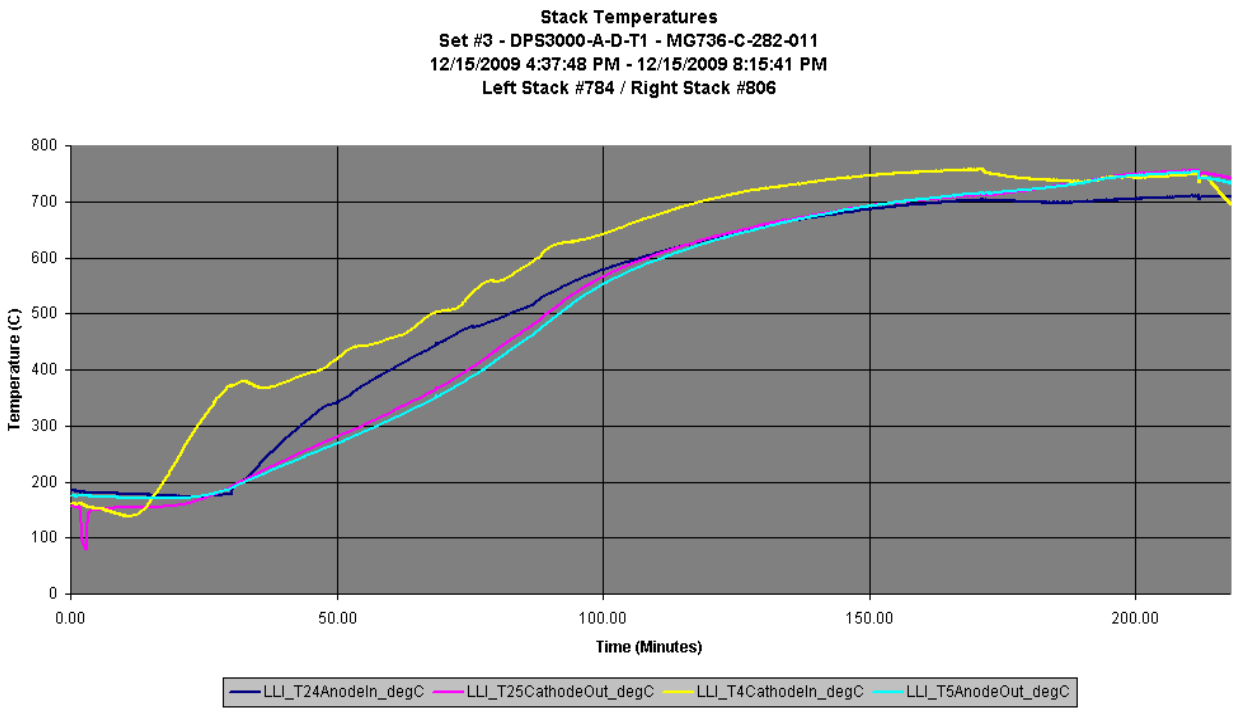

Figure 7.16-4: Stack Temperature

The system was tested for noise generation and electromagnetic compatibility (EMC) with Delphi Packard.

Figure 7.16-5: DPS3000D on Shaker Table (Vibration Testing)

Figure 7.16-6: DPS3000D on Vehicle

Figure 7.16-7: DPS3000D on Vehicle Test / Demonstration

7.17 Task 3.3 –Final Reports and Presentations

Delphi is now working on the final review for the completion of reports and documentation required for the preparation of the final oral/visual presentation. This presentation will be for DOE staff and members of the Delphi development team.

8.0 Patents:

Publications :

7562588 -METHOD AND APPARATUS FOR CONTROLLING MASS FLOW RATE OF RECYCLELD ANODE TAIL GAS IN A SOLID OXIDE FUEL CELL SYSTEM

7648784 - METHOD AND APPARATUS FOR CONTROLLING A FUEL CELL SYSTEM HAVING A VARIABLE NUMBER OF PARALLEL-CONNECTED MODULES.

9.0 Publications / Presentations:

1. Presentation of Program status and accomplishments at “21st Century Truck Idling Reduction Technology Review” March 16, 2005, Washington, D.C.
2. Presentation of the SOFC APU Program at the “Hydrogen Program Review” May 24th, 2005, Washington D.C.
3. January 2008: DOE Pre-Solicitation Workshop; Washington, D.C.; Presentation: “SOFC Technology R&D Needs”; Presented by: Steven Shaffer, Delphi Corporation.
4. June 2008: DOE Hydrogen Program Peer Review; Golden, CO.; Presentation: “Solid Oxide Fuel Cell Development for Auxiliary Power in Heavy Duty Vehicle Applications”; Presented by: Steven Shaffer, Delphi Corporation.
5. April 2009: DOE Critical Milestone #3 Review; Rochester, NY; Presentation: “Solid Oxide Fuel Cell Development for Auxiliary Power in Heavy Duty Vehicle Applications, Milestone Update”; Presented by: Gary Blake, Delphi Corporation.
6. May 2009: DOE Hydrogen Program Peer Review; Arlington (Crystal City), VA.; Presentation: “Solid Oxide Fuel Cell Development for Auxiliary Power in Heavy Duty Vehicle Applications”; Presented by: Steven Shaffer, Delphi Corporation.
7. November 2009: 2009 Fuel Cell Seminar; Palm Springs, CA; Presentation: “Solid Oxide Fuel Cell Development for Transportation and Stationary Applications: Latest Update on Stack and System Performance”, Presented by: Steven Shaffer, Delphi Corporation.
8. June 2010: DOE Hydrogen Program Peer Review; Arlington (Crystal City), VA.; Presentation: “Solid Oxide Fuel Cell Development for Auxiliary Power in Heavy Duty Vehicle Applications”; Presented by: Dan Hennessey, Delphi Corporation.

10.0 Table of Figures:

Figure 5.0-1: Project Approach 5
Figure 5.0-2: House of Quality (Voice of Customer) 6
Figure 5.0-3: Customer Needs (Left side) 7
Figure 5.0-4: Critical to Satisfaction (Top side) 7
Figure 5.0-5: System Requirements Document (Example) 8
Figure 5.0-6: SPU 1E 9
Figure 5.0-7: SOFC Diesel APU Model Mechanization 9
Figure 5.0-8: Diesel SOFC APU Model Results 10
Figure 5.0-9: Class 8 Truck Load Profile 11
Figure 5.0-10: Crystal Ball analysis of the Truck Load Profile 11
Figure 6.0-1: DPS3000 Set 1 (Thermal Cycle System) 12
Figure 6.0-1: DPS3000D Set 3 13
Figure 6.0-3: DPS3000D on Vehicle 13
Figure 7.5-1: Vehicle Electrical Architecture 16
Figure 7.7-1: Delphi Diesel APU Systems 18
Figure 7.7-2: OEM Truck Architecture 19
Figure 7.8-1: Delphi Diesel APU Feature Comparison 19
Figure 7.8-2: Delphi's Gen 4 and Gen 3 Cell Comparison 20
Figure 7.8.1-1: 250 A, 13.5 V (3.4 kW) DC/DC Converter 21
Figure 7.8.2-1: SPU 1E – Diesel SOFC Powerplant 22
Figure 7.8.2-2: SPU 1E - Diesel SOFC System on Test 22
Figure 7.8.3-1: Carbon Plugging Investigation 23
Figure 7.8.3-2: Green Y Analysis of Carbon Issue 24
Figure 7.8.3-3: Early POx Reactor Design Analysis 24
Figure 7.8.3-4: Modified POx Reformer Design 25
Figure 7.8.4-1: Early Desulfurization Strategy 26
Figure 7.8.4-2: Final Desulfurization Strategy 26
Figure 7.8.4-3: Early Desulfurizer Bed Prototype Hardware 26
Figure 7.8.4-4: Rotating Bed Concept 27
Figure 7.9-1: DPS3000D APU Conceptual Mounting on Heavy Duty Truck Chassis ... 28
Figure 7.9-2: SOFC APU Interfaces 28
Figure 7.9-3: Prototype Outer Enclosure 29
Figure 7.11-1: Delphi Test Chamber 30
Figure 7.11-2: Generation 3.2, 30 Cell Stack Thermal Cycling, Temperature vs. Time 30
Figure 7.11-3: Generation 3.2, 30 Cell Stack Thermal Cycling, Voltage vs. Cycle 31
Figure 7.11.1-1: Endothermic Reformer Development 32
Figure 7.11.1-2: Reactor Concepts 32
Figure 7.11.1-3: Reactor Temperature Modeling 33
Figure 7.11.1-4: Gen8T Combustor Modeling Development 33
Figure 7.11.1-5: Gen8T reformer in Lab dress 34
Figure 7.11.2-1: DPS3000D circa March 2009 (Design Freeze) 35
Figure 7.11.2-2: DFMEA Severity Analysis Rating 35
Figure 7.11.2-3: System DFMEA Work Sheet 36
Figure 7.15-1: DPS3000 Set 1 (Thermal Cycle System) 37

Figure 7.16-1: System Net Power 38
Figure 7.16-2: Stack Cell voltages 39
Figure 7.16-3: Stack Voltage 39
Figure 7.16-4: Stack Temperature 40
Figure 7.16-5: DPS3000D on Shaker Table (Vibration Testing) 40
Figure 7.16-6: DPS3000D on Vehicle 41
Figure 7.16-7: DPS3000D on Vehicle Test / Demonstration 41