Association for Information and Image Management
1100 Wayne Avenue, Suite 1100
Silver Spring, Maryland 20910
301/587-8202

Centimeter

Inches

MANUFACTURED TO AIIM STANDARDS
BY APPLIED IMAGE, INC.

1 of 1

SAND94–0228
Unlimited Release
Printed April 1994

Distribution
Category UC–335

The Interstate-40 Bridge Shaker Project

Randy L. Mayes and Michael A. Nusser
Experimental Structural Dynamics Department
Sandia National Laboratories
Albuquerque, NM 87185-5800

Abstract

New Mexico State University organized an effort to perform static and dynamic damage-detection tests on the Interstate-40 bridge over the Rio Grande at Albuquerque. The opportunity was available because the 425-ft-long bridge was soon to be replaced. Sandia National Laboratories was asked to provide and operate a shaker that could exert 1000-lb peak amplitude forces for both sinusoidal and random excitations between 2 and 20 Hz. Two Sandia departments collaborated to design and build the shaker, using existing major components connected with Sandia-designed and -fabricated hardware. The shaker was installed and operated successfully for a series of five modal and sinusoidal response tests.

MASTER

Acknowledgments

J. R. Hollingshead, Mechanical and Climatic Testing Department 2742, performed the actuator system checkout and developed the procedures for operating the shaker. S. C. Tafoya of the same department provided significant logistical support for the actuator system. Norberto Garcia and Herman Gomez of Electrical and Mechanical Team 7818-1 completed the onsite electrical wiring, and Felix Garcia and Jose Sanchez of Heavy Equipment/Generator/Support Services Team 7818-3 supplied and connected the generator and fuel tanks. Without their work, this project would not have been possible.

Contents

Introduction 1

Investigation of Capability 1

Development Work 2

Force Transmission Considerations 2

Dynamic Considerations 4

Control Considerations 5

Measuring Force Output of Shaker 7

Logistics 7

Testing Overview 9
- Sinusoidal Testing 10
- Modal Testing 10

Additional Services and Equipment Provided by Sandia 11

Future Directions 11

Figures

1 Schematic of I-40 shaker 3
2 Laboratory setup 4
3 Schematic of stinger hardware connections 5
4 Stinger hardware connections 6
5 Shaker assembly on bridge 8
6 Support equipment for shaker operation 9
7 Plan view of bridge 10

The Interstate-40 Bridge Shaker Project

Introduction

The Civil, Agricultural, and Geological Engineering Department at New Mexico State University (NMSU) received a grant from the Federal Highway Administration to develop innovative highway bridge inspection and maintenance techniques. NMSU developed a plan to test a 425-ft-long bridge that was part of Interstate-40 across the Rio Grande at Albuquerque, New Mexico. The plan included several types of static and dynamic tests designed to look for damage in the bridge. The bridge was first tested in its as-used condition. Then four increasingly severe cuts through one of the steel plate girders were made on the bridge at one location. After every cut the test series was repeated. The final cut severed the bottom half of the I-section of the plate girder.

Most of the static tests were performed by NMSU staff and students. The dynamic readings, including modal test frequency response function data and stepped sine amplitude vs. frequency data, were taken by Los Alamos National Laboratory (LANL) personnel on contract to New Mexico State. NMSU contacted Sandia National Laboratories Experimental Structural Dynamics Department 2741 to find out whether Sandia had the capability to dynamically excite the bridge with both sinusoidal and random excitation. They wanted at least 1000-lb peak forces for both types of excitation from 2 to 20 Hz. Sandia Mechanical and Climatic Testing Department 2742 collaborated with Department 2741 to adapt an existing hydraulic actuator to shake the bridge. This report documents that development and the testing that was done.

Investigation of Capability

The time for testing was short because a construction project was scheduled soon to demolish and replace the bridge. When NMSU staff investigated the capability available to shake a bridge in the vertical direction, they found the following:

- Some earthquake simulators were available in California, but they input only horizontal forces (as required for shaking buildings). These simulators might have been converted to vertical shakers given enough time and money, but shipping the equipment to Albuquerque would have involved further delay and expense.
- New Mexico State has a portable vertical shaker, but it produces only sinusoidal forces, with a maximum force capability too low for this testing. A random force capability was needed for the modal test. It was not obvious that the capability was available to exert 1000 to 2000 lb of vertical force on a bridge with either a sinusoidal or random excitation (especially down at 2 Hz).

As a result of finding no other feasible way to perform the necessary work, NMSU turned to Sandia for help.

Development Work

When New Mexico State asked Sandia for help, a work-for-others proposal was set in motion. Because this project showed promise of supporting the aging national infrastructure, funds were committed by Advanced Transportation Programs Department 9604 in addition to those committed by Departments 2741 and 2742 to design the shaker capability.

The proposed method to excite the bridge was to use an existing hydraulic actuator and control system that belonged to Department 2742. The actuator has a 6-in. stroke and a force rating of approximately 2200 lb. Because the department had just obtained the actuator, they had only operated it for a couple of checkout runs, with no load. The actuator had to be able to react against "something" to put force into the bridge.

Department 2741 had a steel seismic mass weighing nearly 11 tons that was used for fixed-base modal tests. The basic plan was to softly support the seismic (reaction) mass on three air bags (pneumatic springs) high enough above the bridge roadbed to mount the actuator between it and the roadbed. The airbags in turn would be supported by 55-gallon drums full of sand. For safety, three additional drums of sand with wood blocks on top would be used to support the mass when the air bags were not inflated and in case the air bags failed. The actuator would be bolted to the roadbed and connected to the reaction mass. Figure 1 is a schematic of the design in the elevation and plan views. Figure 2 shows the laboratory setup that was used to check the design.

Force Transmission Considerations

A load cell was needed between the actuator ram and the reaction mass to measure the output force of the actuator. The moments transmitted to the load cell needed to be eliminated because they could pollute the true axial force reading of the device. Only vertical forces could be induced into the bridge. Therefore, some aspect of the design had to address this issue. Figure 3 is a schematic of the connection between the actuator and the reaction mass, and Figure 4 is a photograph of the actual hardware during the bridge test.

The connection between the load cell and the reaction mass used two slotted plates in series to align the connection without placing a shear load and possible resulting moment between the reaction mass and the top of the actuator ram. In addition, an idea often used in modal testing was implemented: A long, thin "stinger" made of aluminum was placed between the actuator ram and the reaction mass. This stinger transmitted the axial loads, but reduced the transmission of moments. Clamps and collars were designed to connect the actuator ram to the stinger and the stinger to the load cell and alignment plates. The hardware was designed and fabricated at Sandia.

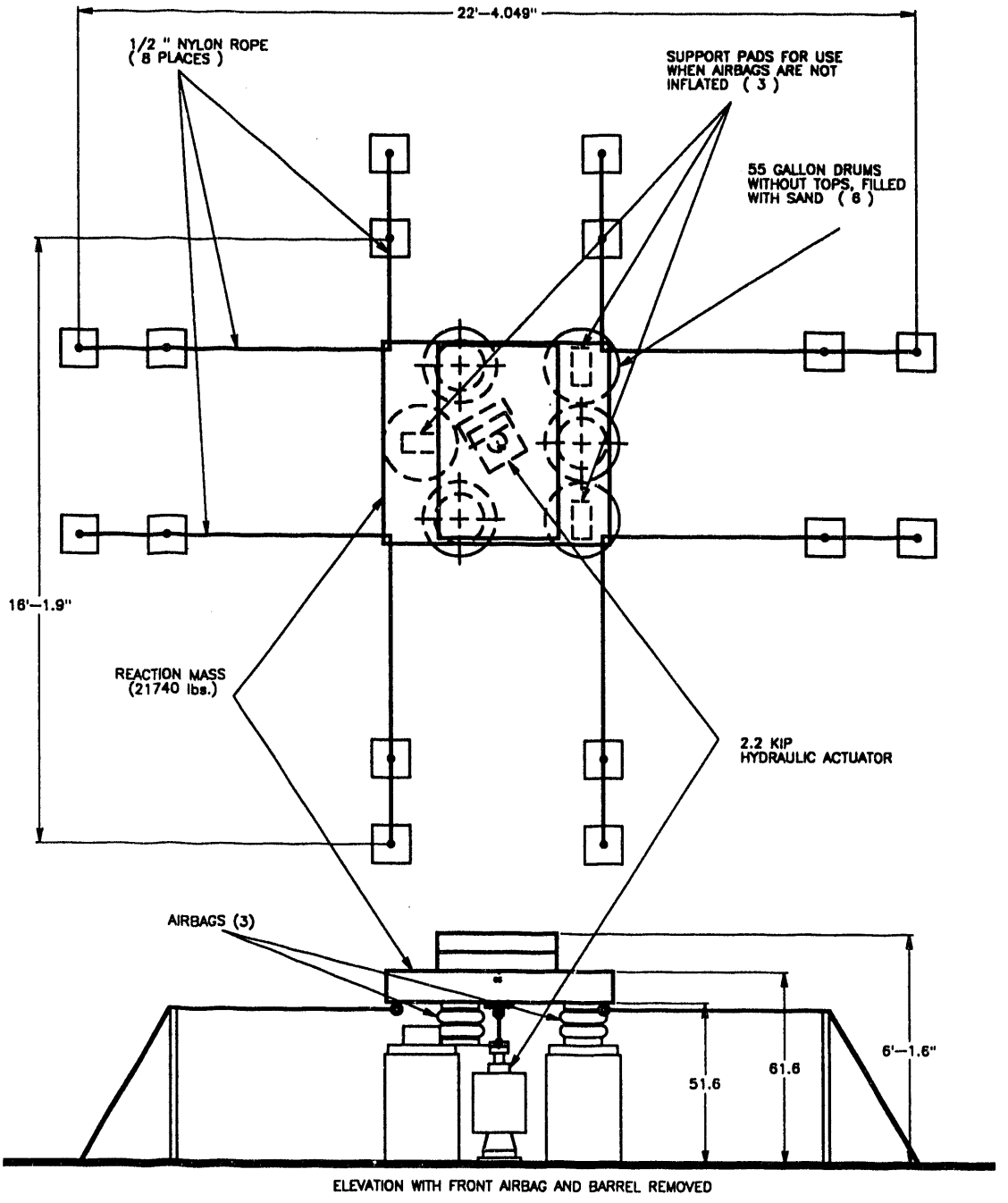

FIGURE 1. Schematic of I-40 shaker.

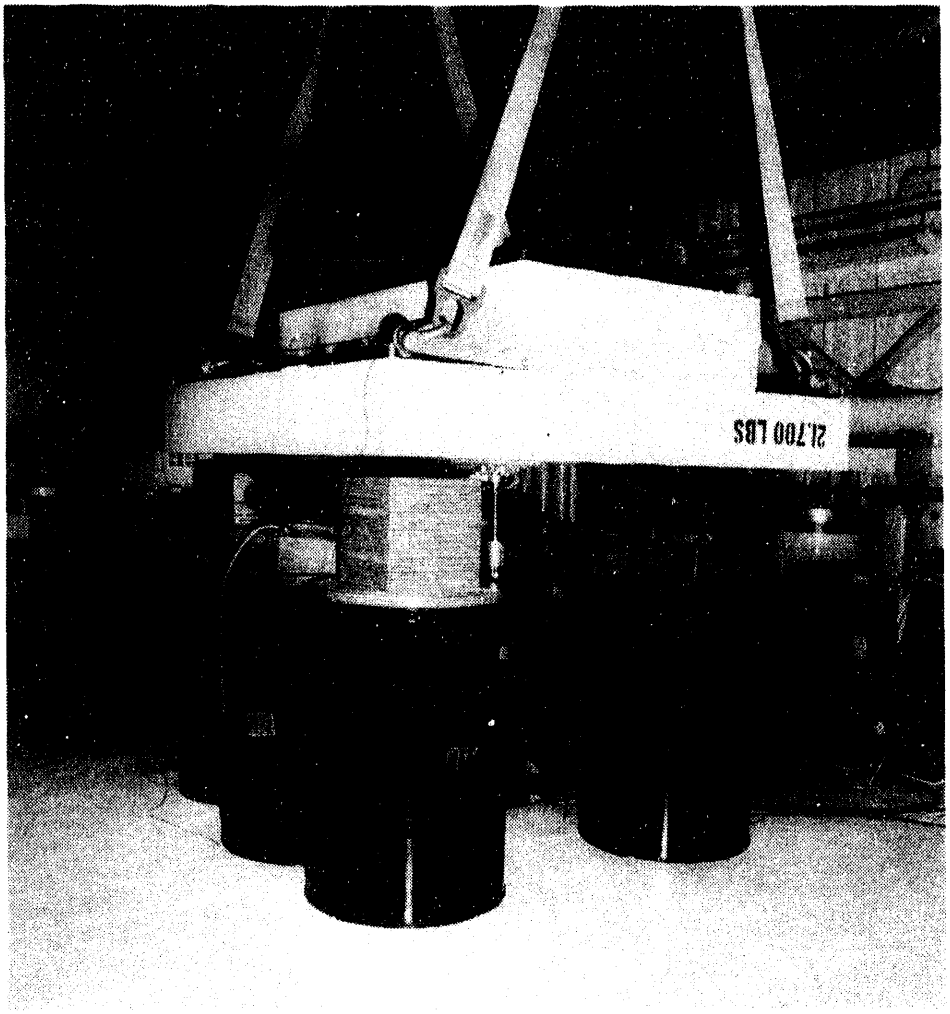

FIGURE 2. Laboratory setup.

Dynamic Considerations

A simple modal test of the shaker setup was performed in the lab. The first axial mode of the reaction mass on the air bags was at a frequency of 1.75 Hz. The first pitch mode of the reaction mass was about 2 Hz. Because the shaker was to operate sinusoidally at 2 Hz, this was of concern. To minimize the effect of the 2-Hz pitch mode, calculations were made to locate the lateral center of mass of the reaction mass. This was marked. The capability to align the reaction mass laterally in the field was implemented with ropes and turnbuckles as seen in Figure 1. In addition, these ropes provided safety constraints to limit the lateral motion of the reaction mass. Thus, the mass could be easily centered over the ram to limit the excitation of pitch modes.

The 1.75-Hz axial mode was also a concern. Therefore, the support blocks were set within 1/2 in. of the base of the mass when the shaker was operating. This setup provided a nonlinear spring to limit the travel of the reaction mass in

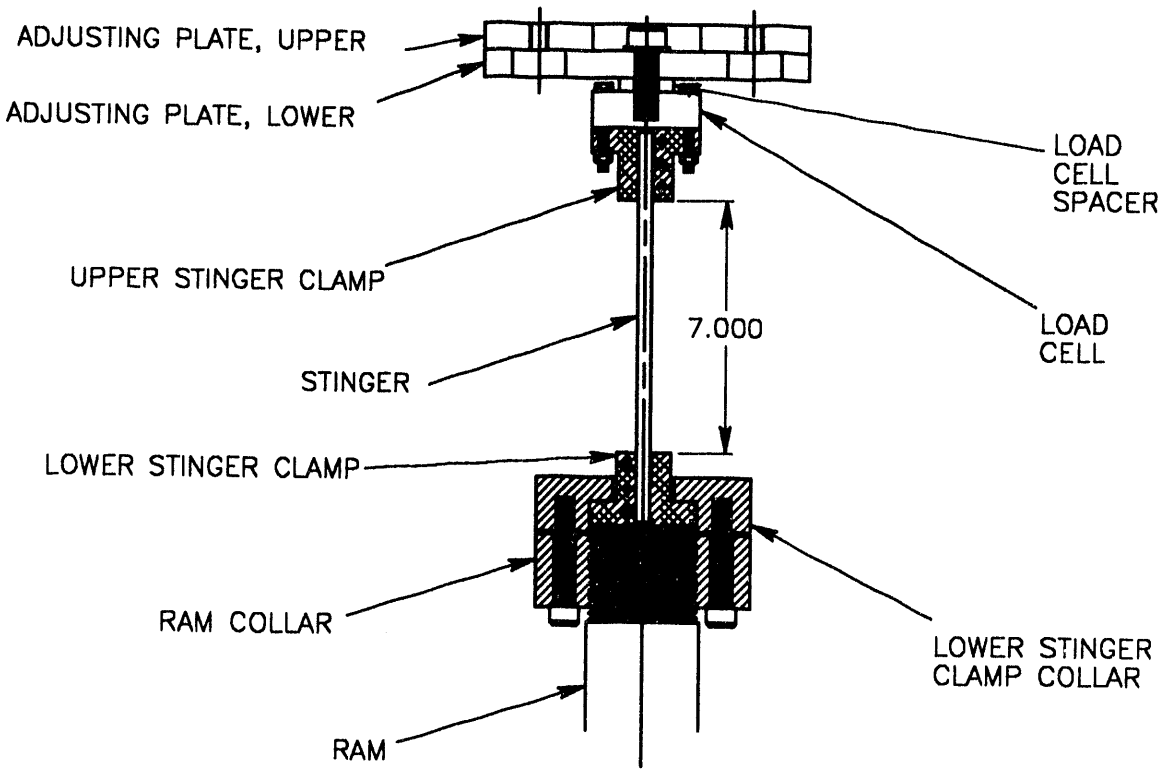

FIGURE 3. Schematic of stinger hardware connections.

case the amplitude got out of control. If the mass hit the blocks, the stinger would break and protect the expensive equipment from damage. The operator, who observed the dynamic force signals during testing to maintain the desired levels, manually controlled the sinusoidal amplitudes. This procedure was used in the field test after proving practical in the lab.

Control Considerations

During the first laboratory tests, before the actuator control system gain could be increased enough to achieve the desired force output, the first axial resonance of the structure was excited. The gain was then reduced to zero, but the resonance was still excited. The hydraulic power supply had to be shut down to stop the motion. Such performance was obviously unacceptable. This situation was analyzed as follows.

Hydraulic actuators are nonlinear devices, especially at low frequency. When the control signal was operating at any particular sinusoidal frequency, the actuator distorted the signal enough to have some frequency content down at the system axial resonance. Once this resonance was excited, the control system (operating mostly from displacement feedback) tried to bring the motion at the resonant frequency to zero. However, its phasing was such that it actually reinforced the resonance.

To solve this problem, the displacement feedback was disconnected just before the shaker was operated, and the system was run open loop. This method of manual control allowed stable operation of the shaker.

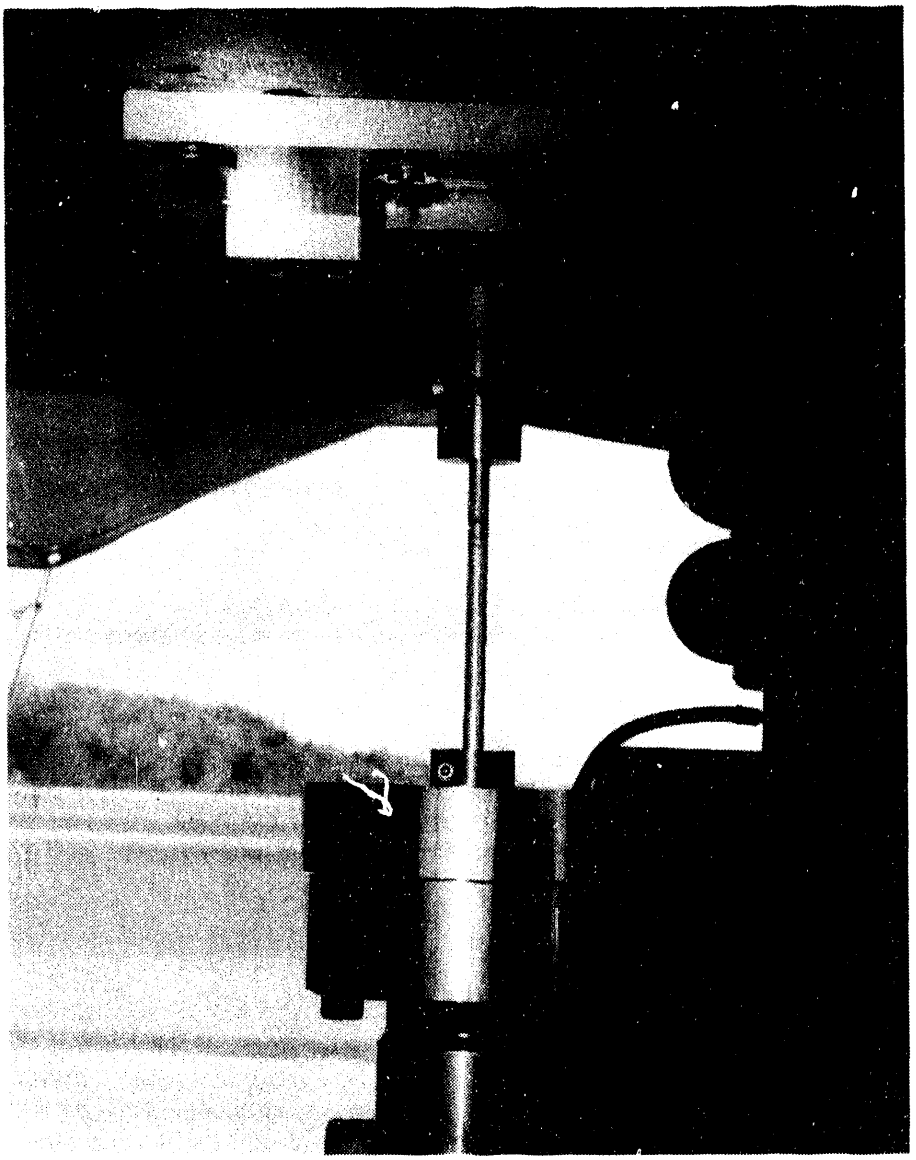

FIGURE 4. Stinger hardware connections.

Measuring Force Output of Shaker

The strain-gage-based load cell between the reaction mass and the actuator measured the static and dynamic loads in that load path. These loads were approximately the same as the load into the bridge at high frequencies. However, at lower frequencies approaching the axial resonance of the reaction mass on the air bags, much of the dynamic force was transmitted to the bridge through the air bags and drums. Therefore, the load cell could not be used as a measure of the actual dynamic load applied to the bridge.

A simple scheme was conceived to resolve this situation: Any force that accelerated the reaction mass must be induced into the bridge. An accelerometer was mounted on the reaction mass. The force was measured as the acceleration of the reaction mass multiplied by its mass. The sign was changed because the force on the bridge is opposite the force on the reaction mass. This solution accounted for forces acting through the air bags and drums as well as the actuator. The shaker operator observed the force signal on an oscilloscope during the tests and adjusted the actuator gain as necessary to achieve the desired force. The force signal was also measured in the modal tests to provide acceleration/force frequency response function data.

Logistics

For successful testing, several logistical issues had to be addressed.

- The Masthead Company moved the equipment from Sandia and installed it at the bridge site. This installation required the actuator, along with the reaction mass support pylons and tiedown plates, to be bolted to the bridge deck. The barrels full of sand were set in place with forklifts, and a crane was used to move the reaction mass off a flatbed trailer and place it on the barrel and block supports. A forklift was used to set the power supply in place. Figure 5 shows a view of the shaker assembly on the bridge.

- A tarp was sufficient to protect the mechanical equipment from the weather for several days, but a trailer had to be rented to protect two racks of electronic equipment required to control and observe responses in the shaker system.

- Security personnel were hired by NMSU to watch the equipment at night and on weekends.

- An air compressor was obtained to fill the air bags.

- To provide both 460-V/3-phase and 120-V/single-phase power, Sandia electricians set up two portable generators off the bridge. A diesel fuel tank was also set up and piped to the generators to provide fuel for several days of testing. Cables were constructed of sufficient length to bring power to the trailer, the instrumentation, and the hydraulic power supply.

- An electric centrifugal water pump was purchased to provide cold water circulation for the hydraulic power supply to remove heat generated in the unit. Long hoses, water filters, and fittings were also acquired. NMSU arranged for the State Highway Department to supply a water truck as the cooling water supply. Supply and return hoses were run from the pump and power supply to the water truck. Figure 6 shows the water truck, generators, fuel tank, and trailer.

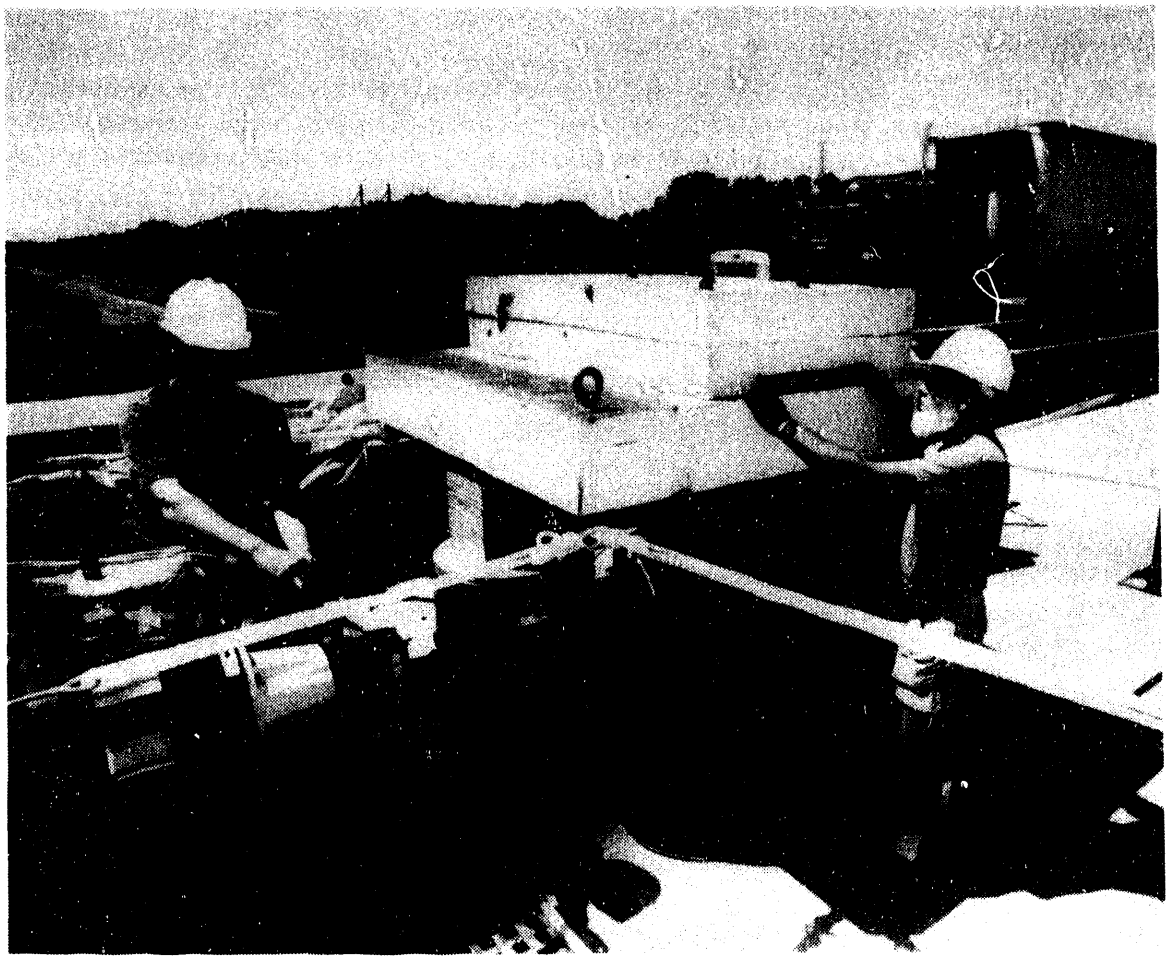

FIGURE 5. Shaker assembly on bridge.

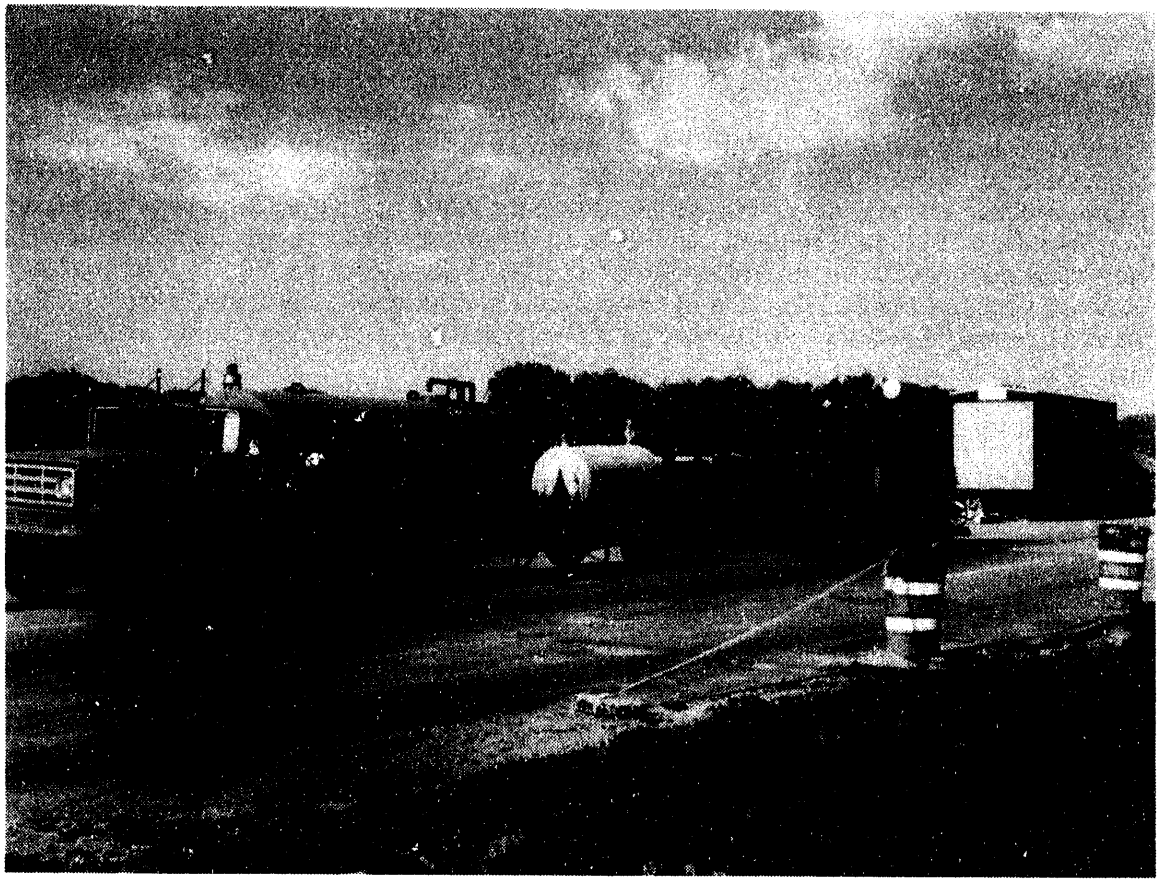

FIGURE 6. Support equipment for shaker operation.

Testing Overview

The test plan included several static and dynamic tests. Only the dynamic tests are described here.

After the equipment was installed, trial tests were performed to verify the integrity of the shaker and instrumentation systems. Then a "pristine bridge" test series was performed on the bridge in its as-used condition. After this, a cutting torch was used to introduce damage that simulated a crack in one of the main plate girders. The test series was performed again. A second, larger cut was made. The process was repeated through four increasingly severe cuts. The final cut completely severed the bottom half of the I-section in the plate girder. Figure 7 shows the plan view of the bridge, locating the Sandia shaker, the cut in the north plate girder, the abutment, and pylons. Two types of dynamic tests—sinusoidal and modal—were performed as described in the following paragraphs.

Sinusoidal Testing

Los Alamos National Laboratory staff set up an experiment that measured the dynamic bridge deflections at the midpoint of each of the main plate girders by using microwave dish sensors located on the ground under each of the two measurement points. LANL staff provided a sinusoidal signal of the frequency they desired to Sandia control instrumentation. Sandia personnel applied appropriate gain to the signal to provide the desired force amplitude. Initially, LANL requested 1000-lb (zero to peak) amplitude. When Sandia personnel supplied this, it saturated LANL's instrumentation at the resonances; consequently, the amplitude was reduced to 500 lb. The data obtained in a stepped sine fashion was amplitude vs. frequency. It started at 2 Hz and stepped through incremental frequencies up to about 5 Hz.

Modal Testing

LANL staff set up the instrumentation to acquire frequency response functions at 26 locations along the two main plate girders. Sandia's shaker provided random force inputs from 2 to 12 Hz. The force and responses were measured by using 30 averages. In addition, random excitation needed by Texas A&M staff attempting to locate the damage was provided for an additional 10 accelerometer locations.

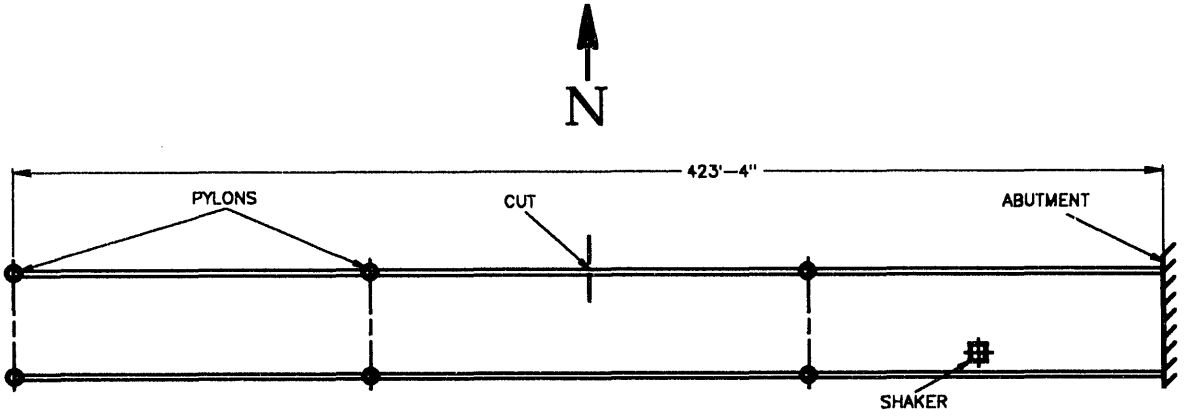

FIGURE 7. Plan view of bridge.

Additional Services and Equipment Provided by Sandia

Because a late request from Texas A&M for 10 additional accelerometer locations during the modal test exceeded the supply of accelerometers available to LANL, Sandia's modal testing group lent LANL 10 accelerometers and cables to fulfill this additional requirement. When the first modal test was ready to begin, some of the LANL instrumentation failed. A member of Sandia's modal testing group involved in the shaker operation helped LANL personnel diagnose that the failure was associated with certain accelerometers. Because LANL personnel did not have enough accelerometers to replace all the bad ones, Sandia lent LANL additional replacement accelerometers from the modal testing group. Instrumentation problems often occur in modal tests, and Sandia's modal testing group was privileged to be able to contribute in this additional way to the success of the five modal tests.

Future Directions

For remote nondestructive tests (outside of Albuquerque), the bridge testing system would need modifications to be practical. The ideal situation would be to develop a flatbed transport trailer from which the system could be deployed in a few hours. A new, reduced-weight seismic mass could be used, and a small control-room enclosure could be mounted on the bed along with the hydraulic power supply, water tank, cooling water pump, and auxiliary equipment. The bed of the trailer could be used as the safety support system, reducing the space required for the footprint to less than one lane width. The only other equipment needed would be the portable 460-V/ 3-phase generator. Such a system could be used to perform nondestructive vibration testing anywhere in the country.

DISTRIBUTION:

3 New Mexico State University
Department of Civil Engineering
Attn: John Minor (1)
Ken White (2)
Box 30001, Dept 3CE
Las Cruces, NM 88003-0001

1 Texas A&M University
Department of Civil Engineering
Attn: Norris Stubbs
College Station, TX 77843-3136

1 Los Alamos National Laboratory
Attn: C. R. Farrar, MS J576
PO Box 1663
Los Alamos, NM 87545

1	MS 0439	D. R. Martinez, 1434
1	0517	D. W. Doak, 2010
1	0507	R. A. David, 2700
1	0557	G. H. James, 2741
25	0557	R. L. Mayes, 2741
1	0557	M. A. Nusser, 2741
5	0555	J. R. Garcia, 2742
1	1135	J. R. Hollingshead, 2742
1	1380	O. D. Thompson, 4201
1	1380	C. A. Lombana, 4212
1	0755	M. W. Moulton, 6612
1	0766	J. R. Kelsey, 9600
3	0767	S. C. Roehrig, 9604
1	9018	Central Technical Files, 8523-2
5	0899	Technical Library, 7141
1	0619	Technical Publications, 7151
10	0100	Document Processing, 7613-2 For DOE/OSTI

DATE FILMED

6/22/94

END