2

DOE/MC/11076--3032

DE92 001105

Laboratory Simulation Studies of Steady-State and Potential Catalytic Effects in the ROPE™ Process

Received OSTI

MAR 0 2 1992

Topical Report

F.D. Guffey
P.A. Holper

December 1990

Work Performed Under Cooperative Agreement No.: DE-FC21-86MC11076

For
U.S. Department of Energy
Office of Fossil Energy
Morgantown Energy Technology Center
Morgantown, West Virginia

By
Western Research Institute
Laramie, Wyoming

MASTER

DISTRIBUTION OF THIS DOCUMENT IS UNLIMITED

DISCLAIMER

This report was prepared as an account of work sponsored by an agency of the United States Government. Neither the United States Government nor any agency thereof, nor any of their employees makes any warranty, express or implied, or assumes any legal liability or responsibility for the accuracy, completeness or usefulness of any information, apparatus, product, or process disclosed, or represents that its use would not infringe privately owned rights. Reference herein to any specific commercial product, process, or service by trade name, trademark, manufacturer, or otherwise, does not necessarily constitute or imply its endorsement, recommendation, or favoring by the United States Government or any agency thereof. The views and opinions of authors expressed herein do not necessarily state or reflect those of the United States Government or any agency thereof.

This report has been reproduced directly from the best available copy.

Available to DOE and DOE contractors from the Office of Scientific and Technical Information, P.O. Box 62, Oak Ridge, TN 37831; prices available from (615)576-8401, FTS 626-8401.

Available to the public from the National Technical Information Service, U.S. Department of Commerce, 5285 Port Royal Rd., Springfield, VA 22161.

DOE/MC/11076-3032
(DE92001105)

Laboratory Simulation Studies of Steady-State and Potential Catalytic Effects in the ROPE™ Process

Topical Report

F.D. Guffey
P.A. Holper

December 1990

Work Performed Under Cooperative Agreement No.: DE-FC21-86MC11076

For
U.S. Department of Energy
Office of Fossil Energy
Morgantown Energy Technology Center
P.O. Box 880
Morgantown, West Virginia 26507-0880

By
Western Research Institute
P.O. Box 3395
University Station
Laramie, Wyoming 82071

TABLE OF CONTENTS

	Page
LIST OF TABLES	iv
LIST OF FIGURES	vi
SUMMARY	vii
INTRODUCTION	1
ROPE™ PROCESS DESCRIPTION	2
EXPERIMENTAL	4
Resource Preparation and Verification	4
Experimental Apparatus	5
Experimental Conditions	7
Model-Compound Studies	7
Bitumen Extraction	8
Analytical Procedures	8
Sample Preparation	8
Sample Preservation	8
Elemental Analysis	9
Residual Char By Combustion	9
Model-Compound Determination	9
Saturate, Aromatic, Resin, and Asphaltenes Determination	9
RESULTS AND DISCUSSION	9
Definition of Products	9
Bitumen Extraction	10
Experiments Investigating Recycling SAE 50 Weight Oil	10
Material Balance Closures	12
Organic Product Distribution	16
Chromatographic Separation of the Heavy Oils	20
Elemental Composition	23
Model-Compound Analysis	25
Theoretical Approach to Steady State	27
The Steady-State Condition	28
Potential Catalytic Effects of the Sand Matrix	29
CONCLUSIONS	33
ACKNOWLEDGEMENT	35
DISCLAIMER	35
REFERENCES	36

LIST OF TABLES

Table		Page
1.	Properties of Asphalt Ridge Tar Sand from Duplicate Analyses	11
2.	Mass Balances for the Heavy Oil Recycle Experiments Conducted at 375°C	13
3.	Mass Balances for the Heavy Oil Recycle Experiments Conducted at 400°C	14
4.	Mass Balances for the Heavy Oil Recycle Experiments Conducted at 425°C	15
5.	Weight Percentage of Heavy Oil Recovered from Each Experiment	17
6.	Organic Product Distribution for the Heavy Oil Recycle Experiments at 375°C, wt %	18
7.	Organic Product Distribution for the Heavy Oil Recycle Experiments at 400°C, wt %	18
8.	Organic Product Distribution for the Heavy Oil Recycle Experiments at 425°C, wt %	19
9.	Asphaltene Concentration of the Recovered Heavy Oils from the Heavy Oil Recycle Experiments, wt %	21
10.	Compound Class Distribution for the Heavy Oils at 375°C, wt %	21
11.	Compound Class Distribution for the Heavy Oils at 400°C, wt %	22
12.	Compound Class Distribution for the Heavy Oils at 425°C, wt %	22
13.	Elemental Analyses of Selected Distillate Samples from the Heavy Oil Recycle Experiments at 400°C	24
14.	Elemental Analyses of Selected Distillate Samples from the Heavy Oil Recycle Experiments at 425°C	24
15.	Elemental Analyses of Selected Heavy Oil Samples from the Heavy Oil Recycle Experiments at 375°C	24
16.	Elemental Analyses of Selected Heavy Oil Samples from the Heavy Oil Recycle Experiments at 400°C	26

LIST OF TABLES (Continued)

Table		Page
17.	Elemental Analyses of Selected Heavy Oil Samples from the Heavy Oil Recycle Experiments at 425°C.....	26
18.	Results of GC/MS Analysis of SARA Fractions from the Heavy Oils Produced at 400°C, area %.....	26
19.	Calculated Number of Cycles to Reach Steady State.....	28
20.	Mass Balances for the Experiments Investigating the Potential Catalytic Effects of the Sand Matrix.....	31
21.	Organic Product Distribution for the Experiments Investigating the Potential Catalytic Effects of the Sand Matrix, wt %.....	31
22.	Summary of Organic Products From Experiments Using Raw Tar Sand or Extracted Bitumen, wt %.....	32

LIST OF FIGURES

Figure		Page
1.	Schematic Diagram of the Process Development Unit, PDU....	3
2.	Schematic Diagram of the Laboratory Simulation Reactor Used to Model the Recycle Oil Pyrolysis Zone.....	6

SUMMARY

The Western Research Institute is currently developing a process for the recovery of distillable liquid products from alternate fossil fuel sources such as tar sand and oil shale. The processing concept is based on recycling a fraction of the produced oil back into the reactor with the raw resource. This concept is termed the recycle oil pyrolysis and extraction (ROPE™) process. The conversion of the alternate resource to a liquid fuel is performed in two stages. The first recovery stage is performed at moderate temperatures (325-420°C [617-788°F]) in the presence of product oil recycle. The second stage is performed at higher temperatures (450-540°C [842-1004°F]) in the absence of product oil.

Previous research has been performed in the 2-inch process development unit (PDU), the 6-inch bench-scale unit (BSU), and basic studies in the laboratory simulation reactor. The large-scale experiments have provided data for engineering development of the concept and evaluation of the end-use potential of the liquid products. The research conducted in the laboratory simulation reactor has provided basic data to understand the fundamental processes controlling the overall process. The research presented in this report is a continuation of the effort to provide a description of the fundamental processes.

The experiments reported here were performed using Asphalt Ridge tar sand in the all-glass laboratory simulation reactor to simulate (1) the recycling of SAE 50 weight oil in the recycle oil pyrolysis zone and (2) to evaluate the potential catalytic effects of the sand matrix. Steady-state operation of the PDU has not been well defined and has been questioned by critics of the ROPE concept. The research conducted to evaluate the continued recycling of SAE 50 weight oil was directed at evaluating the approach to steady state and the composition of the heavy oil at steady state. The research has shown that steady state can not be easily achieved at an operating temperature of 375°C (707°F) because the reaction rate is too slow to bring about the changes in the heavy oil necessary to reach this condition. Steady state can not be achieved at an operating temperature of 425°C (797°F) because the recovery of heavy oil is significantly less than the initial heavy oil inventory and the recycle needs can not be met to sustain the process.

Steady-state operation has been demonstrated at an operating temperature of 400°C (752°F). The condition was achieved after ten cycles of the heavy oil, and is equivalent to approximately eight hours of operation in the PDU. This finding agrees well with the previous estimate of the time required to reach steady-state operation from evaluation of the PDU experiments.

The possible catalytic effects of the sand matrix were also evaluated, and it was determined that the sand matrix does not have significant catalytic effect. These results mean that the process energy requirements, and operation and construction costs may be reduced by disengaging the majority of the solids from the liquids before the material enters the pyrolysis zones of the reactor.

INTRODUCTION

The Western Research Institute (WRI) is currently developing a process for the recovery of distillable liquid products from alternate fossil fuel sources such as tar sand and oil shale. The processing concept is based on recycling a fraction of the produced oil back into the reactor with the raw resource. This concept is termed the recycle oil pyrolysis and extraction (ROPE™) process. The conversion of the solid resource to a liquid fuel is performed in two stages. The first recovery stage is performed at moderate temperatures (325-420°C [617-788°F]) in the presence of produced oil recycle. The second stage is performed at higher temperatures (450-540°C [842-1004°F]) in the absence of produced oil recycle. Research has been performed in a 2-inch process development unit (PDU), a 6-inch bench-scale unit (BSU), and in the laboratory simulation reactor.

The research using the PDU and BSU investigated the recovery of liquid products from tar sands, eastern oil shale, and western oil shale. These investigations have been directed at solving engineering problems involved in developing a commercial process and demonstrating the potential market value of the liquid products. The results from these investigations have been published as project milestone reports to the U.S. Department of Energy and as the proceedings of technical meetings (Cha et al. 1986, 1988, 1990) The PDU investigations, because of the large scale and complexity of the reactor systems, did not provide data that can be used to determine the fundamental processes that occur during resource conversion. For this reason, a basic understanding of the factors that control the process could not be developed.

The research conducted with the laboratory simulation reactor provided data to understand the fundamental aspects of the ROPE process. The tar sand preheat zone functions as a region for solubilization of the raw tar sand. The soluble fraction of the tar sand bitumen appears to go completely into solution in the recycle oil within five minutes. This is much less time than the residence time of the material in this zone; therefore, solubilization of the bitumen is a process that is not rate limiting. The results suggest that pyrolysis is not initiated in this zone. The products that are distilled from this zone are formed in other parts of the reactor and are collected from this zone. The distillate is produced by distillation of the lower distilling material in the recycle oil because Asphalt Ridge tar sand does not contain bitumen fractions that will vaporize at the temperature of this zone.

The recycle oil pyrolysis zone of the reactor functions as the initial region for pyrolysis of recycle oil and tar sand bitumen. The degree of pyrolysis increases, as expected, with increasing temperature. Char production is observed from the pyrolytic reaction, but gas production is not observed. Model-compound studies performed during this research suggest that hydrogen transfer from hydroaromatic species (model compounds) to the bitumen pyrolysis reactions occurs in this zone of the process.

The recycle oil pyrolysis zone accelerates the pyrolytic reactions and produces additional char as well as distillate. The material balances suggest that the gas production may be increased in this zone; however, the design of the experimental apparatus did not allow for the gas production to be measured (Guffey and Hunter 1989).

The results presented in this report are from current investigations to study the effects of recycling SAE 50 weight motor oil to achieve steady-state operating conditions and to evaluate the potential catalytic effects of the sand matrix.

ROPE PROCESS DESCRIPTION

The design and operation of the PDU is described in detail by Cha et al. (1986, 1988), but it will be summarized here. The PDU can be divided into four processing zones. The four zones are identified as (1) tar sand feed zone, (2) tar sand preheat zone, (3) recycle oil pyrolysis zone, (4) recycle oil drying zone, and (5) spent solids collection. Figure 1 shows a schematic of one of the earlier versions of the PDU. We chose to illustrate this particular version because the individual zones are more easily identified than they are in the more recent schematics of the PDU.

The tar sand feed zone is the first inclined screw in the reactor and serves as a conveyor to supply the raw tar sand to the reactor. This zone operates near ambient temperature.

The tar sand preheat zone is the second inclined screw (Figure 1) region of the reactor. This zone of the reactor is operated between 204 and 260°C (400 and 500°F), and the material entering this zone has a residence time of 15 to 25 minutes. In this zone, raw tar sand is fed into the reactor with the recycle oil that is produced from the other processing zones. The recycle oil mixes with the tar sand and extracts the bitumen that is soluble in the recycle oil. Volatile material in the recycle oil and the extracted bitumen are removed from the reactor by distillation processes at the operating temperature. The recovered product (knock-out 1 distillate) is not recycled back into the reactor. Pyrolysis of the recycle oil and the extracted bitumen does not begin in this zone of the reactor. The bitumen-recycle oil solution and the sand that may be coated with insoluble bitumen pass into the recycle oil pyrolysis zone for further processing.

The recycle oil pyrolysis zone (Figure 1) initiates the pyrolysis of the recycle oil, soluble bitumen, and the insoluble bitumen adhering to the sand. This zone of the reactor is operated between 325 and 420°C (617 and 788°F) and the residence time of the material is between 30 and 45 minutes. The solution of recycle oil and bitumen is removed from the reactor for recycle as the solid material enters this zone. The recycle oil is injected into the reactor farther downstream and is recycled counter current. Pyrolysis of the recycle oil, the soluble bitumen, and the insoluble bitumen adhering to the sand occurs in this zone of the reactor. The pyrolysis products that are volatile at the operating temperatures are recovered and collected at knock-out 2. This product

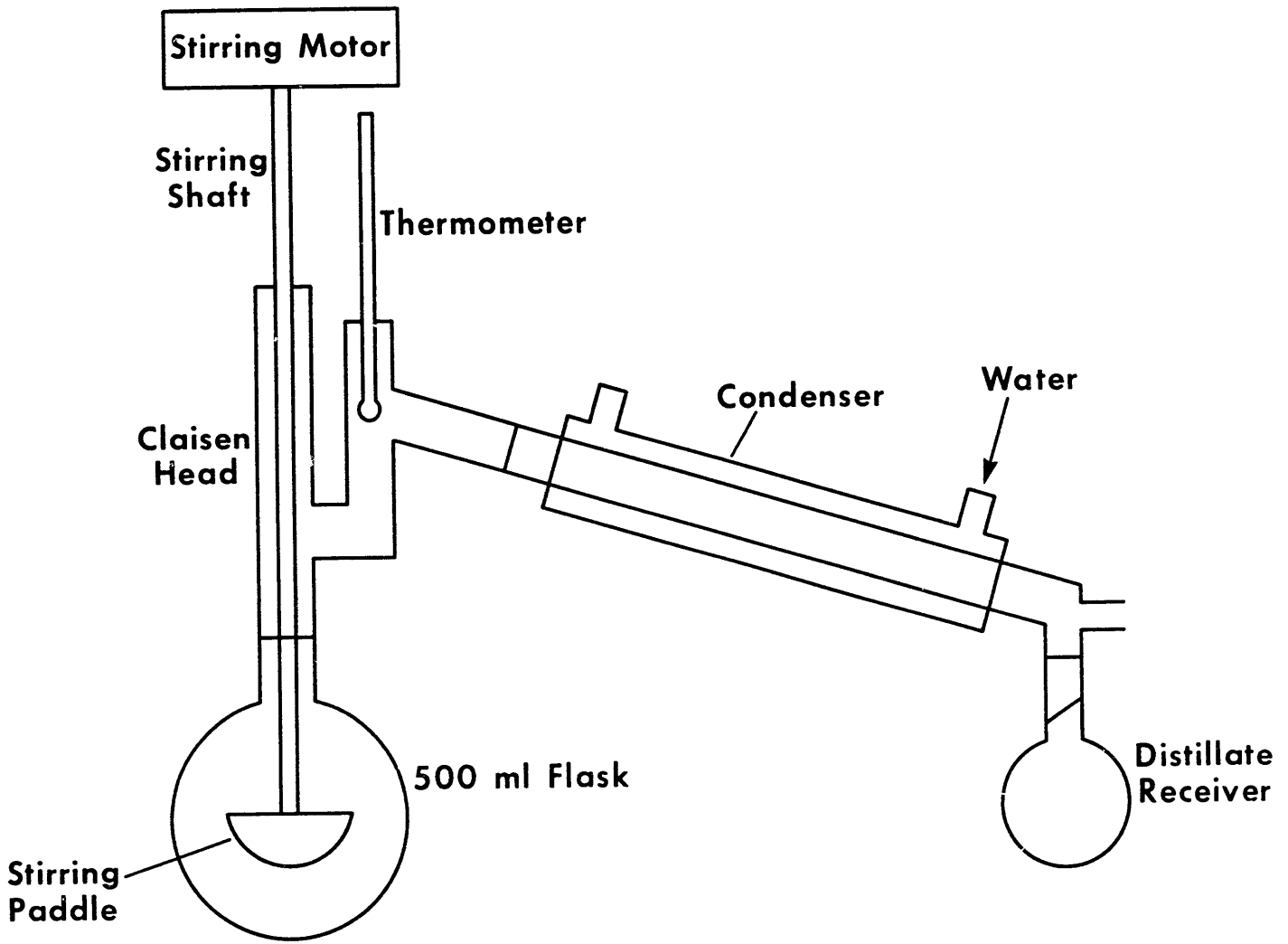

Figure 1. Schematic Diagram of the Process Development Unit, PDU

can be recycled to the reactor at the tar sand preheat and recycle oil drying zones. The nonvolatile material is recycled as heavy oil and is renewed with recycle oil and bitumen solution from the tar sand preheat zone. The solids pass into the recycle oil drying zone for further processing.

The recycle oil drying zone is the fourth reactor screw. This region of the reactor is operated between 450 and 540°C (842 and 1004°F). The residence time of the material in this zone varies between 30 and 45 minutes. This zone acts as a disengaging area for the nonvolatile heavy oil and the solid material (sand with adhering insoluble bitumen). The temperature of the zone increases as the distance into the zone increases, and this assists in removing the oil by volatilization and decreasing viscosity of the heavy oil. At these relatively high temperatures, pyrolysis of the heavy oil, solubilized bitumen, and insoluble bitumen occur. The volatile products from this zone are collected at knock-out 3. The solid material, after being stripped of heavy oil, enters the spent solids collection. In a commercial process, the spent sand that is coated with the residual char enters a residual char combustion zone (not shown in Figure 1). The residual carbon-containing material may be combusted to produce clean sand, gaseous combustion products, and heat for use by the process.

EXPERIMENTAL

Resource Preparation And Verification

Approximately 9 kg (20 lb) of Asphalt Ridge tar sand was obtained from WRI storage. The tar sand sample was stored in a steel drum under a nitrogen atmosphere. The surface layer of tar sand was removed and discarded to ensure the sample taken for study was not oxidized. The following approach was used to obtain the most representative samples possible and to verify the uniformity of the samples used for the experiments. The 9 kg (20 lb) of tar sand was frozen with solid carbon dioxide and crushed in the presence of additional solid carbon dioxide in a jaw crusher chilled with solid carbon dioxide. The crushed tar sand material was placed in a 18.9 L (5 gal) container with additional solid carbon dioxide and sealed. The container was tumbled for 30 minutes to mix the contents.

The mixed tar sand material was sampled to provide aliquots of approximately 200 g each. The samples were stored in sealed containers, under a nitrogen blanket at -4°C (25°F). Two samples were selected at random for analysis to determine the variability of the sampling procedure. Each sample was analyzed to determine the bitumen saturation and elemental composition of the bitumen.

Before each experiment, a sample of raw tar sand was selected from storage. The sample was carefully ground using a mortar and pestle to produce a 100 g-sample with a particle size distribution of 0.16 to 0.32 cm (0.063 to 0.125 inch). The prepared sample was kept chilled with solid carbon dioxide until it was introduced into the reaction vessel.

The heavy recycle oil used for the experiments to evaluate the continued recycling of SAE 50 weight oil was the same oil used in previous PDU experiments. The heavy recycle oil used for the experiments to investigate potential catalytic effects of the sand matrix was a composite heavy oil prepared by mixing the heavy recycle oil remaining from the experiments to evaluate the recycling of SAE 50 weight oil.

Experimental Apparatus

The laboratory simulation reactor used in this study was operated in a mode to simulate the recycle oil pyrolysis zone because this zone represents the area of the process where the highest residence time for the heavy recycle oil is observed. The laboratory simulation reactor is shown schematically in Figure 2. The reactor consists of a glass reaction vessel (500-mL round-bottom flask) with a Claisen distillation head attached to the vertical neck of the flask. The distillate is condensed through a conventional water-cooled condenser and collected. The temperature of the distillate is measured by a thermometer mounted in the Claisen head. The contents of the reactor are stirred by a motor-driven stirring shaft fitted with a single-blade paddle.

The reaction vessel was heated using a pair of heating mantles that were manually controlled to ±5°C (±9°F) of the set-point temperature using variable resistance controllers. The temperature of the reactor was monitored with thermocouples. Two thermocouples were placed against the outer glass wall of the reaction vessel such that one thermocouple monitored the temperature of the lower mantle and the other thermocouple monitored the temperature of the upper mantle.

Possible gaseous-product evolution was monitored using a positive displacement device. The vacuum port of the distillation receiver was connected to a stainless steel tube passing through a single-hole rubber stopper. The stopper was fitted in a 1000-mL vacuum filtration flask filled with water to the vacuum port. The stainless steel tube was adjusted so that the end of the tube was at the bottom of the filtration flask. A rubber hose was connected to the vacuum port of the filtration flask and the other end emptied into a 1000-mL graduated cylinder. As gas was produced in the closed system, water was displaced from the filtration flask to the graduated cylinder, and the volume of water displaced was measured. The volume of water displaced was equal to the volume of gas produced.

The process simulation reactor was operated by adding 100 g of the recycle oil and 100 g of tar sand, and assembling the reactor. The reactor was purged with nitrogen gas to expel residual air, and the reactor was brought to the desired experimental temperature. The experiment clock was started when the temperature reached to the set point. The experiment was stopped, and the reactor was quenched when 45 minutes had elapsed on the experimental clock.

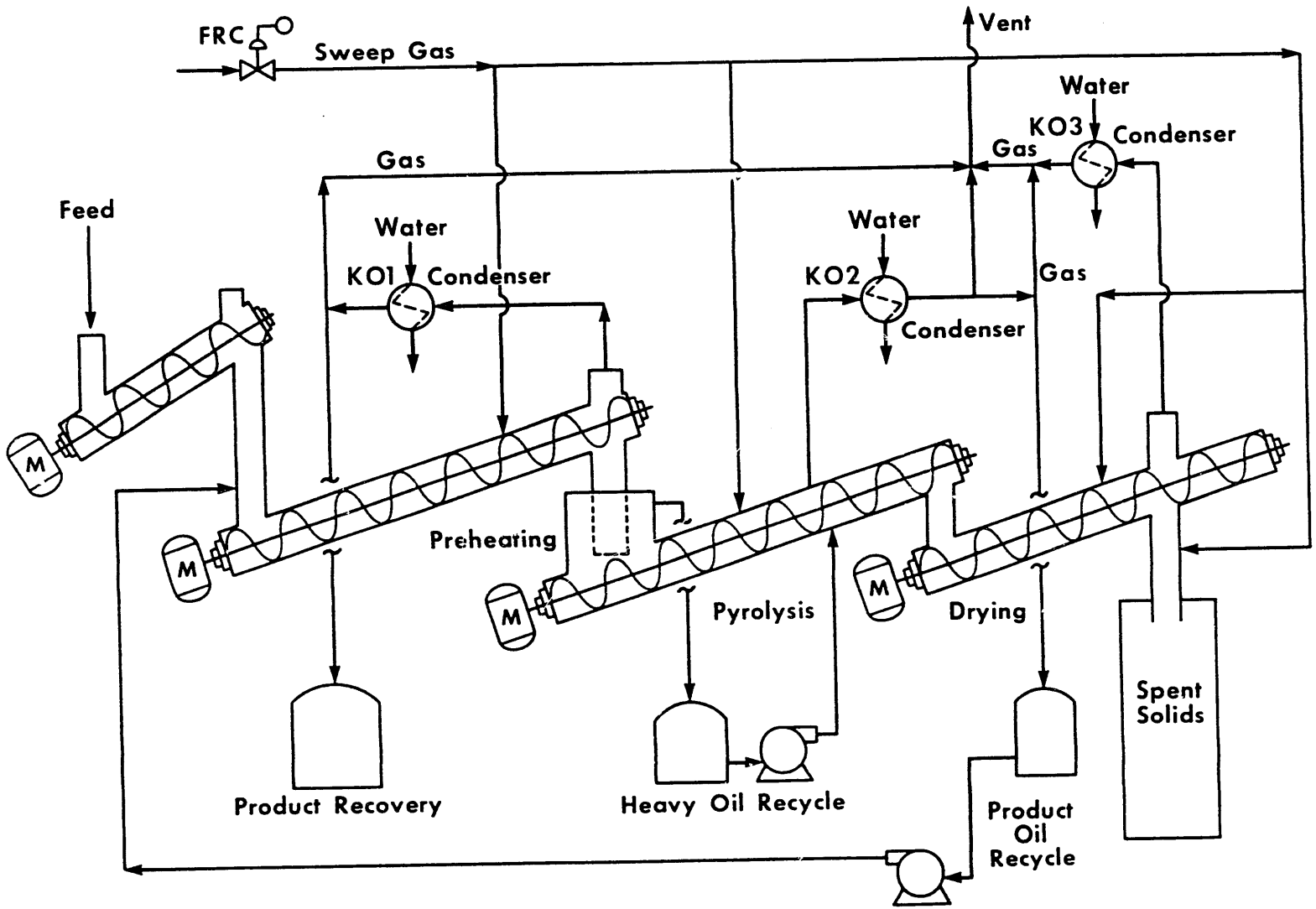

Figure 2. Schematic Diagram of the Laboratory Simulation Reactor Used to Model the Recycle Oil Pyrolysis Zone

Experimental Conditions

Three series of experiments were conducted to investigate the effects of recycling SAE 50 weight oil to a condition that represented steady-state operation of the PDU. Each series of experiments was conducted at a different temperature in the operating range of the recycle oil pyrolysis zone. The three temperatures selected to span this range are 375, 400, and 425°C (707, 752, and 797°F).

The experimental time for each experiment was selected at 45 minutes. The maximum residence time in this zone of the reactor was chosen because the longer residence time should decrease the number of experiments required in the laboratory simulation reactor to achieve a condition that represents steady state in the PDU. The laboratory simulation reactor is a batch reactor and was used to simulate the approach to steady state in the continuous feed PDU. This was accomplished by recycling the heavy oil from one experiment to the next. The first experiment in each temperature series was started with SAE 50 weight oil as the initial heavy oil. Each successive experiment used the product heavy oil from the previous experiment as the initial heavy oil.

The experiments to investigate the potential catalytic effects of the sand matrix were conducted at 400°C (752°F) because this temperature has been demonstrated to be the optimum temperature for processing Asphalt Ridge tar sand (Guffey and Hunter 1989) One-half of these experiments were conducted using raw tar sand. The second half of the experiments were conducted using extracted bitumen. The mass of bitumen used was equal to 13.3 weight percent of the raw tar sand used in the experiments investigating catalytic effects of the sand. This weight of bitumen provided the equal mass ratio of heavy oil and bitumen (8:1) in the reactor as when equal masses of raw tar sand and heavy oil are used in the reactor. The heavy oil used in these experiments was a composite heavy oil generated by mixing the remaining heavy oil from each of the three series of steady-state experiments. The composite heavy oil was divided into two equal portions. One portion was used only in the experiments with raw tar sand, and the second portion was used with bitumen. The heavy oil was recycled for each series of experiments.

Model-Compound Studies

The chemistry of fossil fuel systems is difficult to study because there is a large number of compounds present in the material and because the concentration of the individual species is typically low. Model compounds were used to evaluate the process as it approached a condition that represents steady state after starting with SAE 50 weight oil. Three model compounds were selected for this study that represent the major classes of hydrocarbons detected in products from previous PDU tests. The three model compounds are (1) n-octadecane (alkane), (2) phenanthrene (aromatic), and (3) anthracene (aromatic). The two aromatic compounds were used as model compounds because their similar structures and gas chromatographic retention times makes the model-compound analysis easier. The recycle oil was prepared by making a

solution of the model compounds in the SAE 50 weight oil. The solution was prepared so that the concentration of each model compound in the solution was approximately 1 wt %.

The SAE 50 weight oil spiked with the model compounds was used as the recycle oil for the experiments investigating the effects of continued recycling during the approach to steady state. The changes in the concentration of the model compounds in the heavy oil was used to evaluate the approach to a condition that approximates steady state during processing. The concentration of each model compound in the product heavy oil was determined using mass spectrometric techniques.

Bitumen Extraction

Two samples of the raw tar sand were randomly selected from the 200-g samples to evaluate the sampling procedure and to determine the variability of the samples. A 100-g sample was extracted for 24 hours with toluene in a Soxhlet extractor. The toluene extraction was followed by a 24-hour pyridine extraction. The solvent was removed from each extract by thin-film evaporation, and the bitumen content was determined gravimetrically. The toluene extracts were subjected to elemental analysis. The extracted sand was subjected to residual organic carbon analysis by combustion.

Analytical Procedures

This section describes the preparation and preservation procedures used for samples generated during this research, and the analytical methods used for analysis of the samples. Routine analyses such as viscosity and specific gravity were not performed on the samples generated during these experiments. The scale of these experiments was too small to produce the quantity of sample required for these analyses.

Sample Preparation

Three types of samples were collected from all of the experiments: (1) distillate product, (2) heavy oil, and (3) spent sand. The material in the reactor at the end of each experiment was composed of heavy oil and spent sand, which had to be separated. The heavy oil was washed from the spent sand with a toluene rinse and filtered to separate the liquid from the solids. The toluene was removed from the heavy oil by thin-film evaporation.

Sample Preservation

After preparation, the liquid samples (distillate products and heavy oils) were preserved by storing them in glass containers with Teflon lid liners under a nitrogen gas atmosphere at 4°C (39°F). The spent sand samples were stored in glass containers with Teflon lid liners under a nitrogen gas atmosphere at room temperature.

Elemental Analysis

Elemental analyses were performed on selected samples of distillate and heavy oil using standard WRI analytical methods. The elements that were quantitated include carbon, hydrogen, nitrogen, and sulfur.

Residual Char By Combustion

The residual char (organic material) that remained on the spent sand was determined by combustion of the organic material. The spent sand was first dried at 110°C (230°F) for 24 hours to remove absorbed water and then weighed. The dried samples were combusted at 455°C (850°F) for 24 hours to burn off the organic material. The combusted sand was weighed. The weight percentage of char was determined as the weight loss by combustion of the spent sand sample.

Model-Compound Determination

The model compounds were quantitated in the heavy oils using a classical total ionization approach based on GC/MS analysis of the samples. The area response of each model compound was measured from the reconstructed ion current chromatogram. The percentage ionization of this area to the total ionization area was calculated.

Saturate, Aromatic, Resin, and Asphaltenes Determination

A class separation to determine the concentration of saturated hydrocarbons, aromatic hydrocarbons, resins, and asphaltenes (SARA) was performed on all of the heavy recycle oils generated during the experiments conducted to evaluate the effect of recycling SAE 50 weight oil to a condition that represents steady-state operation in the PDU. This separation was conducted by first precipitating the asphaltenes from the heavy oil in normal pentane (1 g heavy oil to 40 mL pentane). The remaining classes of compounds were separated by elution over active alumina. Twenty grams of active alumina are charged to a 0.95- x 40.6-cm (0.375- x 16-inch) column. A sample of the deasphalted heavy oil (0.25 g) is added to the top of the column and 2 cm of alumina is placed on top of the sample to prevent disturbing the sample when solvent is added. The saturated hydrocarbons were eluted with 60 mL of hexane. The aromatic hydrocarbons were eluted with 30 mL of toluene. The resin fraction was recovered by passing 30 mL of toluene/methanol (9:1 vol) over the column followed by 30 mL of methylene chloride. The solvents were removed by evaporation of the solvent with a nitrogen purge. The weights of each fraction were determined and the results reported as weight percentages.

RESULTS AND DISCUSSION

Definition of Products

Four classes of products were recovered from these experiments. The ROPE concept has been evaluated at the PDU and BSU levels and several reports have been prepared discussing the concept from the PDU-scale

reactor operation. The products from the PDU and BSU studies reflect the product slate that is expected from a commercial unit. The products from the simulation studies need to be defined to prevent confusion with the products that have been discussed for the PDU and BSU experiments. The following definitions are used for each of the product categories during these studies.

Heavy Oil is the liquid product that remains in the reaction vessel at the end of an experiment regardless of experimental temperature.

Distillate is the liquid product that is collected as a vapor at the experimental temperature and condensed to the liquid phase.

Spent Sand is the sand remaining in the reactor that is free of toluene-soluble organic material. The spent sand is reclaimed from the experiment by rinsing the sand and heavy oil sample with toluene to remove the heavy oil.

Char is the organic residue on the spent sand that is not toluene soluble but can be removed by combustion at 454°C (850°F).

Bitumen Extraction

Two randomly selected samples of the raw tar sand were analyzed to determine the composition and oil saturation of the bitumen and to determine the variability of the method used to sample the raw tar sand. Each sample of tar sand was serially extracted with toluene and pyridine to recover the bitumen. The toluene extract, which represents the largest quantity of organic material, was analyzed to determine the elemental composition.

The results of the analyses of the two tar sand samples are listed in Table 1. The total bitumen content (toluene-plus-pyridine extracts) of the two samples was 13.3 wt % of the tar sand. The toluene extract represented 13.1 and 13.2 wt % of the tar sand, and the pyridine extract represented 0.2 and 0.1 wt %. The recoveries of the organic materials from the raw tar sand are comparable, and the sampling procedure appears to provide uniform samples based on these results.

Evaluation of the elemental composition of the toluene extracts shows that there are no significant differences in the elemental compositions. Therefore, the samples and the sampling procedure are adequate for this project.

Experiments Investigating Recycling SAE 50 Weight Oil

The objective of the experiments discussed in this section was to evaluate the recycling of SAE 50 weight oil to a composition that would be equivalent to steady state in the PDU. Steady state, as it applies to the ROPE process, is defined as the condition where the composition of the reactants entering the reaction system and the composition of the products leaving the reaction system do not change as a function of time.

Table 1. Properties of Asphalt Ridge Tar Sand from Duplicate Analyses

Parameter	Composition	
	First Extraction	Second Extraction
Bitumen Content, wt %	13.3	13.3
Toluene Extract, wt %	13.1	13.2
Elemental Composition, wt %		
C	85.1	85.3
H	10.8	10.8
N	0.9	0.9
S	0.6	0.7
O (by difference)	2.6	2.3
H/C atomic ratio	1.52	1.52
Pyridine Extract, wt %	0.2	0.1

The reactants entering the recycle oil pyrolysis zone of the ROPE process are the raw tar sand and the heavy recycle oil. We can assume that the composition of the tar sand is relatively constant as shown from the analysis of duplicate samples discussed in a preceding section. The heavy recycle oil is the reactant that we expect to change in chemical composition as a function of time, particularly when SAE 50 weight oil is used as the initial heavy oil. The SAE 50 weight oil is a substitute for the recycle oil and will undoubtedly undergo pyrolytic reactions in the ROPE process. The composition of the heavy oil must reach a constant composition before steady-state operation can be achieved. Therefore, compositional changes in the recycle heavy oil were monitored during these experiments to determine when steady state was reached.

Produced gas, distillate, heavy oil, and spent sand are the products that will leave the reaction system. Previous research shows that there is little change in the elemental composition of the spent sand as a function of temperature or residence time (Guffey and Hunter 1989). Experiments conducted in the PDU demonstrated that the gas composition, determined by gas chromatography, remains relatively constant for the duration of the tests (Cha et al. 1986, 1988). Therefore, the composition of these products can be considered constant with respect to time during the approach to steady state. This leaves the distillate and heavy recycle oil as the products that can undergo significant change as the process approaches steady-state operation. The compositional changes of these products were monitored during these experiments to evaluate the approach to a steady-state equivalent.

Simulation of the PDU as it approaches steady state is not an easy task to conduct in the laboratory simulation reactor. The laboratory simulation reactor is a batch reactor used to simulate a dynamic process. In addition, the question of steady-state operation of the PDU

has not been resolved. The problem with using a batch reactor to simulate a dynamic process was approached by assuming that if we began the experiments at a given temperature with SAE 50 weight oil and continued recycling the heavy oil from one experiment to another (at constant temperature), then a dynamic process could be approximated with a series of batch-reactor processes.

Operation of the PDU at steady state has not been well defined in previous research. Thus, this research addressed defining the approach to steady state in the PDU using the laboratory simulation reactor. Several chemical and physical parameters were selected that we believed had the potential to monitor the approach to a condition in the laboratory simulation reactor that is equivalent to steady-state operation in the PDU. We made the assumption that when a steady-state equivalent is reached, the trend in the chemical indicators should remain at a constant value (within experimental error). The selected parameters were monitored in the heavy oils and distillates produced during this series of experiments. The following sections discuss the results obtained from the experiments conducted at 375, 400, and 425°C ((707, 752, and 797°F).

Material Balance Closures

Material balances were determined for each of the experiments performed during this phase of the study. The material balances are useful in accounting for the materials consumed or produced during an experiment, and they also provide a quantitative measure of the quality of each experiment by measuring the gain or loss of material. The material balances for each of the experiments are listed in Tables 2 through 4. The material balances are arranged in these three tables according to the experimental temperature used in each series of experiments.

The material balances for the experiments investigating the recycling of SAE 50 weight oil at 375°C (707°F) have closures between 92.7 and 101.1% (Table 2). The experiments were halted after the ninth iteration because the results (discussed in detail below) showed that a condition equivalent to steady state could not be reached in a reasonable number of cycles of the heavy oil. All of the closures except experiment 8 (92.7%) are within the experimental error of the laboratory simulation reactor. The low recovery for experiment 8 can not be explained. It was not possible to duplicate this experiment, because the experiments were conducted by using the heavy oil recovered from the previous experiment as the initial heavy oil for the next experiment.

The material balances for the experiments conducted at 400°C (752°F) are listed in Table 3. A total of fourteen experiments were conducted at this temperature. The experiments were halted after the fourteenth experiment because the results (discussed in detail below) showed that a condition equivalent to steady state had been reached. The experiments conducted at this temperature have material balance closures between 93.2 and 100.7%. Experiment 8 had the only material balance (93.2%) below the level considered to be within the experimental error of the

Table 2. Mass Balances for the Heavy Oil Recycle Experiments Conducted at 375°C

Experiment Number:	1	2	3	4	5	6	7	8	9
Reactants, g									
Tar Sand	98.9	99.7	103.6	100.2	100.8	100.1	100.1	100.9	90.0
Heavy Oil	100.0	100.2	100.2	100.1	100.2	100.1	100.0	100.0	90.0
Total	198.9	199.9	203.8	200.3	201.0	200.2	200.1	200.9	180.0
Products, g									
Distillate	0.0	0.4	0.7	1.1	3.6	2.6	0.7	3.2	0.1
Heavy Oil	113.3	113.5	110.3	108.3	109.1	107.7	112.6	94.7	94.5
Gas	0.0	0.0	0.0	0.1	0.0	0.0	0.0	0.0	0.0
Coke	0.7	0.5	0.7	0.6	1.0	0.4	0.3	0.8	0.5
Sand	84.4	87.7	90.5	86.9	86.8	86.5	86.8	87.6	77.6
Total	198.3	202.1	202.2	197.0	200.5	197.2	200.4	186.3	172.7
Closure, %	99.7	101.1	99.2	98.4	99.8	98.5	100.1	92.7	95.9

Table 3. Mass Balances for the Heavy Oil Recycle Experiments Conducted at 400°C

Experiment Number:	1	2	3	4	5	6	7	8	9	10	11	12	13	14
Reactants, g														
Tar Sand	100.6	100.4	110.7	100.0	99.9	100.0	95.0	95.1	79.7	76.4	75.1	70.2	52.9	50.7
Heavy Oil	100.0	100.0	100.0	100.0	100.0	100.0	95.0	95.0	79.6	76.4	75.1	70.1	52.7	50.4
Total	200.6	200.4	210.7	200.0	199.9	200.0	190.0	190.1	159.3	152.8	150.2	140.3	105.6	101.1
Products, g														
Distillate	1.1	4.7	6.9	8.8	0.6	10.8	6.0	4.5	8.4	3.3	4.6	15.2	0.4	9.5
Heavy Oil	111.0	106.0	105.7	102.1	112.6	101.2	100.1	88.8	80.4	82.0	78.2	61.7	56.5	43.6
Gas	0.9	0.6	0.6	0.7	0.3	0.7	0.6	0.8	1.0	0.5	0.5	0.9	0.4	0.8
Coke	0.5	0.5	0.6	0.5	0.6	0.5	0.3	0.5	0.4	0.4	0.5	0.4	0.3	2.3
Sand	87.1	88.6	96.7	87.2	85.7	87.1	83.3	82.6	70.2	66.6	66.2	62.1	46.5	44.9
Total	200.6	200.4	210.5	199.3	199.8	200.3	190.3	177.2	160.4	152.8	150.0	140.3	104.1	101.1
Closure, %	100.0	100.0	99.9	99.7	99.9	100.2	100.2	93.2	100.7	100.0	99.9	100.0	98.6	100.0

Table 4. Mass Balances for the Heavy Oil Recycle Experiments Conducted at 425°C

Experiment Number:	1	2	3	4	5	6	7	8
Reactants, g								
Tar Sand	99.9	82.4	97.4	84.0	67.7	55.2	50.4	39.2
Heavy Oil	100.1	81.3	65.3	55.2	45.0	37.5	33.0	22.8
Total	200.0	163.7	162.7	139.2	112.7	92.7	83.4	62.0
Products, g								
Distillate	21.7	21.0	15.5	8.7	8.9	2.5	7.9	0.8
Heavy Oil	86.3	70.2	59.5	55.3	42.6	39.8	29.4	25.9
Gas	1.5	1.2	1.1	0.9	0.5	0.5	0.7	0.3
Coke	0.6	0.6	0.5	0.5	0.4	0.3	0.4	0.2
Sand	87.6	70.0	85.0	73.6	60.1	49.9	45.5	34.7
Total	197.7	163.0	161.6	139.0	112.5	93.0	83.9	61.8
Closure, %	98.9	99.6	99.3	99.8	99.8	100.3	100.6	99.6

laboratory simulation reactor. Examination of the material balance data from this experiment shows that the cause of the low material balance closure is from the heavy oil recovered from the experiment. The weight of the heavy oil was checked when this error was identified, and it was found to be the correct weight. We have interpreted this to mean that the error was in the weight determination of the heavy oil charged to the reactor. This error should not have a large affect on the results of this study because this only changes the heavy oil-to-bitumen ratio from 8:1, used in the remainder of the experiments, to 6.3:1. An error of this type will add a higher percentage of bitumen to the organic material charged to the experiment and cause a slight increase in the rate of progress to a condition that is equivalent to steady state.

The material balances for the experiments conducted at 425°C (797°F) are listed in Table 4. A total of eight experiments were conducted at this temperature. The experiments were halted after the eighth experiment because the results (to be discussed in detail below) showed that this temperature did not produce sufficient heavy oil to sustain the process. The mass of tar sand charged to the reactor was increased during these experiments in an attempt to increase the production of heavy oil so that a sufficient number of experiments could be performed to establish a steady-state equivalent at this temperature. This attempt was not successful as is shown by the results in Table 4. All of the material balance closures for the experiments conducted at this temperature are between 98.9% and 100.5%. These material balance closures are within the experimental error expected from experiments conducted in the laboratory simulation reactor.

Organic Product Distribution

Steady state is defined as the reactants and products from a process exhibiting constant composition with time. Relatively constant mass production of the products is also important for the ROPE process because the heavy oil is recycled through the system. Failure of the reactor to produce a constant mass of heavy recycle oil that is equal to or in excess of the initial inventory will not allow the process to continue to a steady state. The recoveries of heavy oil for the experiments conducted at each of the three temperatures are listed in Table 5. The recoveries are based on the initial charge of heavy oil for each experiment and are reported as weight percentages.

Examination of the results from the experiments conducted at 375 and 400°C (707 and 752°F) shows that the heavy oil recovered from the majority of the experiments was greater than 100%. The exceptions include experiment 8 at each of these temperatures and experiments 12 and 14 at 400°C (752°F). Experiment 8 at each of these temperatures did not have acceptable material balance closures and the heavy oil recoveries did not represent a trend in the data. Experiments 12 and 14 at 400°C (752°F) had severe bumping problems that caused heavy oil to be carried over to the distillate receivers, thus, reducing the recovery of heavy oil. Examination of these results, with consideration of the above discussed exceptions, shows that it is possible to produce sufficient heavy oil to sustain the recycle needs of the process.

Table 5. Weight Percentage of Heavy Oil Recovered From Each Experiment

Number of Heavy Oil Cycles	Heavy Oil Recovered		
	375°C	400°C	425°C
1	113.3	111.0	86.2
2	113.3	106.0	86.3
3	130.0	105.7	91.0
4	108.1	102.1	100.2
5	108.8	112.6	94.7
6	107.6	101.2	106.1
7	112.7	105.4	89.1
8	94.7	93.5	113.6
9	105.0	101.0	
10		107.3	
11		104.1	
12		88.6	
13		109.2	
14		89.1	

Therefore, it should be possible to achieve an equivalent to steady-state operation at 375 and 400°C (707 and 752°F). Further analysis of the data from these experiments is necessary to determine if a condition equivalent to steady state can be achieved.

Examination of the results from the experiments conducted at 425°C (797°F) shows that the recoveries of heavy oil from most of the experiments are less than 100%. The three experiments having heavy recycle oil recoveries greater than 100% are exceptions from the normal trend. The process will not be able to sustain itself in a recycle mode of operation at this temperature because the heavy recycle oil recoveries are less than 100%. Operation at steady state has little meaning for developing the process if the process can not sustain itself with heavy recycle oil, and further evaluation of the experiments in terms of achieving a condition equivalent to steady state are meaningless. For this reason, the experiments at 425°C (797°F) were discontinued after eight experiments, and we assumed that a condition equivalent to steady state could not be achieved.

The distribution of the organic products for the experiments conducted at 375, 400, and 425°C (707, 752, and 797°F) are listed in Tables 6, 7, and 8, respectively. The organic products are defined as distillate, heavy oil, coke, and produced gas. The results reported in these tables are listed based on the organic mass charged to the reactor. The results from the experiments conducted at 375°C (707°F) show that little distillate and no gas were produced at this temperature. We interpreted this as an indication that the reaction rate of the pyrolytic reactions at this temperature is significantly lower than the reaction rate at the two higher temperatures. The reaction rate is too low to produce a heavy recycle oil that approaches steady-state conditions in a reasonable amount of time (10 cycles of the heavy oil). For this reason, the experiments were terminated after 9 cycles of the heavy oil.

Table 6. Organic Product Distribution for the Heavy Oil Recycle Experiments at 375°C, wt %

Number of Heavy Oil Cycles	Distillate	Heavy Oil	Coke	Gas
1	0.0	99.9	0.6	0.0
2	0.3	99.9	0.4	0.0
3	0.6	99.5	0.5	0.0
4	1.0	95.3	0.5	0.0
5	3.1	95.9	0.7	0.0
6	2.3	94.8	0.3	0.0
7	0.6	99.2	0.3	0.0
8	2.9	87.6	0.5	0.0
9	0.1	92.5	0.5	0.0

Table 7. Organic Product Distribution for the Heavy Oil Recycle Experiments at 400°C, wt %

Number of Heavy Oil Cycles	Distillate	Heavy Oil	Coke	Gas
1	1.0	97.6	0.4	0.8
2	4.1	93.3	0.4	0.6
3	5.6	85.1	0.5	0.5
4	7.8	90.0	0.4	0.6
5	0.5	99.2	0.5	0.3
6	9.5	89.1	0.4	0.6
7	5.6	92.8	0.3	0.5
8	4.2	82.3	0.4	0.7
9	9.3	89.0	0.5	1.2
10	3.8	94.6	0.5	0.6
11	5.4	91.8	0.5	0.5
12	3.3[a]	94.2[a]	0.5	1.2
13	0.7	94.5	0.6	0.7
14	0.4[a]	93.1[a]	2.9	1.4

[a] Experiment bumped and heavy oil was carried over with the distillate. Values corrected for heavy oil carry over are reported.

Table 8. Organic Product Distribution for the Heavy Oil Recycle Experiments at 425°C, wt %

Number of Heavy Oil Cycles	Distillate	Heavy Oil	Coke	Gas
1	19.4	76.0	0.5	0.8
2	22.7	76.0	0.6	0.7
3	19.8	75.8	0.7	0.7
4	13.0	83.1	0.8	0.6
5	16.4	78.7	0.7	0.4
6	5.6	88.5	0.7	0.5
7	19.7	73.7	1.1	0.9
8	2.9	92.0	0.6	0.4

The experiments conducted at 425°C (797°F) produced the highest quantity of distillate, but the amounts of coke and gas production are comparable to the amounts produced at 400°C (752°F). This suggests that operation of the process at 425°C (797°F) is most beneficial because this temperature produces the highest percentage yield of the desired product (distillate). The significance of the high distillate yield is offset by the fact that when the system is operated at this temperature it can not sustain itself by producing enough heavy oil for recycle. Further examination of the results in Tables 5 through 8 shows that 400°C (752°F) is the optimum temperature. Operation of the system at 400°C (725°F) produces the highest yield of distillate and provides a high enough recovery of heavy oil to sustain the recycle needs of the process.

Examination of the distillate yields from the series of experiments conducted at the three different temperatures shows an important point. The distillate production exhibits a crude cyclic pattern with respect to the number of cycles of the heavy oil (time in the PDU or BSU reactors). The cyclic nature of the distillate production may be an artifact of the way in which these experiments were conducted in the batch mode or the cycling of the distillate production may be real and have implications for a continuous process. If the cyclic distillate production is not an artifact, then it may be indicative of an induction period in the reaction system where a precursor has to be formed to a threshold level before the reaction will proceed to form the distillate. The reaction to produce the distillate drops the concentration of the precursor to a level below the threshold, and the reaction slows until that threshold is reached again. This is an area that should be further investigated for the development of this process. If the mechanism for the formation of the precursor can be identified, it may be possible to control its formation in a different portion of the reactor. This can stabilize the production rate and improve the distillate yield.

Chromatographic Separation of the Heavy Oils

The produced heavy oils were separated chromatographically (SARA separation) into four fractions (saturates, aromatics, resins, and asphaltenes) on active alumina. These analyses were performed to monitor the compound-class distributions of the heavy oils as a function of the number of times the heavy oil was cycled through the laboratory simulation reactor. The objective of these analyses was to determine if the approach to a steady-state equivalent change the distribution of the compound classes present in heavy oil and if these data could be used to define and measure the steady-state equivalent.

The asphaltene concentrations (based on the total organic charge to the reactor) in the heavy oils produced from these experiments are listed in Table 9. There is a definite trend in the results for the experiments at the three temperatures. The asphaltene concentration increases as a function of the number of times the heavy oil was cycled. The asphaltene concentrations at 375°C (707°F) are low compared with the concentrations at the other two temperatures. These are additional data that support the belief that the reaction rate at this temperature is too low to reach a steady-state equivalent in a reasonable amount of time. An equivalent to steady state was not achieved during these experiments based on the concentration and trends in the concentration of the asphaltenes.

The asphaltene concentrations in the heavy oils produced at 400°C (752°F) show a significant increase as a function of the number of times the heavy oil is recycled. Careful evaluation of the concentration changes shows that it becomes relatively constant after ten cycles of the heavy oil. After the tenth cycle, the heavy oil concentration varies randomly from approximately 12 to 18%. The values are not absolutely constant at an equivalent of steady state, but the data show a cycle similar to that observed for the distillate production.

The asphaltene concentrations in the heavy oils produced at 425°C (797°F) also show an increase as a function of the number of times the heavy oil is recycled. Evaluation of these results shows that the asphaltene concentration reaches a relatively constant value and begins to cycle after six uses of the heavy oil. We interpreted this as an equivalent of steady state. The experiments could not produce sufficient heavy oil to sustain the recycle for the process; therefore, these results have little significance to evaluation of steady-state operation of the PDU.

The distributions of compound classes (saturate, aromatic, and resin fractions) in the heavy oils produced from the experiments performed at 375, 400, and 425°C (707, 752, and 797°F) are listed in Tables 10, 11, and 12, respectively. The chromatographic separation used to generate these fractions was performed on the maltene fraction (heavy oil after the asphaltenes were precipitated), and the results are reported as the weight percentage of each fraction based on the mass of the maltenes. The solvent was removed from the individual fraction with a nitrogen gas stream, which causes some loss of material by entrainment, and the

material balances are normally less than 100 wt %. Examination of these results shows that the saturate fractions are the chromatographic fractions with the highest concentration in the experiments at all temperatures. In general, the aromatic fractions are present at higher concentrations than the resin fractions. Unfortunately, there are no detectable trends in the distribution of these classes of compounds as a function of the number of times the heavy oil is recycled.

Table 9. Asphaltene Concentration of the Recovered Heavy Oils from the Heavy Oil Recycle Experiments, wt %

Number of Heavy Oil Cycles	375°C	400°C	425°C
1	0.0	0.9	0.1
2	0.0	0.5	0.3
3	0.1	1.1	1.2
4	0.1	4.7	6.4
5	0.1	4.1	6.9
6	0.1	4.7	15.6
7	0.2	8.1	12.0
8	0.2	10.9	16.6
9	0.3	11.4	
10		12.0	
11		12.4	
12		14.0[b]	
13		18.1	
14		13.5[b]	

[a] Concentration based on total organic material charged to reactor.
[b] Corrected for heavy oil carryover into distillate fraction.

Table 10. Compound Class Distribution for the Heavy Oils at 375°C, wt %

Number of Heavy Oil Cycles	Saturates	Aromatics	Resins
1	59.0	25.6	15.4
2	61.1	24.7	15.1
3	58.5	25.8	12.6
4	61.7	26.1	12.2
5	53.7	25.1	18.3
6	49.0	19.2	15.4
7	52.7	26.6	17.0
8	51.0	21.5	15.0
9	56.4	30.7	15.4

Table 11. Compound Class Distribution for the Heavy Oils at 400°C, wt %

Number of Heavy Oil Cycles	Saturates	Aromatics	Resins
1	67.4	27.1	3.9
2	49.6	38.4	10.1
3	47.0	19.1	26.7
4	42.6	28.7	14.5
5	51.0	26.3	20.0
6	50.6	19.5	27.0
7	59.8	25.2	16.1
8	50.2	26.5	22.2
9	57.0	21.7	21.3
10	53.5	24.6	22.0
11	48.9	48.9	2.6
12	35.1	20.3	44.7
13	45.6	30.2	24.6
14	44.0	31.1	24.5

Table 12. Compound Class Distribution for the Heavy Oils at 425°C, wt %

Number of Heavy Oil Cycles	Saturates	Aromatics	Resins
1	48.3	15.5	34.7
2	51.0	28.5	20.6
3	42.6	47.2	10.2
4	58.3	32.7	9.4
5	48.1	30.1	21.9
6	43.0	27.9	27.9
7	42.3	27.7	30.0
8	52.2	31.0	18.6

Elemental Composition

The elemental composition of selected samples of the produced distillates and heavy oils were determined and used as an aid in evaluating an equivalent to steady state. The elemental composition of selected distillate samples from the experiments performed at 400 and 425°C (752 and 797°F) are listed in Tables 13 and 14, respectively. Elemental compositions were not determined for distillate samples from the experiments conducted at 375°C (707°F) because there was not sufficient distillate produced to provide samples for the analyses.

The elemental compositions of the distillate samples (Table 13) produced at 400°C (752°F) show that the nitrogen concentration remains at 0.0% (or below the detection limit) until the heavy oil has been recycled nine times. The nitrogen concentration then reaches a relatively constant value for the remainder of the samples. The sulfur concentration drops to 0.0% (or below the detection limit) after seven cycles of the heavy oil. These trends parallel the trends observed for the asphaltene concentration in that a constant value is reached for these parameters after several cycles of the heavy oil. The hydrogen-to-carbon (H/C) atomic ratios for the distillates show a trend of decreasing values through eleven cycles of the heavy oil. After eleven cycles, the value remains relatively constant. These trends are indicative of the compositional behavior expected at a steady-state equivalent.

The nitrogen concentration (Table 14) of the distillate samples produced at 425°C (797°F) show a trend similar to that observed for the distillates at 400°C (752°F). The concentration increases to a constant value (0.1%) after the fourth cycle of the heavy oil. The number of cycles required to reach the constant value is lower than was measured for the distillates produced at 400°C (752°F). This suggests that the reaction rate at this temperature is significantly higher than the rate at the other temperatures. Sulfur was not detected in these samples; we believe this shows that the system is extremely reactive at this temperature. The H/C atomic ratio is basically constant for all of the distillates analyzed at this temperature. The results from the elemental analyses of these samples show that an equivalent to steady state was probably achieved early in this series of experiments. However, this has little significance because reactions at this temperature can not produce sufficient heavy oil to meet the recycle needs of the process.

The elemental compositions of selected heavy oil samples produced at 375°C (707°F) are listed in Table 15. The nitrogen concentration shows a steady increase, and the H/C atomic ratio shows a constant decrease as a function of the number of times the heavy oil is recycled. These results suggest that an equivalent of steady state has not been achieved after nine cycles of the heavy oil. This is not surprising because the reaction rate at this temperature is too slow to reach a steady-state equivalent in a reasonable number of heavy oil recycles.

Table 13. Elemental Analyses of Selected Distillate Samples from the Heavy Oil Recycle Experiments at 400°C, wt %

Number of Heavy Oil Cycles	C	H	N	S	H/C Atomic Ratio
1	82.8	13.5	0.0	0.8	1.96
3	86.6	12.8	0.0	0.5	1.77
5	85.7	13.5	0.0	0.5	1.89
7	85.9	13.0	0.0	0.5	1.82
9	85.8	13.2	0.1	0.0	1.85
11	87.8	11.8	0.2	0.0	1.61
13	82.7	12.2	0.3	0.0	1.77
14	86.9	12.9	0.2	0.0	1.78

Table 14. Elemental Analyses of Selected Distillate Samples from the Heavy Oil Recycle Experiments at 425°C, wt %

Number of Heavy Oil Cycles	C	H	N	S	H/C Atomic Ratio
2	85.6	13.4	0.0	0.0	1.88
4	86.2	13.4	0.1	0.0	1.87
6	86.2	13.5	0.1	0.0	1.88
8	85.6	13.3	0.1	0.0	1.86

Table 15. Elemental Analyses of Selected Heavy Oil Samples from the Heavy Oil Recycle Experiments at 375°C, wt %

Number of Heavy Oil Cycles	C	H	N	S	H/C Atomic Ratio
1	86.5	13.2	0.2	0.5	1.83
3	86.0	12.7	0.4	0.5	1.77
7	86.1	12.1	0.6	0.5	1.69
9	86.4	11.7	0.8	0.5	1.63

The elemental composition of selected heavy oil samples produced at 400°C (752°F) are listed in Table 16. The nitrogen concentration of these samples show a decrease as a function of the number of cycles of the heavy oil until the eleventh cycle. After the eleventh cycle, the nitrogen concentration becomes relatively constant. This suggests that the system has achieved a condition equivalent to steady state. The H/C atomic ratio does not show the same trend. The H/C atomic ratio shows a constant decrease as a function of the number of cycles of the heavy oil and suggests that an equivalent to steady state has not been achieved. Although the H/C atomic ratio does not indicate a steady-state equivalent, the system may have still reached the desired condition. Previous research shows that the H/C ratio of the heavy oil is not extremely sensitive to changes in processing conditions (Guffey and Hunter 1989).

The elemental composition of selected heavy oil samples produced at 425°C (797°F) are listed in Table 17. Both the nitrogen concentration and the H/C atomic ratio show a trend of change to a point where we obtain relatively constant values. The constant values occur after four cycles of the heavy oil. The relatively constant nitrogen concentrations and H/C atomic ratios suggest that an equivalent of steady state has been achieved.

Model-Compound Analysis

Model compounds were used during this study to follow the fate of these compounds during the processing required to achieve a condition equivalent to steady state in the PDU. Phenanthrene and anthracene were selected as the model compounds to represent aromatic compounds, and n-octadecane was selected to represent saturated hydrocarbons in the heavy oil. These three compounds occur in the heavy oil produced in both the PDU and BSU. Therefore, monitoring these compounds is a probe into the molecular level of the process and can yield important information regarding an equivalent to steady state. The results from analyses of the saturate and aromatic fractions from the heavy oils produced at 400°C (752°F) are listed in Table 18. Only the results from the experiments at 400°C (752°F) are reported because the results from heavy oils produced at the other temperatures were not significant.

The area percentages of anthracene and phenanthrene show a steady decrease through eleven cycles of the heavy oil; then the area percentages become relatively constant. This suggests that the composition of the heavy oil changed through the eleventh cycle. After the eleventh cycle, the composition of heavy oil did not change. This suggests that an equivalent to steady state had been achieved. This is significant because this parameter measures the molecular composition of the heavy oil, and a constant composition at the molecular level is important for establishing steady-state operation.

The concentration of n-octadecane was used in two ways. First, it was monitored as the percentage of total ionization. Second, it was monitored as a ratio with n-nonadecane. The percentage of the total ionization shows a decrease through the eleventh cycle of the heavy oil as was observed for the aromatic hydrocarbon model compounds. This suggests that an equivalent to steady state has been achieved.

Table 16. Elemental Analyses of Selected Heavy Oil Samples from the Heavy Oil Recycle Experiments at 400°C, wt %

Number of Heavy Oil Cycles	C	H	N	S	H/C Atomic Ratio
1	85.0	12.9	0.2	0.5	1.82
3	86.1	12.5	0.4	0.5	1.74
5	86.8	12.3	0.5	0.5	1.70
7	86.8	11.9	0.7	0.5	1.65
9	86.5	11.5	0.9	0.5	1.60
11	87.3	11.4	1.0	0.5	1.57
13	87.5	10.8	1.3	0.5	1.48
14	86.8	10.4	1.2	0.5	1.44

Table 17. Elemental Analyses of Selected Heavy Oil Samples from the Heavy Oil Recycle Experiments at 425°C, wt %

Number of Heavy Oil Cycles	C	H	N	S	H/C Atomic Ratio
2	86.7	12.8	0.3	0.6	1.77
4	87.0	11.8	0.7	0.5	1.63
6	86.1	10.9	0.9	0.6	1.52
8	87.2	11.9	0.7	0.6	1.64

Table 18. Results of GC/MS Analysis of SARA Fractions from the Heavy Oils Produced at 400°C, area %

Number of Heavy Oil Cycles	Aromatic Fraction	Saturate Fraction	
	Model Compound[a]	Model Compound[b]	C_{19}/C_{18}
1	36.9	3.6	0.0
2	22.0	2.3	0.1
3	21.0	1.5	0.3
4	15.3	1.2	0.4
5	9.3	1.7	0.4
6	8.8	0.9	0.5
7	8.7	0.9	0.8
8	3.4	0.4	1.1
9	2.7	0.2	1.7
10	1.5	0.2	2.0
11	1.0	0.1	1.7
12	0.7	0.1	2.3
13	0.8	0.1	2.4
14	0.9	0.1	2.4

[a] Area of the response of anthracene plus phenanthrene divided by the total ionization multiplied by 100%.

[b] Area of the response of normal octadecane divided by the total ionization multiplied by 100%.

The ratio of n-nonadecane to n-octadecane (C_{19}/C_{18}) shows an increase through the tenth cycle of the heavy oil followed by a relatively constant value for the remainder of the samples. This is important. Both compounds are produced in the larger scale units, but additional n-octadecane was added to these experiments. When this ratio increases to a constant value, it shows that the n-octadecane is consumed by the system and n-nonadecane is supplied by the reactions until a steady-state composition is reached. This can be extended to other components in the SAE 50 weight oil. They will be consumed and formed by the process at approximately the same rate as the model compounds until a steady-state composition is obtained.

Theoretical Approach to Steady State

The experimental data suggests that an equivalent to steady state can be achieved in approximately 11 cycles of the laboratory simulation reactor. A series of calculations have been performed to provide a theoretical estimate of the number of cycles required for comparison with the experimental data. Several alternative cases were selected for these calculations. The cases include; (1) dilution of the initial heavy oil with bitumen without the production of distillate, coke, or gas, and (2) production of 5 weight percent distillate assuming that 0, 25, 50, 75, and 100 % of the distillate was derived from the bitumen. Replacement of 95 % of the initial heavy oil with a bitumen derived heavy oil was assumed to represent the steady-state equivalent. The results of these calculations are listed in Table 19.

The estimate for the case considering only dilution as the mechanism for removal of the initial heavy oil will require 24 cycles of laboratory simulation reactor. Dilution requires significantly more cycles to remove 95 weight percentage og the initial heavy oil than the experimental data shows is required to reach a steady-state equivalent. This comparison indicates that at 400°C (752°F) the steady-state equivalent is not the result of dilution.

The number of cycles varies drastically depending upon the percentage of distillate produced from bitumen. The number of cycles varies from 11 to 41. As more bitumen is used to produce the distillate the higher the anticipated number of cycles required to reach a steady-state equivalent. The experimental data has shown that an equivalent to steady state is reached in 11 cycles. This is the same number of cycles that are calculated to remove 95 percent of the initial heavy oil if all of the distillate is produced from the initial heavy oil. This agreement between the experimental data and the calculation is coincidental because the calculation is a simplified approach and does not consider the complexity of the process. The important information to be gained from the comparison is that the number of cycles required experimentally is in the same range as the calculation predicts for production of distillate from use of reasonable amounts of bitumen and heavy oil. This indicates that the steady-state equivalent observed in the laboratory simulation reactor is the result of the formation of distillate from both the bitumen and the heavy oil and not from dilution of the initial heavy oil by the bitumen.

Table 19. Calculated Number of Cycles to Reach Steady State

Dilution	Percentage Bitumen Derived Distillate					Experimental
	0%	25%	50%	75%	100%	
24	11	13	16	22	41	11

The Steady-State Condition

The objective of these experiments was to determine if an equivalent to steady state in the PDU could be achieved. The analytical results discussed here were directed toward monitoring the produced distillate and the heavy oil to determine if constant composition was attained. Constant composition of these products, as a function of the number of times the heavy oil was cycled, is defined as the criteria for an equivalent to steady-state operation.

The experiments conducted at 375°C (707°F) were terminated after nine cycles of the heavy oil. We terminated these experiments because the data showed that the reaction rate was extremely low and that extensive recycling of the heavy oil would be required. These results show that an equivalent to steady state was not reached at 375°C (707°F) after nine cycles of the heavy oil. We assume that it is possible to achieve steady-state operation at this temperature, but the time required is extensive.

The experiments conducted at 425°C (797°F) were terminated after eight cycles of the heavy oil. This series of experiments was terminated because the reactions at this temperature could not produce enough heavy oil to meet the recycle requirements of the process. The heavy oil-to-bitumen ratio was decreased to increase the organic mass charge to the reactor and attempt to increase the fraction of heavy oil produced. The production of heavy oil did not increase and supply the additional quantity of heavy oil required for recycle. These data show that an equivalent to steady state may have been achieved after approximately four cycles of the heavy oil.

The results at 425°C (797°F) are interesting. If the heavy oil inventory can not be maintained at a level to meet the recycle needs, the ROPE process can not operate whether or not it is at steady state. However, these results lead to another consideration. The higher distillate yield at 425°C (797°F) has significant economic impact for a process and a hybrid form of this process. If co-processing is applied in place of a recycle concept this technology can capitalize on the higher distillate yield and not rely on the required heavy oil inventory for recycle. The results show that the ROPE process can also be operated in a co-processing mode with increased distillate yields.

The experiments conducted at 400°C (752°F) were terminated after fourteen cycles of the heavy oil. The analyses of the heavy oils and distillates show that an equivalent to steady state was achieved. The number of cycles of the heavy oil required to reach an equivalent to steady state varies from seven cycles for the nitrogen concentration in the produced distillates to eleven cycles for several of the other parameters. Considering what each of the analytical parameters measures and how each of these relates to the definition of steady state, we suggest that the asphaltene concentration, the H/C atomic ratio, and the concentration of the model compounds best reflect the chemical composition of the heavy oil and produced distillate.

If we use the parameters that best reflect the chemical composition of the products, the number of cycles of the heavy oil required to reach an equivalent of steady state is 10 to 11. It is interesting that two of these parameters (H/C atomic ratio of the distillate and the C_{19}/C_{18} ratio in the heavy oil) show that an equivalent to steady state was reached in ten cycles. Two other parameters (area percentages of the total ionization of the aromatic and saturated model compounds) show that the required number of cycles is eleven. This is good agreement among the principal parameters and adds a level of confidence to our conclusion that a steady-state equivalent was reached in ten to eleven cycles of the heavy oil.

These results can be applied directly to steady-state operation in the PDU unit. Ten to eleven cycles of the heavy oil correlates to a approximately 8.5 hours of operation in the PDU. Previous research using the PDU-generated data shows that steady-state operation was achieved after eight hours (Cha et al. 1986, 1988). The results from the laboratory simulation study confirm this earlier prediction of the length of time required to reach steady state and add additional significance to the results collected using the PDU.

Potential Catalytic Effects of the Sand Matrix

Asphalt Ridge tar sand is composed of extractable bitumen representing approximately 13 wt % of the tar sand. The sand matrix is carried through the process and requires additional process heat to raise this mass to the temperature of each zone. This represents a large heat sink, and the economics of the process can be improved if all of the sand does not have to be transported through the process. The justification for transporting the sand matrix through the reactor has been based on the assumption that the sand matrix has potential catalytic activity in the pyrolysis reactions, and that it is required to improve the distillate yield. However, this assumption has not previously been investigated. This assumption was an area of research addressed as part of this task. The objective of this research was to determine if the sand matrix has catalytic activity that will increase the yield of liquid product.

Four experiments were performed to investigate the potential catalytic activity of the sand matrix. The experiments were conducted at 400°C (752°F) because the results from the previous experiments show that this is the optimum operating temperature for the ROPE process with

Asphalt Ridge tar sand. The material balance data for these experiments are listed in Table 20. The first two experiments listed in the table were performed using raw tar sand as the reactant feed. The third and fourth experiments were performed using a mass of extracted bitumen equal to the bitumen that would be present on the tar sand if equal weights of tar sand and heavy oil were used. These data show that the material balance closures range between 98.9 and 100.2 wt %. These closures are within the accepted error of the laboratory simulation reactor and are considered acceptable.

The yields of organic products are the parameters monitored during these experiments because they are the key parameters that will demonstrate catalytic effects of the sand. Table 21 lists the distribution of the organic products collected from these experiments. The results are listed as the weight percentage of each product based on the total mass of organic material charged to the reactor for that experiment.

Examination of the results shows that the distillate production has the same cyclic yield trend as was observed in the previous experiments, and the overall yield for each series of experiments appears to be equivalent. The coke production from the two experiments performed with raw tar sand are the sums of the coke adhering to the walls of the reactor plus the coke associated with the spent sand. These masses of coke are comparable with the coke production observed in other experiments using raw tar sand as the resources. The experiments using only bitumen did not produce measurable coke on the walls of the reactor, and this suggests that the coke is suspended in the heavy oil. The gas composition among the four experiments is relatively constant and ranges from 1.1 to 1.8% with an average of 1.4%.

The results listed in Table 21 can be presented in a format that is better for evaluation of the organic product yields. The yields of each organic product from each pair of experiments were summed, and the weight percentage of each product was determined based on the sum of the organic charge to each pair of experiments. This nearly approximates the expected yield from a continuous process and normalizes the cyclic nature of the distillate production. Table 22 lists the results of this analysis.

The distillate yield, which is the most important yield of the process, is comparable in both sets of data. The yield from the experiments conducted with only bitumen is slightly higher than the yield using raw tar sand. This difference is outside the experimental error of the laboratory simulation reactor and is significant; however, this small difference in the two yields may not be significant for a continuous process.

Table 20. Mass Balances for the Experiments Investigating the Potential Catalytic Effects of the Sand Matrix

	Tar Sand		Bitumen Only	
Experiment Number:	1	2	3	4
Reactants, g				
Tar Sand	64.9	49.2	0.0	0.0
Bitumen	0.0	0.0	8.0	7.2
Heavy Oil	64.6	49.1	64.1	57.5
Total	129.5	98.3	72.1	64.7
Products, g				
Distillate	13.6	4.8	7.9	13.7
Heavy Oil	56.3	47.1	62.9	49.3
Gas	1.3	0.6	1.0	0.9
Coke	0.9	0.7	0.0	0.0
Sand	57.7	44.5	0.0	0.0
Total	129.8	97.7	71.8	64.0
Closure, %	100.2	99.5	99.5	98.9

Table 21. Organic Product Distribution for the Experiments Investigating the Potential Catalytic Effects of the Sand Matrix, wt %

	Tar Sand		Bitumen Only	
Experiment Number:	1	2	3	4
Distillate	18.6	8.6	11.0	21.2
Heavy Oil	76.9	84.6	87.2	76.2
Gas	1.8	1.1	1.4	1.4
Coke	1.2	1.3	0.0	0.0

Table 22. Summary of Organic Products From Experiments using Raw Tar Sand or Extracted Bitumen, wt %

Resource Charge	Tar Sand	Bitumen Only	
		Uncorrected Result	Corrected for Dissolved Coke
Distillate	14.3	15.8	15.8
Heavy Oil	80.2	82.0	80.6
Gas	1.5	1.4	1.4
Coke	1.2	0.0	1.4

The gas production between the two sets of data is comparable and does not show that the sand may have a catalytic effect. This is similar to the results for coke production. The recovery of heavy oil is interesting. The recovery of heavy oil using only the bitumen is slightly higher than the recovery when raw tar sand was used as the resource. The difference in the heavy oil yield is equivalent to the coke production when raw tar sand was used as the resource. We investigated this further.

The heavy oil collected after experiment number four was filtered, and the residue was extracted with pyridine. The remaining solid was a carbon residue (coke). The weight of this material was 1.9 g and represents the coke production from both experiments. The weight percentage (based on the total organic charge) of this mass of coke is 1.4 wt %. This value compares favorably with the amount of coke produced when raw tar sand is processed. If this percentage of coke is subtracted from the percentage of heavy oil, the actual percentage of heavy oil is 80.6 wt %. This compares favorably with the amount of heavy oil for the series of experiments using raw tar sand.

The adjusted summary of the organic product distribution using the weight of coke determined in the heavy oil is listed in Table 22. Examination of these results show that there is no significant catalytic effect of the sand matrix. The sand matrix appears to be an inert material that is carried through the process. If the sand matrix is not effective as a catalyst in the ROPE process, it represents a large, inert heat sink that requires additional energy to heat the process charge to the operating temperature of each zone.

Process energy requirements and operability can be improved by process modifications using these and other data. The current configuration of the ROPE process is designed to disengage the liquid from the solid material in the drying portion of the reactor. Results show that the tar sand bitumen will go into solution in recycled distillate at 200°C (392°F) within five minutes (Guffey and Hunter 1989). These results, coupled with the lack of catalytic activity of the sand matrix, suggest that the solid and liquid can be disengaged between the preheating and the pyrolysis zones of the process.

This modification may provide several potential process improvements. First, it will remove the inert sand matrix from the processing stream before the higher temperatures are reached, thus, reducing the energy requirements. Second, the major operational problem associated with the ROPE process is plugging in the area between the pyrolysis and drying screws. This plugging occurs because coking is the predominate reaction at the higher temperatures used to disengage the solids from the liquids. The coke builds up in the reactor and causes agglomeration of the sand particles resulting in plugging of the screw mechanism. Performing the disengaging at a temperature less than the pyrolysis temperature will minimize coke buildup and prevent plugging (Guffey and Hunter 1989). This will improve the operability of the process.

Third, once the sand is removed at a lower temperature, the screw mechanics will not be required in the downstream portion of the reactor, and a simpler design can be sought. A possibility that can be considered is a type of delayed coking process in which the residual heavy oil is recycled to regain its heat. A process such as this may have lower capital costs because there are fewer moving parts. The current process design (screw movement of solids) can be replaced with pumps because only a liquid is transferred.

A process of this design will face one problem that has to be addressed. This problem is the formation of coke that will be suspended in the heavy recycle oil. At high enough concentrations, this coke will form a nearly solid mass that can not be pumped through the process. There are two possible approaches to address the problem of dissolved coke. The first approach is to consider a settling tank to allow the coke to be removed by gravity. A second approach is to allow a small amount of sand to pass into the higher temperature regions of the reactor to act as a nucleus for coke deposition.

CONCLUSIONS

Two areas of the ROPE process have been addressed in this research using the laboratory simulation reactor: (1) the fate of SAE 50 weight oil as it is recycled to approach an equivalent to steady state in the PDU and (2) the potential catalytic effect of the sand matrix. The following conclusions can be drawn from the reported data.

1. An equivalent to steady state in the PDU can not be achieved at 375°C (707°F) in a reasonable length of time with Asphalt Ridge tar sand because the reaction rate is too slow to make the necessary modifications to the heavy oil and bitumen to achieve steady-state conditions.

2. The ROPE process can not operate for extended periods of time at 425°C (797°F) with Asphalt Ridge tar sand because the quantity of heavy oil recovered from the process is not sufficient to meet the heavy oil inventory requirements for recycle.

3. Using Asphalt Ridge tar sand, an equivalent to steady state in the PDU can be achieved in the laboratory simulation reactor after ten or eleven cycles of the heavy oil. This is equivalent to about 8.5 to hours of operation in the PDU. This estimate is in agreement with the estimate determined from previous experiments conducted in the PDU.

4. The ROPE process can not operate at 425°C (797°F) because the heavy oil inventory can not be maintained. However, the results from this study show that the process can be used for heavy oil co-processing, removing the need for a recycle stream, and can generate high yields of distillate.

5. The sand matrix associated with Asphalt Ridge tar sand does not have significant catalytic activity for the production of a distillable liquid product. This means that if the solids can be disengaged from the liquid at a lower temperature, the process can attain lower energy requirements, lower capital costs, and better operability.

ACKNOWLEDGEMENT

The authors express appreciation to the United States Department of Energy for funding this work under Cooperative Agreement Number DE-FC21-86MC11076.

DISCLAIMER

Mention of specific brand names or models is for information only and does not imply endorsement.

REFERENCES

Cha, C.Y., F.D. Guffey, and K.P. Thomas, 1986, Preliminary Results of Tar Sand Pyrolysis With Produced oil Recycle, Laramie, WY, DOE Report DOE/FE/60177-2370.

Cha, C.Y., L.J. Fahy, and F.D. Guffey, 1988, Recycle Oil Pyrolysis and Extraction Process. Third Annual Oil Shale Shale, Tar Sand, and Mild Gasification Contractors Review Meeting Proceedings, Morgantown, WV, DOE/METC-88-6098.

Cha, C.Y., L.A. Johnson Jr., and F.D. Guffey, 1990, Investigation of the ROPE Process Performance on Sunnyside Tar Sand, Laramie, WY, DOE Report DOE/MC/11076-2912 (DE91002004).

Guffey, F.D., and D.E. Hunter, 1989, Laboratory Simulation Studies of the Recycle Oil Pyrolysis and Extraction Concept, Laramie, WY, DOE Report DOE/MC/110760-2870 (DE90009677).

DATE
FILMED
4/02/92