PNL-8799 Pt 2

RECEIVED
OCT 20 1993
O.S.T.I

Student Manual
Book 2

Orientation to Occupational Safety Compliance in DOE

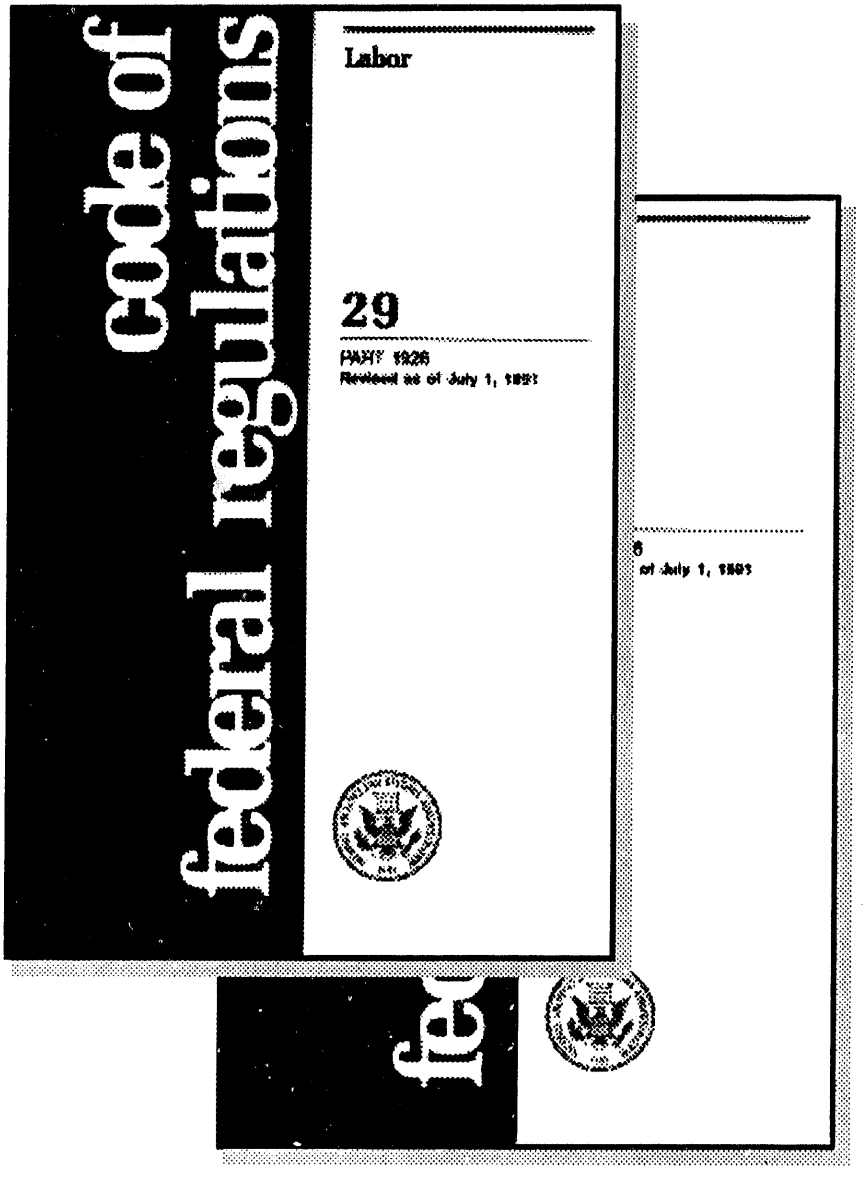

Safety & Health Training
Pacific Northwest Laboratory*
P.O. Box 999, K8-38
Richland, WA 99352
(509) 372-4195
*operated for the U.S. Department of Energy by Battelle Memorial Institute.

DISTRIBUTION OF THIS DOCUMENT IS UNLIMITED

TABLE OF CONTENTS
P-101
Orientation to Occupational Safety Compliance in DOE
Book 2

Electrical 16

Materials Handling & Storage 17

Inspection Responsibilities & Procedures 18

General Environmental Controls 19

Confined Space Entry 20

Lockout/Tagout 21

Office Safety, Ergonomics & Human Factors 22

Medical & First Aid, Access to Records 23

Construction Safety 24

Injury/Illness Reporting System 25

Accident Investigation Procedures 26

DISCLAIMER

This report was prepared as an account of work sponsored by an agency of the United States Government. Neither the United States Government nor any agency thereof, nor any of their employees, makes any warranty, express or implied, or assumes any legal liability or responsibility for the accuracy, completeness, or usefulness of any information, apparatus, product, or process disclosed, or represents that its use would not infringe privately owned rights. Reference herein to any specific commercial product, process, or service by trade name, trademark, manufacturer, or otherwise does not necessarily constitute or imply its endorsement, recommendation, or favoring by the United States Government or any agency thereof. The views and opinions of authors expressed herein do not necessarily state or reflect those of the United States Government or any agency thereof.

MASTER

SUBPART S: ELECTRICAL

PURPOSE

The purpose of this lesson is to acquaint the participant with the basic concepts of electrical safety, and the application of 29 CFR 1910 (Subpart S).

OBJECTIVES

1. Describe the differing types of protection afforded by fuses, circuit breakers, and grounding devices.
2. Given a workplace situation involving the use of electrical equipment, identify applicable standards from 29 CFR 1910 Subpart S. Determine if the situation is in compliance, and describe appropriate corrective measures.
3. List four conditions which may enhance the potential for electrical shock.
4. List four of the most commonly violated electrical standards. Describe the hazard posed by each violation, and discuss how adherence to the standard would reduce that hazard.

REFERENCES

1. Control of Hazardous Energy Source (Lockout/Tagout); Final Rule. 55 FR 36644.
2. 29 CFR 1910 General Safety and Health Standards, Department of Labor.
3. Electrical Safety-Related Work Practices; Final Rule. 54 FR 31984.
4. Accident Prevention Manual for Industrial Operations: 9th ed. Vol I Engineering and Technology, National Safety Council
5.. Accident Prevention Manual for Industrial Operations: 9th ed. Vol II Administration and Programs, National Safety council.
6. 29 CFR 1926 Safety and Health Regulations for Construction, Department of Labor.
7. Supervisors' Safety Manual, 7th ed., National Safety Council
8. "American National Standard for Personnel Protection Lockout/Tagout of Energy Sources-Minimum Safety Requirements". American National Standards Institute (ANSI), 1430 Broadway, New York, NY 10018
9. "Electrical Safety Requirements for Employee Workplaces, (NFPA 70E)". National Fire Protection Association (NFPA), Batterymarch Park, Quincy, MA 02269

DURATION

One hour

INSTRUCTOR MATERIALS

Course manual with instructors notes.
Video: "Electrical Safety". Tele-Train Inc.
Overhead projector/viewer assembly
VCR/TV

1910 Subpart S
Electrical Safety

Objectives

1. Describe the differing types of protection afforded by fuses, circuit breakers, and grounding devices.
2. Given a workplace situation involving the use of electrical equipment, identify applicable standards from 29 CFR 1910 Subpart S. Determine if the situation is in compliance, and describe appropriate corrective measures.

Objectives

3. List four conditions which may enhance the potential for electrical shock.
4. List four of the most commonly violated electrical standards. Describe the hazard posed by each violation, and discuss how adherence to the standard would reduce that hazard.

1910.301—Introduction

- Four divisions of safety requirements:
  - design safety standards for electrical systems
  - safety related work practices
  - safety related maintenance
  - safety requirements for special equipment

4

Basic Rules of Electricity

- Electricity isn't "live" until current flows
- Electrical current won't flow until there is a complete loop
- Electric current always returns to its source
- When current flows, work (watt) is accomplished

5

Factors Which Enhance Electrical Shock Severity

- Wet/damp conditions
- Contact with ground or grounded objects
- Path of current through the body
- Area and pressure of body contact
- Duration of contact
- Age and conditioning of person
- Personal protective equipment
- Metal objects—watches, rings, necklaces

6

1910.303 General Requirements

- (c) Conductors shall be spliced with splicing devices of mechanically secured, soldered and covered
- (e) Electrical equipment shall be marked with manufacturer's name or trade mark
- (f) Disconnecting means shall be marked to indicate its purpose

Working Space About Electrical Equipment

- 1910.303(g)(1)(i) Table S-1 shall be used to determine working clearances around live parts 600 volts or less
- At least one entrance to electrical working space shall be maintained
- The working space in front of normally exposed live parts may not be less than 3 feet

1910.304 Wiring Design and Protection

- (304)(a)
  - Grounded conductors or conductors used for equipment grounding shall be identifiable and distinguishable from all other conductors

Outside Conductors < 600 Volts

- 1910.304(c)
  - Clearances for specific operations related to:
    - Conductors on power poles
    - Clearance from the earth
    - Clearance from door openings
    - Clearance over roofs
    - Location of outdoor lamps

Overcurrent Protection

- 1910.304(e)(1)(iii) All cartridge fuses which are accessible and all fuses and thermal cutouts on circuits over 150 volts shall be provided with disconnecting means
- 1910.304(e)(1)(vi) With circuit breaker handle in up position, the breaker is closed.

1910.304(f) Grounding

- 1910.304(f)(5)(v) Equipment to be grounded:
  - appliances and tools in wet locations
  - motorized hand tools
- 1910.304(f)(5)(vi) Non-electrical equipment to be grounded:
  - frames and tracks of electric cranes
  - metal enclosures around equipment of over 750 volts

1910.305 Wiring Methods, Components and Equipment for General Use

- (a)(1)(ii) No wiring shall be installed in ducts transporting dusts or flammable vapors
- (a)(2)(iii)(F) Bulbs shall be protected from breakage by 7 foot elevation from work surface or with a guard
- (a)(2)(iii)(G) Flexible cords shall be protected from damage

13

1910.306 Specific Purpose Equipment and Installations

(a) Electric signs

(b) Cranes and hoists

(c) Elevators, escalators, etc.

(d)–(f) Electric welders, data processing systems and x-ray equipment

(g)–(i) Induction and dielectric heating equipment, electrolytic cells and electrically driven irrigation machines

(j) Swimming pools and fountains

14

1910.307 Hazardous Locations

- Class I
- Class II
- Class III
  - Division 1
  - Division 2

15

Hazardous Locations

- 1910.307(b) All electrical installations in hazardous locations shall be intrinsically safe and approved

16

Safety Related Work Practices—1910.331-.335

- 1910.331 Covers work for:
  - (a) Qualified workers who had specific training
  - (b) Unqualified workers who have not had such training
- 1910.331
  - (c) Expressly excludes certain tasks covered by other standards and regulations

17

Safety Related Work Practices

- 1910.332 Training
  - (a) Provides requirements for employees who face risk not reduced to safe levels under 1910.303-.308
  - (b) Classroom or on-the-job
    - level of training determined by the risk to the individual in specific operations and/or tasks

18

Safety Related Work Practices

- 1910.333 Selection and Use of Work Practices
  - (a) "Safety-related work practices shall be employed to prevent electric shock or other injuries...when work is performed near or on equipment or circuits which are or may be energized."

19

Safety Related Work Practices

- 1910.333
  - Working on deenergized parts
    - lockout/tagout
  - Working on energized parts
    - confined spaces
  - Behaviors associated with getting conditions into one state or the other

20

Safety Related Work Practices

- 1910.334 Use of Equipment
  - Selection
  - Maintenance
  - Use/intent
- 1910.335 Safeguards for personnel
  - Definitive protective equipment
    - signs/signals
    - barricades
    - attendants

21

Common Violations of Subpart S

- 1910.303(g)(1) and (g)(2)
- 1910.303(b)(1)
- 1910.304(f)(4) and (f)(5)
- 1910.303(c)
- 1910.303(e)
- 1910.305(g)(1) and (g)(2)

SUBPART S

ELECTRICAL

1910.301 **INTRODUCTION**

1910.302 **ELECTRIC UTILIZATION SYSTEMS**

Scope and application.

1910.303 **GENERAL REQUIREMENTS**

(a) - All conductors and equipment must be approved.

(b) - Electrical equipment shall be free from recognized hazards that are likely to cause death or serious physical harm.

(c) - Conductors shall be spliced with splicing devices or soldered splices shall be mechanically secure, and then soldered and properly covered.

(d) - All arcing and sparking parts shall be enclosed or separated from combustible material.

(e) - Electrical equipment shall be properly and durably marked with manufacturer's name or trade mark.

(f) - Disconnecting means shall be legibly marked, or located so its purpose is evident.

(g)(1) - Sufficient working space required for 600 volts or less.

(g)(1)(i) - For working clearances use table S-1, also minimum 30 inches in front of electrical equipment. Concrete, brick, and tile walls are considered grounded.

(g)(1)(ii)	- Working space may not be used for storage and exposed line parts in passageway or open space shall be guarded.
(g)(1)(iii)	- At least one entrance to electrical working space shall be maintained.
(g)(1)(iv)	- Where live parts are normally exposed on front of switchboards, minimum workspace of 3 feet is required.
(g)(1)(v)	- Have enough illumination in work spaces.
(g)(1)(vi)	- Minimum headroom in work space is 6 foot 3 inches.
(g)(2)(i)(a) thru (d)	- Live parts of 50 volts or more shall be guarded.
(g)(2)(ii)	- Guards shall be strong enough to prevent damage to electrical equipment.
(g)(2)(iii)	- Entrances to rooms containing live parts shall be marked with warning signs.
(h)(1)	- Listed here are requirements for conductors and equipment over 600 volts.
(h)(2)	- Electrical equipment under lock and key is considered properly isolated; a wall screen, or fence less than 8 feet high is not isolated. Entrances to buildings containing exposed live parts over 600 volts shall be kept locked.
(h)(2)(ii)	- Requirements for installations accessible to unqualified persons.
(h)(3)(i), (ii), (iii)	- Working space, illumination, elevation of live parts requirements.

1910.304	WIRING DESIGN AND PROTECTION
(a)(1)	- A grounded conductor shall be identified and distinguishable from all other conductors.
(a)(2)	- No grounded conductor may be attached to any terminal to cause reverse polarity.
(a)(3)	- A grounding terminal may not be used for any other purpose.
(b)(1)	- The employer shall use either G.F.C.I. protection or an assured equipment grounding conductor program.
(b)(1)(i)	- G.F.C.I. requirements.
(b)(1)(ii)(a) thru (g)	- Assured equipment grounding requirements.
(c)(1) thru (5)	- Outside conductors clearances from ground, poles, buildings, roofs, and location of outdoor lamps.
(d)(1)(i)	- A disconnect for all conductors shall be located in service-entrance and plainly marked to indicate open or closed position.
(e)(1)([illegible] thru (vi)	- Over current protection requirements.
(e)(1)(v[illegible]	- With circuit breaker handle in up position, the breaker is closed.
(f)(1) thru (4)	- Systems and conductors to be grounded, grounding connections and grounding path.
(f)(5)(i)	- Supports and enclosures for conductors.
(f)(5)(iii)	- Electric ranges, ovens, cooking units, clothes dryers, metal outlets, and junction boxes shall be grounded.

WIRING DESIGN AND PROTECTION (CONTINUED)

(f)(5)(iv)	- Fixed equipment shall be grounded if: 8 foot vertical or 5 foot horizontal from grounded object, wet loacation, contact with metal, in hazardous location, metal raceway, over 150 volts to ground.
(f)(5)(v)(a) and (b)	- Equipment connected by cord and plug to be grounded if in hazardous location, or over 150 volts to ground.
(f)(5)(v)(c)(1) thru (8)	- Equipment to be grounded: Refrigerators, freezers, air conditioners, washers, driers, dishwashers, sump pumps, motorized hand tools, lawn equipment, wet scrubbers, appliances and tools in wet locations, portable lamps and others.
(f)(5)(vi)	- Non-electrical equipment to be grounded: frames and tracks of electric cranes; f[illegible]s of non-electrically driven [illegible]ators and others.
(f)(6)(i)	- Non-current-carrying metal parts of fixed equipment shall be run in same enclosure as circuit conductors.
(f)(6)(ii)	- Electric equipment is grounded if secured to metal structure, properly supported and grounded according to (f)(6)(i).
(f)(7)	- Grounding of systems over 1000 volts.
(f)(7)(ii)	- Grounding of systems supplying portable or mobile equipment.

1910.305	**WIRING METHODS, COMPONENTS, AND EQUIPMENT FOR GENERAL USE**
(a)	- Wiring methods.
(a)(1)(i)	- Metal enclosures shall be metallically and continuously joined together to all boxes and fittings to provide electrical continuity.
(a)(1)(ii)	- No wiring installed in ducts transporting dusts or flammable vapors.
(a)(2)	- Temporary wiring methods may be less than for permanent wiring - See Examples.
(a)(2)(iii)(b)	- Open conductors shall be fastened at ceiling height every 10 feet and no branch circuit conductors may be laid on the floor.
(a)(2)(iii)(d)	- No bare conductors or earth returns may be used in temporary circuits.
(a)(2)(iii)(f)	- Bulbs shall be protected from breakage by 7 foot elevation from work surface or with a guard.
(a)(2)(iii)(g)	- Cords protected from damage. No sharp corners. If cords pass through doorways, they shall be protected.
(a)(4)(i)	- Open wiring on insulators requirements.
(a)(4)(iv)	- Tubes or bushings shall be used when open conductors pass through walls, floors, cross members or partitions.
(a)(4)(v)	- Conductors within 7 feet of floor are considered exposed to physical standard.
(b)(1)	- Conductors entering boxes shall be protected from abrasion. Unused openings in boxes shall be closed.

WIRING METHODS, COMPONENTS, AND EQUIPMENT FOR GENERAL USE (CONTINUED)

(b)(2) - All boxes and fittings shall have approved covers. Holes in covers through which conductors pass shall be smooth and rounded.

(c)(1) - Single and double - throw knife switches must not close by gravity, or if inverted, must have a locking device.

(c)(2) - Faceplates for flush mounted snap switches in ungrounded metal boxes must be made of non-conducting material.

(d) - Switchborads mounted in approved enclosure and have dead front or if live front, accessible only to qualified persons.

(e)(1) - Cabinets, boxes and fittings in wet locations shall be weatherproof.

(f) - Conductors for general wiring shall be insulated unless otherwise permitted in this subpart.

(g)(1) - Flexible cords and cables shall be used only for pendants, fixture wiring, portable lamps, appliances, etc.

(g)(1)(iii) - Flexible cords and cables may not be used for: Substitute for fixed wiring, run through holes in walls, ceiling, floors, doorways, windows, or attached to building surfaces, or concealed behind walls, ceilings, or floors.

(g)(1)(iv) - Flexible cords used in show windows must be heavy duty type and so marked.

(g)(2)(i) - Flexible cord or cable used as a ground must be distinguishable from others and properly marked.

1910.305	WIRING METHODS, COMPONENTS, AND EQUIPMENT FOR GENERAL USE (CONTINUED)
(g)(2)(ii)	- Use flexible cords only without splice or tap. Hard service flexible cord No. 12 or larger may be spliced if insulation is retained.
(g)(2)(iii)	- Flexible cords shall have strain relief to prevent pull on joints or terminal screws.
(h)	- Portable cables over 600 volts.
(i)	- Fixture wire uses.
(j)(1)(i)	- Fixtures, lamps, rosettes and recepticals -no live parts exposed unless 8 feet or more above the floor.
(j)(1)(ii)	- Portable hand lamps must have a molded handle and a guard attached to the handle.
(j)(1)(iii)	- Screw - shell type lampholders shall be used as lampholders <u>only</u>, and if in wet locations, shall be weatherproof.
(j)(1)(iv)	- Fixtures installed in wet locations shall be weatherproof.
(j)(2)(i)	- Receptacles may accept plugs <u>only</u> of the same voltage potential, except a 20 amp T-slot may accept a 15 amp plug.
(j)(2)(ii)	- Receptacles in wet locations shall be weatherproof.
(j)(3)(i)	- Appliances, other than certain types, shall have no live parts exposed.
(j)(3)(ii) and (iii)	- Appliances must have disconnect means and be marked with voltage rating.
(j)(4)(1)	- If specified that a piece of equipment must be in sight from another piece of equipment, maximum distance is 50 feet.

1910.305

WIRING METHODS, COMPONENTS, AND EQUIPMENT FOR GENERAL USE (CONTINUED)

(j)(4)(ii)(a) - Disconnect switch in sight of the controller. A single switch may control a group of motors if switch located near motors.

(j)(4)(ii)(b) thru (f) - If disconnect switch is out of sight of controller, controller must be marked to give location of disconnect.

(j)(4)(iii) - Motor overload, short-circuit, and ground fault protection.

(j)(4)(iv) - Exposed live parts of motors with 50 volts or more between terminals shall be guarded.

(j)(5)(i) - Requirements for wet type and dry type transformers.

(j)(6)(i) - Capacitor requirements.

(j)(7) - Ventilation of battery storage areas.

1910.306

SPECIFIC PURPOSE EQUIPMENT AND INSTALLATIONS

(a)(1) and (2) - Requirements for electric signs: disconnecting means, locking means, doors and covers and tools required to open them.

(b) - Requirements for cranes and hoists: such as disconnecting means and limit switches.

(b)(3) - Working space requirements when working near live parts shall be 2 feet 6 inches.

(c)(1) - Disconnecting means for elevators, dumbwaiters, etc.

1910.306	**SPECIFIC PURPOSE EQUIPMENT AND INSTALLATIONS (CONTINUED)**
(c)(2)	- Warning sign requirements.
(d), (e), (f)	- Disconnecting means for electric welders, data processing systems, and X-ray equipment.
(g), (h), (i)	- Induction and dielectric heating equipment. Electrolytic cells and electrically driven irrigation machines.
(j)	- Swimming pools, fountains, and similar installations.
1910.307	**HAZARDOUS (CLASSIFIED) LOCATIONS**
	See 1910.399(a) for definitions of "Classes and Divisions".
(b)	- All electrical installations in hazardous locations shall be intrinsically safe and approved.
1910.308	**SPECIAL SYSTEMS**
1910.399	**DEFINITIONS APPLICABLE TO THIS PART**
	Definitions applicable to .302 through .330

OSHA ELECTRICAL HAZARD FACT SHEET

(Reprinted April, 1988)

OSHA records show that the electrical standards have been most frequently violated of all the standards, and that 16 specific requirements are always high on the list of these violations. Therefore, we have produced these Fact Sheets to highlight and to clarify those requirements.

Most of the electrical standards are contained in the Code of Federal Regulations (CFR), Subpart S (1910.301 to .309), effective April 16, 1981. This subpart extracted from the National Electrical Code (NEC) only those requirements which were considered to apply most directly to employee safety and least likely to change with each new edition of the NEC.

It is the intent of the new Subpart S to provide standards which are performance oriented, therefore they contain few direct references to the NEC. However, the NEC contains specific information as to how the required performance can be obtained. Therefore, in these Fact Sheets, we have provided 1987 NEC references which expand on the basic standards in the CFR.

Each of the Fact Sheets is complete in itself, so that it can be used individually for first-time checking, periodic follow up, and as a training aid.

William S. Watkins, P. E.
McArthur, Ohio

TABLE OF CONTENTS

Fact Sheet No.	Subject	NEC Reference
1	Guarding of Live Parts	110-17
2	Identification	110-22
3	Uses Permitted for Flexible Cord	400-7
4	Prohibited Uses of Flexible Cord	400-8
5	Pull at Joints and Terminals Must be Prevented	400-10
6-1	Effective Grounding, Part 1	250-51
6-2	Effective Grounding, Part 2	250-51
7	Grounding of Fixed Equipment, General	250-42
8	Grounding of Fixed Equipment, Specific	250-43
9	Grounding of Equipment Connected by Cord & Plug	250-45
10	Methods of Grounding, Cord & Plug Connected Equipment	250-59
11	Alternating-Current Circuits & Systems to be Grounded	250-5
12	Location of Overcurrent Devices	240-24
13	Splices in Flexible Cords	400-9
14	Electrical Connections	110-14
15	Marking Equipment	110-21
16	Working Clearances about Electrical Equipment	110-16

(This sequence was influenced by the desire to produce first the Fact Sheets which seemed to be most needed.)

CODE 110-17 GUARDING OF LIVE PARTS

VIOLATIONS:

FUSED SWITCH

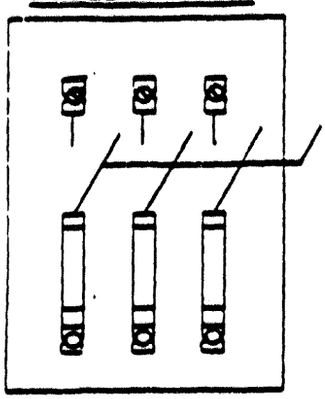

NO ENCLOSURE

PANELBOARD

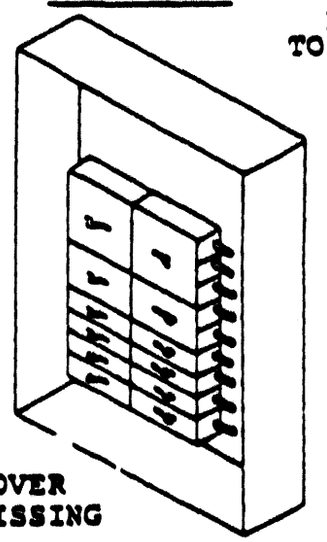

COVER MISSING

RECEPTACLE WITH WORK LAMP

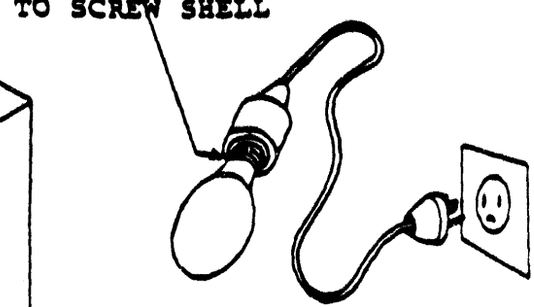

REVERSED POLARITY IN RECEPTICLE

Frequency of Violations:

Near the top of the list of standards most frequently violated is the requirement for guarding of live parts. Most of these violations are very simple and inexpensive to correct. Many of them are very obvious, and many exist simply because of poor maintenance. Another reason for these violations is that the voltage range covered is so common, particularly in small to medium-sized workplaces. (50-600 volts)

What Standards are Violated?

OSHA Standard 1910.303 (g) (2) is rather specific. NEC 110-17 is similar, and states that "except as elsewhere required or permitted by this Code, live parts of electrical equipment operating at 50 volts or more sha'l be guarded against accidental contact by approved enclosures, or by other means." Additional requirements in this Section of the NEC are summarized under "Some Do's & Don'ts", of this fact sheet.

General Conditions Under Which the Hazard Exists:

The Standard refers to electrical systems having voltages from 50 to 600 volts, and this is the voltage area in which most accidents occur. However, higher voltages are even more hazardous, and the guarding of these live parts is covered in Sec. 110-31 of the NEC. Voltages of less than 50 are not likely to be a shock hazard, but can cause sever burns and fires if high currents are involved.

Live parts have voltage between themselves and adjacent conducting parts or surfaces. Almost any electrical conductor becomes hazardous if the metallic surface is exposed. This condition might exist due to equipment installed without enclosures, to enclosures or covers being removed, or to insulation being damaged.

It should be noted that the purpose of this requirement is to protect <u>any person</u> who may be in the vincinity of electrical equipment against accidental contact. These people are presumably not electricians working on the equipment, and are not qualified or trained to be in close proximity to live parts.

If equipment is so arranged or located that it is accessible <u>only to qualified persons</u>, then the requirements of Sec. 110-16 of the NEC would apply.

<u>Description of Hazard</u>:

Whenever live parts are not completely enclosed, there is some danger that persons or objects may come in contact with such parts. Parts connected to any conductor or electrical circuits should be considered as "live". Current will flow between live parts, or from live parts to ground, over all possible paths. Persons who become part of such a path will be shocked. Metallic objects which become part of this path are likely to produce blinding sparks, to spatter molten metal, or to cause fires.

<u>Is This a Series Hazard?</u>

It is quite possible a serious hazard. Hundreds of people are electrocuted each year, and in many cases this condition is the cause. Even in cases where electrocution does not result, there frequently are indirect injuries. Examples of cases involving indirect injuries of electrical shock are:

- Falls from ladders
- Dropping of objects on the shocked worker or others
- Short circuit through metallic object causes arching, spatter of molten metal, fires, etc.

<u>Some "Do's & Don'ts"</u>:

1. Be sure that all live parts and conductors are in approved enclosures. Standard modern equipment generally takes care of this requirement, but continuous vigilance is necessary to make sure that covers, if removed, are replaced.

2. If it is not practicable to have live parts completely enclosed, then provide adequate protection against contact by other approved means.

3. Do use covers, screens or partitions which can only be removed by use of tools, so that unqualified persons are less likely to violate them.

4. Do recognize that, although equipment elevated at least 8 feet is considered to be guarded, this may not be adequate if material being handled is likely to make contact with live parts.

5. Be constantly aware of violations in your workplace. New work or changes may create a new hazard, or poor maintenance may allow reappearance of old ones.

A Checklist May be Helpful to You:

Yes	No	
___	___	Are those responsible for additions and changes aware of these requirements?
___	___	Are maintenance personnel instructed to close doors, replace covers and to continuously watch for missing covers?
___	___	Are all supervisors and employees aware that whenever they see exposed live parts, due to damage or any other cause, they should stay clear and report the situation?

Are any of the following situations to be found in your workplace?

___	___	Open wiring with parts of conductor or connections exposed?
___	___	Live-front switchgear accessible to unqualified persons?
___	___	Motor controls protected from contact only by inadequate barriers?
___	___	Motors having brushes, commutators or slip-rings with large unscreened end bells?
___	___	Portable tools in such condition that live parts are exposed?
___	___	Lampholders connected in such a way that the screw shell is supplied by the ungrounded (black) wire?
___	___	Unused conduit openings in boxes left without closures, so that pencils, coat-hangers, metal chips, etc., can enter?

CODE 110-22 IDENTIFICATION

ACCEPTABLE EXAMPLES:

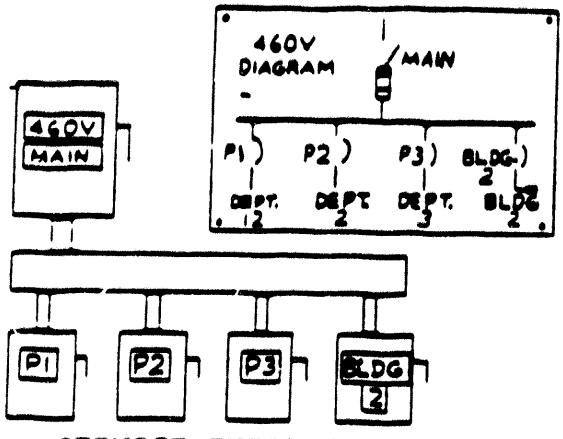

SERVICE ENTRANCE & FEEDERS

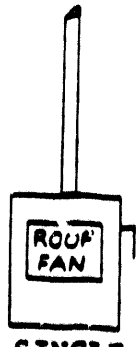

SINGLE DISCONNECT SWITCH

LEGEND IN DOOR POCKET

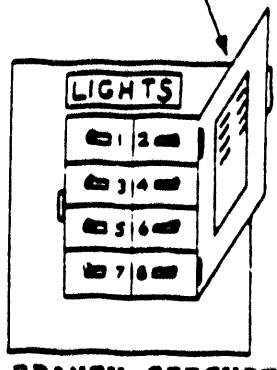

BRANCH CIRCUIT PANEL

Frequency of Violations:

High on the list of violations of OSHA standards is the lack of proper identification of electrical equipment. The standard requires identification so that the purpose of switches and circuit breakers is obvious. Note that the purpose of this requirement is to assist personnel in determining which device controls power to each particular circuit. Persons responsible for disconnecting a service, feeder, or branch circuit, are well aware of the need for such identification, but it is often neglected.

What Standards are Violated?

OSHA 1910.303 (f) states the specific requirements. NEC 110-22 is similar and requires that each disconnecting means (switch or circuit breaker generally) "shall be legibly marked to indicate its purpose, unless located and arranged so that the purpose is evident."

General Conditions Under Which the Hazard Exists:

1. The electrical system for any premises (work-place) originates at a service entrance, from which feeders carry current to branch circuits, which in turn carry current to the outlets (for lighting, appliances, equipment). It may be necessary at times to disconnect a branch circuit, a feeder or an entire service, for some reason. If the appropriate disconnecting means is not obvious in each case, mistakes may be made or vital time may be lost tracing circuits to their source.

2. If the circuit conductors, or the raceway containing them are visible from the disconnecting means to the equipment involved, the purpose may be evident. However, in most cases a sign, label, tag or nameplate on the disconnect will be necessary to meet this requirement.

Description of Hazard:

It must be expected that throughout the life of any electrical installation there will be occasions when portions of the system must be disconnected. Such occasions may be:

a) Normal (scheduled or unscheduled) maintenance procedures.

b) Changes or additions to the system.

c) Emergencies requiring quick action to disconnect power from a particular piece of equipment or portion of the system.

d) Major emergencies such as fire or explosion requiring that all power in the building be turned off quickly.

Is This a Serious Hazard?

The degree of hazard varies, because it depends on the plant procedures and the carefulness of the personnel. A careful electrician will make sure that the circuit to be worked on has been de-energized. And in emergencies he may open several switches, or the main switch, to make sure that current has been turned off to the area involved. He will also check for power on the circuit before assuming that it is safe. But such proceedures take time, and in panic situations they are sometimes by-passed. And opening more switches than necessary causes nuisance outages, so there is pressure to assume that the first one opened is the correct one.

In many work-places, there is one person who knows the electrical system "like the back of his hand," therefore there seems to be no need for identification. Unfortunately many casualties have been caused in situations where the key man was not present during the emergency.

Therefore, it must be stated that inadequate identification can and sometimes does lead to serious hazards. Harmful shocks and electrocutions occur because the wrong switch was opened or closed. Fires occur because a faulted circuit could not be disconnected quickly enough.

Some "Do's & Don'ts":

1. Do trace out all existing circuits, from service entrance to utilization equipment, and clearly mark each disconnecting device to indicate what circuit or what equipment it disconnects.

2. Do make sure that exceptions to the above are permitted only where the circuit conductors or their raceway are clearly visible from the disconnecting means to the load.

3. Do use permanently-legible labels or nameplates.

4. Do not depend entirely on anyone's memory to identify circuits for proper labeling at this time, or for operations in the future.

Some Do's & Don'ts: (cont'd)

5. Do make use of identifying numbers or letters on circuits and equipment rather than lengthy verbiage. But be sure that the system layout or key diagram is posted or otherwise readily available at appropriate locations.

A Checklist May be Helpful to You:

Yes	No	
___	___	Are your electrical people aware of these reguirements?
___	___	Has a survey been made recently to check proper identification?
___	___	Recognizing that there may be more than one main switch at the service entrance, is this situation clearly shown?
___	___	Would a fireman (not a plant electrician) be able to recognize the main switch or switches?
___	___	Does each feeder have an identification indicating its destination?
___	___	Is the purpose of each disconnecting means (throughout the premises) indicated by a key number or by description?
___	___	If key numbers or letters are used for identification, is there an electrical diagram appropriately displayed so that the key can be interpreted and the circuit located?
___	___	Does each panelboard have a "legend" indicating the purpose of each circuit breaker, fuse or switch in that panelboard? (Example: #3 - lights, east side) #4 - receptacles north wall)
___	___	Are all identifications clear, permanent and legible?
___	___	In any cases where the above methods are not used, is the purpose of the disconnect obvious from its location or arrangement?

CODE 400-7 USES PERMITTED FOR FLEXIBLE CORD

PERMISSIBLE USES:

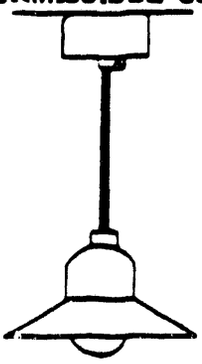

PENDANT, OR FIXTURE WIRING

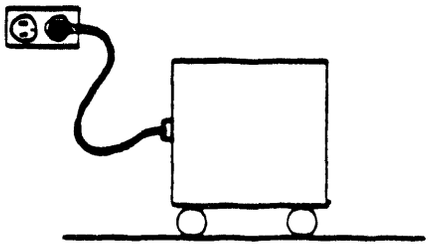

PORTABLE LAMPS, TOOLS OR APPLIANCES

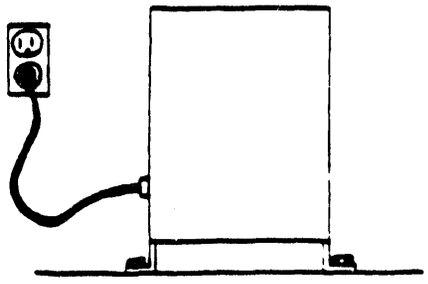

FIXED OR STATIONARY - TO FACILITATE MAINTENANCE & INTERCHANGE

Number of Violations:

The standard for safe use of flexible cords is one of those frequently violated, particularly in smaller plants. There is a definite need and place for cords, but there is also a temptation to mis-use them because they seem to offer a quick and easy way to carry electricity to where it is needed.

This fact sheet describes the uses which the standards permit, and another fact sheet in this series will point out the prohibited uses.

What Standards are Involved?

OSHA 1910.305 (g) (1) states the specific requirements. NEC 400-7 is similar, and lists eight specific situations in which flexible cord may be used. These are specified herein after under "Do's & Don'ts," and you will note that they all involve situations where flexibility is necessary. For additional help in recognizing violations please refer to the fact sheet on Section 400-8, "Prohibited Uses". Also note additional permitted uses as branches from busways in Section 364-8, in Section 305-4 for temporary wiring, and for fixtures in Section 410-30(c).

General Conditions Under Which the Hazard Exists:

The basic problem is that flexible cords in general are more vulnerable than the fixed wiring of the building. Therefore, cords should not be used if one of the recognized wiring methods could be used instead. The hazard to employees increases with each use of cord, so it should be used only for those purposes where experience has shown it is necessary and reasonably safe. Whenever cord is used beyond the eight uses specifically permitted, an additional and unnecessary hazard has probably been created.

Description of Hazard:

Standards require the fixed wiring of a premises to be installed in accordance with one of the wiring methods described in Chapter 3 of the Code. Whenever flexible cord is used, the protection of the recognized wiring methods is lost, and damage to the cord may result in employee hazards.

Terminations of the cord are likely to be troublesome, especially if not properly made. The fact that the cord is exposed, flexible, and in some cases not secured, makes such points more vulnerable. The conductors of flexible cords are finely-stranded for continuous flexing, but this stranding makes terminations a problem because of the possibility of strands escaping from under terminal screws.

Flexible cords are designed to resist abrasion and other abuses typical of the designated uses, but their characteristics may not be appropriate for other uses not contemplated by the manufacturer.

Whenever any of these conditions results in deterioration to the extent that the conductors are exposed, shock or burn may occur. Deteriorated insulation can permit overheating in the cord or devices, which sometimes causes fires.

Is This a Serious Hazard?

The misuse of flexible cords in most cases may not be a serious hazard, but may be in some cases. The situations are unpredictable, therefore, we ought not to permit an unnecessary increase in this possibility.

Some "Do's & Don'ts":

a. Use flexible cords only for the following situations:

1. pendants (a lampholder or cord-connector body suspended by a length of cord properly secured and terminated directly above the suspended device)

2. wiring of fixtures

3. connection of portable lamps or appliances

4. elevator cables

5. wiring of cranes or hoists (where flexibility is necessary)

6. connection of stationary equipment to facilitate their interchange, (equipment which is not normally moved from place to place, but might be on occasion.)

7. prevention of the transmission of noise or vibration. (In some cases vibration might fatigue fixed wiring and result in a situation more hazardous than flexible cord.)

8. facilitating the removal or disconnection of fixed or stationary appliances for maintenance or repairs. (For example, water coolers, exhaust fans.)

Some "Do's & Don'ts": (cont'd)

b. Do note that "where used as permitted in sub-sections (a) (3), (a) (6) and (a) (8) above, each flexible cord shall be equipped with an attachment plug and shall be energized from an approved receptacle outlet."

c. Don't use flexible cord for purposes other than those specified, except for possible rare situations not specifically described but within the intent of the Code. It is not the intent of OSHA to require fixed wiring where it would be more hazardous than flexible cord.

d. If you use flexible cord for temporary supply or for temporary wiring, don't forget to schedule it for removal or replacement within a reasonable time.

A Checklist May be Helpful to You:

Yes	No	
___	___	Are those responsible for additions and changes aware of these requirements?
___	___	Does your plant have access to qualified electrical personnel so that there is no tendency to try to "get by" with flexible cord where fixed wiring is more appropriate?
___	___	Are there any instances presently existing where cords are used for purposes other than those listed above?
___	___	Are inspections made periodically to detect improper use of cords which may occur from time to time?

CODE 400-8 PROHIBITED USES OF FLEXIBLE CORD

VIOLATIONS:

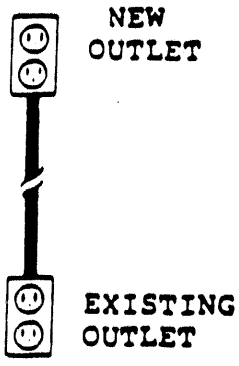

AS A SUBSTITUTE
FOR FIXED WIRING

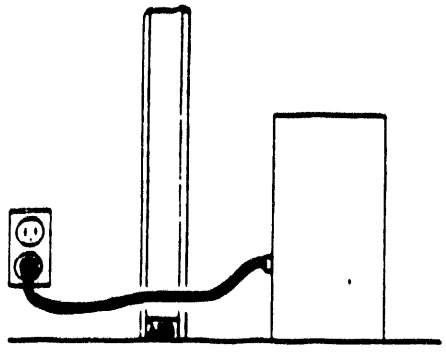

THRU WALLS, CEILINGS,
FLOORS, DOORS, OR WINDOWS

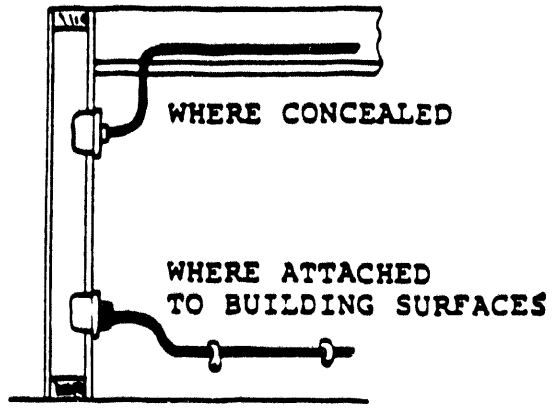

Frequency of Violations:

Of all of the violations of OSHA electrical standards, one of the most frequently found is misuse of flexible cords. One explanation of the high frequency of violations discovered is that misused cords are so obvious, and another reason is that there actually are large numbers of violations, and in many plants. This fact sheet points out the prohibited uses, and another fact sheet in this series describes the uses of cord which are permitted.

What Standards are Involved?

OSHA 1910.305 (g) (1) (iii) states the specific requirements. NEC 400-8 is similar and lists five situations in which flexible cord shall not be used. The first of these is most basic, and will answer almost all questions as to whether or not the use is a violation. It states that flexible cord "shall not be used as a substitute for the fixed wiring of a structure". More detailed prohibited uses are specified herein after under "Do's & Don'ts". For additional information see the fact sheet on Section 400-7, "Use of Flexible Cords". Also note that there is a special exception for Data Processing Systems in Section 645-2 of the Code.

General Conditions Under Which the Hazard Exists:

Section 400-7 of the Code lists eight specific uses for which flexible cord is permitted, such as for the connection of portable lamps or appliances. In these and similar uses the cord from outlet to appliance is permitted, to provide the flexibility and portability necessary to the function of the equipment. But flexible cord rarely is as well protected from abuse as the fixed wiring of a structure: therefore, the cord cannot be used where approved wiring methods described in Chapter 3 of the Code are more appropriate. There is usually not much question about use of the short length of cord which is furnished as part of an approved appliance or tool; there is usually no question about an extension cord used temporarily to permit use of the appliance or tool in its intended manner at some distance

from a fixed outlet; but there are questions when the usage is not obviously temporary, and when the cord is extended to some distant outlet in order to avoid providing a fixed outlet where needed. For example, a 50-foot extension cord used with an electric drill for maintenance purposes would usually not be a violation, but a 20-foot cord to an electric typewriter or a production machine usually would be a violation. The use of the extension cord in the latter case would increase the hazard unnecessarily, because the cord could be eliminated if a fixed outlet were installed close to the point of use.

Description of Hazard:

Flexible cord used in violation of this standard is likely to be damaged by activities in the area; by door or window edges; by staples or fastenings; by abrasion from adjacent materials; or simply by aging. If the conductors become partially exposed over a period of time, there will be danger of shocks, burns or fire.

Is This a Serious Hazard?

Because the violations of this standard are so numerous the number of accidents is large. Burns received directly from the conductors are likely to be painful but minor. Shocks and fires can be serious.

Some "Do's & Don'ts":

1. Do establish a policy of providing fixed wiring and receptacles throughout active areas so that electrical needs can be supplied without excessive use of cord.

2. When new electrical needs arise, allow time for proper installation of fixed wiring.

3. Do not use cord (1) as a substitute for the fixed wiring of a structure; (2) where run thru holes in walls, ceilings or floors; (3) where run thru doorways, windows or similar openings; (4) where attached to building surfaces; or (5) where concealed behind building walls, ceilings or floors.

4. Do not use extension cords for other than portable equipment and temporary situations.

5. Do install approved surface-wiring methods if necessary, rather than extension cords.

6. In cases where cord is used as permitted, but where additional safety can be provided by keeping the cord off the floor, use a suitable suspension arrangement which will not abuse the cord materials.

A Checklist May be Helpful:

Yes	No	
___	___	Are persons responsible for changes and additions aware of these requirements?
___	___	When changes or additions are planned, do you allow for the work necessary for a proper electrical installation?
___	___	Does the fixed wiring system of your premises have some provisions for extension of circuits for new outlets?
___	___	Are there any situations where "temporary" wiring has been allowed to remain for periods longer than can be justified?
___	___	Are there any places where cord is stapled, clamped or otherwise attached to building surfaces?
___	___	Are cords draped thru or over building steel?
___	___	Is any cord run through holes; or thru doorways, windows, etc.?
___	___	Are all cords visible for their entire length, so they can be observed for damage or deterioration?

CODE 400-10 PULL AT JOINTS & TERMINALS MUST BE PREVENTED

VIOLATIONS:

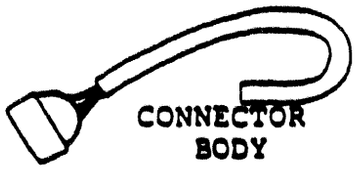

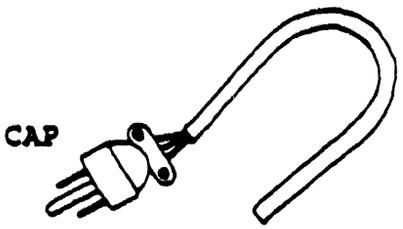

OBVIOUSLY THE CORD IS NOT GRIPPED

BENDING WIRE AROUND PRONGS IS NOT SUFFICIENT

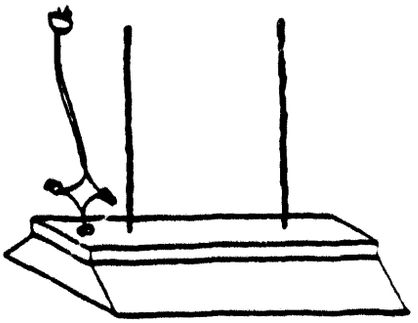

SPLICES MUST BE INSIDE OF ENCLOSURE, WITH CORD-GRIP CORD CONNECTC

Frequency of Violations:

On almost any premises one is likely to find at least a few violations of this requirement. The high frequency of violations is surprising in view of the fact that the hazard is so well-known and the remedies are so simple.

What Standards are Violated?

OSHA 1910.305 (g) (2) (iii) states the general requirements. More specific information as to recognized methods of compliance are provided in the NEC. Section 400-10 of the Code applies to all uses of flexible cords, and requires that "cords shall be so connected to devices and fittings that tension will not be transmitted to joints and terminals..."

General Conditions Under Which the Hazard Exists:

Flexible cord is used in numerous instances where flexibility is required, and is reasonably safe if the installation, use, and maintenance are done with care. One of the weak points of a cord assembly is the area in which connections are made, such as at attachment plug caps and connector bodies. Even when these terminations are carefully made they may in time become a hazard, but if such connections are made without skill and care they are especially troublesome.

Description of Hazard:

Terminations made by a manufacturer are generally quite rugged and dependable, usually molded into the cord assembly. But field terminations are subject to the following weaknesses.

1. Cord conductors not gripped by knot, clamp, fitting or wrapping with tape.

2. Inadequate knot fails to prevent tension on the connection.

3. Fitting or clamp incorrect size for the cord diameter, cannot tighten on cord jacket.

4. Flimsy devices of the push-in connection type are not adequate for most work-place uses. Other devices which might be appropriate for residential use may not be rugged enough for commercial or industrial conditions.

5. Conductors wrapped counter-clockwise around terminal screws cannot be properly tightened. Loose strands are likely to escape.

6. Even when connections are properly made, if devices are pulled apart by users pulling on the cord rather than on the device, trouble will probably develop over a period of time.

7. If cords are connected to fixtures or appliances without proper cord-grip fittings the connection could be subject to tension.

8. OSHA standards permit certain cords to be spliced, but only if the splice meets requirements such as preventing tension on the conductor joints.

9. Many lampholders applied as pendants do not have proper cord grip connectors.

10. If any electrical connection weakens, heat is likely to develop, causing further deterioration and possible fires.

11. If the equipment grounding conductor (the green wire) weakens, the protection for the equipment involved is lost, and the equipment housing may become energized.

12. If conductors are merely wrapped around the plug prongs, with no other restraint, continuous use may damage the conductors.

13. A loose connection, or strand of wire, may make contact where not intended.

Is This a Serious Hazard?

Flexible cords in general and cords on portable tools in particular are subject to abusive conditions, because the object of the cord is to provide flexibility. And for the same reason, such installations are likely to be handled, or occasionally touched, by employees. Therefore, the weaknesses listed above do occasionally lead to shocks and burns. Any shock can be a serious hazard, and burns are certainly objectionable.

Some "Do's & Don'ts":

1. Do use approved cords, plug caps, connector bodies and lampholders that are substantial enough for the conditions, and have provision

Some "Do's & Don'ts": (cont'd)

to take the strain off of connections and terminals.

2. Do not use residential-type devices in factory or other environments which are too rough for such designs.

3. Do use devices which grip the cord jacket, unless other means are provided suitable for the conditions.

4. Make all connections to cords inside of devices or enclosures.

5. If any splices are made in cords, be certain they are made so that a pull on the cord will not apply tension to the conductor joints.

6. Do be sure that persons who assemble or repair cords are trained in the required procedures, and that untrained persons do not tamper with cords and connections.

7. It is suggested that you use approved factory-assembled cord sets as much as possible, rather than making cord sets inplant. This preferred method is usually no more expensive, and is certainly less troublesome.

8. Continually urge employees not to pull on cords to remove plugs from receptacles.

A Checklist May be Helpful:

Yes	No	
___	___	Are your electrical people aware of these requirements?
___	___	Do you have a policy of purchasing only approved cords and devices which are suitable for the intended use?
___	___	Do you have an established procedure so that only qualified persons assemble or repair cord connections?
___	___	Have you made an inspection of your premises to detect any pre-existing violations which should be corrected?

CODE 250-51 EFFECTIVE GROUNDING Part 1 of 2 parts.

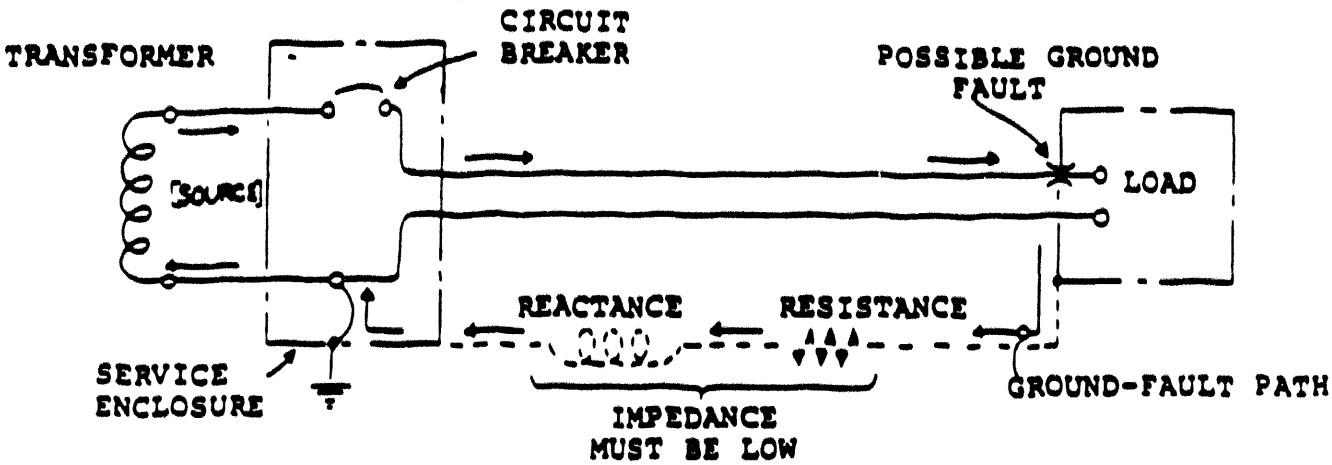

DIAGRAM SHOWING PATH OF GROUND-FAULT CURRENT.
(Note: the current must return to Source, not to Earth.)

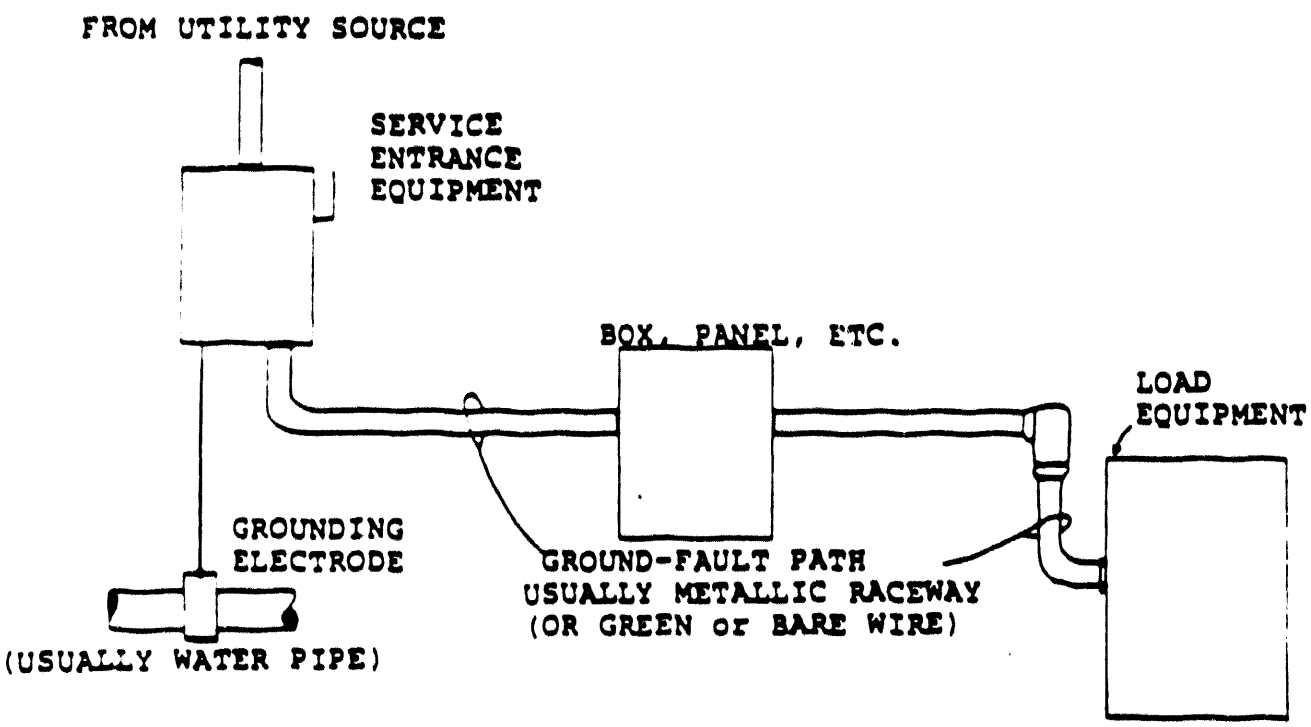

AN APPROVED METHOD OF PROVIDING LOW-IMPEDANCE GROUND-FAULT PATH

(CONDUIT CONTAINING CONDUCTORS CARRIES FAULT CURRENT BACK TO SOURCE.)

CODE 250-51 EFFECTIVE GROUNDING Part 1 of 2 Parts.

(Part 1 covers the fundamentals which determine whether protective grounding really protects. Part 2 provides some examples and some more specific aids.)

Number of Violations:

Near the top of the list of electrical violations is the requirement for effective grounding. Other fact sheets in this series point out what equipment should be grounded, and this fact sheet describes the means by which such grounding will accomplish its purpose. If effective grounding is not provided, electricity does strange things. This requirement is the most misunderstood subject in electrical safety.

What Standards are Violated?

OSHA 1910.304 (f) (4) states the general requirements. It was extracted from NEC 250-51, and is implemented by other CFR references such as 1910.303 (b), .304 (e) (1) (i), .304 (f) (6), .305 (a) (1) (i) and .305 (h). The NEC reference 250-51 is more complete, and is so fundamental that it is quoted here:

> "The path to ground from circuits, equipment, and conductor enclosures shall (1) be permanent and continuous, and (2) shall have ample carrying capacity to conduct safely any currents liable to be imposed on it, and (3) shall have impedance sufficiently low to limit the potential above ground and to facilitate the operation of the overcurrent devices in the circuit."

More specific NEC requirements are found in 250-33, 250-57, 250-62, 250-74, 250-75, 250-91 (b), and 300-10.

General Conditions Under Which the Hazard Exists:

Over the life of any installation faults may occur in the insulation which covers conductors. If such a failure allows the conductor itself to touch conductive materials, such materials become energized the same as the circuit conductor. We can reduce the danger of this faulty situation by "grounding". But those who think that this means connecting everything to earth are overlooking some electrical facts.

It is essential to realize that the term "grounding" really includes two separate but related precautionary functions.

1. The first function of grounding is to assure that all electrical enclosures are connected together. This equipment-grounding conductor must be continuous between all enclosures; and must be extended to the source of the electrical system, where it is grounded to earth (or something which serves in place of earth). This bonding of enclosures together prevents differences in potential (voltage) between enclosures; and connecting the enclosure system to earth (plumbing or building steel) prevents voltages between the electrical enclosures and their surroundings.

2. The second function of grounding is to make sure that when a fault to the enclosure occurs, the circuit will be de-energized. In order to assure this protection we must provide a "ground-fault path" which will carry enough current (amperes) to cause the fuse to melt or a circuit breaker to trip. The fault current flowing thru this path will be impeded by the impedance of the path, therefore the path must be provided in such a way that its impedance is very low. Referring to the diagram, note that ground-fault current can only flow from one terminal of the transformer (source), thru a current-carrying conductor, and back through the ground-fault path. This is referred to as the ground-fault "Loop".

If a given installation provides only the first of these two essential functions, it will limit the voltages between enclosures; however, the fault current flowing through the high-impedance ground-fault path will not rise high enough to cause the circuit to open, therefore, the situation can exist for unknown periods of time, permitting unpredictable heating, sparking and shock hazards.

Impedance includes both resistance and reactance, therefore, the hazard is more prevalent in a-c sytems than in d-c systems. The only low-reactance path for alternating-current faults is that path which closely follows the supply conductors. If the impedance of this loop were measured with a d-c ohmmeter it would indicate only the resistance, which is likely to be a small part of the total impedance.

Description of Hazard:

Whenever a current-carrying conductor makes contact with the conductor enclosures (raceways, cabinets, exposed metal parts of tools, etc.) the enclosure assumes the same voltage as the current-carrying conductors at that point. Voltage will cause a flow of current thru all available paths from an energized conductor back to the source, some paths being desirable and others undesirable.

One hazard created is that a person touching such exposed metal surfaces may provide a path through his body and eventually back to the source of voltage. This path may be through other surfaces in the vicinity, through building steel, or through earth. This is quite likely to result in harmful, and in many cases lethal, shock. But if a low-impedance ground-fault-loop is provided, the voltages on exposed surfaces will be minimized. Note that Sec. 250-51 uses the words "...to limit the potential above ground", but the obvious intent of this is to limit the voltage between electrical enclosures and any other (grounded) surfaces.

Another resulting hazard is that whenever such ground-fault current flows it is likely to produce heat and sparking at various points along the path. A loop which meets the requirements of 250-51 will prevent sparking, will produce minimum heat, and will pass enough current to open the overcurrent device in a fraction of a second.

It is important to note that the hazards described above are likely to exist in any installation where the equipment is not properly bonded together and

to ground. This is true whether or not the electrical supply system has an intentionally-grounded ("neutral") conductor.

Is This a Serious Hazard?

The specific hazards which exist when tools or other equipment are not protected by grounding are covered in other fact sheets. The hazards created when Sec. 250-51 is violated are possibly more serious because one might assume that protective grounding exists where in actuality it does not. A 3-wire receptacle and cord do not provide the required protection if the ground-fault path (or "loop") has an impedance so high that the fault is not immediately cleared. OSHA Compliance Officers consider the situation serious enough that they frequently test circuits with a "Ground-Loop Impedance Tester" which measures the a-c impedance a ground fault would encounter.

See Part 2 of this fact sheet for more specific information on application of this Standard.

CODE 250-51 EFFECTIVE GROUNDING Part 2 of 2 Parts.

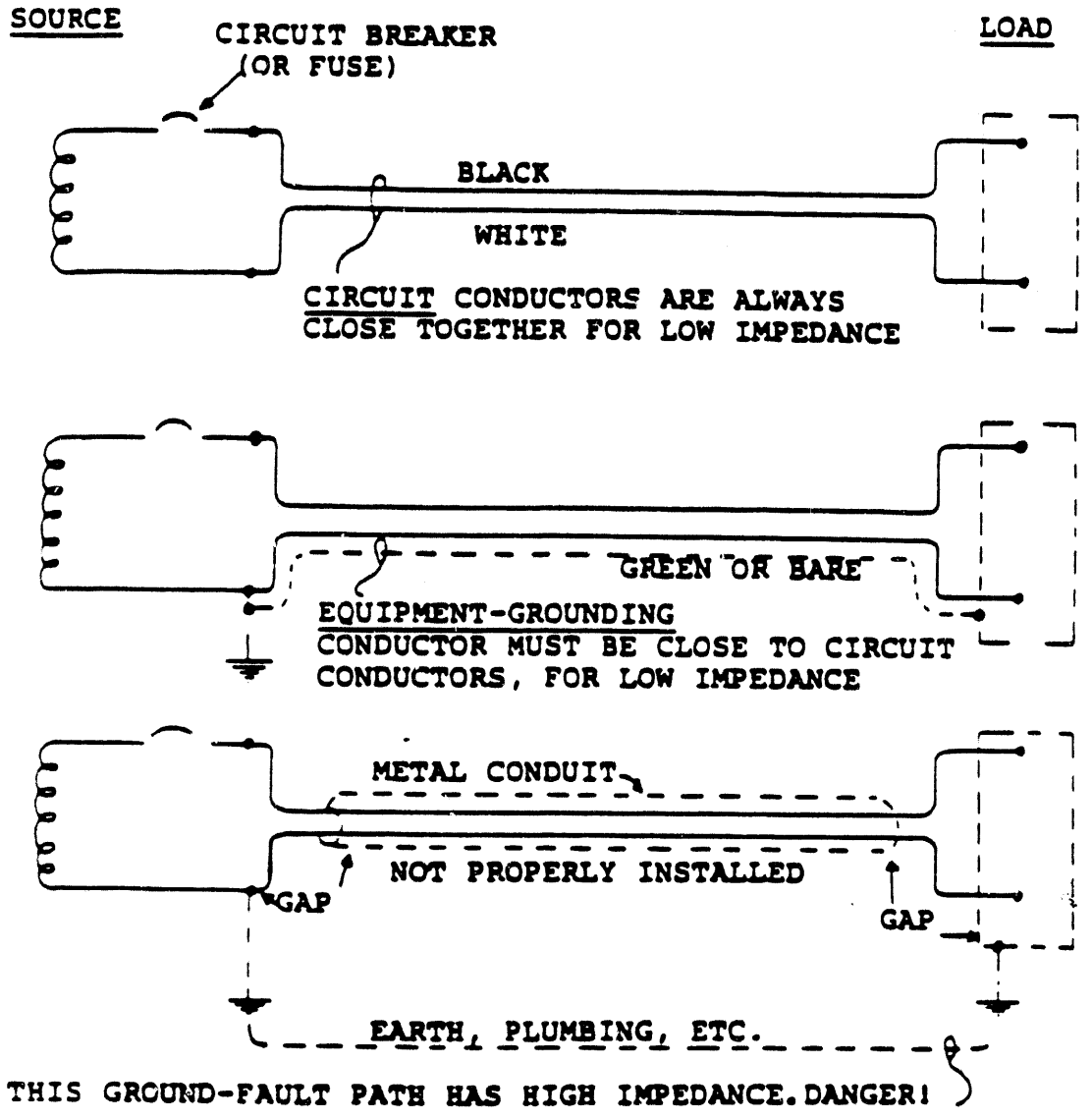

DIAGRAMS SHOWING WHY THE GROUNDING CONDUCTOR MUST BE RUN WITH THE CIRCUIT CONDUCTOR.

CODE 250-51 EFFECTIVE GROUNDING Part 2 of 2 Parts

(Part 1 precedes this, and explains the fundamentals of effective grounding. Part 2 uses those fundamentals in some specific conditions and examples.)

More About Which Standards are Violated:

Part 1 of this fact sheet refers to OSHA 1910.304 (f) (4) and NEC 250-51, which are performance requirements. Other OSHA references shown in Part 1 are similar to the following NEC requirements:

250-33 requires that metal enclosures (conduit, boxes, etc.) shall be grounded, and 300-10 requires that such enclosures shall be joined together into a continuous electrical conductor. 250-57 and -59 state that equipment may be grounded by one of several methods, but that the equipment grounding conductor (whatever method is used) must be run "with the circuit conductors". 250-62 states that, when an installation of equipment is supplied by separate connection to more than one circuit, a grounding conductor must be run with each set of circuit conductors. 250-91 (b) points out that a metallic raceway system enclosing the conductors is acceptable as the grounding conductor in most cases.

Specific Conditions Under Which the Hazard Exists:

Hazards are likely to exist whenever Sec. 250-51 is violated. It requires that the path to ground:

1. "shall be permanent and continuous". (If the path is installed in such a way that damage, corrosion, loosening, etc. may impair the continuity during the life of the installation, then shock and burn hazards will develop.)

2. "shall have ample carrying capacity to conduct safely any currents liable to be imposed on it." (Fault currents may be many times normal currents, and such high currents may melt or burn metal at points of poor conductivity. These high temperature may be a hazard in themselves, and they may also destroy the continuity of the ground-fault path.)

3. "shall have impedance sufficiently low to limit the potential above ground". (If the ground-fault path has a high impedance there will be hazardous voltages whenever fault currents attempt to flow.) "...and shall have impedance sufficiently low to facilitate the operation of the overcurrent devices in the circuit" (If the impedance is high, the fault current will be limited to some value so low that the fuse or circuit breaker will not operate promptly.)

One should note that Sec. 250-50, Exception, permits a grounded cold water pipe to serve as a grounding conductor for a receptacle only in existing installations where the branch circuit does not hve a grounding conductor. Even in this case the resulting ground-fault path must meet the requirements of 250-51.

Description of Hazard:

Some typical hazards which are created when this standard is violated are as follows:

1. A metallic raceway system (such as rigid conduit or electrical metallic tubing) is installed for part of the route of the supply conductors, but is not made continuous from source to load.

2. A metallic raceway system corrodes or loosens, to the extent that high resistance develops at one or more points.

3. A non-metallic wiring system (nonmetallic-sheathed cable or open wiring) is used, and no equipment-grounding conductor is run with the circuit conductors.

In any of these cases two types of hazard exist. There may be dangerous voltages between surfaces which are not properly bonded together and the fault current over a high-impedance path will probably cause sparking and burning. In many cases this has started fires.

So the hazards are shocks, burns, and explosions.

Some "Do's & Don'ts:

1. Do remember that the fault current in a-c circuits will be limited by the sum of resistance and reactance, and that the only low-reactance path is that which closely follows the circuit conductors.

2. If a metallic raceway system is used, do make sure that the metallic system is continuous and permanent.

3. In cases where a metallic raceway system is not used, do provide a green or bare equipment-grounding conductor close to the supply conductors to assure that all enclosures are bonded together and to the source.

4. Don't depend on structural metal, plumbing, or earth as an equipment grounding conductor unless you are sure it will pass fault current sufficient to open the overcurrent protective device immediately. The impedance of such paths is usually too high for alternating currents.

A Checklist May be Helpful:

Yes	No	
___	___	Do your electrical people understand these requirements?
___	___	Do you have a standard policy of running feeders and branch circuits in a metallic raceway, or of providing an internal equipment-grounding conductor where nonmetallic raceways are used?
___	___	Do you have any situations where you are depending on building structure or other ground-fault paths which might have a high impedance?
___	___	In questionable situations such as above, can you improve the safety by running a supplementary bonding conductor close to the circuit conductors?
___	___	In cases where you use a water pipe for grounding a pre-existing receptacle outlet (as permitted in Exception to 250-50), have you made certain that the water pipe does provide a low-impedace path back to the service entrance grounding connection?

CODE 250-42 GROUNDING OF FIXED EQUIPMENT, GENERAL

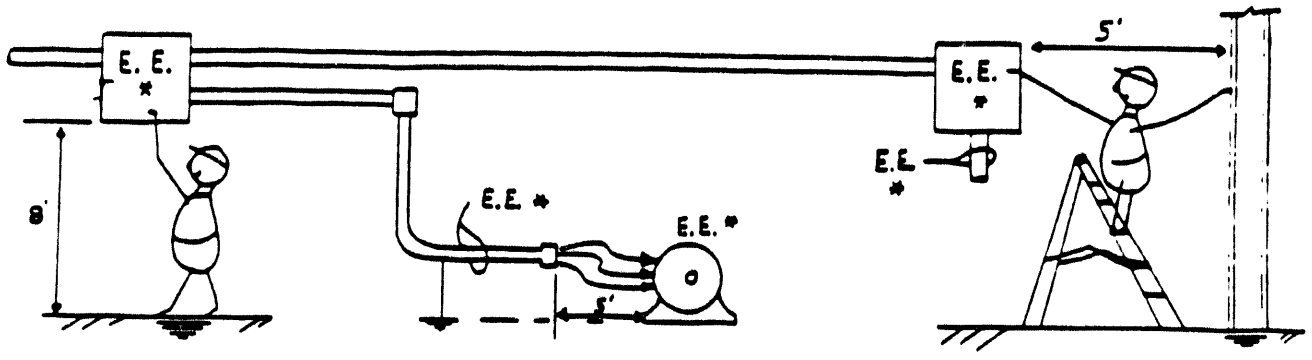

FIXED ELECTRICAL EQUIPMENT (E.E. ABOVE*) SHALL BE GROUNDED IF A PERSON CAN TOUCH THAT EQUIPMENT AND A GROUNDED SURFACE

Frequency of Violations:

Almost all electrical equipment which is fixed in place (fastened at a specific location) is required to be grounded. There are many violations of this requirement, violations which could be easily corrected.

What Standards are Violated?

OSHA 1910.304 (f) (5) (iv) states the general requirements. NEC 250-42 is similar, and requires that exposed noncurrent-carrying metal parts of fixed equipment likely to become energized under abnormal conditions shall be grounded under certain installation conditions. The conditions are specified in this fact sheet under "Do's & Don'ts", but paragraph (a) of 250-42 is the most basic, and will answer most questions of the grounding of fixed equipment. It states that such equipment shall be grounded "where within 8 feet vertically or 5 feet horizontally of ground or grounded metal objects and subject to contact by persons".

One should note that the word "equipment" (by definition) also includes materials such as conduit and other raceways. Therefore, Section 250-33 falls within the intent of 250-42 in requiring that metal enclosures for conductors (such as conduit) shall be grounded in most cases.

Also please note that Section 250-43, which is covered by another fact sheet in this series, lists a number of specific kinds of fixed equipment which are required to be grounded.

Whenever grounding is required, it must be effective grounding as required by Section 250-51 and as covered by another fact sheet in this series.

General Conditions Under Which the Hazard Exists:

It must be conceded that over the life of an installation ground faults will occur in equipment. This is usually due to abrasion, damage, aging or other abuses which break through the insulation of conductors and allow the metal of the conductor to touch the enclosures or adjacent metallic parts. Such an insulation breakdown might occur in the windings or other internal functioning parts of equipment, or in the wiring brought to or from the equipment. Whenever a current-carrying conductor makes contact in this way, the exposed metallic surfaces become energized at the same voltage as the conductor involved. The nature of voltage is that it will force current to flow from one terminal of the source, out thru the circuit conductor, and thru any available fault-current paths back to the other source terminal. The "source" is usually a transformer or service entrance. Fault current follows the raceway enclosing the conductors, from the fault location back to the service entrance (or sometimes to another ground fault).

If the metallic surfaces are not bonded together and to ground by a low-impedance equipment-grounding conductor (such as conduit), there will probably be dangerous voltage between electrical enclosures, and possibly from some enclosures to plumbing, building steel, or other grounded surfaces. Moreover, this dangerous condition will continue to exist for an unpredictable length of time, becasue the fuse or circuit breaker will not open the circuit unless a large amount of ground-fault current flows.

Whenever exposed noncurrent-carrying metal parts of electrical equipment are not grounded, and are within reach of a grounded surface, the hazard exists.

If the wiring to such equipment is carried in metallic raceways such as conduit, the raceways usually become the required equipment-grounding conductor. In other cases it is necessary to provide an additional conductor, along with the current-carrying conductors, to provide the required grounding path.

Description of Hazard:

If a person's body completes the ground-fault circuit from faulted equipment to some other surface a shock will result. Or if some conductive material should by chance complete the ground-fault circuit, dangerous heating and sparking may result. The voltage across any gap in the ground fault path may be almost as high as the line voltage, and the voltage from faulted enclosure to nearby plumbing or earth may approach line voltage if the ground-fault path is not a low-impedance path.

It should be obvious that several conditions influence the degree of hazard. Wet or damp locations, or metallic grounded surfaces in the vicinity, are more conductive than wood or plastic surfaces. Higher voltages may force lethal currents thru a path which would be less hazardous at lower voltages. And explosive or highly combustible materials are more easily ignited by sparks than are ordinary materials.

Is This a Serious Hazard?

The conditions described above can and often do produce lethal shock conditions. Even in cases where the shock does not kill a person, the indirect result of the shock (falling, etc.) may be death or serious injury.

Burns received from such situations may be serious, and in any case are painful. Arcs, sparks and high temperatures from conductive materials may cause minor or major fires. And explosions are almost always serious.

Some "Do's & Don'ts:

1. Do note that, in general, fixed electrical equipment must be grounded under any of the following conditions:

   a. Where within 8 feet vertically or 5 feet horizontally of ground or grounded metal objects and subject to contact by persons.

   b. Where located in a wet or damp location and not isolated.

   c. Where in electrical contact with metal.

   d. Where in hazardous location as covered by Articles 500 through 517.

   e. Where supplied by a metal-clad, metal-sheathed, metal-raceway wiring method.

   f. Where equipment operates with any terminal in excess of 150 volts to ground.

2. Do check the NEC for approved methods of grounding. Note that in many cases the metallic raceway enclosing the conductors may be providing the required ground-fault path back to the source.

A Checklist May Be Helpful to You:

Yes	No	
___	___	Are persons responsible for your electrical installations aware of these requirements?
___	___	Is fixed equipment, in general, supplied by fixed wiring methods?
___	___	Are there any locations where a metallic raceway, or other equipment-grounding conductor, is brought close to a machine or other equipment, but not bonded to such equipment?
___	___	Can you find any ungrounded fixed electrical equipment which a person can touch while touching other metallic surfaces or standing on earth or masonry floors?
___	___	Are there locations where equipment is assumed to be grounded simply because it is in contact with other metallic surfaces or with earth?
___	___	If there are cases as described in previous question, can you verify that such contact provides a low-impedance ground-fault path?
___	___	Are your employees taking special precautions in wet or damp locations to assure that the ground-fault path is permanent and continuous?

CODE 250-43 GROUNDING OF FIXED EQUIPMENT, SPECIFIC

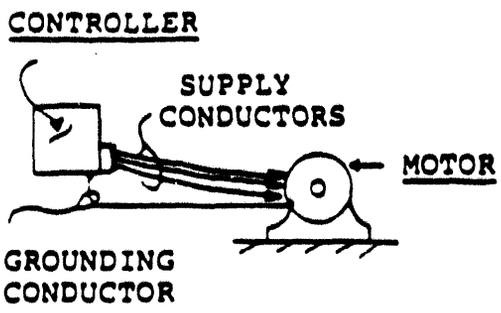

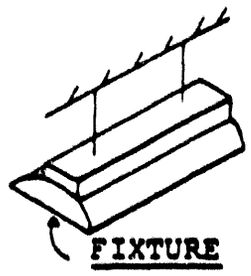

EQUIPMENT IN GARAGE, THEATER, ETC.

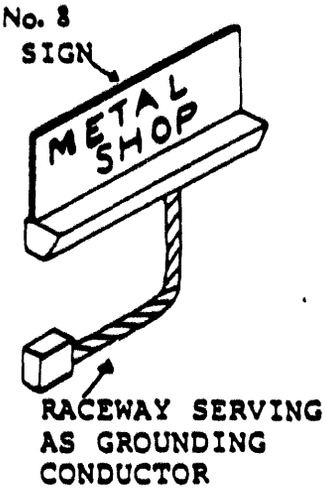

COMMON EXAMPLES OF SPECIFIC EQUIPMENT WHICH MUST BE GROUNDED

Frequency of violations:

Electrical equipment which is fixed in place is required (in general) to be grounded. And certain items of equipment are specifically named as requiring this protective feature. These requirements have been enforced by most local authorities for many years, but there are still many violations.

What Standards are Violated?

OSHA 1910.304 (f) (5) (iv) states the specific requirements, supplementing the general requirements covered in Fact Sheet No 7. The NEC reference covering specific equipment is 250-43, and it lists ten kinds of equipment which are required to be grounded regardless of voltage or other conditions.

There are two other fact sheets in this series which cover the more general and basic grounding requirements, and which preferably should be read prior to reading this sheet. Please refer to Code 250-51 on Effective Grounding and Code 250-42 on Fixed Equipment, General.

The specific kinds of equipment which Section 250-43 requires to be grounded are listed hereinafter under "Do's & Don'ts".

General Conditions Under Which the Hazard Exists:

The other fact sheets mentioned above will be helpful in understanding why most elecrical equipment is required to be grounded, and how effective grounding will minimize related electrical hazards. Those more general discussions explained that insulation breakdown in enclosed conductors can allow fault current to flow thru the faulted conductor, onto the metal enclosure, and thence thru any available paths back to the source of power. Section 250-42 describes general conditions under which fixed equipment should be grounded to reduce this hazard.

In becoming more specific, Sec. 250-43 lists certain kinds of equipment which must be grounded regardless of whether or not those general conditions exist. These specific requirements are based on the characteristics of the equipment, on the ways it is likely to be used, and on the accident experience records.

Description of Hazard:

Exposed noncurrent-carrying metal parts of fixed equipment may become energized at some time during the life of any installation. When such a fault occurs the exposed metal parts assume the same voltage as the faulted conductor; and even voltages of less than 120V can be lethal. These differences in potential may exist between the faulted enclosure and other electrical enclosures (such as boxes, conduit, etc.) or between such enclosures and other metallic surfaces in the vicinity. The voltages will be minimized, and the danger eliminated, if all such conductive surfaces are bonded together by an effective equipment grounding conductor. In such an installation all equipment-grounding conductors from the entire electrical system eventually join together at the source of the system, and at that point are grounded to the grounding electrode (usually the water piping).

Another hazard present if equipment is not grounded as required is the possibility of sparking and heating at points where a ground-fault path encounters partial contact or high resistance. This can cause burns, fires or explosions.

Is This a Serious Hazard?

The conditions described above and in the fact sheet on Sec. 250-42 can and often do produce lethal shock currents. Even in cases where the shock does not kill a person, the indirect result of the shock (falling, etc.) may be death or serious injury.

Burns received from such situations may be serious, and in any case are painful. Arcs, sparks and high temperatures from conductive materials may cause minor or major fires, or explosions.

Some "Do's & Don'ts:

1. Do notice that Sec. 250-42 requires electrical equipment to be grounded under certain general conditions.

2. Do notice that Sec. 250-51 and other Code sections require grounding to be done in such a way that it will provide effective protection.

3. Don't assume that electrical equipment is properly grounded unless you are certain that the equipment is bonded together and back to the source, either by conduit or a separate conductor.

4. Do note that Sec. 250-43 states that the exposed noncurrent-carrying metal parts of the following kind of equipment, regardless of voltage, shall be grounded.

Some "Do's & Don'ts": (cont'd)

a. Switchboard frames and structures supporting switching equipment

b. Generator and motor frames in an electrically operated organ

c. Frames of motors

d. Controller cases for motors

e. Electric equipment of elevators and cranes

f. Electric equipment in garages, theaters and motion picture studios

g. Electric signs and associated equipment

h. Motion picture projection equipment

i. Equipment supplied by Class 1 and Class 2 remote control and signaling circuits, in some cases

j. Lighting fixtures

5. Note that there are a few special exceptions to these 10 items.

A Checklist May be Helpful to You:

Yes	No	
___	___	Does the premises involved contain any of the kinds of equipment specified above? (If not, the following items may not be of interest to you).
___	___	Are the persons responsible for your electrical installations aware of these requirements?
___	___	Does your organization have policies which would normally assure compliance with these requirements?
___	___	Is such compliance normally assured by grounding through the metallic raceway enclosing the supply conductors?
___	___	Or by means of an additional conductor run with or close to the supply conductors?
___	___	Are there locations in which an equipment grounding conductor (for example, conduit) is brought close to one of the specified kinds of equipment, but is not bonded to it?
___	___	If there are any such locations, and similar violations, are you instituting a procedure for providing the required continuous, low-impedance ground-fault path?

CODE 250-45 GROUNDING OF EQUIPMENT CONNECTED BY CORD & PLUG

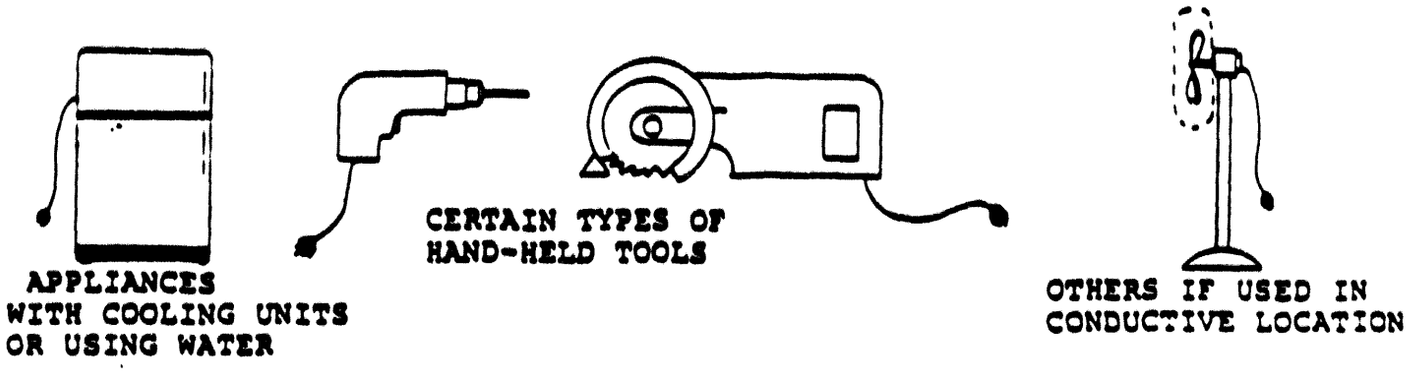

SOME EXAMPLES OF EQUIPMENT REQUIRED TO BE GROUNDED

Frequency of Violations:

On almost any list of electrical violations this requirement appears most frequently. Probable reasons are: (1) this type of equipment is so common; (2) some of the requirements have been added to existing codes within the last 10 years; (3) application of some of the rules requires some judgment; and (4) continuous vigilance is required to maintain compliance.

What Standards are Violated?

OSHA 1910.304 (f) (5) (v) states some specific and some general requirements. The NEC reference is 250-45, which states that (in most instances) exposed noncurrent-carrying metal parts of cord- and plug-connected equipment which are liable to become energized, shall be grounded. The conditions under which grounding is required can be summarized, in general, as follows: (a) hazardous locations (as described in Art 500-517 of the NEC); (b) when operated at more than 150 volts to ground; (c) certain residential applications; (d) in other than residential occupancies, 13 specific types of tools and appliances, and any tools or appliances likely to be used in damp or conductive locations. These conditions are further described under "Do's & Don'ts" in this fact sheet.

Another fact sheet in this series covers Sec. 250-51 "Effective Grounding", and will be helpful in understanding what "grounding" is supposed to do, and how it can best be accomplished. The fact sheets on Sec. 250-42 & 250-43 explain the grounding of fixed equipment.

General Conditions Under Which the Hazard Exists:

The reasons for grounding fixed equipment, as covered in other fact sheets, also apply to cord-and-plug-connected equipment. But the problem is greater with the latter for several reasons, one of which is that the cord-and-plug connection does not automatically provide the grounding conductor usually available for fixed equipment wired by means of a metallic-raceway system.

There seems to be very little question among employees about the requirements in Paragraphs (a) and (b) of Sec. 250-45 (above). Hazardous locations obviously require this extra precaution against the possibility of sparks due to ground faults. And it is fairly well-known that higher voltages increase the hazards of shock and burning to the extent that equipment operated at more than 150 volts to ground must be grounded.

But the question (and violations) seem to rise most frequently with respect to Paragraph (d) which names certain equipment and certain additional conditions under which protective grounding is required. The appliances and tools named are those which are used, or are likely to be used, in more conductive situations. Appliances containing cooling or chilling machines are likely to produce condensation, which makes all surfaces more conductive; tools or appliances using water have the same possibility; hand-held tools make continuous good contact with the hand; tools used out-of-doors involve the possibility of shock current returning thru the earth. These conditions, and accident records, influenced the writing of Paragraph (d).

Some items of equipment which are not specifically named are not required to be grounded if used in an office environment, with nonconductive floors. But the same item, if used in a factory with concrete floors, should be grounded.

Most authorities interpret the words "damp locations" and "conductive locations" to mean locations in which the floor is "damp" or "conductive", so that a person cannot easily escape from the conductive surface. The presence of a few conductive surfaces, other than the floor, would not necessarily impose the same degree of hazard as would the conductive floor.

Description of Hazard:

If a person's body completes the ground-fault circuit from faulted equipment to some other surface, a shock will result. Or if some conductive material should by chance complete the ground-fault circuit, dangerous heating and sparking may result. The voltage across any gap in the ground-fault path may be almost as high as the line voltage, and the voltage from the faulted enclosure to nearby plumbing or earth may approach line voltage if the ground-fault path is not a low-impedance path.

It should be obvious that several conditions influence the degree of hazard. Wet or damp locations, or metallic grounded surfaces in the vicinity, are more conductive than wood or plastic surfaces. Higher voltages may force lethal currents thru a path which would be less hazardous at lower voltages. And explosive or highly combustible materials are more easily ignited by sparks than are ordinary materials.

Is This a Serious Hazard?

The hazard involved with cord- and plug-connected equipment is as serious as that involved with fixed equipment, but the frequency of use and of violations is much greater. The conditions can and often do produce lethal shock currents. Even in cases where the shock does not kill a person, the indirect result of the shock (falling, etc.) may be death or serious injury.

Burns received from such situations may be serious, and in any case are painful. Arcs, sparks, and high temperatures from conductive materials may cause minor or major fires. And explosions are almost always serious.

Some "Do's & Don'ts:

1. Do note that requirements for grounding of fixed equipment are covered in other sections of the Code.

2. Do note that equipment which is fixed, or stationary, or portable, is covered by this section if such equipment is cord- and plug-connected.

3. Do provide grounding for such equipment in hazardous locations; or when operated at more than 150 volts to ground.

4. Do provide grounding for: (1) refrigerators, freezers, and air conditioners; (2) clothes-washing, clothes-drying, dish-washing machines, computer equipment, sump pumps, electrical aquarium equipment; (3) hand-held motor-operated tools; (4) motor-operated appliances of the following types: Hedge clippers, lawn mowers, snow blowers, and wet scrubbers; (5) cord- and plug-connected appliances used in damp and wet locations or by persons standing on the ground or on metal floors or working inside of metal tanks or boilers; (6) tools likely to be used in wet and conductive locations; and (7) portable handlamps.

5. Do note that there are special exceptions to these rules where low-voltage insulating transformers or double-insulated tools are used.

6. Do note that offices in most cases are not considered "conductive locations", but that factory areas having concrete floors usually are.

A Checklist May be Helpful:

Yes	No	
—	—	Are your electrical people aware of these requirements?
—	—	Do you have a standard procedure of providing grounding-type receptacles wherever equipment requiring grounding is likely to be used?
—	—	Have you checked older installations to assure that the old 2-wire cords and plugs have been replaced to provide grounding where required?
—	—	Are your aware that water coolers, dehumidifiers and cooled vending machines have refrigerating units and are required to be grounded?
—	—	Do you have any office-type appliances, such as electric typewriters and fans, which are sometimes used in factory areas.
—	—	If appliances as above are used in areas having concrete floors, are they equipped for proper grounding?

CODE 250-59 METHODS OF GROUNDING, CORD- & PLUG-CONNECTED EQUIPMENT

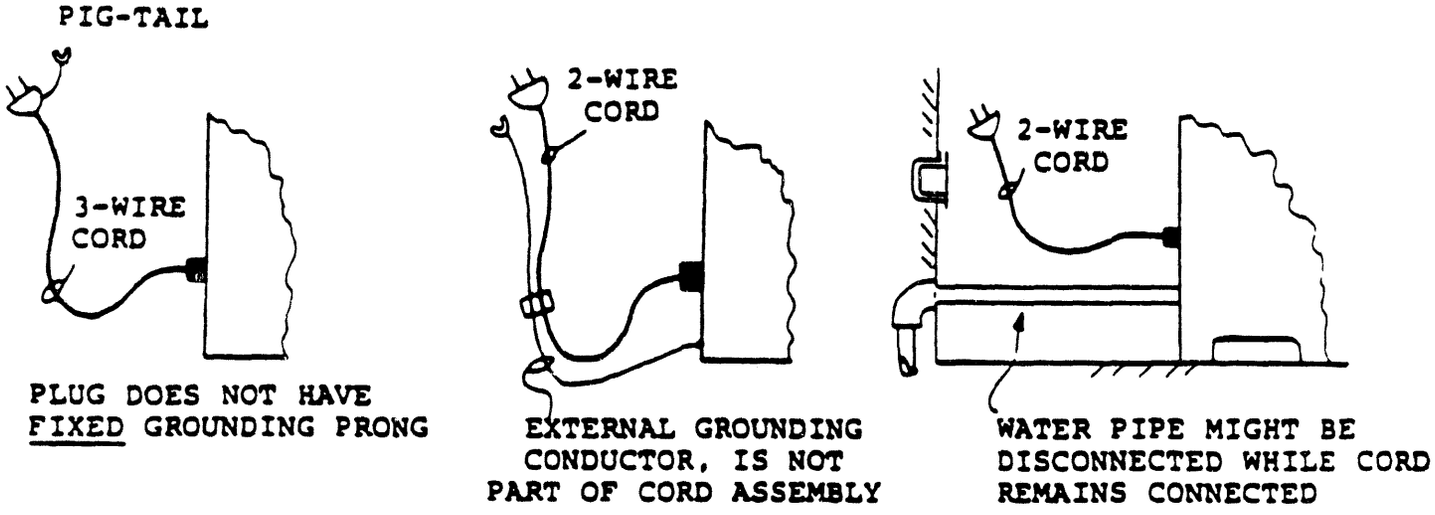

TYPICAL VIOLATIONS OF REQUIREMENTS FOR DEPENDABLE GROUNDING

Number of Violations:

A large number of violations of this requirement exist, partly because of the wide use of cord- and plug-connected tools and appliances, and also because many installations were made before these grounding requirements were widely enforced.

What Standards are Violated?

OSHA 1910.303 (a); (b) (1), (b) (2); 1910.304 (f) (4); (f) (6) (i); and 1910.305 (g) (1) (i) and (g) (2) (iii) all bear on this requirement. Section 250-59 of the NEC is more specific, and states that cord- and plug-connected equipment shall be grounded by one of 3 methods described. The requirements of this section are more easily understood if the fact sheet on "Effective Grounding" Code 250-51 is read first. The basic requirement of both sections is that the equipment-grounding conductors must be run with the power supply conductors. Any other arrangement probably will not fill the need for a path which is permanent, continuous and low-impedance. More specific requirements of this section are found hereinafter under "Do's & Don'ts".

Please note that Sec. 250-59 merely describes the method by which grounding must be accomplished. Whether or not a piece of equipment is required to be grounded is covered by other sections and other fact sheets. See 250-42, 250-43 and 250-45.

General Conditions Under Which the Hazard Exists:

At any time during the life of electrical equipment there is a possibility that the insulation may fail and permit the enclosures or other non-current-carrying metal parts to become energized. The required equipment-grounding conductor must accomplish two things in order to provide the protection desired. First, it must bond all of the electrical enclosures together. This means that the equipment, the raceway, all metal boxes, panelboards, plates, covers, etc., are grounded by means of a continuous metallic path between them and eventually to ground (at the electrical service entrance). This first requirement assures that there will be no danger in touching such parts and other grounded surfaces, because there cannot be a dangerous voltage between two surfaces which are bonded together. The second requirement of the equipment grounding conductor is that it must provide a path which will carry enough current to cause the overcurrent protection device (fuse or circuit breaker) to shut off the flow of current when a ground fault occurs.

Cord- and plug-connected equipment is usually subject to more abuse than equipment supplied by the fixed wiring to the receptacle. If the grounding conductor is protected as well as possible in the cord- and plug assembly, and is arranged so that the grounding connection will invariably be the first to make and last to break contact at the receptacle, we have reasonable assurance of safety. Poor maintenance or make-shift repairs usually result in loss of continuity of the protective grounding path.

Description of Hazard:

There is a shock and burn hazard whenever electrical equipment incurs a fault which energizes external metallic parts. If cord- and plug-connected equipment is not properly grounded, the voltage between the metallic parts and other surfaces in the vicinity may be sufficient to cause harmful or lethal shock to a person bridging the gap. Or, a piece of conductive material becoming part of such a ground-fault path may cause sparking and burning.

This section of the requirements describes methods which have proven to be effective and sufficiently durable to withstand typical conditions of use. Any method other than the approved methods probably will not prevent dangerous voltages between a faulted tool and surrounding conductive surfaces.

Is This a Serious Hazard?

The fact sheet on Sec. 250-45 covers the types of cord- and plug-connected equipment which are required to be grounded, and points out that lack of grounding can be serious hazard. Resulting shocks, burns, fires, or explosions have resulted in deaths and serious injuries. It follows, then, that if such equipment is not grounded by the approved methods those hazards are likely to exist, and are likely to be serious.

Some "Do's & Don'ts":

1. Do make sure that receptacles of the grounding type are provided in areas where equipment is required to be grounded.

2. Do make sure that equipment required to be grounded is grounded by one of the methods described in Sec. 250-59, (a), (b) or (c),

3. Note that Par. (a) (referring to cord in a metal enclosure) and Par. (c) (cords part of a piece of equipment) cover very unusual arrangements, therefore, those paragraphs are not repeated herein.

4. Note that Par. (b) describes the conventional method, the method provided by almost all modern tools and appliances, as follows: "(b) By means of a grounding conductor run with the power supply conductors in a cable assembly or flexible cord that is properly terminated in an approved grounding-type attachment plug having a fixed grounding contacting member. The grounding conductor in a cable assembly may be uninsulated; but where an individual covering is provided for such conductors it shall be finished a continuous green color or a continuous green color with one or more yellow stripes."

5. Do observe that a grounding conductor run from equipment in the form of a separate conductor, not in the cord assembly or not properly terminated in an approved grounding-type plug, is a violation of Par. (b).

6. Do note that the receptacle supplying the equipment must provide the continuation of the grounding path, back to the electrical service entrance, and that this path must meet the requirements of 250-51 and 250-57.

A Checklist May be Helpful:

Yes	No	
___	___	Are the people who purchase, use and maintain this type of equipment aware of these requirements?
___	___	Does the fixed wiring of the premises provide the inherent equipment-grounding path as required by 250-51 and 250-57?
___	___	If not, are you proceeding to install the necessary protective grounding conductors to all receptacles where equipment described in 250-45 is likely to be used?
___	___	Where existing equipment is found to be improperly grounded, are you replacing 2-wire cords and caps with 3-wire cords having approved 3-prong grounding-type plug caps?
___	___	In replacing cords as above, is care being exercised to assure that all connections are made in an approved manner?

CODE 250-5 ALTERNATING-CURRENT CIRCUITS & SYSTEMS TO BE GROUNDED

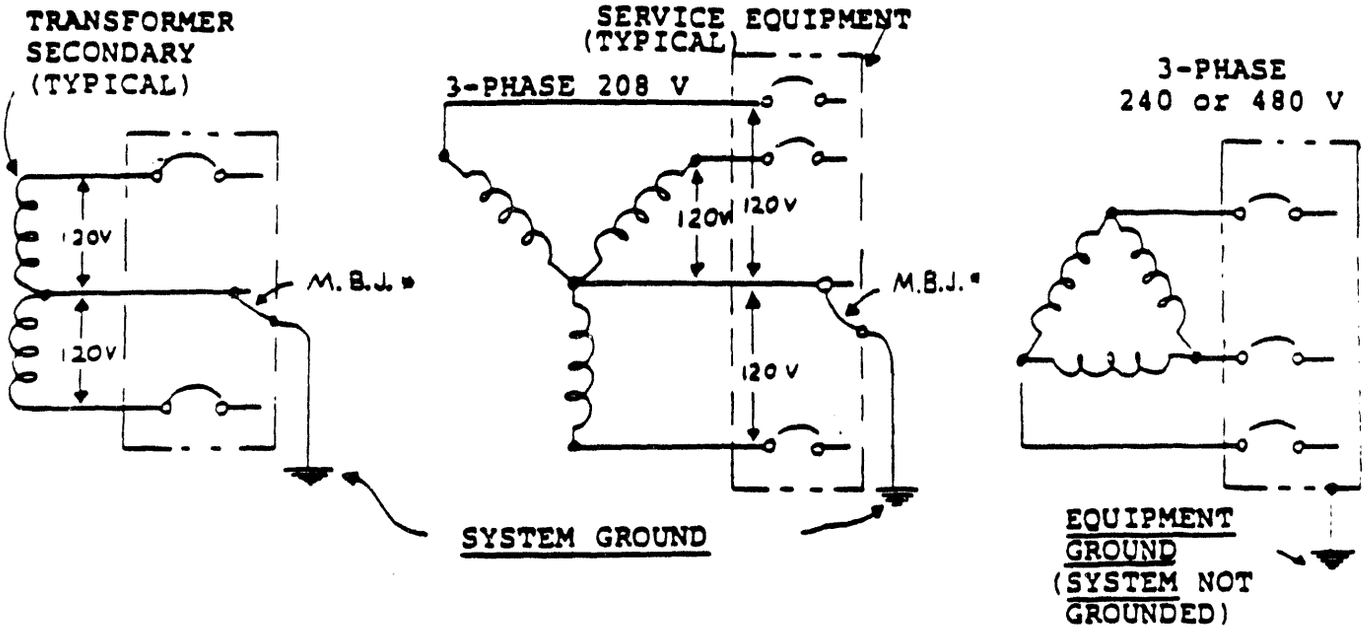

MAIN BONDING JUMPERS* REQUIRED IN GROUNDED SYSTEMS

Frequency of Violations:

A large number of violations are found, which is surprising because the requirements have been in electrical codes for many years and the required connection is supposed to be made at the time the electrical system is installed, as a part of the permanent, fixed wiring of the building.

What Standards are Violated?

OSHA 1910.304 (f) (1) states general and specific requirements. NEC 250-5 covers the most common power supply systems, and states that certain types of alternating-current systems and circuits shall be grounded; which means that an intentional connection (main bonding jumper) shall be made from one of the electrical supply conductors to the service equipment enclosure and to earth (or to some conducting body which serves in place of earth). Paragraph (a) of the reference Section requires systems less than 50 volts to be grounded only if they are exposed to the possibilities of higher voltages. Par. (b) is most widely applicable, and requires that systems of 50 volts and over be grounded if they fall in certain categories, mainly up to certain voltage ratings. Most questions as to the requirement are answered by Sub-paragraph (b) (1) which states that systems shall be grounded "where the system can be so grounded that the maximum voltage to ground on the ungrounded conductors does not exceed 150 volts". Sub-paragraphs (b) (2), and (b) (3), extend the requirements to two specific systems of slightly higher voltage ratings. Some of the other more specific provisions are discussed hereinafter under "Do's & Don'ts".

General Conditions Under Which the Hazard Exists:

Much confusion exists because the Code uses the word "grounding" to mean several different things. It is most important to distinguish at this point between "system grounding" and "equipment grounding". The distinction is that system grounding actually connects one of the current-carrying conductors, as from the terminals of a supply transformer, to ground; whereas "equipment grounding" connects all of the noncurrent-carrying metal surfaces together and to ground. The subject of equipment grounding is treated in other fact sheets in this series, and it is recommended that the sheet on "Effective Grounding (250-51)" be read first in order to better understand how grounding protects people.

Equipment grounding does two essential things: it bonds all surfaces together so that there can be no voltage between them; and it provides a ground-fault current path from a fault location back to the elecrical source, so that the fault current will rise to a level high enough to operate the overcurrent protective device.

System grounding also does two things: it provides the final connection from equipment-grounding conductors to the grounded circuit conductor thus completing the ground-fault loop; and it solidly ties one circuit conductor to "ground", so that voltages from any source cannot cause harmfully high voltage-to-ground. It should be noted that equipment grounding — bonding all electrical equipment together and to ground — is required whether or not the system is to be grounded.

From a grounding standpoint, then, the only difference between a "grounded electrical system" and an "ungrounded electrical system" is that the "main bonding jumper", from the service equipment ground to a current-carrying conductor, is omitted in the ungrounded system. (See Diagram).

It can be seen that when a ground fault occurs in a grounded system, the fault current will immediately find a complete "loop" from the faulted conductor, thru the equipment grounding conductors, and finally thru the main bonding jumper to the grounded conductor at the service entrance. By contrast, when a ground fault occurs on an ungrounded system the fault current does not find a complete loop, so no current flows, and nothing happens except that the system has now become an "accidently grounded system". If a second ground fault should occur to complete the loop, the current would flow between the two faults, hopefully clearing at least one of them.

In an ungrounded system, then, it is advisable to use some detection means to locate and remove ground faults; and persons who operate the system ought to be aware of the situation. Sec. 250-5 requires the most common systems to be grounded, but permits certain systems to be operated ungrounded, on the assumption that the operators of the latter systems will maintain them in an appropriate manner.

Description of Hazard:

A hazard to employees exists whenever a ground-fault occurs in electrical

equipment; and the sooner the fault is cleared the less the exposure. The systems which have the intentional grounding connection will clear ground faults immediately, and the ground fault path is predictable. Ungrounded systems have somewhat unpredictable performance when ground faults occur, including the possibility of unknown voltages to ground. These hazards could be tolerated in some systems, with appropriate precautions, but cannot be tolerated in the systems described in 250-5. One of several reasons is that these systems are frequently used to supply lighting and other loads which employees are likely to contact. Such contact can result in shocks and burns.

Is This a Serious Hazard?

There is always the possibility that shocks and burns will be serious, but it is not accurate to say that a violation of this requirement invariably leads to a serious hazard. If the equipment is properly grounded, as described in the fact sheet on "Effective Grounding" (250-51), and if the installation is well maintained, the hazard of leaving the system ungrounded may not be serious. But the danger of unpredictable voltages from lightning and other unusual sources should not be overlooked, and this danger is more prevalent on ungrounded systems.

Some "Do's & Don'ts":

1. Do ground all AC systems of less than 50 volts if such systems are exposed to the possibility of high voltages (as required by 250-5 (a)).

2. Do ground all AC systems supplying premises wiring, under any of the following conditions (as required by 250-5 (b)):

   a. Where the system can be so grounded that the maximum voltage to ground, on the ungrounded conductors, does not exceed 150 volts.

   b. Where the system is normally rated 480Y/277-volt, 3-phase, 4-wire in which the neutral is used as a circuit conductor.

3. Do note that the requirements for the equipment grounding conductor remain the same whether or not the system is permitted to be ungrounded.

A Checklist May be Helpful:

Yes	No	
___	___	Are the persons responsible for your electrical installations aware of these requirements?
___	___	Are they aware that these requirements apply to plant-wide electrical systems and also to separately-derived systems serving only parts of the premises?
___	___	If your premises has a 240/120-volt, 1-phase, 3-wire system, is the neutral grounded?
___	___	If your premises has a 208/120-volt, 3-phase, 4-wire system, is the neutral grounded?
___	___	If your premises has a 240/120-volt, 3-phase, 4-wire system, is the midpoint of one phase grounded?
___	___	If your premises has a 480Y/277-volt, 3-phase, 4-wire system, with 277-volt load connected, is the neutral grounded?

CODE 240-24 LOCATION OF OVERCURRENT DEVICES

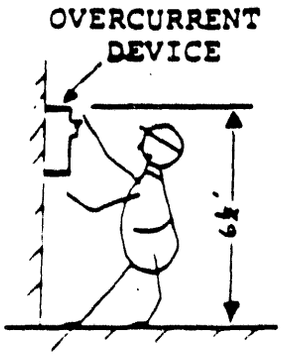

OVERCURRENT DEVICES MUST BE READILY ACCESSIBLE

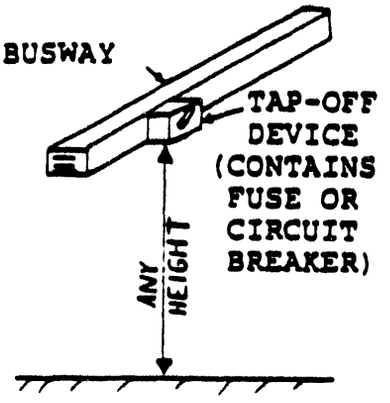

OVERCURRENT DEVICE ON BUSWAY IS EXCEPTION

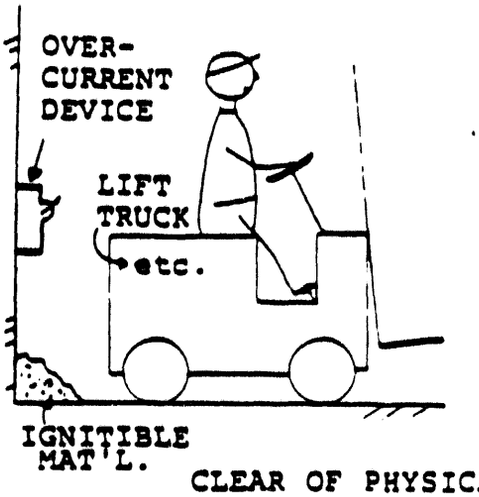

CLEAR OF PHYSICAL DAMAGE AND EASILY IGNITIBLE MATERIAL

Frequency of Violations:

Hundreds of violations of this standard are found each year. Compliance is easy in new installations, but in existing installations the correction becomes less convenient. For this reason the violations are found more frequently in older buildings, particularly industrial occupancies.

What Standards are Violated?

OSHA 1910.304 (e) (1) (iv) states the general requirements. More specific information and exceptions are stated in NEC 240-24, which requires that overcurrent devices shall be located where they will be:

a. Readily accessible

b. Not exposed to physical damage

c. Not in the vicinity of easily ignitible material

d. Where each occupant will have access to the devices protecting his occupancy.

Article 100 of the NEC defines "readily accessible" as follows: Capable of being reached quickly, for operation, renewal, or inspections, without requiring those to whom ready access is requisite to climb over or remove obstacles or to resort to portable ladders, chairs, etc.

With respect to Par. (d) above, the word "occupant" is generally interpreted to mean the responsible occupant, not necessarily every man, woman and child who may be on the premises.

There are three exceptions to the requirement for ready accessibility, but they do not change the common applications of the rule. Exception No. 1, referring to "services", covers certain rather special arrangements of service overcurrent protection, at the sources of building power. The exception referring to Sec. 364-12 is for overcurrent devices located on busways, which may be located at any distance above the floor. The reason for permitting this exception is that the busway installation provides so many advantages over other methods of distributing power that the compromise is acceptable.

General Conditions Under Which the Hazard Exists:

Overcurrent devices are installed to protect conductors and equipment from the destructive effects of overcurrent, which may be due to overloading or to faults (short circuits and grounds). Such protection is always provided by either fuses or circuit breakers, which function to open the circuit in case the current flow exceeds a safe value. Overload relays, being more sensitive than fuses and circuit breakers, are commonly used for additional overload protection of motors.

Most fuses and circuit breakers operate at elevated temperatures at least some of the time, and on occasion they may emit flashes or sparks. The functions they perform require proper operation and maintenance because of the tremendous amounts of energy likely to be handled during a fault. Overload relays have to be inspected periodically, maintained properly, and occasionally replaced. Also, when troubles occur, it may be desirable to reach any of these devices quickly.

In many premises the original installation of overcurrent devices may have been in compliance, but subsequent activities have resulted in violations. It should be obvious that material stored, or inadvertantly placed, in front of such devices usually creates several hazards. At the very least, material blocks access to the devices, and it may also expose them to physical damage. If such materials are readily ignitible, a fast spreading fire may result.

Physical damage often results when overcurrent devices are located where they can be struck by lift trucks or other vehicles, by crane hooks, by materials being handled, etc.

A less common violation is the situation occasionally found where an employer's premises are supplied by an electrical feeder over which the employer has no control. The Code requires that an occupant (usually the employer) must have access to the overcurrent devices for his premises. In some cases the requirement may be fulfilled if a responsible management representative is available whenever employees are on premises (as in the case of multi-occupancy premises).

Description of Hazard:

Whenever overcurrent devices are installed where they are not readily accessible they are likely to be neglected, and neglect is liable to lead someday to a violent failure. Also, when such devices are not within reach from the floor, there will be a temptation to operate them with sticks,

metal rods, ropes, etc., which are uncertain means and may damage the operating mechanism. Dependence on portable ladders is undesireable for several reasons, one of which is that employees frequently resort to standing on a box or chair rather than finding the ladder.

Neglected overcurrent devices may overheat, or start fires when they attempt to interrupt large fault currents.

In many cases overcurrent devices also serve as disconnecting means, therefore, it may be necessary to reach them quickly when troubles occur. The time lost in climbing over obstacles or finding ladders may cause a minor incident to become a major hazard.

Is This a Serious Hazard?

In most cases this violation might not be considered a serious hazard, although it has caused some serious accidents. Violations which result in falls, or in small fires may or may not be serious. And small fires which become large fires are likely to be serious hazards to employees.

Some Do's & Dont's":

1. Do make sure that all new installations comply with these requirements.

2. Do institute a program to bring existing installations into compliance as quickly as possible, starting with the most objectionable instances.

3. Don't depend on ladders, boxes, ropes, chains, or hook-sticks as substitutes for proper location of overcurrent devices.

4. Do maintain a continuous vigilance to make sure the boxes, cartons, material in process, waste, racks, etc., are not permitted to accumulate in front of switchboards, panelboards, fuses, circuit breakers and motor controllers.

5. Do not locate these devices so close to the floor that they will be subject to abuse and will be difficult to maintain.

A Checklist May be Helpful:

Yes	No	
___	___	Are the persons responsible for your electrical installations aware of these requirements?
___	___	Are there any installations underway at this time which should be checked for compliance?
___	___	Are there any fused switches, circuit breakers or motor controllers located with the top of the device higher than 6½ feet above the floor?
___	___	In any cases as described above, can the hazard be abated by moving the devices to more accessible locations?
___	___	Are there locations where a permanent ladder, platform or catwalk might be the only solution?
___	___	Do you have a genuine continuing program of checking to make sure that obstacles are not placed in front of switchboards, panelboards, fuses, circuit breakers and motor starters?
___	___	Where physical damage is a problem and relocation is not a good solution, are you providing guard rails or bars in front of such equipment?

CODE 400-9 SPLICES IN FLEXIBLE CORDS

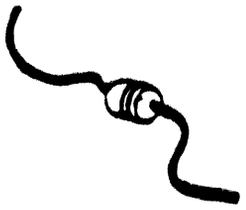

EXTENSION CORDS MAY BE CONNECTED BY MEANS OF CORD-CONNECTOR BODIES & PLUG CAPS

TAPS SHALL NOT BE MADE IN CORDS

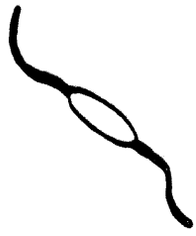

PROPERLY MADE SPLICES MAY BE USED TO REPAIR CORDS

Frequency of Violations:

Flexible cords are very widely used, and are essential to many applications. But they are frequently misused, and improper splices are common indications of, and examples of such misuse. For these reasons this rule is usually found on lists of standards most frequently violated.

What Standards are Violated?

OSHA 1910.305 (g) (2) (ii) states the general requirements. NEC 400-9 is similar and states that "flexible cord shall be used only in continuous lengths without splice or tap", but that "hard service cord" (see 400-4) of #14 or larger may be repaired if spliced so that the splice retains the safety of the cord being spliced.

These references are implemented by Sec. 110-12 of the NEC, which requires work to be done "in a neat and workmanlike manner", and Sec. 110-14 which adds the following requirements:

1. splicing devices shall be suitable for the purpose
2. soldered splices shall be mechanically and electrically secure before soldering
3. splices and joints shall be covered with an insulation equivalent to that of the conductors...

General Conditions Under Which the Hazard Exists:

Sec. 400-7 and Sec. 400-8 outline the conditions under which flexible cords may and may not be used. Obviously the conductors in flexible cord are not as well protected from physical abuse as are the conductors in a "fixed wiring" method. Therefore, the outer covering of the cords is frequently damaged to the extent that the insulation on the individual conductors is exposed, and this insulation soon fails. If the remainder of the cord is still in good condition, and if a repair splice is properly made, the cord may not

be any more of a hazard than it was originally. However, a cord having several splices in it would seem to indicate that the cord is misapplied or misused, and Compliance Officers become concerned about the hazard which must have existed in each case just before the repair was made.

Sometimes splices are made to lengthen a cord, or to tap off two cords from one. This is an outright violation, and indicates that the cord is not being applied as permitted in Sec. 400-7 and 8.

Where splices are permitted and necessary they must be made with proper materials and with great care, otherwise they become an especially vulnerable part of the cord assembly.

Description of Hazard:

In certain well-protected applications flexible cords may consist of conductors having no rugged outer covering. In such construction any damage to the insulation will almost certainly expose the live conductors, therefore such cords should generally be replaced rather than attempting a repair. Such cords are suitable only when attached to a small appliance, in length not exceeding 8 feet. Examples are "lamp cords" and "zip" cords.

In the heavier-duty construction, which is more suitable for most commercial and industrial premises, the additional protection of the outer covering makes possible a reasonably safe repair, and gives one some assurance that the cord is worth saving.

Whenever the cord insulation is damaged, the exposed conductors may find a current path through persons or thru materials in the vicinity. If splices or repair-splices are made, the frequency of failures seems to increase, either in the splice or immediately adjacent to it. Thus the possibility of shock and burns increases rapidly as the number of splices increases.

Is This a Serious Hazard?

If shocks or burns are received directly from the exposed cord conductors, injuries are usually not serious because a person is not likely to make a good contact with such a small exposed area and because he can generally escape from the contact quickly. However, there is always the possibility that in unusual circumstances he may not be able to disengage himself quickly, or that the contact with the conductors might be made by other, larger surfaces, which could inflict a more damaging shock or burn.

Some "Do's & Don'ts":

1. Do make it a policy to use complete cord sets (plug cap, cord, and connector body) where extension cords are needed.

2. Do use several cord sets for temporary extension needs, properly interconnected by approved devices, rather than splicing.

Some "Do's & Don'ts": (cont)

3. Don't tap off a branch from a cord to provide for two appliances or tools.

4. Do discard the inexpensive light-duty flat type cords rather than attempting to repair-splice them.

5. When making a repair-splice to the heavy-duty cords, do make sure that the completed splice retains the insulation, outer-sheath properties, flexibility and usage characteristics of the original cord.

A Checklist May be Helpful:

Yes	No	
___	___	Are your employees aware of this requirement?
___	___	Have you established a policy of not using splices to extend new cords?
___	___	Do you permit splice-repairs in a cord only where this will result in a situation as safe as the original cord provided?
___	___	Do your people adhere to the requirements of Sec. 110-14, so the electrical joints will be permanent, the insulation will have adequate electrical properties, the outer covering will have the necessary resistance to abuses, and the entire splice will be flexible enough, for the intended use?

CODE 110-14 ELECTRICAL CONNECTIONS

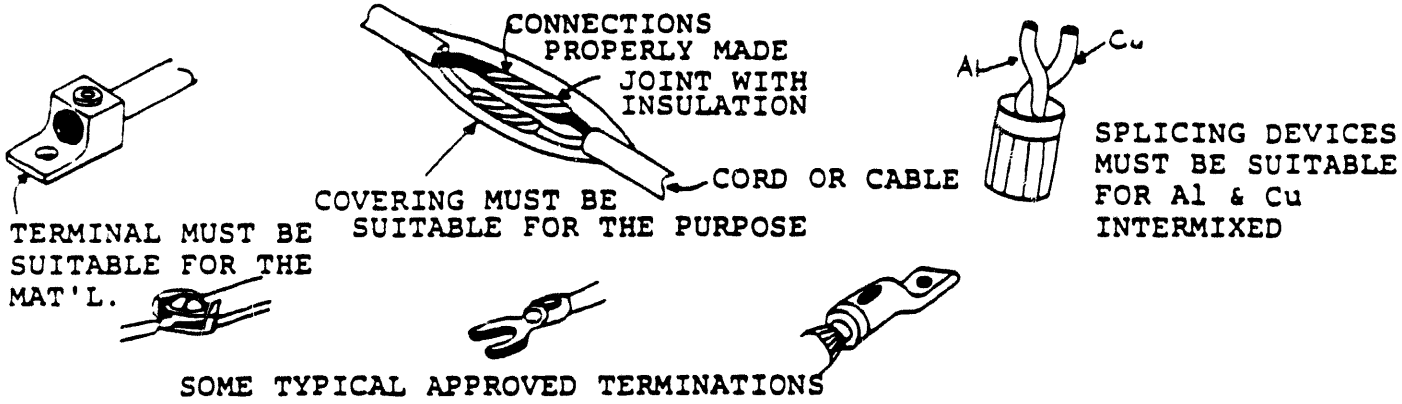

Frequency of Violations:

This is one of the frequently violated standards, but it is difficult to find why this should be so. It is actually easier to make electrical connections properly than improperly (and probably less costly). And the reduction of problems, if connections are properly made, would seem to justify the effort.

An interesting fact is that these poor connections are almost always covered, therefore they probably would not have been noticed if they had not been causing trouble.

What Standards are Violated?

OSHA 1910.303 (c) covers how splices shall be made; and 1910.303 (a) and (b) are applicable to all connections. NEC 110-14 is more specific, and recites a number of requirements that are almost classical traditions in the electrical trade. This reference is too long to quote in its entirety, but here is a summary:

General: Because of the different characteristics of copper (Cu) and aluminum (Al) devices such as terminals or splicing connectors shall be suitable for the material of the conductor and shall be properly installed and used. Conductors of dissimilar metals shall not be intermixed in a terminal or splicing conductor where physical contact occurs between dissimilar conductors, unless the device is suitable for the purpose.

a. Terminals: Connection of conductors to terminal parts shall insure a thoroughly good connection without damaging the conductors and shall be made by means of pressure connectors, solder lugs, or splices to flexible leads. (Except that certain smaller size wires may be connected directly to screw terminals approved for the purpose.)

b. Splices: Conductors shall be spliced or joined with splicing devices suitable for the use, or by soldering. Soldered splices shall first be so spliced or joined as to be mechanically and electrically secure without solder, and then soldered. All splices and joints and the free ends of the conductors shall be covered with an insulation equivalent to that of the conductors, or with an insulating device suitable for the purpose.

Another applicable section of the Code is Sec. 110-2, which requires that materials, devices, etc., shall be "approved". This means that the connecting devices and all splicing materials must be listed by a nationally-recognzed laboratory (such as Underwriters' Laboratories or Factory Mutual) as suitable for the purpose and conditions of use.

General Conditions Under Which the Hazard Exists:

In any installation there are many places where conductors must be spliced, connected or terminated, and such places are inherently weak points in the electrical system. The dangers are that the conductors may separate from the joint and make contact with other conductive parts; the joint may loosen and start to heat due to high resistance; dissimiliar metals may react in such a way that high resistance develops; conductors may break at or close to the joint; insulating materials may break down and allow current to pass from the conductor to other surfaces; the outer sheath (or "covering") may be damaged physically or chemically; or the completed splice may become a hazard simply because of poor workmanship (workpersonship?).

Description of Hazard:

Whenever live conductors make contact with noncurrent carrying metal parts or enclosures there is a danger of contact with perosns or other objects. If a person becomes part of this fault circuit from the energized part thru adjacent surfaces or ground, back to the source of power, a shock will result. If conductive objects become part of this circuit the result may be heating, sparking, and a fire.

If a joint or connection begins to loosen, or develops high resistance because of some other condition, the resulting heat will deteriorate the insulation and covering to the extent that the dangers mentioned above become more probable. If the poor connection happens to be in the equipment grounding conductor, then shocks may occur due to ineffective grounding.

If a completed splice is too stiff as compared to the cord containing it, or is made of materials inappropriate for conditions, the person handling the cord may be exposed to greatly increased hazards of burns or shock.

Is This a Serious Hazard?

The hazards created when connections are not properly made do not usually create serious hazards to employees. Portions of conductors which become exposed are usually rather small, so that the area of contact with a person's skin is limited, and usually the person is able to react in a way to escape from that contact. Burns are likely to be small and, again, the affected person usually withdraws quickly. However, there is always a possibility that a shock or burn may be serious in some particular case.

When connections overheat they occasionally start fires, which may turn out to be minor or major. Even in case of a major fire there may be no deaths or injuries, but there certainly is a possibility of serious hazard.

Some "Do's & Don'ts:

1. Do make sure that only qualified persons make electrical connections.

2. Do use only approved devices and materials for splices and terminations.

3. Do make sure that materials used are appropriate for the particular conditions under which they will be used.

4. Don't tolerate "short-cuts" or make-shift methods in electrical connections.

5. If in doubt, do check with material manufacturers for proper methods of making connections.

6. Do note that wiring devices such as receptacles must be marked CO/ALR if used with aluminum wire. The older devices marked Al-Cu have been found troublesome and are no longer approved.

7. Do note that some splicing devices are approved for copper or aluminum, but not for both metals intermixed.

8. Do continually emphasize the importance of good workmanship, regardless of what materials are used.

A Checklist May be Helpful:

Yes	No	
___	___	Are electrical connections made only by persons who are familiar with these requirements?
___	___	Are proper materials available for making connections and repairs which may be required?
___	___	Is any aluminum wire used for wiring on the premises?
___	___	If aluminum wire is used, are all connectors and devices used approved for this material?
___	___	Do your employees know that they should report the situation whenever they discover a receptacle, switch, or other device which seems to be overheating?
___	___	In particular, do you make sure that splicing materials used are appropriate, considering possible presence of oil, solvents, water, metal chips, etc.?

CODE 110-21 MARKING OF EQUIPMENT

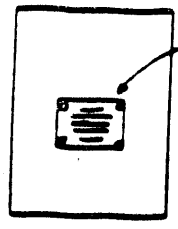

NAMEPLATE SHOWING MFR., RATING, ETC.

SWITCH, CIRCUIT BREAKER, PANEL, CONTROLLER, ETC. MUST BE MARKED

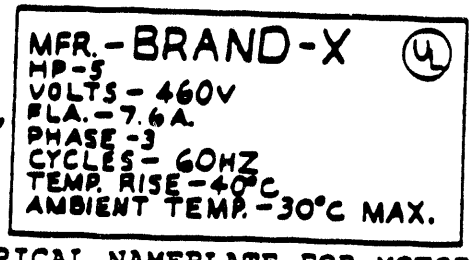

TYPICAL NAMEPLATE FOR MOTOR

NAMEPLATE SHOWS MAX. VOLTAGE (eg. 600V)

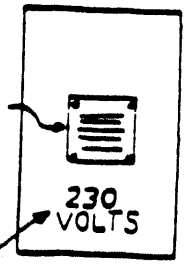

STENCIL SHOWS VOLTAGE ACTUALLY APPLIED

Frequency of Violations:

This standard is usually among the top 16 of those most frequently violated but this may be partly due to the fact that violations are so easily noticed.

What Standards are Violated?

OSHA 1910.303 (e) states the rather specific requirement. NEC 110-21 is similar as follows: "The manufacturer's name, trademark, or other descriptive marking by which the organization responsible for the product may be identified, shall be placed on all electrical equipment. Other markings shall be provided giving voltage, current, wattage, or other ratings as are prescribed elsewhere in this Code. The markings shall be of sufficient durability to withstand the environment involved." Sometimes this section is confused with Sec. 110-22 "Identification". The difference is that Identification (as used in the Code) means marked to indicate the purpose of a disconnecting means, rather than its rating.

General Conditions Under Which the Hazard Exists:

All electrical equipment is required to safely perform its intended function, but it can only do so if it is used as the designers intended. Equipment is designed to be used under conditions which will permit the electricity to perform its function without becoming a hazard. These limited conditions must be marked on the equipment so that the installer or user will not mistakenly subject the equipment to conditions which will damage it and possibly injure people.

The rated voltage of equipment is sufficient to do the desired work; but higher or lower voltage may be harmful. The rated current of equipment is the current which the equipment should draw when connected to rated voltage and applied to its intended task. If the user does not know the current rating of the equipment, he may attempt to use it on circuits not capable of supplying rated current, which usually leads to problems.

The rated wattage may be marked on some equipment in lieu of a current rating, and this rating can also be used to assure that the supply circuit is adequate. Other supply requirement are also necessary, such as: frequency (given in cycles-per-second or "Hertz"): phase (such as single-phase or 3-phase); and d.c. or a.c.

If the manufacturers name is not marked on the nameplate there will be difficulty in tracing the reasons for faulty performance and in preventing future failures. Sometimes it is necessary to know the manufacturer in order to determine if equipment is approved for a particular purpose. Most nameplates include a symbol or notice of testing by a recognized testing laboratory (for example, "U.L."), which is helpful to any inspector. The manufacturers name is also necessary in many cases so that the user can obtain information or replacement parts.

The marking described above is almost always provided on the name-plate of the equipment of reputable manufacturers. Violations usually appear when the nameplate is covered by some part of the installation, is removed, or is obliterated by painting or other abuse.

Another condition which sometimes leads to hazards is that in which the nameplate gives an alternate, or a maximum rating for the equipment, differing from the rating actually used. For example, some equipment can be arranged to operate on either 115 volts or 230 volts, depending on some internal connections. The nameplate will not state which voltage is actually being applied; therefore, it would seem appropriate to add a specific marking (stencil, decal, etc.) so that a person replacing the equipment would not apply the wrong voltage.

Description of Hazard:

If an item of equipment is connected to a voltage higher than its rating, the chances are that a violent failure will result. If it is connected to a voltage below its rating, it may attempt to perform its intended function, but may overheat badly and eventually fail. If AC equipment is energized with the wrong frequency, or with direct current, it will probably fail violently. These occurrances can cause burns to employees, and may cause fires.

If equipment is connected to a circuit not adequate for the load, conductors may overheat and deteriorate. Overcurrent protective devices should prevent serious damage in such a case, but sometimes these devices have been tampered with and do not protect properly.

Is This a Serious Hazard?

In general these violations are a hazard to equipment and buildings rather than to personnel, but in some cases the flashes and burns are injurious to people. Anything which enables the applier and user to avoid such incidents certainly makes the hazard less serious.

Some "Do's & Don'ts":

1. Do make sure that the proper electrical characteristics for your application are specified whenever equipment is purchased.

2. Do make sure that the appropriate ratings actually are marked on nameplates when equipment, new or used, is received from any source.

3. Don't allow anyone to paint over or otherwise obliterate the nameplate on any equipment.

4. If there are several voltages available in a plant and the nameplate does not specify the voltage at which the equipment is acturally used, do apply additional markings so that incorrect connections will not be made.

A Checklist May be Helpful:

Yes	No	
___	___	Are the persons who purchase and apply electrical equipment aware of these requirements?
___	___	Do you have more than one type of electrical supply available on your premises (AC vs DC, 3-phase vs 1-phase, 460 vs 230 vs 115 volts, etc.)
___	___	In places where there may be doubt as to these characteristics, do you apply additional field marking to indicate the actual voltage, etc., involved?
___	___	Are there any nameplates which have been painted over, or which cannot be read for any other reason?
___	___	Have employees been instructed to mask or protect nameplates when painting?
___	___	Are there any cases where equipment is operating at a temperature above the safe temperature shown on the nameplate?
___	___	If your premises includes any hazardous locations (as described in Articles 500 thru 517 of the Code) are there visible nameplates showing the equipment is listed as suitable for such locations?

CODE 110-16 WORKING CLEARANCES ABOUT ELECTRICAL EQUIPMENT

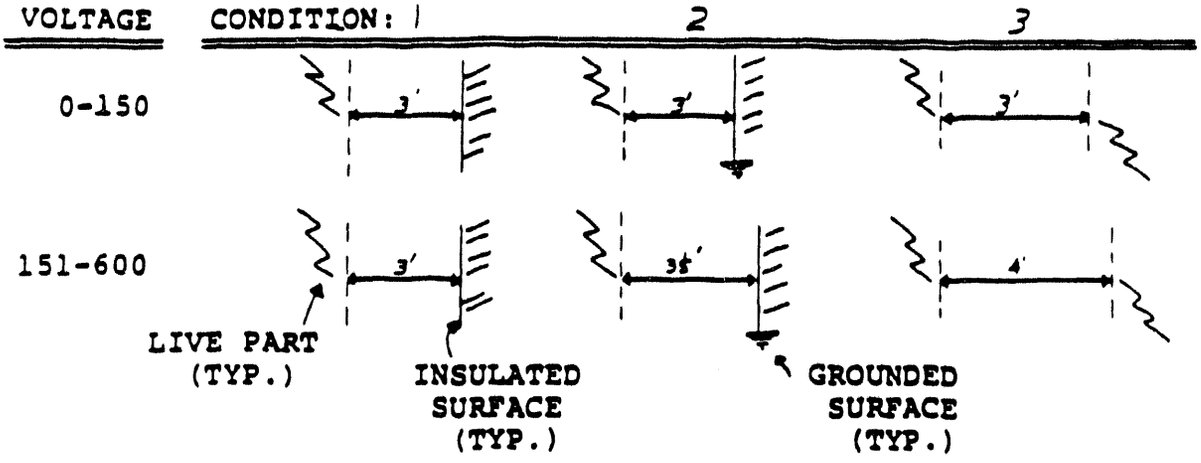

WORKING SPACE IN FRONT OF LIVE PARTS

Frequency of Violations:

On the list of most frequent electrical violations in small establishments this one usually appears about 15th from the top. In actuality there are more violations than this seems to indicate, but OHSA does not enforce this standard retroactively, therefore, equipment which was not installed or changed since March 15, 1972, might not be cited unless it constituted a "recognized hazard." Hazards resulting from this type of violation are sometimes cited under Sec. 110-17, "Guarding of Live Parts," which is enforced even though the installation was made prior to the above date.

What Standards are Violated?

OSHA 1910.303 (g) (1) states the rather specific requirement. NEC 110.16 is similar, requiring sufficient access and working space be maintained about all elecrical equipment to permit ready and safe operation and maintenance. Note that we are concerned here about the safety of the person qualified to work on the equipment (presumable an electrician), whereas in Sec. 110.17 the concern is for any person who might accidentally make contact with live parts. Obviously the hazard must be treated in a different way if the person will remove guards and enclosures and actually work on the live parts.

Paragraph (a) of Sec. 110-16 states that the working space in the direction of access to live parts which are likely to require examination, adjustment, servicing or maintenance while alive, shall not be less than indicated in the chart above. In addition, the work space shall be at least 30 inches wide in front of the equipment.

The remaining paragraphs of the section require that the working spaces shall not be used for storage, that access to the working space be maintained, and that reasonable illumination and headroom be maintained.

Some additional coverage of the requirements will be found in this fact sheet under "Do's & Don'ts".

General Conditions Under Which the Hazard Exists:

Almost all electrical equipment requires operational or maintenance procedures, either frequently or occasionally, in order to continue to perform its functions. If sufficient access and working space are not provided, either the equipment will be neglected until it becomes a hazard, or employees will be required to work in cramped and unsafe situations. If access is difficult, or if obstacles must be moved, the resultant delay might allow a minor problem to become a major hazard.

The special hazard which exists when electricians work on live parts should be obvious. The presumption is that persons doing this work are qualified, therefore, they should be able to work safely if the conditions do not impose unreasonable hazards. A qualified electrician knows that he must make sure that he does not touch live parts while he is in contact with other conductive surfaces. But there is always the possibility of an accidental contact, either with a live part or with some grounded surfaces.

In most cases the electrician considers the floor to be an unavoidable grounded surface, and takes necessary precautions; but while he is concentrating on the work in front of him he may forget about the other hazardous surfaces behind, above, and at each side of him. No person, even a well-qualified electrician, should be required to work in proximity to live parts without sufficient clearance to move a few inches in all directions safely.

Description of Hazard:

In many cases the accident occurs when the employee has no intention of "working on" the live parts. His intent may have been to inspect, examine, or adjust, without contacting any bare, energized surfaces. But a contact occurs because of a slip or a momentary lapse of attention. Or he may intend to, for example, connect a new circuit into a panelboard, which he should be able to do safely if the circuit terminal is switched off. But he makes contact with the wrong terminal, or with some other live part in the panel. In other cases the electrician may be intentionally working on the live parts. Assuming that the employee has insulated himself from the floor (by insulating floor covering, or mat, or insulating shoes), he still has a number of hazards to keep in mind.

1. The actual work of his hands involves the danger of touching two surfaces having voltage between them. (He should be wearing approved insulating gloves but for some types of work this is not practicable.)

2. Conductive tools he is using may contact two such surfaces. Blinding flash, arcing, and spattering molten metal may result.

3. While touching an energized part, some other portion of his body (elbow, leg, head, shoulder) may touch a surface among his suroundings. This surface may be grounded or energized, and in either case will probably provide a current flow path which could shock him.

4. Even a trained electrician may forget that masonry surfaces (concrete, brick, tile) are more or less conductive under various conditions. Leaning against a surface which did not seem to be a hazard has caused electrocutions.

So the hazard is that current will try to flow thru any path that is offered to it. A few thousandths of an ampere thru a person (known as the "let-go" level of current) can cause loss of control of muscles, with consequent indirect injuries. Less than one-tenth of an ampere (which can be encountered with 115 volts or less) frequently kills people. Contact made thru conductive materials can carry thousands of amperes, causing damage to eyes and flesh; and such high amperage shorts or grounds can start a fire.

Is This a Serious Hazard?

These hazards are indeed serious, because the situations involved usually have the possibility of direct and extensive contact with the energized surfaces. The extent of area and the pressure involved in the contact influence the amount of current which will flow.

The only factor which might lessen the seriousness of the violation is a set of circumstances which will ensure that employees will not work on the equipment while it is energized.

Some "Do's & Don'ts":

1. Do make sure that access and working space are provided and maintained so that operation and maintenance can be performed safely and conveniently. Equipment likely to require such work is switchboards, panelboards, switches, circuit breakers, controllers, etc.

2. Do use "aisle markings" and signs as a minimum, and in most cases use more definite means to assure that the space requirements are observed.

3. Do make sure that the working space in front of live parts which are likely to require examination, adjustment, servicing or maintenance while alive, meets these requirements as a minimum.

4. Do note that concrete, brick, or tile walls are considered as grounded.

5. If there is any existing equipment which cannot be made to meet these requirements, don't permit employees to work on such equipment while it is energized. "Safety orders" and signs may not be adequate to prevent this, but in some cases interlocks or other physical deterrents may be.

A Checklist May be Helpful:

Yes	No	
___	___	Are the persons who plan your layouts and equipment locations aware of these requirements?
___	___	Are your electricians aware of these requirements?
___	___	Are the spaces necessary for operation and maintenance marked or otherwise adequately protected to prevent encroachment?
___	___	Is there an on-going program to ensure that these precautions will not be forgotten?
___	___	Are there any switchboards, panelboards, switches, circuit breakers, motor starters or other types of controllers, which do not have the specified working space?
___	___	In cases where such violations exist, can they be corrected by:
		1. Rearranging the equipment?
		2. Applying a permanent insulating covering to the intruding surface?
___	___	In cases where the clearances cannot be obtained, can precautions be taken to ensure that the equipment will not be examined, adjusted, serviced or maintained while alive?

SIX OUTLINES
OF
ELECTRICAL REQUIREMENTS UNDER OSHA

Simplified Listing of Requirements
In 29 CFR 1910 and 29 CFR 1926

By William S. Watkins, P. E.

(Reprinted April, 1988)

Introduction

A collection of six separate "outlines" of important items, covered by the Code of Federal Regulations (CFR), which may be of special concern to persons responsible for electrical safety in plants and in construction. We have divided the regulations into six Outlines, each under a title which describes the general area covered by the references listed thereunder. This Outline No. I serves as a Table of Contents to assist in rapidly locating the subject of interest. This particular Outline also shows the basic requirements in CFR 1910, Subpart S.

OUTLINE NO. I

Outline Number

"Electrical Requirements Under OSHA"

Part 1910

Introduction & Outline Numbers

Subpart S - Electrical, 1910.301 to .399

II "Some General Plant and Building Requirements Under OSHA"

Part 1910

Subpart B - Adoption and Extension of Established Federal Standards

D - Walking-Working Surfaces

E - Means of Egress

F - Powered Platforms, Manlifts and Vehicle-Mounted Working Platforms

H - Hazardous Materials, 1910.103 to .104

J - General Environmental Controls; L - Fire Protection

III "Hazardous Locations Under OSHA"

Part 1910

Subpart H - Hazardous Materials, 1910.106 to .110

"Some Specific Machinery Requirements Under OSHA"

Part 1910

Subpart N - Materials Handling and Storage

O - Machinery and Machine Guarding

P - Hand and Portable Powered Tools and Other Hand-Held Equipment

Q - Welding, Cutting and Brazing

V "Special Industries Under OSHA"

Part 1910

Subpart R - Special Industries

VI "Construction Safety Under OSHA"

Part 1926

Subpart C - General Safety and Health Provisions

D - Occupational Health and Environmental Controls

F - Fire Protection and Prevention

I - Tools - Hand and Power

J - Welding

K - Electrical

L - Ladders and Scaffolding

N - Cranes, Derricks, Hoists, Elevators and Conveyors

V - Power Transmission and Distribution

SUBPART S - ELECTRICAL

This Subpart was revised, effective April 16, 1981, to remove the specific reference to the 1971 National Electrical Code (NEC) and thus shorten and simplify the standards. However, it will be noted that familiarity with the latest NEC is essential in effectively applying the new performance-oriented standards.

General

1910.301 Introduction.

Design Safety Standards for Electrical Systems

1910.302 Electrical Utilization systems.
1910.303 General requirements.
1910.304 Wiring design and protection.
1910.305 Wiring methods, components, and equipment for general use.
1910.306 Specific purpose equipment and installations.
1910.307 Hazardous (classified) locations.
1910.308 Special systems.

Definitions

1910.399 Definitions applicable to this subpart.

OUTLINE NO. II

SOME GENERAL PLANT & BUILDING REQUIREMENTS UNDER OSHA

Subpart B - Adoption and Extension of Established Federal Standards

1910.12 Construction Work

(a) & (b) See Part 1926 for Construction Requirements

Subpart D - Walking-Working Surfaces

1910.26 Portable Metal Ladders

(c) (3) (viii), Safety measures near electrical circuits

1910.27 Fixed Ladders

(b) (1), Rungs designed so that the foot cannot slide off the end. (For example, in manholes)

Subpart E - Means of Egress

1910.36 General Requirements

(b) Fundamental Requirements
(1) thru (7), Exits, Exit Marking, Lighting, Fire Alarms required.

1910.37 Means of Egress, General

(q) Exit Marking
(1) thru (3), Signs, Sign Lighting, etc.

Subpart F - Powered Platforms, Manlifts, and Vehicle-Mounted Work Platforms

1910.66 Powered Platforms for Exterior Building Maintenance

(c) Type F Powered Platforms
(22), Electrical Wiring and Equipment
(i) thru (xxi) Special Requirements

(d) Type T Powered Platforms
(6), Electrical Wiring & Equipment
(i) and (ii) Shall comply with ANSI A120.1-1970

1910.67 Vehicle-Mounted Elevating and Rotating Work Platform

(b) (4), Clearance From Power Lines

Outline No. II (Cont'd)

Subpart H - Hazardous Materials

(COMPRESSED GASES)

1910.103 Hydrogen

(b) Gaseous Hydrogen Systems
(3), Design Consideration at Specific Locations
(i) Outdoor Locations - within 15'
Subpart S applies
(ii) Separate buildings
(e) Class I Div. 2 location
(iii) Special rooms
(e) Class I Div. 2 location

(c) Liquified Hydrogen Systems
(1), Design
(ix) Electrical Systems Class I Div. 1 & 2 locations
(x) Bonding & grounding required
(3), Design Considerations at Specific Locations
(i) (ii) (iii) Classified locations

1910.104 Oxygen

(b) (3), Equipment Assembly and Installation
(ix) Wiring - not a hazardous location

(SEE NUMBER III OUTLINE FOR SUBPART H CONTINUATION)

Subpart J - General Environmental Controls

1910.145 Specifications for Accident Prevention Signs and Tags

(f) Accident Prevention Tags
(1), Scope & Purpose
(i) Tags are a temporary warning, until the switch can be locked out.

Subpart L - Fire Protection

1910.157 Portable Fire Extinguishers

(b) (2) Suitable types for electrical fires (Class C)

1910.165 Employee Alarm Systems
General Requirements

OUTLINE NO. III

HAZARDOUS LOCATIONS UNDER OSHA

Subpart H - Hazardous Materials (See Outline II for .103 thru .104)

1910.106 Flammable and Combustible Liquids

(GENERAL)

1910.106 (a) Definitions
(Shown in order of decreasing hazard)

(19) Flammable Liquids (Class I)
Flashpoint below 100°F.

	Flashpoint	Boiling Point
Class IA:	Below 73°F.	Below 100°F.
Class IB:	Below 73°F.	100°F. or above
Class IC:	73°F. or above	

(18) Combustible Liquids (Classes II & III)
Flashpoint 100°F. or above

	Flashpoint
Class II:	100°F. or above, but below 140°F.
Class IIIA:	140°F. or above, but below 200°F.
Class IIIB:	200°F. or above

(OCCUPANCIES)

1910.106 (e) Industrial Plants
(1), (2) & (3), Application, Usages, etc.
(3) (v), Ventilation Required
(4), Vehicle Loading & Unloading
(5), Fire Control
(6), Sources of Ignition
(ii) Grounding (static)
(7) Electrical
(i) (a) Subpart S applies
(b) Class I, Div. 1 locations
(c) Class I, Div. 2 locations (20 ft., etc.)
(d) Positive-pressure ventilation for room or enclosure.

1910.106 (f) Bulk Plants
(1) thru (4), General
(5), Electrical Equipment
(i) Applies to Class I liquids only
(ii) Subpart S applies
(iii) Classifications per Table H-18

1910.106 (g) Service Stations
(1) thru (2), General
(3), Dispensing Systems
(iii) Emergency power cutoff (remote).
(5), Electrical Equipment
(ii) Subpart S applies

1910.106 (h) Processing Plants
(1) thru (6), General
(7), Sources of Ignition (including electrical)
(iii) Electrical
(a) "...nationally-recognized good practice".
(c) Subpart S, Div. 2
(d) Positive-pressure ventilation for room or enclosure.

OPERATIONS)

1910.107 Spray Finishing Using Flammable and Combustible Materials
(a) Definitions (spraying area, spray booth, etc.)
(b) Spray Booths
(1) thru (9), General (ventilation, filters, sprinklers, etc.)
(10), Illumination
(c) Electrical and Other Sources of Ignition
(1) thru (3), General
(4), Subpart S Applies
(5), Combustible Residues
(6), Spraying Areas - Div. 1 & Div. 2 (20 ft.)
(7), Lamps - within 20 Ft., enclosed
(8), Portable Lamps - approved
(9), Grounding (spray booths, ducts, etc.)
(d) Ventilation (fans, motors)
(e) Storage and Handling of Liquids
(9), Grounding (static)
(h) Electrostatic Hand Spraying Equipment.
Control, grounding, interlocks required, etc.
(j) Drying, Curing or Fusion Apparatus.
Interlocking, alternate use, etc.
(k), (l), (m), (n), Automobile Undercoating, Powder Coating & Other Special Operations
Special requirements where explosive solvents may or may not be present, but other problems, such as explosive powder suspensions, may be present.

1910.108 Dip Tanks Containing Flammable or Combustible Liquids
(a) Definitions
(b) Ventilation, required, also interlocks
(c) Construction
(6), Conveyor Systems, interlocks required.
(e) Electrical and Other Sources of Ignition
(1), Vapor Areas
(i) Subpart S Applies, etc.
(ii) Deposits, etc.
(2), Adjacent Areas
No Sparking Devices (20 Ft.), and Subpart S applies
(h) Special Dip Tank Applications
(3), Electrostatic Apparatus

1910.109 Explosives and Blasting Agents

(c) Storage of Explosives

(2), (v) Heating

(d) & (e) Fans & Motors

(vi) Flashlights inside a magazine

(g) Blasting Agents

(2), (v) Switches etc.

Subpart S, Class II Div. 2 Requirements

(h) Water Gel Explosives and Blasting Agents

(3), (iv) (d) Subpart S

(e) Overload Relays, Grounding

(i) Ammonium Nitrate

(6), General Precautions

(i) Subpart S applies

(ii) Lightning protection

1910.110 Storage and Handling of Liquefied Petroleum Gases

(b) Basic Rules

(17), Electric and Other Sources of Ignition

(i) Subpart S applies

(18), Equipment in Classified Areas - shall comply with Table H-28

(d) Systems Other than Utilizing DOT Containers

(16), Lighting to conform to (b) (17) and (18)

(f) Storage of Containers

(5), (ix) Fixed Electrical Equipment to conform to (b) (18)

(h) Liquefied Petroleum Gas Service Stations

(13), (b) (17) and (18) apply

OUTLINE NO. IV

SOME SPECIFIC MACHINERY REQUIREMENTS UNDER OSHA

Subpart N - Materials Handling and Storage

1910.179 Overhead and Gantry Cranes
- (g) Electrical Equipment
  - (1), General
    - (i) thru (v), Control voltages, pendant controls, etc.
  - (2), Equipment
    - (i), (ii), (iii), Live parts, enclosures, guards
  - (3), Controllers
    - (i) thru (ix), Spring return, locations, etc.
  - (4), Resistors
    - Enclosures, etc.
  - (5), Switches
    - (i), (ii), (iii), Disconnects required, arrangements permitted
    - (iv), (v), Other switch requirements.
  - (6), Runway Conductors, shock hazard
  - (7), Extension Lamps, receptacles on or in a crane.

1910.180 Crawler Locomotive and Truck Cranes
- (j) Operations Near Electric Power Lines
  - (1) thru (4), Clearances, Guards, Notification, etc.

1910.181 Derricks
- (j) (5), Operating Near Electric Power Lines
  - (i) thru (iv) Clearances, Guards, Notification, etc.

Subpart O - Machine Guarding

1910.212 (a) Machine Guarding
- (1) thru (4), Point-of-Operation Guarding
- (5), Fan Blades, less than 7 ft. above floor.
- (b) Anchoring Fixed Machinery

1910.213 Woodworking Machinery Requirements
- (a) (11), Grounding - Portable woodworking machinery and hand-held tools shall be grounded.
- (b) Machine Controls and Equipment
  - (1), Power Control, required at point of operation.
  - (3), No Automatic Restart, after power failure
  - (4), Control Locations
  - (5), Means for Rendering Controls Inoperative for Repairs

1910.216 Mills and Calenders in the Rubber and Plastics Industries

Safety trip controls, emergency stops.

1910.217 Mechanical Power Presses
- (b) (8), Electrical
  - (i) thru (vi) Disconnect switch, controls, no automatic automatic re-start after power failure, etc.

Subpart P- Hand and Portable Powered Tools and Other Hand-Held Equipment

1910.243 Guarding of Portable Powered Tools

(a) (2), "Dead-man" Controls

(5), Grounding. For portable woodworking machinery see Subpart O, 1910.213 (a) (11). (Requires grounding).

Subpart Q - Welding, Cutting, and Brazing

1910.252 Oxygen-fuel Gas Systems for Welding and Cutting

(a) (6) (vi) (d) & (e) Generator rooms for acetylene, usually Class I, Group B, Div. 2 locations.

(b) Arc Welding and Cutting

(2), Application

(iii) Voltage - Maximum open-circuit voltages permitted

(iv) Design of equipment - protective devices, controls terminals, etc.

(3), Installation of Arc Welding Equipment

(i) Subpart S applies

(ii) Grounding

(a) Frame of machine

(b) Conduits not to be used as work-lead return. Pipelines may be used only under certain conditions.

(c) Chains etc. not to be used as work-lead return.

(d) Structure, etc., used as a welding current return only under certain conditions.

(e) Ground connections to be checked.

(iii) Supply connection and conductors

(a) Provide disconnect switch with overload protection for each machine. Provide disconnect switch with overload protection for each outlet intended for connection to a portable welding machine.

(b) Supply conductors adequate capacity.

(c) For groups of welders demand factor may be applicable.

(d) Several welders on one structure may produce as much as 2 times normal voltage. Prevent this by proper primary connections.

(4), Operations and Maintenance

(viii) Electrical shock - No splices within 10 ft. of the electrode holder.

(ix) Maintenance

(c) Replace work cables with damaged insulation.

(c) Resistance Welding Equipment

(1), General

(i) thru (iv) Qualified electricians, disconnect, protective controls, etc.

(2), Spot and Seam Welding Machines

(i) thru (ix) Maximum voltages; controls, interlocks, grounding, etc.

(3), Portable Welding Machines

(vi) Grounding.

OUTLINE NO. V

SPECIAL INDUSTRIES UNDER OSHA

Subpart R - Special Industries

1910.261 Pulp, Paper, and Paperboard Mills

(a) General Requirements

(3), General Incorporation of Standards

(i) Practice for Industrial Lighting, ANSI #A11.1 (1970)

(4), (ii) Building Exits Code for Life Safety from Fire, NFPA 101-1970

(b) Safe Practices

(4), Lockout, required

(7), Emergency Lighting, required

1910.263 Bakery Equipment

(c) General Machine Guarding

(1), Electrical Grounding, required.

1910.265 Sawmills

(c) (9), Lighting

(i) & (ii) Must be adequate and effective

(12), Electrical Wiring and Equipment

(i) Subpart S Requirements

(ii) Qualified personnel for Repairs

(iii) thru (vi) Miscellaneous precautions

(vii) Overload relays shall be reset by authorized persons only.

(viii) & (ix) Miscellaneous precautions

1910.268 Telecommunications (added 4-24-76)

(b) General

(1), Building

(i) Illumination

(7), Energized Lines and Parts

(d) Employee Protection

(2), (3), Protection from Energized Parts

(l) Personal Protection

(5), Portable power equipment - portable 120 volt generators may not require grounding.

(6), Vehicle-mounted generators - may not require grounding

(7), Portable lights, tools & appliances - May not require grounding

(8), Soldering devices, not grounded

(9), Lead Work - solder pots, etc. may require grounding

(m) Grounding and Overhead Lines

(n) (1), (10), (11), (12) & (13), Shock precautions

(o) Underground Lines

(3), Joint power & telecommunications manholes - energized cables.

(q) Tree Trimming-Electrical Hazards

OUTLINE NO. VI

CONSTRUCTION SAFETY UNDER OSHA

Part C - General Safety and Health Provisions

1926.25 Housekeeping
- (a) Scrap Lumber, Protruding Nails, Debris
- (b) Combustible Scrap

1926.26 Illumination
- Construction areas, aisles, stairs etc.
- See Subpart D (1926.56)

Subpart D - Occupational Health and Environmental Controls

1926.56 Illumination
- (a) Table D-3 - Minimum Illumination Intensities

Subpart F - Fire Protection and Prevention

1926.150 Fire Protection
- (c) (1) (x) Table F-1 Extinguishers
  - suitable for electrical fires. (Class C)
- (e) Fire Alarms

1926.152 Flammable and Combustible Liquids
- (b) Indoor Storage
  - (3), Storage areas
  - (4), Storage rooms
    - (v) Class I, Div. 1 Location
    - (vi) Ventilation (either gravity or mechanical) required. Mechanical exhaust system and lights controlled by a switch outside the door.
- (c) Storage Outside Buildings
  - Separation; spacing from buildings (20 ft.)

Subpart I - Tools - Hand and Power

1926.300 General Requirements
- (d) Switches
  - (1), (2), (3), "On-off" control or momentary contact only.

1926.302 Power-Operated Hand Tools
- (a) Electric Power-Operated Tools
  - (1), Either double-insulated or grounded as per Subpart K
  - (2), Use of cords for hoisting or lowering tools not permitted.

1926.304 Woodworking Tools (fixed)
- (a) Disconnect Switch (which can either be locked or tagged.)

Subpart J - Welding and Cutting

.351 Arc Welding and Cutting
- (a) Manual Electrode Holders
  - (1), (2), Designed for the purpose, insulated

(b) Welding Cables and Connectors

(1), (2), (3), (4), Insulated, flexible, capacity, splices, repairs

(c) Ground Returns and Machine Grounding
(1), Ground return cable, capacity.
(2), (3), (4), Structures or pipelines used as ground return .....(some not permitted).
(5), Frames of welding & cutting machines, to be grounded.

(d) Operating Instructions. Employers shall instruct employees in safe practices.
(5), Other requirements of Art. 630 N.E.C. when applicable.

Subpart K - Electrical (Completely Revised October 1986)

General

1926.400 Introduction
1926.401 (Reserved)

Installation Safety Requirements

1926.402 Applicability
1926.403 General requirements
1926.404 Wiring design and protection
1926.405 Wiring methods, components, and equipment for general use
1926.406 Specific purpose equipment and installations
1926.407 Hazardous (classified) locations
1926.408 Special systems
1926.409 - 1926.415 (Reserved)

Safety Related Work Practices

1926.416 General requirements
1926.417 Lockout and tagging of circuits
1926.418 - 1926.430 (Reserved)

Safety Related Maintenance and Environmental Considerations

1926.431 Maintenance of equipment. — Equipment in hazardous locations
1926.432 Environmental deterioration of equipment
1926.433 - 1926.440 (Reserved)

Safety Requirements for Special Equipment

1926.441 Battery locations and battery charging
1926.442 - 1926.448 (Reserved)

Definitions

1926.449 Definitions applicable to this subpart

Subpart L - Ladders and Scaffolding

1926.450 Ladders
(a) General Requirements

OUTLINE NO. VI (CONT'D)

(11), Portable Metal Ladders - not to be used for electrical work or where they may contact electrical conductors.

Subpart N - Cranes, Derricks, Hoists, Elevators, and Conveyors

1926.550 Cranes and Derricks
(a) General Requirements
(15) (i) thru (viii), Requirements for operation in proximity of electrical lines

1926.555 Conveyors
(a) General Requirements
(1) thru (8), Controls, warning signals, emergency stop switches, etc.

Subpart V - Power Transmission and Distribution

1926.950 General Requirements
(a) Application. These standards apply to the construction of electrical transmission and distribution lines and equipment.
(1), Includes Erection, Alteration, etc.
(b) Initial Inspections, Tests, or Determinations
(1), (2) & (3), Existing Conditions, etc, to be Determined Before Starting Work.
(c) Clearances
(1), Working Clearances, in Table V-1; and guarding/insulating precautions.
(2), Minimum clear Hot-Stick Distances, per Table V-1
(d) De-energizing Lines and Equipment
(1), When Disconnecting Means is Not Visibly Open.
(2), When the Crew Can Clearly See the Disconnecting Means Open.
(e) Emergency Procedures and First Aid
Training Required.
(f) Night Work
Lighting required
(g) Work Near and Over Water
Protection required per 1926.104, 1926.105 or 1926.106.

1926.951 Tools and Protective Equipment
(a) thru (f) Requirements for Protective Equipment (blankets, gloves, etc.), Climbing Equipment, Ladders, Live Line Tools, Measuring Tapes, & Handtools

1926.954 Grounding for Protection of Employees
(a) General All conductors and equipment shall be treated as energized until tested or otherwise determined to be deenergized or until grounded.
(b) thru (j) Precautions & Procedures

.955 Overhead Lines
(a) Overhead Lines
Protection against shock hazards, climbing hazards.

(b) Metal Tower Construction
Protection against footing, excavation accidents, falls, energized conductors, etc.
(c) Stringing or Removing Deenergized Conductors
Protection against accidental contact with energized lines, etc.
(d) Stringing Adjacent to Energized Lines
(e) Live-Line Bare-Hand Work
Special techniques and precautions

1926.956 Underground Lines
(a) Guarding and Ventilating Access Openings
(b) Work in Manholes
(c) Trenching and Excavating
Prevent dig-ins, etc.

1926.957 Construction in Energized Substations
(a) Work Near Energized Equipment Facilities
(b) Deenergized Equipment or Lines
(c) Barricades and Barriers
(d) Control Panels
(e) Mechanized Equipment
(g) Substation Fences
Temporary during construction, must be maintained

1926.958 External-Load Helicopters
1926.551 applies

1926.959 Lineman's Body Belts, Safety Straps, and Lanyards
Specifications, tests, etc.

GFCI REQUIREMENTS FOR CONSTRUCTION SITES

Employer Must Select From ONE of the Following TWO OPTIONS

These options are in addition
to any other requirements for
Equipment Grounding Conductors
(See 1910.304(b)(1)
or 1926.400(h)(1)

OPTION ONE

1926.404(b)(1)(ii)

(b)(1)(i) Ground-fault circuit interrupters. All 120-volt, single-phase, 15- and 20-ampere receptacle outlets on construction sites which are not a part of the permanent wiring of the building or structure and which are in use by employees, shall have approved ground-fault circuit interrupters for personnel protection. Receptacles on a two-wire, single-phase portable or vehicle-mounted generator rated not more than 5kW, where the circuit conductors of the generator are insulated from the generator frame and all other grounded surfaces, need not be protected with ground-fault circuit interrupters.

One

Two

Three

Visual Inspections Before Each Day's Use.
(Does not require recording or testing)

OPTION TWO

1926.404(b)(1)(iii)

(b)(1)(ii) Assured equipment grounding conductor program. The employer shall establish and implement an assured equipment grounding conductor program on construction sites covering all cord sets, receptacles which are not a part of the permanent wiring of the building or structure, and equipment connected by cord and plug, which are available for use or used by employees. This program shall comply with the following minimum requirements:

(b)(1)(iii)(A) A written description of the program, including the specific procedures adopted by the employer, shall be available at the job-site for inspection and copying by the Assistant Secretary and any affected employee.

(b)(1)(iii)(B) The employer shall designate one or more competent persons (as defined in 29 CFR 1926.32(f) to implement the program.

(b)(1)(iii)(C) Each cord set attachment cap, plug and receptacle of cord sets, and any equipment connected by cord and plug except cord sets and receptacles which are fixed and not exposed to damage, shall be visually inspected before each day's use for external defects such as deformed or missing pins or insulation damage, and for indication and for indication of possible internal damage. Equipment found damaged or defective may not be used until repaired.

PREPARED
July/1987

TESTING

The Test

1926.404(b)(1)(iii)(D)

(D) The following tests shall be performed on all cord sets, receptacles which are not a part of the permanent wiring of the building or structure and cord-and plug-connected equipment required to be grounded:

(1) All equipment grounding conductors shall be tested for continuity and shall be electrically continuous.

(2) Each receptacle and attachment cap or plug shall be tested for current attachment of the equipment grounding conductor. The equipment grounding conductor shall be connected to its proper terminal.

When

1926.404(b)(1)(iii)(E)

(E) All required tests shall be performed:

(1) Before first use:

(2) Before equipment is returned to service following any repairs:

(3) Before equipment is used after any incident which can be reasonably suspected to have caused damage (for example, when a cord set is run over); and

(4) At intervals not to exceed 3 months, except that cord sets and receptacles which are fixed and not exposed to damage shall be tested at intervals not exceeding 6 months.

(F) The employer may not make available or permit the use by employees of any equipment which has not met the requirements of this paragraph (b)(1)(ii) of this section.

Recording

1926.404(b)(1)(iii)(G)

(G) Tests performed as required in this paragraph shall be recorded. This test record shall identify each receptacle, cord set, and cord-and plug-connected equipment that passed the test, and shall indicate the last date it was tested or the interval for which it was tested. This record shall be kept by means of logs, color coding, or other effective means, and shall be maintained until replaced by a more current record. The record shall be made available on the jobsite for inspection by the Assistant Secretary and affected employee.

PREPARED
7/87

HAZARDOUS LOCATION ELECTRICAL REQUIREMENTS

IN OSHA STANDARDS

Page

1910.103 HYDROGEN

(b) Gaseous Hydrogen Systems
(3) Design Considerations at Specific Locations
(i) Outdoor locations
(c) ..within 15 feet, Subpart 'S' applies
(ii) Separate buildings
(e) Class I Division 2 location
(iii) Special rooms
(e) Class I Division 2 location

(c) Liquified Hudrogen Systems
(1) Design
(ix) Electrical systems - Class I Division 1 and 2 locations
(3) Design considerations at Specific Locations
(i) Outdoor locations
(d) Classified locations
(ii) Separate buildings
(d) Classified locations
(iii) Special rooms
(e) Classified locations

1910.104 OXYGEN

(b) Bulk Oxygen Systems
(8) Equipment assembly and installation
(ix) Electrical wiring - not hazardous location as defined and covered in Subpart 'S'

1910.106 FLAMMABLE AND COMBUSTIBLE LIQUIDS

(b) Tank Storage
(6) Sources of ignition - ...precautions shall be taken to eliminate or control...

(d) Container and Portable Tank Storage
(4) Design and construction of inside storage rooms
(iii) Wiring - Class I liquids-Class I Division 2 location (Class II and/or Class III liquids-approved for general use)

(e) Industrial Plants
(7) Electrical
(i) Equipment
(a) ...installed in accordance with Subpart S...
(b) Class I Division 1 locations
(c) Class I liquids - Class I Division 2 locations
(d) Positive-pressure ventilation for room or enclosure

(f) Bulk Plants
(5) Electrical equipment
(i) Class I liquids only (Class II and/or III liquids-ordinary equipment)
(ii) ...installed in accordance with Subpart S...
(iii) Classifications of locations per Table H-18

(g) Service Stations
(5) Electrical equipment
(i) Class I liquids only (Class II and/or III-ordinary quipment
(ii) ...installed in accordance with Subpart S...
(iii) Classification of locations per Table H-19

(h) Processing Plants
(7) Sources of ignition
(iii) Electrical
(a) ...nationally-recognized good practice...
(b) Class I, Division 1 locations
(c) Class I, Division 2 locations
(d) Positive-pressure ventilation for room or enclosure

Page

1910.107 SPRAY FINISHING USING FLAMMABLE & COMBUSTIBLE LIQUIDS

(c) Electrical and Other Sources of Ignition
(4) Wiring conformance-...in accordance with Subpart S...
(5) Combustible residue areas-restrictions
(6) Wiring type approved - Class I Division 1 and 2 locations*
(7) Lamps - within 20 feet*-enclosed
(8) Portable lamps - during cleaning & repairing approved

(k) Automobile undercoating in garages -if flammable must meet (c)

(l) Powder Coating
(1) Electrical and other sources of ignition - must conform to (c)(1) (i)-(iv),(8) and (9)(i) and Subpart S

1910.108 DIP TANKS CONTAINING FLAMMABLE & COMBUSTIBLE LIQUIDS

(e) Electrical and other sources of ignition
(1) Vapor areas
(i) Class I Division 1 locations
(ii) Locations with both deposits of readily ignitable residues and explosive vapors-restrictions
(2) Adjacent areas - floorspace within 20 feet - Class I Division locations

1910.109 EXPLOSIVES AND BLASTING AGENTS

(b)(1) for Fireworks Mfg. only-see directive
(c) Storage of explosives
(2) Construction of magazines-general
(v) Magazine heating systems
(d) Electric fan or pump mounted outside, seperate from wall
(e) Overloads and disconnects per Subpart S, and switchgear 25 feet distance

(g) Blasting Agents
(2) Fixed location mixing
(v) Class II Division 2 - in mixing room

* See FOM guidance for De Minimus Violations

CONSTRUCTION

Page

1926.152 FLAMMABLE AND COMBUSTIBLE LIQUIDS

(b) Indoor storage of flammable and combustible liquids
(4) Inside storage rooms
(v) Class I Division locations

1926.404 HAZARDOUS LOCATIONS

(b) Shall be listed by nationally-recognized testing lab except custom-made equipment

(c) Approved for correct Class

(d) All equipment and components maintained per approval

HAZARDOUS LOCATION BASICS

To do the job safely—you need the facts on the various types of Hazardous Locati

CLASSES	DIVISIONS	GROUPS
Class I Gas	1 Normal	ABCD
Class II Dust		
Class III Fibers	2 Abnormal	EFG

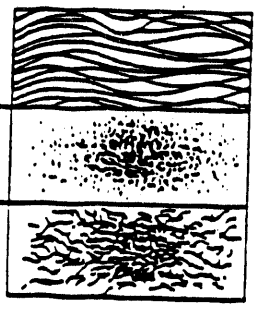

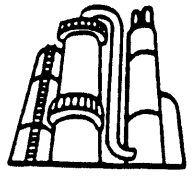

Definitions*

HAZARDOUS LOCATION—An area where the possibility of explosion and fire is created by the presence of flammable gases, vapors, dusts, fibers or flyings.

CLASS I (NEC-500-4)—Those areas in which flammable gases or vapors may be present in the air in sufficient quantities to be explosive or ignitable.

CLASS II (NEC-500-5)—Those areas made hazardous by the presence of combustible dust.

CLASS III (NEC-500-6)—Those areas in which there are easily ignitable fibers or flyings present, due to type of material being handled, stored, or processed.

DIVISION 1 (NEC-500-4, 5, 6)—**Division One in the normal situation**, the hazard would be **expected** to be present in everyday production operations or during frequent repair and maintenance activity.

DIVISION 2 (NEC-500-4, 5, 6)—**Division Two in the abnormal situation**, material is expected to be confined within closed containers or closed systems and will be present only through accidental rupture, breakage or unusual faulty operation.

GROUPS (NEC-500-2 & 502-1)—The gases and vapors of Class I locations are broken into four groups by the code. A, B, C and D. These materials are grouped according to... the ignition temperature of the substance, its explosion pressure and other flammable characteristics.

Class II—dust locations—groups E, F and G. These groups are classified according to the **ignition temperature** and the **conductivity** of the hazardous substance.

SEALS (NEC-501-5 & 502-5)—Special fittings that are required either to prevent the passage of hot gases in the case of an explosion in a Class I area or the passage of combustible dust, fibers, or flyings in a Class II or III area.

ARTICLES 500 Through 503 (1978 NEC)—Explains in detail the requirements for the installation of wiring or electrical equipment in hazardous locations. These articles along with other applicable regulations; local governing inspection authorities, insurance representatives, and qualified engineering/technical assistance should be your guides to the installation of wiring or electrical equipment in any hazardous or potentially hazardous location.

*These are simplified definitions—complete data available in the referenced 1978 N E C article

Typical Class I locations:

- Petroleum refineries, and gasoline storage dispensing areas.
- Industrial firms that use flammable liquids i dip tanks for parts cleaning or other operat
- Petrochemical companies that manufacture chemicals from gas and oil.
- Dry cleaning plants where vapors from clea fluids can be present.
- Companies that have spraying areas where coat products with paint or plastics
- Aircraft hangars and fuel servicing areas.
- Utility gas plants, and operations involving storage and handling of liquified petroleum or natural gas.

Typical Class II locations:

- Grain elevators, flour and feed mills.
- Plants that manufacture, use or store magnesium or aluminum powders.
- Plants that have chemical or metallurgical processes...producers of plastics, medicine and fireworks, etc.
- Producers of starch or candies.
- Spice-grinding plants, sugar plants and coc plants.
- Coal preparation plants and other carbon-handling or processing areas.

Typical Class III locations:

- Textile mills, cotton gins, cotton seed mills a flax processing plants.
- Any plant that shapes, pulverizes or cuts wo and creates sawdust or flyings.

Note: fibers and flyings are not likely to be suspended in the air, but can collect around machinery or on lighting fixtures and where heat, a spark or hot metal can ignite them.

Hazardous Locations

Hazardous locations are those areas where a potential for explosion and fire exist because of flammable gases, vapors or finely pulverized dusts in the atmosphere, or because of the presence of easily ignitable fibers or flyings. Hazardous locations may result from the normal processing of certain volatile chemicals, gases, grains etc., or it may result from accidental failure of storage systems for these materials. It is also possible that a hazardous location may be created when volatile solvents or fluids, used in a normal maintenance routine, vaporize to form an explosive atmosphere.

Regardless of the cause of a hazardous location it is necessary that every precaution be taken to guard against ignition of the atmosphere. Certainly no open flames would be permitted in these locations, but what about other sources of ignition?

Electrical Sources of Ignition

A source of ignition is simply the energy required to touch off an explosion in a hazardous location atmosphere.

Electrical equipment can be a source of this ignition energy. The normal operation of switches, circuit breakers, motor starters, contactors and plugs and receptacles release this energy in the form of arcs and sparks as contacts open and close; making and breaking circuits.

Electrical equipment such as lighting fixtures and motors are classified as "heat producing" and they will become a source of ignition if they reach a surface temperature which exceeds the ignition temperature of the particular gas, vapor or dust in the atmosphere.

It is also possible that an abnormality or failure in an electrical system could provide a source of ignition. A loose termination in a splice box or a loose lamp in a socket can be the source of both arcing and heat. The failure of insulation from cuts, nicks aging can also act as an ignition source again fro sparking, arcing and heat.

Hazardous Locations and the National Electrical Code

The National Electrical Code treats installations hazardous locations in articles 500 through 516.

Each hazardous location can be classified by th definitions in the NEC, and following are interpreta tions of these classifications and applications.

Class I Locations

Class I locations are those in which flam gases or vapors are or may be present in the quantities sufficient to produce explosive or ignita mixtures.

Class I, Division 1

These are Class I locations where the hazar ous atmosphere is expected to be present du ing normal operations. It may be present cor tinuously, intermittently, periodically or durin normal repair or maintenance operations. Div sion 1 locations are also those locations wher a breakdown in the operation of processin equipment results in the release of hazardou vapors and the simultaneous failure of electric equipment.

Class I, Division 2

These are Class I locations in which volatil flammable liquids or gases are handled, proc essed or used, but in which they will normall be confined within closed containers or close systems from which they can escape only in th case of accidental rupture or breakdown of th containers or systems. The hazardous con tions will occur only under abnormal condit

Hazardous Locations

Class II Locations

Class II locations are those that are hazardous because of the presence of combustible dust.

Class II, Division 1

These are Class II locations where combustible dust may be in suspension in the air under normal conditions in sufficient quantities to produce explosive or ignitable mixtures. This may occur continuously, intermittently or periodically. Division 1 locations also exist where failure or malfunction of machinery or equipment might cause a hazardous location to exist while providing a source of ignition with the simultaneous failure of electrical equipment. Included also, are locations in which combustible dust of an electrically conductive nature may be present.

Class II, Division 2

A Class II, Division 2 location is one in which combustible dust will not normally be in suspension in the air and normal operations will not put the dust in suspension, but where accumulation of the dust may interfere with the safe dissipation of heat from electrical equipment or where accumulations near electrical equipment may be ignited by arcs, sparks or burning material from the equipment.

Class III Locations

Class III locations are those that are hazardous because of the presence of easily ignitable fibers or flyings, but in which the fibers or flyings are not likely to be in suspension in the air in quantities sufficient to produce ignitable mixtures.

Class III, Division 1

These are locations in which easily ignitable fibers or materials producing combustible flyings are handled, manufactured or used.

Class III, Division 2

These locations are where easily ignitable fibers are stored or handled.

Equipment for Hazardous Locations

Equipment for Class I Locations

Devices for Class I locations are housed in enclosures which are designed strong enough to contain an explosion if the hazardous vapors enter the enclosure and are ignited. These enclosures then cool and vent the products of combustion in such a way that the surrounding atmosphere is not ignited.

Heat producing equipment for hazardous locations, such as lighting fixtures, must not only contain the explosion and vent the cooled products of combustion but must also be designed to operate with surface temperatures below the ignition temperatures of the hazardous atmosphere.

Since the different vapors and gases making up hazardous atmospheres have varying properties, they have been placed in groups based on a common range of ignition temperatures and explosion pressures. These groups are designated A, B, C and D,

Hazardous Locations

and the equipment selected must be suitable for the group of the specific hazardous gas or vapor.

Reference to the National Electrical Code will indicate that much of the equipment used for Class I Division 2 applications is the same as that used for Division 1 applications. However, in certain instances, standard location equipment may be used for some of the Class I Division 2 applications if the appropriate restrictions are followed.

Equipment for Class II Locations

The enclosures used to house devices in Class II locations are designed to seal out dust. Contact between the hazardous atmosphere and the source of ignition has been eliminated and no explosion can occur within the enclosure.

As in Class I equipment, heat producing equipment must be designed to operate below the ignition temperature of the hazardous atmosphere. However, in Class II equipment, additional consideration must be given to the heat buildup which may result from the layer of dust which will settle on the equipment.

Dusts have also been placed in Groups designated E, F and G based on their particular hazardous characteristics. Again it is important to select equipment suitable for the specific hazardous group.

Flexibility, similar to that described for Class I Division 2 applications, is also permitted in the selection of equipment and wiring methods used for Class II Division 2 applications. The National Electrical Code contains the specific rules.

Equipment for Class III Locations

Class III locations require equipment which is designed to minimize the entrance of fibers and flyings, prevent the escape of sparks or burning material and operate at a temperature below the point of combustion.

Applications for Hazardous Location Equipment

Hazardous location equipment may be requirec any area where the presence of flammable ga: vapors or finely pulverized dusts in the atmospn is sufficient to create a threat of explosion or 1 It may also be required where easily ignitable fib or flyings are present. The following is a repres tative (but hardly complete) list of the types of lo tions and operations requiring hazardous loca equipment in at least certain areas:

Class I Locations

- Petroleum refining facilities
- Dip tanks containing flammable or combust liquids
- Dry cleaning plants
- Petrochemical plants
- Plants manufacturing organic coatings
- Spray finishing areas (residue must be considered)
- Petroleum dispensing areas
- Solvent extraction plants
- Plants manufacturing or using pyroxylin (nitrocellulose) type and other plastics. (Class II also)
- Locations where inhalation anesthetics are used
- Utility gas plants, operations involving stora and handling of liquified petroleum and natural gas
- Aircraft hangers and fuel servicing areas

Hazardous Locations

Class II Locations

- Grain elevators and bulk handling facilities
- Manufacture and storage of magnesium
- Manufacture and storage of starch
- Fireworks manufacture and storage
- Flour and feed mills
- Areas for packaging and handling of pulverized sugar and cocoa
- Facilities for the manufacture of magnesium and aluminum powder
- Coal preparation plants
- Spice grinding plants
- Confectionary manufacturing plants

Class III Locations

- Wood working plants
- Textile mills
- Cotton gins and cotton seed mills
- Flax producing plants

1910.307 - HAZARDOUS (CLASSIFIED) LOCATIONS

This section covers the requirements for electric equipment and wiring in locations which are classified depending on the properties of the flammable vapors, liquids or gases, or combustible dusts or fibers which may be present therein and the likelihood that a flammable combustible concentration or quantity is present. Hazardous (classified) locations may be found in occupancies such as, but not limited to, the following: aircraft hangars, gasoline dispensing and service stations, bulk storage plants for gasoline or other volatile flammable liquids, paint-finishing process plants, health care facilities, agricultural or other facilities where excessive combustible dusts may be present, marinas, boat yards, and petroleum and chemical processing plants. Each room, section or area shall be considered individually in determining its classification. These hazardous (classified) locations are assigned six designations as follows:

Class I, Division 1
Class I, Division 2
Class II, Division 1
Class II, Division 2
Class III, Division 1
Class III, Division 2

For definitions of these locations see 1910.399(a). All applicable requirements in this subpart shall apply to hazardous (classified) locations, unless modified by provisions of the section.

• The following discussion provides a general overview of the guidelines contained in the National Electrical Code, Chapter 5. Also, highlights and summary information are presented to aid in understanding design concepts and equipment selection. Several references are made to NEC Articles 500, 501, 502, and 503. Careful study of these and their associated articles should precede any design development activities.

Hazardous Locations

Hazardous locations are areas where flammable liquids, gases, or vapors, combustible dusts, or other easily ignitable materials exist in sufficient quantities to produce an explosion or fire. In hazardous locations, specially designed equipment and special installation techniques must be used to protect against the explosive and flammable potential of these substances.

Hazardous locations are classified as Class I, Class II, or Class III, depending on what type of hazardous substance is or may be present. In general, Class I locations are those in which flammable vapors and gases may be present. Class II locations are those in which combustible dusts may be found. Class III locations are those in which there are ignitable fibers and flyings.

Each of these classes is divided into two hazard categories, Division 1 and Division 2, depending on the likelihood of the presence of a flammable or ignitable concentration of a substance. Division 1 locations are designated as such because a flammable gas, vapor, dust or easily ignitable material is normally present in hazardous quantities. In Division 2 locations, the existence of hazardous quantities of these materials is not normal, but they may occasionally exist either accidentally or when material in storage is handled. In general, the installation requirements for Division 1 locations are more stringent than for Division 2 locations.

Additionally, Class I and Class II locations are also subdivided into groups of gases, vapors, and dusts having similar properties.

The table below summarizes the various hazardous (classified) locations. The definitions of the locations are given in paragraph 1910.399(a) of the standard.

SUMMARY OF CLASS I, II, III HAZARDOUS LOCATIONS

CLASSES	GROUPS	DIVISIONS 1	DIVISIONS 2
I Gases, vapors, and liquids (ART. 501)	A: Acetylene B: Hydrogen, etc. C: Ether, etc. D: Hydrocarbons, fuels, solvents, etc.	Normally explosive and hazardous	Not normally present in an explosive concentration (but may accidentally exist)
II Dusts (ART. 502)	E: Metal dusts (conductive* and explosive) F: Carbon dusts (some are conductive,* and all are explosive) G: Flour, starch, grain, combustible plastic or chemical dust (explosive)	Ignitable quantities of dust normally is or may be in suspension, or conductive dust may be present	Dust not normally suspended in an ignitable concentration (but may accidentally exist). Dust layers are present.
III Fibers and flyings (ART. 503)	Textiles, woodworking, etc. (easily ignitable, but not likely to be explosive)	Handled or used in manufacturing	Stored or handled in storage (exclusive of manufacturing)

*NOTE: Electrically conductive dusts are dusts with a resistivity less than 10^5 ohm-centimeter.
As of the 1984 NEC, combustible dusts are now separated into <u>two</u> different groups based on the electrical resistivity of the dusts: Groups E and G.

Because the explosion characteristics of hazardous substances vary with the specific material involved, each group requires special design considerations. For Class I hazardous locations, there are four groups - A, B, C, and D. See table below. Design characteristics for these four groups require the containment of maximum explosion pressure, maximum safe clearance between parts of enclosures - including threaded joints or joints that are ground to narrow tolerances - and operate at a temperature below the ignition temperature of the atmospheric mixture involved.

CHEMICALS BY GROUPS - CLASS I

GROUP A ATMOSPHERES:	Acetylene
GROUP B ATMOSPHERES:	Acrolein (inhibited), arsine, 1,3 butadiene, ethylene oxide, formaldehyde (gas), hydrogen, manufactured gases containing more than 30% hydrogen (by volume), propylene oxide, propyl nitrate
GROUP C ATMOSPHERES:	Acetaldehyde, allyl alcohol, n-butylaldehyde, carbon monoxide, crotonaldehyde, diethyl ether, diethylamine, epichlorohydrin, ethylene, ethylenamine, ethyl mercaptan, hydrogen sulfide, tetrahy-drofuran, unsymmetrical dimethyl hydrazine (UDMH 1, 1-dimethylhydrazine)
GROUP D ATMOSPHERES:	Acetone, acrylonitrile, ammonia, benzene, butane, 1-butanol (butyl alcohol), 2-butanol (secondary butyl alcohol), n-butyl acetate, isobutyl acetate, cyclopropane, di-isobutylene, ethane, ethanol (ethyl alcohol), ethyl acetate, ethyl acrylate (inhibited), ethylene dichloride, gasoline, heptanes, hexanes, isoprene, isopropyl ether, mesityl oxide, methane (natural gas), methanol (methyl alcohol), 3-methyl-1-butanol (isoamyl alcohol), methyl ethyl ketone, methyl isobutyl ketone, 2-methyl-1-propanol (isobutyl alcohol), 2-methyl-2-propanol (tertiary butyl alcohol), petroleum naphtha, pyridine, octanes, pentanes, 1-pentanol (amyl alcohol), propane, 1-propanol (propyl alcohol), 2-propanol (isopropyl alcohol), propylene, styrene, toluene, vinyl acetate, vinyl chloride, xylenes

SOURCE: 1984 NEC Handbook, pp. 625-627

other materials so that they present an explosion hazard, and having resistivity greater than 10^2 ohm-centimeter but equal to or less than 10^3 ohm-centimeter.

GROUP G ATMOSPHERES: Atmospheres containing flour, starch, grain dust, or combustible plastic or chemical dusts having resistivity greater than 10^8 ohm-centimeter.

Group F was eliminated by the 1984 NEC and the substances redistributed into Groups E and G based on resistivity. See the following Table for 1984 groups:

GROUP E ATMOSPHERES: Atmospheres containing combustible metal dusts regardless of resistivity, or other combustible dusts of similarly hazardous characteristics having resistivity of less than 10^5 ohm-centimeter.

GROUP G ATMOSPHERES: Atmospheres containing combustible dusts having resistivity of 10^5 ohm-centimeter or greater.

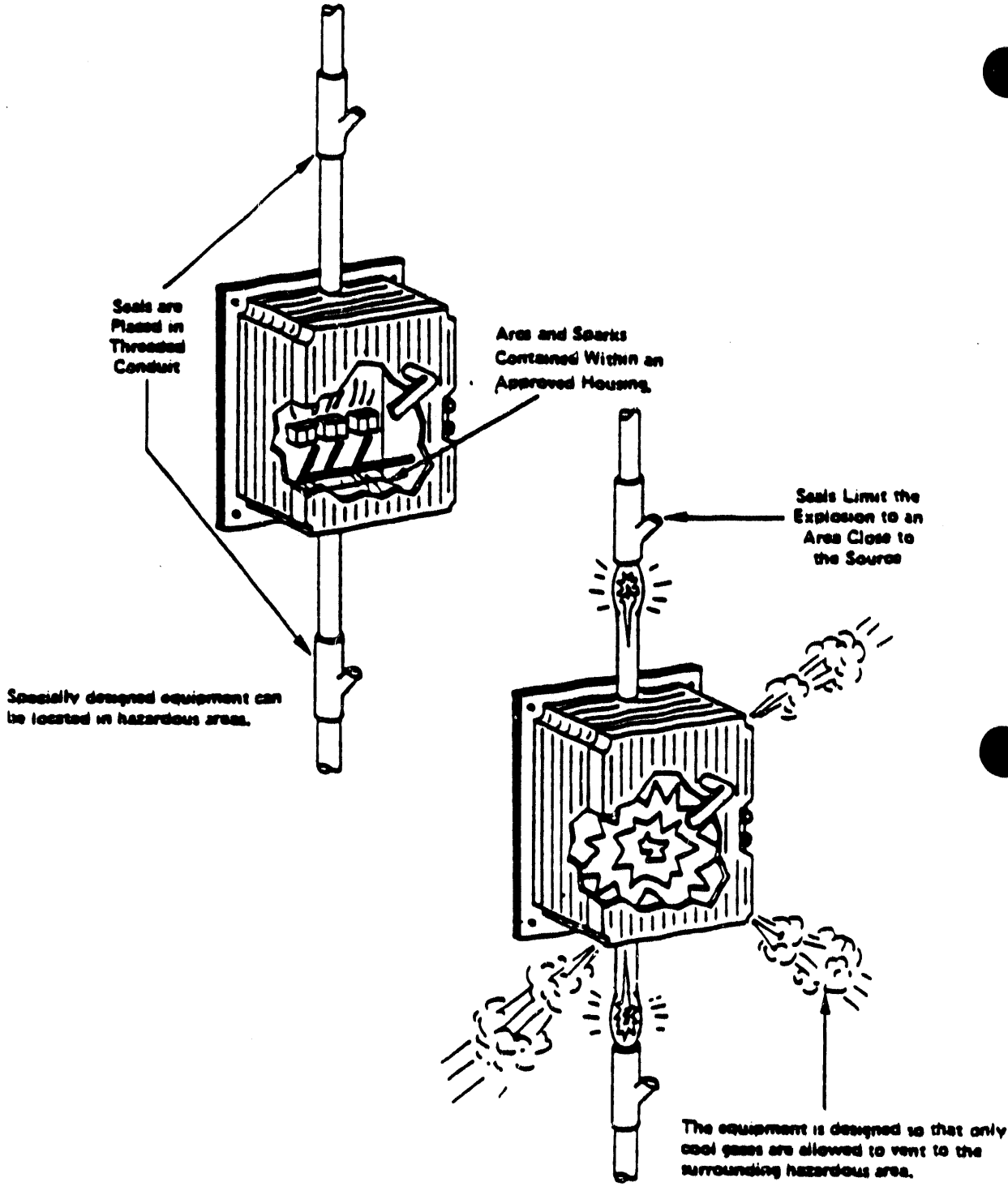

WHEN ARCS AND SPARKS CAUSE IGNITION OF FLAMMABLE GASES, VAPORS AND LIQUIDS, THE EQUIPMENT CONTAINS THE EXPLOSION AND VENTS ONLY COOL GASES INTO THE SURROUNDING HAZARDOUS AREA.

EXPLOSION OCCURRING IN APPROVED EQUIPMENT

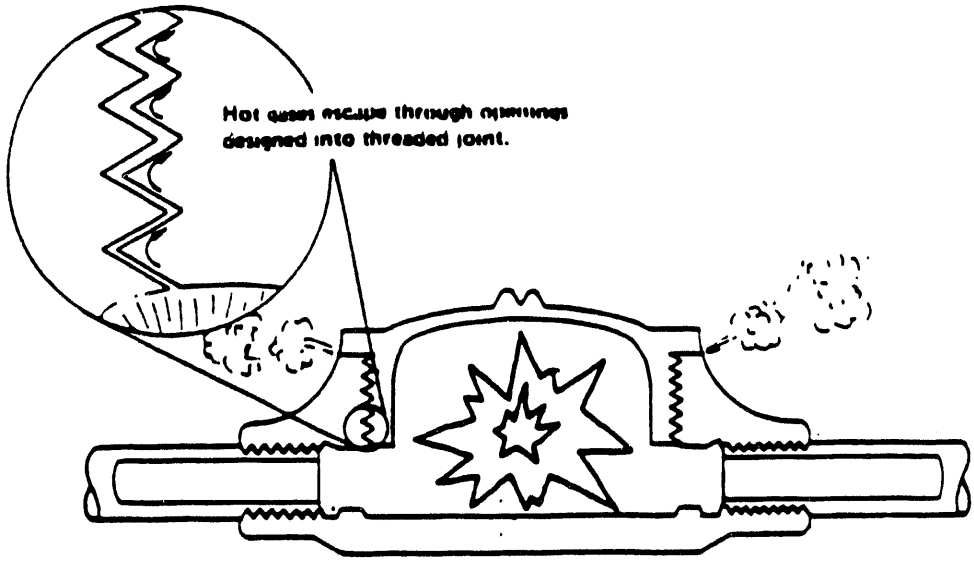

THE CASE OF THE ENCLOSURE IS MADE OF CAST METAL, STRONG ENOUGH TO WITHSTAND THE MAXIMUM EXPLOSION PRESSURE OF A SPECIFIC GROUP OF HAZARDOUS GASES OR VAPORS.

OPENINGS DESIGNED INTO THREADED JOINT

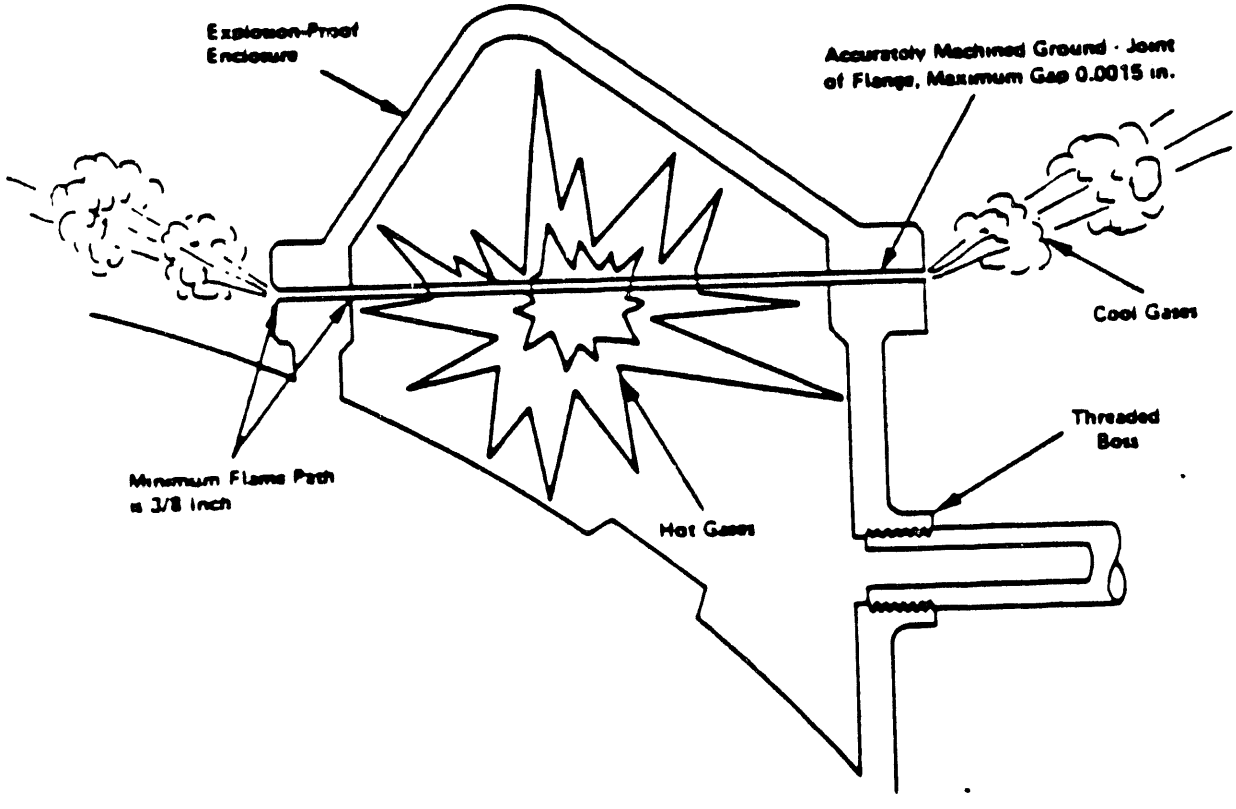

HOT BURNING GASES ARE COOLED AS THEY PASS THROUGH THE GROUND-JOINT OF FLANGES, DESIGNED WITHIN NARROW STANDARD TOLERANCES.

OPENINGS DESIGNED INTO GROUND JOINT

ELECTRICAL GLOSSARY

CONDUCTOR: A material through which an electric current can readily travel. Metals are good conductors. Copper and aluminum are very good conductors.

INSULATOR: A material through which an electric current does not readily pass. Some of the best insulators are polystyrene, mica, glass, and wood.

ELECTRIC CURRENT: The flow of electrons through a conductor.

DIRECT CURRENT (DC): The type of electric current in which the electrons move continuously in one direction through the conductor.

ALTERNATING CURRENT (AC): The type of electric current in which the movement of the electrons is to-and-fro in the conductor.

AMPERE: The unit for measuring the rate of flow of electricity.

VOLT: The unit for measuring the force that drives current through a circuit.

RESISTANCE: The opposition of a conductor to the flow of electrons due to "friction" inside of the conductor, measured in ohms (Ω).

REACTANCE (Magnetic): The opposition offered to the flow of an alternating current due to the changing magnetic field outside of the conductor, measured in ohms (Ω).

IMPEDANCE: The total opposition of a circuit to the flow of alternating current, measured in ohms (Ω).

PREDICTING ELECTRICAL ACTION

There are just a few basic rules which determine how electricity behaves and misbehaves, and even a person who has no electrical background can understand those rules. With this understanding one can more easily recognize and evaluate electrical hazards. Here is a step-by-step summary for original study and for occasional review. These fundamentals are simplified herein to provide only the information necessary to illustrate the electrical safety point involved.

1. **What is Electricity?**

All materials are made up of atoms having electrons held more or less firmly to a nucleus. If we can force electrons to move progressively through a material we have produced electricity. So electricity is very simply **a flow of electrons.**

Materials in which the electrons are easily moved are called **conductors.** (Examples: metals, water.) Materials in which the electrons are not easily moved are called non-conductors or **insulators.** (Examples: rubber, plastics, glass, air.) There are many materials which we must recognize as **fair conductors,** such as the human body, earth, concrete, etc.

2. **"AC" or "DC"?**

If the electrons move continuously in the same direction through the material, we call this action direct current (DC). If the current is continuously reversing at regular intervals we call this action alternating current (AC). Most of the current used in the workplace goes through a cycle (first in one direction, then in the reverse direction) 60 times per second, so we call that frequency "60 cycles per second, or 60 Hertz."

Whether AC or DC, **everything that electricity does is caused by this movement of electrons.** It's the movement that counts, not the direction.

In passing, it should be obvious that we are not talking about **static electricity,** in which electrons pile up because they can't move through non-conductive materials. Hazards from static electricity constitute an entirely different subject, which must be discussed separately.

But in the circuits we use for light, heat, motors, controls, etc., in the workplace, electric current is the flow of electrons. And **there will be no action, good or bad, unless current flows.**

The unit of measure for current is **amperes,** and the circuits most commonly used for lighting and receptacles are sized for a maximum of 15 or 20 amperes.

3. **Voltage forces electrons to move.**

Voltage is the force which can cause these electrons to move through a conductor. In the workplace we use voltage which is produced mainly by generators and transformers. It may be helpful to refer briefly to the top sketch of Diagram #1, which uses marbles in an analogy to illustrate how voltage forces electrons to flow through a circuit. Note that the paddle wheel, representing a generator, forces marbles (electrons) to flow through the tube, through the load, and back to the "generator." A generator, or a transformer acting like a generator, forces electrons to move out through a loop (circuit) in exactly the same manner.

The unit of measure for this "electromotive force" (voltage) is **volts**, and the most common voltages used in workplaces are: 115, 208, 230, 265 and 460 volts. It is important to know that these voltages cause a majority of the electrical fatalities.

4. **Current flow is impeded, more or less, in all circuits.**

When current flows through any conductor it must overcome **resistance**, which can be thought of as internal friction, just as the marbles (Diagram #1) must overcome friction in order to flow through the tube. This "friction" in a conductor tends to hold back the flow of current, just as it tends to slow down the marbles. And, in both cases, the friction produces heat.

In the electrical circuit, this resistance can be reduced by using larger size conductors (wire). If there are any places in the circuit where resistance is excessively high (loose connections, bad splices, etc.) the resulting concentrated heat will be destructive. This type of faulty wiring causes a majority of the electrical fires.

In addition to the resistance inside of the conductor, there is a magnetic effect outside of the conductor which impedes or holds back the flow of alternating current. This is called **magnetic reactance**, and, in combination with the resistance, becomes a factor in large industrial and commercial facilities. But if all conductors of a circuit are kept close together (as in the same cable or conduit), this magnetic reactance can usually be neglected. So for our purposes we can usually think of this **"impedance"** as resistance.

These impeding factors are measured in **ohms**.

5. **Now we can predict how much current will flow.**

Inasmuch as it is the current that causes the action (good or bad), it will be handy to be able to predict how much current will flow under some circumstances. This can be done by using **Ohm's Law**, which is one of the simplest laws in all nature. It states that:

$$\text{current (amperes)} = \frac{\text{voltage (volts)}}{\text{resistance (ohms)}}$$

It is easier to use this relationship if we use symbols for the quantities. So, if we use E for voltage, I for current, and R for resistance, then:

$$I \text{ (amps)} = \frac{E \text{ (volts)}}{R \text{ (ohms)}}$$

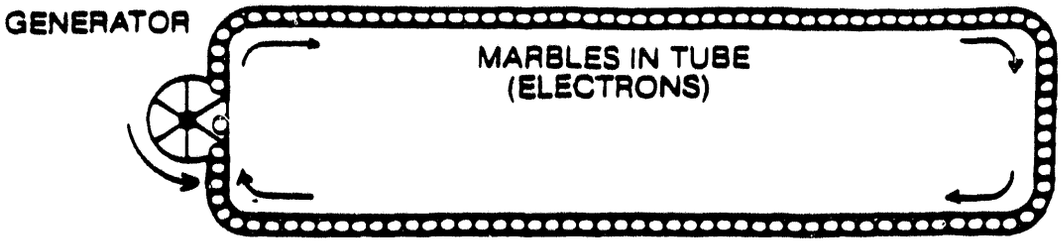

NO CURRENT FLOWS UNLESS THERE IS A COMPLETE LOOP. THE GENERATOR CANNOT FORCE ELECTRONS TO MOVE THRU THE TUBE UNLESS THEY ARE RETURNING TO THE GENERATOR.

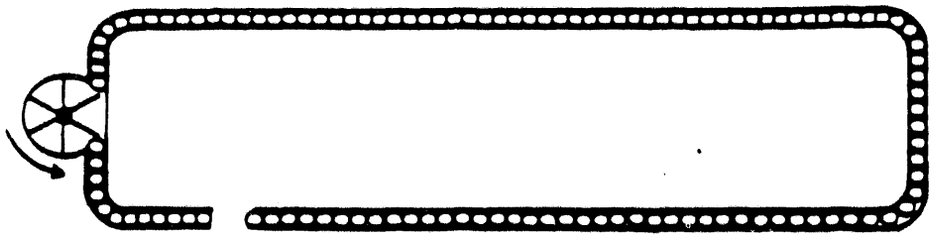

IF THE LOOP (CIRCUIT) IS NOT COMPLETE NO ELECTRONS CAN RETURN TO THE GENERATOR, THEREFORE ELECTRONS CEASE MOVING THRU THE CONDUCTOR.

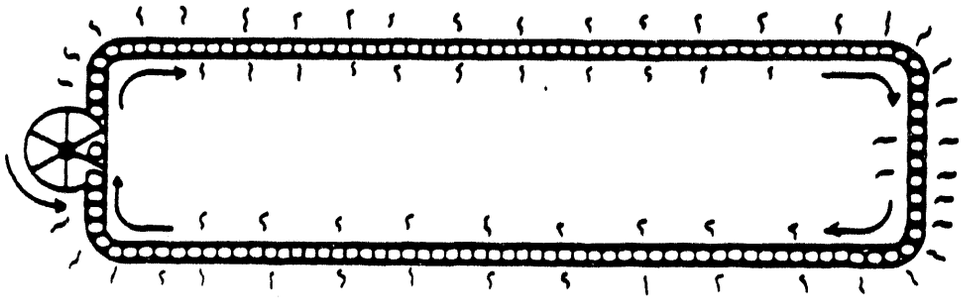

FRICTION (RESISTANCE) INSIDE OF A CONDUCTOR PRODUCES HEAT. THE MORE ELECTRONS PER SECOND THE MORE HEAT WILL BE PRODUCED.

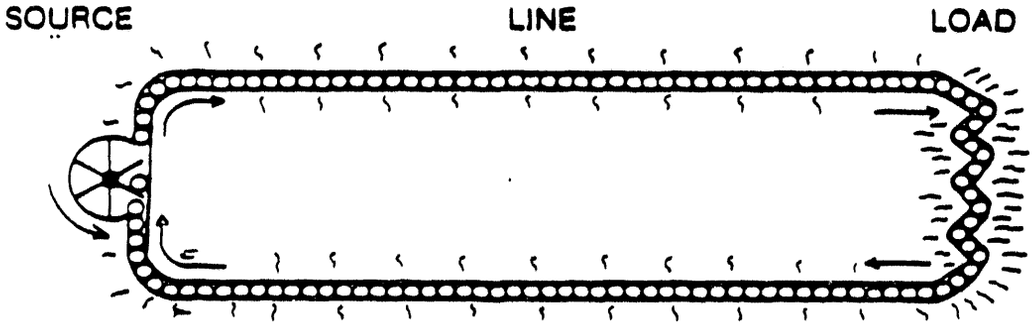

A WELL-DESIGNED SYSTEM HAS MINIMUM RESISTANCE IN LINES, SO THAT MAXIMUM EFFORT IS AVAILABLE TO PRODUCE USEFUL HEAT OR WORK IN THE LOAD.

DIAGRAM #1

ELECTRICAL FUNDAMENTALS ILLUSTRATED BY MARBLES MOVING THRU A TUBE

COMMON ELECTRICAL HAZARDS ARE SHOCKS, BURNS, EXPLOSIONS, FIRES

1. **Shocks** occur when current flows through some part or parts of the body. Results can be:

   a. Indirect (falling from ladders, scaffolds, etc.)

   b. Direct (damage or death actually caused by the flow of electricity through the body.)

2. **Burns** are usually caused by excessively hot electrical conductors (as in heaters or in faulty wiring) or by arc blast. Arc blast occurs from high-amperage currents arcing through the air after contact has initiated large current flow, as in "short circuits."

3. **Explosions** can be caused when electricity provides a source of ignition for an explosive mixture in the atmosphere. Excessively high conductor temperatures, or normal arcing (sparking) as at switch contacts, can provide this ignition source. "Explosion-proof" electrical installations can prevent such explosions.

4. **Fires** are most commonly caused by current flowing through high resistance due to faulty wiring, setting fire to insulation and surrounding materials. Defective or misused appliances and devices also cause many fires.

HOW SHOCKS CAUSE ACCIDENTS AND FATALITIES

1. **The worker may become part of a loop.**

   Electricity will follow any path which provides a loop **from a source of voltage and back to that source** (remember the marbles moving through the tube and back to the paddle wheel, Diagram #1). The electrons will follow **any and all paths** which will take them back to the source. The body may provide part of an unintended loop, either between the two conductors of a circuit, or between one of the conductors and "ground" (which usually completes the loop).

2. **How much current will flow through the worker?**

   When this happens some current will flow through the body, limited by the resistance of the path through the body. That resistance might be as high as 100,000 ohms if the skin is dry, but is more likely to be in the order of 1,000 ohms. **Wetness** at points of contact greatly reduces the resistance, allowing more current to flow, thus doing more damage.

   The amount of current can be predicted using Ohm's Law:

$$I \text{ (current)} = \frac{E \text{ (voltage)}}{R \text{ (resistance of body)}}$$

   For a very common situation:

$$I \text{ amps (A)} = \frac{115 \text{ volts (V)}}{1000 \text{ ohms } (\Omega)}$$

$$= 0.115 \text{ A}$$

This very small amount of current is quite likely to be lethal, and it can occur under very common workplace conditions.

3. **Effects of amount of current.**

(Note: Currents of less than 1 ampere are usually stated in milliamperes (mA), where 1 mA = 1/1000 of an ampere.)

More than 3 mA — painful shock which can cause indirect accidents.

More than 10 mA — muscle contraction, "no-let-go" danger.

More than 30 mA — lung paralysis, usually temporary.

More than 50 mA — possible ventricular fibrillation (heart disfunction, usually fatal).

100 mA to 4 A — certain ventricular fibrillation, fatal.

Over 4 A — heart paralysis but may be temporary; severe burns.
(Usually caused by voltages above 600 V.)

A large majority of the electrocutions are caused by voltages of less than 600 V, which are the voltages most common in the workplace. At voltages as low as 115 volts, fibrillation can start in 3 or 4 seconds of current flow. The higher the voltage the shorter the time before fibrillation starts.

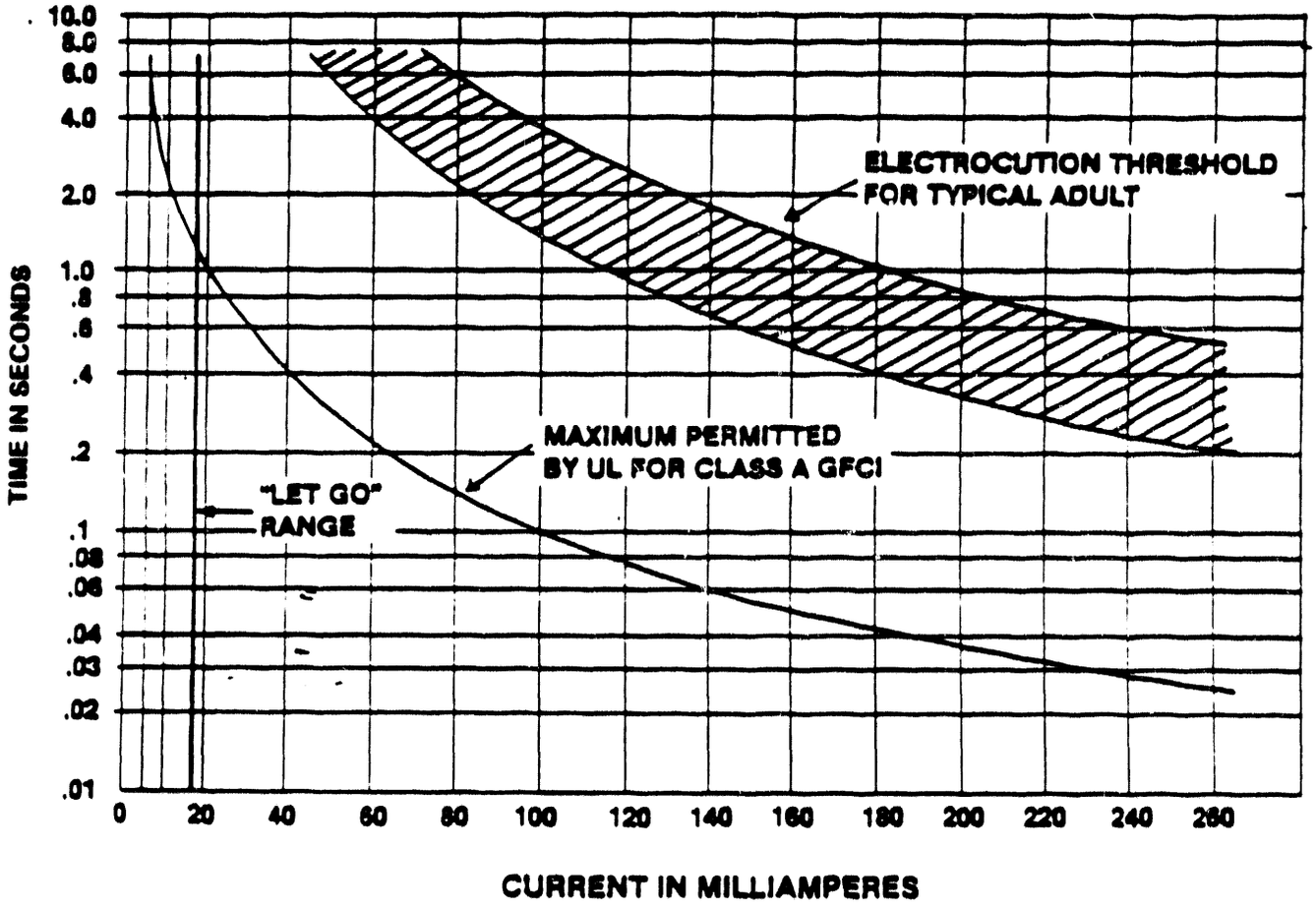

The effects of electrical current and time on the human body.

COMMON WORKPLACE CIRCUITS

Following is a simplified description of typical circuits to which workers are most commonly exposed.

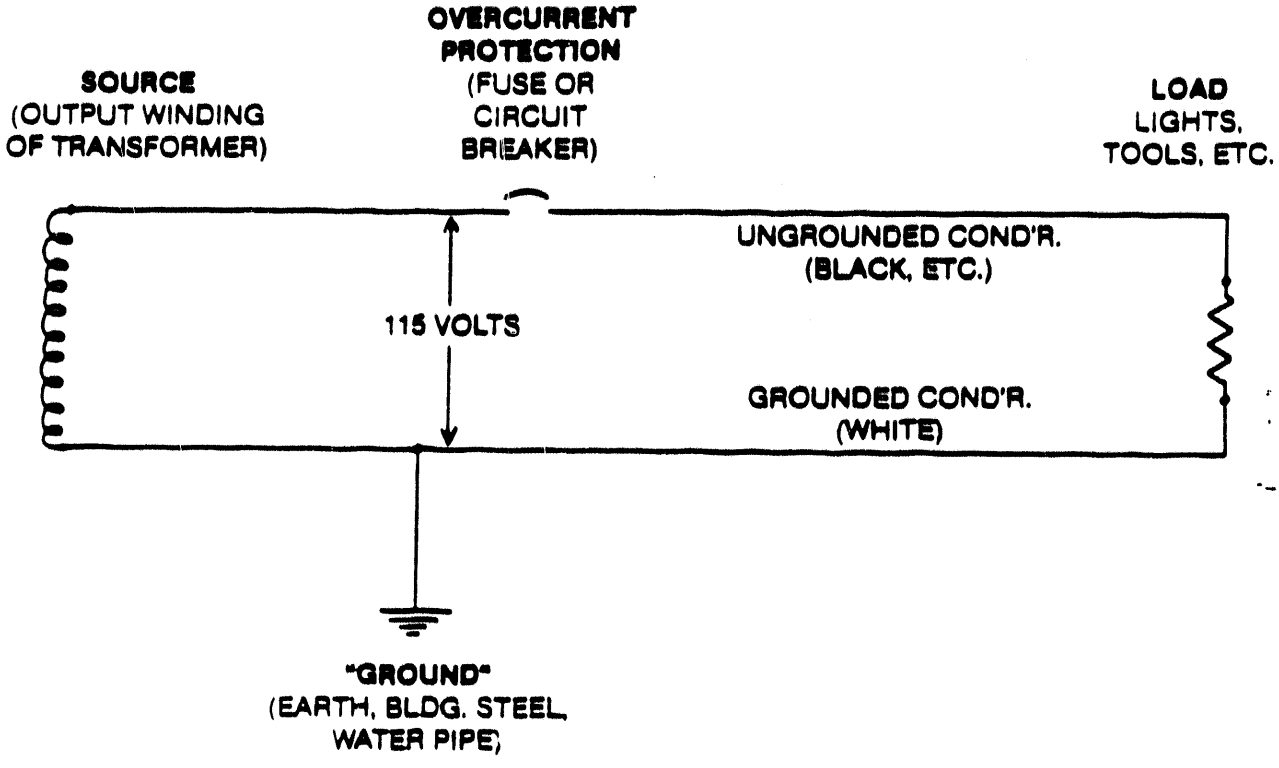

DIAGRAM #2

SINGLE-PHASE 2-WIRE CIRCUIT
(USUALLY SUPPLIES 8-10 LIGHTS OR 4-6 RECEPTACLES)

COMMON WORKPLACE CIRCUITS, CONTINUED

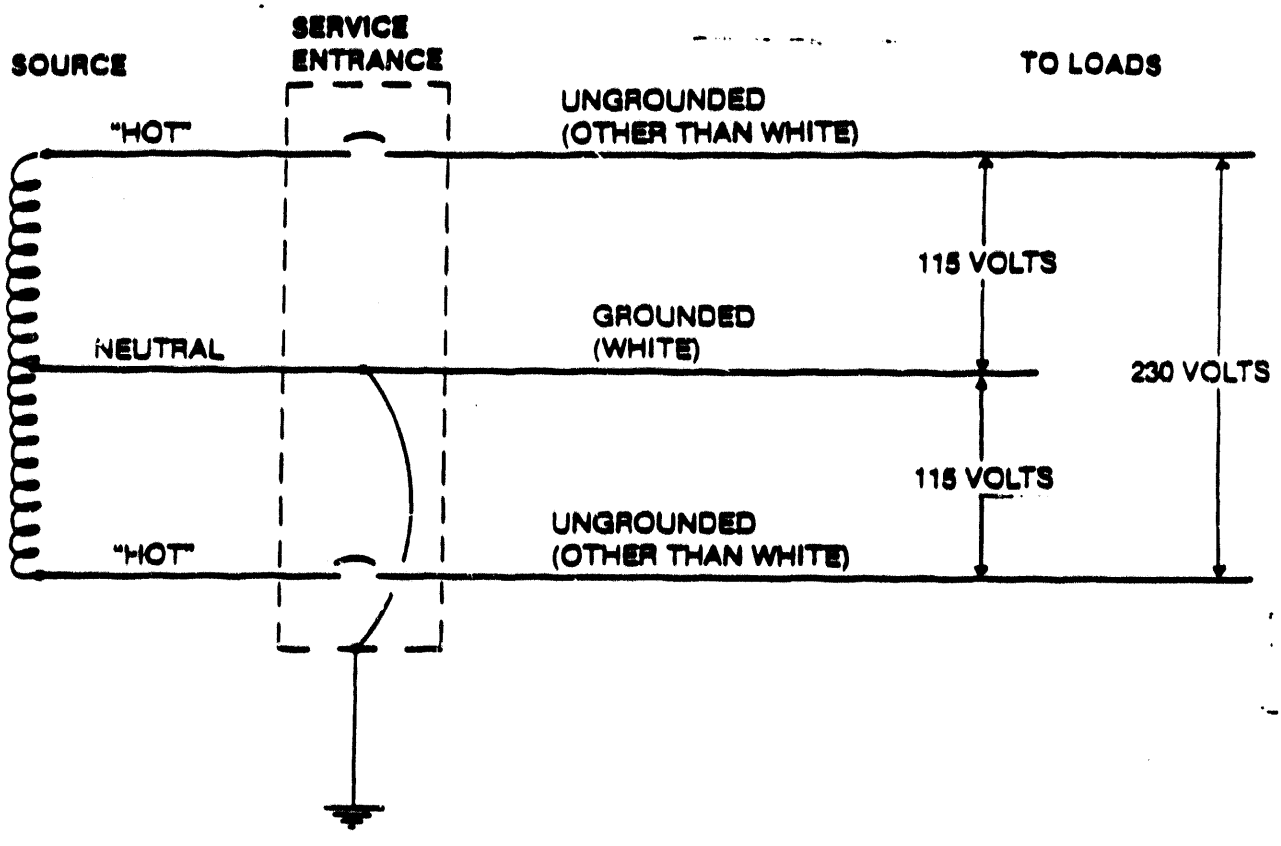

DIAGRAM #3

SINGLE-PHASE 3-WIRE CIRCUIT
(USUALLY SUPPLIES A NUMBER OF 2-WIRE CIRCUITS FOR LIGHTS AND RECEPTACLES, AND PROVIDES 230 VOLTS FOR LARGE APPLIANCES, AS IN YOUR HOME.)

NOT SHOWN

THREE-PHASE CIRCUITS MAY BE 3-WIRE OR 4-WIRE
(REQUIRED FOR LARGER MOTORS IN COMMERCIAL AND INDUSTRIAL OCCUPANCIES.)

GROUNDING, THE MOST-VIOLATED STANDARD

Because of the numerous accidents and electrocutions from faulty wiring and appliances, the protective system called "grounding" is required. This precautionary practice has no function unless and until there is electrical **leakage from a "hot" conductor to its enclosure.** When such a **ground fault** occurs, the grounding conductor goes into action to provide the following:

a. It **prevents voltages** between the electrical enclosure and other enclosures or surroundings.

b. It **provides a path** for large amounts of fault current to flow back to the service entrance, thus **blowing the fuse or tripping the circuit breaker.**

1. **How does grounding do its job?**

   Proper grounding requires connecting all of the enclosures (equipment housings, boxes, conduit, etc.) **together, and back to the service entrance enclosure.** This is accomplished by means of the green wire in the cord (to portable equipment), and the conduit system or a bare wire in the fixed wiring of the building.

   When a ground fault occurs, as in a defective tool, **the grounding conductor must carry enough current to immediately trip the circuit breaker** or blow the fuse. This requires that the ground fault path must have low impedance. And the only low-impedance path is the green wire (in portable cord) and the metallic conduit system (or an additional bare wire if conduit is not used).

   Note that the **normal useful current** flows in the "current-carrying" loop from the transformer over the black wire, through the tool motor and back over the white wire to the transformer. The grounding conductor carries no current. See Diagram #4.

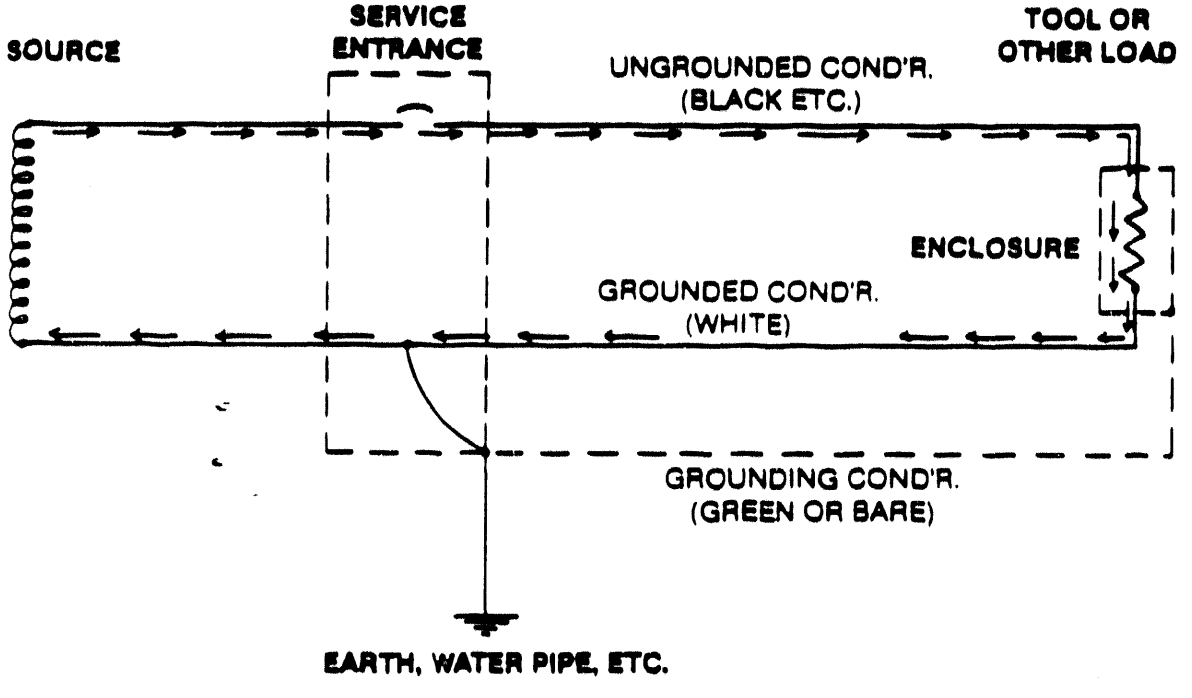

DIAGRAM #4

However, when the insulation on the black wire fails and the copper conductor touches the case of the tool, **the ground-fault current flows through the green wire and the conduit system back to the service entrance.**

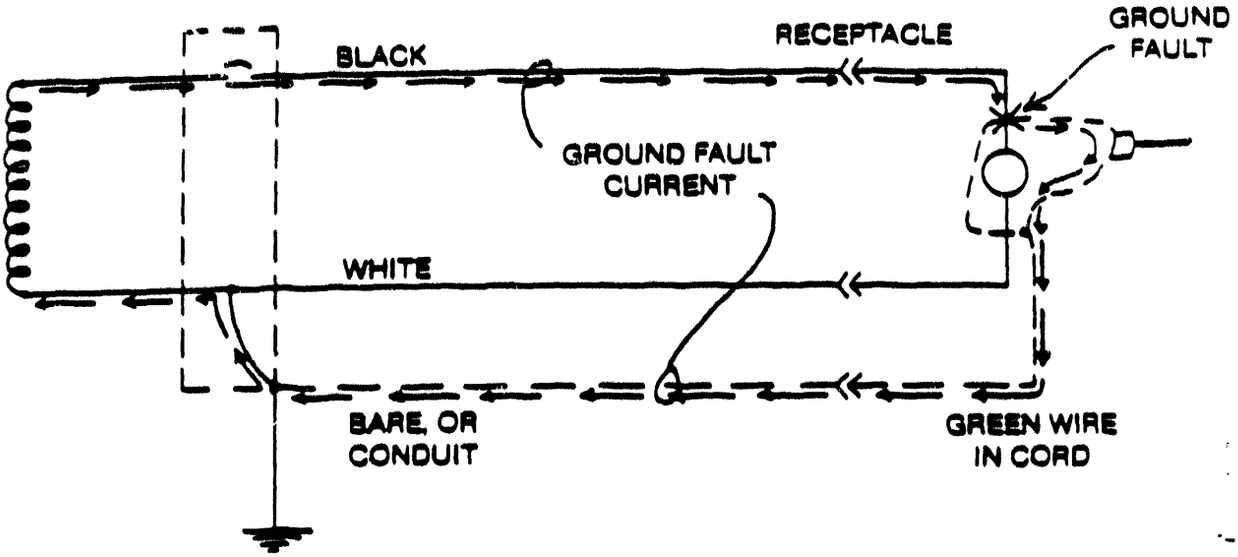

DIAGRAM #5

THE GROUND FAULT LOOP
(THE METALLIC CONDUIT, OR A BARE WIRE IN PLACE OF CONDUIT, PROVIDES THE LOW-IMPEDANCE GROUND-FAULT PATH.)

If the equipment-grounding conductors are properly installed, this current will be perhaps 10 times or more above normal current, so the circuit breaker will trip out immediately.

2. **But what happens if the grounding does not do the job?**

If the ground-fault path is not properly installed it may have such high impedance (resistance) that it does not allow the large amount of current to flow. Or, if the grounding conductor continuity has been lost (as when the U-shaped prong is broken off of a plug), no fault current will flow. In these cases, the circuit breaker will not trip out, the case of the tool will be energized, and **persons touching the tool may be shocked.**

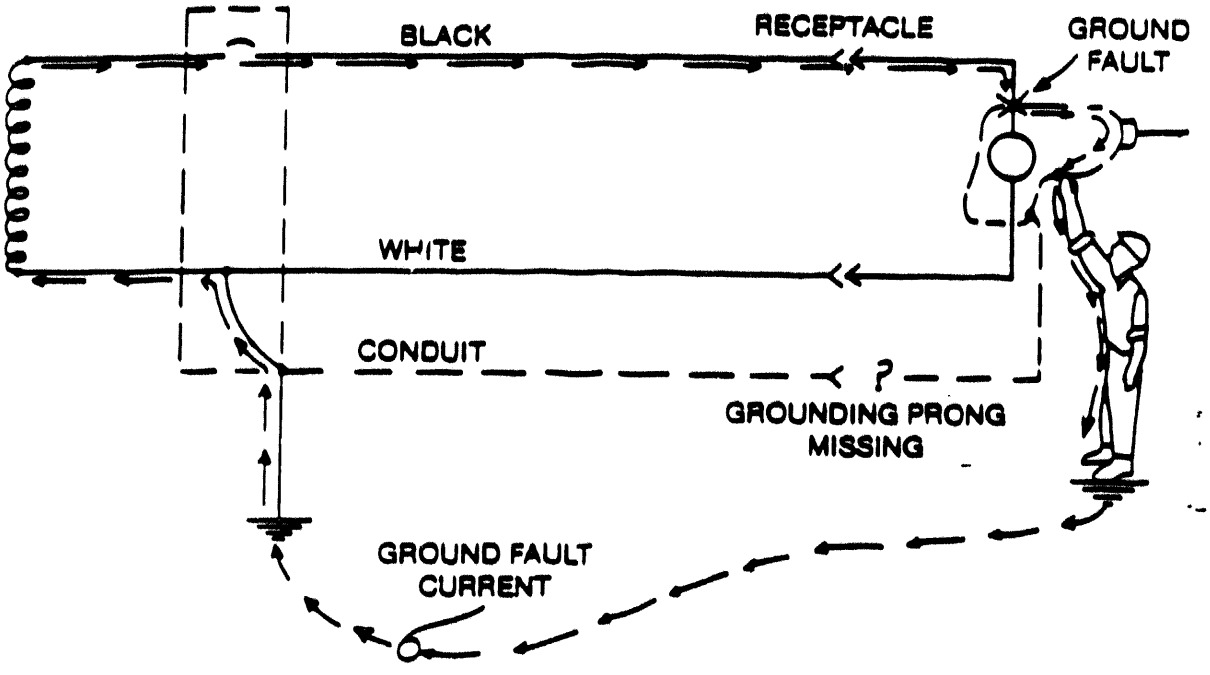

DIAGRAM #6

EQUIPMENT-GROUNDING CONDUCTOR NOT COMPLETE
(THEREFORE THE CIRCUIT BREAKER DOES NOT TRIP OUT WHEN GROUND-FAULT OCCURS.)

This dangerous ground-fault current, flowing through a person, or earth, will encounter such high resistance that it will not rise high enough to trip the circuit breaker. Only **the metallic equipment-grounding conductor, which is carried along with the supply conductors,** will have impedance so low that the required large fault current will flow.

So the only way to be sure that the equipment grounding conductor does its job is to be sure that the green wire, the grounding prong, the grounding receptacle, and the conduit system are intact, **from each electrical tool back to the service entrance.**

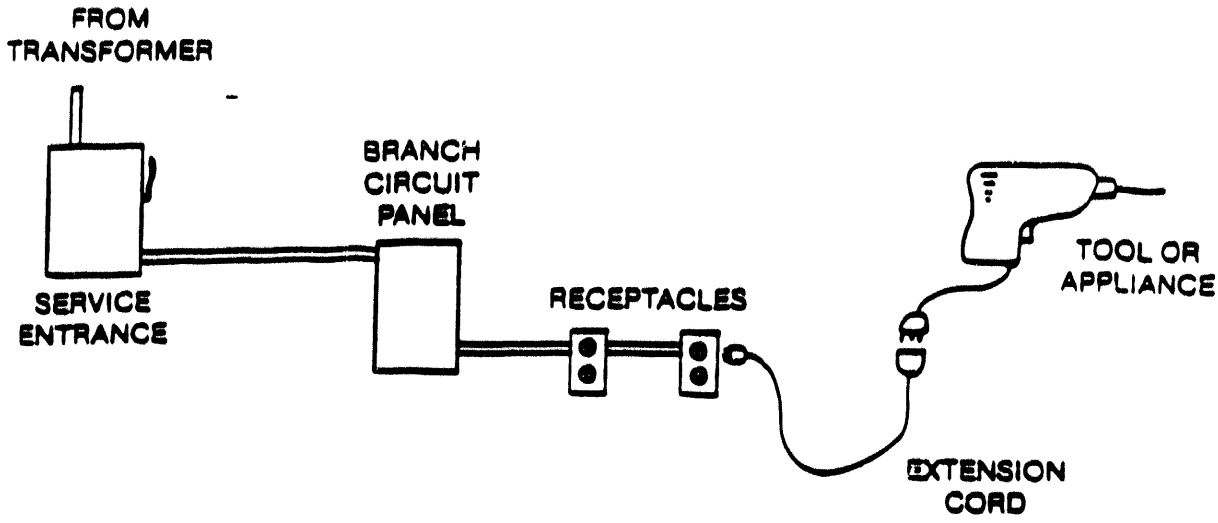

DIAGRAM #7

PICTORIAL DIAGRAM OF TYPICAL INSTALLATION

THE FIXED WIRING FROM THE SERVICE ENTRANCE TO THE RECEPTACLES PROVIDES EQUIPMENT GROUNDING THROUGH CONDUIT OR A BARE WIRE. THE FLEXIBLE CORDS PROVIDE GROUNDING THROUGH A GREEN WIRE AND THE U-SHAPED PRONGS, THUS COMPLETING THE GROUND-FAULT PATH.

3. **The Ground-Fault-Circuit Interrupter ("GFCI") provides an additional precaution.**

The GFCI is a solid-state, sensitive device which can be applied to open the circuit in case of ground-fault leakage **too small to trip the circuit breaker,** (but large enough to be dangerous to people).

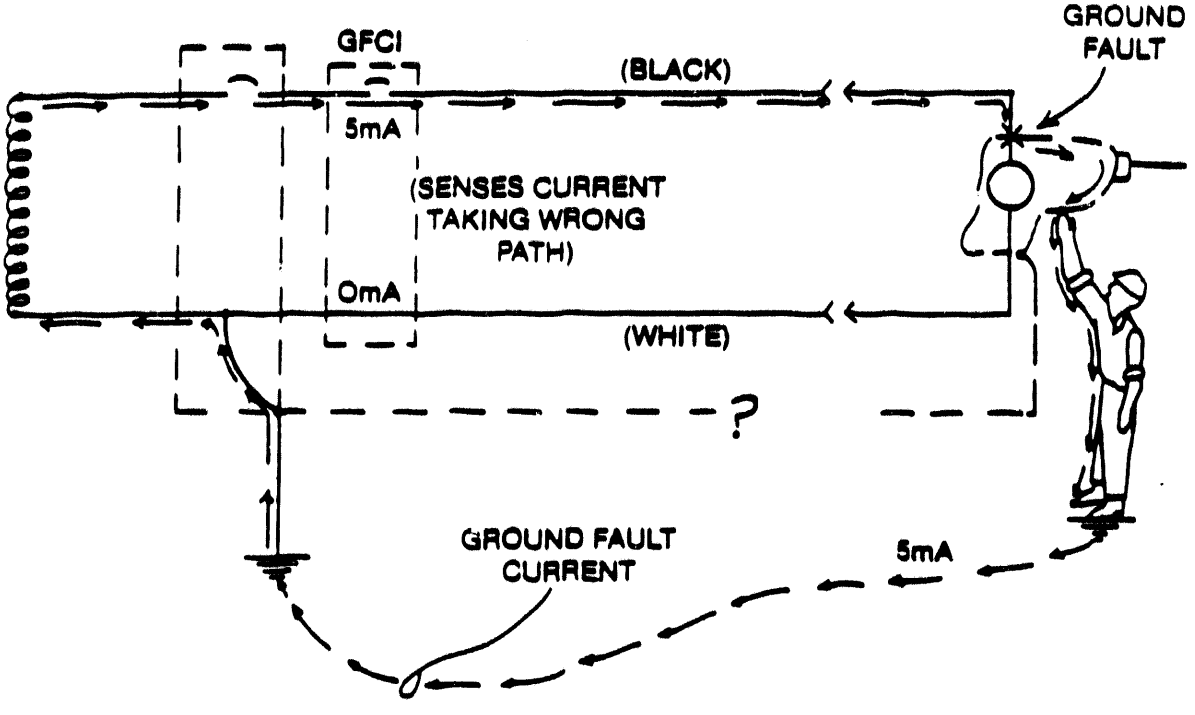

DIAGRAM #8

HOW THE GFCI PROTECTS PEOPLE

(BY OPENING THE CIRCUIT WHEN CURRENT FLOWS THRU A GROUND-FAULT PATH.)

Note that the GFCI will open the circuit if 5 mA or more of current returns to the service entrance by any path other than the intended white wire. If the equipment-grounding conductor is properly installed and maintained this will happen as **soon as the faulty tool is plugged in.** If by chance this grounding conductor is not intact and low-impedance, the GFCI may not trip out **until a person provides the path.** In this case the person will receive a shock, but the GFCI should trip out so quickly that the shock will not be harmful.

4. **Where are GFCI's required?**

OSHA requires GFCI's on **construction sites** because of the combined special hazards of two conditions:

a. Questionable integrity of the ground-fault path through **temporary wiring.**

b. Presence of **wetness** due to working on earth, wet concrete, etc.

RECEPTACLES WHICH ARE IN USE BY EMPLOYEES SHALL HAVE GFCI'S FOR PERSONNEL PROTECTION OR THE ASSURED EQUIPMENT GROUNDING PROGRAM

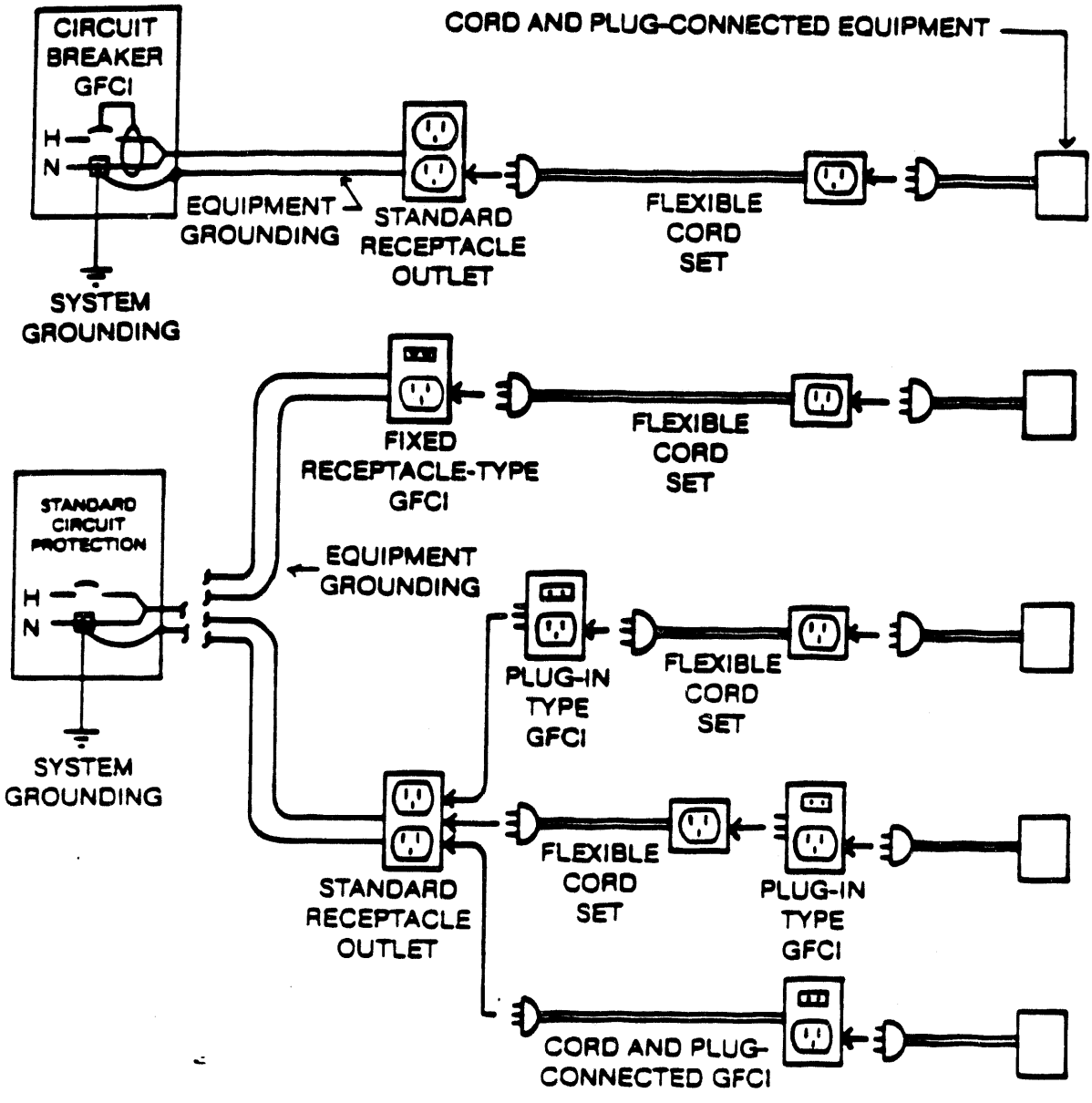

DIAGRAM #9

CONSTRUCTION SITES

RECEPTACLES WHICH ARE NOT A PART OF THE PERMANENT WIRING CAN BE PROTECTED IN ONE OF SEVERAL WAYS, USING GFCI'S.

TEST FOR CORRECT CONNECTION AND ELECTRICAL CONTINUITY OF THE EQUIPMENT GROUNDING CONDUCTOR

120 VOLT, SINGLE-PHASE, 15 OR 20 AMPERE FIXED RECEPTACLE OUTLET

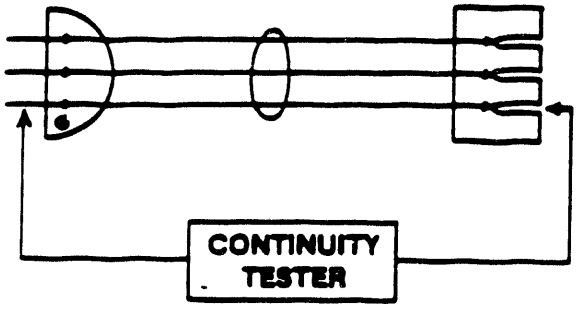

FLEXIBLE CORD SET FOR 120 VOLT 15 OR 20 AMPERE RECEPTACLE

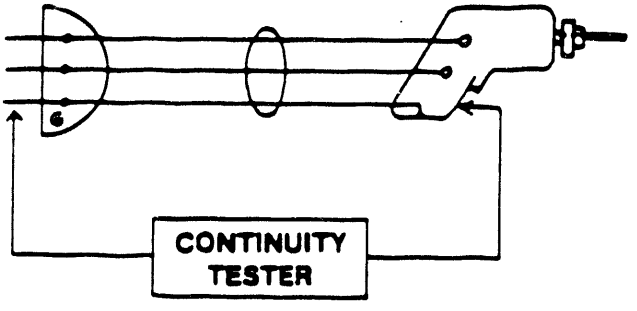

120 VOLT CORD AND PLUG-CONNECTED EQUIPMENT

DIAGRAM #10

CONSTRUCTION SITES

A DOCUMENTED TESTING PROCEDURE MAY BE SUBSTITUTED FOR THE USE OF GFCI'S.

SYSTEM GROUNDING REQUIREMENTS

29 CFR 1926.404(f)(1)(iv) and 29 CFR 1910.304(f)(1)(iv) contain system grounding requirement information.

"AC Systems of 50 volts to 1000 volts shall be grounded under any of the following conditions, unless exempted by paragraph (f)(1)(v) of this section:

(*A*) If the system can be so grounded that the maximum voltage to ground on the ungrounded conductors does not exceed 150 volts;

(*B*) If the system is nominally rated 480Y/277 volt, 3-phase, 4-wire in which the neutral is used as a circuit conductor;

(*C*) If the system is nominally rated 240/120 volt, 3-phase, 4-wire in which the midpoint of one phase is used as a circuit conductor; or ..."

AC SYSTEMS 50 TO 1,000 VOLTS REQUIRING GROUNDING

SYSTEM SCHEMATIC	DESCRIPTION	COMMON USES
SINGLE PHASE TRANSORMER	VOLTAGE BETWEEN UNGROUNDED CONDUCTORS IS 240 VOLTS VOLTAGE TO GROUND IS 120 VOLTS	GENERAL LIGHT AND POWER SYSTEMS. MEETS CONDITION (a)

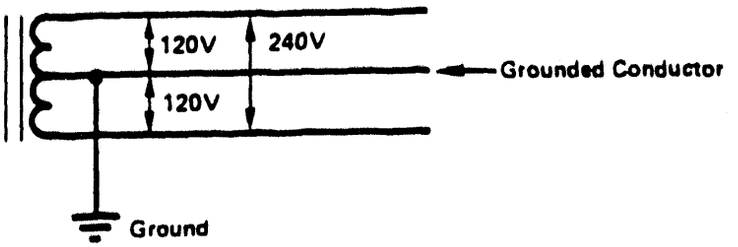

1) 120/240 VOLT, SINGLE PHASE 3 WIRE SYSTEM

WYE(Y) CONNECTED TRANSFORMER	VOLTAGE BETWEEN UNGROUNDED CONDUCTORS IS 208 VOLTS VOLTAGE TO GROUND IS 120 VOLTS	GENERAL LIGHTING, RECEPTACLES, SMALL MACHINES. MEETS CONDITION (a)

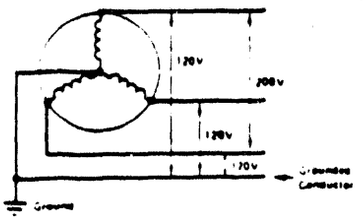

2) 208Y/120 VOLT, THREE PHASE, 4 WIRE SYSTEM

WYE(Y) CONNECTED TRANSFORMER	VOLTAGE BETWEEN UNGROUNDED CONDUCTORS IS 480 VOLTS VOLTAGE TO GROUND IS 277 VOLTS	GENERAL LIGHTING AND HEAVY INDUSTRIAL APPLICATIONS. MEETS CONDITION (b)

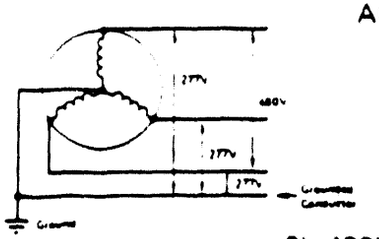

3) 480Y/277 VOLT, THREE PHASE, 4 WIRE SYSTEM

DELTA (Δ) CONNECTED TRANSFORMER	VOLTAGE BETWEEN PHASE CONDUCTORS IS 240 VOLTS (A&B, B&C, AND A&C) VOLTAGE TO GROUND IS 120 VOLTS (BETWEEN A, B & GROUND) AND 208 VOLTS (BETWEEN PHASE CONDUCTOR C AND GROUND)	OLDER INDUSTRIAL APPLICATIONS SERVING MOSTLY 3-PHASE MOTORS. A CONDUCTOR IS CONNECTED TO THE MID-POINT OF ONE PHASE WINDING TO OBTAIN 120 VOLTS FOR GENERAL USE. MEETS CONDITION (c)

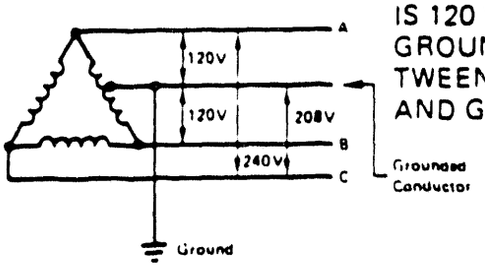

4) 240Δ/120 VOLT, 3 PHASE, 4 WIRE SYSTEM

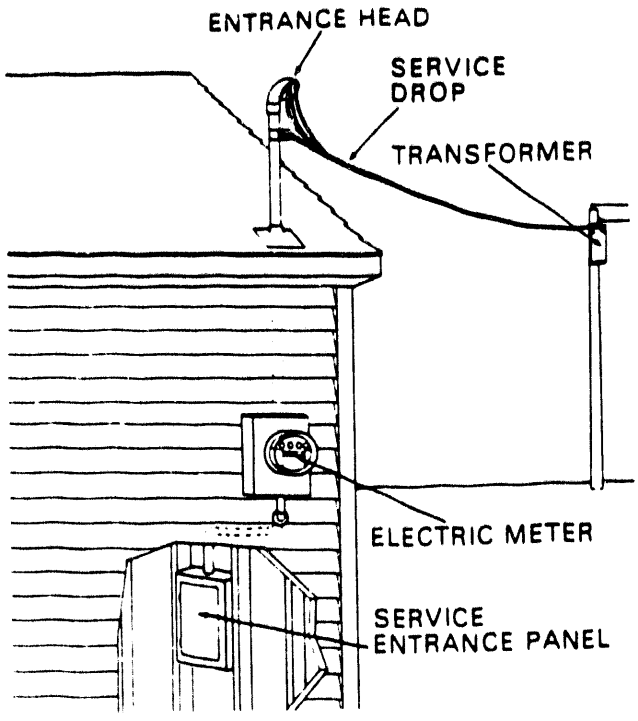

The source of power is the service entrance panel (SEP) which receives power from the supplier lines

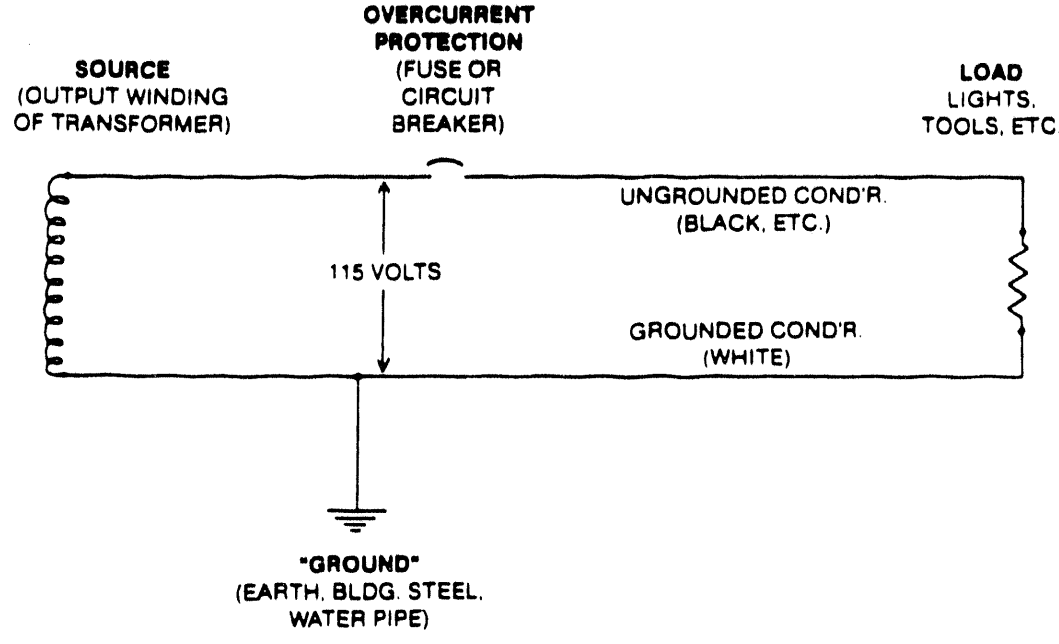

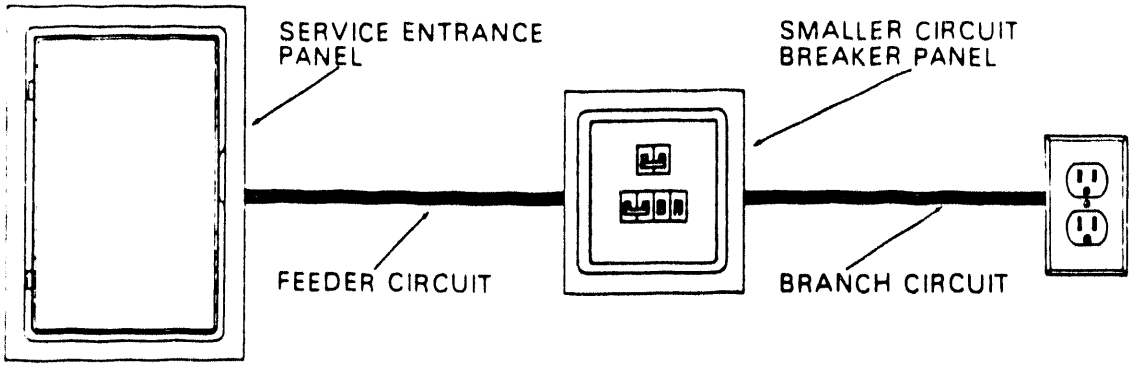

A feeder circuit extends between the SEP and a fuse or circuit breaker protecting a branch circuit.

COMMON WORKPLACE CIRCUITS, CONTINUED

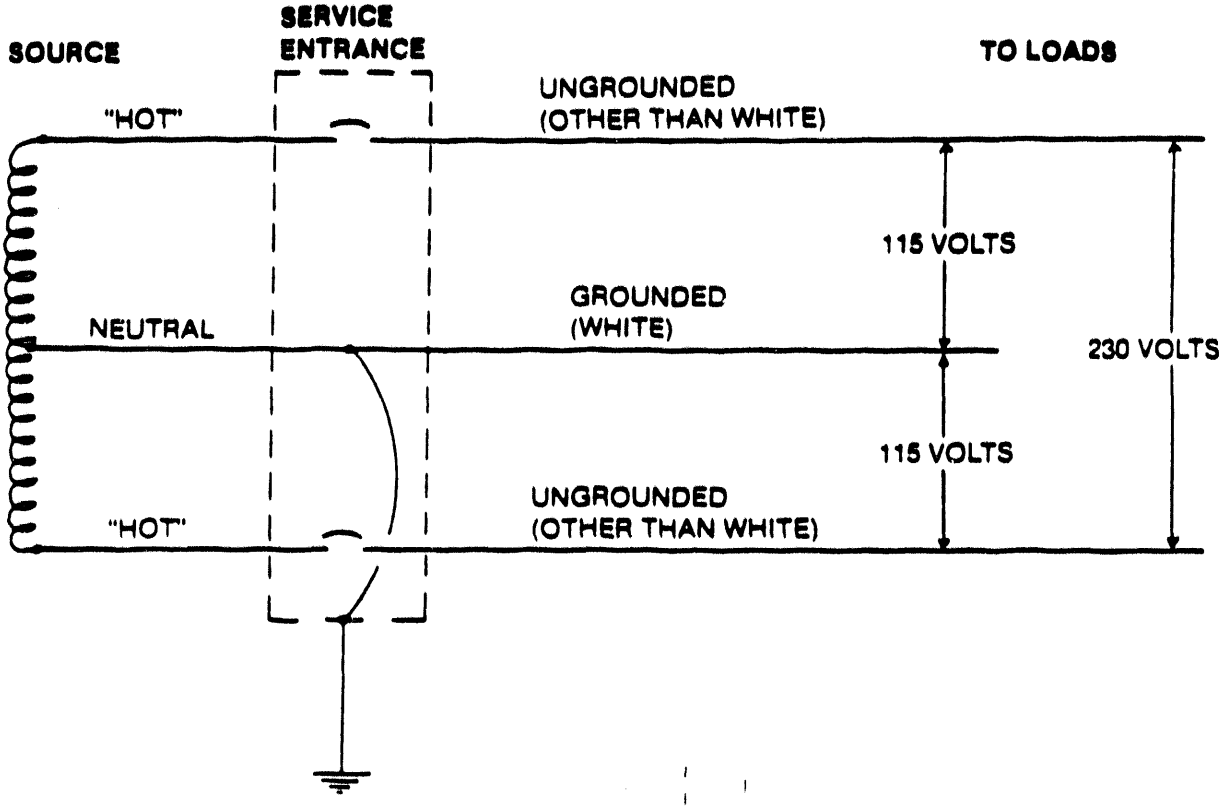

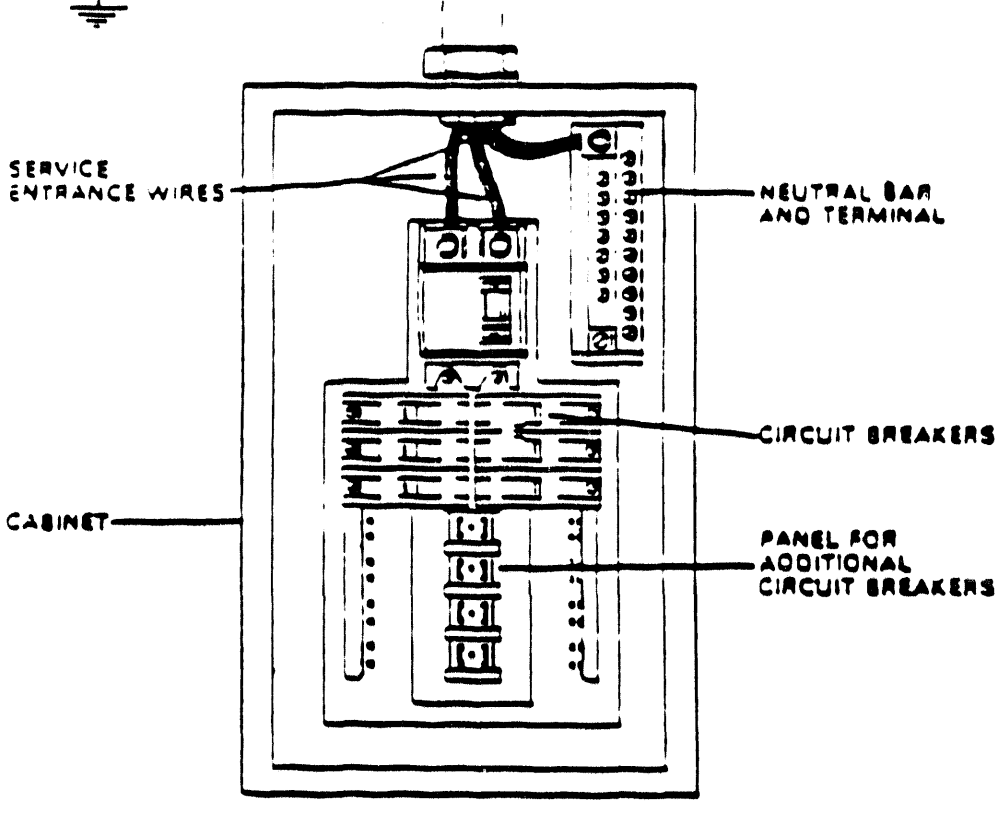

SEP box with service entrance wires, neutral bar and circuit breaker panel installed

By connecting the white neutral wire and the bare grounding wire to the neutral bar in the SEP, you have grounded both the circuit and the equipment. The following example illustrates grounding the clothes washer and its circuit. Note the terminal connections on the back of the washer. The black and white wires of the cord carry current to operate the washer. When the cord is plugged into the receptacle, the neutral wire is connected to ground on the neutral bar through the white wire in the circuit cable. An accidental contact of the non-grounded current carrying wires to circuit ground will result in a short circuit, and the circuit breaker or fuse will open to break the circuit.

The green grounding wire in the figure below is fastened to the frame of the washer by means of a metal screw terminal. When plugged into the receptacle, the grounding wire is connected by the grounding circuit to the neutral bar at the SEP. This means that the *equipment* is *grounded* through the grounding wire to the neutral bar. Thus, if a non-grounded circuit conductor should make contact with the frame or machinery of the washer, a short circuit fault will occur and open the fuse or trip the circuit breaker. Grounding the outlet boxes and receptacles has the effect of grounding all appliances and equipment that may be plugged into any receptacle on each circuit, provided the appliance cord has a grounding conductor and plug.

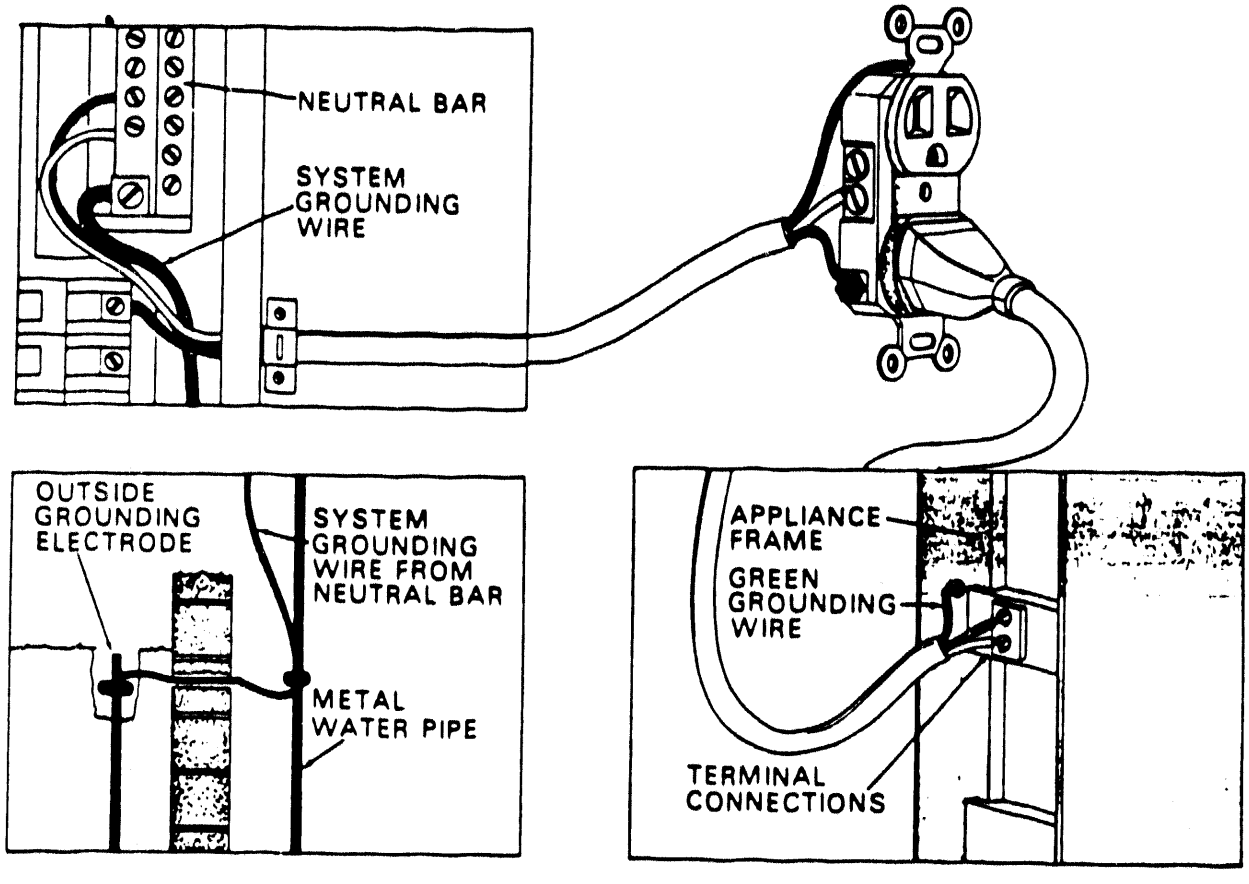

The grounding wire connects to the metal frame of the appliance, to the receptacle and receptacle box and to the neutral bar in the service entrance panel

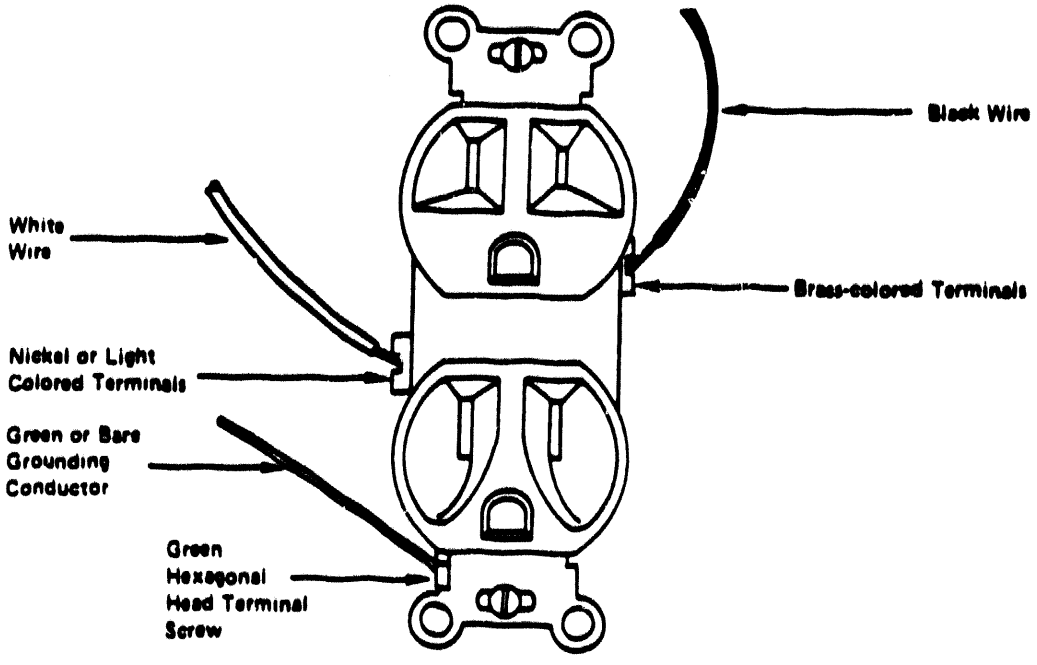

Duplex receptacle correctly wired to designated terminals

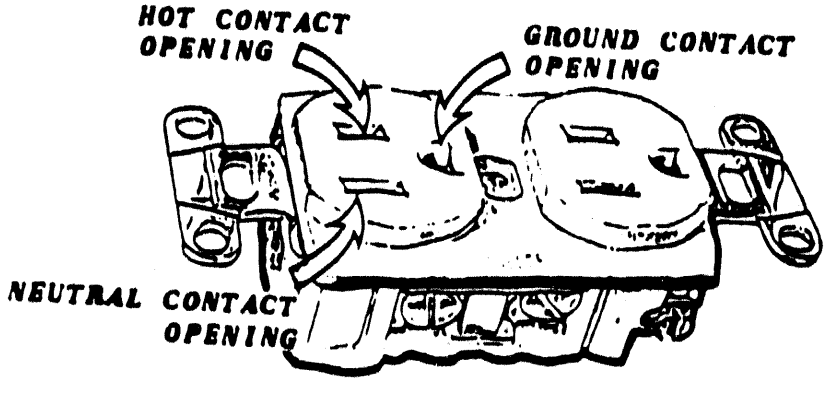

GROUND FAULT CIRCUIT INTERRUPTERS (GFCI)

GFCI's are installed to protect people from shock hazards. As discussed in the previous sections, system and equipment grounding provides protection for the electrical system and equipment and considerable protection against shock in most situations. However, there is a need for a more sensitive device to protect people from shock in the more hazardous locations in and around the home. The GFCI's are designed for this purpose.

Ground faults can damage equipment. This costs money. But should a person be a part of this unintended path, the result could be injury or death.

Only 50 milliamperes, or 0.0033 of the current required to open a 15-ampere circuit breaker or fuse, can be fatal.

A GFCI can help prevent harm to people in situations like these.

- All 125-volt single phase, 15- and 20-ampere construction site receptacles which are not part of the permanent structure and which ARE IN USE BY EMPLOYEES must have GFCI protection. This is interpreted to mean that employees may use a portable GFCI that can be moved from one receptacle to another on the job.

- The Code requires GFCI protection for all 120-volt, **15- and 20-ampere receptacles** installed in **bathrooms, garages** with some exceptions, and all **outdoor receptacles** of homes. Also, any **receptacle within 4.6 m (15 feet) of a swimming pool** must be controlled by a GFCI. A garage receptacle in space provided for a plug-in appliance such as a freezer.

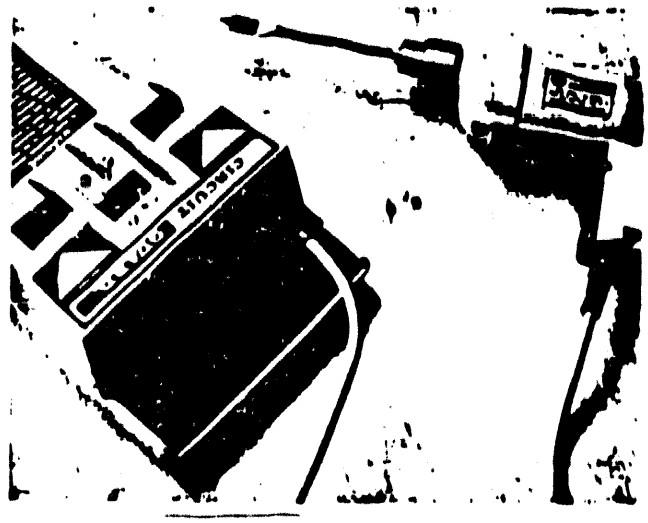

Portable GFCI's can be located where needed on construction sites

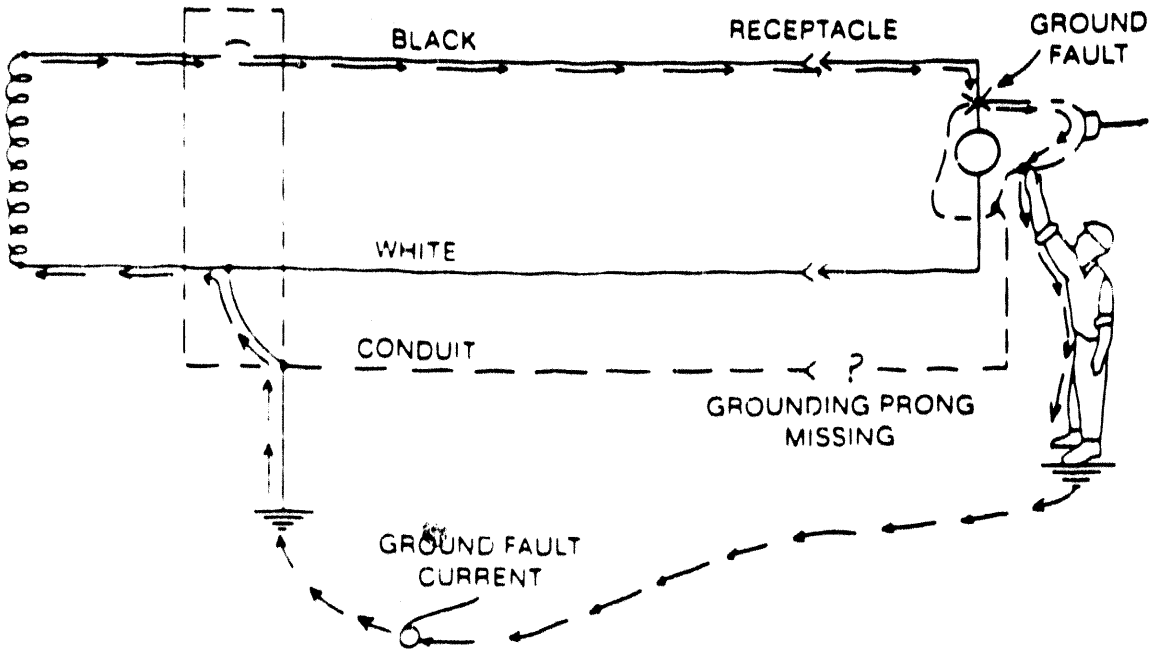

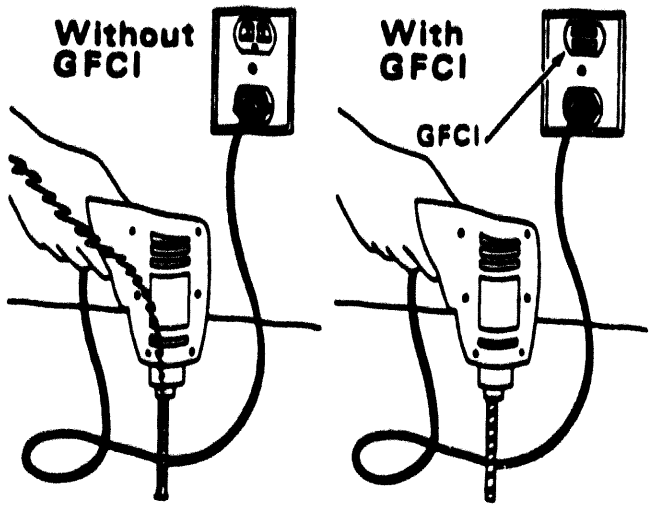

GFCI's protect people from fault currents as small as five thousands of an ampere

TYPES AND SIZES OF GFCI's

Three types of GFCI's are available:

- A portable type plugs directly into an existing receptacle.
- A second type can be permanently installed to replace a standard receptacle. For outdoor use, weather-proof types are available.
- The third type is a combination circuit breaker-GFCI. It is installed instead of a standard circuit breaker in the SEP.

The GFCI rating in volts and amperes must be the same as the circuit it protects.

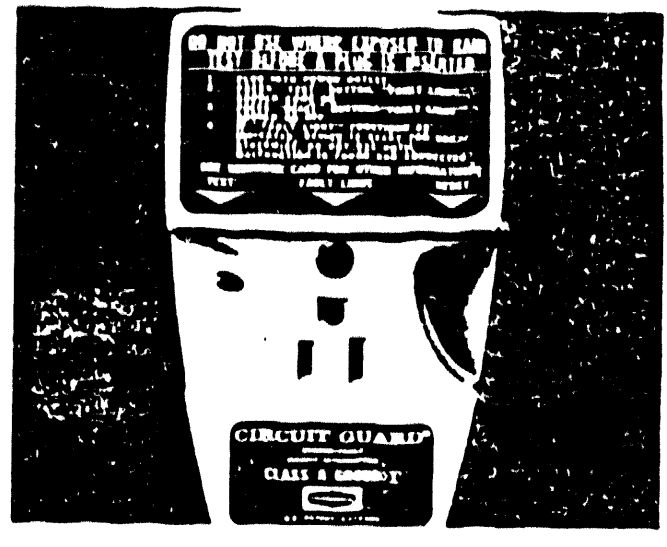

The portable GFCI plugs directly into an existing receptacle

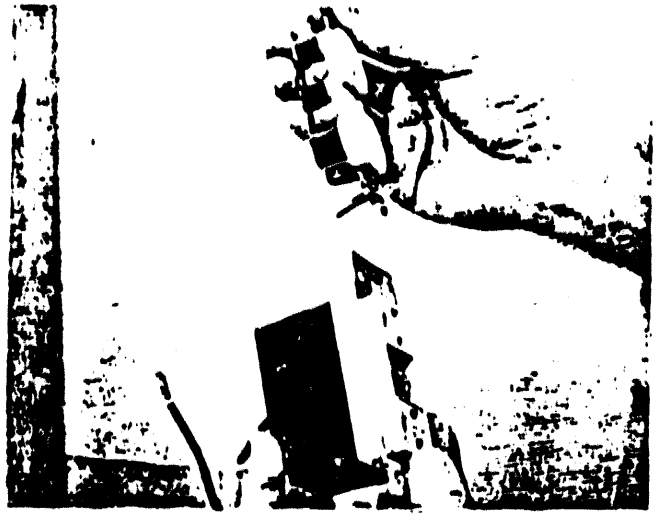

A GFCI (bottom) can be permanently installed in place of a receptacle

Circuit Breaker-GFCI

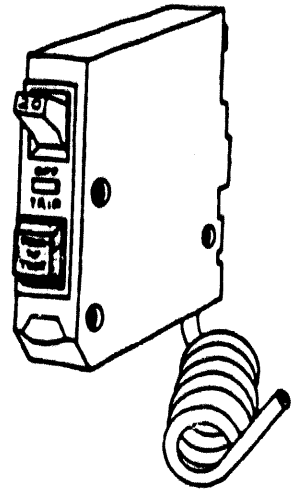

The combination circuit-breaker GFCI is installed in the service entrance panel. It protects all outlets on that circuit.

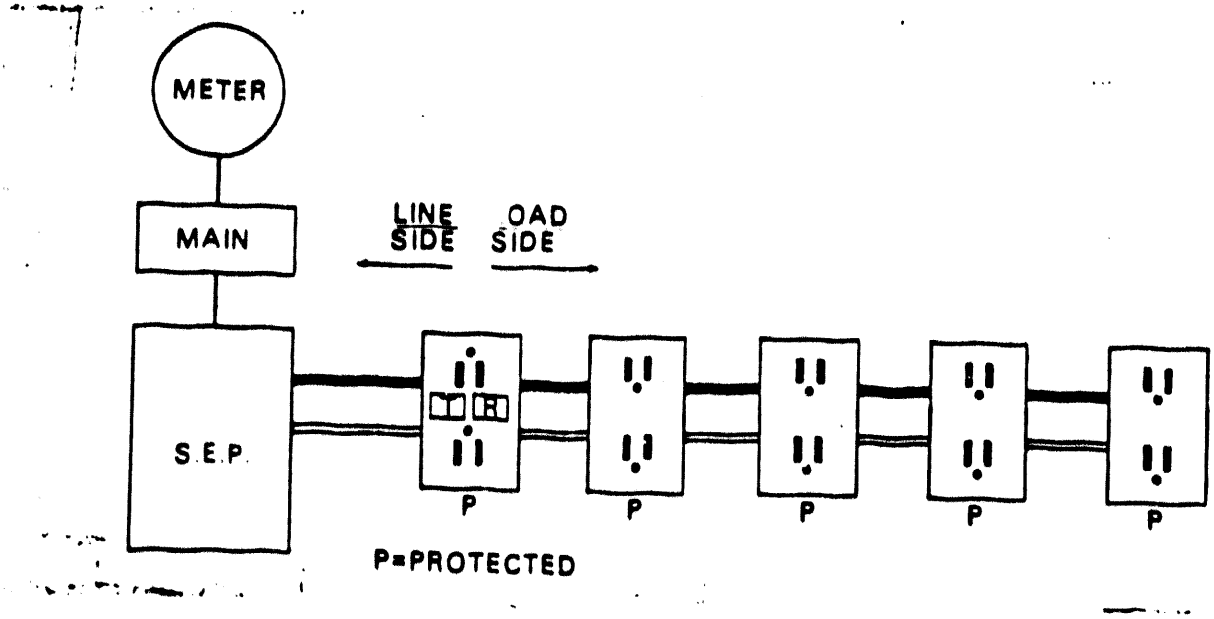

A GFCI installed as the first receptacle in a circuit provides protection to all other receptacles beyond it in the circuit

NO BOOT LEGS AT BRANCH CIRCUITS OR DUPLEX

EQUIPMENT GROUNDING CONDUCTOR CAN ONLY BE GROUNDED AT THE SEP

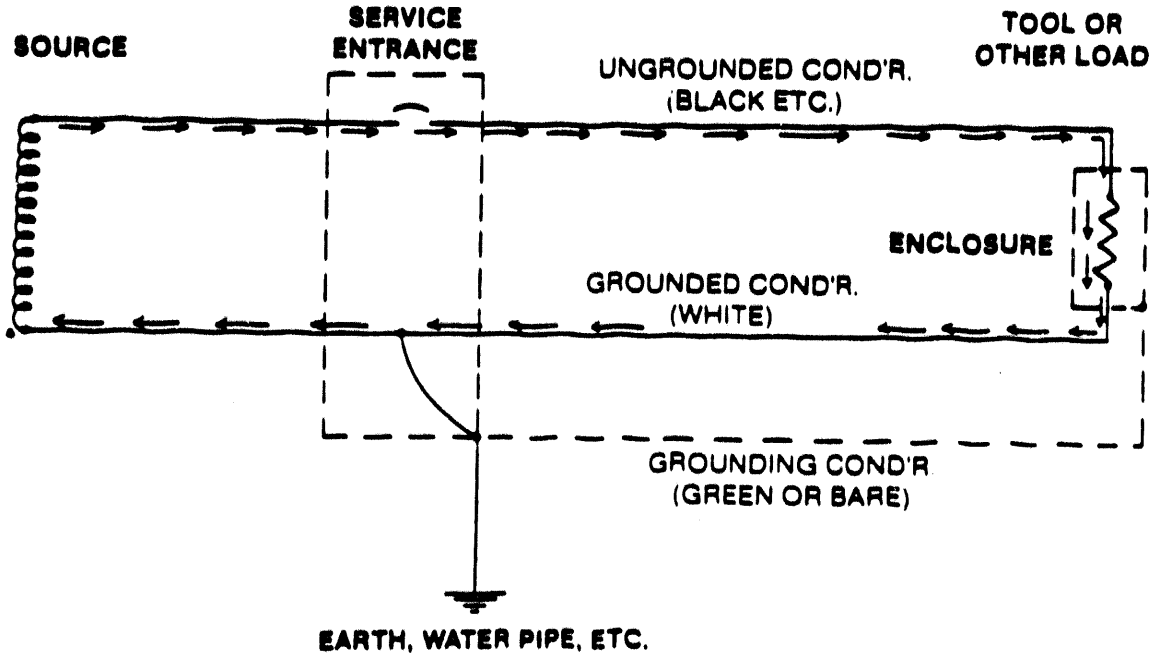

HAZARD

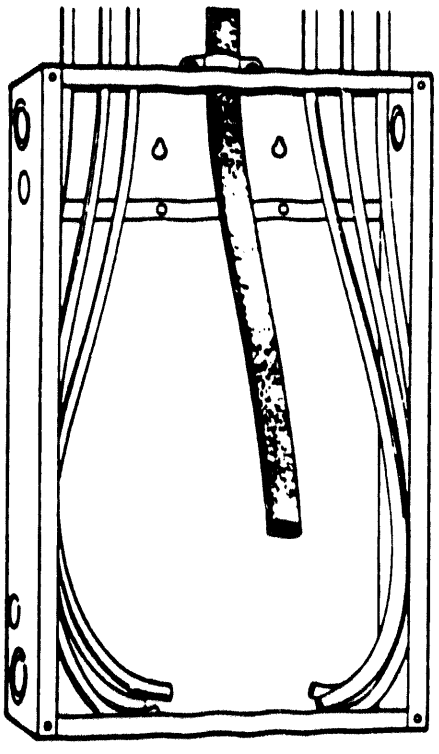

1. REVERSED POLARITY
2. LOOSE WHITE CONDUCTOR 115 VOLTS ON CASE OF TOOL
3. E = I x R

TEST FOR CORRECT CONNECTION AND ELECTRICAL CONTINUITY OF THE EQUIPMENT GROUNDING CONDUCTOR

120 VOLT, SINGLE-PHASE, 15 OR 20 AMPERE FIXED RECEPTACLE OUTLET

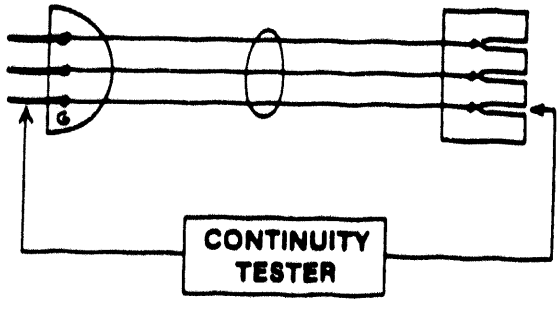

FLEXIBLE CORD SET FOR 120 VOLT 15 OR 20 AMPERE RECEPTACLE

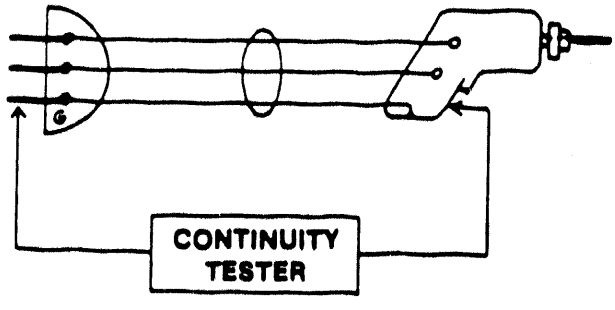

120 VOLT CORD AND PLUG-CONNECTED EQUIPMENT

CONSTRUCTION SITES:
A DOCUMENTED TESTING PROCEDURE MAY BE SUBSTITUTED FOR THE USE OF G.F.C.I.'s.

305-6 (b)

Configuration Chart

		NEMA CHART REF	15 AMPERE RECEPTACLE	15 AMPERE PLUG	20 AMPERE RECEPTACLE	20 AMPERE PLUG	30 AMPERE RECEPTACLE	30 AMPERE PLUG
NEMA CONFIGURATIONS FOR GENERAL PURPOSE NON-LOCKING PLUGS AND RECEPTACLES								
2 POLE 2 WIRE	125V	1	1504	1419 (Polarized) 1404				
2 POLE 2 WIRE	250V	2		1405				
2 POLE 3 WIRE GROUNDING	125V	5	1547	1447	1533	1433		
2 POLE 3 WIRE GROUNDING	250V	6	1549	1449	1548	1448		
2 POLE 3 WIRE GROUNDING	277V AC only	7	1534	1434				
NEMA CONFIGURATIONS FOR LOCKING PLUGS AND RECEPTACLES								
2-POLE 2-WIRE	125V	L1	2504	2404				
2-POLE 2-WIRE	250V	L2			2706	2606		
2 POLE 3 WIRE GROUNDING	125V	L5	2547	2447	2747	2647	2947	2847
2 POLE 3 WIRE GROUNDING	250V	L6			2748	2648	2948	2848
2 POLE 3 WIRE GROUNDING	277V AC only	L7	2534	2434	2749	2649	2949	2849
3 POLE 4 WIRE GROUNDING	125/250V	L14			2774	2674	2974	2874
3 POLE 4 WIRE GROUNDING	3Ø 250V	L15			2775	2675	2975	2875
3 POLE 4 WIRE GROUNDING	3Ø 480V	L16			2776	2676	2976	2876
AVAILABLE CONFIGURATIONS, NON-NEMA STANDARDS								
3 P 3 W	125V		a 1507	a 1407				
3 POLE 3 WIRE	125V		a 2507	a 2407				
3 POLE 3 WIRE	125/250V				2708	2608		
3 POLE 3 WIRE	250V				b 2708G	b 2608G	2908	2808
4 P 4 W	250V				b 2709	b 2609	c 2909	c 2809

WOODHEAD CATALOG NUMBERS

"Safety Yellow" devices are available in numerous styles for a variety of applications – locking, weatherproof, etc. Consult respective product line pages in Wiring Device Section of catalog for detailed information.

NOTES

a. Also rated 10 Amp / 250 Volt

b. Also rated 10 Amp / 600 Volt A C

c. Also rated 30 Amp / 600 Volt A C

IT'S NO-GLOW, NO-GO WITH THE WOODHEAD

GROUND CONTINUITY MONITOR

For The Contractor—The Electrician—
The Industrial Maintenance Department

THE CONVENIENT WAY TO
- provide personnel protection
- satisfy OSHA requirements

WHILE HOLDING RECORD-KEEPING CHORES TO A MINIMUM!

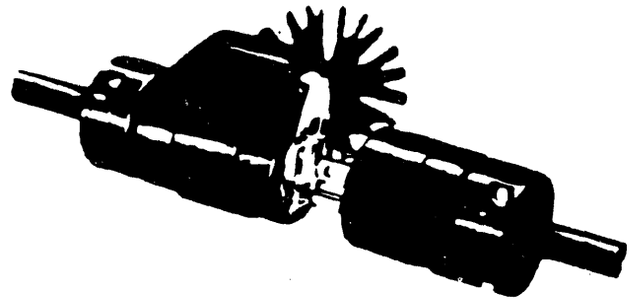

THE PROBLEM . . . . .

To comply with requirements for construction sites, the employer has two alternatives.

He must either provide approved ground-fault circuit interrupters for personnel protection in all 120 volt, single phase, 15- and 20-ampere receptacle outlets which are not a part of the permanent wiring of the building or structure, and which are in use by employees, or

He must establish and implement an Assured Equipment Grounding Conductor Program covering all cord sets, receptacles as described above, and equipment connected by cord and plug which are available for use by employees.

Many employers have opted for the Assured Equipment Grounding Program, which entails a considerable amount of testing on a regular and frequent basis. Tests required are

(A) All equipment grounding conductors must be tested for continuity

(B) Each receptacle and attachment plug must be tested for correct attachment of the equipment grounding conductor

These tests must be performed before first use, before equipment is returned to service following repairs, before equipment is used after any incident that may have caused damage, and at intervals not to exceed three months.

Finally, all of these tests must be recorded, and the records kept available at the jobsite for inspection by OSHA compliance officers.

Ref. OSHA Standard 1926.400(h)

THE SOLUTION . . . . .

Because of the way extension cords are used on construction jobsites, most of the expense as far as record-keeping and documentation is concerned is in conjunction with extension cords. To eliminate this expense, Woodhead offers the *GCM*, which will constantly monitor the grounding of the extension cord.

The Woodhead *GROUND CONTINUITY MONITOR* is a simple device that is wired into an extension cord in place of a conventional connector. When the extension cord is plugged into the receptacle a light in the face of the GCM gives the following indications:

1. If equipment grounding conductor has continuity, the lamp glows.
2. If the ground wire of the connector is not connected, ground is not continuous, the lamp will not light.
3. The lamp also remains dark in the presence of the following conditions:

Reversed Polarity	Open Neutral
Open Hot	Hot & Ground Reversed
Hot on Neutral, Hot Unwired	

By plugging the cord into the receptacle, and leaving it in position to provide power for tools, lights, etc., the glow of the lamp will afford an immediate check of the above conditions. If the light does not show, the employee knows he must call an electrician to check the condition.

Because this device maintains a constant check on the extension cords, the need for testing and record-keeping on these extension cords is eliminated.

As a plus benefit, you also know immediately that you have power available in the cord.

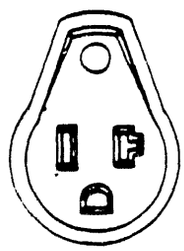

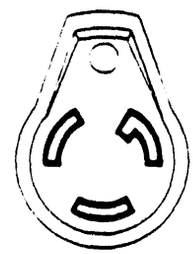

ORDERING INFORMATION

Rating and NEMA Conf	20A-125V NEMA 5-20			15A-125V NEMA 5-15		15A-125V Locking NEMA L5-15	20A-125V Locking NEMA L5-20
Cat. No. GCM only	15M33			15M47		25M47	27M47
Cord set with appropriate plug and cord size	#14-3 SO	#12-3 SO	#16-3 SO	#14-3 SO	#16-3 SO	#14-3 SO	#14-3 SO
25 ft. of cord	15M33A143	15M33A123	15M47A163	15M47A143	25M47A163	25M47A143	27M47A143
50 ft. of cord	15M33B143	15M33B123	15M47B163	15M47B143	25M47B163	25M47B143	27M47B143
100 ft. of cord	15M33D143	15M33D123	15M47D163	15M47D143	25M47D163	25M47D143	27M47D143

GROUND LOOP IMPEDANCE TESTER

Good grounding is basic to the safety of any electrical system . . . and a basic part of any Preventive Maintenance Program is a check of the integrity of the grounding circuits.

The Woodhead Ground Loop Impedance Tester (G.L.I.T.) plugs into a standard grounding type receptacle. It measures the impedance of the ground and clearly registers the result in ohms on a direct reading scale.

Unlike other testing devices, the G.L.I.T. tests a circuit when it is hot. Drawing its power from the actual circuit under test, G.L.I.T. electronically simulates a fault condition in the line-ground circuit, causing a fault current (short) to flow through the circuit at about 20 amperes for 1/25 of a second. This fault current is of such short duration that it will not actuate the overcurrent protection. The current flow is then measured electronically, and the results indicated in ohms on the scale.

Ideally, the ground path should permit five times the rated current to flow. In a 20 amp. circuit, for example, 5 x 20 amps. = 100 amps; 120 volts ÷ 100 amps results in 1.2 ohms as the permissible impedance. Using this simple formula, the G.L.I.T. indicates immediately if the ground impedance is adequately low.

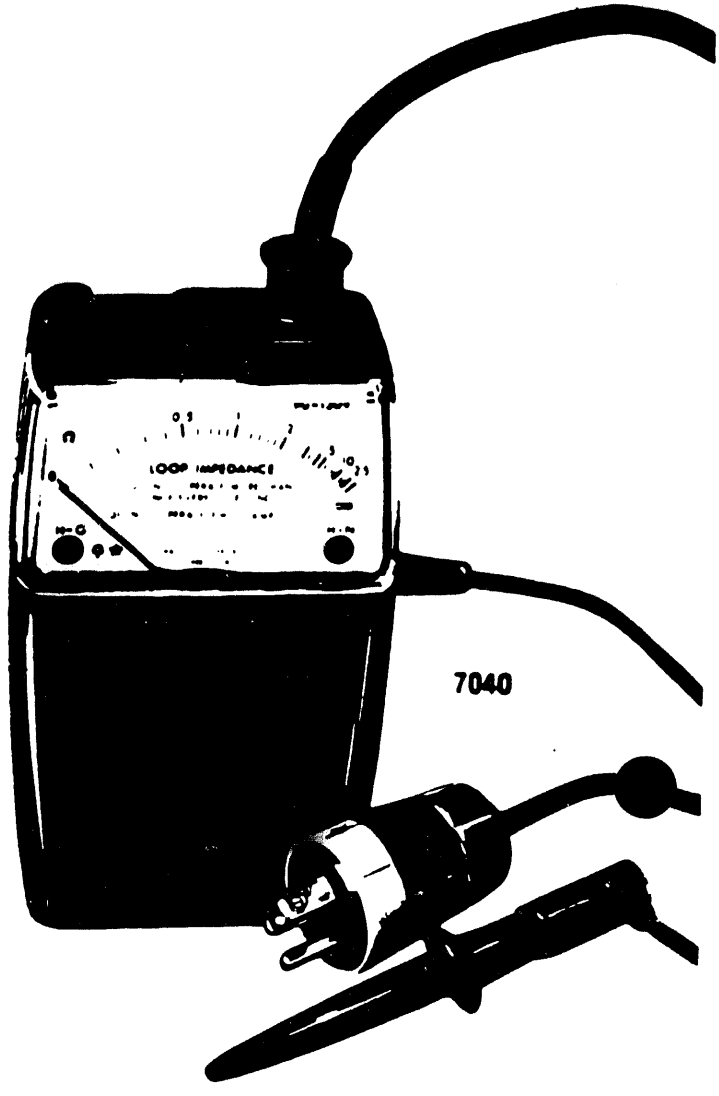

- INSULATED
- DUSTPROOF
- COMPACT
- SHOCK RESISTANT

SPECIFICATIONS

- **Construction:** Shock resistant taut band suspension meter in an ABS plastic case, specially designed for portable use.
- **Voltage Range:** 90 to 130 V. AC. 50/60 cycles Hz.
- **Test Current:** Approx. 21 amps with a loop impedance of 1 ohm at 120 V.
- **Size:** 5" x 3¼" x 2"
- **Weight:** 2 lbs.

Complete with carrying case and instruction book.

Also provided with plug-in test probe to check grounding of conduit, outlet boxes, portable tools, machine tools, piping systems or other grounded equipment.

DESCRIPTION	CATALOG NO.
Ground Loop Impedance Tester, complete with carrying case, instruction book	7040
Replacement Test Probe	40-9050

TO HELP MAINTAIN AN ASSURED EQUIPMENT GROUNDING PROGRAM...
TO CONDUCT REGULAR ELECTRICAL MAINTENANCE SAFETY CHECKS...

INDEX **PAGE**

Receptacle Circuit Tester, GFI Receptacle Tester, Tool Ground Continuity Tester	E 1
METROHM Insulation Resistance and Continuity Tester	E 2
G.L.I.T. Ground Loop Impedance Tester	E 3
Receptacle Tension Tester	E 4

RECEPTACLE CIRCUIT TESTER

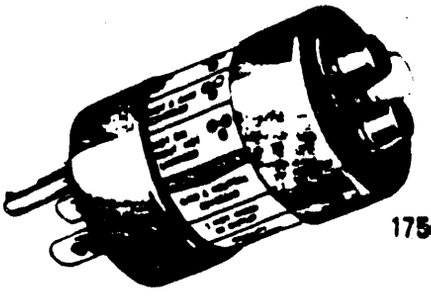

1750

The Woodhead "SAFETY YELLOW" Receptacle Circuit Tester, with a simple arrangement of neon indicator lights (red, yellow, and white), provides a convenient means for testing 3 wire, 115 volt a.c. single phase polarized receptacles for proper connection of ground wire, correct polarity, or fault in any of the three wires.

Simply plug unit into receptacle. The combination of lights indicates the existing condition, as shown on chart. This chart is a permanent part of the tester unit.

Circuit Tester supplied with U-blade plug. To check other installations, use in combination with Safeway Adapters.

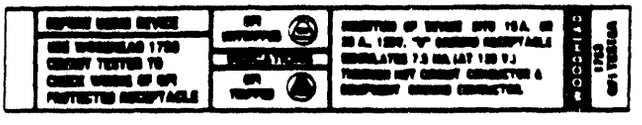

GFI RECEPTACLE TESTER

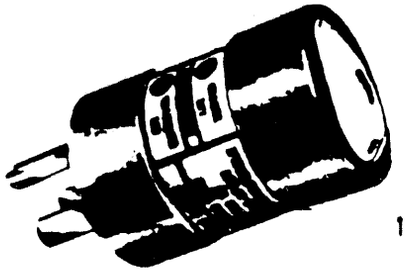

1753

The GFI Receptacle Tester should be used in conjunction with the catalog No 1750 Circuit Tester, to determine if a given receptacle is protected by a properly operating GFI.

First, check wiring of receptacle with the No 1750. If wiring is OK, plug the No 1753 GFI Tester into the receptacle. The device will circulate 7.5 milliamperes (±5%) at 120 V through the hot ungrounded circuit conductor and the equipment grounding conductor, and should trip a normally functioning GFI, set at the 5 ma. level generally accepted.

The device has a face illuminated by a neon lamp which will remain lit as long as the receptacle is energized. If the lamp goes out, your GFI is operating properly. If the lamp remains lit, GFI is not functioning.

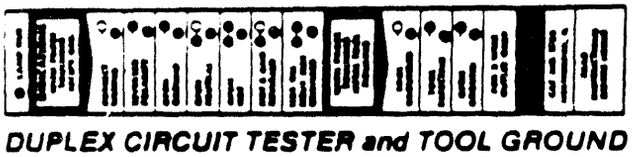

DUPLEX CIRCUIT TESTER and TOOL GROUND CONTINUITY TESTER

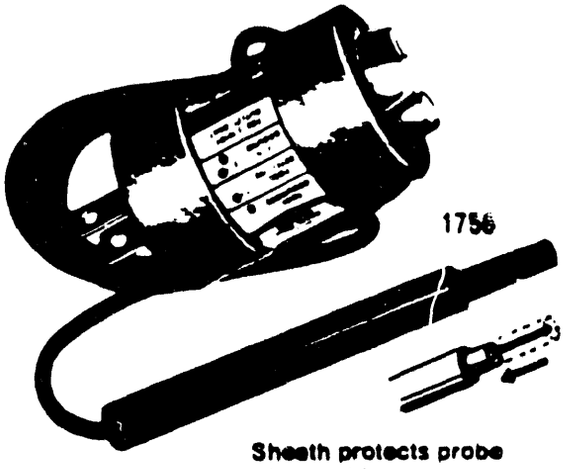

1756

Sheath protects probe when not in use

The No 1756 is another easy-to-use Woodhead plug-in indicator. It is not a comprehensive diagnostic instrument, but can be used to check duplex receptacle circuits, and to determine grounding conductor continuity between the non-current carrying metal parts of a tool, and the grounding blade of its power cord plug.

To use the Tester is plugged into a grounded duplex receptacle to check the condition of the wiring. If no discrepancies are indicated, the test proceeds, to check the grounding continuity of a power tool.

DESCRIPTION — For use on 115 volt A.C. single phase circuits.	CATALOG NO.
Circuit Tester to check U-Blade Receptacle (NEMA #5-15) (Und. Lab. Listed)	1750
Circuit Tester to check Locking Receptacle (NEMA #L5-15)	1752
GFI Tester to check U-Blade Receptacle (NEMA #5-15)	1753
Tool Ground Continuity Tester (NEMA #5-15 Receptacle)	1756

Other types of receptacles can be tested by using SAFEWAY® ADAPTERS See Section D of catalog

AC VOLTAGE DETECTORS

TIC TRACERS™

TIF100 AC VOLTAGE DETECTOR:
The basic electricity detector no electrician can afford to be without. This easy-to-use instrument safely detects AC Voltage without breaking into power lines or making any electrical connections. An audible computer-like beeping signals when the TIF100 approaches live voltage. Excellent for its safety value alone. But also excellent for checking fuse panels (without removing fuses), breaker panels, outlets and switches; determines live and dead wiring; locates breaks in insulated wires and heating elements; and checks for properly grounded power tools and appliances.

TIF300CC AC VOLTAGE DETECTOR:
The TIF300CC does everything the TIF100 does plus it checks continuity up to 25,000 ohms. It also checks capacitors from one microfarad and up.

TIF300HV HIGH/LOW AC VOLTAGE DETECTOR:
High voltage ranges include: 1,500 to 122,000 volts. Low voltage ranges include: 25 to 1,500 volts. Adaptable to hot stick.

- ELECTRICAL
- AIR CONDITIONING/ REFRIGERATION

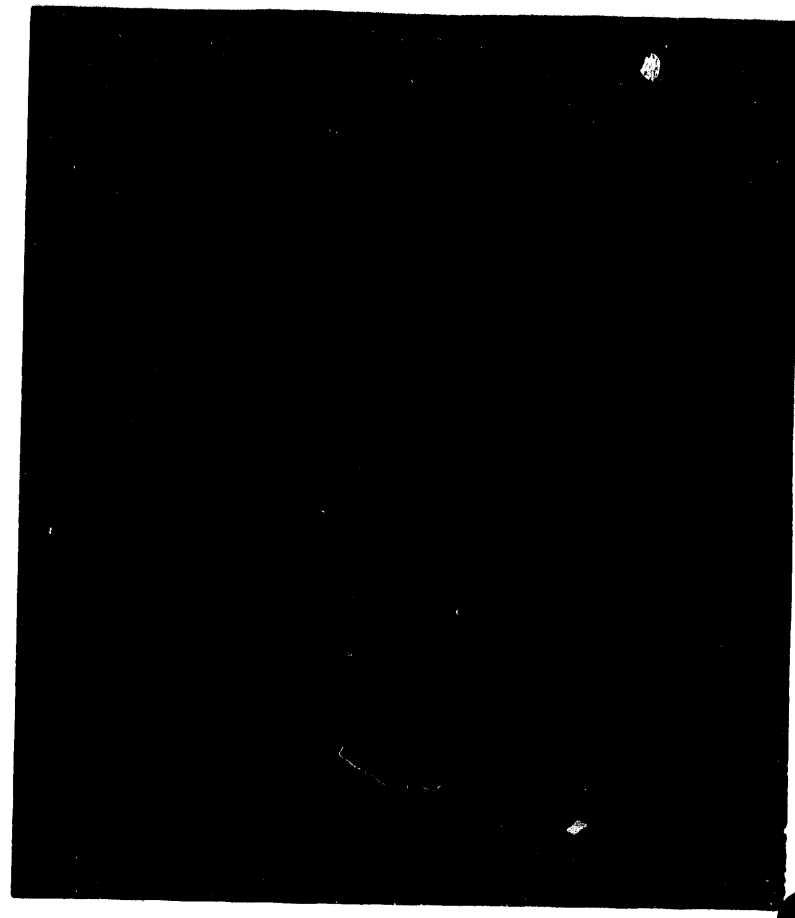

FEATURES

- Connectionless AC voltage detector
- Capacitor checker
- Continuity checker
- Audible beeping signal
- Visual signal (TIF300HV)
- Adaptable to hot stick
- Hand-held
- Made in the U.S.A.

SPECIFICATIONS

TIF100
Range:
25 volts to 1,500 volts

TIF300CC
Range:
25 volts to 1,500 volts

Charging Rate
1 Mfd. per sec

TIF300HV
Low Range:
25 volts to 1,500 volts
High Range
1,500 to 122,000 volts

COMMON SPECIFICATIONS

Operating temperature
35° to 100° F (0-38° C)

Battery Life
Approximately battery shelf life

Weight with case
12 ounces/340 grams

Dimensions including probe
8.5" x 3.75" x 1"
21.59cm x 9.53cm x 2.54cm

REPLACEMENT PARTS AND OPTIONAL ACCESSORIES

TIF100
Carrying case Part #TIF301CC

TIF300CC
Test leads Part #TIF301CC
Carrying case Part #TIF302CC

TIF300HV
Carrying case Part #TIF303HV
Hot Stick Part #TIF310

U.S. Patent #3,621,392

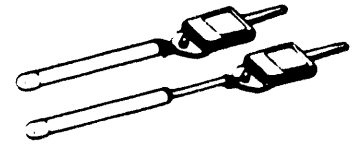

COLLAPSIBLE HOT STICK
(Detector not included. Part #TIF310)

TIF INSTRUMENTS INC

9101 NW 7th Avenue
Miami Florida 33150
Phones (305) 757-881
Telex 264284

Model 7100A Ground Chek™

ecos®

THE GROUNDING PEOPLE

- Determines impedance on equipment grounds
- Determines impedance of neutral conductor *
- Tests 120, 208 and 240VAC receptacles and equipment *
- Accurately determines wiring error
- Tests grounding of tools and hardwired equipment*
- Tests GFCI's for tripping
- Automatic and pocket sized

7100A GROUND CHEK™ TESTS IN SECONDS!! Satisfies N.E.C. Requirements

The 7100A GROUND CHEK is a unique, low cost instrument that automatically indicates ground impedance and checks for 7 different wiring errors on 120VAC 2 or 3 wire grounded systems. These tests are accurately made regardless of the circuit reactance or length of wire run.

GROUND CHEK does not require that other equipment be disconnected from the circuit under test to obtain accurate test results.

APPLICATIONS

GROUND CHEK is ideal for testing standard 120, 208 and 240VAC circuits, receptacles and hardwired equipment. It can also be used to test GFCI protected branch circuits and equipment.

* probe required

Solid-State Reliability and Accuracy!

GROUND CHEK is the ideal electrical testing tool for use by electricians, inspectors, safety personnel and electrical/electronic equipment field maintenance and installation technicians.

OPERATION

Plug or connect GROUND CHEK into any live 120/208/240VAC cord set or receptacle. The 3 wiring lamps indicate correct wiring or wiring errors if they exist. If wiring is correct, a unique circuit automatically injects current pulses into the grounding path. The ground lamp indicates ground impedance. A "STEADY-ON" ground lamp indicates impedance is less than 2 ohms. A FLASHING or OFF ground lamp indicates ground impedance is over 2 ohms. The operating instructions are printed on the instrument, and a operating manual is supplied with the instrument.

Model 7106

Accu-Test™

ecos®

THE GROUNDING PEOPLE

- **Detects Isolated Ground Shorts***
- **Detects Neutral to Ground Shorts**
- **Detects Neutral/Ground Reversals***
- **Determines Impedance of Equipment Grounds**
- **Determines Impedance of Neutral Conductor***
- **Tests Grounding of Terminals, Tools and Hardwired Equipment***
- **Test all 120, 208 and 240VAC 1 ø Receptacles and Equipment**
- **Automatically performs Voltage Test**
- **Accurately Determines Wiring Errors**
- **Tests GFCI's for tripping**

Solid State Reliability and Accuracy!
Satisfies N.E.C. Requirements

7106 ACCU-TEST™ TEST IN SECONDS!!

Undetected Neutral Ground Shorts and Reversals, High impedance equipment grounds and wiring errors, cause serious equipment operational and personnel safety problems. ACCU-TEST is the second generation of ECOS electronic tools designed to accurately and quickly detect these hazards and problem conditions.

FEATURES

Electronic ACCU-TEST is the first tester to detect ISOLATED GROUND SHORTS, NEUTRAL TO EQUIPMENT GROUND SHORTS AND REVERSALS, AND MEASURE THE IMPEDANCE QUALITY OF THE NEUTRAL AND EQUIPMENT GROUNDING PATHS ... a significant break-through in the elimination of electronic equipment operational problems and electrical shock hazards. ISOLATED (DEDICATED) GROUND SHORTS, NEUTRAL TO GROUND SHORTS AND REVERSALS are easily pinpointed. Ground impedance measurements are automatically determined as being over or under two ohms.

In additional to these unique features, ACCU-TEST also accurately detects all common AC systems and equipment wiring errors regardless of circuit reactance or length of wire run. ACCU-TEST does not require that other equipment be disconnected from the circuit under test to obtain accurate test results.

APPLICATIONS

ACCU-TEST is ideal for testing standard 120/208, 120/240VAC, 1 ø circuits, receptacles and hardwired equipment. It can also be used to test GFCI protected branch circuits and equipment.

ACCU-TEST is the ideal electrical testing tool for use by electricians, inspectors, safety personnel and electrical/electronic equipment field maintenance and installation technicians.

OPERATION

Plug or connect ACCU-TEST into any live 120VAC or 208/240, 4 wire, 1 ø receptacle or circuit. By following the simple test sequence, the tester will indicate: line voltage level, existence of any wiring errors, isolated ground shorts, neutral to ground shorts, neutral to ground reversals and impedance level of the equipment grounding path and neutral conductor

90VAC to 275VAC 50 Hz testers for foreign application are also available as Model 7106E.

ACCU-TEST is available with options for testing hardwired machines and various twist lock and other receptacle configurations up to 60 Amps

* probe required

EXTEND TESTING CAPABILITY WITH THESE OPTIONS...

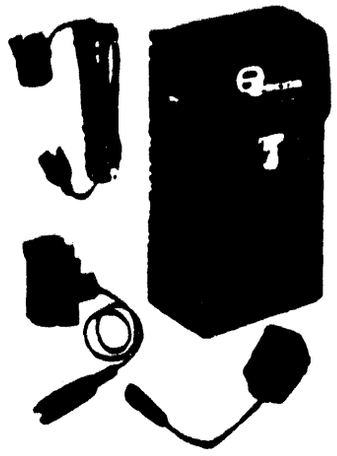

Model TP-2 Test probe kit provides the 7106 with a full range of testing capability . . . and a case to keep it in.

TP-2 INCLUDES:

- 7552 12" Power cord extension w/clips
- 7561 Neutral/Ground reversal probe
- 7562 Isolated (dedicated) ground probe
- 7563 36" Mini extension cord
- 7564 Neutral impedance adaptor

7706 Deluxe carrying case for 7106 and probes

MODEL AK-1 ADAPTOR KIT

Tests most common 1 ϕ, 3 wire NEMA configuration receptacles.

AK-1 Includes:

AL5-15	120V, 15A Locking	A5-30	125V, 30A
AL5-20	120V, 20A Locking	AL5-30	125V, 30A Locking

Carrying Case

Other NEMA Adaptors available to test:

A5-50	125V, 50A	A14-30	125/250V, 30A*
A14-20	125/250V, 20A*	AL14-30	125/250V, 30A Locking*
AL14-20	125/250V, 20A Locking*	A14-50	125/250V, 50A*
A14-60	125/250V, 60A*		

* Model 7552A Adaptor Interconnect is required for NEMA 14-20 thru 14-60 configurations

USE OF TEST PROBES

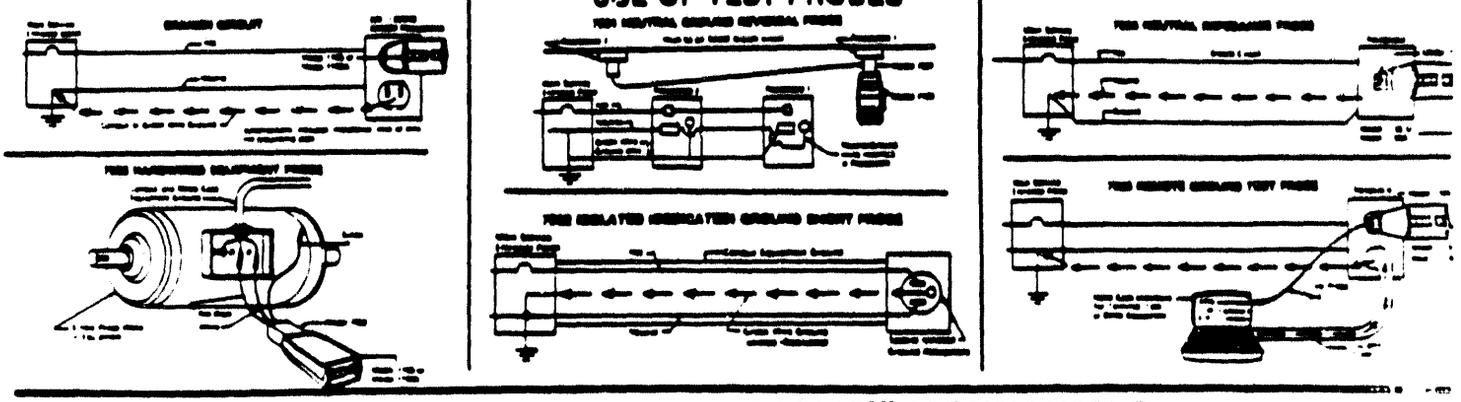

MODEL 7106 ACCU-TEST™ SPECIFICATIONS

ELECTRICAL:	120VAC 2 or 3 wire 1 ϕ; 208/240VAC 4 wire 1 ϕ; Termination is NEMA 5-15 plug. Power requirements are 4 watts at 120VAC.
SIZE:	Case Height 5-7/8" (15.0 cm.) x Width 2-3/8" (6.1 cm.) x Depth 1-1/4" (3.2 cm.).
MATERIAL:	Black injection molded textured high impact Noryl plastic case. Flame retardancy 94VO per UL/CSA. Solid State Circuitry.
WEIGHT:	5.5 oz. (0.16 kg.).
LABEL:	Permanent mylar coated instructions on instrument.
INSTRUCTIONS:	POCKET SIZE INSTRUCTION BOOKLET INCLUDED
VOLTAGE DETECTED:	Indicates greater or less than 105VAC on line.
WIRING ERRORS DETECTED:	Reverse polarity, open ground, open neutral, open hot, hot and ground reversed, hot or neutral with hot terminal unwired, 2 hots on outlet.
GROUND IMPEDANCE TEST:	Impedance is detected by injecting current pulses into grounding path. Tester is calibrated to detect greater or less than 2 ohms of impedance.
GFCI TEST:	GFCI is tested for tripping at receptacle.
ISOLATED (DEDICATED) GROUND SHORT TEST:	Tests for existence and integrity of isolated ground using probe Model 7562.
NEUTRAL IMPEDANCE TEST:	Using Probe Model 7564, instrument measures impedance of neutral conductor.
WIRING ERRORS/GROUND IMPEDANCE TESTS ON 208/240 VAC 1 ϕ, 4 WIRE SYSTEMS:	Using ECOS NEMA type adaptors, wiring errors, ground and neutral impedance can be measured.
WIRING ERRORS/GROUND IMPEDANCE TESTS ON HARDWIRED EQUIPMENT:	Using ECOS Probe Model 7552, wiring errors and ground/neutral impedance can be measured on hardwired 120/208/240VAC equipment
REMOTE GROUND IMPEDANCE TEST:	Using ECOS Probe Model 7565, ground impedance on cord connected or fixed equipment can be measured.
NEUTRAL GROUND SHORT:	Determines if N-G shorts exists at any point in circuit in addition to main service equipment.
NEUTRAL GROUND REVERSAL:	Using ECOS Probe Model 7561, determines if N and G are reversed between any two receptacles on the same branch circuit.
AVAILABLE FOR WORLDWIDE USE:	90VAC to 275VAC, 50 Hz testers for all foreign applications are also available as Model 7106E.

AC voltage detection without connections.

Senses voltage electrostatically without wire contact. The necessary tool for everyone involved with electrical systems.

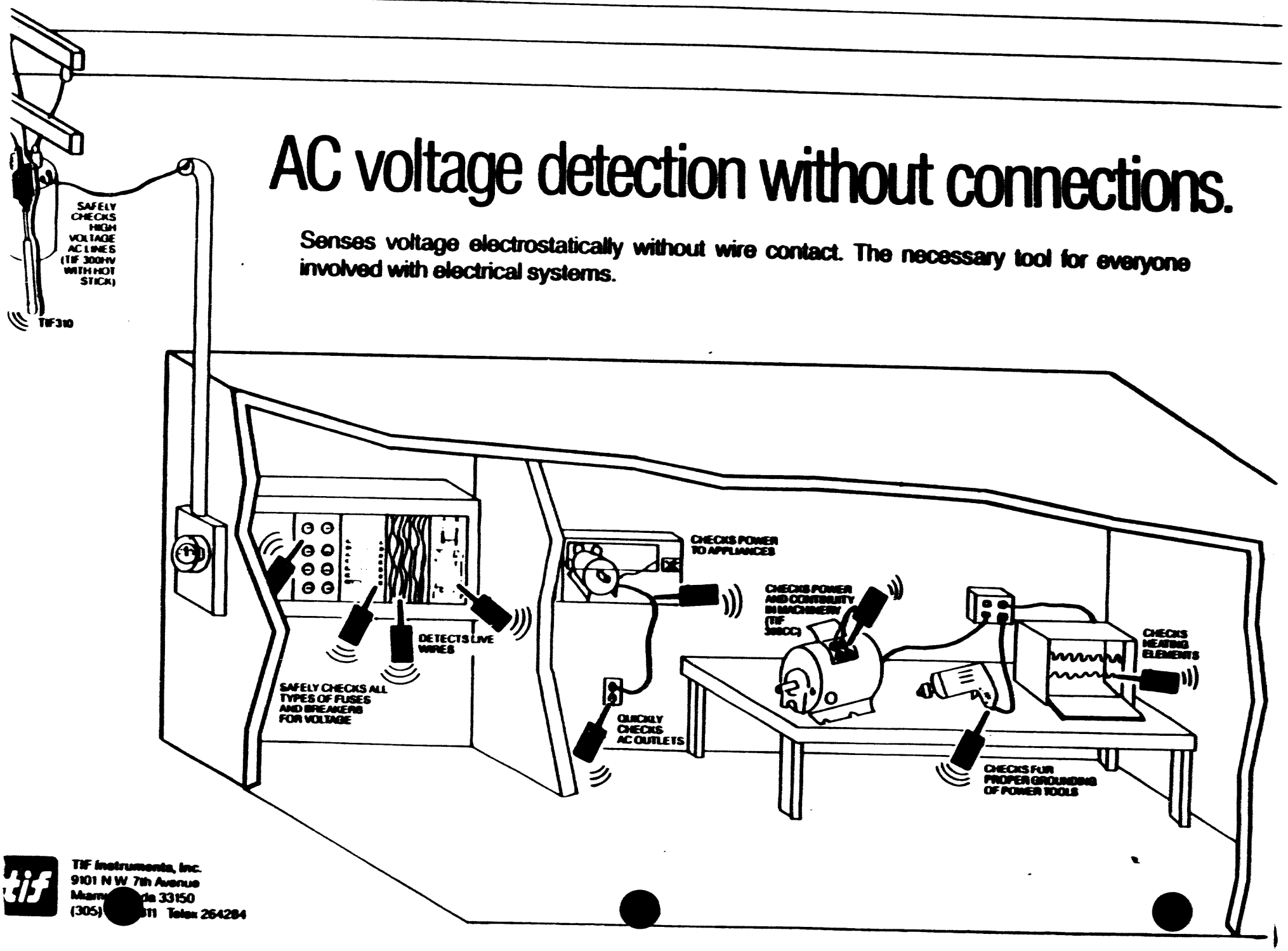

TIF Instruments, Inc.
9101 N.W. 7th Avenue
Miam[redacted]da 33150
(305)[redacted]11 Telex 264284

Appli tions of the TIF Tic Tracer touchless voltage detector

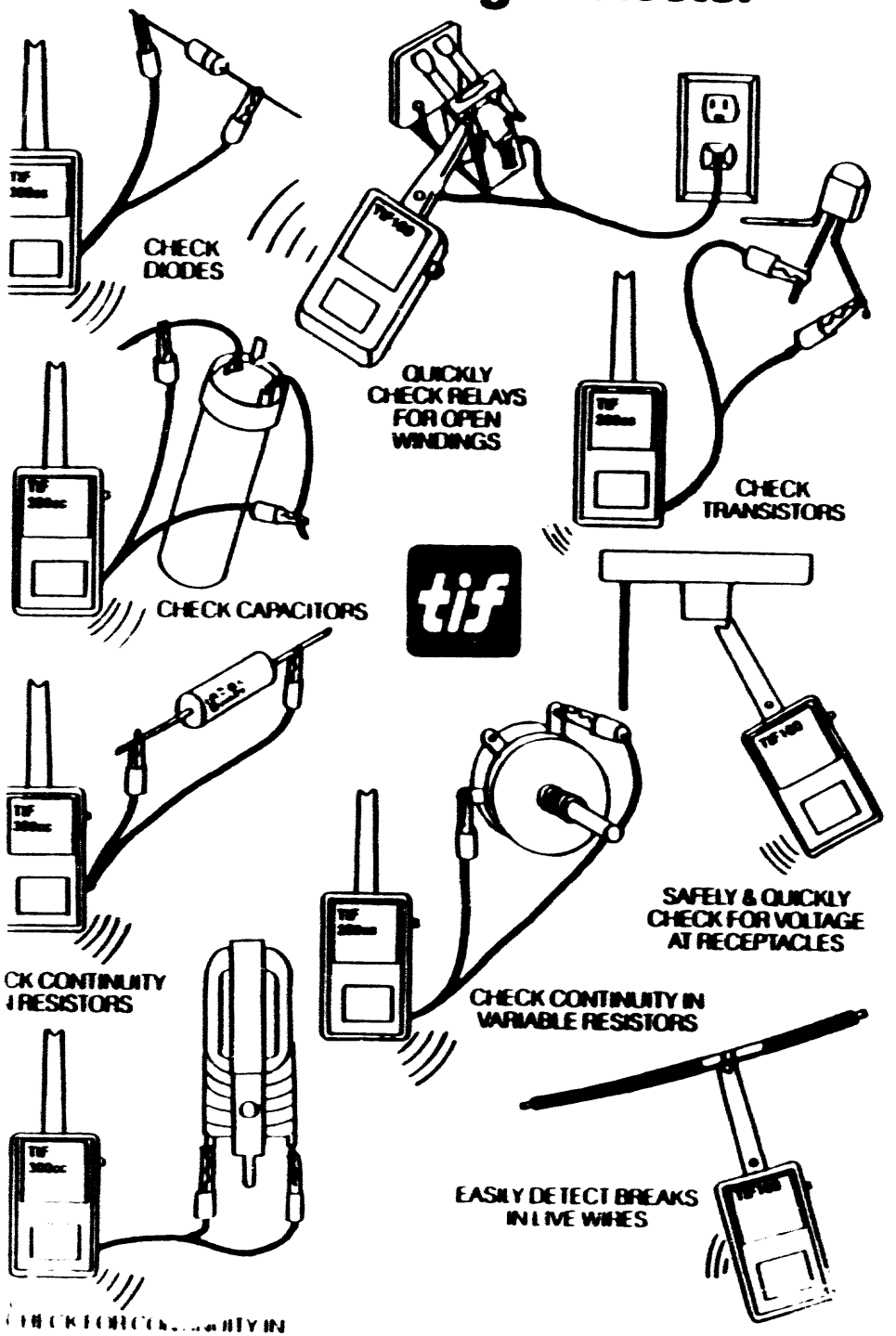

Applications of the tif Tic Tracer touchless voltage detector

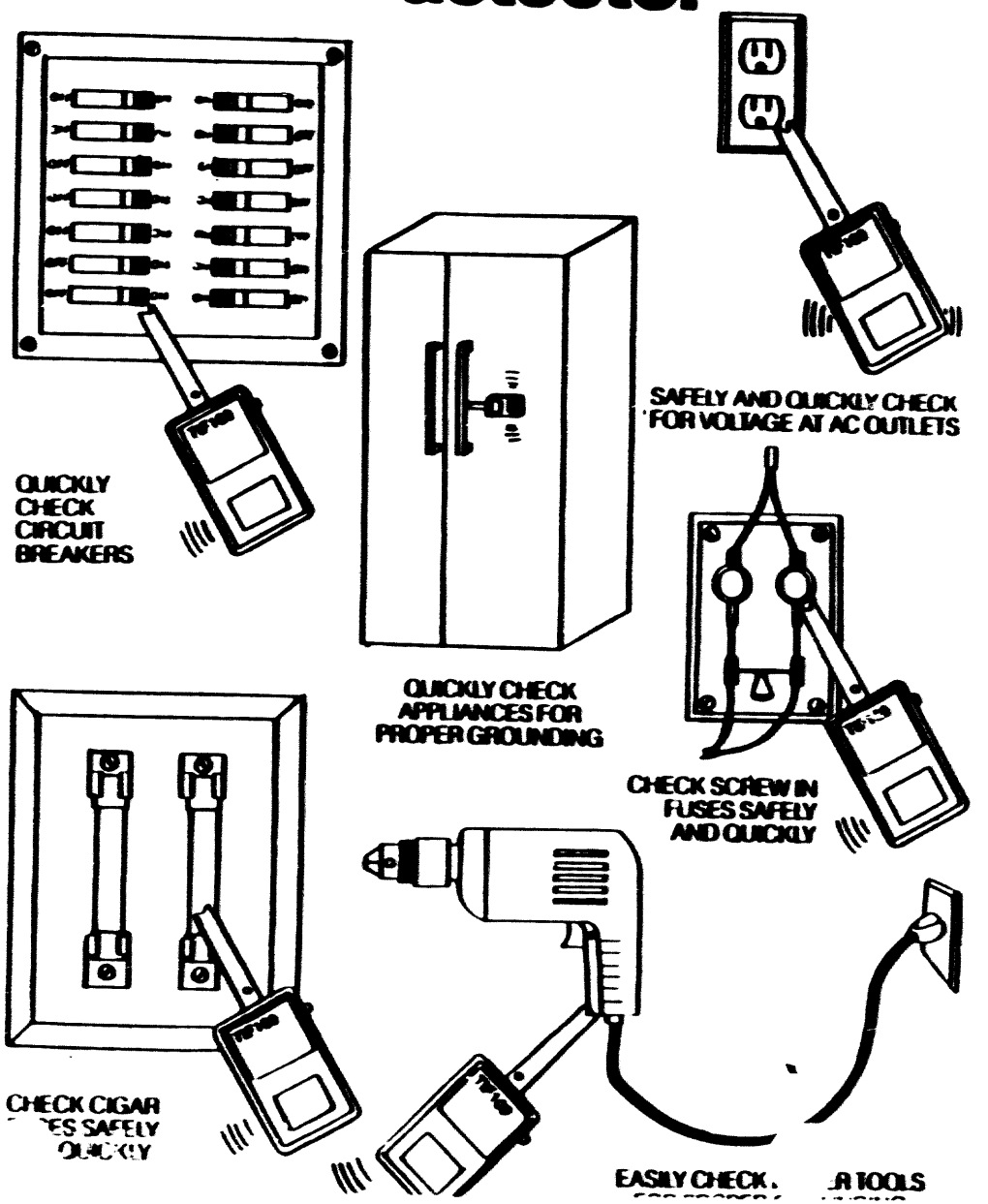

LIGHT ON IF THERE IS
VOLTAGE POTENTIAL
BETWEEN *HOT & NEUTRAL*

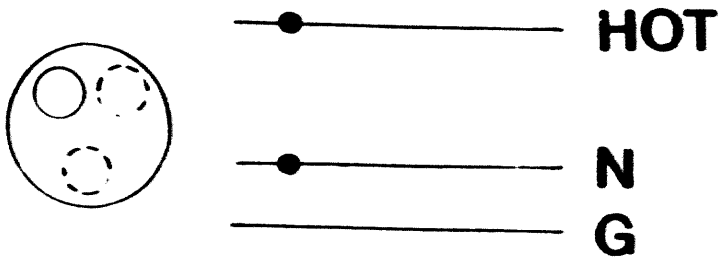

LIGHT ON IF THERE IS
VOLTAGE POTENTIAL
BETWEEN *HOT & GROUND*

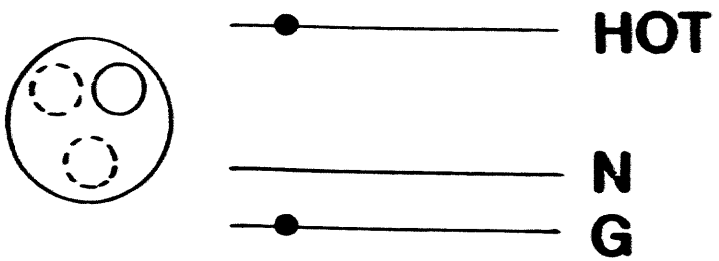

LIGHT ON IF THERE IS
VOLTAGE POTENTIAL
BETWEEN *NEUTRAL & GROUND*

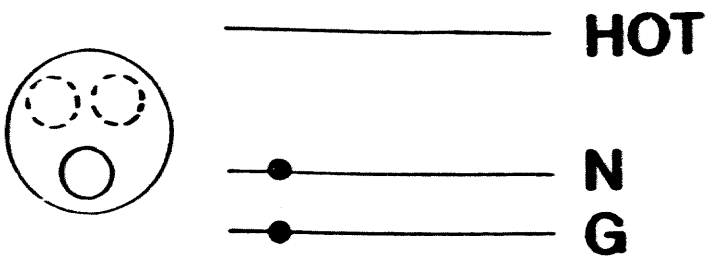

⊗ Indicates light is on

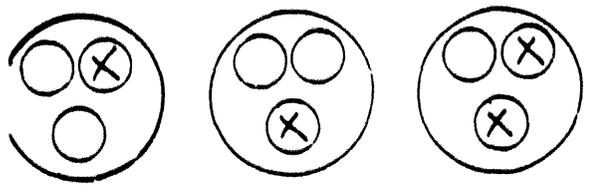

Possible HOT on GROUND

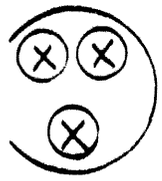

Ground is HOT; possible 220 V or more

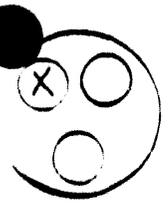

Missing ground; possible reverse polarity

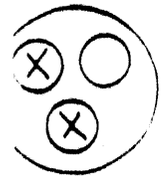

Reverse polarity

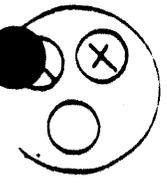

OK

How A House Works

ELECTRICAL SAFETY AT A BARGAIN PRICE

While brushing your teeth each night, perhaps you've noticed a slightly odd receptacle in the wall near the bathroom sink, the one with the tiny buttons that say "test" and "reset." This device is a GFCI, the mysterious acronym for a small package of electronic genius that adds an entirely new level of electrical safety to our homes.

GFCI stands for "ground fault circuit interrupter," a mouthful of jargon that almost everyone avoids, preferring the acronym. Researchers developed GFCIs about 20 years ago to solve a serious problem. Homeowners often received potentially dangerous electrical shocks while in damp or wet areas of their homes and yards.

Part of the problem was moisture itself. Dampness in the soil or in concrete resting upon the soil makes both surfaces very good electrical conductors. So if you touch an electrically charged (hot) wire while standing on soil or concrete in bare feet, electricity will flow right through you and into the ground, shocking you in the process.

The other part of the problem was the plumbing system. Most fresh water comes to our homes in metal pipes, and drain systems are often metal too. Both enter the house underground, so they offer a perfect grounding path for electricity. If you touch a metal faucet or sink while holding a faulty electrical appliance, you could get a shock. And of course, the potential for getting shocks has risen with the wave of new hand-held electrical appliances that we use in the kitchen, bathroom, basement and outdoors.

Now GFCIs reduce the danger. Yet as commonplace and valuable as they are, most of us don't have a clue how they work. In this article, we'll open up a GFCI to see how it operates and point out where to install them.

A GFCI'S ROLE

Fig. A illustrates the scenario for a

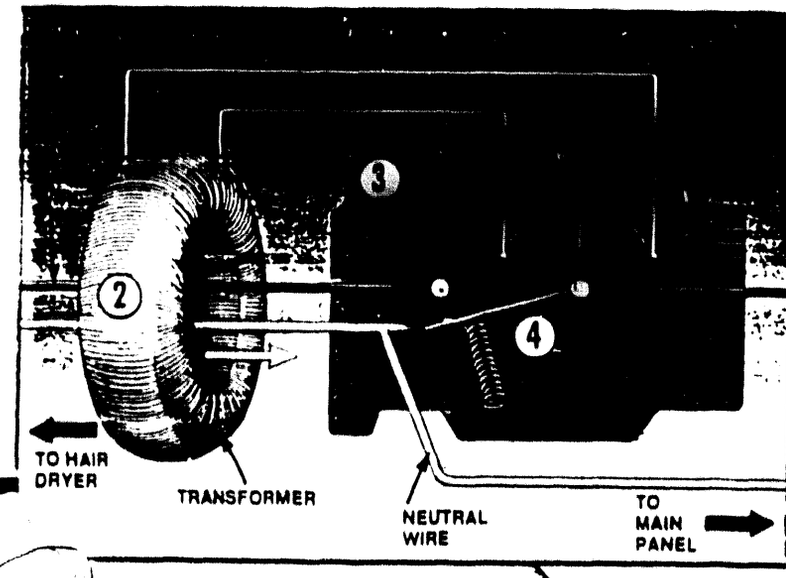

(1) A BARE, HOT WIRE "grounds" to the metal plumbing system (faucet) either through soapy water or through your body when you touch the bare wire with one hand and the faucet with the other. (2) The current lost through this "leak" increases the flow of current in the hot wire. (3) A transformer senses the difference in current between the hot and neutral wires. (4) When the difference reaches .005 amp, a switch opens the circuit and stops the flow.

FIG. A HOW A GFCI WORKS

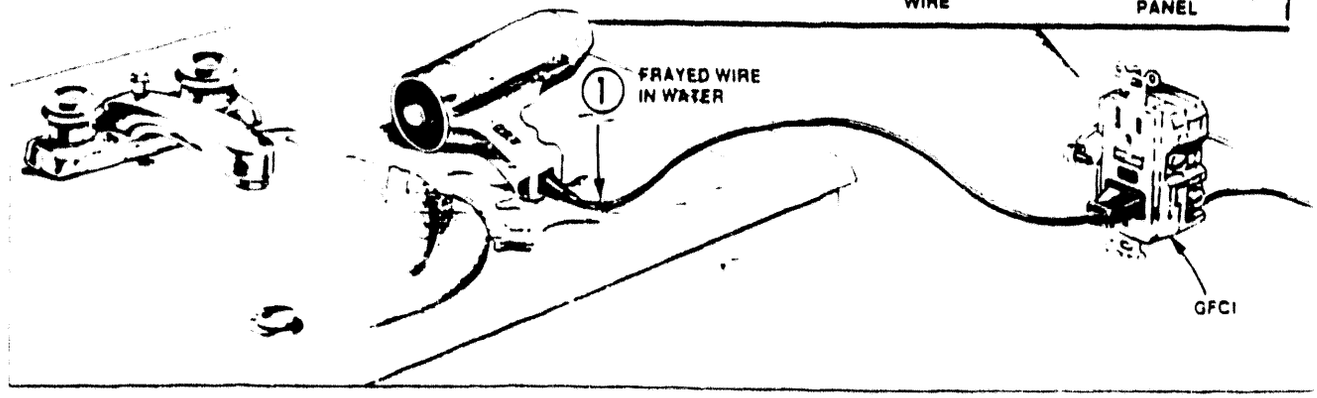

FIG. B REQUIRED GFCI LOCATIONS IN A HOME*

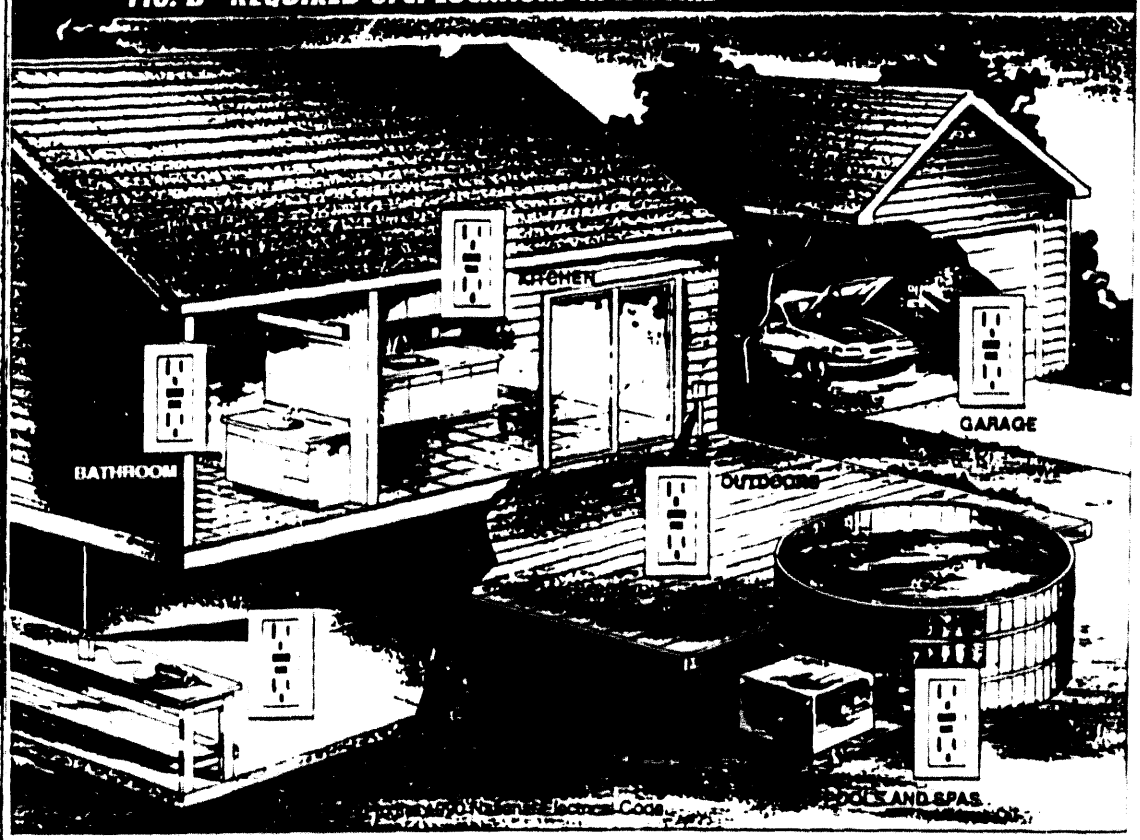

dangerous shock. With one hand you pick up the hair dryer to move it away from the sink, while at the same time you shut off the water faucet. In lifting the hair dryer, you accidentally touch an exposed live (hot) wire in the frayed cord near the handle. An electric current immediately flows from the cord through your body, through the plumbing system, and eventually to the earth.

Meanwhile, the circuit breaker in the main panel might never shut off the electricity, nor will a fuse burn out. Circuit breakers react when too much current flows through them, enough to overheat the wires, melt the insulation, and perhaps cause a fire. Their job is to protect the wires, not you.

In contrast, a GFCI instantaneously senses misdirected electrical current, and reacts within 1/40th of a second to shut off the circuit before a lethal dose escapes. This process explains the ground fault circuit interrupter's name. Unintended current leakage from an electrical circuit is called a "ground fault." Upon sensing the ground fault, the device "interrupts" the circuit by switching it off.

HOW A GFCI WORKS

A look inside a GFCI receptacle (Fig. A) shows how the device senses an electrical leak. Normally, the currents passing through both the hot and neutral wires are equal, though they travel in opposite directions. The doughnut-shaped transformer senses both currents, but since they're equal and opposite, their effects cancel each other out. However, when some current "leaks" out, through a worn cord or a faulty power tool, the current through the hot wire will be larger than through the neutral. The transformer immediately senses this imbalance. When the difference exceeds .005 amphere (an amphere is a measure of current; for instance an electric drill usually runs on 5 amps), a switch inside the GFCI reacts and "breaks" the circuit, shutting it down instantly.

If you happened to cause the imbalance by touching a frayed wire or holding a bad electric tool, for example, you might feel a light shock, that initial .005 amp of current before the GFCI reacts. Engineers didn't pull that figure out of thin air. It takes about .005 amp of current passing directly through the human heart to stop or scramble its steady beat. So this is the limit at which GFCIs are set. (Fortunately, electrical shocks rarely pass directly through the heart, so even powerful shocks aren't always fatal.)

To make sure a GFCI works, manufacturers added the "test" and "reset" buttons that you see on the face of a receptacle. Pushing the test button creates a small electrical fault, which the GFCI circuitry should sense and immediately react to by shutting off the circuit. The reset button restores the circuit. Test your GFCIs weekly and replace them if they don't function properly.

WHERE TO PUT GFCIs

GFCIs have a relatively short history in the National Electrical Code. The 1971 code initially required them on the circuitry controlling the lights and other electrical equipment for swimming pools. The 1971 code also listed deadlines for including GFCIs in outdoor locations (1973) and around construction sites (1974). The 1975 code followed up and included GFCI receptacles in bathrooms.

Initial GFCI locations were undoubtedly limited to the most dangerous areas by the relatively high price of the device, about $25. However, as the price dropped to below $10, the cost became insignificant compared to the safety gained. More recent codes expanded GFCI use (Fig. B). The 1990 code

requires GFCI protection for readily accessible receptacles located outdoors, in garages, in crawl spaces and unfinished basements, and above the countertop within 6 ft. of a kitchen sink. Code officials intended these rules to protect the users of portable power tools and hand-held kitchen appliances from receiving shocks in these damp, high-risk areas.

Incidentally, the code treats spas, hot tubs and Jacuzzis like swimming pools. Receptacles, lights and electrical equipment within a certain distance of pools all require GFCI protection.

YOU CAN SAFELY substitute a GFCI for an older, two-prong outlet even if the wiring doesn't have the third equipment ground wire. You can also wire three-prong receptacles to the GFCI without an equipment ground wire.

FIG. C WIRING A GFCI WITHOUT AN EQUIPMENT GROUND WIRE

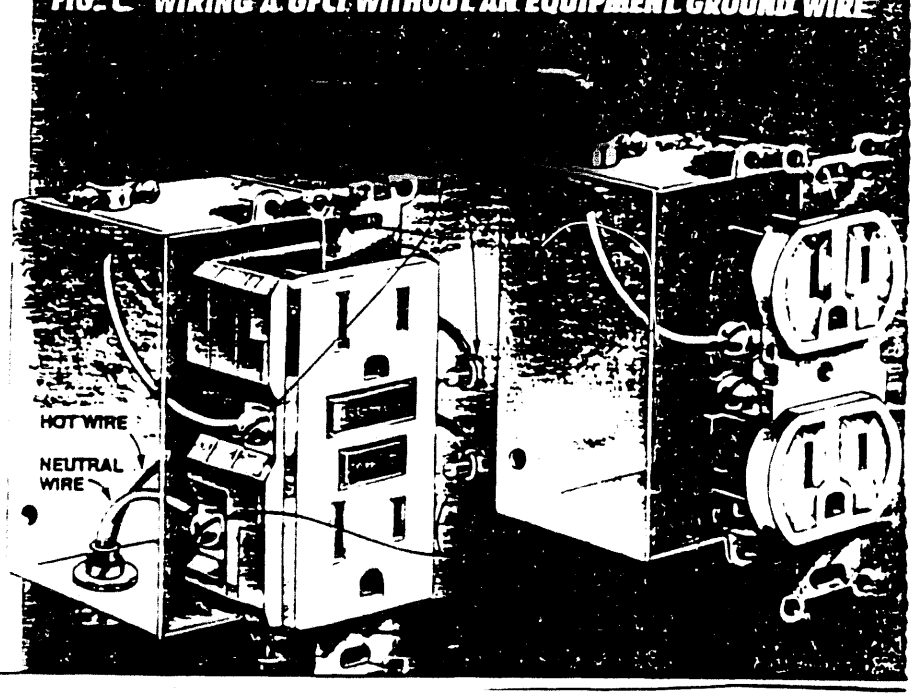

How A House Works

A GFCI BONUS

GFCIs can be especially useful when you want to update an older electrical system and make it safer. Home electrical systems installed since about 1962 have a third wire running alongside the hot and neutral wires, called an "equipment ground wire," which is either bare copper or covered by green insulation. Don't confuse this ground wire with the more general term "ground" in "ground fault." The third, round blade on a three-prong plug and the third hole in a standard receptacle represent this wire. But older wiring systems usually do not have an equipment ground wire (unless they were updated), and have receptacles with only two slots. So you can't plug three-prong plugs into those older two-slot receptacles, which is a big inconvenience.

What's more, by code you cannot replace two-slot receptacles with the standard three-prong grounded type, unless you also install the third ground wire. Tearing out walls and ceilings to put that third wire in is rarely worth the cost and trouble.

However, you *can* replace an old two-slot receptacle with a three-slot GFCI, *even though you don't have a ground wire.* The GFCI will protect the circuitry and detect current leaks even better than the ground wire, and it will shut off the circuit should a problem arise. This is a handy way to update an older system safely and inexpensively.

The code even allows you to connect other ungrounded receptacles to the GFCI (Fig. C). So you can go ahead and replace other two-slot receptacles with the standard three-slot, as long as you connect them properly to the original GFCI and don't add any ground wires.

Installing a GFCI is almost as easy as installing a regular receptacle. First, turn off the circuit breaker or fuse at your main electrical panel that supplies the receptacle. The GFCI has two pairs of terminals (screws on some and wires on others). One pair is labeled "load" (Fig. C), which you connect to the wires coming from the main panel: white (neutral) to the silver terminal; and black (hot) to the brass terminal. Use the other pair of terminals, labeled "line," to connect other standard outlets to the GFCI.

However, a GFCI requires more box space than a standard receptacle. So if the GFCI and its wires don't fit, be prepared to install a larger box.

As usual, be sure to obtain an electrical permit if you do your own work, so you can check the local codes with your electrical inspector and have your work inspected afterward.

— Duane Johnson

Art Direction • MARCIA WILLISTON
Illustrations • DON MANNES
Consultant • AL HILDENBRAND, MASTER ELECTRICIAN

SUBPART N: MATERIALS HANDLING AND STORAGE

PURPOSE

The purpose of this lesson is to acquaint the participant with regulations covering proper handling and storage of materials. The following standards are included: 29 CFR 1910.176-190 (Subpart N).

OBJECTIVES

1. State the hazards associated with servicing of multi-piece rim wheels, and any safety precautions which shall be taken to prevent injury during servicing of these wheels, per 29 CFR 1910.177.
2. State three periodic inspection requirements for overhead and gantry cranes, as per 29 CFR 1910.179 (j).
3. Explain four hazards associated with use of most cranes, and safety measures that can be taken to prevent these hazardous situations.
4. State two types of sling material, as well as two advantages of each material

REFERENCES

1. 29 CFR 1910 General Safety and Health Standards, Department of Labor
2. Accident Prevention Manual for Industrial Operations, Engineering and Technology, National Safety council, 1988.
3. Supervisors Safety Manual, National Safety Council, 1985.
4. ANSI B30.16 Hoists, American National Standards Institute

DURATION

Two hours

INSTRUCTOR MATERIALS

Course manual with instructors notes.
Slide Projector and Slides
Overhead projector viewer assembly
VCR/TV

Subpart N
Materials Handling and Storage

Objectives

1. State the hazards associated with servicing of multi-piece rim wheels, and any safety precautions which shall be taken to prevent injury during servicing of these wheels, per 29 CFR 1910.177.
2. State three periodic inspection requirements for overhead and gantry cranes, as per 29 CFR 1910.179 (j).

Objectives

3. Explain four hazards associated with use of most cranes, and safety measures that can be taken to prevent these hazardous situations.
4. State two types of sling material, as well as two advantages of each material

General Materials Handling

- 1910.176 (a)
- When mechanical handling equipment is utilized:
  - safe clearance is required for aisles, doorways, loading docks, etc
  - aisles and passageways shall be clear and in good repair
  - permanent aisles and passageways shall be marked appropriately

Secure Storage—1910.176(b)

- For secure storage of bags, containers, or bundles in tiers
  - stack
  - block
  - interlock
  - limit height

General Materials Handling

- 1910.176
  - (c) Storage areas shall be free from accumulated materials that may cause tripping, fire, explosion
  - (e) Clearance limits shall be posted
  - (f) Rolling railroad cars - derail or bumper blocks required on spur tracks
  - (g) Guardrails shall be provided for open pits, tanks, vats, ditches

Servicing Multi-Piece or Single Piece Rim Wheels

- 1910.177
  - Applies to the servicing of multi-piece and single-piece rim wheels used on large vehicles:
  - trucks
  - trailers
  - buses
  - off-road machines

Employee Training Program

- 1910.177(c)
  - Rim wheel training shall include:
    - hazards of servicing
    - proper handling
    - hands-on servicing
    - additional training to maintain proficiency

Hazards of Servicing Single Piece Rim Wheels

- Sudden release of pressurized air can occur from:
  - Breaking of bead
  - Bead slipping over the rim flange

Hazards of Servicing Multi-Piece Rim Wheels

- The sudden release of pressurized air causes the wheel components to separate from the rim wheel with violent force

Tire Servicing Equipment

- 1910.177(d) requires:
  - Barrier or restraining device
  - Proper air line assembly
  - Current charts or manuals for type of wheels serviced
  - Proper tools for type of rim wheels serviced

Powered Industrial Trucks—1910.178 (b)

Designations:	Diesel	Gas	Liquified Petroleum	Electric
Least Secure	D	G	LP	E
↓	DS	GS	LPS	ES
	DY			EE
Most Secure				EX

Trucks for Hazardous Locations

	DIVISION 1		DIVISION 2	
CLASS	HAZARD	TYPE TRUCK	HAZARD	TYPE TRUCK
I	Flammable gas or vapor normally present	EX	Flammable gas or vapor accidentally present	DS,GS ES,LPS
II	Explosive dust mixture	EX	Excessive dust mixture	DY EX
III	Ignitable fiber source processed	DY EX EE	Ignitable fiber source stored	DS,DY EE,EX ES,GS,LPS

13

Safety Guards—1910.178(e)

- Powered Industrial Trucks referred to as high-lift riders shall be fitted with overhead guards when overhead lifting is performed, unless operating conditions do not permit.
- Powered Industrial Fork Trucks shall be equipped with a vertical backrest extension, if carrying a load that may fall rearward.

Battery Charging and Storage Areas—1910.178(g)

- Battery charging & storage areas shall provide:
  - facilities for flushing and fire protection
  - adequate ventilation for fume dispersal
  - a conveyer, overhead hoist, or equivalent materials handling equipment for handling of batteries
  - a carboy tilter or siphon for handling of electrolyte

Additional Requirements

- 1910.178 (g)(7)
- When charging batteries, acid shall be poured into water; water shall not be poured into acid
- 1910.178 (g)(10)
  Smoking is prohibited in battery charging areas
- 1910.178 (g)(11)
  Other ignition sources shall not be present

Requirements for Receiving and Shipping Areas—1910.178 (k)

- Brakes of highway trucks shall be set and wheelchocks placed under the rear wheels to prevent rolling when boarded with powered industrial trucks
- Fixed jacks may be required to support a semitrailer during loading or unloading when not coupled to a tractor

Other Requirements

- Additional lighting is required on the truck where general lighting is less than 2 lumens per square foot
- Carbon monoxide levels shall be maintained less than the PEL of 35 ppm TWA or 200 ppm ceiling

Powered Industrial Trucks

- Truck Operations—1910.178(m)
- Traveling—1910.178(n)
- Loading—1910.178(o)
- Operation of the Truck—1910.178(p)
- Maintenance of Industrial Trucks—1910.178(q)

Overhead and Gantry Cranes—1910.179 (b)

- 1910.179 (b) applies to overhead and gantry cranes with trolleys and addresses:
  - Modifications
  - Wind indicators and rail clamps
  - Rated load marking
  - Clearance
  - Designated personnel

Overhead and Gantry Cranes—1910.179(c)

- Cab Location:
  - All operating handles shall be within convenient reach of the operator when facing the area to be served by the load hook, or the direction of cab travel.
  - The operator shall have a full view of the load hook in all directions.

Overhead and Gantry Cranes

- Cab Access shall be provided using:
  - A conveniently placed fixed ladder, stairs, or platform to the cab or bridge footwalk.
  - Bridge footwalks with toeboards and handrails. Floorwalks shall be of rigid construction and designed to sustain a distributed load of at least 50 pounds per square foot.

Overhead and Gantry Cranes—Cab Access

- No step or gap between a fixed ladder, stairs, or platform used as access to the cab or bridge footwalk shall exceed 12"—1910.179 (c)(2)
- Ladders shall be permanently and securely fastened in place, and in compliance with 1910.27–1910.179 (d)(4)(iii)

Stops, Bumpers, Rail Sweeps and Guards

- Trolley stops
- Bridge bumpers
- Trolley bumpers
- Rail sweeps
- Guards for hoisting ropes
- Guards for moving parts

Trolley Stops and Bumpers

- Trolley stops shall be provided at the limits of the travel of the trolley per 1910.179(e)(1)
- Bridge or trolley bumpers shall be provided unless the crane:
  - is not operated near the ends of bridge travel
  - travels at a slow rate of speed
  - is restricted and there is no potential for striking any object

Rail Sweeps

- Bridge trucks shall be equipped with rail sweeps which extend below the top of the rail and project in front of the truck wheels, per 1910.179(e)(4)

Guards for Hoisting Ropes

- Guards for hoisting ropes shall be installed to prevent contact between bridge conductors and hoisting ropes that could come into contact.

Guards for Moving Parts

- Guards for moving parts shall be provided for safety purposes. Parts to be guarded include gears, set screws, projecting keys, chains, chain sprockets.

Brake Requirements for Overhead and Gantry Cranes

- 1910.179(f) Brake requirements:
  - Self setting holding brakes
  - Control braking to maintain safe lowering speeds
  - Ample thermal capacity
  - Automatic

Electrical Equipment for Overhead and Gantry Cranes

- 1910.179 (g)
  - All wiring and electrical equipment shall comply with the applicable sections of Subpart S
  - Switches—1910.179(g)(5)
  - Runway conductors—1910.179(g)(6)

Hoisting Equipment

- 1910.179(h)
  - Sheaves
  - Ropes
  - Equalizers
  - Hooks

U-Bolt Requirements

- 1910.179 (h)(2)(v) requires that rope clips be attached with the U-bolts on the dead or short end of the rope
- Spacing and number of clips shall be in accordance with the manufacturer's recommendation

Inspection of Overhead and Gantry Cranes

- 1910.179(j) requires both:
  - Frequent Inspections—Daily to monthly intervals
  - Periodic Inspections—1–12 month intervals

Frequent Inspection Requirements

- 1910.179(j)(2) requires frequent inspection of:
  - All functional operating mechanisms
  - Lines, tanks, valves, drain pumps, and other parts of air or hydraulic systems
  - Hooks
  - Hoist chains
  - Rope reeving

Periodic Inspection Requirements—1910.179(j)(3)

- Deformed members
- Cracked sheaves and drums
- Pins, bearings, shafts, gears, rollers, locking & clamping devices
- Brake system
- Load and wind indicators
- Worn chain drive sprockets
- Electrical apparatus

Hazards of Overhead and Gantry Cranes

- Overloading
- Loads not well secured
- Loads not properly balanced
- Swinging of a load due to improper positioning of hook during attachment
- Loads carried over other personnel (particularly when a magnet or vacuum device is used)
- Lack of/or malfunctioning "limit switch"

Crawler Locomotive and Truck Cranes

- 1910.180 includes:
  - Crawler cranes
  - Locomotive cranes
  - Truck cranes
  - Wheel mounted cranes

Hazards Common to Most Cranes

- Powerline contact
- Overloading
- Outriggerfailure
- Two-blocking
- Pinchpoint
- Unguarded moving parts
- Unsafe hooks
- Obstruction of vision

Hazards Common to Most Cranes

- Sheave-caused cable damage
- Cable kinking
- Side pull
- Boom buckling
- Access
- Control
- Turntable failure
- Removable or adjustable counterweights

Derricks

- 1910.181 (a) Definitions:
  - A-Frame
  - Basket
  - Breast
  - Chicago boom
  - Gin Pole
  - Guy
  - Shearing
  - Stiffleg

Helicopters

- 1910.183 includes:
  - FAA regulations
  - Briefings
  - Slings and taglines
  - Cargo hooks
  - PPE

Helicopters

- Helicopter safety also addresses:
  - Loose gear and objects
  - Load safety regulations
  - Weight limitations
  - Signal systems
  - Communications

Slings—1910.184

- Sling Materials:
  - Alloy steel chain
  - Wire rope
  - Metal mesh
  - Natural fiber rope
  - Synthetic fiber rope
  - Synthetic web

Safe Operating Practices—1910.184 (c)

- 1910.184 (c) (1) to (12) Slings shall not:
  - be used if damaged or defective
  - be shortened with knots, bolts or makeshift devices
  - be loaded in excess of the rated capacity
  - be pulled from under a load when the load is resting on the sling
  - be shock loaded

Safe Operating Practices

- Slings shall:
  - be securely attached to their loads
  - have balanced loads to prevent slippage
  - be padded or protected from sharp edges of loads
  - be kept free of obstructions while suspended with loads
  - be inspected daily prior to use

Safe Operating Practices

- Employees shall:
  - not place hands or fingers between the sling and its load while the sling is being tightened around the load.
  - be kept clear of loads during lifting or suspension.

Sling Selection

- Factors to Consider:
  - Size of load
  - Weight of load
  - Shape of load
  - Temperature of load
  - Sensitivity of the load material
  - Environmental conditions of use

Alloy Steel Chain Slings—1910.184(e)

- Advantages:
  - Good choice for hot materials
  - Capable of lifting heavy loads
  - Adapts to the shape of the load
- Disadvantages:
  - Subject to damage by sudden shock

Steel Chain Slings—Criteria for Removal From Service

- Alloy steel chains heated above 1,000°F
- Link size is less than allowed in Table N-184-2
- Hook(s) are cracked or twisted more than 10° from the plane of the unbent hook
- Hook(s) are opened up by more than 15% of the normal throat opening
- Deformed master links, coupling links or other components

Wire Rope Slings—1910.184(f)

- Wire Rope Slings vary by:
  - Strength
  - Ability to withstand fatigue
  - Ability to withstand abrasive wear
  - Ability to withstand abuse

Wire Rope Slings—Criteria for Removal From Service

- Severe corrosion
- Localized wear
- A ⅓ reduction in outer wire diameter
- Damage or displacement of end fittings by overload or misuse
- Excessive broken wires
- Damage to the wire rope structure (distortion, kinking, bird caging, etc)
- Evidence of heat damage

Metal Mesh Slings—1910.184(g)

- Criteria for removal From service:
  - Broken weld or brazed joint
  - 25% reduction in wire diameter due to abrasion
  - 15% reduction in wire diameter due to corrosion
  - Lack of flexibility due to fabric distortion

Natural Fiber Rope—1910.184(h)

- Advantages:
  - Excellent choice for use on highly finished or fragile parts
  - High flexibility
  - Relatively strong compared to other sling materials (Table N-184-16)

Natural Fiber Rope

- Disadvantages:
  - Cannot be used around caustics & acids
  - Can be damaged by rot or mildew
  - Alteration and abuse is readily achievable

Synthetic Fiber Rope Nylon—1910.184(h)

- Properties of nylon fiber rope:
  - High strength
  - High elasticity
  - Moderate wet strength
  - Mildew resistant
  - Chemical resistant
  - Poor heat resistance

Synthetic Fiber Rope—Polyester

- Properties of polyester fiber rope:
  - Low elasticity
  - High mildew resistance
  - High wet strength
  - Good chemical resistance

Synthetic Web Slings—1910.184(i)

- Advantages of synthetic web slings:
  - Relatively strong
  - Certain types are resistant to damage from acids or caustics
  - Conform to any shape
  - Will not scratch highly polished or delicate loads
  - Abrasion resistant

Advantages of Synthetic Web Slings

- Unaffected by mildew, rot or bacteria
- Low cost
- Long service life
- Good shock absorbency
- Temperature resistant (up to 180°F)

Synthetic Web Slings—Criteria for Removal From Service

- The presence of acid or caustic burns
- Melting or charring of sling surface
- Snags, punctures, tears or cuts
- Broken or worn stitches
- Distortion of fittings

U.S. Department of Labor

Occupational Safety and Health Administration
Washington, D.C. 20210

OSHA Instruction STD 1-11.7
August 5, 1981
Office of Compliance Programming

Subject: 29 CFR 1910.178(k)(1) and (m)(7): Mechanical Means to Secure Trucks or Trailers to a Loading Dock

A. Purpose. This instruction allows the use of a mechanical means which secures trucks or trailers to a loading dock in situations in which they provide the equivalent protection of wheel chocks.

B. Scope. This instruction applies OSHA-wide.

C. Reference. OSHA Instruction STD 1-11.5, January 31, 1978, Powered Industrial Trucks, Chocks, and Blocks.

D. Action. OSHA Regional Administrators/Area Directors shall take action to ensure that 29 CFR 1910.178(k)(1) and (m)(7) are enforced in accordance with the guidelines in F. of this instruction.

E. Federal Program Change. This instruction describes a Federal program change which affects State programs. Each Regional Administrator shall:

1. Ensure that this change is forwarded to each State designee.

2. Explain the technical content of the change to the State designee as requested.

3. Ensure that State designees are asked to acknowledge receipt of this Federal program change in writing, within 30 days of notification, to the Regional Administrator. This acknowledgment should include a description either of the State's plan to implement the change or of the reasons why the change should not apply to that State.

4. Review policies, instructions and guidelines issued by the State to determine that this change has been communicated to State program personnel. Routine monitoring activities (accompanied inspections and case file reviews) shall also be used to determine if this change has been implemented in actual performance.

F. Guidelines. Under the following conditions, failure to use wheel chocks in accordance with 29 CFR 1910.178(k)(1) and (m)(7) will be deemed to be de minimis violations and will not be cited:

1. A positive mechanical means to secure trucks or trailers to a loading dock is allowed provided the system is installed and used in a manner that effectively prevents movement of trucks and trailers during loading, unloading and boarding by handtrucks and powered industrial trucks.

2. All of the mechanical equipment shall be installed, maintained and used as recommended by the manufacturer.

3. Any damaged mechanical equipment will be removed from service immediately.

G. Background.

1. The current OSHA standards in 29 CFR 1910.178(k)(1) and (m)(7) only allow the use of wheel chocks under the rear wheels to prevent the trucks from moving while loading and unloading.

2. The U.S. Department of Transportation has a mandatory regulation (49 CFR 393.86) that all truck trailers be equipped with a rear end protection device mounted at the rear to prevent cars from being wedged underneath the back of a trailer during a collision. A mechanical fastening device may be bolted to the loading dock to secure the truck or trailer rear end protection device and prevent any separation from the dock.

3. OSHA Instruction CPL 2.11A implements guidelines on de minimis violations which have no direct or immediate relationship to safety and health. CSHO's shall recognize minor technical deviations which have no direct or immediate relationship to safety and health as de minimis violations.

4. OSHA authority to regulate motor carriers in this regard is delineated in OSHA Instruction STD 1-11.5, Powered Industrial Trucks, Chocks, and Blocks.

Thorne G. Auchter
Assistant Secretary

DISTRIBUTION: National, Regional and Area Offices
All Compliance Officers
State Designees
NIOSH Regional Program Directors

U.S. Department of Labor

Occupational Safety and Health Administration
Washington, D.C. 20210

Reply to the Attention of:

MAY 21 1984

MEMORANDUM FOR: BYRON R. CHADWICK
REGIONAL ADMINISTRATOR

FROM: JOHN B. MILES, JR., DIRECTOR
DIRECTORATE OF FIELD OPERATIONS

SUBJECT: Interpretation: 1910.178(m)(12)

This is in response to your memorandum, dated May 7, 1984, requesting an interpretation of 1910.178(m)(12).

29 CFR 1910.178(m)(12) is exclusively applicable to lift trucks equipped with elevatable controls. The standard does not require or mandate that such controls must be installed on trucks not so equipped. The current industry consensus standard ANSI B56.1-1975 helps to clear up the confusion, because it addresses the use of personnel safety platforms on trucks without elevatable controls as well as those with such controls. Sections 427 and 513A of the 1975 ANSI standard (copy attached), specify the safety requirements for fabrication and use of elevatable personnel platforms for use with powered industrial trucks. Since the OSHA standard does not require elevatable controls on such platforms, employers who comply with these sections of the 1975 ANSI standard would be in compliance with the OSHA Act and are not subject to citation unless an unusually hazardous situation exists.

In this instance, it appears that the employer's position is correct. Under the circumstances described in the Area Director's memo to you, the employer is not required to have an elevatable power shut off when there are no elevatable controls on the platform. However, he is required to have a vehicle operator remain at the controls whenever employees are elevated.

Attachment

bcc: All RA's; tng. Inst.; Mallinger-TS
Bode: OGICA: FTS 523-8031

U.S. Department of Labor

Occupational Safety and Health Administration
Washington, D.C. 20210

Reply to the Attention of:

DEC 17 1984

Bo Andersson, President
ITX Air Treatment, Inc.
P.O. Box 6372
Bellevue, Washington 98008

Dear Mr. Andersson:

This is in response to your letter of December 5, 1984, requesting a review of the ITX Hi-Lift by the Occupational Safety and Health Administration (OSHA).

Attachments for use on fork lift trucks significantly affect the stability and safety of the vehicles. Stability characteristics of a fork lift truck are established by the manufacturer of the vehicle and any modification or attachment which alters the stability must be approved by the manufacturer to assure safe operation.

OSHA standard 29 CFR 1910.178(a)(4) requires written approval by the manufacturer of the vehicle for modifications and additions. Unfortunately, use of your attachments without benefit of the manufacturer's written approval, are in violation of the OSHA standards at 1910.178, copy enclosed. Such approval must be obtained for each vehicle intended for application of your device.

If we may be of further assistance, please call or write.

Sincerely,

John B. Miles, Jr.

John B. Miles, Jr., Director
Directorate of Field Operations

Enclosure

bcc: All RA's, Tng. Inst.; SIF
Bode: OGICA: FTS523-8031

THE CAPACITY OF YOUR LIFT TRUCK — a simple way of reaching the top!

ORIGINAL

HI-LIFT

A simple and inexpensive lifting system to attach to your lift truck

- easy to attach
- wide reach
- solid
- mobile even when the platform is in working position
- short pay-off time, it pays for itself even when only used a couple of days a year
- no time of waiting, you

LIFTRUK KRANES

- Converts a fork lift to a mobile overhead crane
- 1½ & 3 ton capacity
- 11 hook-position telescopic boom length
- Boom operates in 5 positions
- Extends up to 12-ft. beyond forks

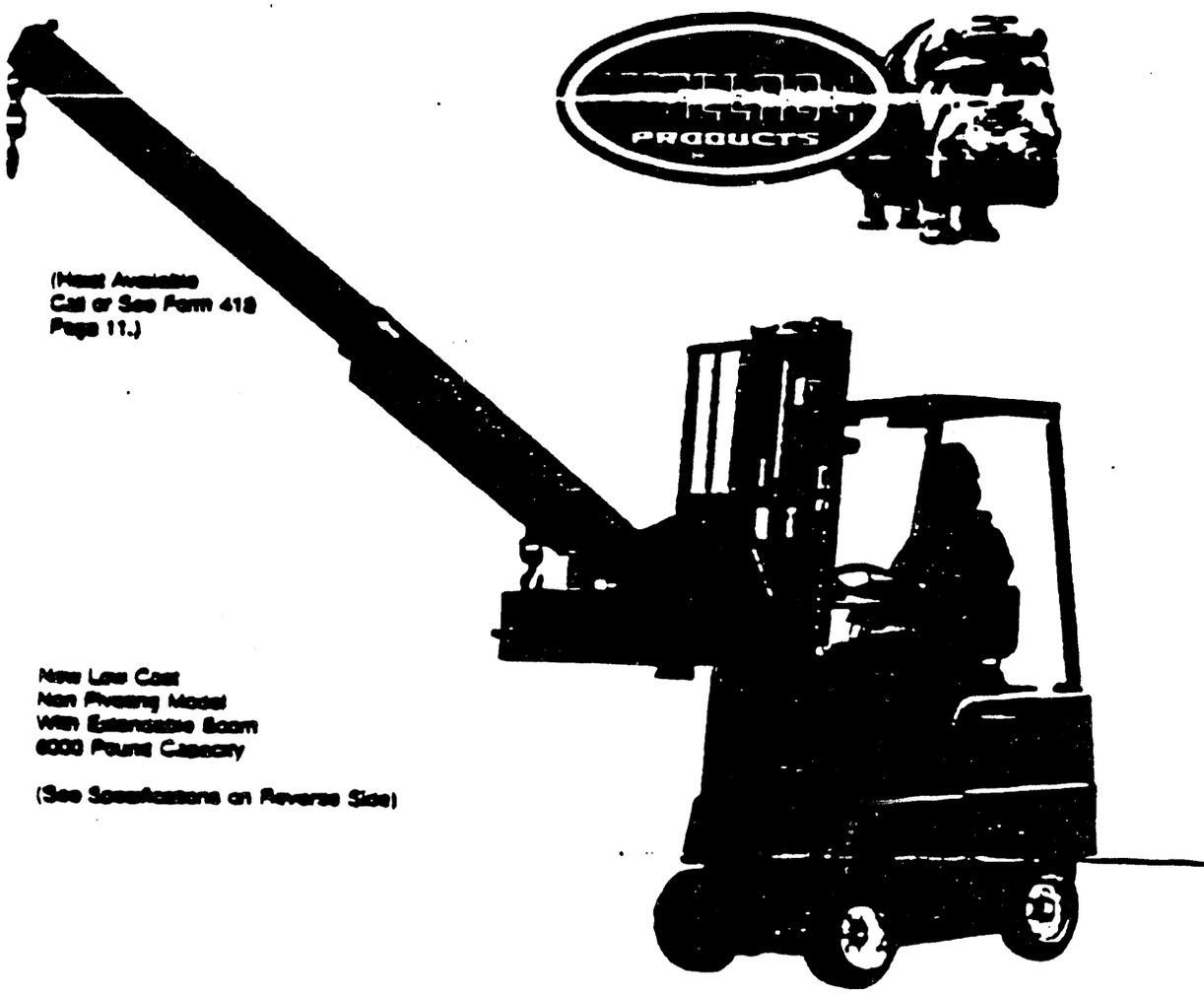

(Next Available
Call or See Form 418
Page 11.)

New Low Cost
Non Freezing Model
With Extendable Boom
6000 Pound Capacity

(See Specifications on Reverse Side)

FOR IMMEDIATE ANSWERS • CALL COLLECT 215-647-1400
B.E. WALLACE PRODUCTS CORP. • P.O. BOX 70, EXTON, PA 19341

WARRANTY

[illegible]

THE WARRANTY IS IN LIEU OF ALL WARRANTIES OF MERCHANTABILITY, FITNESS FOR PARTICULAR PURPOSE, OR OTHER WARRANTIES, EXPRESS OR IMPLIED, EXCEPT OF TITLE AND AGAINST PATENT INFRINGEMENT. [illegible]

[illegible]

©Copyright 1988 B.E. Wallace Products Corp.

FORM 418 (R-88)

TYPES OF TRUCKS

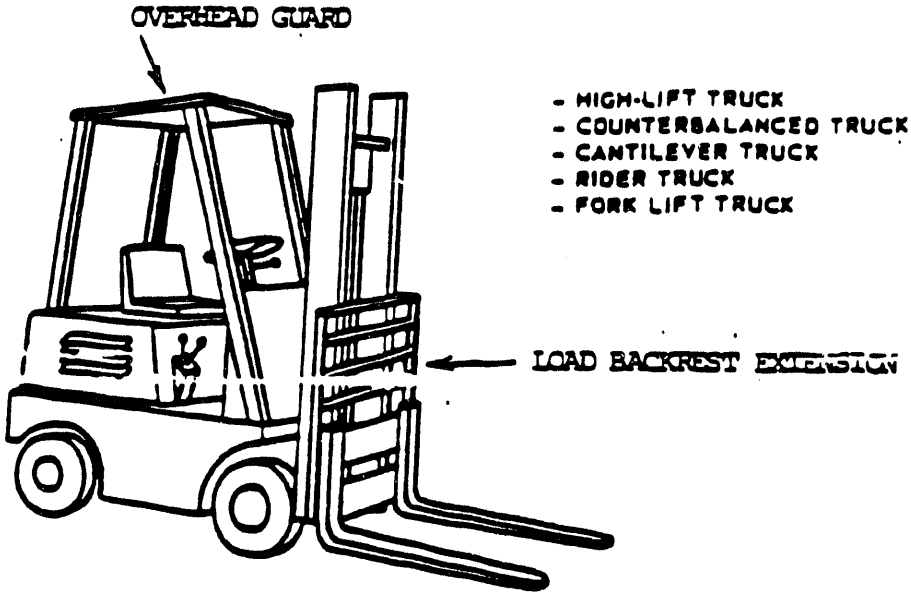

- HIGH-LIFT TRUCK
- COUNTERBALANCED TRUCK
- CANTILEVER TRUCK
- RIDER TRUCK
- FORK LIFT TRUCK

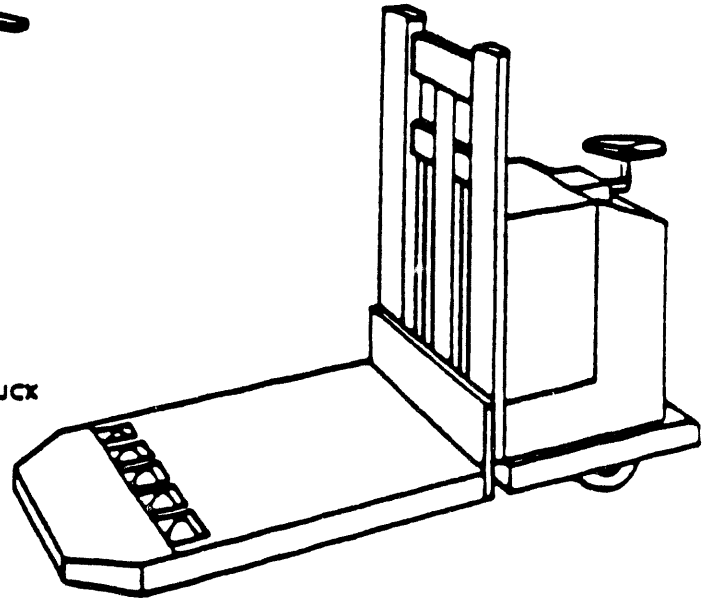

- HIGH-LIFT TRUCK
- HIGH-LIFT PLATFORM TRUCK

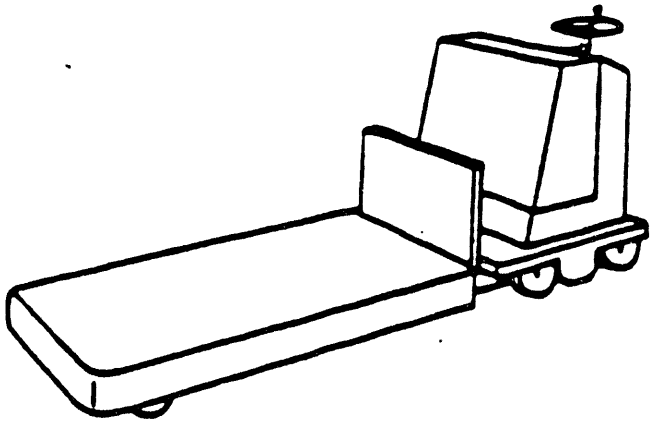

- LOW-LIFT TRUCK
- LOW-LIFT PLATFORM TRUCK

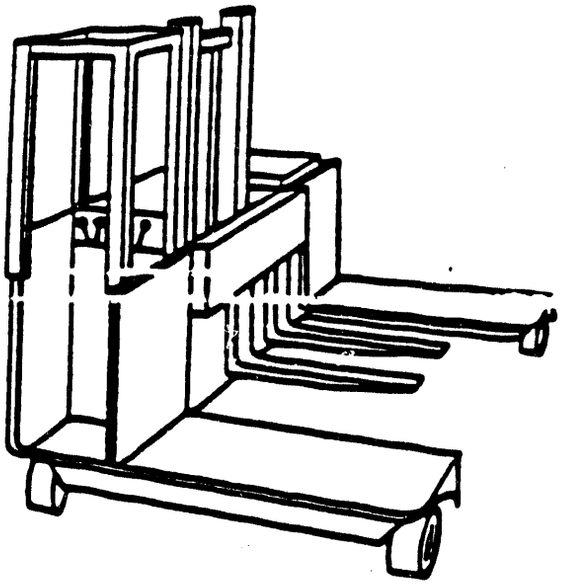

- SIDE-LOADER TRUCK

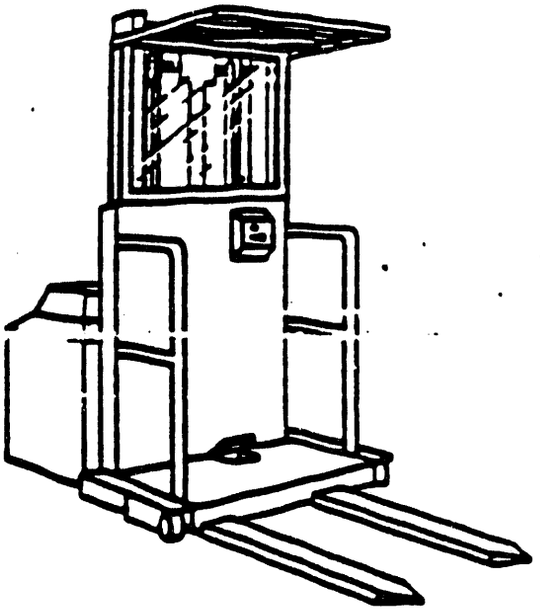

- ORDER PICKER TRUCK, HIGH LIFT

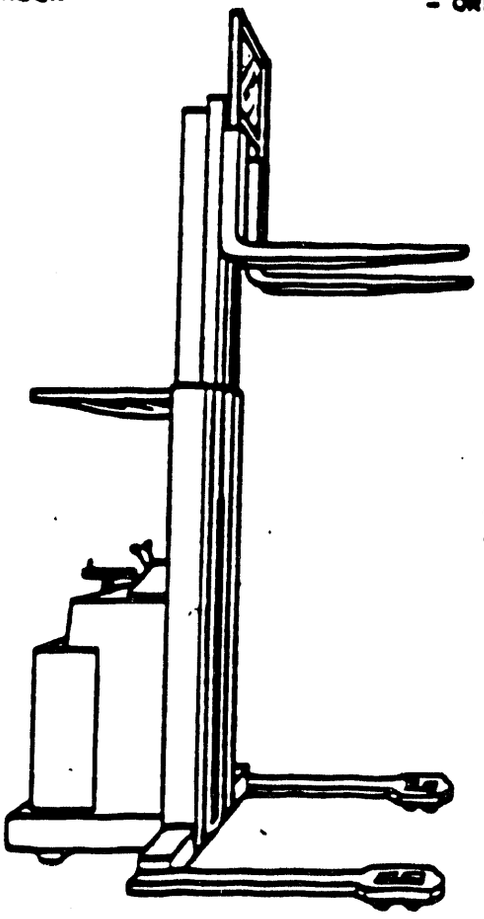

- NARROW-AISLE TRUCK
- STRADDLE TRUCK

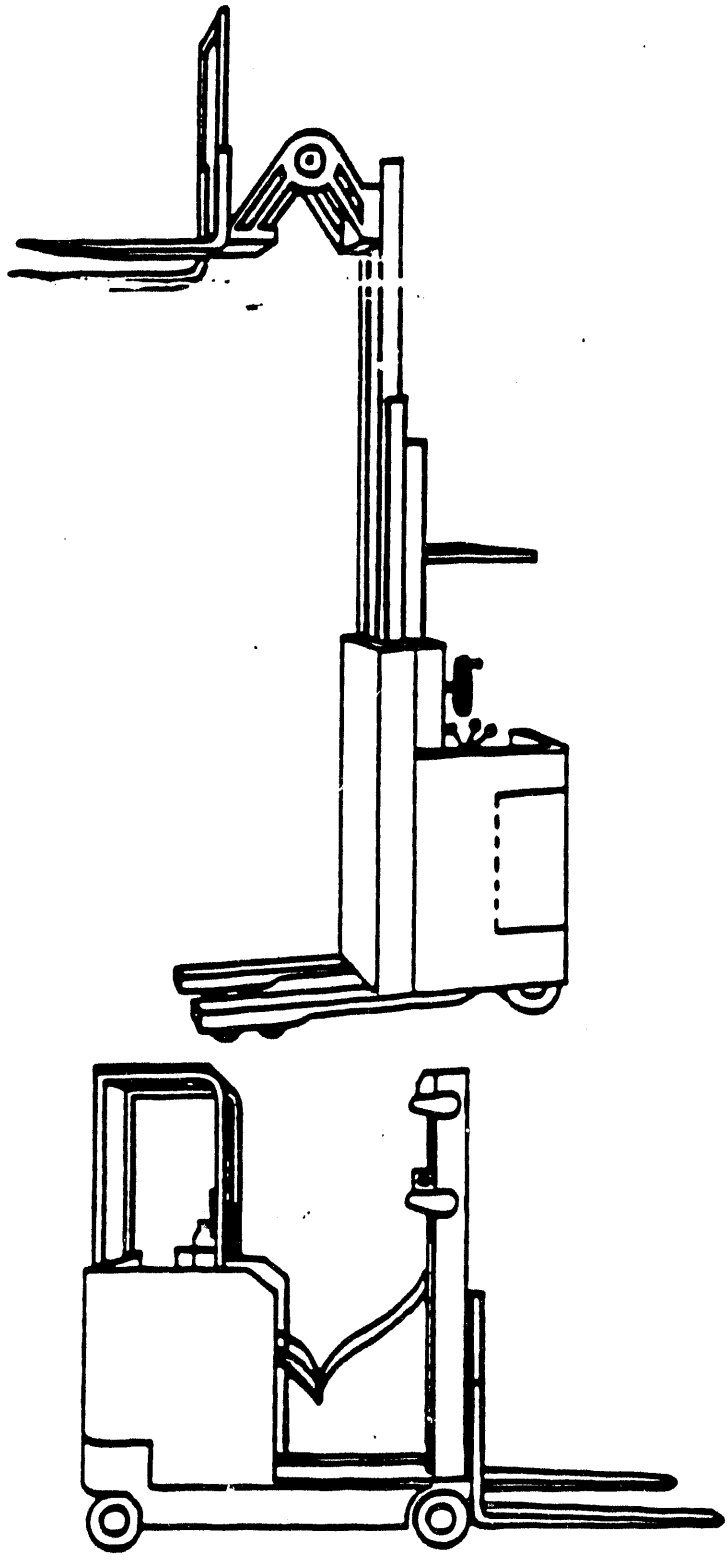

REACH TRUCK

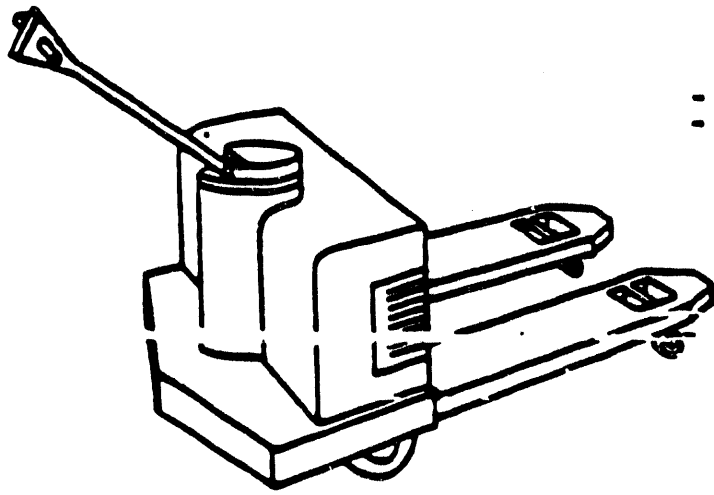

- MOTORIZED HAND TRUCK
- PALLET TRUCK

- INDUSTRIAL TRACTOR

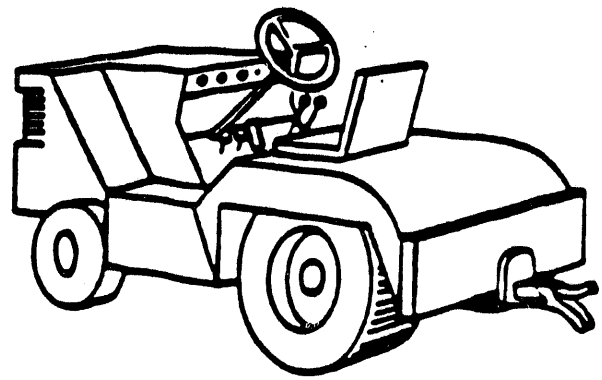

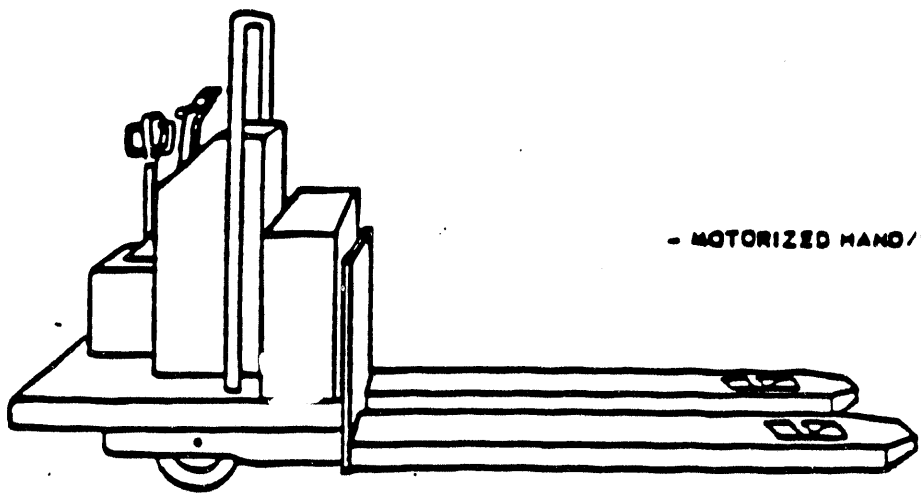

- MOTORIZED HAND/RIDER TRUCK

U.S. Department of Labor

Assistant Secretary for
Occupational Safety and Health
Washington, D.C. 20210

OSHA Instruction STD 1-11.2B
AUG 8 1983
Office of Compliance Programming

Subject: Work Platforms Suspended from Lattice or Hydraulic Crane Booms

A. Purpose. This instruction clarifies 29 CFR 1926.550(b)(2) and the ANSI referenced requirement that the operator shall not hoist, lower, swing or travel the crane while anyone is on the load, or hook, as related to the use of working platforms suspended from cranes. Historically, OSHA has not cited in situations where there is no less hazardous means of transporting employees in unique work situations.

B. Scope. This instruction applies OSHA-wide.

C. Cancellation. OSHA Instruction STD 1-11.2A, October 1, 1981, is canceled.

D. Action. OSHA Regional Administrators and Area Directors shall ensure that cranes are used to hoist and suspend employees on a working platform only as permitted in F. of this instruction.

E. Federal Program Change. This instruction describes a Federal program change which affects State programs. Each Regional Administrator shall:

1. Ensure that this change is forwarded to each State designee.

2. Explain the technical content of the change to the State designees as requested.

3. Ensure that State designees are asked to acknowledge receipt of this Federal program change in writing, within 30 days of notification, to the Regional Administrator. This acknowledgment should include a description either of the State's plan to implement the change or of the reasons why the change should not apply to that State.

4. Review policies, instructions and guidelines issued by the State to determine that this change has been

communicated to State program personnel. Routine monitoring activities (accompanied inspections and case file reviews) shall also be used to determine if this change has been implemented in actual performance.

F. Guidelines. Cranes may be used to hoist and suspend employees on a work platform or to provide access and egress in unique work situations when such action results in the least hazardous exposure to employees. Employers using cranes to hoist or suspend employees on a work platform in situations where the use of other equipment designed for the purpose is feasible or is specified by the standards will be cited when appropriate.

1. Confirmation. CSHO's encountering a situation in which they believe there is no alternative to employees working from a platform suspended from a crane shall contact their Area Director or Supervisor for confirmation of the operation.

2. Less Hazardous Alternative. In unique work situations where there is no less hazardous alternative, and under controlled conditions, it is permissable to use cranes to provide access and egress for employees. However, the employer must develop and produce evidence that other, less hazardous methods of access and egress are not available or practical.

a. Documentation. The employer shall retain at the jobsite and produce, when requested, documentation such as lift capacity information verifying that the requirements in this instruction have been met.

b. Crane Requirements. For the proper design, inspection, construction, testing, maintenance, and operation of crawler, locomotive and truck cranes, CSHO's shall refer to the applicable standards, 29 CFR 1926.550, and ANSI B30.5-1968. Additional controlled conditions to meet these requirements include the following:

(1) The rated capacity of the crane at the radius at which the lift will be made shall

be divided by four (4) and this limit shall not be exceeded.

(2) A full-cycle operational test lift shall be made prior to lifting of employees. The platform shall carry twice the intended load during the test lift.

(3) Prelift plans which show boom angle and maximum intended load shall be prepared for each group of lifts.

(4) All lifts shall be made in accordance with the manufacturer's lifting recommendations.

(5) A firm footing, uniformly level within 1 percent, (1 foot in 100 feet) shall be provided for cranes. Crane outriggers shall be appropriately utilized when hoisting employees.

(6) The stability of the footing shall be verified during the full-cycle operational test.

(7) The load line on which the platform is suspended will have control load lowering. The free fall option shall not be used with suspended work platforms.

c. Lifting Bridle Requirements. Lifting bridles on working platforms suspended from cranes shall consist of four legs so attached that the stability of the platform is ensured. The lifting bridle on working platforms suspended from cranes shall be secured by a shackle or attached by a closed hook which cannot open due to load position in the hook.

d. Platform Requirements. The platform and its components must be capable of supporting,

without failure, at least four times the maximum intended load. The platform shall be enclosed with a guardrail system including a top guardrail of approximately 42 inches, a midrail and a toeboard. The guardrail system shall withstand a load of at least 200 pounds applied in any direction.

(1) The number of employees to be hoisted shall be kept to a minimum and in no case shall the number exceed 4.

(2) Employees using the platform shall be considered as weighing 250 pounds each.

(3) The platform shall not be used during high winds, electrical storms, snow or other adverse weather conditions which could endanger employees on the platform.

e. Communication Requirements. The standard hand signals to the operator shall be in accordance with 29 CFR 1926.550(a)(4), unless voice communication equipment (telephone, radio, or equivalent) is utilized. Signals shall be visible or audible to the operator at all times.

3. Citations. OSHA Compliance officers will cite 29 CFR 1926.550(b)(2) if the employer fails to comply with the guidelines of this instruction.

F. Background. OSHA has issued three program directives which provided guidelines for the use of working platforms suspended from cranes. Those guidelines were incorporated into the instruction dated October 1, 1981. Since the issuance of that instruction, OSHA has determined that additional safety requirements are

necessary for the further protection of employees working on platforms suspended from cranes. This instruction includes these additional requirements.

Thorne G Auchter
Assistant Secretary

DISTRIBUTION: National, Regional and Area Offices
All Compliance Officers
State Designees
NIOSH Regional Program Directors
7(c)(1) Project Managers

* U.S. GOVERNMENT PRINTING OFFICE: 1983-381-095/419

CRANES

CHAPTER 2-0

SCOPE, DEFINITIONS, REFERENCES

Section 2-0.1 Scope of B30.2

Within the general scope defined in Section 1, B30.2.0 applies to top running overhead, and gantry cranes including polar, semi-gantry, cantilever gantry, wall cranes and others having the same fundamental characteristics. These cranes are grouped because they all have top running trolleys and similar travel characteristics.

Section 2-0.2 Definitions

2-0.2.1 Types of Equipment

2-0.2.1.1 Crane. A machine for lifting and lowering a load and moving it horizontally, with the hoisting mechanism an integral part of the machine. Cranes, whether fixed or mobile, are driven manually, by power, or by a combination of both.

2-0.2.1.2 Automatic Crane. A crane which, when activated, operates through a preset cycle or cycles.

2-0.2.1.3 Cab-Operated Crane. A crane controlled by an operator in a cab attached to the bridge or trolley.

2-0.2.1.4 Cantilever Gantry Crane. A gantry or semi-gantry crane in which the bridge girders or trusses extend transversely beyond the crane runway on one or both sides.

2-0.2.1.5 Floor-Operated Crane. A crane which is controlled by a means suspended from the crane by an operator on the floor or an independent platform.

2-0.2.1.6 Gantry Crane. A crane similar to an overhead crane except that the bridge for carrying the trolley or trolleys is rigidly supported on two or more legs running on fixed rails or other runway.

2-0.2.1.7 Hot Molten Material Handling Crane. An overhead crane used for transporting or pouring molten material.

2-0.2.1.8 Manually-Operated Crane. A crane whose hoist mechanism is driven by pulling an endless chain or whose travel mechanism is driven in the same manner or by manually moving the load or hook.

2-0.2.1.9 Outdoor Storage Gantry Crane. A gantry type crane of long span usually used for storage of bulk material such as ore, coal, etc.; the bridge girders or trusses are rigidly or nonrigidly supported on one or more legs. It may have one or more fixed or hinged cantilever ends.

2-0.2.1.10 Overhead Crane. A crane with a multiple girder movable bridge carrying a movable or fixed hoisting mechanism and traveling on an overhead fixed runway structure.

2-0.2.1.11 Polar Crane. A bridge or gantry type crane which travels on a circular runway.

2-0.2.1.12 Power-Operated Crane. A crane whose mechanism is driven by electric, air, hydraulic or internal combustion means.

2-0.2.1.13 Pulpit-Operated Crane. A crane operated from a fixed operator station not attached to the crane.

2-0.2.1.14 Remote-Operated Crane. A crane controlled by an operator not in a pulpit or in the cab attached to the crane, by any method other than a means suspended from a crane.

2-0.2.1.15 Semi-Gantry Crane. A gantry crane with one end of the bridge rigidly supported on one or more legs that run on a fixed rail or runway, the other end of the bridge being supported by a truck running on an elevated rail or runway.

2-0.2.1.16 Wall Crane. A crane having a cantilever frame with or without trolley, and supported from a side wall or line of columns of a building. It is a traveling type and operates on a runway attached to the side wall or columns.

TYPES OF CRANES

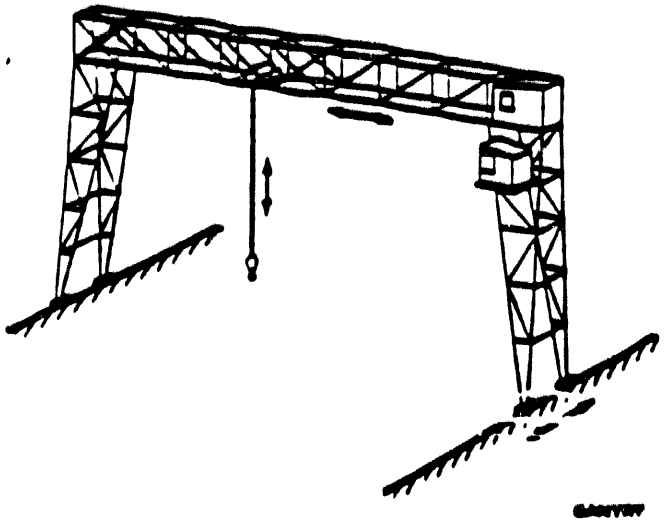

GANTRY

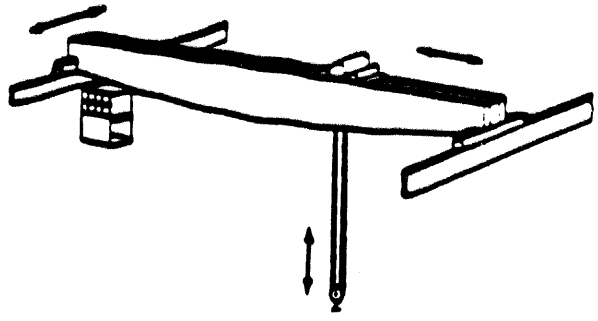

OVERHEAD TRAVELING

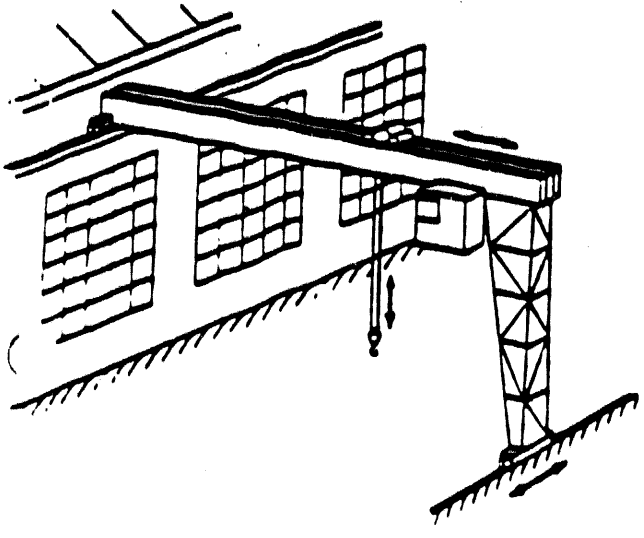

SEMI-GANTRY

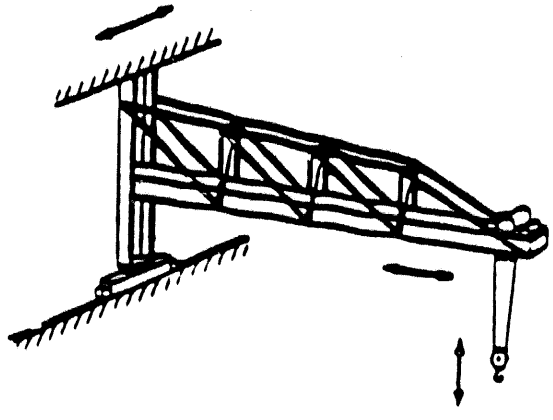

WALL

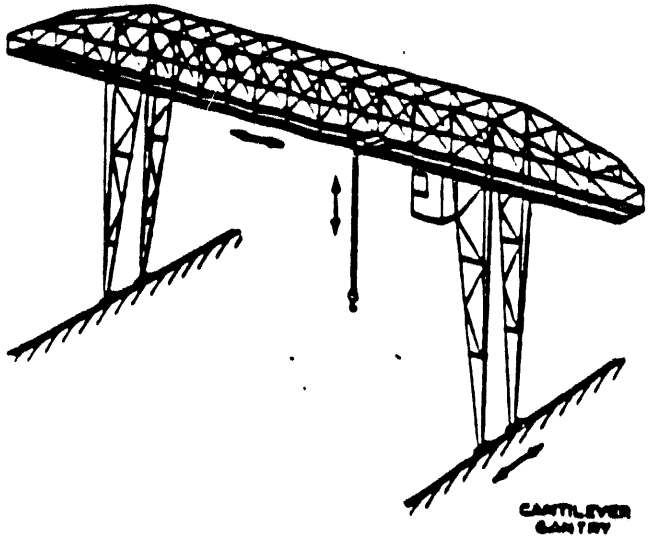

CANTILEVER GANTRY

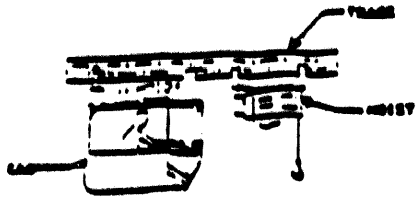

CAB CONTROLLED POWER HOIST

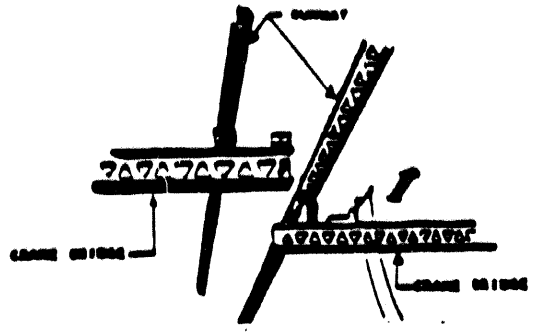

INTERLOCKING SYSTEM FOR UNDERHUNG CRANE

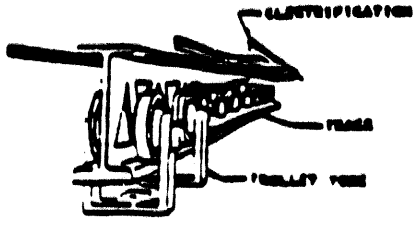

ELECTRIFICATION OF MONORAIL TRACK

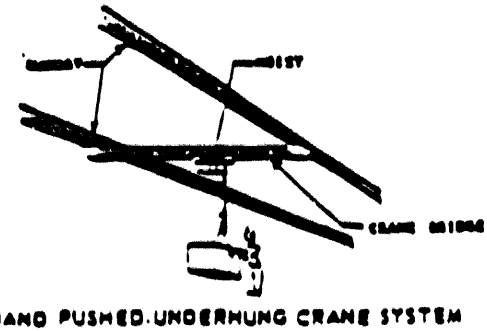

HAND PUSHED-UNDERHUNG CRANE SYSTEM

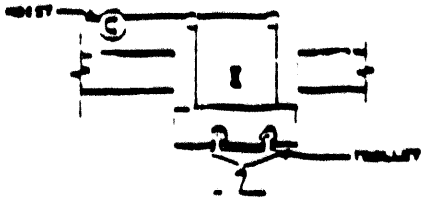

TRACK DROP OR LIFT SECTION

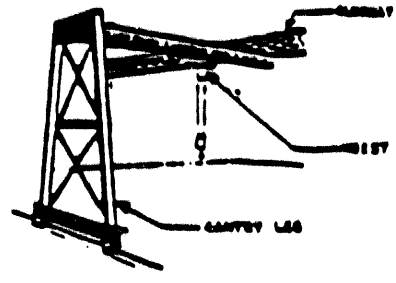

SINGLE-LEG GANTRY CRANE

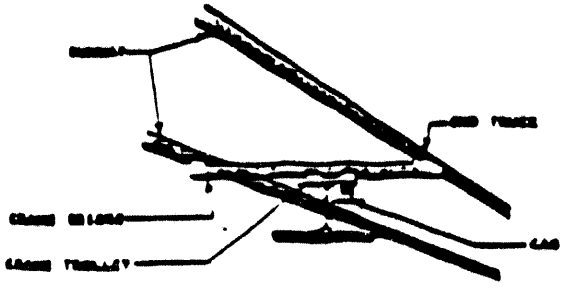

CAB CONTROLLED UNDERHUNG CRANE

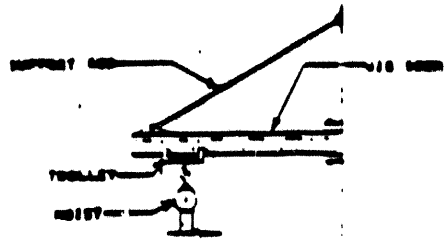

WALL SUPPORTED JIB CRANE

HOOK CHAIN HOIST
HAND OPERATED
GEARED TYPE

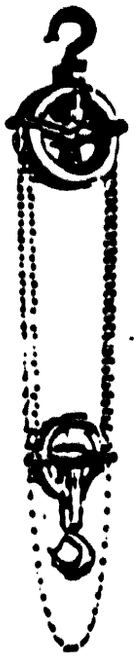

HOOK CHAIN HOIST
HAND OPERATED
DIFFERENTIAL TYPE

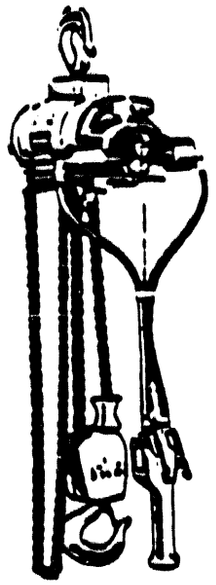

CHAIN HOIST
AIR MOTOR

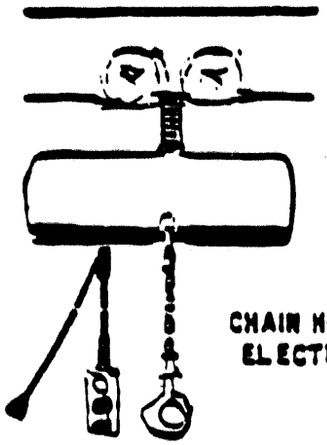

CHAIN HOIST
ELECTRIC

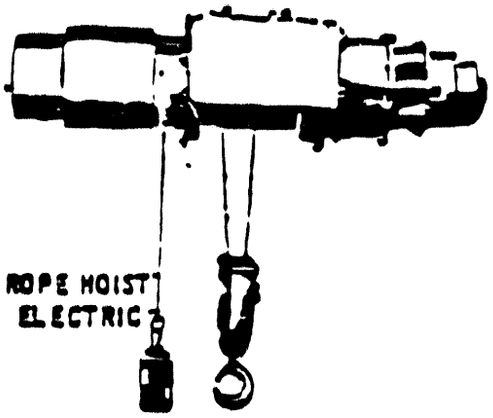

ROPE HOIST
ELECTRIC

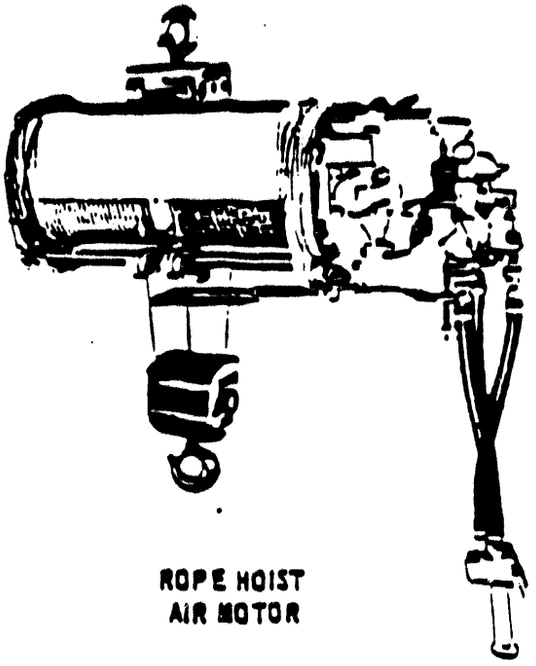

ROPE HOIST
AIR MOTOR

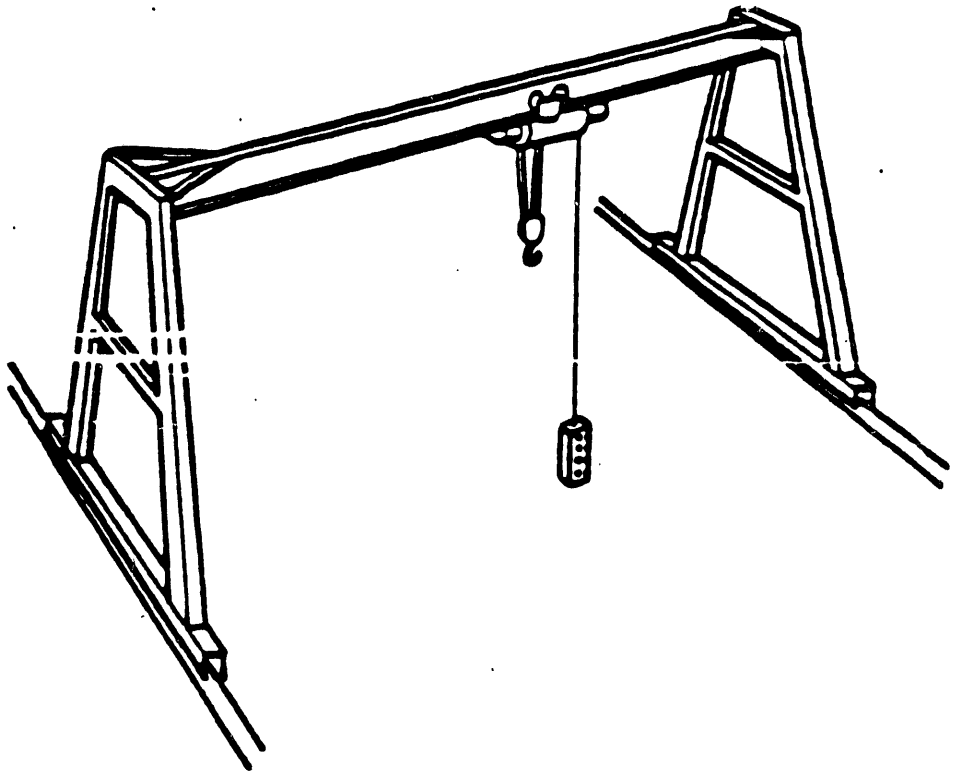

GANTRY-TYPE CRANE

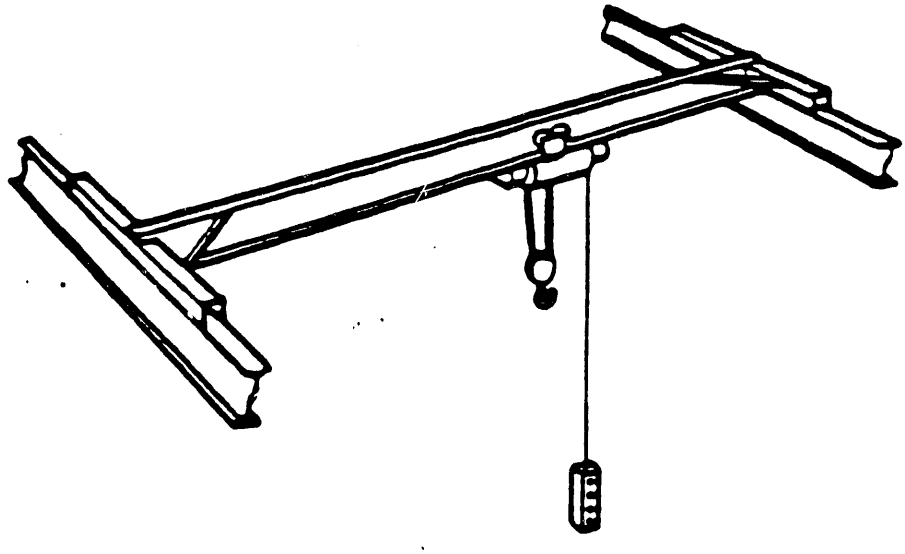

OVERHEAD-TYPE CRANE—FLOOR OPERATED

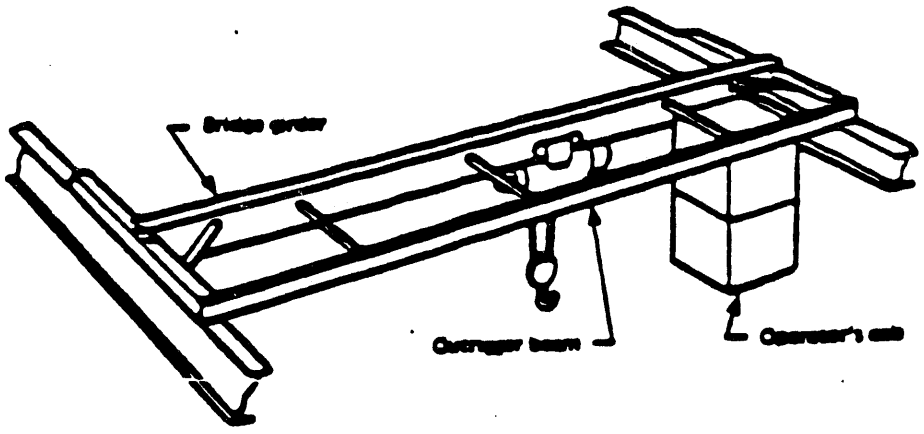

OVERHEAD-TYPE CRANE—CAB OPERATED

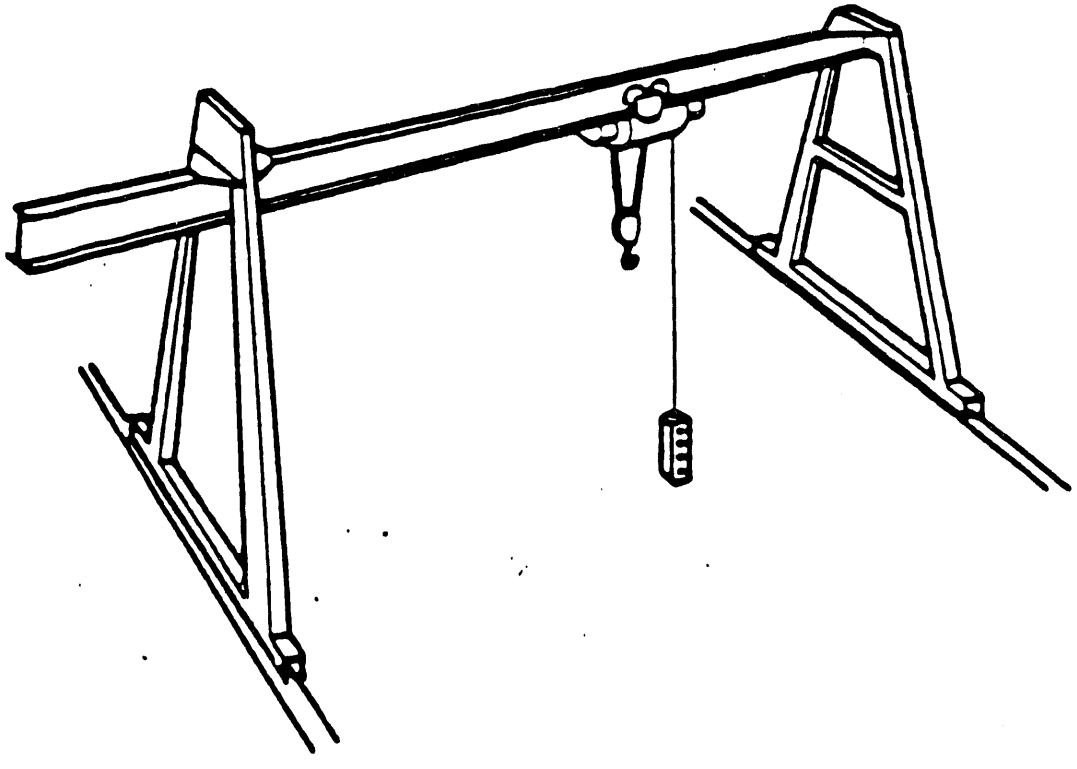

CANTILEVER GANTRY-TYPE CRANE

crane, manually operated. A crane whose hoist mechanism is driven by pulling an endless chain, or whose travel mechanism is driven in the same manner or by manually moving the load.

crane, overhead. A crane with a movable bridge carrying a movable or fixed hoisting mechanism and traveling on an overhead, fixed runway structure.

crane, power-operated. A crane whose mechanism is driven by electric, pneumatic, hydraulic, or internal-combustion means.

crane, pulpit-operated. A crane operated from a fixed operator station not attached to the crane.

crane, remote-operated. A crane controlled by an operator who is not in a pulpit or in the cab attached to the crane, by any method other than a means suspended from the crane.

crane, semi-gantry. A gantry crane with one end of the bridge rigidly supported on one or more legs that run on a fixed rail or runway, the other end of the bridge being supported by a truck running on an elevated rail or runway.

crane, standby. A crane which is not in regular service but which is used occasionally or intermittently as required.

crane service, normal. That service which involves operation with randomly distributed loads within the rated load limit, or uniform loads of less than 65 percent of the rated load, for not more than 15 percent of the time for manually operated cranes and 25 percent of the time for electrically or pneumatically powered cranes, of a single work shift.

crane service, heavy. That service which involves operation within the rated load limit which exceeds normal service.

crane service, severe. That service which involves normal or heavy service with abnormal operating conditions.

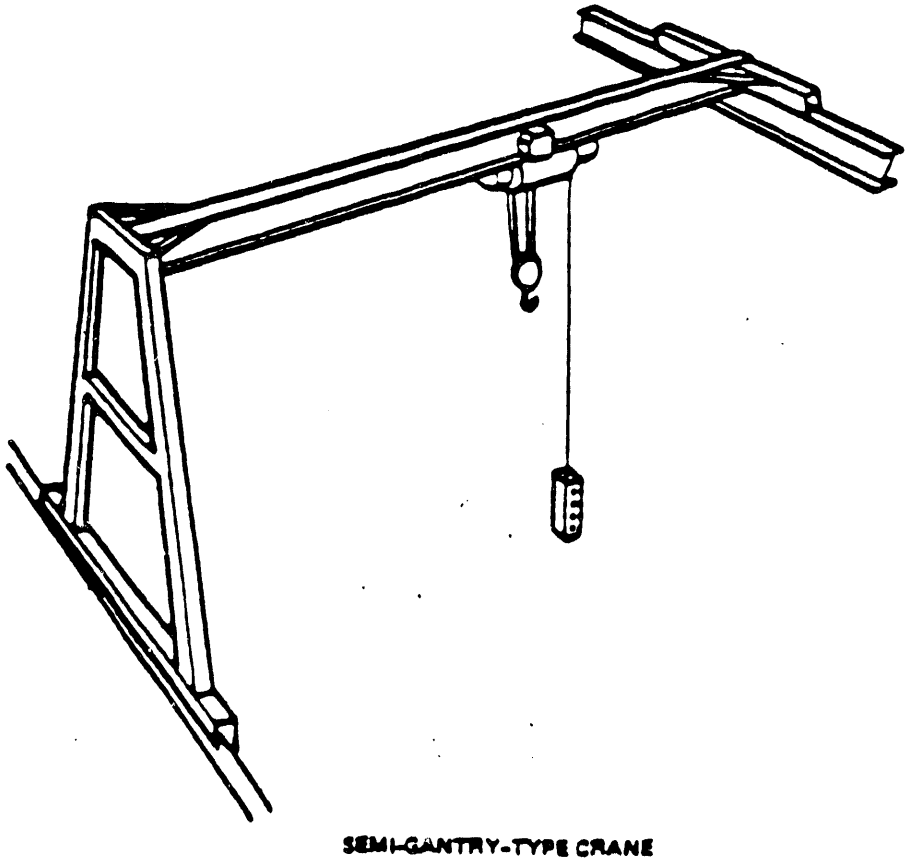

SEMI-GANTRY-TYPE CRANE

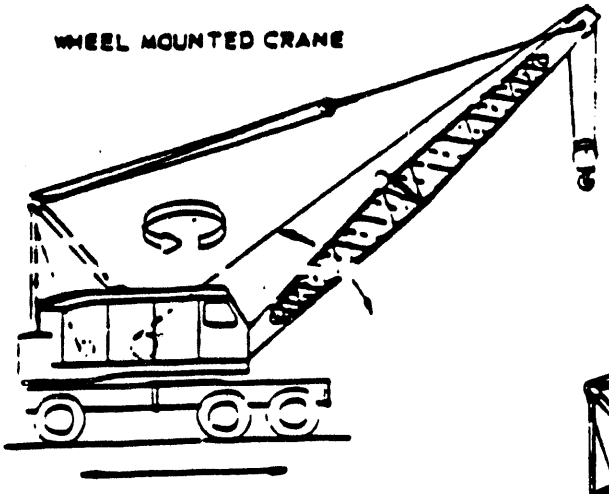
WHEEL MOUNTED CRANE

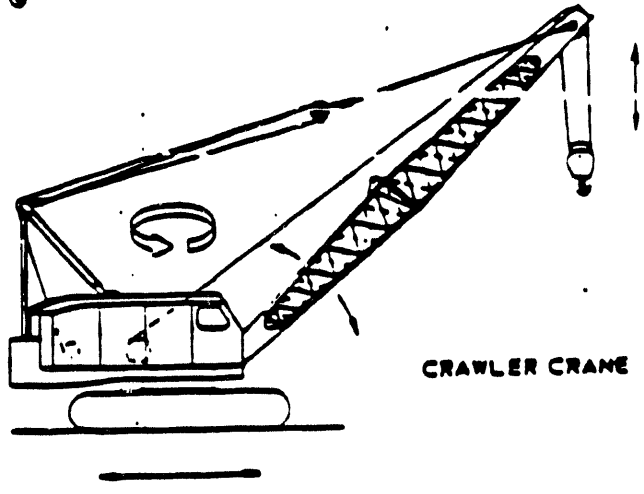
CRAWLER CRANE

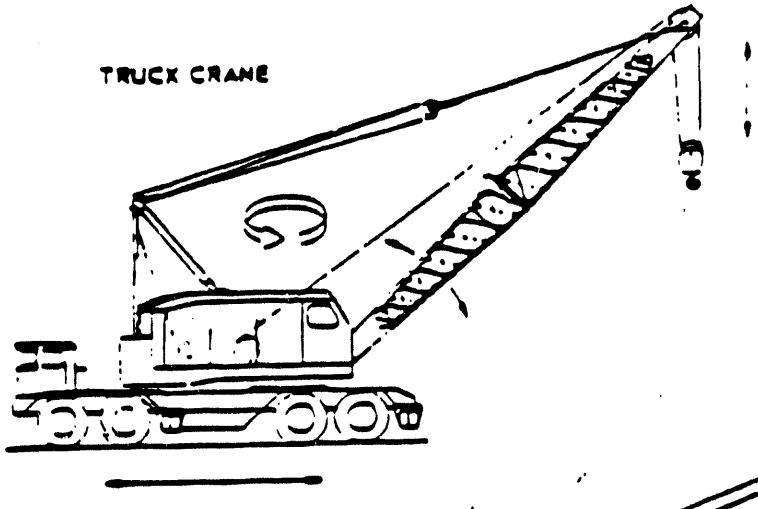
TRUCK CRANE

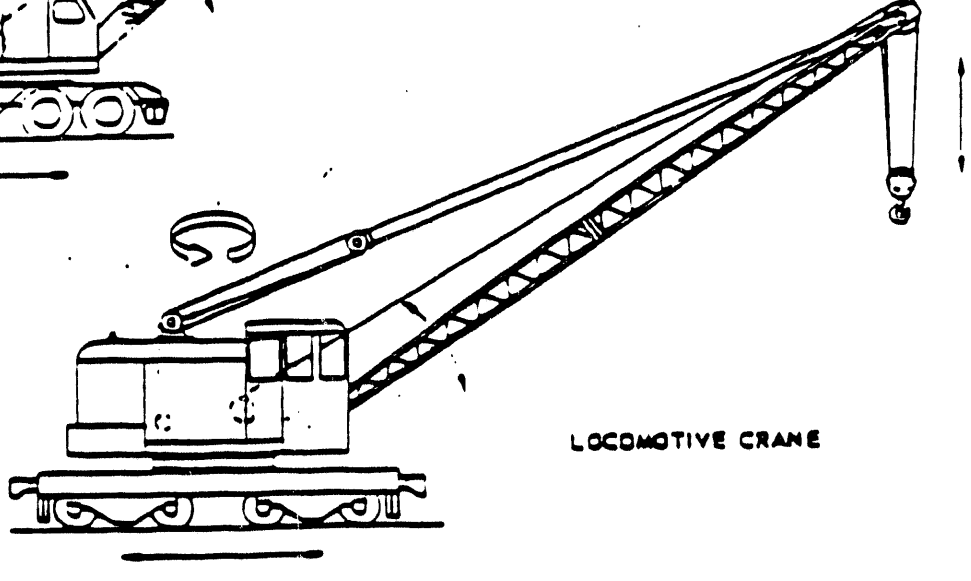
LOCOMOTIVE CRANE

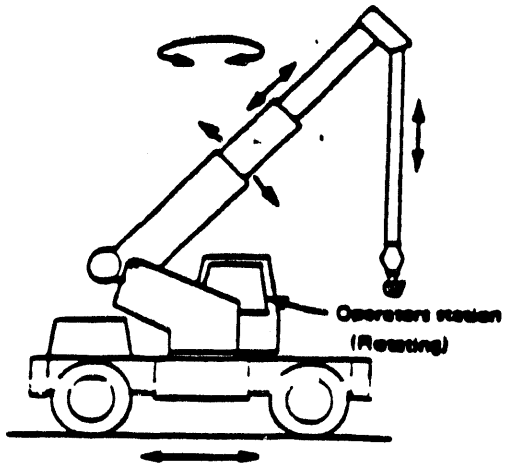

FIG. 5 WHEEL-MOUNTED CRANE – TELESCOPING BOOM (SINGLE CONTROL STATION)

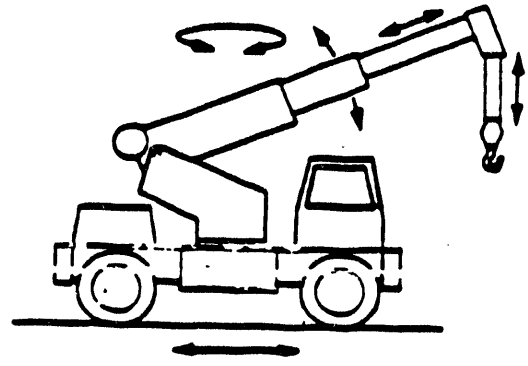

FIG. 6. WHEEL-MOUNTED CRANE – TELESCOPING BOOM (SINGLE CONTROL STATION)

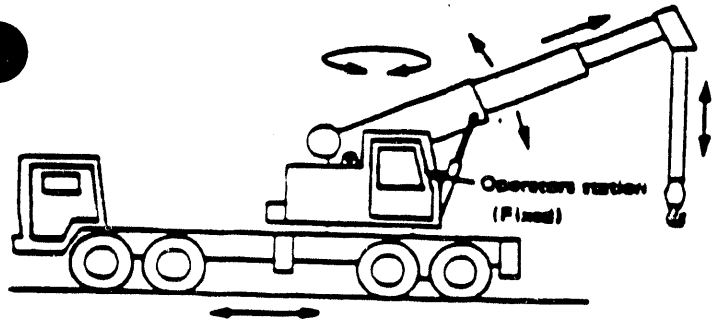

FIG. 7. WHEEL-MOUNTED CRANE – TELESCOPING BOOM (MULTIPLE CONTROL STATION)

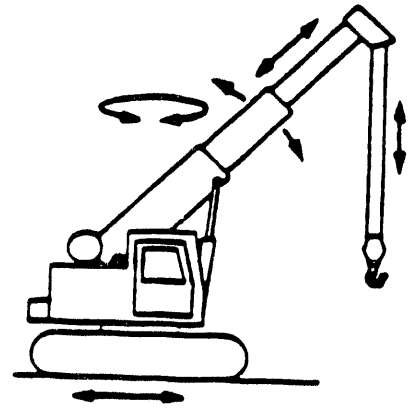

FIG. 8 CRAWLER CRANE – TELESCOPING BOOM

GENERAL NOTE TO FIGS. 5 THROUGH 10:
The boom may have a base boom structure of sections (upper and lower) between or beyond which additional sections may be added to increase its length, or it may consist of a base boom from which one or more boom extensions are telescoped for additional length. These illustrations show some types.

USA STANDARD

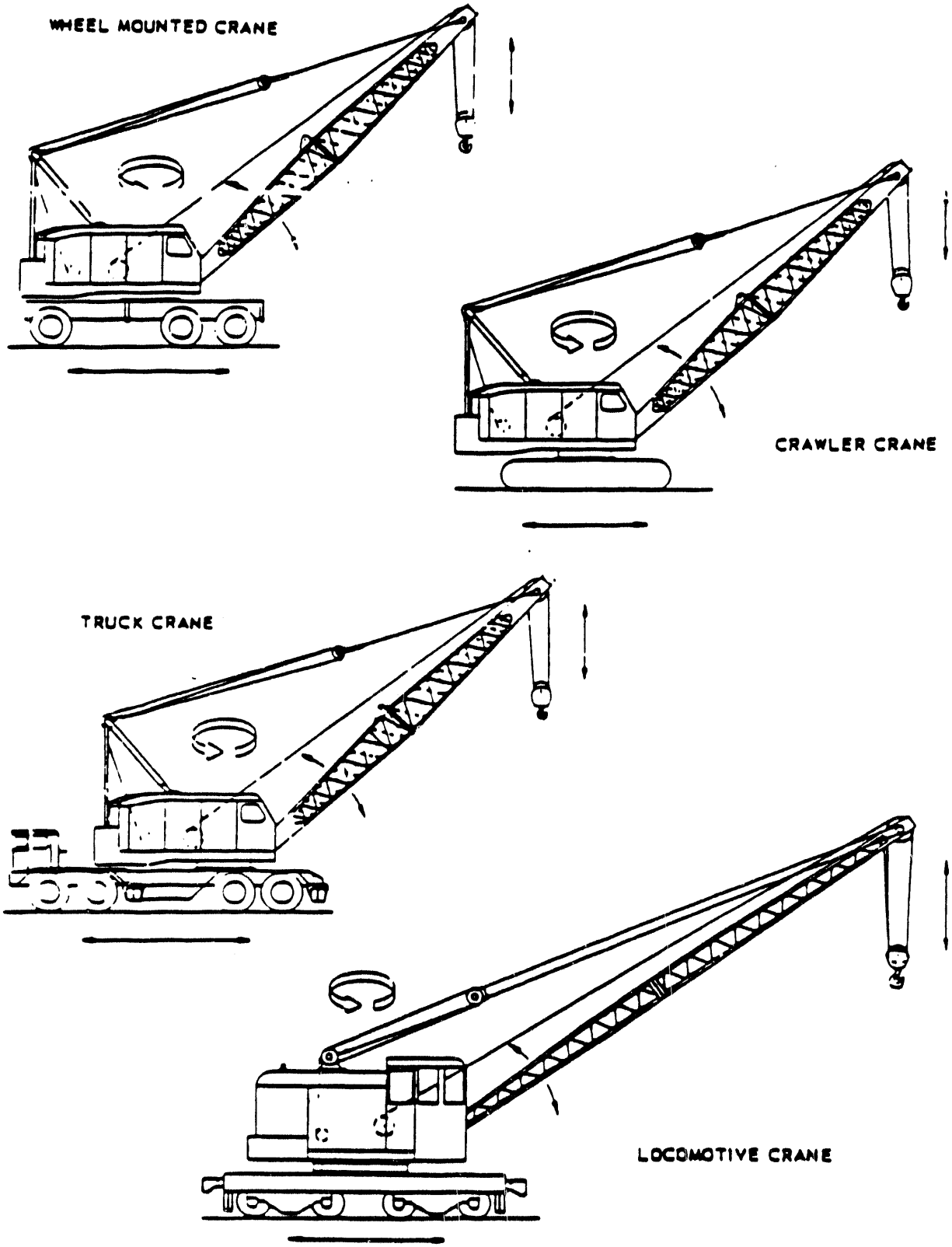

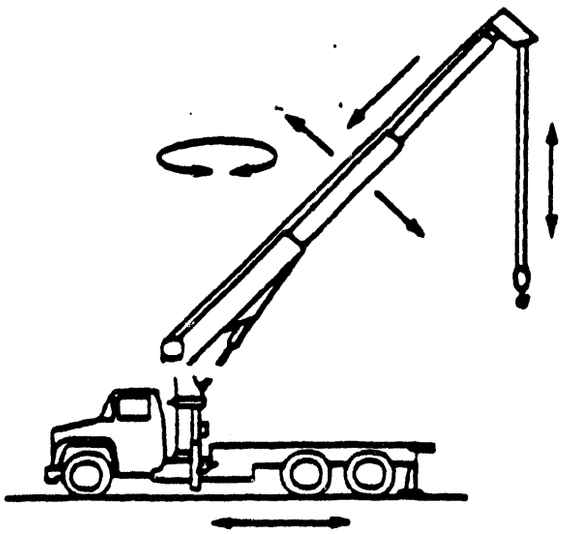

FIG. 9 COMMERCIAL TRUCK-MOUNTED CRANE – TELESCOPING BOOM

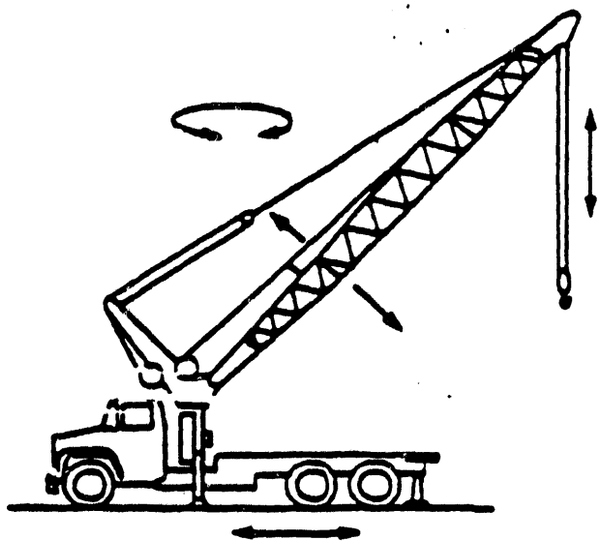

FIG. 10 COMMERCIAL TRUCK-MOUNTED CRANE – NONTELESCOPING BOOM

GENERAL NOTE TO FIGS. 5 THROUGH 10:
The boom may have a base boom structure of sections (upper and lower) between or beyond which additional sections may be added to increase its length, or it may consist of a base boom from which one or more boom extensions are telescoped for additional length. These illustrations show some types.

OVERHEAD CRANES

9/91

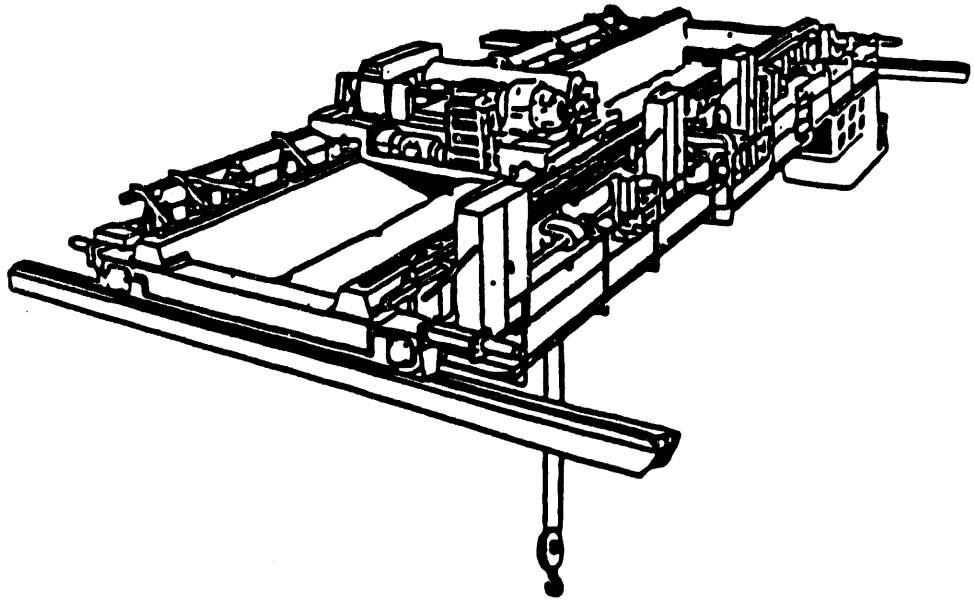

The overhead crane is a traveling machine that rides on a runway structure or pair of tracks above the work floor. The crane includes a bridge that spans between the tracks and a fixed or trolley-mounted hoisting system. Overhead cranes, also called bridge cranes, can be manually operated but when powered are almost invariably electric. They are sometimes formally referred to as overhead electric traveling (OET) cranes. Cranes may be top-running on rails or underslung, in which case they are suspended from, and ride along, the bottom flanges of the runway beams. Bridge girders may be either single or double. Cranes of 250 tons capacity with 100-ft spans are not unusual. OET cranes are mainly used in industrial service but are also found at stone or concrete precasting yards, steel fabricating shops, and storage facilities.

Adapted from U.S. Army Corps of Engineer's manual CRANE SAFETY

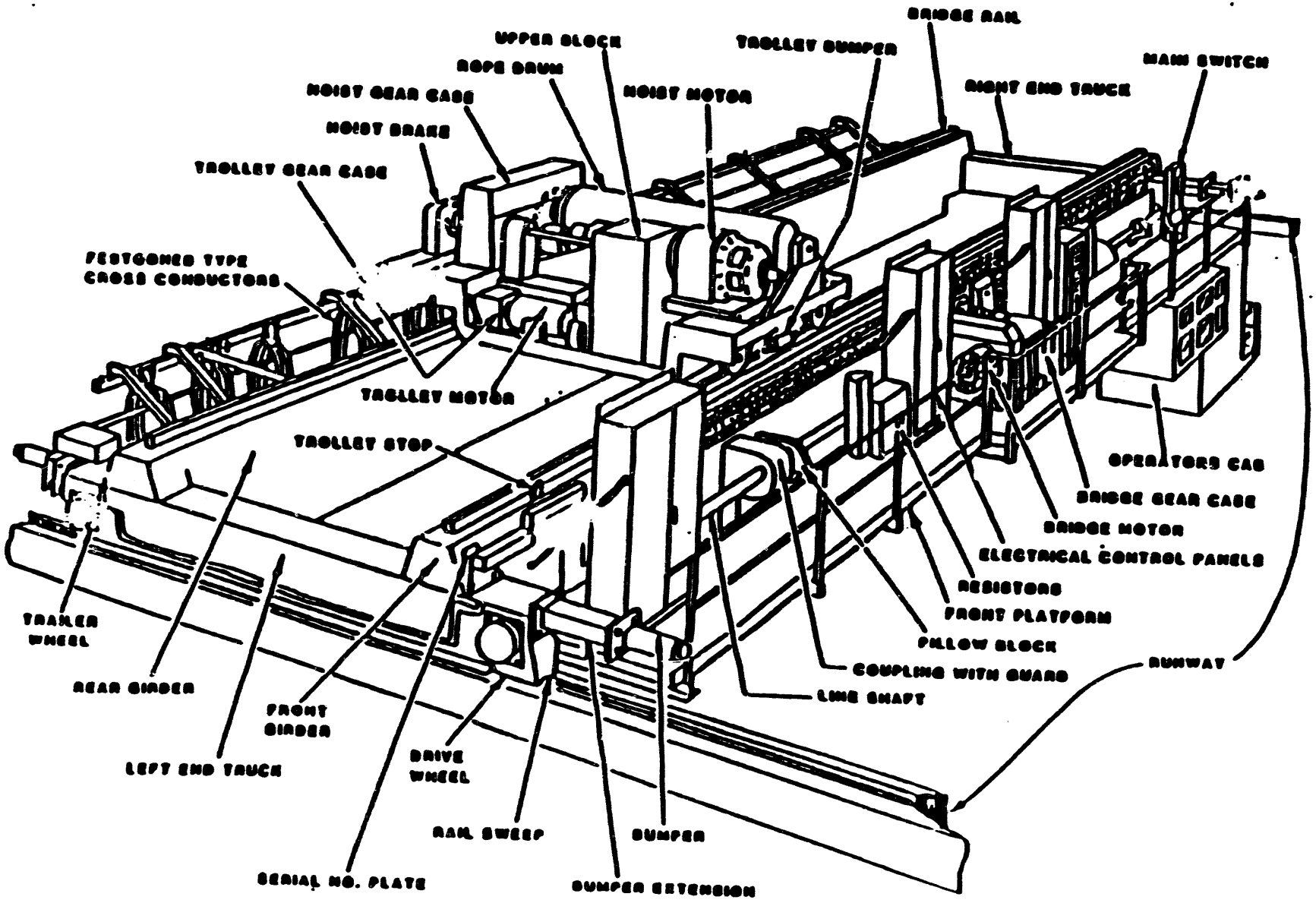

BRIDGE STRUCTURE

Adapted from U.S. Army Corps of Engineer's manual CRANE SAFETY

THE THREE CRANE MOVEMENTS

Bridge, Trolley, and Hoist are the accepted terms for the three motions which drive the standard electric overhead traveling crane (EOT). The runway on which the crane runs up and down the plant are called rails. These rails are attached to the building columns on either side of the bay.

BRIDGE CRANE

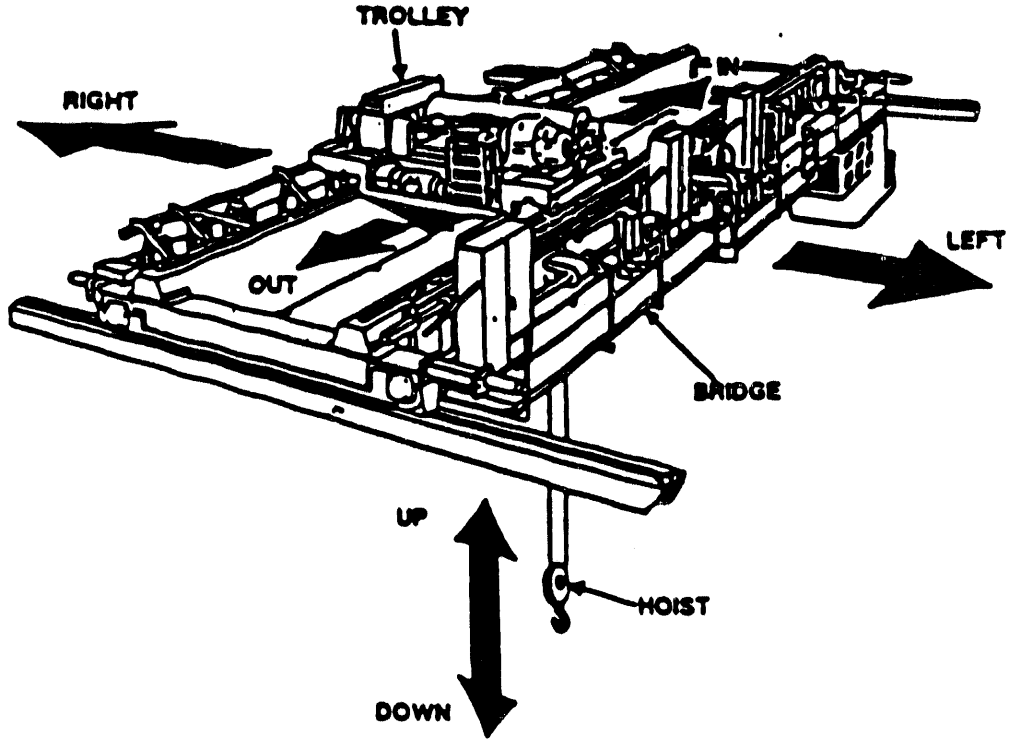

Adapted from U.S. Army Corps of Engineer's manual CRANE SAFETY

GANTRY

The gantry crane is a material lifting device similar to that of an overhead crane with the exception it is generally found in the outside environnment. The bridge for carring the trolley or trolleys is rigidly supported on two or more legs running on fixed rails or other runway types supported at the ground.

Trolley wheels support the gantry and propel the crane under power along the tracks. The load path servicing area is also rectangular and enjoys three separate load movement patterns of travel, trolley and hoisting the load.

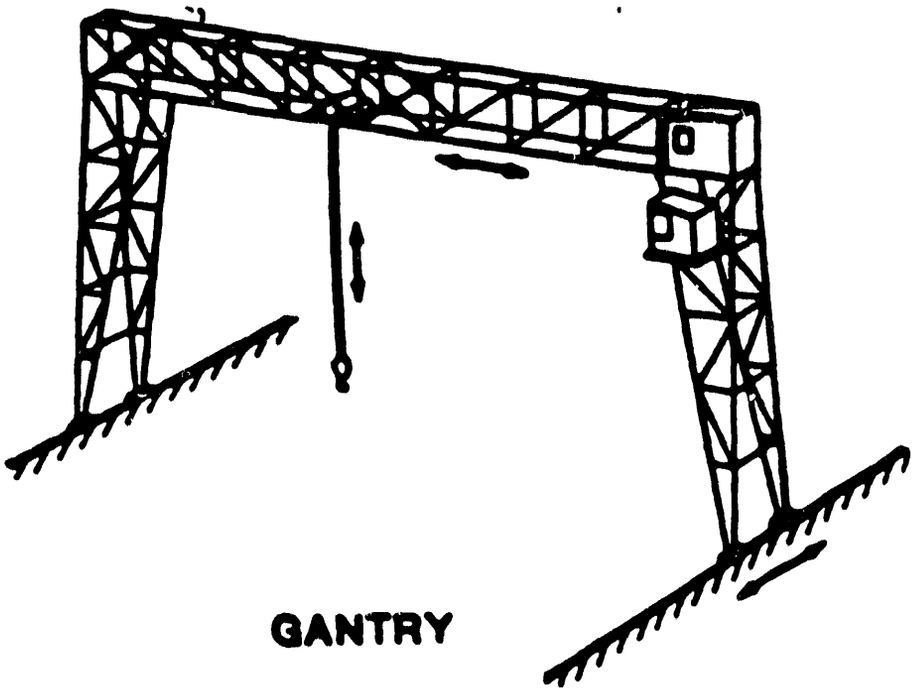

GANTRY

Adapted from U.S. Army Corps of Engineer's manual CRANE SAFETY

CANTILEVER GANTRY

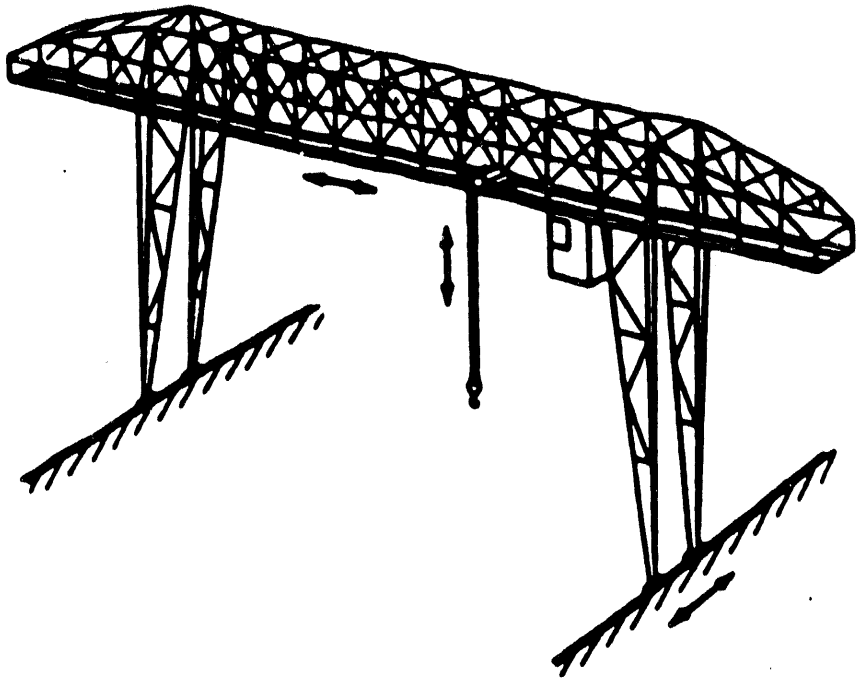

The cantilever gantry crane is a gantry crane in which the bridge girders or trusses extend transversely beyond the crane runway on one or both sides to provide load handling outside the fixed runway. The load path servicing area is rectangular and employs three separate load movement patterns of travel trolley and hoisting the load. These cranes are generally found on dock and piers transferring loads from ground to barge.

Adapted from U.S. Army Corps of Engineer's manual CRANE SAFETY

Semi-Gantry

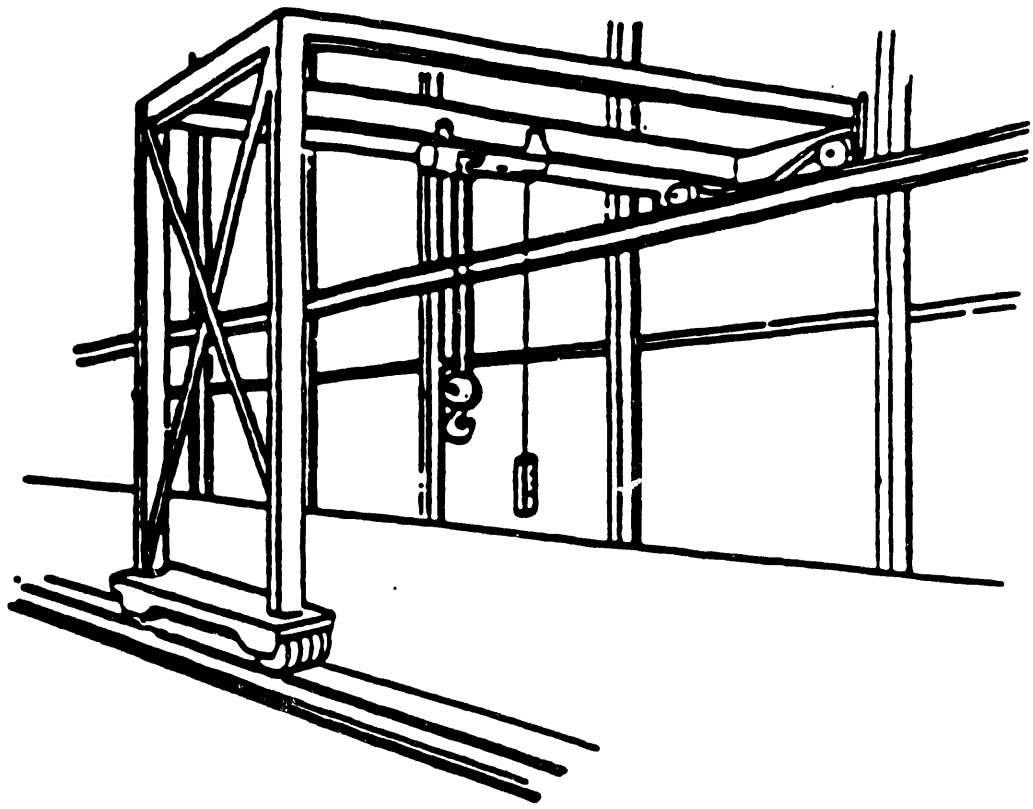

The semi-gantry crane is a gantry crane with one end of the bridge rigidly supported on one or more legs that run on a fixed rail or runway. The opposite end of the bridge is supported by a wheeled truck assembly running on an elevated rail or runway. The load path servicing area is rectangular and employs three separate load movement patterns of travel, trolley and hoisting the load. This crane is commonly used for warehouse and manufacturing environments.

Adapted from U.S. Army Corps of Engineer's manual CRANE SAFETY

WALL

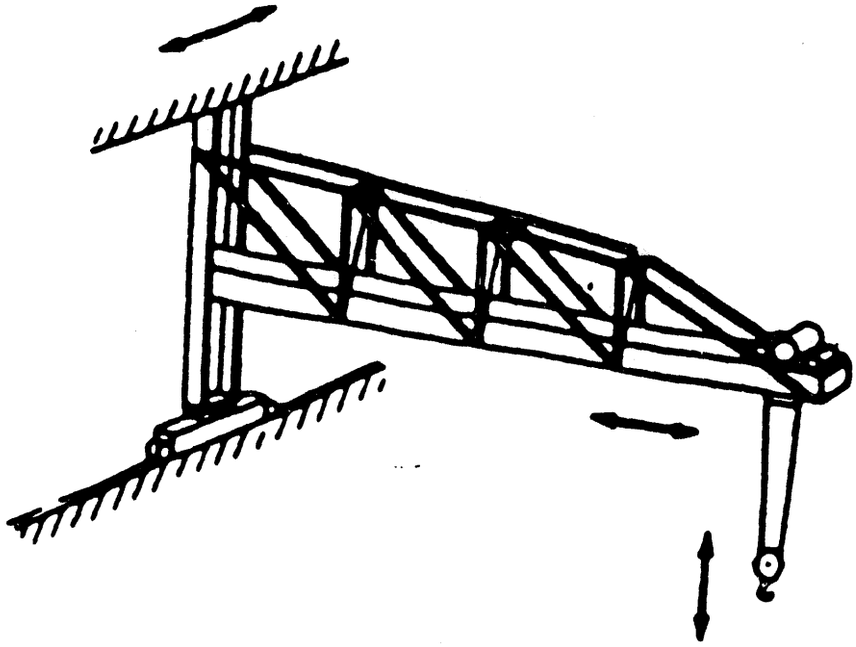

A wall crane is a crane that employs a jib assembly supported from a side wall or line of columns of a building. The crane is a traveling type and operates on a runway attached to the side wall or columns. The crane assembly may be with or without trolley travel. The load path servicing area is rectangular and employs two to three separate load movement patterns of travel, trolley, and hoisting the load depending on the design.

Adapted from U.S. Army Corps of Engineer's manual CRANE SAFETY

TROLLEY

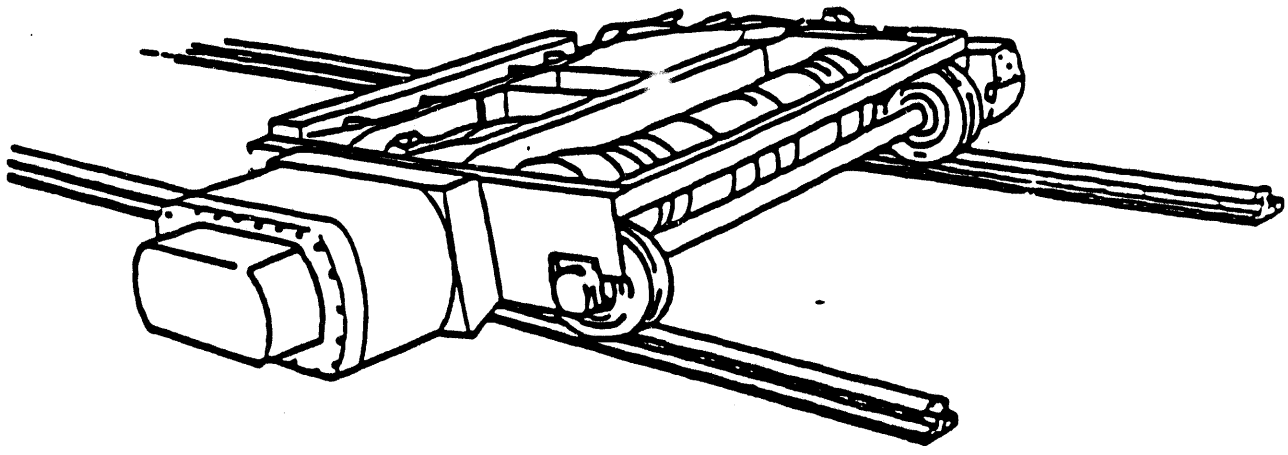

Unlike the hoisting-motor mechanism which is a stationary rotating unit, the trolley is like a small car on wheels running back and forth on the rails on top of the crane girders The trolley motor is usually geared to one of the axles carrying a wheel at each end. As such, it is more or less "free-running" and may continue to coast after power is cut off from the motor, due to momentum.

On equipment where the use of roller bearings have been installed to reduce friction, it has increased the coasting ability of the trolley. Electric brakes have been installed, keyed to the trolley-motor shaft, for braking.

The electric brake operates automatically like the hoist-motor brake. The power through the motor releases it. When the power is cut off from the motor, the brake is automatically applied by a spring to stop and hold the trolley. As long as power is off, the brake is set and keeps the trolley stationary.

On most cranes, there are no limit switches at the end of the crane to cut off power and stop the trolley motor. The crane rails are equipped with railstops or limit switches at each end. If stops are used, extreme care should be used to avoid striking these at high speed or the trolley may be derailed.

Adapted from U.S. Army Corps of Engineer's manual CRANE SAFET

TROLLEY HOIST COMBINATIONS

Single Trolley — Single Hoist

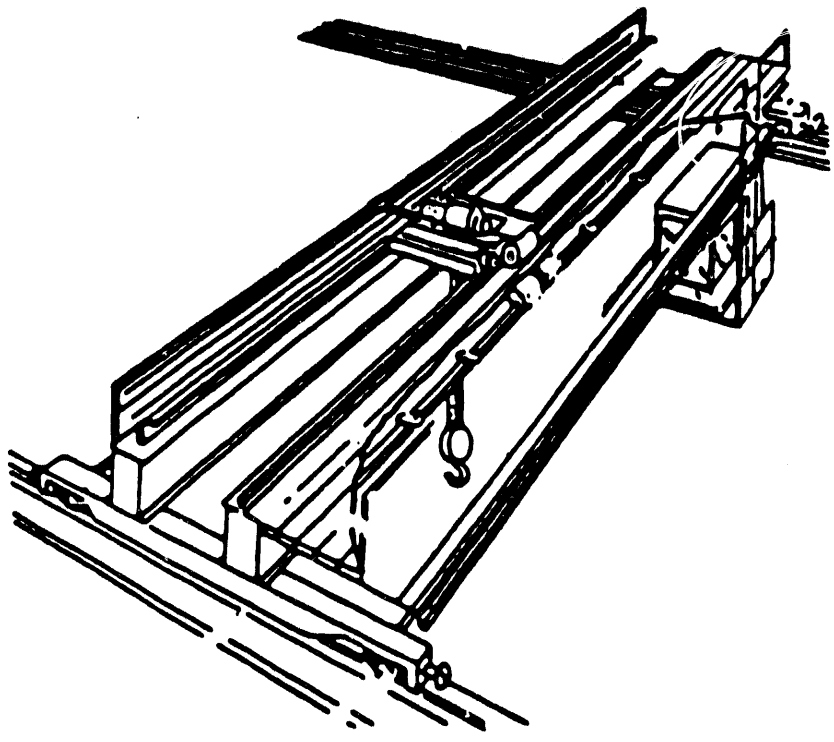

This hoist combination is a standard overhead electric traveling crane with a traveling trolley and a simple hook. While the illustration shows a floor controlled crane utilizing a pendant station, this type is often operated from a cage at one end of the bridge. Although it is built in all capacities required by industry, this crane generally is found in capacities under 20 tons.

Adapted from U.S. Army Corps of Engineer's manual CRANE SAFETY

Single Trolley — Double Hoist

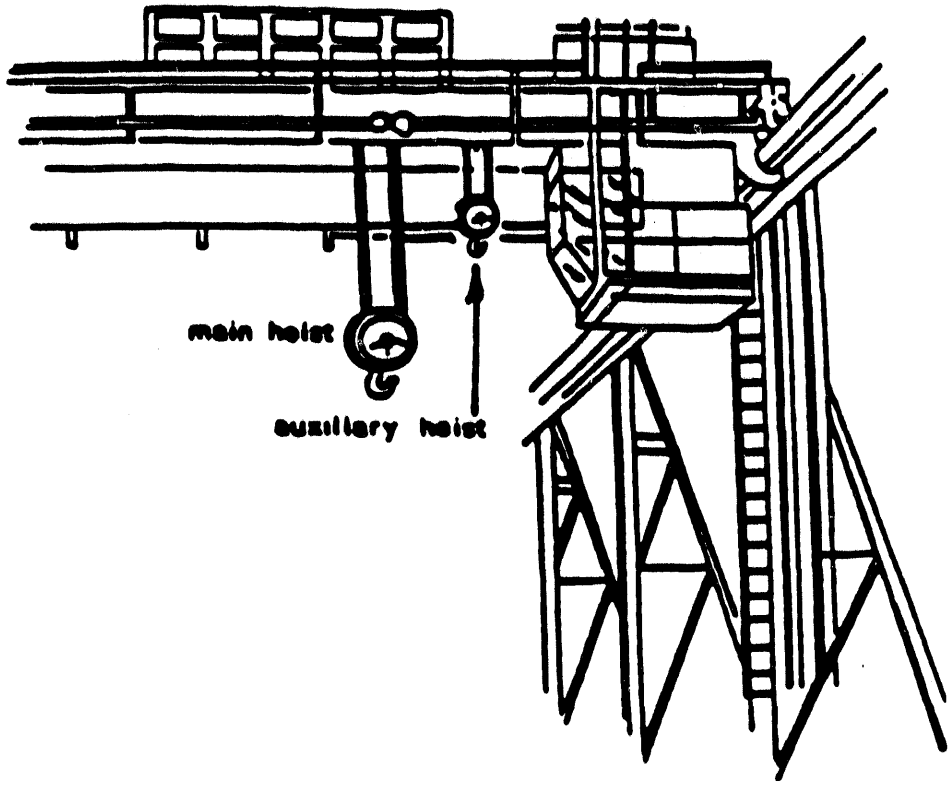

Most common in industry for loads in excess of twenty tons is the main and auxiliary hoist mounted on a single trolley. This standard design overhead traveling crane has the option of a fast speed low capacity auxiliary hoist or a lower speed high capacity main hoist. Combined hoist capacity will not exceed gross capacity of bridge.

Adapted from U.S. Army Corps of Engineer's manual CRANE SAFETY

Double Trolley — Single Hoist (each trolley)

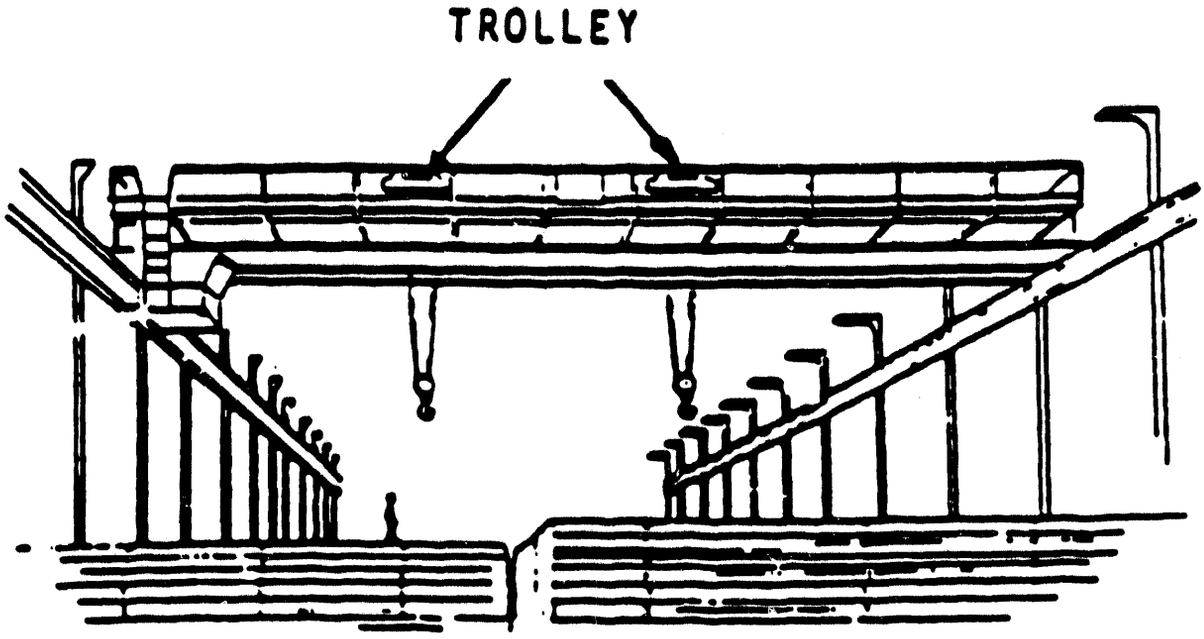

This hoist combination overhead crane is extremely versatile and generally if of major capacity capability. It is an electric traveling crane with two traveling trolleys. Some working environments employ both a main and auxiliary hoist to each trolley. However, generally the above illustration is most common. Considered often as a speciality crane, it is usually found handling very heavy or long awkward loads. It is built in all capacities and spans and frequently is employed in railroad shops, steel fabrication and large power utility plants.

Adapted from U.S. Army Corps of Engineer's manual CRANE SAFETY

BRIDGE

Similar in many respects to the crane-trolley, the bridge motion travels on wheels along the runway rails attached to the columns of the plant-building structure. Four wheels or sets of wheels, support the crane; one on each corner of the crane with two of them (one on each end) being connected by a common shaft running the length of the crane. This shaft is keyed to the bridge motor. On large cranes, two motors may be used and are arranged for simultaneous operation from one controller or one master switch.

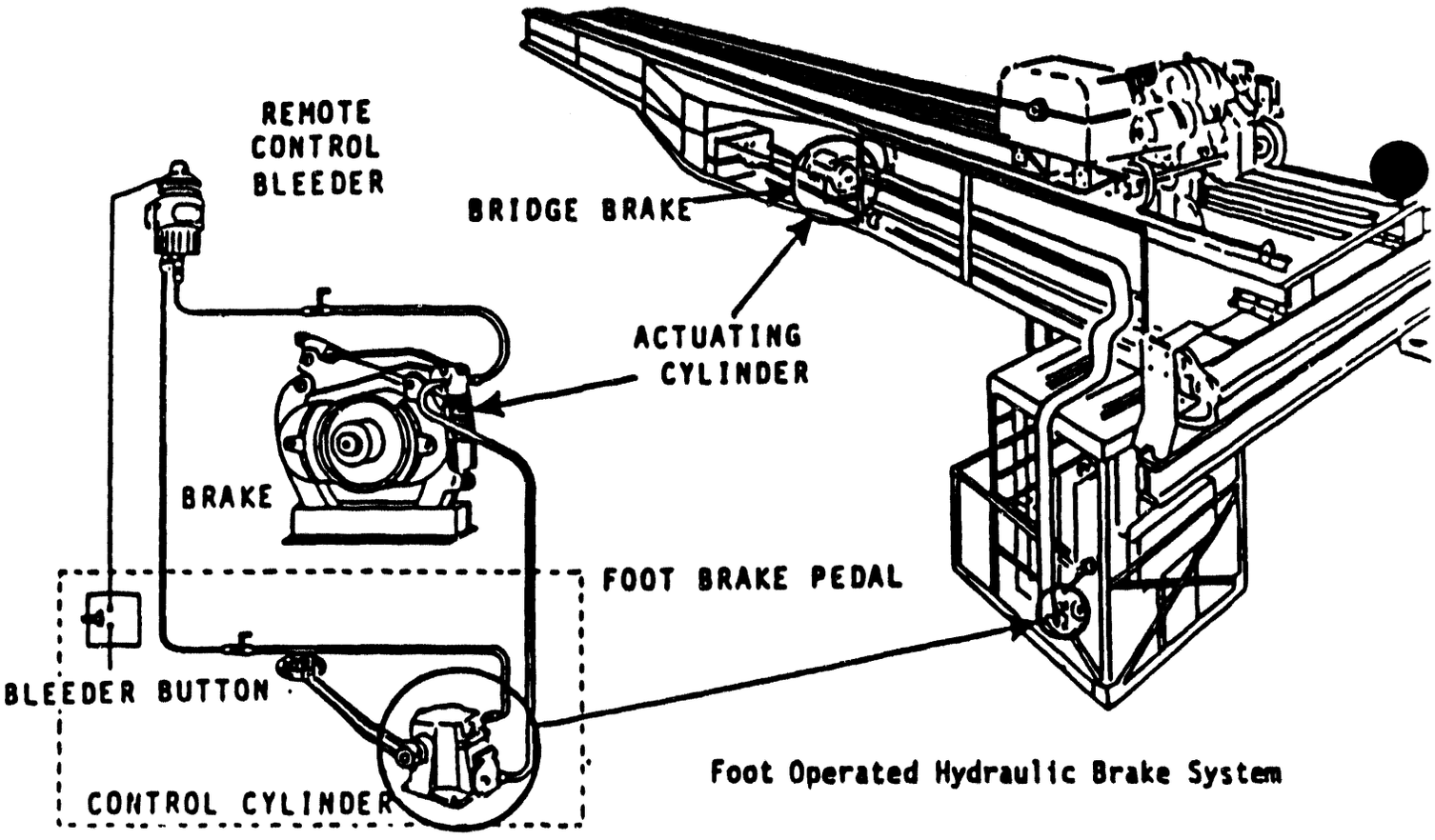

Foot Operated Hydraulic Brake System

As shown, the bridge structure is long and narrow — not compact like the [illegible] which carries the hoisting mechanism. The bridge itself is heavier than the troll[illegible] in addition, has to carry the weight of the trolley and also the load. It should, therefore, be started slowly and also stopped gradually to avoid misalignment or ske[illegible] the bridge.

The bridge motion may be free-running similar to the trolley, and likewise, may not have limit switches at each end of the runway to cut off power and stop the crane. Spring bumpers are usually attached on the outside corners of the crane, but these should not be depended upon to stop the crane. They are a safety measure only to protect the end of the building or another crane on the same runway.

When approaching the extreme end of the runway, bring the crane completely to rest. Then restart and move slowly until the bumpers just touch the bumper stop attached to the end of the runway rails.

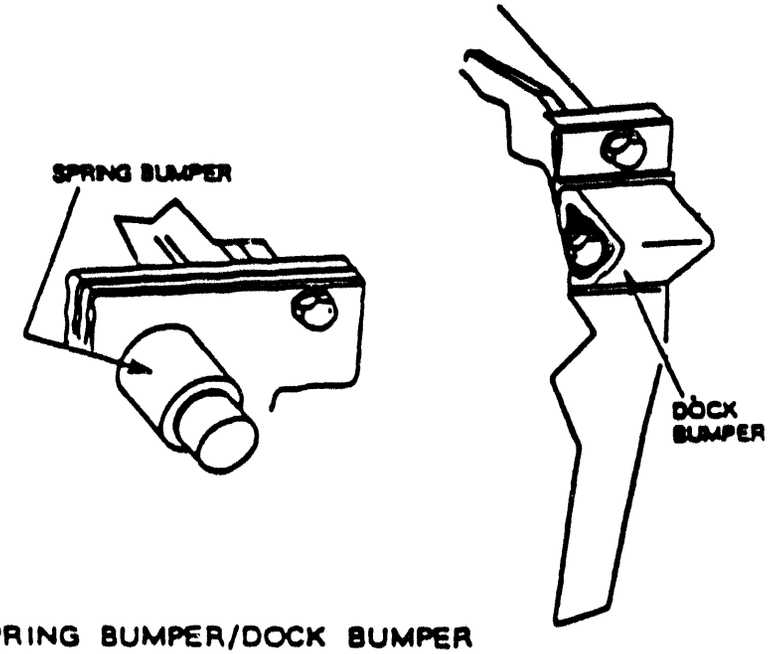

SPRING BUMPER/DOCK BUMPER

HOIST LIMIT SWITCH

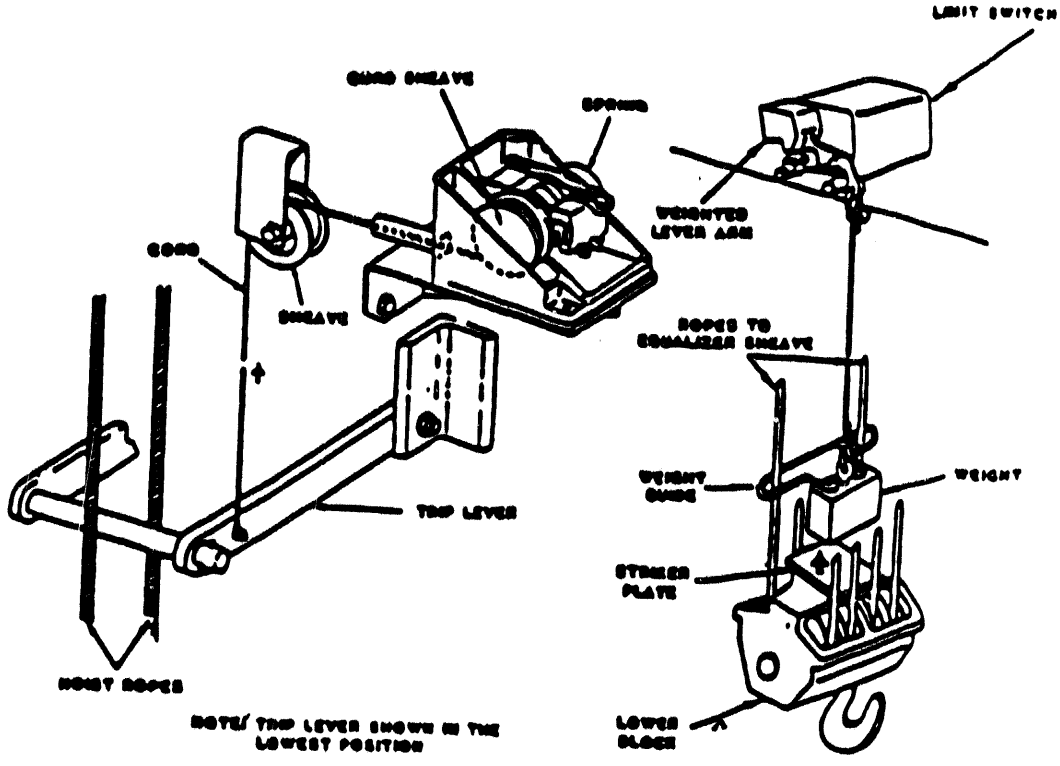

Typical arrangement of block operated switch

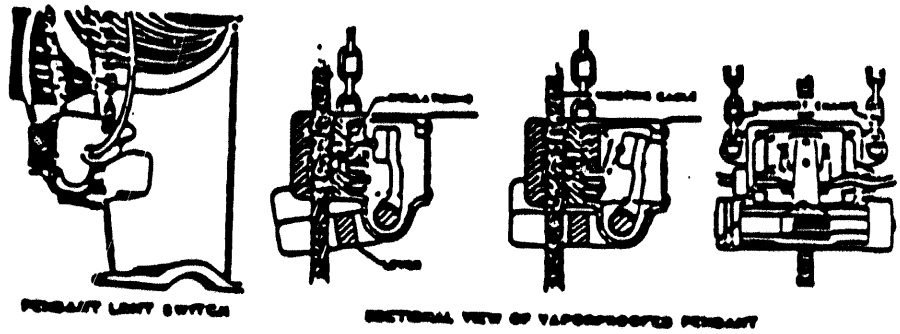

PENDANT LIMIT SWITCH

SECTIONAL VIEW OF VAPORPROOFED PENDANT

To prevent over-hoisting, cranes are regularly equipped with hoist limit switches. One type is operated by the crane's hook block. The other type is connected to the drum and is set to trip after a given number of revolutions of the drum. Limit switches are arranged to disconnect power from the motor and this automatically sets the electric holding brake. When the limit switch has tripped, reverse the controller to lower, using an inching movement until the limit switch is reset.

Adapted from U.S. Army Corps of Engineer's manual CRANE SAFETY

Some limit switches not only disconnect the motor from the line, but bring it to a quick stop by an electrical braking connection. This avoids excessive drift and permits the limit switch to be adjusted for close clearance between hook block and drum, making high headroom available and eliminating frequent limit switch operation when high lifts are numerous.

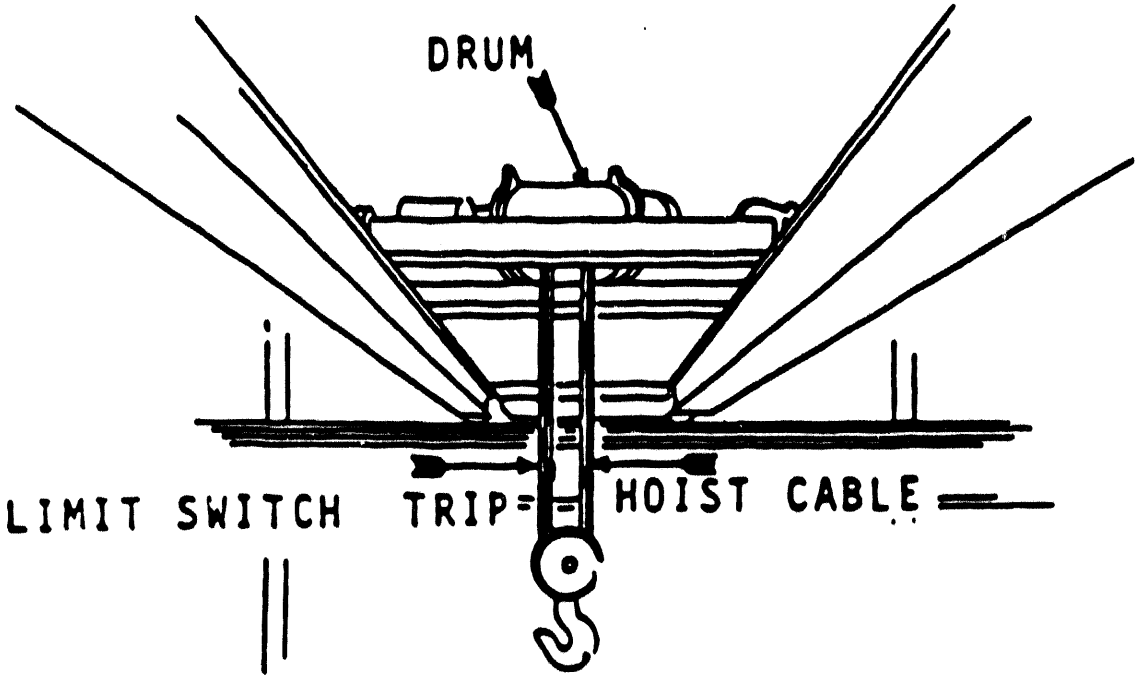

Although there is a limit switch in the "up" direction, bear in mind that there may not be a limit switch in the downward direction. If the motor is allowed to run after the hook touches the floor, the wire rope will run off the hoisting drum and start to wind up in the opposite direction.

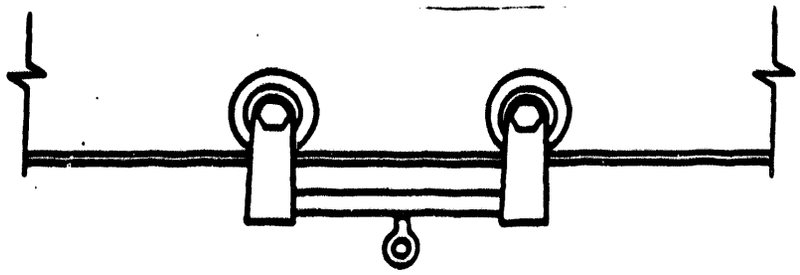

TYPICAL MONORAIL CARRIER

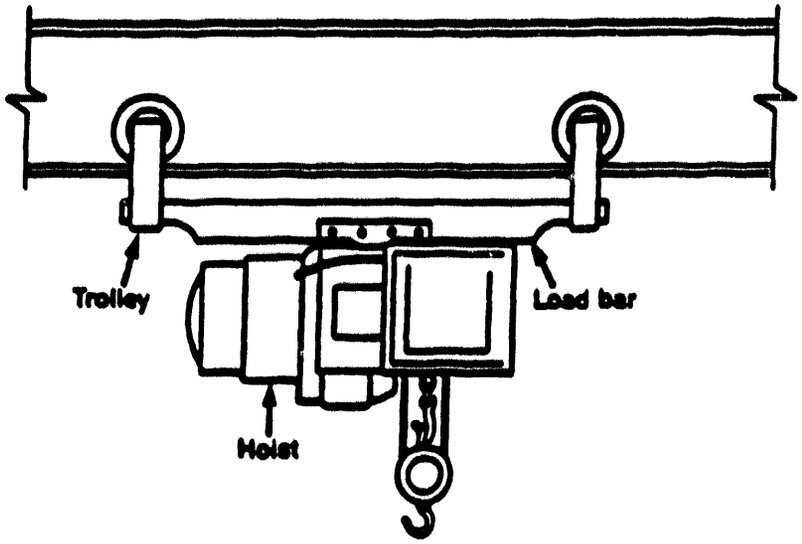

POWER OPERATED HOIST

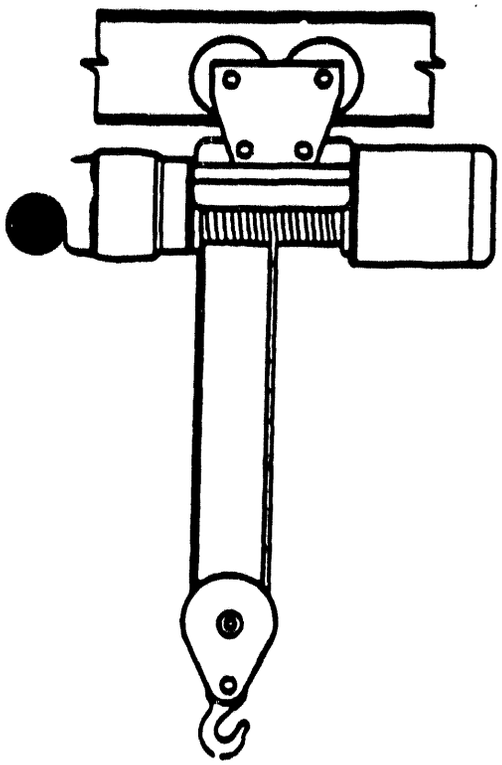

LECTRIC HOIST WITH PLAIN
OLLEY ON STANDARD I BEAM

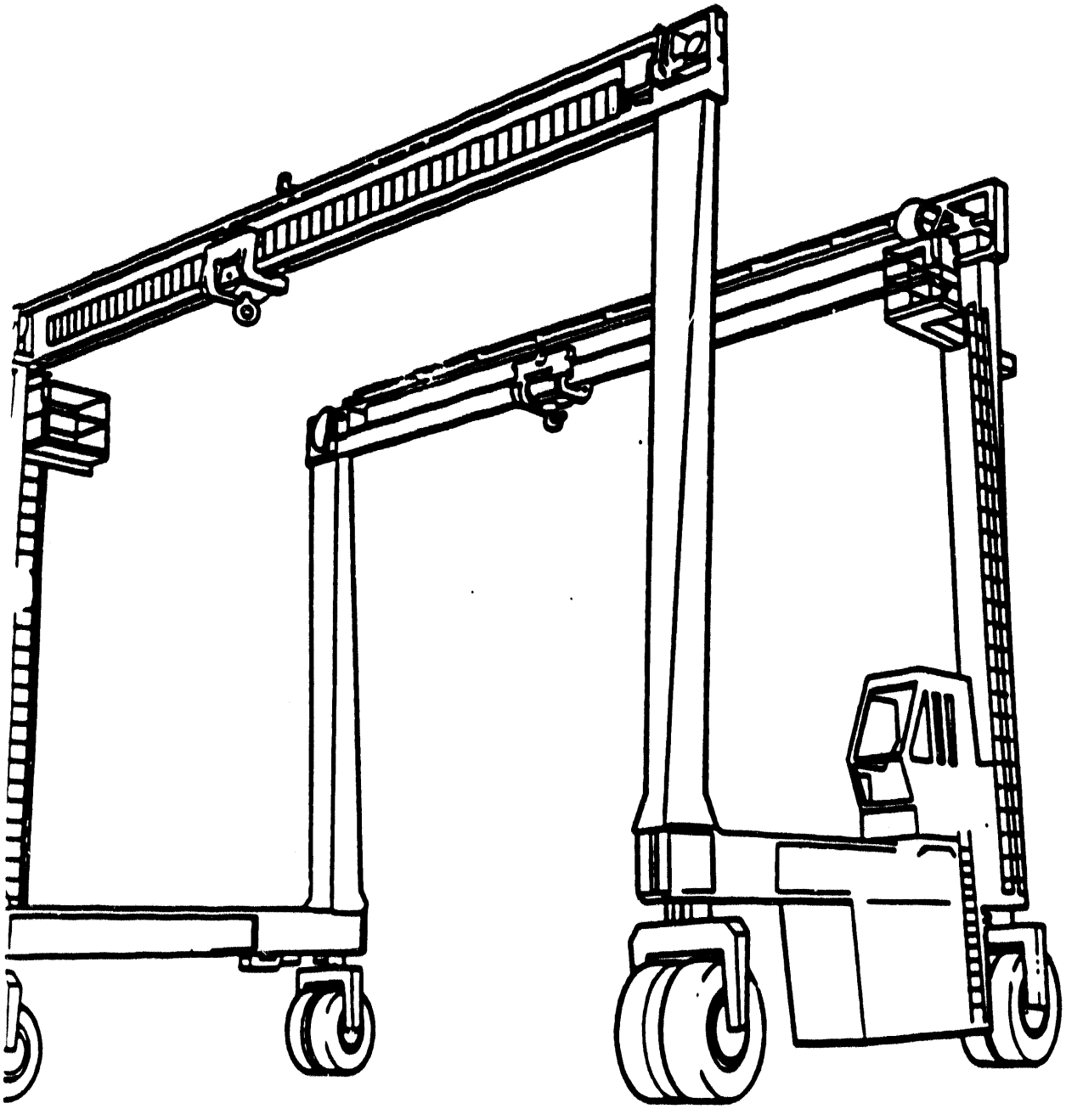

Straddle Cranes

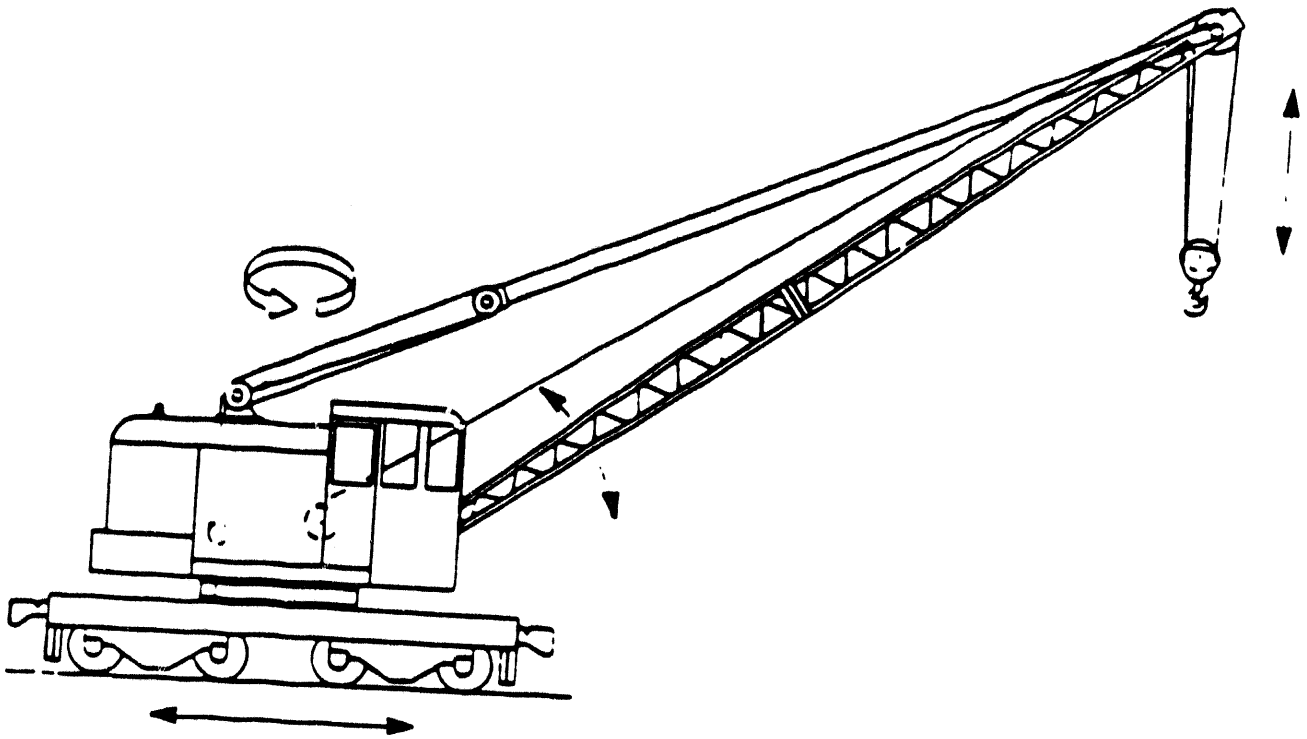

LOCOMOTIVE CRANE

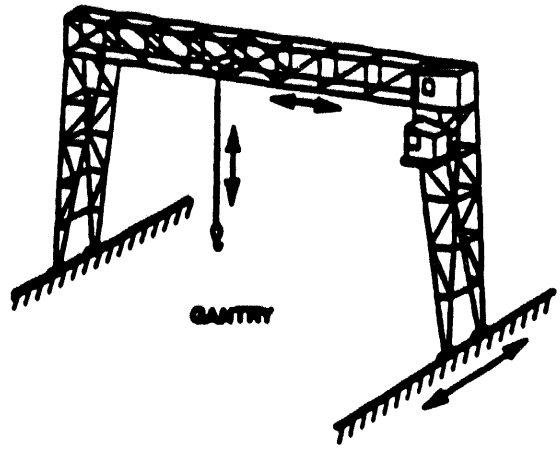

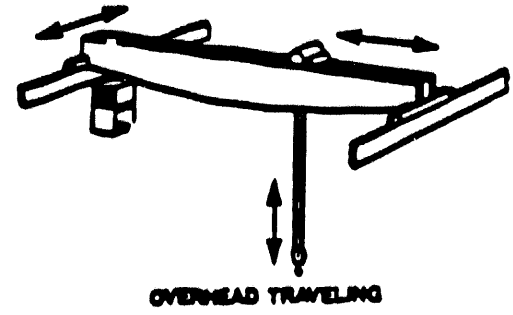

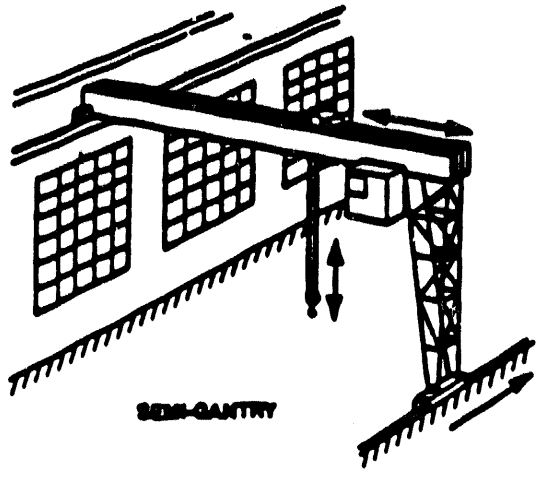

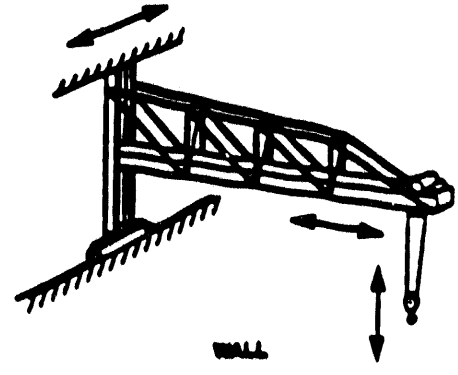

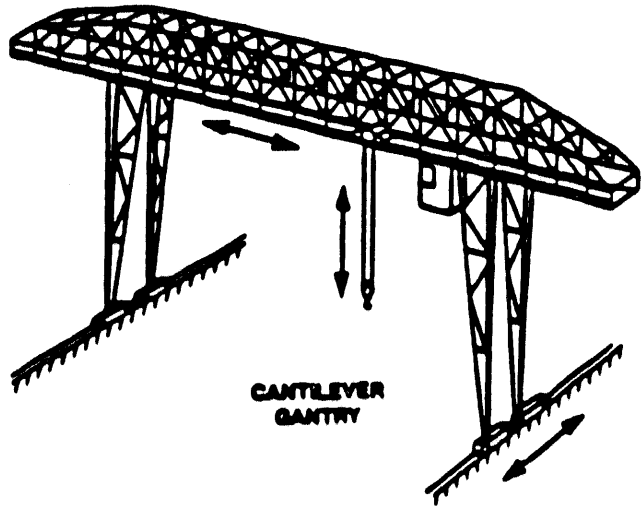

Overhead Track-mounted Cranes

Appendix 13-1. Types of Cranes Generally Found in the Workplace.

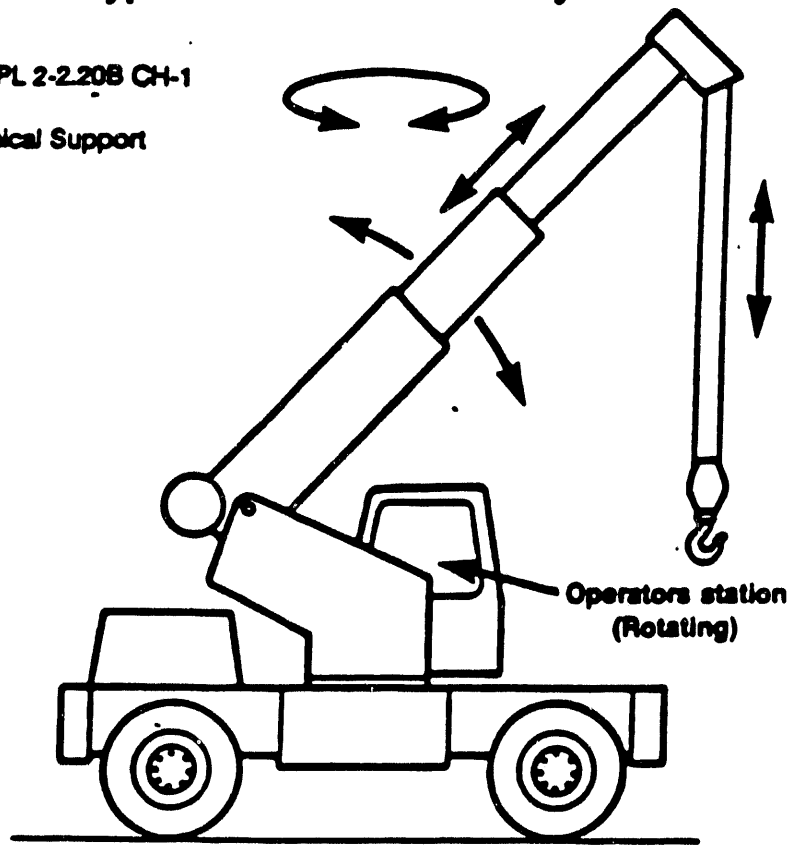

Figure 13-A1. Wheel-mounted Crane: Telescoping Boom (Single Control Station).

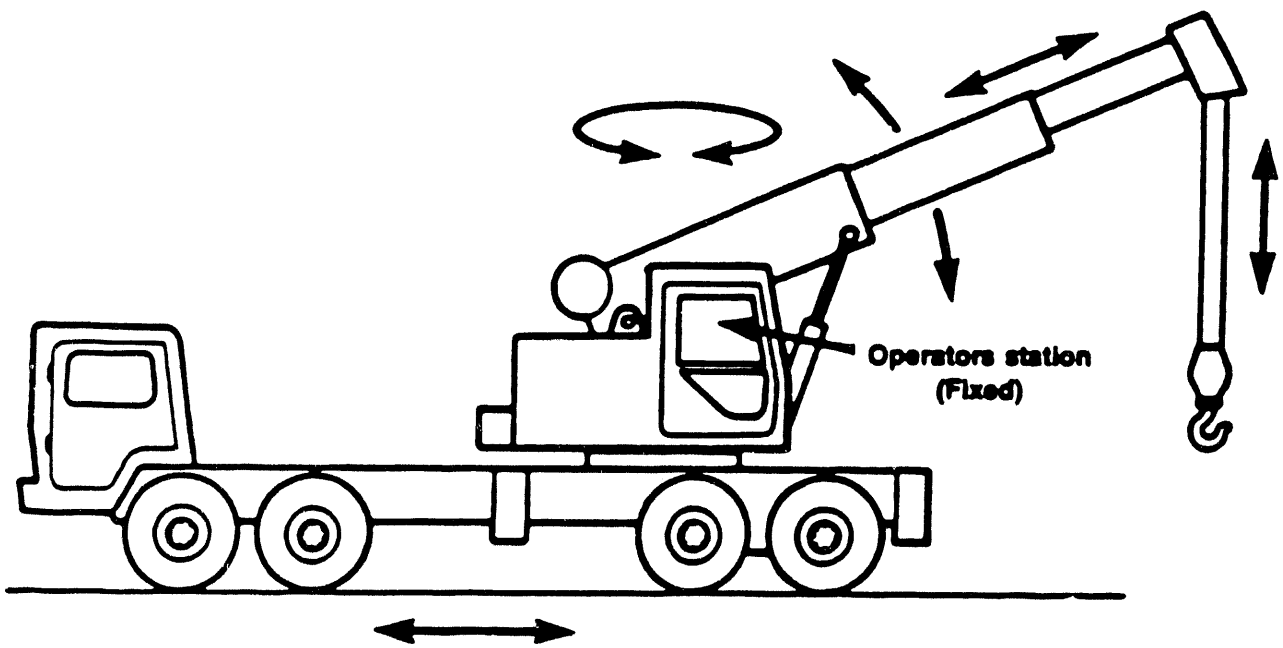

Figure 13-A2. Wheel-mounted Crane Telescoping Hydraulic Boom (Multiple Control Station)

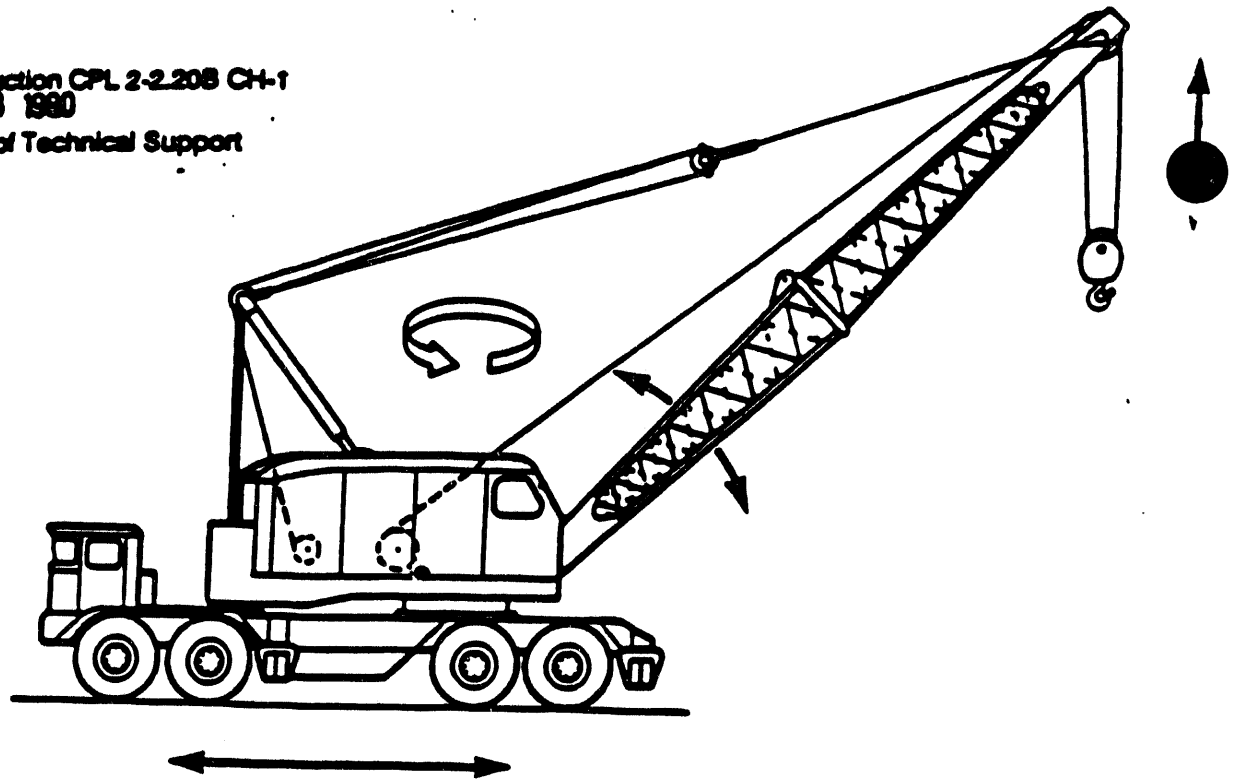

Figure 13-A3 Wheel-mounted Crane Latticework Boom (Multiple Control Station)

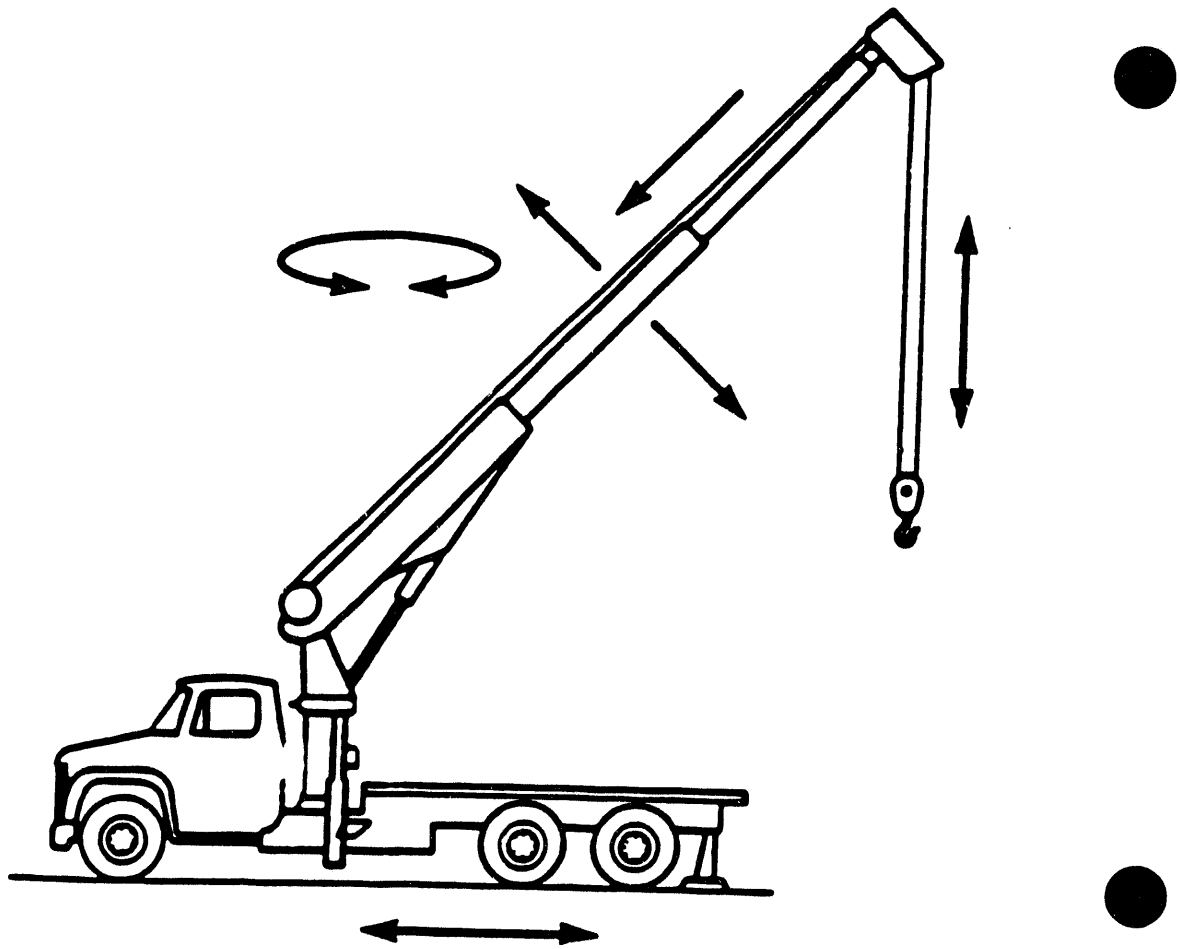

Figure 13-A4. Commercial Truck -mounted Crane with Hydaulic Boom

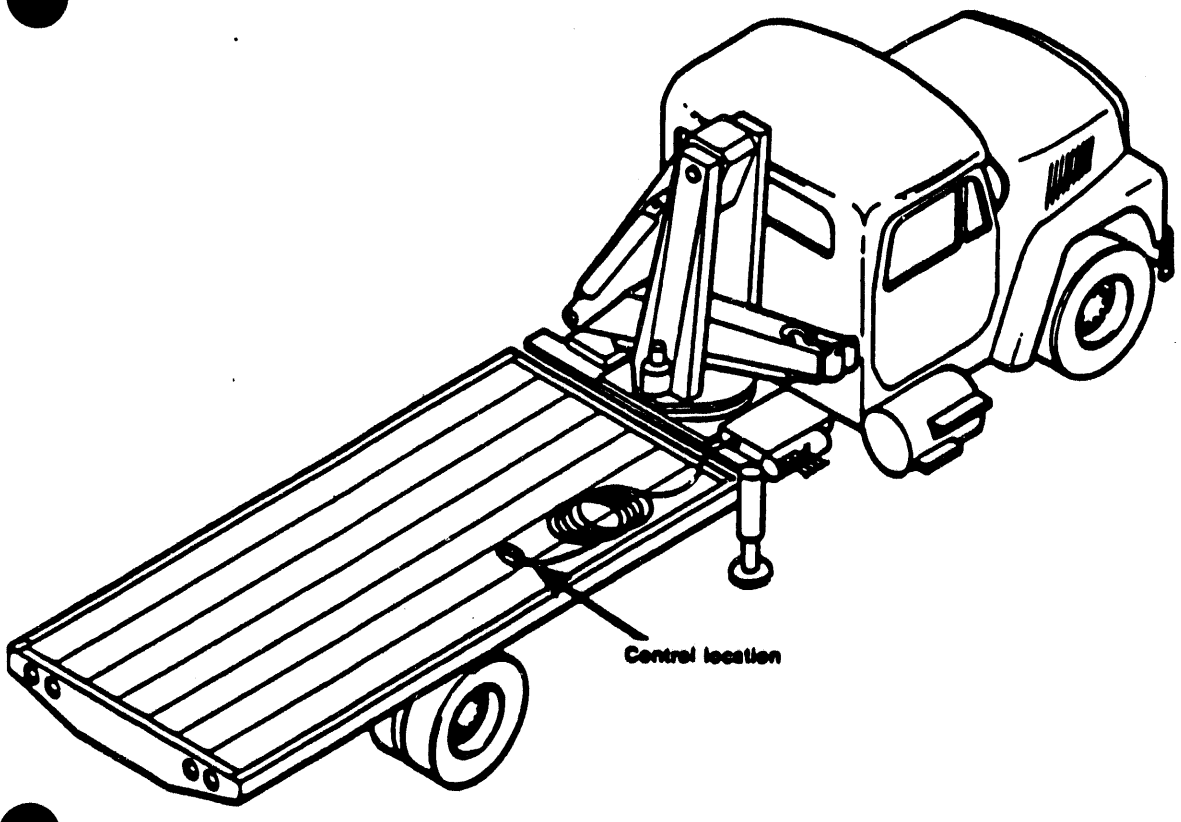

Figure 13-A5. Commercial Truck -mounted Crane with Articulated Boom

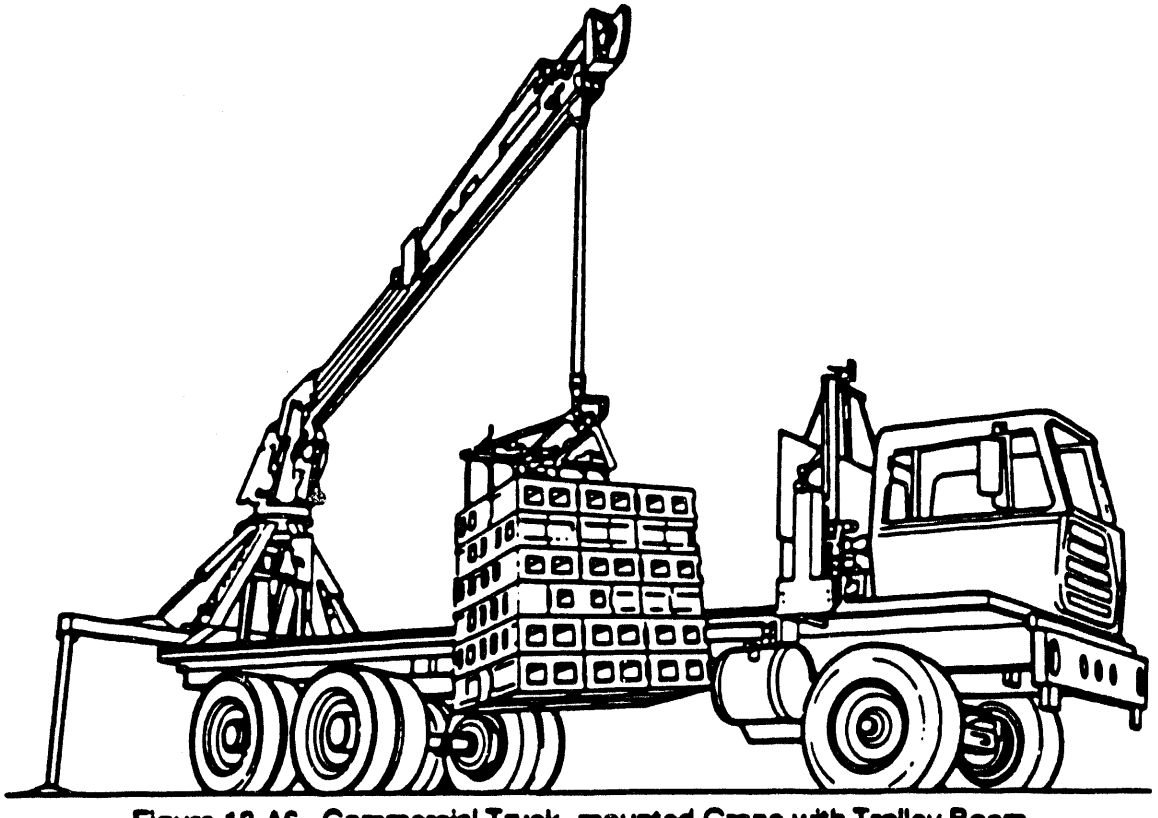

Figure 13-A6. Commercial Truck -mounted Crane with Trolley Boom

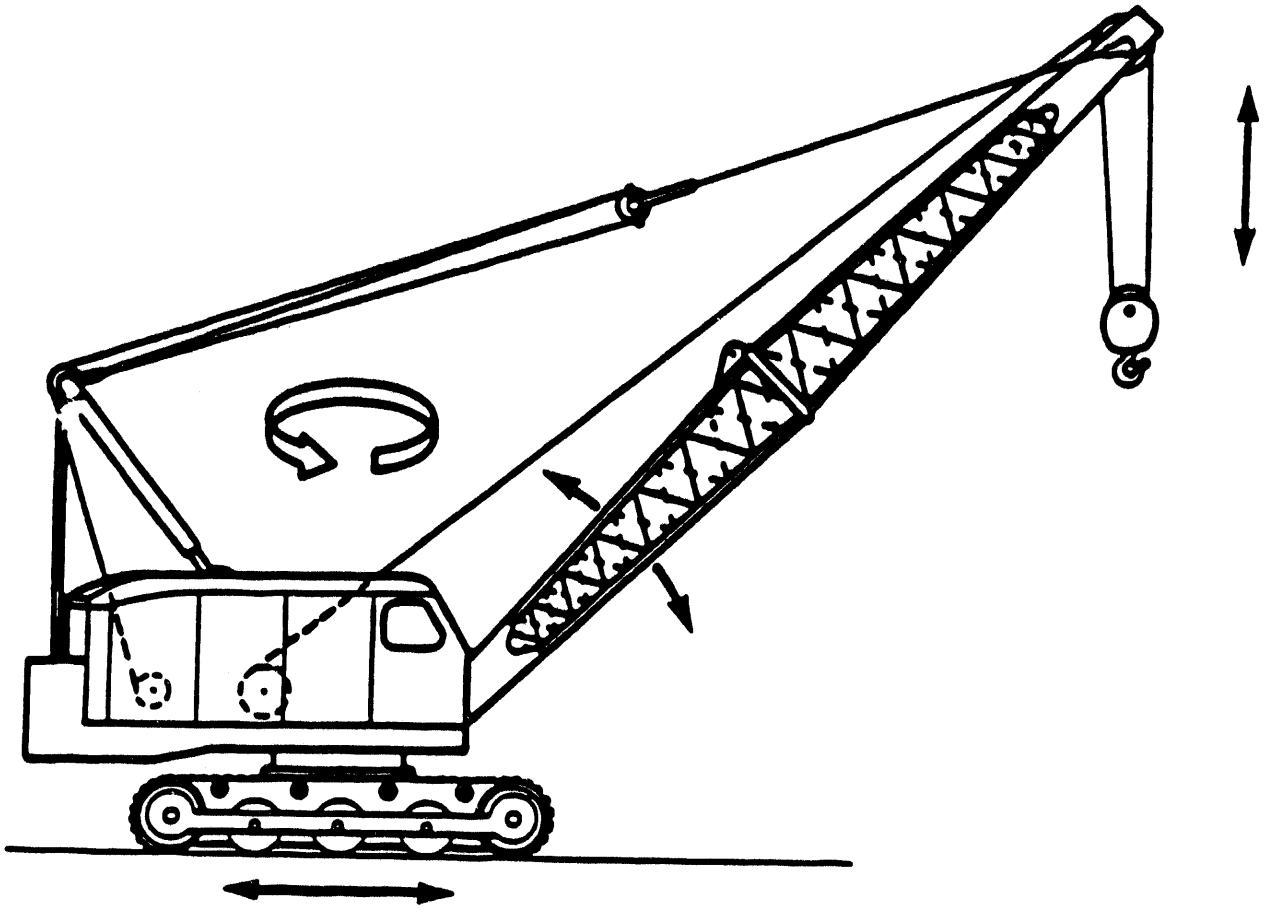

Figure 13-A7. Crawler -mounted Latticework Boom Crane

TYPES OF DERRICKS (STATIONARY CRANES)

A-Frame Derrick

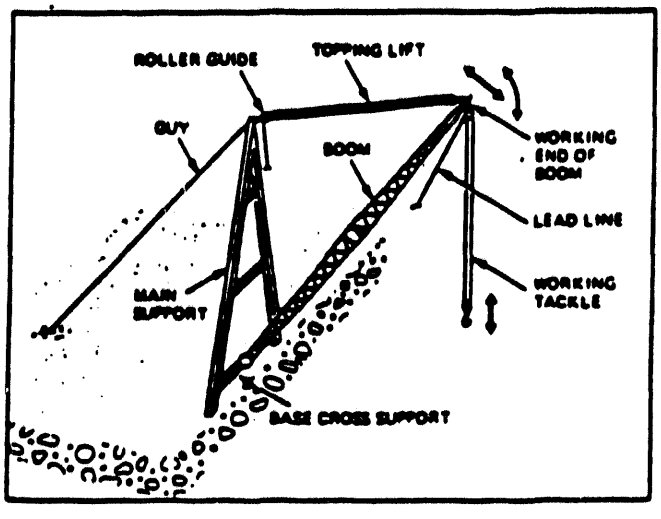

The A-frame derrick gets its name from the shape of its main support. The main support, as shown in the illustration, is triangular with the base resting on the ground or floor. This triangular support frame looks like the letter A. A-frames for light loads are made from wood, but heavy-duty A-frames are made from steel.

A-frames are mounted in a position that prevents the base from moving or shifting under load. This device allows only a limited amount of horizontal load movement. Lifting is its primary job. Small A-frame derricks are manually operated. The larger derricks use air or electric power for lifting their heavier loads.

Guyed and Stiff-Leg Derrick

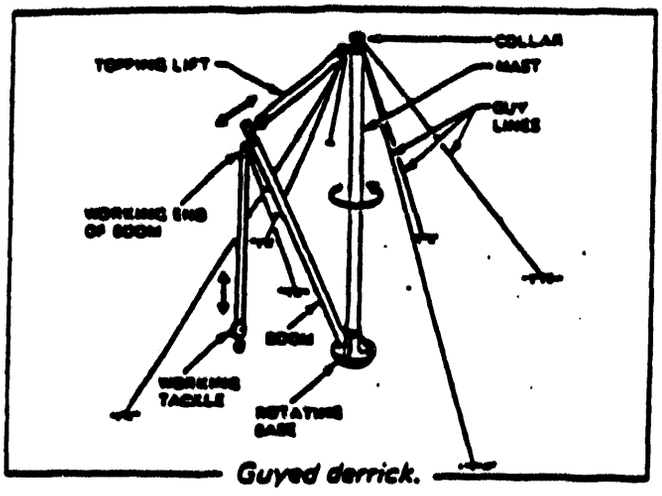

Guyed derrick.

Stiff-leg derrick.

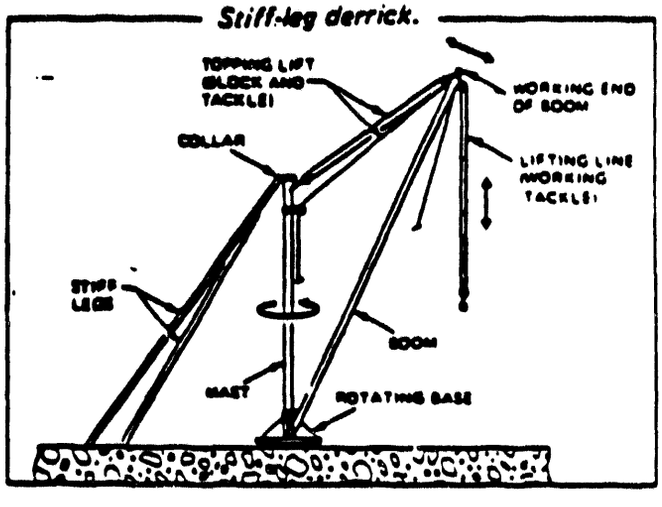

The guyed and stiff-leg derricks are basically a combination of the A-frame and gin pole. But they are more useful in rigging than the A-frame and the gin pole because they permit full circle horizontal load movement, and can lift heavier loads.

The main support for both the guyed and stiff-leg derricks consists of a mast mounted on a freely rotating base. The guys and stiff-leg supports fasten directly to a collar, and the mast turns inside this collar. The boom fastens to the base. The pin fastening the boom to the base allows the boom to move in a vertical direction only. You will normally find this connection made using a welded plate drilled to form an eye. The base (with a corresponding eye) inserts in the plate, and fastens with a bolted pin.

Breast Derrick

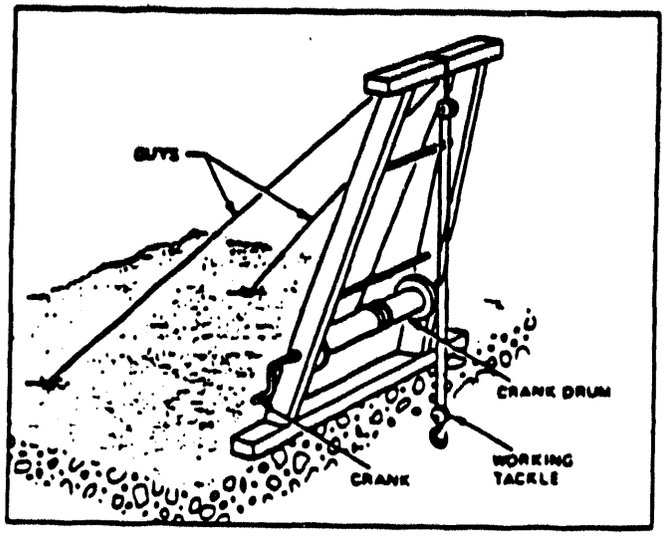

The breast derrick, less common than the guyed and stiff-legged types, is basically a form of the A-frame with added guy supports. A hand-operated crank drum normally supplies the power for this type of derrick. The breast derrick's most common use is in the roofing industry. For roofing work, you mount the derrick on the roof and use it to raise materials from the ground to the work area.

Gin Pole Derricks

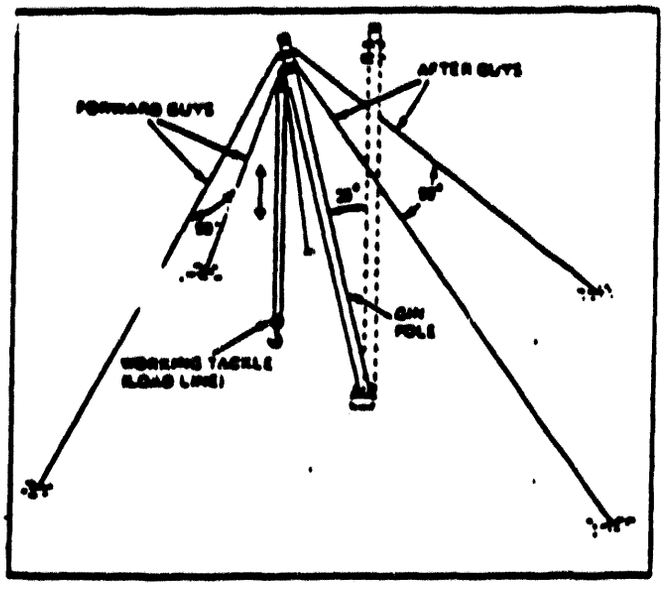

Gin pole derricks are single pole units with one end firmly secured at the base to prevent movement. The illustration shows the construction of a gin pole. Use gin poles only for light working loads. The gin pole is a good choice when you need a temporary hoist to raise and lower a number of light loads. Several men can set up a small or portable unit by hand.

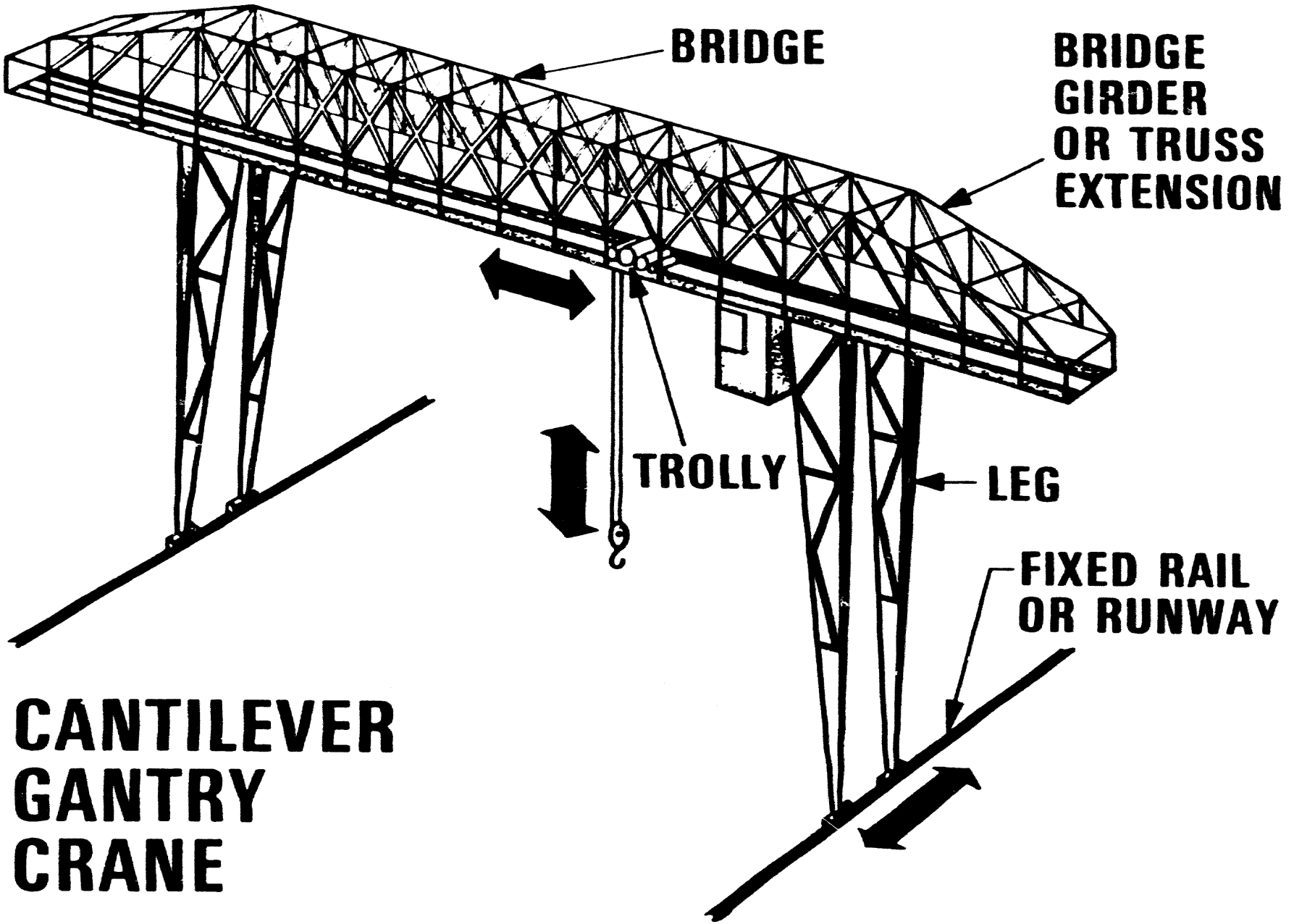

CANTILEVER GANTRY CRANE

MH-1

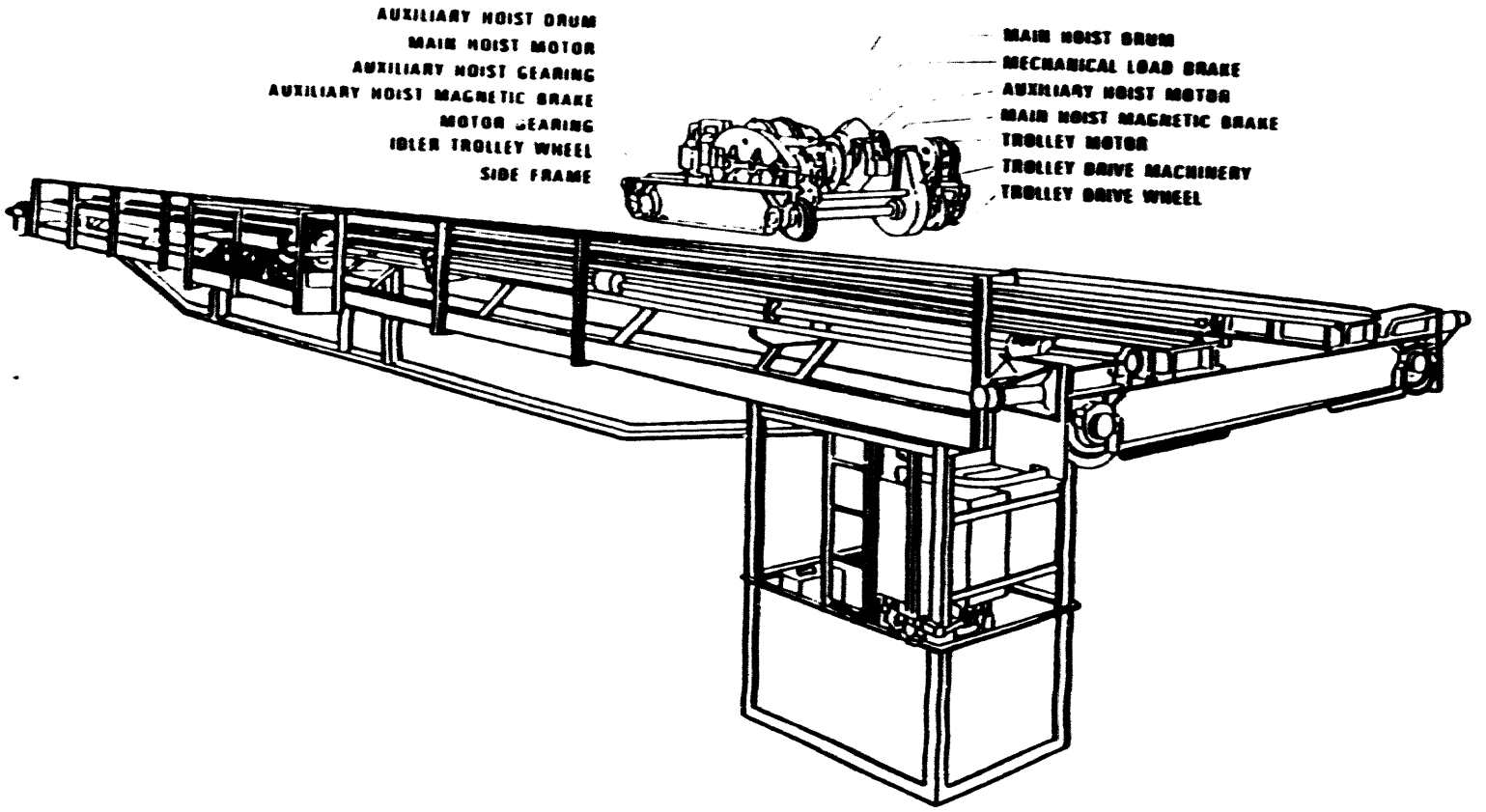

OVERHEAD TRAVELING CRANE

MH

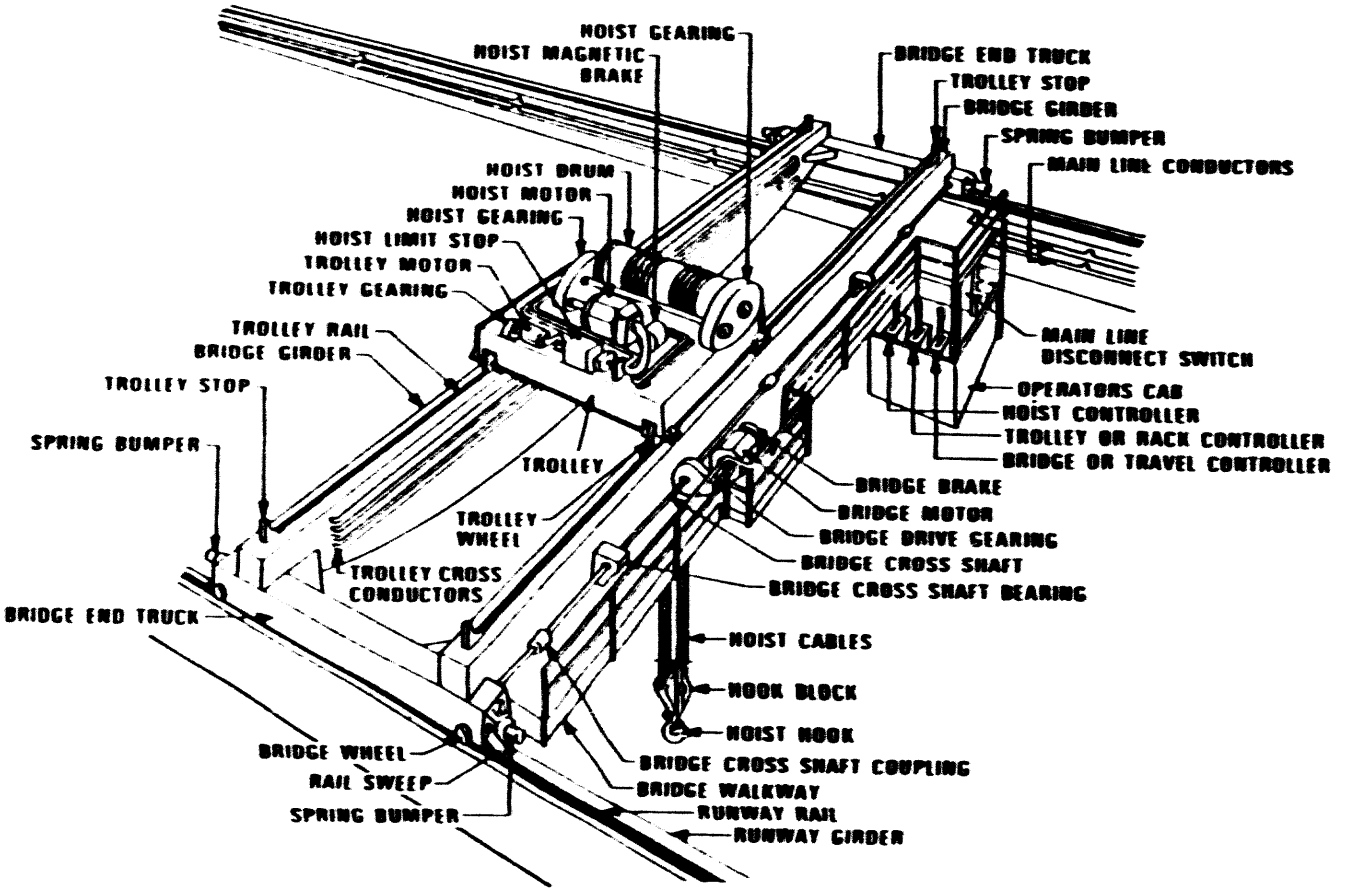
HOIST GEARING
HOIST MAGNETIC BRAKE
BRIDGE END TRUCK
TROLLEY STOP
BRIDGE GIRDER
SPRING BUMPER
MAIN LINE CONDUCTORS
HOIST DRUM
HOIST MOTOR
HOIST GEARING
HOIST LIMIT STOP
TROLLEY MOTOR
TROLLEY GEARING
TROLLEY RAIL
BRIDGE GIRDER
TROLLEY STOP
SPRING BUMPER
MAIN LINE DISCONNECT SWITCH
OPERATORS CAB
HOIST CONTROLLER
TROLLEY OR RACK CONTROLLER
BRIDGE OR TRAVEL CONTROLLER
TROLLEY
BRIDGE BRAKE
BRIDGE MOTOR
TROLLEY WHEEL
BRIDGE DRIVE GEARING
BRIDGE CROSS SHAFT
TROLLEY CROSS CONDUCTORS
BRIDGE CROSS SHAFT BEARING
BRIDGE END TRUCK
HOIST CABLES
HOOK BLOCK
HOIST HOOK
BRIDGE WHEEL
BRIDGE CROSS SHAFT COUPLING
RAIL SWEEP
BRIDGE WALKWAY
SPRING BUMPER
RUNWAY RAIL
RUNWAY GIRDER

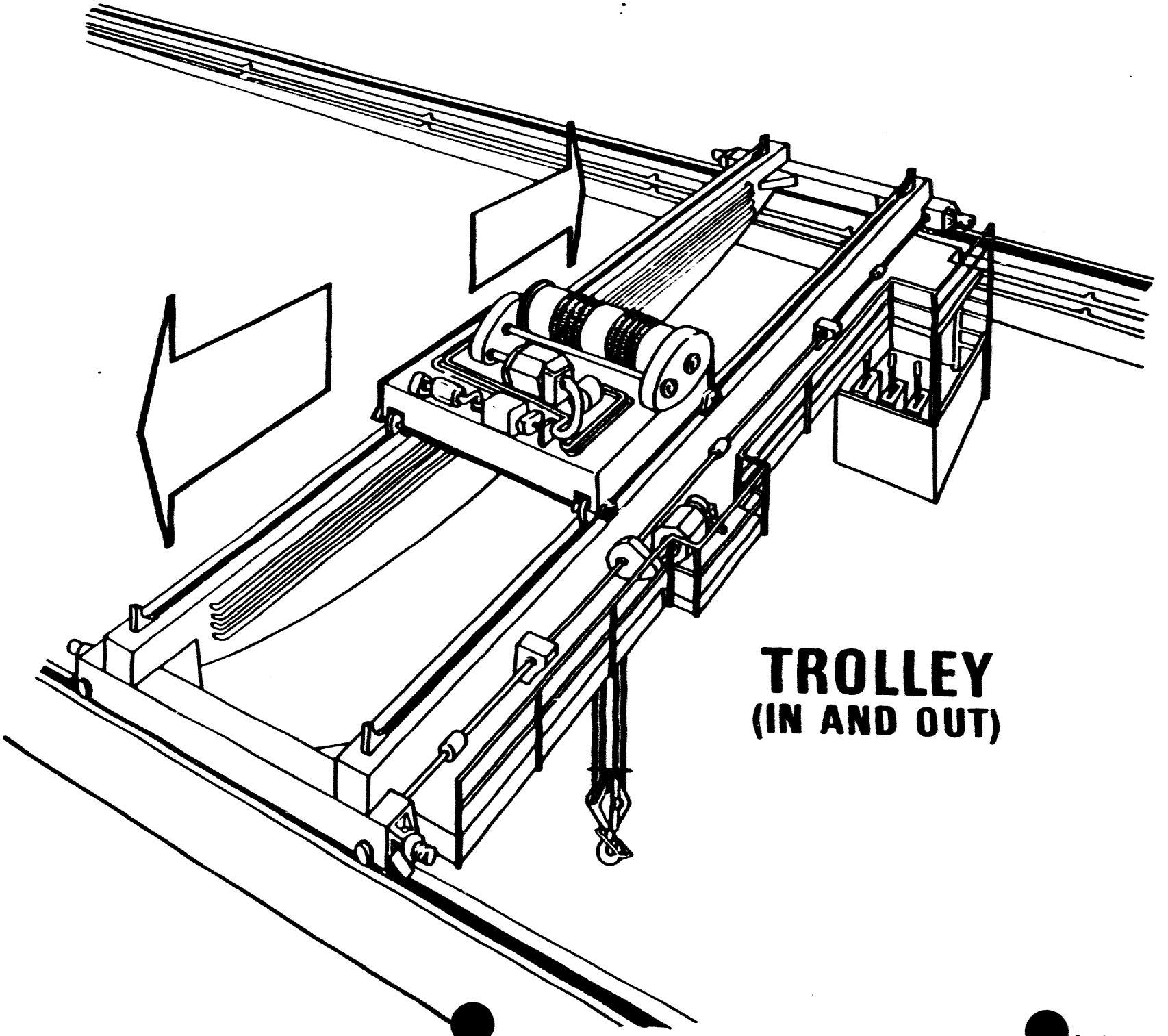

TROLLEY
(IN AND OUT)

MATERIAL HANDLING STUDENT HANDOUT

GLOSSARY OF WIRE ROPE TERMS

OSHA STANDARDS REFERENCES
CFR 1910 .179-.182 &.184
CFR 1926 .251 & .550

Prepared
July, 1985

Glossary of Wire Rope Terms

ABRASION — Surface wear on the wires of a wire rope

ACCELERATION STRESS — Additional stress imposed on a wire rope due to increasing the velocity of the load

AIRCRAFT CABLES — Strands, cords and wire ropes made of special strength wire primarily for aircraft controls and [illegible] industry

ALTERNATE LAY — Lay of a wire rope in which the strands are alternately regular and Lang Lay

AREA, METALLIC — Sum of the cross-sectional areas of individual wires in a wire rope or strand

ARMORED ROPE — Rope with individual strands spirally wrapped with flat steel wire

BACK-STAY — Guy used to support a boom or mast; or that section of a main cable, as on a suspension bridge, cableway, etc., leading from the tower to the anchorage

BAIL — A "U-shaped" member of a bucket, socket or other fitting

BAILING LINE — The wire rope which operates the bailer for removing water and drill cuttings in drilling a well

BARNEY CAR — A relatively small car permanently attached to a haulage rope for pushing cars along a haulage system

BASKET OF SOCKET — The conical portion of a socket into which a splayed rope end is inserted and secured with zinc

BECKET LOOP — A loop of small rope or strand fastened to the end of a large wire rop to facilitate installation

BENDING STRESS — Stress imposed on wires of a wire rope by bending

BOOM LINE — A wire for supporting or operating the boom or derricks, cranes, drag lines, shovels, etc.

BREAKING STRENGTH (wire rope) — The measured load required to break a wire rope in tension

BREAKING STRENGTH (aggregate wire) — The sum of the breaking strength in tension of all the wires of a wire rope when the wires are tested individually

BRIDGE CABLE — The all-metallic wire ropes or strands used as the catenary and suspenders on a suspension bridge

BRIDGE SOCKET — Steel castings with baskets for securing rope ends and equipped with adjustable bolts. Closed type has "U-bolt." Open type has two eyebolts and pin

BRIDLE SLING — A two-part wire rope sling attached to a single part line. The legs of the sling are spread to divide and equalize the load

BRIGHT ROPE — Wire rope made of wires that are not coated with zinc, tin, or any other protective metal

BUTTON CONVEYOR ROPE — Wire ropes to which buttons or discs are attached at regular intervals to move material in a trough

BRONZE ROPES — Wire rope made of bronze wires

CABLE — A term loosely applied to wire ropes, wire strands, and electrical conductors

CABLE-LAID WIRE ROPE — A type of wire rope consisting of several wire ropes laid into a single wire rope

CABLE TOOL DRILLING LINE — The wire rope used to operate the cutting tools in drilling by the "cable tool" method

CABLEWAY — Aerial conveying system for transporting single loads along a suspended track cable

CASING LINE — Wire rope used to install the casing in an oil well

CENTERS — Wire, strand or fiber in the center of a strand about which the wires are laid

CHOKER — Short wire rope sling used to form a slip noose around the object to be moved or lifted

CLEVIS — A "U" shaped fitting with pin

CLIP — Fitting for clamping two parts of wire rope

CLOSED SOCKET — Wire rope and fitting consisting of basket and bail made integral

CLOSING LINE — Wire rope that closed a clamshell or orange peel bucket and then operates as a hoisting rope

COARSE LAID ROPE — Term used in oil fields to designate wire rope

COME-ALONG — Device for making a temporary grip on a wire rope

COMMON STRAND — Galvanized strand made of galvanized iron wire whose grade is common iron

CONICAL DRUM — Grooved hoisting drum of tapering diameter

CONSTRUCTION — Design of wire rope including number of strands, number of wires per strand and arrangement of wires in each strand

CONTINUOUS BEND — Receiving of wire rope over sheaves and drums so that it bends in the same direction, as opposed to reverse bend

CONVEYOR ROPE — Parallel endless wire ropes used to carry material

CORE — Member of a wire rope about which the strands are laid. It may be fiber, a wire strand or an independent wire rope

CORING LINE — Wire rope used to operate the coring tool for taking core samples during the drilling of a well

CORD — Term applied to small sizes of wire ropes

CORROSION — Chemical decomposition of the wires of a rope by exposure to moisture, acids, alkalines or other destructive agents

Glossary

CORRUGATED — Term used to describe the grooves of a sheave or drum when worn so as to show the impression of a wire rope

COVER WIRES — Outer layer of wires

CRACKER — Manila rope spliced to the end of a wire rope drilling line

CRITICAL DIAMETER — Diameter of the smallest bend for a given wire rope which permits the wires and strands to adjust themselves by relative movement while remaining in their normal position

CROWD ROPE — A wire rope used to force the bucket of a power shovel into the material handled

CYLINDRICAL DRUM — Hoisting drum of uniform diameter

DEAD LINE — An endless wire rope used in drilling for suspending the casing block from the crown block

DECELERATION STRESS — Additional stress imposed on a wire rope due to decreasing the velocity of the load

DEFLECTION — (a) Sag of a rope in a span. Usually measured at mid-span as the depth from the chord joining the tops of the two supports
(b) Any deviation from a straight line

DIAMETER — Distance measured across the center of a circle circumscribing the wires of a strand or the strands of a wire rope

DOG-LEG — Permanent short bend or kink in a wire rope caused by improper use

DRAGLINE — Wire rope used to pull an excavating or drag bucket

DRILLING LINE — See "Cable Tool Drilling Line" and "Rotary Drilling Line"

DRUM — A cylindrical flanged barrel of uniform or tapering diameter on which rope is wound for operation or storage. It may be smooth or grooved

EFFICIENCY (wire rope) — Percentage ratio of measured breaking strength of a wire rope to the aggregate strength of all individual wires tested separately

ELASTIC LIMIT — Limit of stress above which a permanent deformation takes place within the material

ENDLESS ROPE — Rope whose two ends are spliced together

EQUALIZING THIMBLES — Special type of fitting used as a component part of some wire rope slings

EXTRA HIGH STRENGTH STRAND — A grade of galvanized or bright strand

EYE OR EYE SPLICE — A loop with or without a thimble formed in the end of a wire rope

FACTOR OF SAFETY — Ratio of breaking strength of a wire rope to total rope stress

FATIGUE — Term commonly applied to progressive fracture of wires of a rope

FIBER CENTERS — Cords of rope made of vegetable fiber or synthetic fiber used in the center of a strand

FIBER CORES — Cords or rope made of vegetable fiber or synthetic fiber used in the core of a wire rope

FILLER WIRE — Small auxiliary wires in a strand for spacing and positioning other wires

FITTING — Any accessory used as an attachment for wire rope

FLAG — Marker on a rope to designate position of load

FLAT ROPE — Wire rope made of parallel alternating right lay and left lay ropes sewn together by relatively soft wires

FLATTENED STRAND ROPE — A wire rope with triangular shaped strands which presents a flattened rope surface

FLEET ANGLE — Angle between position of a rope at the extreme end wrap on a drum, and a line drawn perpendicular to the axis of the drum through the center of the nearest fixed sheave

GALVANIZE — To coat with zinc to protect against corrosion

GALVANIZED ROPE — Rope made of galvanized wire

GALVANIZED STRAND — Strand made of galvanized wire

GALVANIZED WIRE — Wire coated with zinc

GRADES, ROPE — Classification of strand by its breaking strength. In order of increasing breaking strengths they are Iron Traction, Mild Plow Steel, Plow Steel, Improved Plow Steel, Extra Improved Plow Steel

GRADES, STRAND — Classification of strand by its breaking strength. In order of increasing breaking strengths they are Common, Siemens Martin, High Strength and Extra-high Strength. A Utilities grade strand is also made to meet special requirement

GRAIN SHOVEL ROPE — 6x19 martine clad rope used for handling grain in scoops

GROMMET — An endless 7-strand wire rope made from one continuous length of strand

GROOVED DRUM — Drum with grooved surface to accommodate and guide the rope

GROOVES — Depressions in the periphery of a sheave or drum for positioning and supporting a rope

GUARD RAIL CABLE — A galvanized wire rope or strand erected along a highway

GUY LINE — Strand or rope, usually galvanized, for holding structure in position

Glossary

HAULAGE ROPE — Wire rope used for pulling cars on a track

HAWSER — Wire rope, usually galvanized, used for towing or mooring vessels

HIGH STRENGTH STRAND — Grade of galvanized or bright strand

HOLDING LINE — Wire rope on a clamshell or orange peel bucket that holds the [illegible] closing line is released to dump the load

IDLER — Sheave or roller used to guide or support a rope

IMPROVED PLOW STEEL ROPE (trade marked by most manufacturers) — See "Grades, Rope"

INCLINE ROPES — Ropes to operate cars on an incline haulage

INDEPENDENT WIRE ROPE CORE — Wire rope used as the core of a larger rope

INNER WIRES — All wires of a strand except surface or cover wires

INTERNALLY LUBRICATED — Wire rope or strand having all wires coated with lubricant

IRON ROPE — See "Grades, Rope"

IWRC — "Independent Wire Rope Core"

KINK — Sharp bend in a wire rope that permanently distorts the wires and strands

LAGGING — External wood covering on a reel of rope or strand

LANG LAY ROPE — Wire rope in which the wires in the strands in the rope are laid in the same direction

LAY — Manner in which wires are helically laid into strands or strands into rope

LEAD LINE — That part of a rope tackle leading from the first or fast sheave to the drum

LEFT LAY — (a) Strand — Strand in which the cover wires are laid in a helix having a left-hand pitch
— (b) Rope — Rope in which the strands are laid in a helix having a left-hand pitch

LINE — Synonymous with "wire rope"

LOCKED COIL STRAND — Smooth surfaced strand composed of shaped wires laid in concentric layers around a center of round wires

MARLINE CLAD ROPE — Rope with individual strands spirally wrapped with marline

MARLINE SPIKE — Tapered steel pin used in splicing wire rope

MESSENGER STRAND — Galvanized strand or bronze strand used to support telephone and electric cables

MILD PLOW — See "Grades, Rope"

MODULUS OF ELASTICITY — Mathematical quantity giving the ratio, within the elastic limit, between a definite range of unit stress on a wire rope, to the corresponding elongation

MOORING LINES — Galvanized wire rope, usually 6x12, 6x24 or spring lay construction, for holding ships to dock

NON-ROTATING WIRE ROPE — 18x7 wire rope consisting of a 6x7 left lay Lang lay inner rope covered by twelve 7-wire strands right lay regular lay

OPEN SOCKET — Wire rope fitting consisting of a "basket" and two "ears" with a pin

PEENING — Permanent distortion of outside wire in a rope caused by pounding

PLOW STEEL — See "Grades, Rope"

PREECE TEST — A recognized standard of testing the galvanized coating on wire

PREFORMED WIRE ROPE — Wire rope in which the strands are permanently shaped, before fabrication into the rope, to the helical form they assume in the wire rope

PREFORMED STRAND — Strand in which the wires are permanently shaped, before fabrication in the strands, to the helical form they assume in the strand

PRESTRETCHING — Stressing a wire rope or strand before use under such a tension and for such a time that the constructional stretch is largely removed

PROPORTIONAL LIMIT — Consideration synonymous with Limit"

REEL — The flanged spool on which wire rope or strand is wound for storage or shipment

REGULAR LAY ROPE — Wire rope in which the wires in the strands and the strands in the rope are laid in opposite directions

RESERVE STRENGTH — Strength represented by the inner wires of a wire rope

REVERSE BEND — Reeving of a wire rope over sheaves and drums so that it bends in opposite directions

RIGHT LAY — Synonymous with "Alternate Lay"

RIGHT LAY — (a) Strand — Strand in which the cover wires are laid in a helix having a right-hand pitch, similar to a right-hand screw

(b) Rope — Rope in which the strands are laid in a helix having a right-hand pitch, similar to a right-hand screw

ROLLERS — Relatively small diameter cylinders which are free to turn while supporting ropes

ROTARY LINES — The wire rope on a rotary drilling rig which raises and lowers the traveling block

RUNNING ROPE — Term used in describing 6x12 galvanized rope

Glossary

SAFE WORKING LOAD—Proper load which the rope may carry economically and safely

SAND LINE—The wire rope which operates the bailer for removing water and drill cuttings in drilling a well

SASH CORD—Term applied to small 6x7 wire ropes commonly made of iron, bronze or copper wires

SEALE—A strand construction having one size of cover wires with the same number of one size of wires in the inner layer and each layer having the same length and direction of lay

SEIZE—To bind securely the end of a wire rope or strand with seizing wire or strand

SEIZING STRAND—Small strand usually of 7 wires made of soft annealed iron wire

SEIZING WIRE—A soft annealed iron wire

SERVE—To cover the surface of a wire rope or strand with a wrapping of fiber cord

SEWING WIRES—See "Flat Rope"

SHACKLE—A "U" shaped fitting with pin

SHEAVE—A grooved pulley for use with rope

SIEMENS-MARTIN STRAND—A grade of galvanized strand

SINGLE GALVANIZED STRAND—Strand made in the "common grade" of wiper galvanized wire. See "Common Strand"

SLINGS—Wire ropes made into forms, with or without fittings, for handling loads and so made as to permit the attachment of an operating rope

SLINGS, BRAIDED—A very flexible sling composed of several individual wire ropes braided into a single sling

SMOOTH COIL STRAND—Strand composed entirely of round wires, used as an aerial conveyor track cable

SMOOTH-FACED DRUM—Drum with a plain face, not grooved

SOCKET—Type of wire rope fitting. See "Bridge Sockets," "Closed Sockets," "Open Sockets" and "Wedge Sockets"

SPIRAL GROOVE—Groove which follows the path of a helix around the drum, as the thread of a screw

SPLICING—Interweaving of two ends of ropes so as to make a continuous or endless length without appreciably increasing the diameter. Also making a loop or eye in the end of a rope by tucking the ends of the strands

SPRING LAY ROPE—Preformed cable laid rope consisting of six ropes around a fiber core. Each individual rope consisting of three galvanized, steel strands and three fiber cords laid alternately around a fiber core

STAINLESS STEEL ROPE—Wire rope made of chrome-nickel steel wires having great resistance to corrosion

STEEL CLAD ROPE—Rope with individual strands spirally wrapped with flat steel wire

STIRRUP—The U-bolt or eyebolt attachment on a bridge socket

STONE SAWING STRAND—Usually a 3-wire strand used in quarrying stone or slate

STRAND—An arrangement of wires helically laid about an axis or another wire or fiber center to produce a symmetrical section

SWAGED FITTINGS—Fittings in which wire rope is inserted and attached by cold flowing method

TAG LINE—A small wire rope used to prevent rotation of a load

TAPERED DRUM—Grooved hoisting drum of tapering diameter

TAPERING & WELDING—Reducing the diameter of the end of a wire rope and welding it to facilitate reeving

THIMBLE—Grooved metal fitting to protect the eye of a wire rope

TILLER ROPE—A very flexible operating rope, commonly made by cable laying six 6x7 ropes around a fiber core

TINNED WIRE—Wire coated with tin

TRACK CABLE—The suspended wire rope or strand along the carriers move on an aerial conveyor

TRACTION ROPE—Wire rope that propels the carriages on an aerial conveyor

TRACTION STEEL—A grade of wire rope used in elevator service See "Grades, Rope"

TRAMWAY—Aerial conveying system for transporting multiple loads

TURNBUCKLE—Device attached to wire rope for making limited adjustments in length. It consists of a barrel and right and left hand threaded bolts

WARRINGTON—A strand construction in which one layer of wires, usually the outer, is composed of alternating large and small wires

WEDGE SOCKET—Wire rope fitting in which the rope is secured by a wedge

WIRE (round)—Single continuous length of metal cold drawn from a rod

WIRE (shaped)—A single continuous length of metal either cold drawn or cold rolled from a rod

WIRE ROPE—A plurality of strands laid helically around an axis or a core

WIRE ROPE DISCUSSION GUIDE

REFERENCE OSHA STANDARD 1910.179

PREPARED
JULY, 1983

Wire Rope Discussion Guide

CHARACTERISTICS

Length: Your wire rope length requirement will be determined by how and where it is used in your operation, and length should be specified when you order. It is frequently more economical to order a longer length than actually needed. Cutting off a short length at intervals during equipment servicing varies the rope relationship to drums and sheaves, and distributes wear more evenly. This procedure, however, can be followed only where excess rope can be stored inside the drum or on the dead end — as practiced on rotary drilling rigs, mineshaft hoists, etc.

Where any excess cannot be handled, exact rope length should be ordered to avoid rope deterioration by overwinding on the drum. Ideally the length of rope should be such that it winds in only one layer on the drum.

Diameter: Wire rope diameter is the diameter of a circle enclosing it. Here you see the proper method for determining true rope diameter.

The strength of wire rope is determined by its size, grade and construction. In most cases, since your equipment requires a specific diameter rope, you will have no leeway in selection.

HOW TO MEASURE

Wire rope is usually fabricated slightly larger than its nominal diameter. True diameter of a new rope may exceed nominal diameter by the amount determined in the United States Federal Specification for Wire Rope.

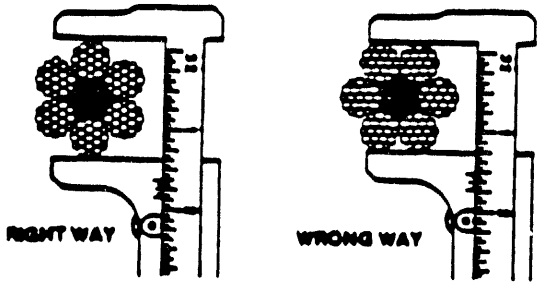

DIAMETER TOLERANCES

It is most important that sheave and drum grooves be of correct dimension to properly seat the rope. Too tight grooves mean excess wear and rapid rope deterioration through fatigue caused by binding.

Grooves should be checked regularly. Where worn, sheaves should be regrooved or replaced. This is especially necessary when rigging new rope in old equipment. New rope will almost certainly be larger in actual diameter than the worn rope it replaces; groove bottoms may have become worn to the old rope diameter.

TO PROPERLY ACCOMMODATE A NEW WIRE ROPE, SHEAVE AND DRUM TOLERANCES SHOULD CONFORM TO THE TABLE SHOWN HERE.

(These tolerances do not apply to traction elevators.)

NOMINAL DIAMETER IN INCHES	UNDERSIZE INCHES	OVERSIZE INCHES
0 to 3/4	0	1/32
1-3/16 to 1-1/8	0	3/64
1-3/16 to 1-1/2	0	1/16
1-9/16 to 2-1/4	0	3/32
2-5/16 and larger	0	1/8

WIRE ROPE CERTIFICATIONS

A sample length of wire rope is taken from every manufacturing lot, tested for breaking strength, flexibility and preforming. Certification on all wire ropes that are used on the job site should be available.

WIRE ROPE APPROVALS

American Federal Specification (F.S.)
American Petroleum Institute (A.P.I.)
American Society for Testing Materials (A.S.T.M.)
American Bureau of Shipping (A.B.S.)
Japanese Industrial Standard (J.I.S.)
British Standard Specification (B.S.S.)
Deutsche Industries Normen (D.I.N.)
Bureau Veritas of Shipping (B.V. Rule)
Lloyd's Register of Shipping (Lloyd's Rule)

WIRE ROPE LAYS

Wire rope consists of a number of strands laid helically around a supporting core. Individual strands are composed of a number of wires laid helically around a center (core) of wire or fiber. The lay of a wire rope is defined by the direction in which the strands are laid into the rope, and also be the direction in which the wires are laid into the strands.

Anchor furnishes "right-lay — regular lay" unless otherwise specified.

REGULAR LAY ROPE

One in which strand lay direction in the rope is opposite to the wire lay direction in the strands. Regular lay is preferred where additional resistance to crushing, rotating or distortion is required.

LANG LAY ROPE

One where the strand lay in the rope is the same as wire lay direction in the strands. Lang lay ropes deliver maximum flexibility and resistance to bending fatigue and abrasion.

Wire Rope Discussion Guide

RIGHT LAY ROPE
One where the path of the strands in the rope is left to right as shown. A right lay rope may be either regular or lang lay.

LEFT LAY ROPE
In left lay, the path of the strands runs right to left as shown. Left lay rope may be either regular lay or lang lay.

WIRE ROPE CORES

At the center of every wire rope is a core, usually made from either wire or fiber. The core acts as foundation for the strands, keeps the rope round, and provides clearance between the rope strands for unrestricted movement.

Ropes with fiber cores have greater elasticity, but metallic cores afford greater strength and resistance to crushing.

On job sites, you will find the following different kinds of wire rope cores — Independent Wire Rope Core (IWRC), wire strand, manila fiber, sisal fiber or polypropylene. Under normal operating conditions a fiber core provides fully adequate support for the strands, and acts as a reservoir for the lubricant.

Wire cores are usually composed of a separate 7 x 7 wire rope, termed Independent Wire Rope Core (IWRC). In any case where heavy loads or overwinding on a drum will cause excessive pressure of strands against core, the IWRC is a necessity.

For cable tool drilling the polypropylene core provides excellent resistance to the corrosive fluids encountered in these applications.

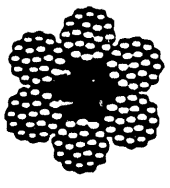

Wire rope with fiber core

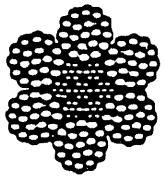

Wire rope with independent wire rope core

WIRE ROPE FINISHES

Wire Ropes are supplied in natural bright finish unless otherwise specified.

Also available is wire rope with galvanized finish — valuable to protect against corrosive conditions in various types of service.

Stainless steel is also available and recommended when even more protection against corrosion is needed than afforded by galvanized.

WIRE ROPE LUBRICATION

As wire rope bends around a sheave, the individual wires and strands adjust to the curvature of the rope. Proper rope lubrication permits unrestricted adjustment, with resultant minimizing of fatigue and frictional wear.

To provide the lubrication necessary for proper rope function, Anchor incorporates petroleum lubricants in each wire during the stranding. Some types of finished rope are slushed.

Fiber rope cores are impregnated with lubricant to preserve the fibers and keep them pliable.

For maximum rope life the rope lubrication applied during manufacture should be supplemented by periodic lubrication during service. Ropes which remain idle or are stored between operations should be thoroughly lubricated before each idle period.

SAFETY FACTORS

Wire rope must have sufficient strength to carry its required load with an adequate safety factor to assure safe operation throughout the life of the rope. The safety factor should be sufficiently high initially to permit its becoming worn out through normal fatigue and abrasion, without becoming unsafe.

This safety factor is a value factor too. Ropes operating under low safety factors deteriorate much more rapidly due to accelerated rope fatigue.

USE OF ROPE	MAXIMUM FACTOR OF SAFETY
Static Ropes and Strands for guying	3
Main ropes for small suspension bridges	3
Suspender ropes for small suspension bridges	3½
Aerial track cables for material movement	3½
Each operating rope on a clamshell bucket	4
Haulage rope on a horizontal system of haulage	4
Mine hoists, vertical or slope	6
Industrial hoists, stationary and moveable cranes, building material hoists, cranes, etc.	6
Elevators (depending on class of service and speed of operation)	6 to 12
Hot ladle cranes	10

The wire rope safety factor is calculated by dividing the applied load into the rated breaking strength of the rope. (Applied load includes dead load, load caused by dead load acceleration and load created through friction.)

RECOMMENDED SHEAVE AND DRUM DIAMETERS

Recommended Sheave & Drum Diameter
(Tread Diameter) Factors
(Rope Diameter x Factor = Sheave or Drum Diameter)

CONSTRUCTION	RECOMMENDED FACTOR	*MINIMUM FACTOR
6 x 7	72	42
18/19 x 7	51	34
6 x 19 S	45	33
6 x 21 FW	40	30
6 x 19 2-OP.	40	30
6 x 25 FW	35	26
6 x 37	27	18

*If the ratio of sheave or drum diameter to rope diameter falls below this minimum value, bending service declines rapidly. The use of sheaves or drums with diameters smaller than this minimum may result in uneconomical and unsafe operation.

Wire Rope Discussion Guide

WIRE ROPE CONSTRUCTION RELATED TO APPLICATION

Practically all wire ropes in service are subject to abrasion and bending in varying proportions. The ideal rope selection is one where resistance to abrasion and rope fatigue are built in, in approximately the same proportions as abrasion and bending occur in the use of the rope.

Such selection requires careful analysis of operating conditions and rope construction to best match operating problem with the proper rope solution.

Resistance of Various Constructions to Abrasions and Bending Fatigue
(Based on Critical Outer Wire Size)

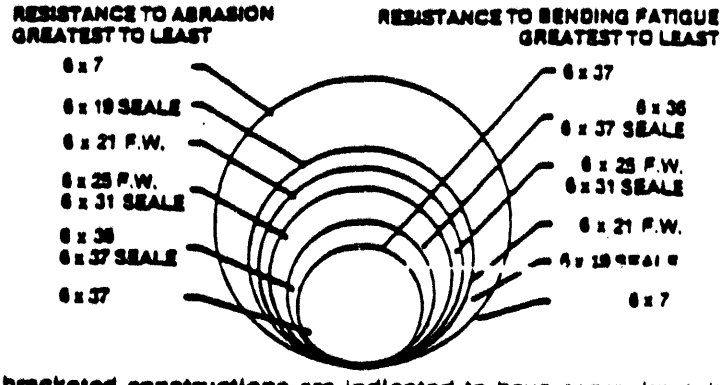

Where bracketed constructions are indicated to have approximately equal resistance to abrasion or fatigue, other rope qualities such as flexibility and resistance to crushing and distortion may influence the selection of the rope.

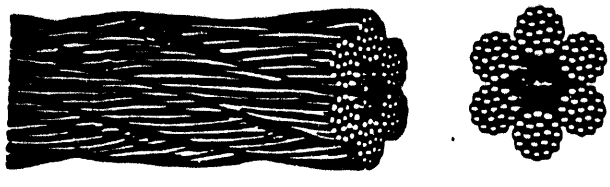

6 x 19

Preformed—Improved Plow Steel—6 x 19 Class

Diameter Inches	FIBRE CORE Weight Lbs./Ft.	FIBRE CORE Breaking Strength (Lbs.)	IWRC Weight Lbs./Ft.	IWRC Breaking Strength (Lbs.)
1/4	.105	5,480	0.12	5,880
5/16	.164	8,520	0.18	9,160
3/8	.236	12,200	0.26	13,120
7/16	.32	16,540	0.35	17,780
1/2	.42	21,400	0.46	23,000
9/16	.53	27,000	0.59	29,000
5/8	.66	33,400	0.72	35,800
3/4	.95	47,600	1.04	51,200
7/8	1.29	64,400	1.42	69,200
1	1.68	83,600	1.85	89,800
1-1/8	2.13	105,200	2.34	113,000
1-1/4	2.63	129,200	2.89	138,800
1-3/8	3.18	155,400	3.50	167,000
1-1/2	3.78	184,000	4.16	197,800
1-5/8	4.44	214,000	4.88	230,000
1-3/4	5.15	248,000	5.67	266,000
1-7/8	5.91	282,000	6.50	304,000
2	6.72	320,000	7.39	344,000
2-1/8	7.59	358,000	8.35	384,000
2-1/4	8.51	400,000	9.36	430,000
2-1/2	10.50	488,000	11.60	524,000

Note: Galvanized wire ropes have a 10% lower breaking strength. Weights as above.

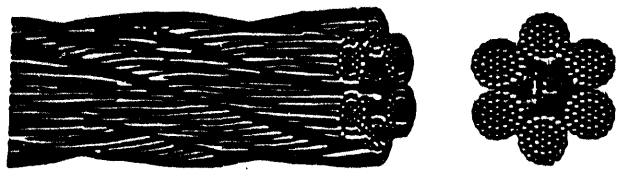

6 x 37

Preformed—Improved Plow Steel—6 x 37 Class

Diameter Inches	FIBRE CORE Weight Lbs./Ft.	FIBRE CORE Breaking Strength (Lbs.)	IWRC Weight Lbs./Ft.	IWRC Breaking Strength (Lbs.)
1/4	.105	5,180	0.12	5,560
5/16	.164	8,060	0.18	8,660
3/8	.236	11,590	0.26	12,400
7/16	.32	15,640	0.35	16,820
1/2	.42	20,400	0.46	22,000
9/16	.53	25,800	0.59	27,800
5/8	.66	31,600	0.72	34,000
3/4	.95	45,200	1.04	48,600
7/8	1.29	61,200	1.42	65,800
1	1.68	79,600	1.85	85,600
1-1/8	2.13	100,200	2.34	107,800
1-1/4	2.63	123,000	2.89	132,200
1-3/8	3.18	148,200	3.50	159,400
1-1/2	3.78	175,800	4.16	189,000
1-5/8	4.44	206,000	4.88	222,000
1-3/4	5.15	238,000	5.67	256,000
1-7/8	5.91	272,000	6.50	292,000
2	6.72	308,000	7.39	330,000
2-1/8	7.59	346,000	8.35	372,000
2-1/4	8.51	386,000	9.36	414,000
2-1/2	10.50	472,000	11.60	508,000

Note: Galvanized wire ropes have a 10% lower breaking strength. Weights as above.

Wire Rope Discussion Guide

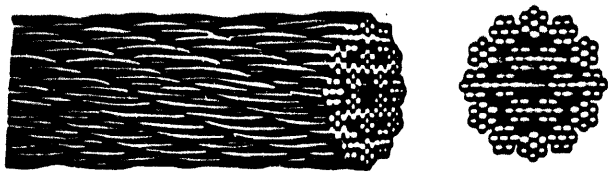

18 x 7

Preformed—Improved Plow Steel—18 x 7 Class Non-Rotating Ropes

FIBRE CORE

Diameter Inches	Weight Lbs./ Ft.	Breaking Strength (Lbs.)
3/8	.24	11,180
1/2	.43	19,700
9/16	.55	24,800
5/8	.68	30,600
3/4	.97	43,600
7/8	1.32	59,000
1	1.73	76,600
1-1/8	2.19	96,400
1-1/4	2.70	118,400
1-1/2	3.89	168,800

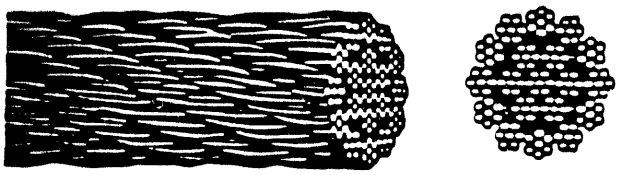

19 x 7

Preformed—Improved Plow Steel—19 x 7 Class Non-Rotating Ropes

WIRE STRAND CORE

Diameter Inches	Weight Lbs./ Ft.	Breaking Strength (Lbs.)
3/8	.25	11,180
1/2	.45	19,700
9/16	.58	24,800
5/8	.71	30,600
3/4	1.02	43,600
7/8	1.39	59,000
1	1.82	76,600
1-1/8	2.30	96,400
1-1/4	2.84	118,400
1-1/2	4.08	168,800

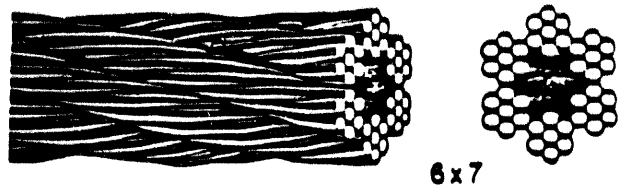

6 x 7

Preformed—Improved Plow Steel—6 x 7 Class

FIBRE CORE

Diameter Inches	Weight Lbs./Ft.	Breaking Strength (Lbs.)
1/4	.094	5,280
5/16	.15	8,200
3/8	.21	11,720
7/16	.29	15,860
1/2	.38	20,600
9/16	.48	26,000
5/8	.59	31,800
3/4	.84	45,400
7/8	1.15	61,400
1	1.50	79,400
1-1/8	1.90	99,600
1-1/4	2.34	122,000
1-3/8	2.84	146,200
1-1/2	3.38	172,400

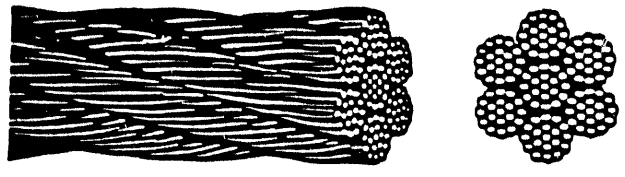

7 x 19

Preformed—Aircraft Cables and Strands—7 x 19 Class

Diameter Inches	GALVANIZED Lbs. per 1000 Ft.	GALVANIZED Breaking Strength (Lbs.)	STAINLESS Lbs. per 1000 Ft.	STAINLESS Breaking Strength (Lbs.)
3/32	16	1,050	16	1,050
1/8	29	2,000	29	1,900
5/32	45	2,800	45	2,600
3/16	65	4,200	65	3,900
7/32	86	5,600	86	5,000
1/4	110	7,000	110	6,600
5/16	173	9,800	173	9,600
3/8	243	14,400	243	13,000

Wire Rope Discussion Guide

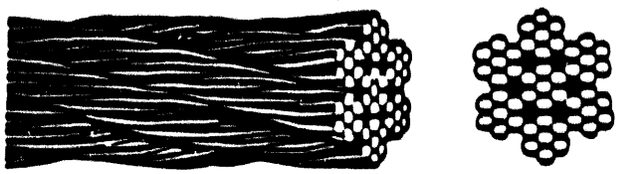

7 x 7

Preformed—Aircraft Cables and Strands—
7 x 7 Class

Diameter Inches	GALVANIZED Lbs. per 1000 Ft.	GALVANIZED Breaking Strength (Lbs.)	STAINLESS Lbs. per 1000 Ft.	STAINLESS Breaking Strength (Lbs.)
1/16	7.5	480	7.5	480
3/32	16	920	16	920
1/8	28.5	1,700	28.5	1,700
5/32	43	2,600	43	2,600
3/16	62	3,700	62	3,700
1/4	108	6,100	108	6,100
5/16	167	9,200	167	9,100
3/8	236	13,300	236	12,600

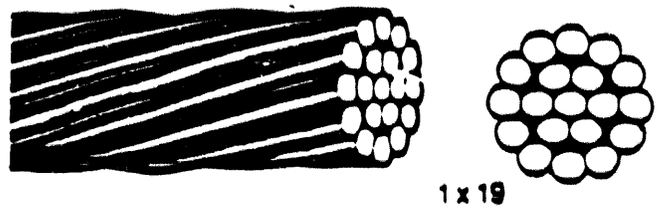

1 x 19

Preformed—Aircraft Cables and Strands
1 x 19 Class

Diameter Inches	GALVANIZED Lbs. per 1000 Ft.	GALVANIZED Breaking Strength (Lbs.)	STAINLESS Lbs. per 1000 Ft.	STAINLESS Breaking Strength (Lbs.)
1/16	8.5	500	8.5	500
3/32	20	1,200	20	1,200
1/8	35	2,100	35	2,100
5/32	55	3,300	55	3,300
3/16	77	4,700	77	4,700
1/4	135	8,200	135	8,200
5/16	210	12,500	210	12,500
3/8	300	18,000	300	17,500

Seale 37 Wire Strands

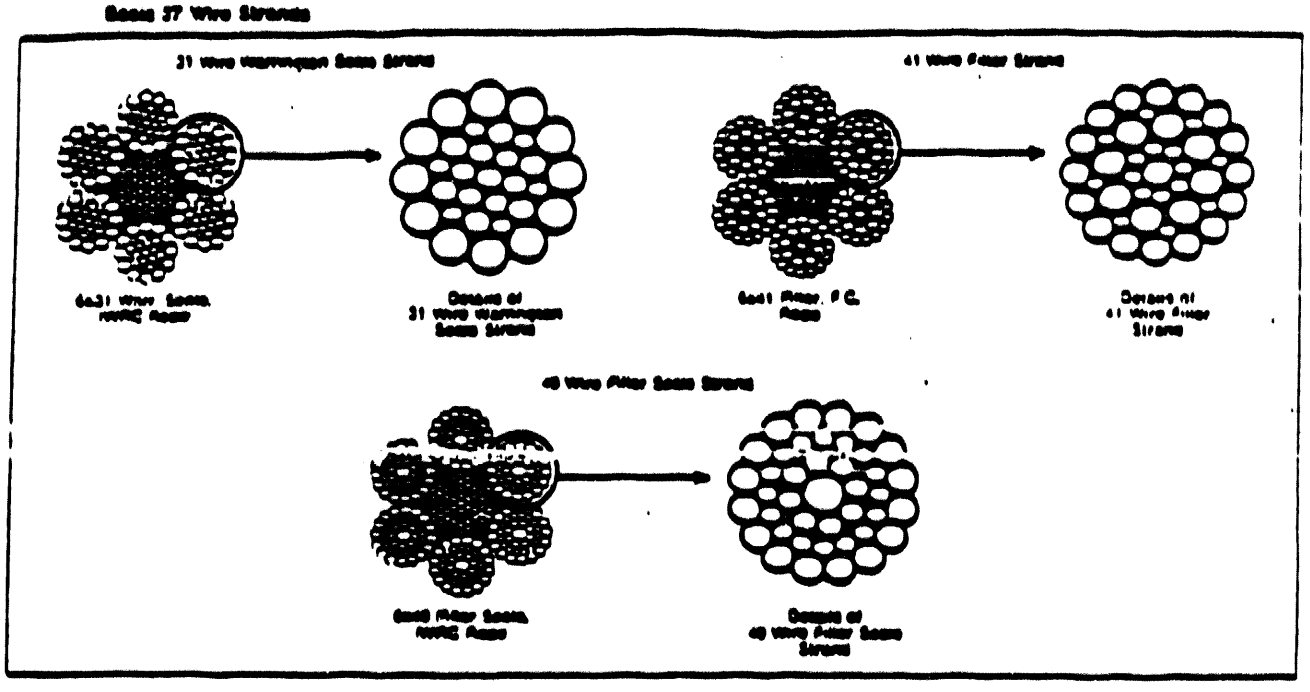

Measurement of Rope Lay Length

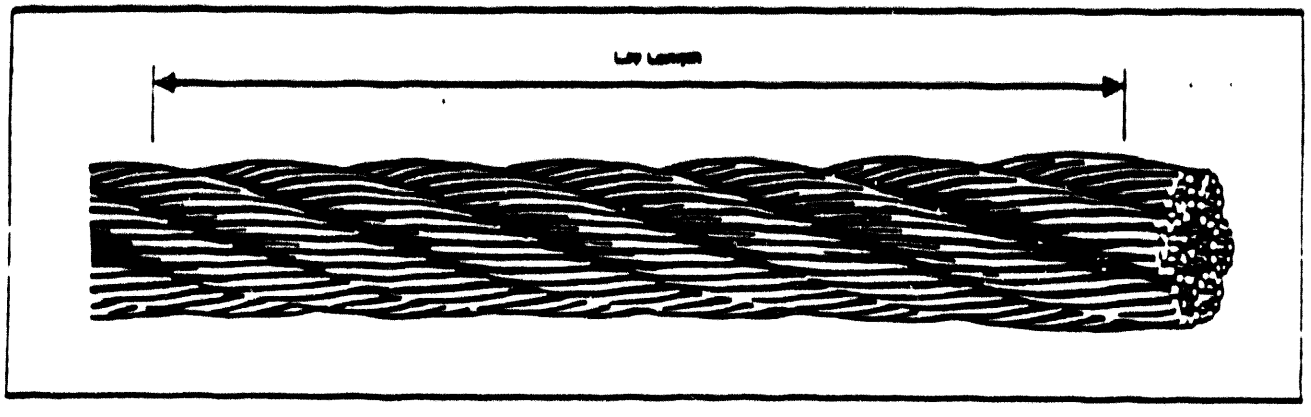

Regular Lay Rope — Wires and Strands Laid in Opposite Directions

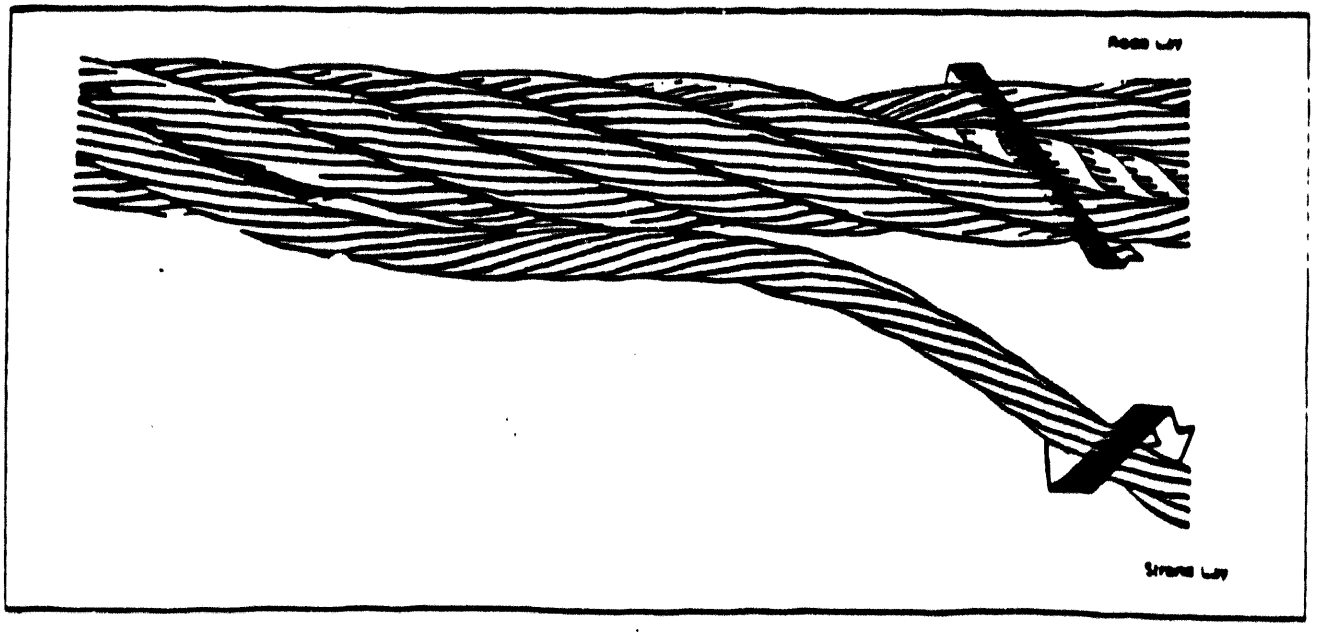

INSTALLATION OF CABLE CLIPS

Right and Wrong Ways of Using Cable Clips

Correct
U-Bolt of all clips
on dead end of
rope

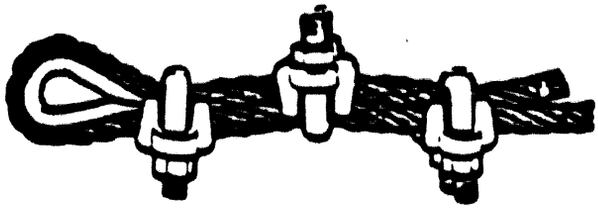

Incorrect
Do not stagger
clips

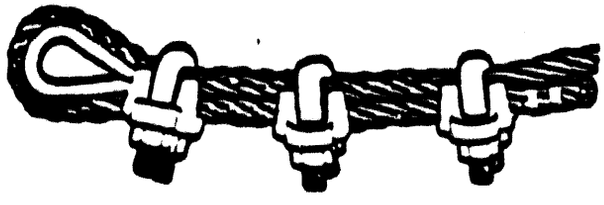

Incorrect
U-Bolt of all clips
on live end of
rope

Double Saddle Clips (Fist Grip Clips)

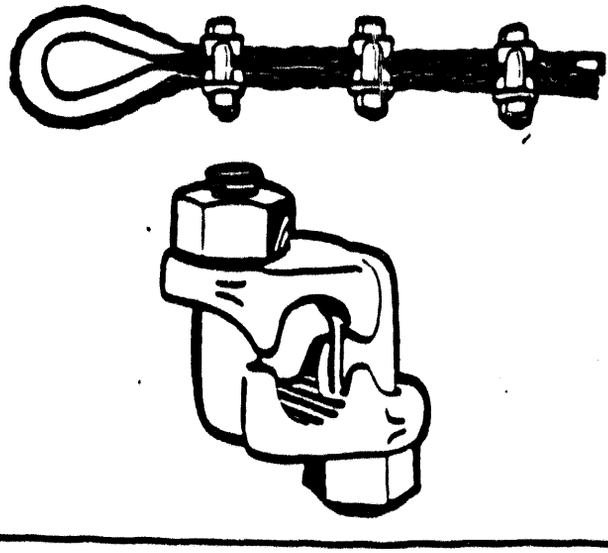

Proper Method of Installing Cable Clips

STEP 1

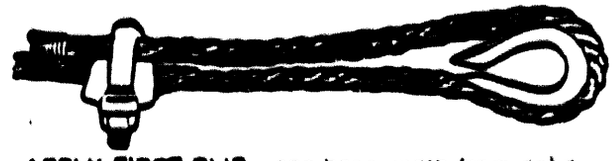

APPLY FIRST CLIP—one base width from dead end of wire rope—U-Bolt over dead end—live end rests in clip saddle. Tighten nuts evenly to recommended torque.

STEP 2

APPLY SECOND CLIP—nearest loop as possible—U-Bolt over dead end—turn on nuts firm but DO NOT TIGHTEN.

STEP 3

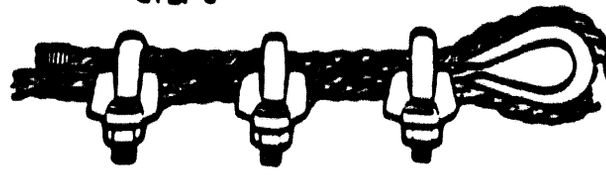

ALL OTHER CLIPS—Space equally between first two.

STEP 4

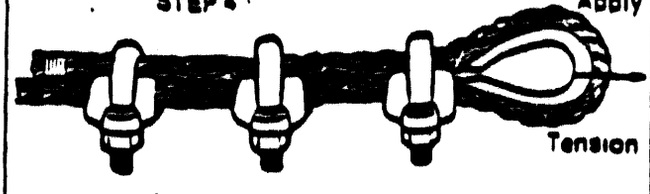

Apply tension and tighten all nuts to recommended torque.

STEP 5

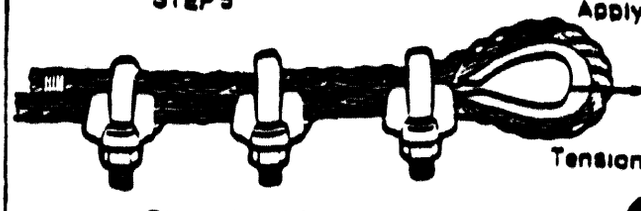

Recheck nut torque after rope has been in operation.

178(m)(12)
Elevatable
Platform

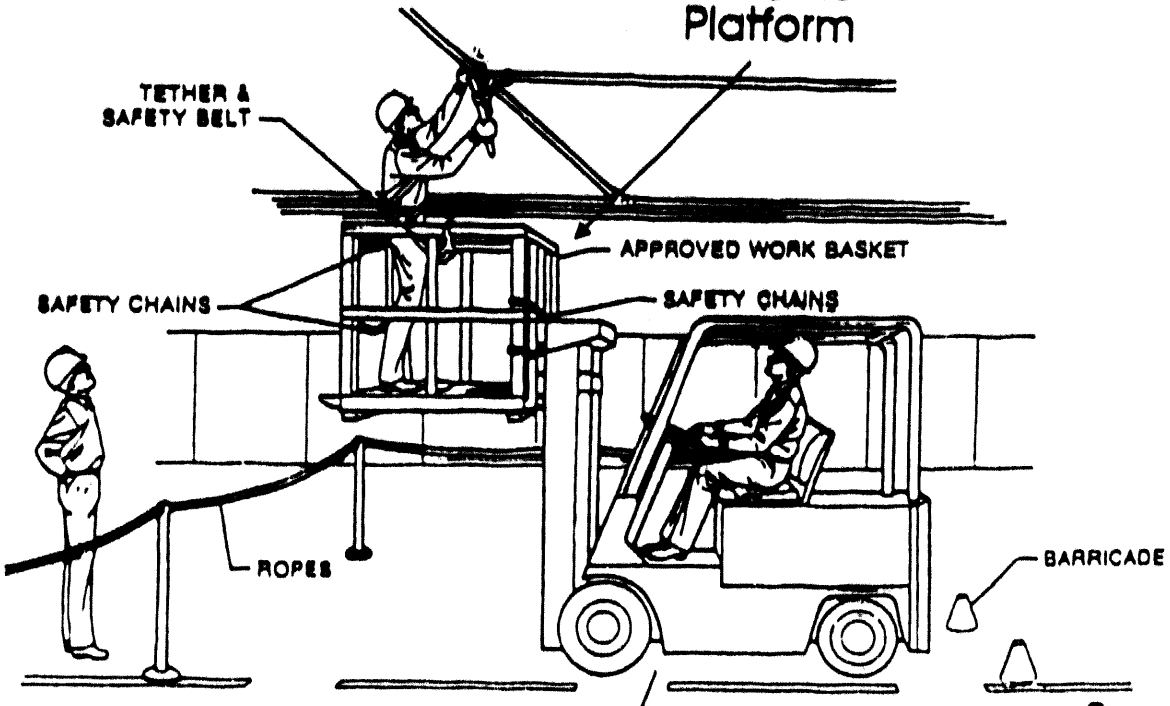

Sec. 5 (a)(1)

ANSI B-56.1

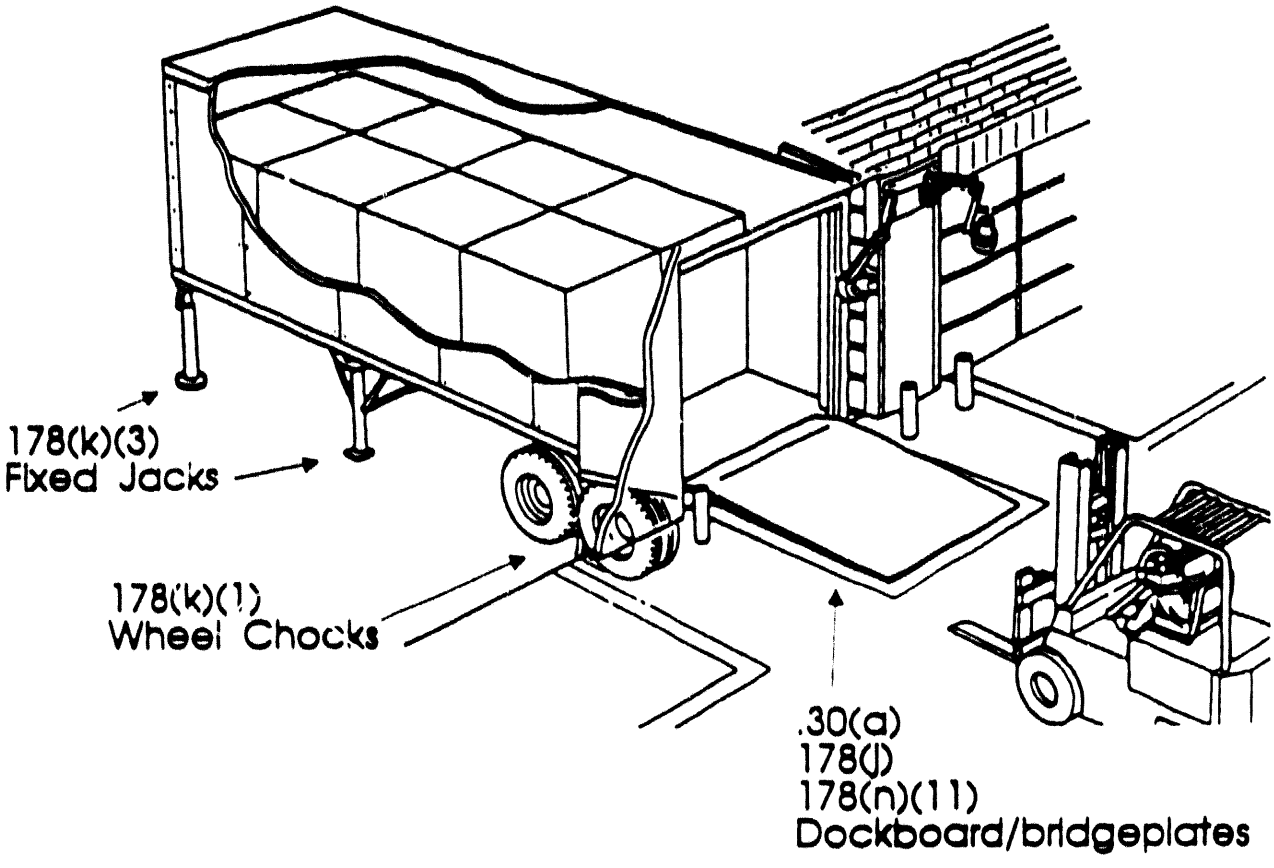
178(k)(3)
Fixed Jacks
178(k)(1)
Wheel Chocks
.30(a)
178(j)
178(n)(11)
Dockboard/bridgeplates

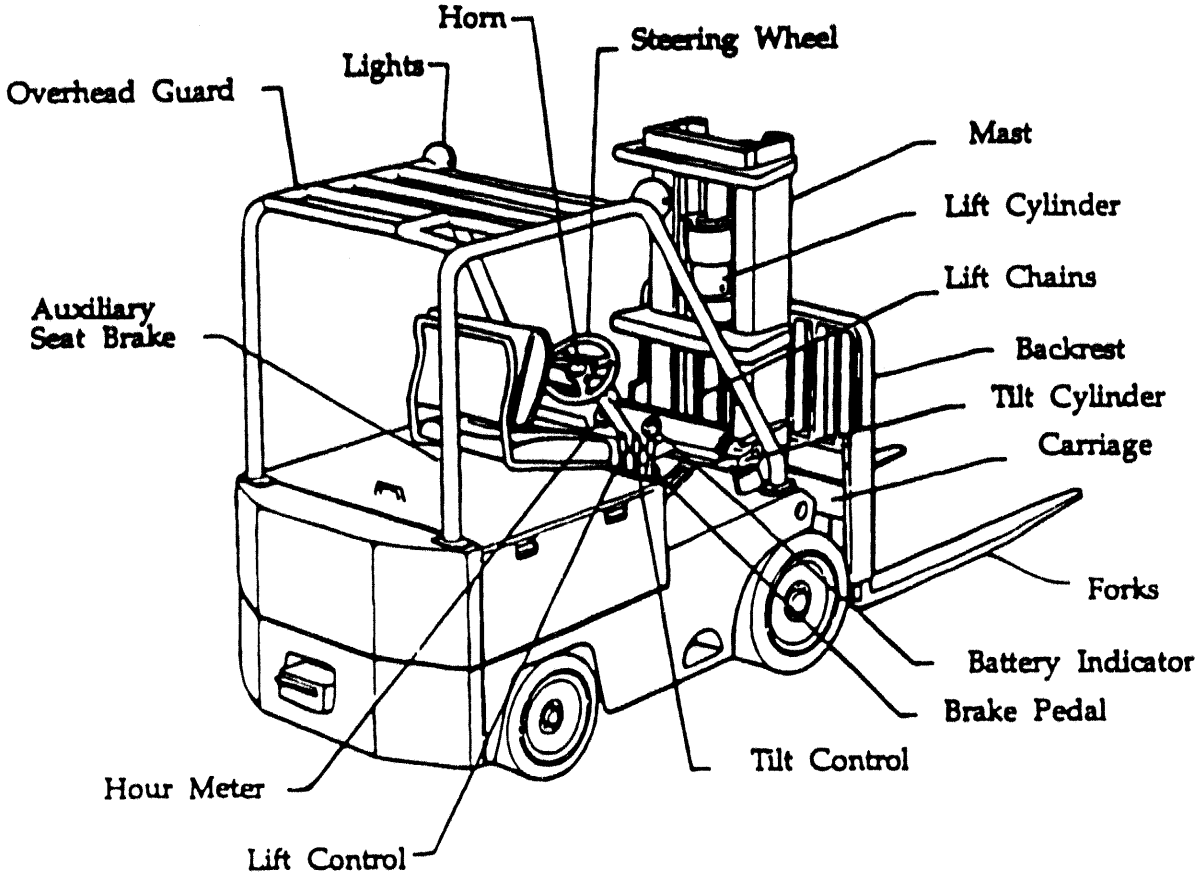
Horn
Steering Wheel
Lights
Overhead Guard
Mast
Lift Cylinder
Lift Chains
Auxiliary
Seat Brake
Backrest
Tilt Cylinder
Carriage
Forks
Battery Indicator
Brake Pedal
Tilt Control
Hour Meter
Lift Control

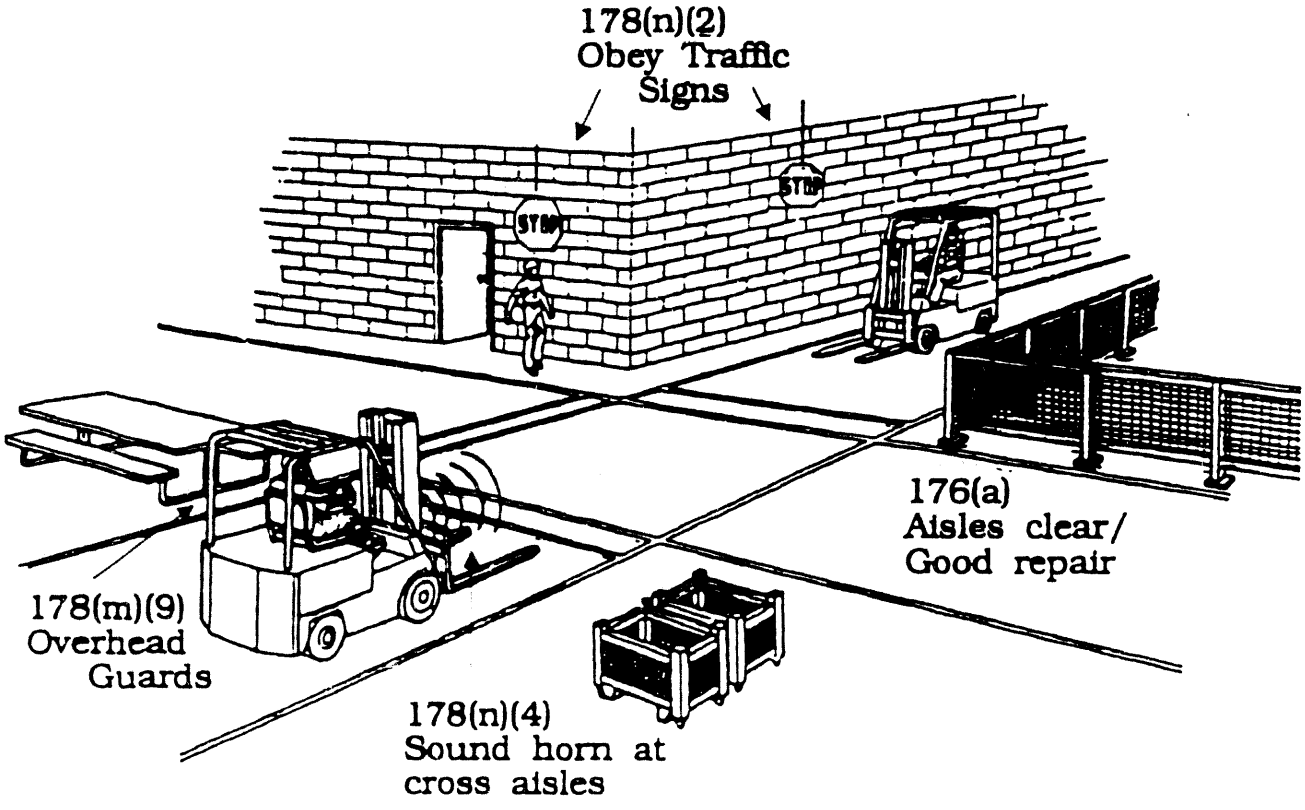
178(n)(2)
Obey Traffic
Signs
STOP
STOP
176(a)
Aisles clear/
Good repair
178(m)(9)
Overhead
Guards
178(n)(4)
Sound horn at
cross aisles

178(g)(1)

Designated Battery Charging Area

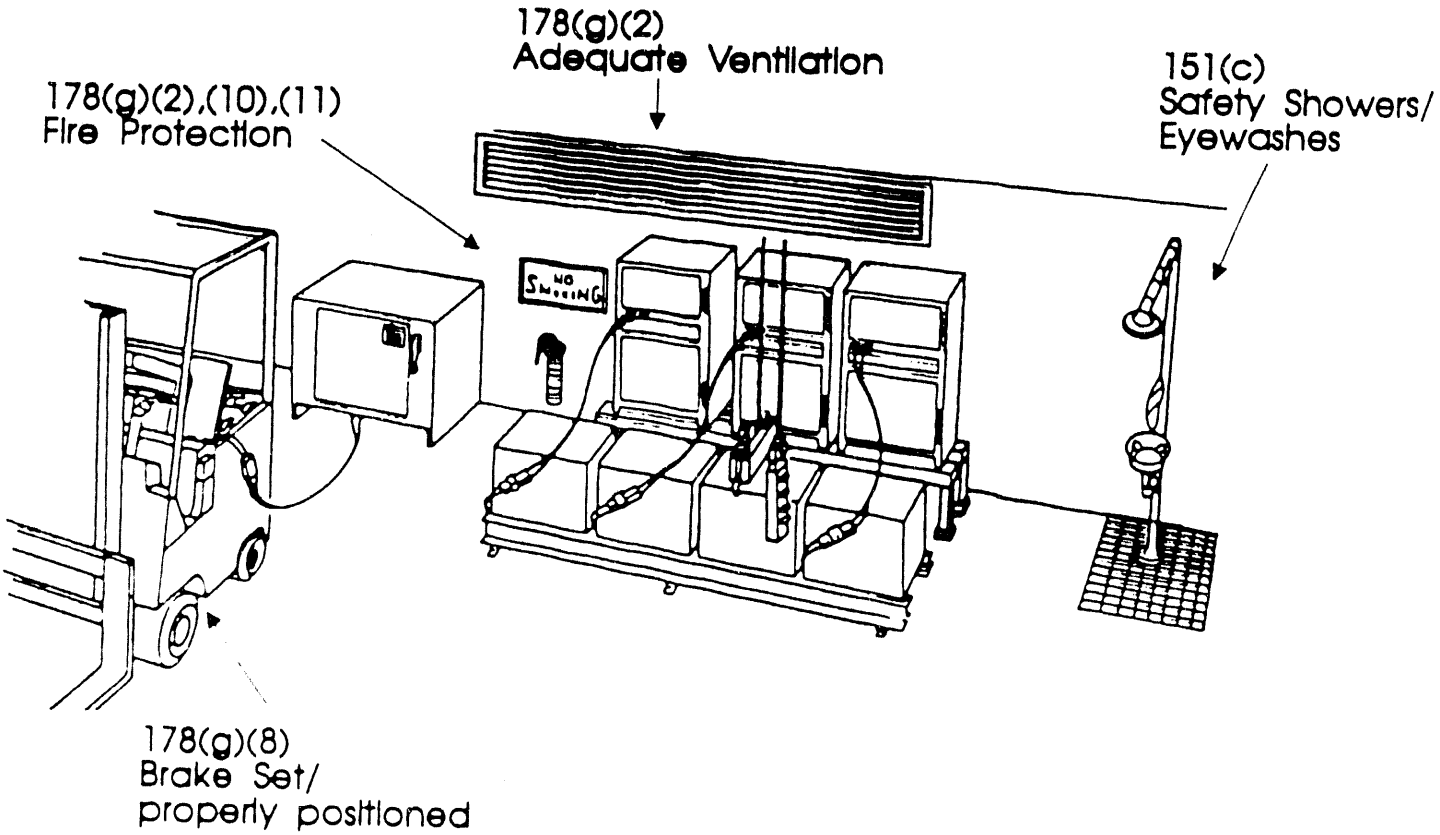

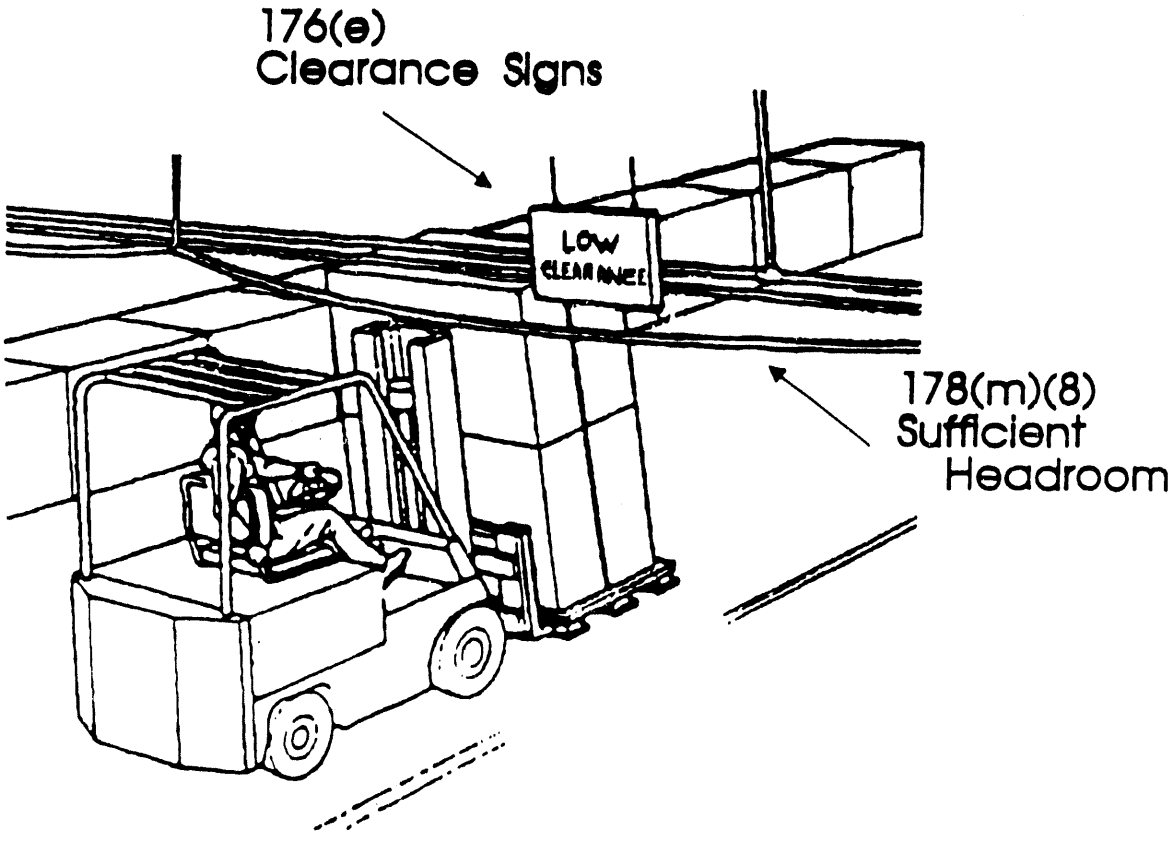

LOW CLEARANCE II

PENALTY SUMMARY

DRAFT

FOM CHAP VI-3

Severity Assessment. The classification of the alleged violations as serious or other-than-serious, in accordance with the instructions in Chapter IV of the FOM, is based on the severity of the injury or illness that could result from the violation. This classification constitutes the first step in determining the gravity of the violation. The most serious injury or illness which is reasonably predictable as a result of an employee's exposure to the safety or health hazard cited shall be assigned a severity assessment in accordance with the following factors:

a. High Severity: Death from injury or illness; injuries involving permanent disability; or chronic, irreversible illnesses.

b. Medium Severity: Injuries or temporary, reversible illnesses resulting in hospitalization or a variable but limited period of disability.

c. Low Severity: Injuries or temporary, reversible illnesses not resulting in hospitalization and requiring only minor supportive treatment.

d. Minimal Severity: Other-than-serious violations. Although such violations reflect conditions which have a direct and immediate relationship to the safety and health of employees, the injury or illness most likely to result would probably not cause death or serious physical harm.

FOM CHAP. VI-3

Probability Assessment. The probability that an injury or illness will result from a hazard has no role in determining the classification of a violation but does affect the amount of the penalty to be proposed.

FOM CHAP. VI-3

Categorization. Probability shall be categorized either as greater or as lesser probability.

a Greater probability results when the likelihood that an injury or illness will occur is judged to be relatively high.

b Lesser probability results when the likelihood that an injury or illness will occur is judged to be relatively low.

FOM CHAP. VI-6

For other-than-serious safety and health violations, there is no severity assessment.

a Other-than-serious safety and health violations judged to be of greater probability shall be assigned a GBP of $1,000 to which appropriate adjustment factors shall be applied. (See B.10.)

b Other-than-serious safety and health violations judged to be of lesser probability shall be cited with no penalty.

c The Regional Administrator may authorize a penalty up to $7,000 for an other-than-serious violation when it is determined to be appropriate to achieve the necessary deterrent effect. The reasons for such a determination shall be documented in the case file.

Serious

Severity	Probability	GBP	Probability	GBP
High	Greater	$5,000	Lesser	$2,500
Medium	Greater	$3,500	Lesser	$2,000
Low	Greater	$2,500	Lesser	$1,500

Other

Severity	Probability	GBP	Probability	GBP
No	Greater	$1,000	Lesser	$0

FOM CHAP. VI-6

IF the Regional Administrator determines that it is appropriate to achieve the necessary deterrent effect, a GBA of $7,000 may be proposed.

FOM CHAP. VI-9

Penalty Adjustment Factors. The GBP may be reduced by as much as 95 per cent depending upon the employer's "good faith," "size of business," and "history of previous violations." Up to 60-percent reduction is permitted for size; up to 25-percent reduction for good faith, and 10-percent for history.

a. Since these rates are based on the general character of a business and its safety and health performance, the rates shall generally be calculated only once for each employer--after the classification and probability ratings have been determined for each violation and the general character of the employer's performance is apparent.

b. Penalties assessed for violations that are classified as high severity and greater probability shall be adjusted only for size and history.

c. Penalties assessed for violations that are classified as repeated shall be adjusted only for size.

d. Penalties assessed for violations classified as willful shall have been adjusted only for size and history.

e. The rate of penalty reduction for size of business, employer's good faith and employer's history of previous violations shall be calculated on the basis of the criteria described in the following paragraphs:

PENALTY SUMMARY

DRAFT

FOM CHAPT. VI-9

Size. A maximum penalty reduction of 60 percent is permitted for small businesses. "Size of business" shall be measured on the basis of the maximum number of employees of an employer at all workplaces at any one time during the previous 12 months. Information on the total number of an employer's employees can generally be obtained at the inspected worksite. However, on occasion it may be necessary to obtain or confirm the information from the employer's headquarters.

a The rates of reduction to be applied are as follows:

Employees	Percent reduction
1-25	60
26-100	40
101-250	20
251 or more	None

FOM CHAP. VI-10

Good Faith. A penalty reduction of up to 25 percent is permitted in recognition of an employer's "good faith."

a A reduction of 25 percent shall normally be given if the employer has a written safety and health program (as documented during the inspection) that has been effectively implemented in the workplace and that:

1 Provides for appropriate management commitment and employee involvement; worksite analysis for the purpose of hazard identification; hazard prevention and control measures; and safety and health training.

NOTE: One example of a framework for such a program is given in OSHA's voluntary "Safety and Health Program Management Guidelines" (Federal Register, Vol. 54, No. 16, January 26, 1989, pp. 3904-3916, or later revisions as published).

b. Includes all programs required under OSHA standards applicable to the workplace (e.g., hazard communication, lockout-tagout, hazardous materials and emergency response, safety and health programs for construction [29 CFR 1926.20] and trenching and excavation).

c. Has deficiencies that are only incidental.

(b) A reduction of 15 percent shall normally be given if the employer has a documented safety and health program, but with more than only incidental deficiencies.

(c) No reduction shall be given to an employer who has no safety and health program.

FOM CHAP. VI-11

History. A reduction of 10 percent shall be given to employers who have not been cited by OSHA for any serious, willful, or repeated violations in the past three years.

Total. The total reduction will normally be the sum of the reductions for each adjustment factors.

FOM CHAP. VI-18

PENALTY TABLE

Percent Reduction	PENALTY (in dollars)							
0	1,000	1,500	2,000	2,500	3,000	3,500	5,000	7,000
10	900	1,350	1,800	2,250	2,700	3,150	4,500	6,300
15	850	1,275	1,700	2,125	2,550	2,975	4,250*	5,950*
20	800	1,200	1,600	2,000	2,400	2,800	4,000	5,600
25	750	1,125	1,500	1,875	2,250	2,625	3,750*	5,250*
30	700	1,050	1,400	1,750	2,100	2,450	3,500	4,900
35	650	975	1,300	1,625	1,950	2,275	3,250*	4,550*
40	600	900	1,200	1,500	1,800	2,100	3,000	4,200
45	550	825	1,100	1,375	1,650	1,925	2,750*	3,850*
50	500	750	1,000	1,250	1,500	1,750	2,500	3,500
55	450	675	900	1,125	1,350	1,575	2,250*	3,150*
60	400	600	800	1,000	1,200	1,400	2,000	2,800
65	350	525	700	875	1,050	1,225	1,750*	2,450*
70	300	450	600	750	900	1,050	1,500	2,100
75	250	375	500	625	750	875	1,250*	1,750*
85	150	225	300	375	450	525	750*	1,050*
95	50	75	100	125	150	175	250*	350*

* Starred figures represent penalty amounts that would not normally be proposed for high gravity serious violations because no adjustment for good faith is made in such cases. They may occasionally be applicable for other-than-serious violations where the Regional Administrator has determined a high unadjusted penalty amount to be warranted.

Servicing Single-Piece and Multi-Piece Rim Wheels

U. S. Department of Labor
Elizabeth Dole, Secretary

Occupational Safety and Health Administration
John A. Pendergrass, Assistant Secretary
1986 (Revised)
1989 (Reprinted)

OSHA 3086

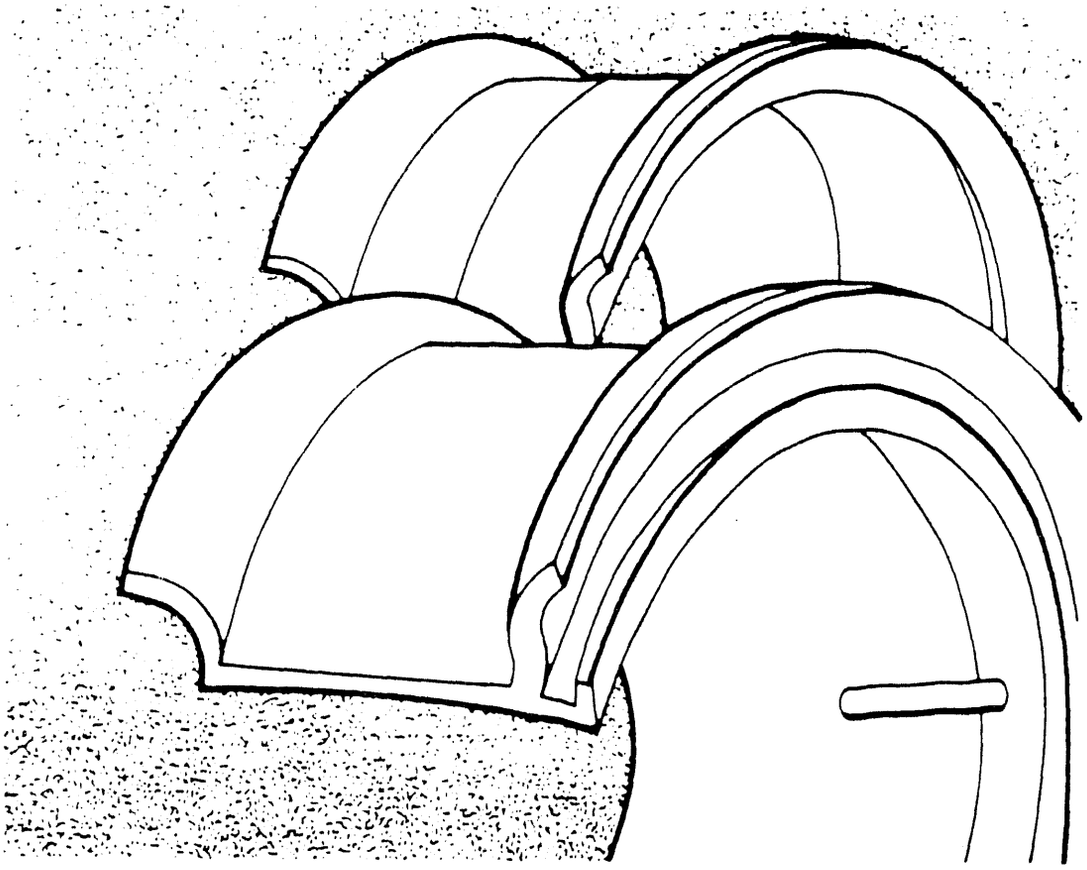

About This Pamphlet

The information contained in this pamphlet is not considered as a substitute for any provisions of the Occupational Safety and Health Act of 1970 or for any standards issued by the Occupational Safety and Health Administration.

Material contained in this publication is in the public domain and may be reproduced, fully or partially, without permission of the Federal Government Source credit is requested but not required

The information contained in this publication is not considered a substitute for any provisions of the standard

Introduction

In 1984, the Occupational Safety and Health Administration (OSHA) amended the safety standard for the servicing of multi-piece rim wheels (29 CFR 1910.177) to include requirements for the safe servicing of single-piece rim wheels used on large trucks, trailers, buses, and off-road machines.

Approximately 322,000 employees in over 100,000 workplaces service large vehicle tires that are mounted on either multi-piece or single-piece wheels.

There has been over a 70-percent reduction in multi-piece rim wheel servicing injuries since the original standard was issued in 1980--based on a review of the record of multi-piece rim wheel accidents investigated by OSHA. Similar results have been experienced with the regulation of single-piece rim wheel servicing where workers also face a significant risk of serious injury or death.

In brief, the amended standard requires training for all tire servicing employees, the utilization of industry-accepted procedures that minimize the potential for employee injury, the use of proper equipment such as clip-on chucks, restraining devices or barriers to retain the wheel components in the event of an incident during the inflation of tires, and the use of compatible components.

Types of Wheels/Tires

A rim wheel is the component assembly of wheel (either multi-piece or single piece), tire and tube, plus other components.

A single-piece wheel is the component of the assembly used to hold the tire, form part of the air chamber (with tubeless tires), and provide the means of attachment of the assembly to the vehicle axle. A multi-piece wheel is a vehicle wheel consisting of two or more parts, one of which is a side or locking ring that holds the tire and other components on the rim wheel by interlocking the components when the tire is inflated.

The standard does not apply to the servicing of rim wheels utilizing automobile tires or truck tires designated "LT."

Hazards

The principal difference between accidents involving single-piece rim

wheels and those involving multi-piece rim wheels is the effect of the sudden release of the pressurized air contained in a single-piece rim wheel.

In a multi-piece rim wheel accident, the wheel components separate and are released from the rim wheel with violent force. The severity of the hazard is related not only to the air pressure but also to the air volume.

Single-rim wheel accidents occur when the pressurized air contained in the tire is suddenly released, either by the bead breaking or by the bead slipping over the rim flange. The principal hazards involve pressurized air which, once released, can either pick up and hurl an employee across the shop if the employee is in close proximity to the rim wheel and within the trajectory, or can propel the rim wheel across workplace and into a worker. The trajectory of the air or rim wheel is any potential path or route (basically along the axis of the rim wheel) that a rim wheel component may travel during an explosive separation, or the area into which the airblast from a single-piece rim wheel may be released.

Employee Training

The employer must provide a program to train all employees who service rim wheels in the hazards involved and the safety procedures to be followed.

The employer must assure that no employee services any rim wheel unless the worker has been instructed in correct procedures of mounting, demounting, and servicing activities and the safe operating precautions for the type of wheel being serviced.

At a minimum, the training program must include the contents of the OSHA standard and the information in the manufacturers' rim manuals, or the OSHA charts. Charts are available from OSHA regional, area, or national offices.

The instruction must be conducted in an intelligible way. Employees who are unable to read the charts or rim manuals must be trained in the subject matter. The employer must assure that each worker demonstrates and then maintains the ability to service rim wheels safely by correctly performing the following tasks:

- demounting tires, including deflation
- inspecting and identifying rim wheel components
- mounting tires, including inflating them within a restraining

device or other safeguard
- handling rim wheels
- inflating tires when single-piece rim wheels are mounted on a vehicle
- understanding the necessity of standing outside the trajectory during inflation of the tires and of inspecting the rim wheels following inflation
- installing and removing rim wheels

The employer must regularly evaluate each employee's performance and provide additional training, as necessary, to assure that each employee maintains his or her proficiency

The Servicing Equipment

The employer must furnish a restraining device for inflating a tire on a multi-piece wheel, and must provide a restraining device or barrier for inflating a tire on a single-piece wheel unless the single-piece rim wheel is bolted onto a vehicle during inflation.

The restraining device can be a cage, rack, or an assemblage of bars and other parts that will constrain all rim wheel components during an explosive separation of the multi-piece rim wheel or during the sudden release of the contained air of a single-piece rim wheel

A barrier can be a fence, wall, or other structure or object placed between a single-piece rim wheel and an employee during tire inflation to contain the rim wheel components in the event of the sudden release of contained air. Each barrier or restraining device must be able to withstand the maximum force of an explosive rim wheel separation or release of the pressurized air occurring at 150 percent of the maximum tire specification pressure for the rim wheel being serviced.

Restraining devices showing any of the following defects must be immediately removed from service

- cracks at welds
- cracked or broken components
- bent or sprung components caused by mishandling, abuse, tire explosion, or rim wheel separation
- component pitted due to corrosion or other structural damage that would decrease its effectiveness

Restraining devices or barriers removed from service must not be

returned to service until they are repaired and reinspected. Restraining devices or barriers requiring structural repair such as component replacement or rewelding must not be returned to service until they are certified by either the manufacturer or a Registered Professional Engineer as meeting the strength requirements as stated above (the force of 150 percent of the maximum tire specification pressure)

Current charts or rim manuals containing instructions for the types of wheels being serviced must be available in the service area, including a mobile service unit.

Only tools that are recommended in the rim manual may be used for the type of wheel being serviced.

The employer must also supply air line equipment with a clip-on chuck with sufficient length of hose between the chuck and in-line valve or regulator to allow the employee to stand outside the trajectory, as well as an in-line valve with a pressure gauge or a presettable regulator.

The size (bead diameter and tire/wheel width) and type of both the tire and wheel must be checked for compatibility prior to assembly of the rim wheel. Mismatching of half sizes such as 16-inch and 16.5-inch tires and wheels must be avoided.

Multi-piece wheel components must not be interchanged except as indicated in the applicable charts or rim manuals.

Multi-piece wheel components and single-piece wheels must be inspected prior to assembly. Any wheel or wheel component that is bent out of shape, pitted from corrosion, broken, or racked must be marked or tagged "unserviceable" and removed from the service area. Damaged or leaky valves must be replaced.

Rim flanges, rim gutters, rings, and the bead-seating areas of wheels must be free of any dirt, surface rust, scale, or loose or flaked rubber buildup prior to tire mounting and inflation.

Safe Operating Procedures: Multi-Piece Rim Wheels

Employers must instruct employees to use the following steps for safe operating procedures:

1. The tire must be completely deflated by removing the valve core before a rim wheel is removed from the axle in the following situations

- when the tire has been driven underinflated at 80 percent or less of its recommended pressure, or

- when there is obvious or suspected damage to the tire or wheel components

2 The tire must be completely deflated by removing the valve core before demounting.

3 A rubber lubricant must be applied to the bead and rim mating surfaces when assembling the wheel and inflating the tire unless the tire or wheel manufacturer recommends against its use

4 If a tire on a vehicle is underinflated but has more than 80 percent of the recommended pressure, the tire may be inflated while the rim wheel is on the vehicle, provided remote control inflation equipment is used and no employee remains in the trajectory during inflation.

5 The tire shall be inflated outside a restraining device only to a pressure sufficient to force the tire bead onto the rim ledge and create an airtight seal with the tire and bead

6 Whenever a rim wheel is in a restraining device the employee must not rest or lean any part of his/her body, or equipment, on or against the restraining device

7 After tire inflation the tire and wheel must be inspected while still within the restraining device to make sure that they are properly seated and locked If further adjustment is necessary, the tire must be deflated by removing the valve core before the adjustment is made

8 An attempt must not be made to correct the seating of side and locking rings by hammering, striking forcing the components while the tire is pressurized

9 Cracked, broken, bent, or otherwise damaged wheel components must not be reworked, welded brazed, or otherwise heated Heat must not be applied to a multi-piece wheel

10 Whenever multi-piece rim wheels are being handled employees must stay out of the trajectory unless the employer can show that performance of the servicing makes the employee's presence in the trajectory necessary

Safe Operating Procedures: Single-Piece Rim Wheels

Employees must be instructed in and must use the following steps for safe operating procedures with single-piece wheels

1. The tire must be completely deflated by removal of the valve core before demounting.

2. Mounting and demounting of the tire must be performed only from the narrow ledge side of the wheel. Care must be taken to avoid damaging the tire beads, and the tire must be mounted only on a compatible wheel of mating bead diameter and width.

3. A nonflammable rubber lubricant must be applied to bead and wheel mating surfaces before assembling the rim wheel, unless the tire or wheel manufacturer recommends against the use of any rubber lubricant.

4. If a tire changing machine is used, the tire may be inflated only to the minimum pressure necessary to force the tire bead onto the rim ledge and create an airtight seal before removal from the tire changing machine.

5. If a bead expander is used, it must be removed before the valve core is installed and as soon as the rim wheel becomes airtight (when the tire bead slips onto the bead seat).

6. The tire may be inflated only when contained within a restraining device, positioned behind a barrier, or bolted on the vehicle with the lug nuts fully tightened.

7. The tire must not be inflated when any flat, solid surface is in the trajectory and within 1 foot of the sidewall.

8. The tire must not be inflated to more than the inflation pressure stamped in the sidewall unless a higher pressure is recommended by the manufacturer.

9. Employees must stay out of the trajectory when the tire is being inflated.

10. Heat must not be applied to a single-piece wheel.

11. Cracked, broken, bent, or otherwise damaged wheels must not be reworked, welded, brazed, otherwise heated.

Related Publications

Single copies of the following OSHA publications and the rim wheel charts are available from OSHA Regional and Area offices, or from the OSHA Publications Office, 200 Constitution Avenue, N. W., Room N3101, Washington, D. C. 20210. Please send a self-addressed label with your request.

Title 29, Code of Federal Regulations (CFR), Parts 1900-1910

OSHA Rim Wheel Servicing Charts

Hand and Power Tools - OSHA 3080

Controlling Electrical Hazards - OSHA 3075

All About OSHA - OSHA 2056

Wheel Manufacturers' Rim Manuals (available from the manufacturer and related trade associations)

U.S. Department of Labor
Occupational Safety and Health Administration
Regional Offices

Region I
(CT,* MA, ME, NH, RI, VT*)
133 Portland Street
1st Floor
Boston, MA 02114
Telephone (617) 565-7164

Region II
(NJ, NY,* PR, VI*)
201 Varick Street
Room 670
New York, NY 10014
Telephone (212) 337-2378

Region III
(DC, DE, MD,* PA, VA,* WV)
Gateway Building Suite 2100
3535 Market Street
Philadelphia, PA 19104
Telephone (215) 596-1201

Region IV
(AL, FL, GA, KY,* MS, NC,* SC,* TN*)
1375 Peachtree Street, N E
Suite 587
Atlanta, GA 30367
Telephone (404) 347-3573

Region V
(IL, IN,* MI,* MN,* OH, WI)
230 South Dearborn Street
Room 3244
Chicago, IL 60604
Telephone (312) 353-2220

Region VI
(AR, LA, NM,* OK, TX)
525 Griffin Street
Room 602
Dallas, TX 75202
Telephone (214) 767-4731

Region VII
(IA,* KS, MO, NE)
911 Walnut Street
Room 406
Kansas City, MO 64106
Telephone (816) 426-5861

Region VIII
(CO, MT, ND, SD, UT,* WY*)
Federal Building, Room 1576
1961 Stout Street
Denver, CO 80294
Telephone (303) 844-3061

Region IX
(AZ,* CA,* HI,* NV*)
71 Stevenson Street
Room 415
San Francisco, CA 94105
Telephone (415) 995-5672

Region X
(AK,* ID, OR,* WA*)
Federal Office Building
909 First Avenue
Room 6003
Seattle, WA 98174
Telephone (206) 442-5930

*These states and territories operate their own OSHA-approved job safety and health programs (the Connecticut and New York plans cover public employees only and OSHA currently is exercising concurrent private-sector Federal enforcement authority in California).

Free for the asking.

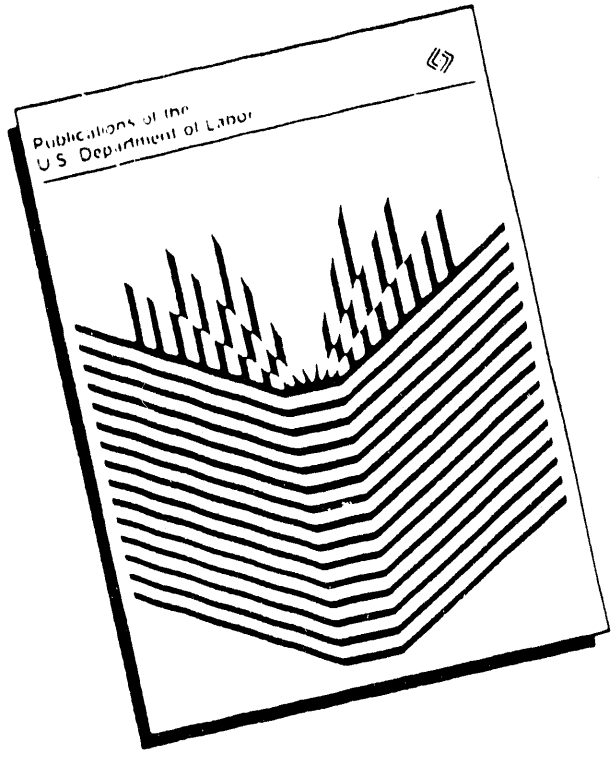

Over 800 title listings in 26 labor categories on subjects from agricultural labor to youth employment.

For your **free copy** of "Publications of the U.S. Department of Labor", write —

U.S. Department of Labor
Room S-1032
200 Constitution Avenue, N.W.
Washington, D.C. 20210

#	REACTIVITY GROUP NAME
1	Acids,Mineral,Non-oxidizing
2	Acids,Mineral,Oxidizing
3	Acids,Organic
4	Alcohols & Glycols
5	Aldehydes
6	Amides
7	Amines,Aliphatic & Aromatic
8	Azo Compounds,Diazo Compounds,& Hydrazines
9	Carbamates
10	Caustics
11	Cyanides
12	Dithiocarbamates
13	Esters
14	Ethers
15	Flourides,Inorganic
16	Hydrocarbons,Aromatic
17	Halogenated Organics
18	Isocyanates
19	Ketones
20	Mercaptans & Other Organic Sulfides
21	Metals,Alkali & Alkaline Earth,Elemental
22	Metals,Other Elemental,& Alloys as Powders,Vapors or Sponges
23	Metals,Other Elemental,& Alloys as Sheets,Rods,Moldings,Drops,etc
24	Metals, & Metal Compounds,Toxic
25	Nitrides
26	Nitriles
27	Nitro Compounds
28	Hydrocarbon,Aliphatic,Unsaturated
29	Hydrocarbon,Aliphatic,Saturated
30	Peroxides & Hydroperoxides,Organic
31	Phenols & Creosols
32	Organophosphates,Phosphothioates & Phosphodithioates
33	Sulfides,Inorganic
34	Epoxides
101	Combustible & Flammable Materials,Miscellaneous
102	Explosives
103	Polymerizable Compounds
104	Oxidizing Agents,Strong
105	Reducing Agents,Strong
106	Water & Mixtures Containing Water
107	Water Reactive Substances

H	Heat Generation
F	Fire
G	Innocuous & non-flammable gas generated
GT	Toxic gas generated
GF	Flammable gas generation
E	Explosion
P	Violent Polymerization
S	Solubilization of toxic substances
L	May be hazardous but unknown

Example

H / F GT — Heat generation, Fire and Toxic gas generated

EXTREMELY REACTIVE ← DO NOT MIX WITH ANY CHEMICAL OR WASTE MATERIAL → EXTREMELY REACTIVE

1	2	3	4	5	6	7	8	9	10	11	12	13	14	15	16	17	18	19	20	21	22	23	24	25	26	27	28	29	30	31	32	33	34	101	102	103	104	105	106	107

INSPECTION RESPONSIBILITIES AND PROCEDURES

PURPOSE

The purpose of this lesson is to instruct the student on inspection responsibilities, requirements, and procedures which will enable the student to identify and describe typical safety and health hazards in an actual work environment.

OBJECTIVES

1. State two purposes of a workplace inspection.
2. Describe three methods of hazard abatement.
3. Conduct a workplace inspection.

REFERENCES

1. 29 CFR 1910 Occupational Safety and Health Standards for General Industry, United States Department of Labor
2. 29 CFR 1960 Basic Program Elements for Federal Employee Occupational Safety and Health Programs and Related Matters
3. DOE Order 5482.1B

DURATION

One hour

INSTRUCTOR MATERIALS

Course manual with instructors notes.

Battelle
Pacific Northwest Laboratory is operated for the U.S. Department of Energy by Battelle Memorial Institute.

Inspection Responsibilities and Procedures

Objectives

1. State two purposes of a workplace inspection.
2. Describe three methods of hazard abatement.
3. Conduct a workplace inspection.

Purpose of Inspection

- Identify hazards and unsafe acts, and recommend corrective actions
- Assure compliance with appropriate safety codes, standards and regulations
- Assess the effectiveness of the safety program management

Inspection Requirements for Federal Agencies

- 29 CFR 1960 Subpart D—Inspection and Abatement
- Sections in this subpart include:
  - Qualifications of safety and health inspectors
  - Conduct of inspections
  - Representatives of officials in charge and representatives of employees

Inspection and Abatement

- Employee reports of unsafe or unhealthful working conditions
- Accident investigation
- Abatement of unsafe or unhealthful working conditions
- Inspections by OSHA

Frequency of Inspection

- "All areas and operations of each workplace, including office operations, shall be inspected at least annually. Sufficient unannounced inspections and unannounced follow-up inspections should be conducted by the agency to ensure the identification and abatement of hazardous conditions."

5482.1B Conduct of Inspections

- Prior to beginning the inspection, the inspector shall be provided with all available relevant injury and illness information.
- The inspector shall determine in advance the procedures to be inspected to ensure the appropriate personal protection.

Preparation for Inspections

- Acquire and digest all pertinent information on the type of operation to be inspected
- Review the details of the operations, generally and specifically
- Determine applicable standards
- Define the work areas
- Plan the inspection route
- Prepare or obtain checklists

Inspections

- The head of the agency shall authorize inspectors to:
  - inspect during regular working hours and other reasonable times
  - question privately any employee, supervisor or official in charge
  - consult with a reasonable number of employees
  - collect personal samples if needed

Organization of Inspection

- Opening conference
  - inform employer of inspection objective
  - outline scope of inspection
  - affords employee rep opportunity of accompaniment
- Accompaniment
  - employee reps provide assistance and information

Organization of Inspection

- Inspection of records and posting compliance
  - Forms 100F, 101F, 102F, 103F
  - Form 200 must be posted in February
  - Safety committee minutes and checklists
  - Other records (hazard communication requirements)

Organization of Inspection

- During walkaround, record the following information:
  - observed apparent violation
  - location, diagram
  - employee interviews
- Closing conference
  - Advise agency and employees of apparent violations and provides copies of applicable standards

Imminent Danger

- Whenever and as soon as it is concluded that a danger exists which could reasonably be expected to cause death or serious physical harm immediately, the inspector shall inform the affected employees and the official in charge

Inspection Performance

- Make inspection while employees are working
- Use simple forms or notes during inspection
- Be alert for all hazards and conditions
- Record unsafe practices and conditions
- Check for general conditions and specific items
- Check all areas - don't be steered away
- Don't be a disturbing influence

Inspection Performance

- Be constructive
- Look for "why" conditions exist
- Advise supervisors, but do not argue with them
- Discuss recommendations with supervisors
- Try to "sell" your recommendations to assure early abatement

Closing Conference

- At the conclusion of an inspection, the inspector shall confer with the official in charge or their representative and with an employee representative to informally advise them of any apparent unsafe or unhealthful conditions

Written Reports and Notices

- A procedure shall be established for the prompt issuance of a Notice of Unsafe or Unhealthful Working Conditions:
  - no later than 15 days for safety violations
  - no later than 30 days for health violations
- Notice shall be posted until abated or for 3 working days whichever is later

Representation

- Representatives of officials in charge and employees:
  - both shall be given the opportunity to accompany the inspector
  - the employee representative shall be elected by the employees

Employee Reports

- Employees shall have the right to make a report of unsafe or unhealthful working conditions
- The name of the employee making the report will be kept confidential
- Employee reports shall be recorded on a log and sent to the appropriate safety and health committee

Inspection of Employee Complaints

- Inspections shall be conducted within the following time frame:
  - 24 hours for imminent danger conditions
  - 3 days for serious conditions
  - 20 days for other than serious
- Notification shall be made to the employee within 15 days if no inspection will be made

Abatement

- Abatement of unsafe or unhealthful working conditions
- The procedures for correcting unsafe or unhealthful conditions shall:
  - be assured by the Agency
  - include follow-up to determine whether the correction was made

Abatement

- Hazards can be abated in four ways:
  - substitution or elimination
  - engineering controls
  - administrative controls
  - personal protective equipment

Inspections by OSHA

- 1960.31 OSHA is authorized to conduct announced or unannounced inspections in the following situations:
  - where an agency has not established safety and health committees
  - in response to a committee request
  - in response to imminent danger
- OSHA may also make scheduled inspections as part of their evaluation of an agency's program

Orientation to Occupational Safety
Compliance in DOE (P-101)

INSPECTION WORKSHEET

Location:_____ Date:_____

Item	Violation	Standard

EXAMPLES OF WHAT TO CHECK IN A SAFETY INSPECTION

This list does not cover all conditions. It is intended as a guide.

RECEIVING, SHIPPING, STORAGE

Equipment, job planning, layout, heights, floor loads, projection of materials, material-handling methods

BUILDING CONDITIONS

Floors, walls, ceilings, exits, stairs, walkways, ramps, platforms, driveways, aisles

HOUSEKEEPING

Waste disposal, tools, objects, materials, leakage and spillage, methods, schedules, work areas, remote areas, windows, ledges

ELECTRICITY

Equipment, switches, breakers, fuses, switchboards, junctions, special fixtures, circuits, insulation, extensions, tools, motors, grounding, code compliance

LIGHTING

Type, intensity, controls, condition, diffusion, location, glare and shadow control, standards applied

HEATING AND VENTILATION

Type, effectiveness, temperature, humidity, controls, natural and artificial ventilation and exhausting

MACHINES

Points of operation, flywheels, gears, shafts, pulleys, key ways, belts, couplings, sprockets, chains, frames, controls, lighting, tools and equipment, brakes, exhausting, feeding, oiling, adjusting, maintenance, grounding, how attached, work space, location

PERSONNEL

Training, experience, methods of checking machines before use, methods of cleaning, oiling, or adjusting machinery, type clothing, personal protective equipment, use of guards, tool storage, work practices

HAND AND POWER TOOLS

Purchasing standards, inspection, storage, repair, types, maintenance, grounding, use and handling

CHEMICALS

Storage, handling, transportation, amounts used, warning signs, supervision, training, protective clothing and equipment

FIRE PREVENTION

Extinguishers, alarms, sprinklers, smoking rules, exits, personnel assigned, separation of flammable materials and dangerous operations, explosion-proof fixtures, waste disposal

MAINTENANCE

Regularity, effectiveness, training of personnel, materials, and equipment used, method of locking out machinery, general methods

PERSONAL PROTECTION

Type, size, maintenance, repair, storage, assignment of responsibility, purchasing methods, standards observed, rules of use, method of assignment

SAFETY AND HEALTH INSPECTION GUIDE FOR OFFICES

PURPOSE. This guide was developed for use by safety and health inspectors in conducting inspections of office areas. In addition, this guide can be used for training collateral duty safety and health personnel, employee representatives, and safety and health committee members thereby enabling such groups to function appropriately in ensuring a safe and healthful office environment.

1. FIRE PROTECTION.

   a. Good housekeeping (trash/loose papers).
   b. Books/paper/printouts (properly stored).
   c. Exit lights (visible, operational).
   d. Emergency lights (necessary, visible, operational, properly positioned).
   e. Emergency egress (adequate, no obstructions).
   f. Fire extinguishers (inspected, operational, adequate).
   g. Fire systems (detection, alarms).
   h. Flammable/combustible liquids (approved and properly labeled containers, properly stored, minimum quantities, necessary).

2. TRIPPING, SLIPPING, AND FALLING HAZARDS.

   a. Floors kept clean and dry.
   b. Uneven walking surfaces clearly indicated.
   c. Carpeting or floor covering (secured, torn, curled).
   d. Floor tiles (broken, missing, loose, slip resistant wax).
   e. Stairways (clean, suitable handrails, anti-slip treads).
   f. Outlets (appropriately placed/protected).
   g. Extension cords (tripping hazard, covered when crossing walking areas).
   h. Ladders or stands available for high files.
   i. Desk and file cabinet drawers kept closed.

3. EQUIPMENT.

   a. Properly guarded (belts, gears, pulleys).
   b. Cabinets/shelves (secured, properly loaded).
   c. Furniture (condition, properly utilized).
   d. Office layout (arrangement, walkways).
   e. Protruding objects eliminated or guarded (pencil sharpeners).

Vertical line denotes change.

4. ELECTRICAL HAZARDS.

a. Electrical equipment (UL approved, properly connected, no defects in cords and wiring, circuits not overloaded).
b. Electrical equipment properly grounded.

5. INDUSTRIAL HYGIENE.

a. Illumination (adequate lighting).
b. Noise (sound enclosures for printers).
c. Sanitation (clean work environment).
d. Ventilation (adequate ventilation for copiers and microfiche printers).
e. Video display terminals (proper illumination, free from glare, appropriate furniture).
f. Chemicals/solvents (material safety data sheets, hazardous materials specially identified).

6. OTHER ITEMS.

a. Floors are adequate to carry loads placed upon them.
b. Unlettered doors provided with clearly visible identifying marks.
c. Solid swinging doors provided with clear glass observation panels.
e. Conditions existing adjacent to DOE occupied space evaluated as a source of danger to employees.
f. First-aid services provided or arranged.

Vertical line denotes change.

OSHA Handbook for Small Businesses

Safety Management Series

U.S. Department of Labor
Occupational Safety and Health Administration
1990 (Revised)

OSHA 2209

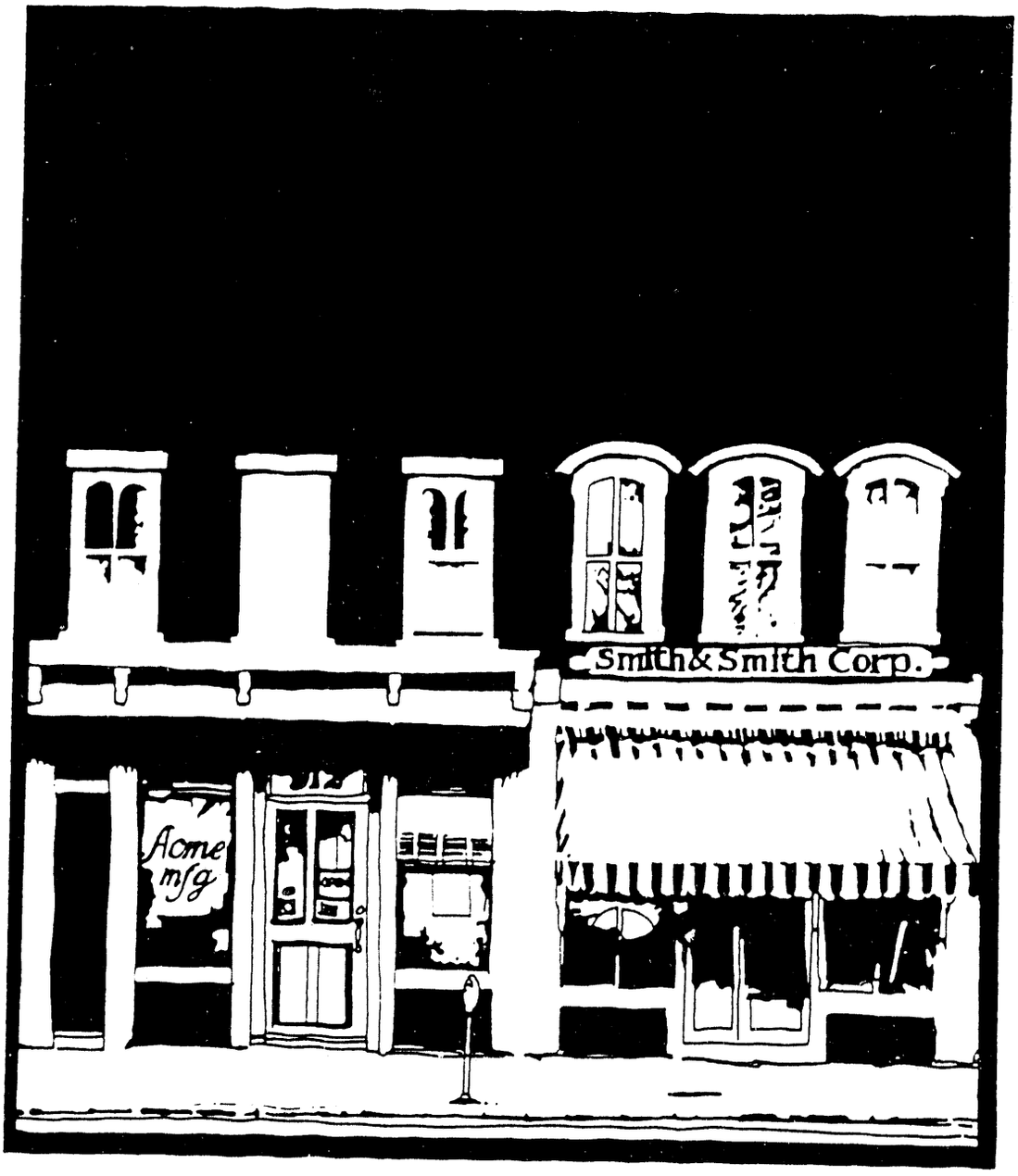

ABOUT THIS BOOKLET

This booklet is being provided free of charge to owners, proprietors, and managers of small businesses by the Occupational Safety and Health Administration (OSHA), an agency of the U.S. Department of Labor.

The handbook should assist small business employers to meet the legal requirements imposed by, and under, the authority of the Occupational Safety and Health Act of 1970 (P.L. 91-596) and achieve an in-compliance status voluntarily prior to an inspection performed pursuant to the Act.

The materials in this handbook are based upon the federal OSHA standards and other requirements in effect at the time of publication, and upon generally accepted principles and activities within the job safety and health field.

This booklet is not intended to be a legal interpretation of the provisions of the Occupational Safety and Health Act of 1970 or to place any additional requirements on employers or employees.

The material presented herein will be useful to small business owners or managers and can be adapted easily to individual establishments.

All employers should be aware that there are certain states (and similar jurisdictions) which operate their own programs under agreement with the U.S. Department of Labor, pursuant to section 18 of the Act. The programs in these jurisdictions may differ in some details from the federal program.

Material contained in this publication is in the public domain and may be reproduced, fully or partially, without permission of the federal government. Source credit is requested but not required. Permission is required only to reproduce copyrighted photos and other copyrighted material contained herein.

OSHA Handbook for Small Businesses

Safety Management Series

U.S. Department of Labor
Elizabeth Dole, Secretary

Occupational Safety and Health Administration
Gerard F. Scannell, Assistant Secretary
1990 (Revised)

OSHA 2209

To the Small Business Employer

Small business employers may have special problems in dealing with workplace safety and health hazards. Whereas large corporations can afford the full-time services of safety engineers and industrial hygienists, small firms often cannot.

Yet the workplace hazards that cause thousands of injuries and illnesses every year are as prevalent in small businesses as in larger firms. That is why we have prepared this Handbook--to help small business employers establish their own safety and health programs. This booklet advises employers on how to manage safety and health protection at their own worksites, and tells how to obtain free, on-site consultations by safety and health professionals.

We at OSHA hope that each small business owner will recognize the value of positive, cooperative action--among employers, employees, and government -- to provide safe and healthful workplaces throughout the Nation.

Please fill out and return the questionnaire in the back of the Handbook. Tell us what you think, how the book can be improved, or anything else we can do to help you in this vital effort.

Gerard F. Scannell
Assistant Secretary of Labor
Occupational Safety and Health Administration

CONTENTS

	Page
To the Small Business Employer	3
INTRODUCTION	5
A Profit and Loss Statement	5
Developing a Profitable Strategy for Handling Occupational Safety and Health	6
A FOUR-POINT WORKPLACE PROGRAM	7
Using the Four Point Program	7
Management Commitment and Employee Involvement	7
Worksite Analysis	9
Hazard Prevention and Control	10
Training for Employees, Supervisors and Managers	11
Documenting Your Activities	12
Safety and Health Recordkeeping	12
Injury/Illness Records	12
Exposure Records and Others	13
STARTING YOUR VOLUNTARY ACTIVITY	13
Decide to Start Now	13
Designating Responsibility	14
Get Some Help on the Details	14
Clean Up Your Place of Business	15
Start Gathering Facts About Your Situation	15
Establish Your Four-Point Safety and Health Program	16
Develop and Implement Your Action Plan	18
SELF-INSPECTION	19
Make A Self-Inspection of Your Business	19
Self-Inspection Scope	20
Self-Inspection Check Lists	21
ASSISTANCE IN PROBLEM SOLVING	37
Free On-site Consultation	37
Direction of Approved Sources of OSHA Funded Consultation	38
Multiple Sources of Help	43
Professional Associations	44
Contacting OSHA Offices	45
Area Offices	45
Regional Offices	48
State-Operated Compliance Programs	49
Model Policy Statements	50
Codes of Safe Practices	51
OSHA Job Safety and Health Standards	52
Financing Workplace Improvements	54
Action Plan Worksheet	55

I. INTRODUCTION

A Profit and Loss Statement

As a small business owner, you are characteristically a risk taker. You wager your business acumen against larger, perhaps more heavily financed corporate groups and other free-spirited, self-employed individuals like yourself. There are excitement and challenge in such a venture. But to succeed, you need good management information, an ability to be a good manager of people and the intelligence and inner strength both to make decisions and to make the right decisions.

Thousands of workers die each year, and many, many more suffer injury or illness from conditions at work. But how often does an owner or manager like you actually see or even hear about work-related deaths, serious injuries, or illnesses in the businesses with which you are familiar? How often has your business actually sustained this type of loss?

In most small businesses, the answer is rarely. For this reason, many owners/managers do not understand why there is controversy about OSHA, job safety and health standards, inspections, citations, etc.

But others have learned why. Unfortunately, they have had to go through the kind of loss we are talking about. And these owner/ managers will tell you that it is too late to do anything once a serious accident happens. They now know that **prevention** is the only real way to avoid this loss.

Reducing all losses is a goal that you as an owner or manager clearly share with us in OSHA. Each of us may see this goal in a slightly different light, but it remains our common intent.

We have learned from small employers, like you, that you place a high value on the health and well-being of your employees. Like many small businesses, you probably employ family members and personal acquaintances. And, if you don't know your employees before they are hired, then chances are that the very size of your workgroup and workplace will promote the closeness and concern for one another that small businesses value.

Assuming that your commitment to safe and healthful work practices is a given ingredient, we in OSHA want to work with you to prevent all losses. We believe that, when you make job safety and health a real part of your everyday operations, you cannot lose in the long run.

Successful safety and health activity now will enable you to avoid possible losses in the future.

Developing a Profitable Strategy for Handling Occupational Safety and Health

Many people confuse the idea of "accidents" with the notion of Acts of God. The difference is clear Floods and tornadoes cannot be prevented by the owner or manager of a small business. But workplace accidents can be prevented; and indeed floods and tornadoes can be anticipated and prepared for.

Nobody wants accidents to happen in his or her business. A serious fire or the death of an employee or an owner can cause the loss of a great amount of profit or, in some cases, even an entire business. To prevent such losses, you don't have to turn your place upside down You may not have to spend a lot of money, either. You may only need to use good business sense and to apply recognized prevention principles.

There are reasons why accidents happen. Something goes wrong somewhere It may take some thought, and maybe the help of friends or other trained people, to figure out what went wrong, but there will be a cause--a reason why. Once you know the cause, it is possible to prevent an accident. You need some basic facts, and perhaps some help from others who know some of the answers already. You also need a plan--a plan for preventing accidents.

Not all danger at your worksite depends on an accident to cause harm, of course. Worker exposure to toxic chemicals or harmful levels of noise or radiation may happen in conjunction with routine work as well as by accident You may not realize the extent of the exposure on the part of you and/or your employees, or of the harm that may result. The effect may not appear immediately, but it may be fatal in the long run. You need a plan that includes prevention of these "health hazard exposures" as well as accidents. You need a *safety and health protection plan*.

It is not a difficult task to develop such a plan. Basically, you only need to concern yourself with those types of accidents and health hazard exposures which *could* happen in your workplace.

Because each workplace is different your program may be different from one that your neighbor or your competitor might use But this is not important. You want it to reflect *your* way of doing business not theirs.

While the details may vary there are four basic elements that are always found in workplaces with a good accident prevention program These are as follows.

1. The manager or management team leads the way, especially by setting policy assigning and supporting responsibility setting an example and involving employees.

2. The worksite is continually analyzed to identify all hazards and potential hazards.

3. Methods for preventing or controlling existing or potential hazards are put in place and maintained

4. Managers, supervisors, and employees are trained to understand and deal with worksite hazards

Regardless of the size of your business, you should use each of these elements to prevent workplace accidents and possible injuries and illnesses.

Developing a workplace program following these four points should lead you to do all the things needed to protect you and your workers' safety and health. If you already have a program, reviewing it in relation to these elements should help you improve what you have.

If you follow it, this four-point approach to safety and health protection in your business should also help you to improve efficiency. It may help you reduce insurance claims and other costs. While it does not guarantee complete compliance with OSHA standards, the approach will help you toward full compliance and beyond. It will certainly give you a way to express and document your good faith.

This approach usually does not involve large costs. Especially in smaller businesses, it generally does not require additional employees. Usually it can be integrated into your other business functions with modest effort on your part.

The key to the success of this plan is to see it as a part of your business operation and to see it reflected in all your work. As you continue doing it, the program becomes easier. It becomes built-in and then you need only check on it periodically to be sure everything's working well.

In *Section 2*, we give short titles for each of the elements and then give short descriptions and illustrations for each. Since most employers, like you, are pressed for time, these descriptions are capsules of information to assist you in thinking through and getting started on your own approach.

II. A FOUR-POINT WORKPLACE PROGRAM

The Four-Point Workplace Program described here is based upon the Safety and Health Management Guidelines issued by OSHA on January 26, 1989. Although voluntary, these guidelines represent OSHA's policy on what every worksite should have in place to protect workers from occupational hazards. The guidelines are based heavily on OSHA's experience with the Voluntary Protection Programs (VPP). These voluntary programs are designed to recognize and promote effective safety and health management as the best means of ensuring a safe and healthful workplace.

Using The Four-Point Program

As you go through this section and those that follow, we encourage you to use the Action Plan form that you can remove from the back of this publication to jot down the actions that you wish to take to help make your workplace safer and more healthful for your employees. Noting those actions as you go along will make it much easier for you to assemble the total plan you need.

POINT ONE:
Management Commitment and Employee Involvement

As the owner or manager of a small business, your attitude towards job safety and health will be reflected by your employees. If you are not interested in preventing employee injury and illness, nobody else is likely to be.

At all times, demonstrate your personal concern for employee safety and health and the priority you place on them in your workplace. Your policy must be clearly set. Only you can show its importance through your own actions.

Demonstrate to your employees the depth of your commitment by involving them in planning and carrying out your efforts. If you seriously involve your employees in identifying and resolving safety and health problems, they will commit their unique insights and energy to helping achieve the goal and objectives of your program.

Consider forming a joint employee-management safety committee. This can assist you in starting a program and will help maintain interest in the program once it is operating. Committees can be an excellent way of communicating safety and health information. If you have few employees, consider rotating them so that all can have an active part in the safety and health programming. The men and women who work for you are among the most valuable assets you have. Their safety, health and goodwill are essential to the success of your business. Having them cooperate with you in protecting their safety and health not only helps to keep them healthy--it makes your job easier.

As a small business employer you have inherent advantages, such as close contact with your employees, a specific acquaintance with the problems of the whole business and usually a low worker turnover. Probably you have already developed a personal relationship of loyalty and cooperation that can be built up very easily. These advantages may not only increase your concern for your employees but also may make it easier to get their help.

Here are some actions to take:

- Post your own policy on the importance of worker safety and health next to the OSHA workplace poster where all employees can see it.

- Hold a meeting with all your employees to communicate that policy to them and to discuss your objectives for safety and health for the rest of the year. (These objectives will result from the decisions you make about changes you think are needed after you finish reading this publication.)

- Make sure that support from the top is visible by taking an active part, personally, in the activities that are part of your safety and health program. For example, personally review all inspection and accident reports to ensure followup when needed.

- Ensure that you, your managers, and supervisors follow all safety requirements that employees must follow, even if you are only in their area briefly. If, for instance, you require a hard hat, safety glasses and/or safety shoes in an area, wear them yourself when you are in that area.

- Use your employees' special knowledge and help them buy into the program by having them make inspections, put on safety training and/or help to investigate accidents.

- Make clear assignments of responsibility for every part of the program that you develop. Make certain everyone understands them. The more people involved, the better. A good rule of thumb is to assign safety and health responsibilities in the same way you assign production responsibilities. Make it a special part of everyone's job to operate safely. That way, as you grow and disperse production responsibilities more widely, you will disperse safety and health responsibilities with them.

- Give those with responsibility enough people, on-the-clock time, training, money and authority to get the job done.

- Don't forget about it after you make assignments, make sure personally that they get the job done. Recognize and reward those who do well, and correct those who don't.

- Take time, at least annually, to review what you have accomplished against what you set as your objectives and decide if you need new objectives or program revisions to get where you want to be.

POINT TWO:
Worksite Analysis

It is your responsibility to know what you have in your workplace that could hurt your workers. Worksite analysis is a group of processes that helps you make sure that you know what you need to keep your workers safe. You may need help in getting started with these processes. You can call on your state Consultation Program for this help. Once you get everything set up, you or your employees can do many of them.

Here are some actions to take:

- Request a consultation visit from your state Consultation Program covering both safety and health to get a full survey of the hazards which exist in your workplace and those which could develop. (You can also contract for such services from expert private consultants if you prefer.)

- Set up a way to get expert help when you make changes, to be sure that the changes are not introducing new hazards into your workplace. Also, find ways to keep current on newly recognized hazards in your industry.

- Make an assignment (maybe to teams that include employees) to look carefully at each job from time to time, taking it apart step-by-step to see if there are any hidden hazards in the equipment or procedures. Some training may be necessary at the start.

- Set up a system of checking to make sure that your hazard controls haven't failed and that new hazards haven't appeared. This is usually done by routine self-inspections. You can use the checklist in Section IV of this book as a starting point. Add items to it that better fit your situation. Subtract from it those items that do not fit your situation. Your state consultant can probably assist you to establish an effective system.

- Provide a way for your employees to let you or another member of management know when they see things that look harmful to them and encourage them to use it.

- Learn how to do a thorough investigation when things do go wrong and someone gets sick or hurt. This will help you find ways to prevent recurrences.

- Initially, take the time to look back over several years of injury or illness experience to identify patterns that can lead to further prevention. Thereafter, periodically look back over several months of experience to determine if any new patterns are developing.

POINT THREE:
Hazard Prevention and Control

Once you know what your hazards and potential hazards are, you are ready to put in place the systems that prevent or control those hazards. Your state consultant can help you do this Whenever possible, you will want to eliminate those hazards. Sometimes that can be done through substitution of a less toxic material or through engineering controls that can be built in. When you cannot eliminate hazards, systems should be set up to control them.

Here are some actions to take.

- Set up safe work procedures, based on the analysis of the hazards in your employees jobs (discussed above), and make sure that the employees doing each job understand the procedures and follow them. This may be easier if employees are involved in the analysis that results in those procedures.

- Be ready, if necessary, to enforce the rules for safe work procedures by asking your employees to help you set up a disciplinary system that will be fair and understood by everyone.

- Where necessary to protect your employees, provide personal protective equipment (PPE) and be sure your employees know why they need it, how to use it and how to maintain it.

- Provide for regular equipment maintenance to prevent breakdowns that can create hazards.

- Plan for emergencies, including fire and natural disasters, and drill everyone frequently enough so that if the real thing happens, everyone will know what to do even under stressful conditions.

- Ask your state consultant to help you develop a medical program that fits your worksite and involves nearby doctors and emergency facilities. Invite these medical personnel to visit the plant before emergencies occur and help you plan the best way to avoid injuries and illness during emergency situations.

- You must ensure the ready availability of medical personnel for advice and consultation on matters of employee health. **This does not mean that you must provide health care.** But, if health problems develop in your workplace, you are expected to get medical help to treat them and their causes.

To fulfill the above requirements consider the following:

- You should have an emergency medical procedure for handling injuries, transporting ill or injured workers and notifying medical facilities with a minimum of confusion. Posting emergency numbers is a good idea.

- Survey the medical facilities near your place of business and make arrangements for them to handle routine and emergency cases. Cooperative agreements could possibly be made with nearby larger plants that have medical personnel and/or facilities onsite.

- You should have a procedure for reporting injuries and illnesses that is understood by all employees.

- If your business is remote from medical facilities, you are required to ensure that a person or persons be adequately trained and available to render first-aid. Adequate first-aid supplies must be readily available for emergency use. Arrangements for this training can be made through your local Red Cross Chapter, your insurance carrier, your local safety council and others.

- You should check battery charging stations, maintenance operations, laboratories, heating and ventilating operations and any corrosive materials areas to make sure you have the required eye wash facilities and showers.

- Consider retaining a local doctor or an occupational health nurse on a part-time or as-used basis to advise you in your medical and first-aid planning.

POINT FOUR:
Training for Employees, Supervisors and Managers

An effective accident prevention program requires proper job performance from everyone in the workplace.

As an owner or manager, you must ensure that all employees know about the materials and equipment they work with, what known hazards are in the operation, and how you are controlling the hazards.

Each employee needs to know the following:

- No employee is expected to undertake a job until he or she has received job instructions on how to do it properly and has been authorized to perform that job.

- No employee should undertake a job that appears unsafe.

You may be able to combine safety and health training with other training that you do, depending upon the kinds of potential and existing hazards that you have. With training, the "proof is in the pudding" in that the result that you want is everyone knowing what they need to know to keep themselves and their fellow workers safe and healthy.

Here are some actions to take:

- Ask your state consultant to recommend training for your worksite. The consultant may be able to do some of the training while he or she is there.

- Make sure you have trained your employees on every potential hazard that they could be exposed to and how to protect themselves. Then verify that they really understand what you taught them.

- Pay particular attention to your new employees and to old employees who are moving to new jobs. Because they are learning new operations, they are more likely to get hurt.

- Make sure that you train your supervisors to know all the hazards that face the people they supervise and how to reinforce training with quick reminders and refreshers, and with disciplinary action if necessary. Verify that they know what is expected of them.

- Make sure that you and your top management staff understand all of your responsibilities and how to hold subordinate supervisory employees accountable for theirs.

Documenting Your Activites

Document your activities in all elements of the Four-Point Workplace Program. Essential records, including those legally required for workers' compensation, insurance audits and government inspections **must** be maintained as long as the actual need exists. Keeping records of your activities, such as policy statements, training sessions for management and employees safety and health meetings held, information distributed to employees, and medical arrangements made, is greatly encouraged. Maintaining essential records also will aid:

(1) the demonstration of sound business management as supporting proof for credit applications, for showing "good faith" in reducing any proposed penalties from OSHA inspections, for insurance audits and others; and

(2) the efficient review of your current safety and health activities for better control of your operations and to plan improvements.

Safety and Health Recordkeeping

Records of sales, costs, profits and losses are essential to all successful businesses They enable the owner or manager to learn from experience and to make corrections for future operations. Records of accidents, related injuries, illnesses and property losses can serve the same purpose, if they are used the same way. The sole purpose of OSHA recordkeeping is to store factual information about certain accidents that have happened. When the facts have been determined, causes can often be identified, and control procedures can be instituted to prevent a similar occurrence from happening.

Injury/Illness Records

There are injury/illness recordkeeping requirements under OSHA that require a minimum of paperwork. These records will provide you with one measure for evaluating the success of your safety and health activities. Success would generally mean a lack of, or a reduced number of, employee injuries or illnesses during a calendar year.

There are five important steps required by the OSHA recordkeeping system:

1. Obtain a report on every injury requiring medical treatment (other than first aid)

2. Record each injury on the *OSHA Form No. 200* according to the instructions provided

3. Prepare a supplementary record of occupational injuries and illnesses for recordable cases either on *OSHA Form No. 101 or* on workers' compensation reports giving the same information.

4. Every year, prepare the annual summary (OSHA Form No. 200); post it no later than February 1, and keep it posted until March 1 (Next to the OSHA workplace poster is a good place to post it.)

5. Retain these records for at least five years.

During the year, periodically review the records to see where injuries are occurring. Look for any patterns or repeat situations. These records can help you to identify those high risk areas to which you should direct your immediate attention.

Since the basic OSHA records include only injuries and illnesses, you might consider expanding your own system to include all incidents, including those where no injury or illness resulted, if you think such information would assist you in pinpointing unsafe conditions and/or procedures. Safety councils, insurance carriers and others can assist you in instituting such a system.

Injury/illness recordkeeping makes sense, and we recommend this practice to all employers. You are not required to keep records under the OSHA injury/illness recordkeeping system if you employ 10 or fewer employees, however.

Regardless of the number of employees you have, you may be selected by the Federal Bureau of Labor Statistics (BLS) or a related state agency for inclusion in an annual sample survey. You will receive a letter directly from the agency with instructions, if you are selected.

Exposure Records and Others

The injury/illness records may not be the only records you will need to maintain. Certain OSHA standards that deal with toxic substances and hazardous exposures require records on the exposure of employees, physical examination reports, employment records, etc.

As you work on identifying hazards, you will be able to determine whether these requirements apply to your situation on a case-by-case basis. We mention it here so that you will be aware of these records and that, if required, they should be used with your control procedures and with your self-inspection activity. They should not be considered merely as bookkeeping.

III. STARTING YOUR VOLUNTARY ACTIVITY

You can use this basic action plan to get started on your program.

To avoid confusion, we need to explain that this action plan is not organized solely in the order of the four points we described in Section II. Rather, it provides the most direct route to getting yourself organized to complete your Four-Point Program.

When you have completed your action plan, your activity should be organized around the four points described in Section II.

Decide to Start Now

The time to start your safety and health program is now. You have a better picture of what constitutes a good safety and health program. Now you can address the practical concerns of putting these elements together and coming up with a program to suit <u>your</u> workplace.

Presumably you have been taking notes for your action plan as you went through the preceding description of the Four-Point Program. You should be ready now to decide exactly what you want to accomplish, and to determine what steps are necessary to achieve your goals. Then you will plan out how and when each step will be done, and who will do it.

Your plan should consider your company's immediate needs, and provide for ongoing, "long-lasting" worker protection. Once your plan is designed, it is important to follow through and use it in the workplace. You will then have a program to anticipate, identify and eliminate conditions or practices which could result in injuries and illnesses.

If you have difficulty in deciding where to begin, a phone call to your state consultation program will get you the assistance you need. A state consultant will survey your workplace for existing or potential hazards. Then, if you request it, he or she will determine what you need to make your safety and health program effective. The consultant will work with you to develop a plan for making these improvements, and to establish procedures for making sure that your program stays effective.

Whether you choose to work with a consultant or to develop your program yourself, there are other publications similar to this (available from a state consultation program or from OSHA) which spell out in greater detail the steps you can take to create an effective safety and health program for your workplace. The rewards for your efforts will be a workplace with a high level of efficiency and productivity, and a low level of loss and injury.

Designating Responsibility

You must decide who in your company is the most appropriate person to manage your safety and health program. Who can be sure that the program will become an integral part of the business? In many cases it will be you, the owner. Sometimes it will be the plant manager or a key supervisor. It could even be an engineer, personnel specialists or other staff member.

Whoever you choose should be as committed to workplace safety and health as you are, who has the time to devote to developing and managing the program, and who is willing to take on the responsibility and accountability that goes with operating an effective program. The success of your program hinges on the success of the individual you choose, and he or she cannot succeed without your full cooperation and support. Remember, though, that even when you appoint someone as your safety manager and delegate the authority to manage the program, the ultimate responsibility for safety and health in <u>your</u> workplace rests on <u>you</u>.

Having made your selection of a safety and health manager, you or your designee and any others you choose will need to take (or be sure you have already taken) the following actions.

Get Some Help on the Details

First, you may need to catch up with all the changes made since the Act became law in December 1970. For example, the federal law contains provisions for allowing a state to develop and operate its own occupational safety and health program in place of the federal OSHA program. It is possible that the regulatory aspect of the law (setting of mandatory minimum standards and conducting inspections of workplaces) is now being operated by your state government.

You need to know which level of government has current jurisdiction over your establishment. If you are not sure of this, telephone the nearest OSHA Area Office to find out. (The locations are listed on page 45.)

Second, you will need certain federal OSHA publications (or comparable state publications) for use in your safety and health activities.

1. OSHA workplace poster (Job Safety and Health Protection) -- You must have the federal or state OSHA poster displayed in your workplace.

2. Standards that apply to your operations - You need these standards for reference material in your business. These are the regulations OSHA uses when inspecting for compliance with the Act. These standards are the baseline for your own inspections and are useful in determining what specific changes need to be made when hazards are identified. Most businesses come under OSHA's General Industry Standards, but if you are involved with construction or maritime operations you will need the standards that apply to these classifications. (In states with OSHA programs, use the appropriate state standards.)

3. Recordkeeping Requirements and the necessary forms - you need these if you have 11 or more employees. These forms are not too different from other information forms you have been keeping for workers' compensation and other records.

4. Occupational Safety and Health Act - you may want this for your own information and reference in the future.

Clean Up Your Place of Business

Poor housekeeping is a major contributor to low morale and sloppy work in general, even if it is not usually the cause of major accidents. Most safety action programs start with an intensive clean-up campaign in all areas of business.

Get rid of rubbish that has collected; make sure proper containers are provided; see that flammables are properly stored; make sure that exits are not blocked; if necessary, mark aisles and passageways; provide adequate lighting, etc.

Get everyone involved and impress upon them exactly what it is you want to do to make your workplace safer, more healthful and more efficient.

Start Gathering Specific Facts About Your Situation

Before you make any changes in your safety and health operations, you will want to gather as much information as possible about the current conditions at your workplace and about business practices that are already part of your safety and health program. This information can help you identify any workplace problems and see what's involved in solving them.

The assessment of your workplace should be conducted by the person responsible for the safety and health program and/or a professional safety and health consultant. It consists of two major activities.

The first is a comprehensive safety and health survey of your entire facility, designed to identify any existing or potential safety and health hazards. This initial survey should focus on evaluating workplace conditions with respect to safety and health regulations and generally recognized safe and healthful work practices. It should include checking on the use of any hazardous materials, observing employee work habits and practices, and discussing safety and health problems with employees. See Section IV, Self-Inspection Check Lists, to help you get a good start on creating this initial survey.

The second major activity is an assessment of your existing safety and health program to identify areas that may be working well and those that may need improvement. You will want to gather together as much information as you can that relates to the safety and health management of your workplace. You should include the following in this review:

- **Safety and Health Activities** -- Examine current ongoing activities as well as those tried previously, company policy statements, rules (both work and safety), guidelines for proper work practices and procedures and records of training programs.

- **Equipment** -- Make a list of your major equipment, principal operations and the locations of each. Special attention should be given to inspection schedules, maintenance activities and plant and office layouts.

- **Employees' capabilities** -- Make an alphabetical list of all employees, showing the date they were hired, what their jobs are and what experience and training they have had. Special attention should be given to new employees and to employees with handicaps.

- **Accident and Injury/Illness history** -- Take a look at your first-aid cases, workers' compensation insurance payments, and workers' compensation awards, if any. Review any losses. Determine how your insurance rate compares with others in your group. Special attention should be given to recurring accidents, types of injuries, etc.

With whatever facts you have been able to assemble, take a quick look to see if any major problem areas can be identified. You would be looking for such things as interruptions in your normal operations, too many employees taking too much time off, too many damaged products, etc. General assistance in this kind of problem identification can often be obtained from compensation carriers, local safety councils, state agencies, your major suppliers and even, perhaps, a competitor.

If there is a major problem, see what can be done to solve it. Once a problem is identified, you can work on the corrective action or a plan for controlling the problem. Take immediate action at this point and make a record of what you have done. Don't become overly involved in looking for major problem areas during this fact-finding stage. Remember that no one hazardous situation causes all of your safety and health problems. Therefore, it is likely that no single action will greatly improve your safety and health program.

If you have found no major problem at this point, don't stop here. Now it is time to develop a comprehensive safety and health program that meets your needs and those of your employees. This will make it more difficult for major problems to crop up in the future.

Establish Your Four-Point Safety and Health Program

The success of any workplace safety and health program depends on careful planning. This means that you have taken time to think through what you want to accomplish, and you may even have a general idea of what it will take to accomplish your goals. Based on that, you can design a step by step process that will take you from the idea stage to having a fully effective operation.

The most effective way to create the safest possible workplace for you and your employees is to institute the Four-Point Program discussed in Section II of this handbook. Use the guidance presented in Section II to help you develop your program.

Establish your **Management Commitment** and **Involve Your Employees**. No Safety and Health Program will work, especially in the long term, without this commitment and involvement. You should have already taken the first step by designating the person who will be responsible for your program.

Be certain that your employees are as widely involved in the program as possible from the beginning. They are the people most in contact with the potential and actual safety and health hazards at your worksite. They will have constructive input into the development of your safety and health program. Its ultimate success will depend upon their support -- support that will be more forthcoming for a program in which they have had a meaningful input.

Make sure your program assigns responsibility and accountability to all employees in your organization. A good safety and health program makes it clear that each and every employee from you through the supervisory levels to the line worker is responsible for his or her part of the program. You will make their safety and health duties clear and each of them will be held accountable for his or her safety and health related duties.

Refer to the recommended actions to take on page 9 in Section II. These will help start your program off on the right track. You will be building the foundation for a successful safety and health program.

Establish and regularly conduct your **Worksite Analysis**. You cannot have a successful Safety and Health Program if it has not identified all the hazards and potential hazards present in your workplace. This is an ongoing process that includes routine self-inspections if you are to know where probable hazards exist and whether or not they are under control.

Create the systems and procedures necessary to **Prevent and Control the Hazards** that have been identified through your worksite analysis. These control procedures will be your basic means for preventing accidents. The OSHA standards that have been promulgated can be of great assistance to you since they address controls in order of effectiveness and preference. Where no standard exists, creative problem solving and consultant resources should help you create effective controls. The basic formula OSHA follows is, in order of preference:

1. Eliminating the hazard from the machine, the method, the material or the plant structure.
2. Abating the hazard by limiting exposure or controlling it at its source.
3. Training personnel to be aware of the hazard and to follow safe work procedures to avoid it.
4. Prescribing **personal protective equipment** for protecting employees against the hazard.

Be sure to establish and provide ongoing **Training for Employees, Supervisors and Managers**. This should ensure that everyone at your worksite will know about the hazards that exist and how to control them.

Each of these points is crucial if you want to establish a safe and healthy workplace for you and your employees. They also work together to reinforce each other, thereby making it more difficult for accidents to occur and for work-related health problems to develop.

Develop and Implement Your Action Plan

Develop an action plan to help you build your safety and health program around the four points discussed above. It can serve as a "road map" to get your program from where it is now to where you want it to be. It tells you what has to be done, the logical order in which to do it, who is responsible, and perhaps most important, where you want to be when you finish. It is a specific description of problems and solutions, but it is not ironclad -- it can and should be changed to correspond with changes in the workplace.

A good action plan has two parts:

1. an overall list of the major changes or improvements that are needed to make your safety and health program effective. Assign each item a priority and a target date for completion, and identify the person who will monitor or direct each action.

2. a specific plan on how to implement each major change or improvement. Here, you would write out what you wanted to accomplish, the steps required, who would be assigned to do what, and when you plan to be finished. This part of the action plan will help you keep track of program improvements so that details do not slip through the cracks. When several improvements are being made at once, it is easy to overlook something that may be an important prerequisite for your next action.

A worksheet that may help you design an overall action plan and describe specific action steps appears at the end of this section.

Once the plan has been established, you must begin putting it into action. This begins with the item that has been assigned the highest priority. Check to make sure it is realistic and manageable, then address the steps you have written out for that item. This detailed description of the steps required will help you keep track of the development that is taking place. Keep in mind that you can, of course, work on more than one item at a time, and that the priorities may change as other needs are identified or as your company's resources change.

Open communication with your employees is crucial to the success of your efforts. Their cooperation depends on understanding what the safety and health program is all about, why it is important to them, and how it affects their work. The more you do to involve them in the changes you are making, the smoother your transition will be.

By putting your action plan into operation at your workplace, you will have taken a major step toward having an effective safety and health program. **Remember, a safety and health program is a plan put into practice.** You can keep your program on track by periodically checking its progress and by calling on a state consultant when you need assistance.

Any good management system requires a periodic review to make sure that the system is operating as intended. Every so often (quarterly, semi-annually or annually) you should take a careful look at each critical component in your safety and health program to determine what is working well and what changes are needed. Your consultant can assist you in this area as well. When you identify improvements that should be made, you have the basis for new safety and health objectives for the coming year. Developing new action plans for those improvements will help you to continue to progress toward an effective safety and health program. That, in turn, will reduce your safety and health risks and increase efficiency and profit.

Remember, however, that it is also important to document your activities. The only way you can evaluate the success of your safety and health program is to have the documentation available to tell you what you have done, to assess how it has worked and to provide you with guidance on how you can make it work even better.

Technical assistance may be available to you as a small business owner or manager through your insurance carrier, your fellow business-people, suppliers of your durable equipment and raw materials, the local safety council and many local, state and federal agencies, including the state consultation programs and OSHA Area Offices. You may even find help in the yellow pages of your telephone directory which will give you the names of many companies which specialize in items and services relating to safety, health and fire prevention. (Refer to page 43--Multiple Sources of Help.)

Establishing a quality Safety and Health Program at your place of business will take some time and involve some resources. However, you should be pleasantly surprised with the results. You will have happier employees because they will know you are committed to their safety and health on the job. You will probably save money through increased productivity and reduced workers' compensation insurance costs. You will find increased respect in your community. The rewards you receive will surely exceed the cost of your investment in safety and health protection.

IV. SELF-INSPECTION

The most widely accepted way to identify hazards is to conduct safety and health inspections. The only way you can be certain of the actual situation is for you to look at it from time to time.

Make a Self-Inspection of Your Business

Begin a program of self-inspection in your own workplace. Self-inspection is a must if you are to know where probable hazards exist and whether they are under control.

Later in this Section, you will find checklists designed to assist you in this fact-finding. They will give you some indication of where you should begin action to make your business safer and more healthful for all of your employees.

These checklists are by no means all-inclusive. You may wish to add to them or delete portions that do not apply to your business. Consider carefully each item as you come to it and then make your decision.

Don't spend time with items that obviously have no application to your business. Make sure each item is seen by you or your designee, and leave nothing to memory or chance. Write down what you see, or don't see, and what you think you should do about it.

When you have completed the checklists, add this material to your injury information, your employee information, and your process and equipment information. You will now possess may facts that will help you determine what problems exist. Then, if you use the OSHA standards in your problem-solving process, it will be much easier for you to determine the action needed to solve these problems.

Once the hazards have been identified, you can institute the control procedures described in Section III and establish your four-point safety and health program.

Technical assistance in self-inspection may be available to you as a small business owner or manager through your insurance carrier, the local safety council and many local, state, and federal agencies, including the state consultation programs and OSHA Area Offices. Additional checklists are available from the National Safety Council, trade associations, insurance companies and other similar service organizations. (Refer to page 43--Multiple Sources of Help.)

Self-Inspection Scope

The scope of your self-inspections should include the following:

- **Processing, Receiving, Shipping and Storage**--equipment, job planning, layout, heights, floor loads, projection of materials, materials-handling and storage methods.

- **Building and Grounds Conditions**--floors, walls, ceilings, exits, stairs, walkways, ramps, platforms, driveways, aisles.

- **Housekeeping Program**--waste disposal, tools, objects, materials, leakage and spillage, cleaning methods, schedules, work areas, remote areas, storage areas.

- **Electricity**--equipment, switches, breakers, fuses, switch-boxes, junctions, special fixtures, circuits, insulation, extensions, tools, motors, grounding, NEC compliance.

- **Lighting**--type, intensity, controls, conditions, diffusion, location, glare and shadow control.

- **Heating and Ventilation**--type, effectiveness, temperature, humidity, controls, natural and artificial ventilation and exhausting.

- **Machinery**--points of operation, flywheels, gears, shafts, pulleys, key ways, belts, couplings, sprockets chains, frames, controls, lighting for tools and equipment, brakes, exhausting, feeding, oiling, adjusting, maintenance, lock out, grounding, work space, location, purchasing standards

- **Personnel**--training, experience, methods of checking machines before use, type clothing, personal protective equipment use of guards, tool storage, work practices, method of cleaning, oiling, or adjusting machinery.

- **Hand and Power Tools**--purchasing standards, inspection, storage, repair, types, maintenance, grounding, use and handling.

- **Chemicals**--storage, handling, transportation, spills, disposals, amounts used, toxicity or other harmful effects, warning signs, supervision, training, protective clothing and equipment.

- **Fire Prevention**--extinguishers, alarms, sprinklers, smoking rules, exits, personnel assigned, separation of flammable materials and dangerous operations, explosive-proof fixtures in hazardous locations, waste disposal.

- **Maintenance**--regularity, effectiveness, training of personnel, materials and equipment used, records maintained, method of locking out machinery, general methods.

- **Personal Protective Equipment**--type, size, maintenance, repair, storage, assignment of responsibility, purchasing methods, standards observed, training in care and use, rules of use, method of assignment

SELF-INSPECTION CHECK LISTS

These check lists are by no means all-inclusive. You should add to them or delete portions or items that do not apply to your operations. However, carefully consider each item as you come to it and then make your decision.

EMPLOYER POSTING

- ☐ Is the required OSHA workplace poster displayed in a prominent location where all employees are likely to see it?
- ☐ Are emergency telephone numbers posted where they can be readily found in case of emergency?
- ☐ Where employees may be exposed to any toxic substances or harmful physical agents, has appropriate information concerning employee access to medical and exposure records, and "Material Safety Data Sheets," etc., been posted or otherwise made readily available to affected employees?
- ☐ Are signs concerning "Exiting from buildings," room capacities, floor loading, exposures to x-ray, microwave, or other harmful radiation or substances posted where appropriate?
- ☐ Is the Summary of Occupational Illnesses and Injuries posted in the month of February?

RECORDKEEPING

- ☐ Are all occupational injury or illnesses, except minor injuries requiring only first aid, being recorded as required on the OSHA 200 Log?
- ☐ Are employee medical records and records of employee exposure to hazardous substances or harmful physical agents up-to-date?
- ☐ Have arrangements been made to maintain required records for the legal period of time for each specific type record? (Some records must be maintained for at least 40 years.)
- ☐ Are operating permits and records up-to-date for such items as elevators, air pressure tanks, liquefied petroleum gas tanks, etc.?

SAFETY AND HEALTH PROGRAM

- ☐ Do you have an active safety and health program in operation?
- ☐ Is one person clearly responsible for the overall activities of the safety and health program?
- ☐ Do you have a safety committee or group made up of management and labor representatives that meet regularly and report in writing on its activities?
- ☐ Do you have a working procedure for handling in-house employee complaints regarding safety and health?
- ☐ Are you keeping your employees advised of the successful effort and accomplishments you and/or your safety committee have made in assuring they will have a workplace that is safe and healthful?

MEDICAL SERVICES AND FIRST AID

- ☐ Do you require each employee to have a pre-employment physical examination?
- ☐ Is there a hospital, clinic, or infirmary for medical care in proximity of your workplace?
- ☐ If medical and first aid facilities are not in proximity of your workplace, is at least one employee on each shift currently qualified to render first aid?
- ☐ Are medical personnel readily available for advice and consultation on matters of employees' health?
- ☐ Are emergency phone numbers posted?
- ☐ Are first aid kits easily accessible to each work area, with necessary supplies available, periodically inspected and replenished as needed?
- ☐ Have first aid kit supplies been approved by a physician, indicating that they are adequate for a particular area or operation?
- ☐ Are means provided for quick drenching or flushing of the eyes and body in areas where corrosive liquids or materials are handled?

FIRE PROTECTION

- ☐ Is your local fire department well acquainted with your facilities, its location and specific hazards?
- ☐ If you have a fire alarm system, is it certified as required?
- ☐ If you have a fire alarm system, is it tested at least annually?
- ☐ If you have interior stand pipes and valves, are they inspected regularly?
- ☐ If you have outside private fire hydrants, are they flushed at least once a year and on a routine preventive maintenance schedule?
- ☐ Are fire doors and shutters in good operating condition?
- ☐ Are fire doors and shutters unobstructed and protected against obstructions, including their counterweights?
- ☐ Are fire door and shutter fusable links in place?
- ☐ Are automatic sprinkler system water control valves, air and water pressure checked weekly/periodically as required?
- ☐ Is the maintenance of automatic sprinkler systems assigned to responsible persons or to a sprinkler contractor?
- ☐ Are sprinkler heads protected by metal guards, when exposed to physical damage?
- ☐ Is proper clearance maintained below sprinkler heads?
- ☐ Are portable fire extinguishers provided in adequate number and type?
- ☐ Are fire extinguishers mounted in readily accessible locations?
- ☐ Are fire extinguishers recharged regularly and noted on the inspection tag?
- ☐ Are employees periodically instructed in the use of extinguishers and fire protection procedures?

PERSONAL PROTECTIVE EQUIPMENT AND CLOTHING

- ☐ Are protective goggles or face shields provided and worn where there is any danger of flying particles or corrosive materials?
- ☐ Are approved safety glasses required to be worn at all times in areas where there is a risk of eye injuries such as punctures abrasions, contusions or burns?
- ☐ Are employees who need corrective lenses (glasses or contacts) in working environments having harmful exposures required to wear only approved safety glasses, protective goggles or use other medically approved precautionary procedures
- ☐ Are protective gloves, aprons, shields, or other means provided against cuts, corrosive liquids and chemicals?
- ☐ Are hard hats provided and worn where danger of falling objects exists?
- ☐ Are hard hats inspected periodically for damage to the shell and suspension system?
- ☐ Is appropriate foot protection required where there is the risk of foot injuries from hot, corrosive, poisonous substances, falling objects, crushing or penetrating actions?
- ☐ Are approved respirators provided for regular or emergency use where needed?
- ☐ Is all protective equipment maintained in a sanitary condition and ready for use?
- ☐ Do you have eye wash facilities and a quick Drench Shower within the work area where employees are exposed to injurious corrosive materials?
- ☐ Where special equipment is needed for electrical workers, is it available?
- ☐ Where lunches are eaten on the premises, are they eaten in areas where there is no exposure to toxic materials or other health hazards?
- ☐ Is protection against the effects of occupational noise exposure provided when sound levels exceed those of the OSHA noise standard?
- ☐ Are adequate work procedures, protective clothing and equipment provided and used when cleaning up spilled toxic or otherwise hazardous materials or liquids?

GENERAL WORK ENVIRONMENT

- ☐ Are all worksites clean and orderly?
- ☐ Are work surfaces kept dry or appropriate means taken to assure the surfaces are slip-resistant?
- ☐ Are all spilled materials or liquids cleaned up immediately?
- ☐ Is combustible scrap, debris and waste stored safely and removed from the worksite promptly?
- ☐ Are accumulations of combustible dust routinely removed from elevated surfaces including the overhead structure of buildings, etc.?
- ☐ Is combustible dust cleaned up with a vacuum system to prevent the dust going into suspension?
- ☐ Is metallic or conductive dust prevented from entering or accumulating on or around electrical enclosures or equipment?
- ☐ Are covered metal waste cans used for oily and paintsoaked waste?
- ☐ Are all oil and gas fired devices equipped with flame failure controls that will prevent flow of fuel if pilots or main burners are not working?
- ☐ Are paint spray booths, dip tanks, etc., cleaned regularly?
- ☐ Are the minimum number of toilets and washing facilities provided?
- ☐ Are all toilets and washing facilities clean and sanitary?
- ☐ Are all work areas adequately illuminated?
- ☐ Are pits and floor openings covered or otherwise guarded?

WALKWAYS

- ☐ Are aisles and passageways kept clear?
- ☐ Are aisles and walkways marked as appropriate?
- ☐ Are wet surfaces covered with non-slip materials?
- ☐ Are holes in the floor, sidewalk or other walking surface repaired properly, covered or otherwise made safe?
- ☐ Is there safe clearance for walking in aisles where motorized or mechanical handling equipment is operating?
- ☐ Are materials or equipment stored in such a way that sharp projectives will not interfere with the walkway?
- ☐ Are spilled materials cleaned up immediately?
- ☐ Are changes of direction or elevations readily identifiable?
- ☐ Are aisles or walkways that pass near moving or operating machinery, welding operations or similar operations arranged so employees will not be subjected to potential hazards?
- ☐ Is adequate headroom provided for the entire length of any aisle or walkway?
- ☐ Are standard guardrails provided wherever aisle or walkway surfaces are elevated more than 30 inches above any adjacent floor or the ground?
- ☐ Are bridges provided over conveyors and similar hazards?

FLOOR AND WALL OPENINGS

- ☐ Are floor openings guarded by a cover, a guardrail, or equivalent on all sides (except at entrance to stairways or ladders)?
- ☐ Are toeboards installed around the edges of permanent floor opening (where persons may pass below the opening)?
- ☐ Are skylight screens of such construction and mounting that they will withstand a load of at least 200 pounds?
- ☐ Is the glass in the windows, doors, glass walls, etc., which are subject to human impact, of sufficient thickness and type for the condition of use?
- ☐ Are grates or similar type covers over floor openings such as floor drains, of such design that foot traffic or rolling equipment will not be affected by the grate spacing?
- ☐ Are unused portions of service pits and pits not actually in use either covered or protected by guardrails or equivalent?
- ☐ Are manhole covers, trench covers and similar covers, plus their supports designed to carry a truck rear axle load of at least 20,000 pounds when located in roadways and subject to vehicle traffic?
- ☐ Are floor or wall openings in fire resistive construction provided with doors or covers compatible with the fire rating of the structure and provided with self closing feature when appropriate?

STAIRS AND STAIRWAYS

- ☐ Are standard stair rails or handrails on all stairways having four or more risers?
- ☐ Are all stairways at least 22 inches wide?
- ☐ Do stairs have at least a 6'6" overhead clearance?
- ☐ Do stairs angle no more than 50 and no less than 30 degrees?
- ☐ Are stairs of hollow-pan type treads and landings filled to noising level with solid material?
- ☐ Are step risers on stairs uniform from top to bottom, with no riser spacing greater than 7½ inches?
- ☐ Are steps on stairs and stairways designed or provided with a surface that renders them slip resistant?
- ☐ Are stairway handrails located between 30 and 34 inches above the leading edge of stair treads?
- ☐ Do stairway handrails have at least 1½ inches of clearance between the handrails and the wall or surface they are mounted on?
- ☐ Are stairway handrails capable of withstanding a load of 200 pounds, applied in any direction?
- ☐ Where stairs or stairways exit directly into any area where vehicles may be operated, are adequate barriers and warnings provided to prevent employees stepping into the path of traffic?
- ☐ Do stairway landings have a dimension measured in the direction of travel, at least equal to the width of the stairway?
- ☐ Is the vertical distance between stairway landings limited to 12 feet or less?

ELEVATED SURFACES

- ☐ Are signs posted, when appropriate, showing the elevated surface load capacity?
- ☐ Are surfaces elevated more than 30 inches above the floor or ground provided with standard guardrails?
- ☐ Are all elevated surfaces (beneath which people or machinery could be exposed to falling objects) provided with standard 4-inch toeboards?
- ☐ Is a permanent means of access and egress provided to elevated storage and work surfaces?
- ☐ Is required headroom provided where necessary?
- ☐ Is material on elevated surfaces piled, stacked or racked in a manner to prevent it from tipping, falling, collapsing, rolling or spreading?
- ☐ Are dock boards or bridge plates used when transferring materials between docks and trucks or rail cars?

EXITING OR EGRESS

- ☐ Are all exits marked with an exit sign and illuminated by a reliable light source?
- ☐ Are the directions to exits, when not immediately apparent, marked with visible signs?
- ☐ Are doors, passageways or stairways, that are neither exits nor access to exits and which could be mistaken for exits, appropriately marked "NOT AN EXIT," "TO BASEMENT," "STOREROOM," etc.?
- ☐ Are exit signs provided with the word "EXIT" in lettering at least 5 inches high and the stroke of the lettering at least ½-inch wide?
- ☐ Are exit doors side-hinged?
- ☐ Are all exits kept free of obstructions?
- ☐ Are at least two means of egress provided from elevated platforms, pits or rooms where the absence of a second exit would increase the risk of injury from hot, poisonous, corrosive, suffocating, flammable, or explosive substances?
- ☐ Are there sufficient exits to permit prompt escape in case of emergency?
- ☐ Are special precautions taken to protect employees during construction and repair operations?
- ☐ Is the number of exits from each floor of a building and the number of exits from the building itself, appropriate for the building occupancy load?
- ☐ Are exit stairways which are required to be separated from other parts of a building, enclosed by at least 2-hour fire-resistive construction in buildings more than four stories in height, and not less than 1-hour fire-resistive constructive elsewhere?
- ☐ Where ramps are used as part of required exiting from a building, is the ramp slope limited to 1 ft. vertical and 12 ft. horizontal?
- ☐ Where exiting will be through frameless glass doors, glass exit doors, storm doors, etc., are the doors fully tempered and meet the safety requirements for human impact?

EXIT DOORS

- ☐ Are doors which are required to serve as exits designed and constructed so that the way of exit travel is obvious and direct?
- ☐ Are windows which could be mistaken for exit doors, made inaccessible by means of barriers or railings?
- ☐ Are exit doors openable from the direction of exit travel without the use of a key or any special knowledge or effort when the building is occupied?
- ☐ Is a revolving, sliding or overhead door prohibited from serving as a required exit door?
- ☐ Where panic hardware is installed on a required exit door, will it allow the door to open by applying a force of 15 pounds or less in the direction of the exit traffic?
- ☐ Are doors on cold storage rooms provided with an inside release mechanism which will release the latch and open the door even if it's padlocked or otherwise locked on the outside?
- ☐ Where exit doors open directly onto any street, alley or other area where vehicles may be operated, are adequate barriers and warnings provided to prevent employees stepping into the path of traffic?
- ☐ Are doors that swing in both directions and are located between rooms where there is frequent traffic, provided with viewing panels in each door?

PORTABLE LADDERS

- ☐ Are all ladders maintained in good condition, joints between steps and side rails tight, all hardware and fittings securely attached and moveable parts operating freely without binding or undue play?
- ☐ Are non-slip safety feet provided on each ladder?
- ☐ Are non-slip safety feet provided on each metal or rung ladder?
- ☐ Are ladder rungs and steps free of grease and oil?
- ☐ Is it prohibited to place a ladder in front of doors opening toward the ladder except when the door is blocked open, locked or guarded?
- ☐ Is it prohibited to place ladders on boxes, barrels, or other unstable bases to obtain additional height?
- ☐ Are employees instructed to face the ladder when ascending or descending?
- ☐ Are employees prohibited from using ladders that are broken, missing steps, rungs, or cleats, broken side rails or other faulty equipment?
- ☐ Are employees instructed not to use the top step of ordinary stepladders as a step?
- ☐ When portable rung ladders are used to gain access to elevated platforms, roofs, etc., does the ladder always extend at least 3 feet above the elevated surface?
- ☐ Is it required that when portable rung or cleat type ladders are used, the base is so placed that slipping will not occur, or it is lashed or otherwise held in place?
- ☐ Are portable metal ladders legibly marked with signs reading "CAUTION" - Do Not Use Around Electrical Equipment" or equivalent wording?
- ☐ Are employees prohibited from using ladders as guys, braces, skids, gin poles, or for other than their intended purposes?
- ☐ Are employees instructed to only adjust extension ladders while standing at a base (not while standing on the ladder or from a position above the ladder)?

- ☐ Are metal ladders inspected for damage?
- ☐ Are the rungs of ladders uniformly spaced at 12 inches, center to center?

HAND TOOLS AND EQUIPMENT

- ☐ Are all tools and equipment (both company and employee-owned) used by employees at their workplace in good condition?
- ☐ Are hand tools such as chisels, punches, etc. which develop mushroomed heads during use, reconditioned or replaced as necessary?
- ☐ Are broken or fractured handles on hammers, axes and similar equipment replaced promptly?
- ☐ Are worn or bent wrenches replaced regularly?
- ☐ Are appropriate handles used on files and similar tools?
- ☐ Are employees made aware of the hazards caused by faulty or improperly used hand tools?
- ☐ Are appropriate safety glasses, face shields, etc. used while using hand tools or equipment which might produce flying materials or be subject to breakage?
- ☐ Are jacks checked periodically to assure they are in good operating condition?
- ☐ Are tool handles wedged tightly in the head of all tools?
- ☐ Are tool cutting edges kept sharp so the tool will move smoothly without binding or skipping?
- ☐ Are tools stored in dry, secure location where they won't be tampered with?
- ☐ Is eye and face protection used when driving hardened or tempered spuds or nails?

PORTABLE (POWER OPERATED) TOOLS AND EQUIPMENT

- ☐ Are grinders, saws and similar equipment provided with appropriate safety guards?
- ☐ Are power tools used with the correct shield, guard, or attachment recommended by the manufacturer?
- ☐ Are portable circular saws equipped with guards above and below the base shoe?
- ☐ Are circular saw guards checked to assure they are not wedged up, thus leaving the lower portion of the blade unguarded?
- ☐ Are rotating or moving parts of equipment guarded to prevent physical contact?
- ☐ Are all cord-connected, electrically-operated tools and equipment effectively grounded or of the approved double insulated type?
- ☐ Are effective guards in place over belts, pulleys, chains, sprockets, on equipment such as concrete mixers, air compressors, etc.?
- ☐ Are portable fans provided with full guards or screens having openings ½ inch or less?
- ☐ Is hoisting equipment available and used for lifting heavy objects, and are hoist ratings and characteristics appropriate for the task?
- ☐ Are ground-fault circuit interrupters provided on all temporary electrical 15 and 20 ampere circuits, used during periods of construction?
- ☐ Are pneumatic and hydraulic hoses on power-operated tools checked regularly for deterioration or damage?

ABRASIVE WHEEL EQUIPMENT-GRINDERS

- ☐ Is the work rest used and kept adjusted to within ⅛ inch of the wheel?
- ☐ Is the adjustable tongue on the top side of the grinder used and kept adjusted to within ¼ inch of the wheel?
- ☐ Do side guards cover the spindle, nut, and flange and 75 percent of the wheel diameter?
- ☐ Are bench and pedestal grinders permanently mounted?
- ☐ Are goggles or face shields always worn when grinding?
- ☐ Is the maximum RPM rating of each abrasive wheel compatible with the RPM rating of the grinder motor?
- ☐ Are fixed or permanently mounted grinders connected to their electrical supply system with metallic conduit or other permanent wiring method?
- ☐ Does each grinder have an individual on and off control switch?
- ☐ Is each electrically operated grinder effectively grounded?
- ☐ Before new abrasive wheels are mounted, are they visually inspected and ring tested?
- ☐ Are dust collectors and powered exhausts provided on grinders used in operations that produce large amounts of dust?
- ☐ Are splash guards mounted on grinders that use coolant to prevent the coolant reaching employees?
- ☐ Is cleanliness maintained around grinders?

POWDER ACTUATED TOOLS

- ☐ Are employees who operate powder-actuated tools trained in their use and carry a valid operators card?
- ☐ Is each powder-actuated tool stored in its own locked container when not being used?

- ☐ Is a sign at least 7 inches by 10 inches with bold face type reading "POWDER-ACTUATED TOOL IN USE" conspicuously posted when the tool is being used?
- ☐ Are powder-actuated tools left unloaded until they are actually ready to be used?
- ☐ Are powder-actuated tools inspected for obstructions or defects each day before use?
- ☐ Do powder-actuated tool operators have and use appropriate personal protective equipment such as hard hats, safety goggles, safety shoes and ear protectors?

MACHINE GUARDING

- ☐ Is there a training program to instruct employees on safe methods of machine operation?
- ☐ Is there adequate supervision to ensure that employees are following safe machine operating procedures?
- ☐ Is there a regular program of safety inspection of machinery and equipment?
- ☐ Is all machinery and equipment kept clean and properly maintained?
- ☐ Is sufficient clearance provided around and between machines to allow for safe operations, set up and servicing, material handling and waste removal?
- ☐ Is equipment and machinery securely placed and anchored, when necessary to prevent tipping or other movement that could result in personal injury?
- ☐ Is there a power shut-off switch within reach of the operator's position at each machine?
- ☐ Can electric power to each machine be locked out for maintenance, repair, or security?
- ☐ Are the noncurrent-carrying metal parts of electrically operated machines bonded and grounded?
- ☐ Are foot-operated-switches guarded or arranged to prevent accidental actuation by personnel or falling objects?
- ☐ Are manually operated valves and switches controlling the operation of equipment and machines clearly identified and readily accessible?
- ☐ Are all emergency stop buttons colored red?
- ☐ Are all pulleys and belts that are within 7 feet of the floor or working level properly guarded?
- ☐ Are all moving chains and gears properly guarded?
- ☐ Are splash guards mounted on machines that use coolant to prevent the coolant from reaching employees?
- ☐ Are methods provided to protect the operator and other employees in the machine area from hazards created at the point of operation, ingoing nip points, rotating parts, flying chips, and sparks?
- ☐ Are machinery guards secure and so arranged that they do not offer a hazard in their use?
- ☐ If special handtools are used for placing and removing material, do they protect the operator's hands?
- ☐ Are revolving drums, barrels, and containers required to be guarded by an enclosure that is interlocked with the drive mechanism, so that revolution cannot occur unless the guard enclosures is in place, so guarded?
- ☐ Do arbors and mandrels have firm and secure bearings and are they free from play?
- ☐ Are provisions made to prevent machines from automatically starting when power is restored after a power failure or shutdown?
- ☐ Are machines constructed so as to be free from excessive vibration when the largest size tool is mounted and run at full speed?
- ☐ If machinery is cleaned with compressed air, is air pressure controlled and personal protective equipment or other safeguards utilized to protect operators and other workers from eye and body injury?
- ☐ Are fan blades protected with a guard having openings no larger than ½ inch, when operating within 7 feet of the floor?
- ☐ Are saws used for ripping, equipped with anti-kick back devices and spreaders?
- ☐ Are radial arm saws so arranged that the cutting head will gently return to the back of the table when released?

LOCKOUT BLOCKOUT PROCEDURES

- ☐ Is all machinery or equipment capable of movement required to be de-energized or disengaged and blocked or locked-out during cleaning, servicing, adjusting or setting up operations, whenever required?
- ☐ Where the power disconnecting means for equipment does not also disconnect the electrical control circuit:

  Are the appropriate electrical enclosures identified?

  Is means provided to assure the control circuit can also be disconnected and locked-out?
- ☐ Is the locking-out of control circuits in lieu of locking-out main power disconnects prohibited?
- ☐ Are all equipment control valve handles provided with a means for locking-out?
- ☐ Does the lock-out procedure require that stored energy (mechanical, hydraulic, air, etc.) be released or blocked before equipment is locked-out for repairs?
- ☐ Are appropriate employees provided with individually keyed personal safety locks?
- ☐ Are employees required to keep personal control of their key(s) while they have safety locks in use?
- ☐ Is it required that only the employee exposed to the hazard, place or remove the safety lock?
- ☐ Is it required that employees check the safety of the lock-out by attempting a start up after making sure no one is exposed?

- ☐ Are employees instructed to always push the control circuit stop button prior to re-energizing the main power switch?
- ☐ Is there a means provided to identify any or all employees who are working on locked-out equipment by their locks or accompanying tags?
- ☐ Are a sufficient number of accident preventive signs or tags and safety padlocks provided for any reasonably foreseeable repair emergency?
- ☐ When machine operations, configuration or size requires the operator to leave his or her control station to install tools or perform other operations, and that part of the machine could move if accidentally activitated, is such element required to be separately locked or blocked out?
- ☐ In the event that equipment or lines cannot be shut down, locked-out and tagged, is a safe job procedure established and rigidly followed?

WELDING, CUTTING AND BRAZING

- ☐ Are only authorized and trained personnel permitted to use welding, cutting or brazing equipment?
- ☐ Does each operator have a copy of the appropriate operating instructions and are they directed to follow them?
- ☐ Are compressed gas cylinders regularly examined for obvious signs of defects, deep rusting, or leakage?
- ☐ Is care used in handling and storage of cylinders, safety valves, relief valves, etc., to prevent damage?
- ☐ Are precautions taken to prevent the mixture of air or oxygen with flammable gases, except at a burner or in a standard torch?
- ☐ Are only approved apparatus (torches, regulators, pressure-reducing valves, acetylene generators, manifolds) used?
- ☐ Are cylinders kept away from sources of heat?
- ☐ Are the cylinders kept away from elevators, stairs, or gangways?
- ☐ Is it prohibited to use cylinders as rollers or supports?
- ☐ Are empty cylinders appropriately marked and their valves closed?
- ☐ Are signs reading "DANGER—NO SMOKING, MATCHES OR OPENLIGHTS" or the equivalent, posted?
- ☐ Are cylinders, cylinder valves, couplings, regulators, hoses and apparatus kept free of oily or greasy substances?
- ☐ Is care taken not to drop or strike cylinders?
- ☐ Unless secured on special trucks, are regulators removed and valve-protection caps put in place before moving cylinders?
- ☐ Do cylinders without fixed and wheels have keys, handles, or non-adjustable wrenches on stem valves when in service?
- ☐ Are liquefied gases stored and shipped valve-end up with valve covers in place?
- ☐ Are provisions made to never crack a fuel-gas cylinder valve near sources of ignition?
- ☐ Before a regulator is removed, is the valve closed and gas released from the regulator?
- ☐ Is red used to identify the acetylene (and other fuel-gas) hose, green for oxygen hose, and black for inert gas and air hose?
- ☐ Are pressure-reducing regulators used only for the gas and pressures for which they are intended?
- ☐ Is open circuit (No Load) voltage of arc welding and cutting machines as low as possible and not in excess of the recommended limits?
- ☐ Under wet conditions, are automatic controls for reducing no load voltage used?
- ☐ Is grounding of the machine frame and safety ground connections of portable machines checked periodically?
- ☐ Are electrodes removed from the holders when not in use?
- ☐ Is it required that electric power to the welder be shut off when no one is in attendance?
- ☐ Is suitable fire extinguishing equipment available for immediate use?
- ☐ Is the welder forbidden to coil or loop welding electrode cable around his body?
- ☐ Are wet machines thoroughly dried and tested before being used?
- ☐ Are work and electrode lead cables frequently inspected for wear and damage, and relaced when needed?
- ☐ Do means for connecting cable lengths have adequate insulation?
- ☐ When the object to be welded cannot be moved and fire hazards cannot be removed, are shields used to confine heat, sparks, and slag?
- ☐ Are fire watchers assigned when welding or cutting is performed in locations where a serious fire might develop?
- ☐ Are combustible floors kept wet, covered by damp sand, or protected by fire-resistant shields?
- ☐ When floors are wet down, are personnel protected from possible electrical shock?
- ☐ When welding is done on metal walls, are precautions taken to protect combustibles on the other side?
- ☐ Before hot work is begun, are used drums, barrels, tanks, and other containers so thoroughly cleaned that no substances remain that could explode, ignite, or produce toxic vapors?
- ☐ Is it required that eye protection helmets, hand shields and goggles meet appropriate standards?
- ☐ Are employees exposed to the hazards created by welding, cutting, or brazing operations protected with personal protective equipment and clothing?
- ☐ Is a check made for adequate ventilation in and where welding or cutting is performed?

- ☐ When working in confined places, are environmental monitoring tests taken and means provided for quick removal of welders in case of an emergency?

COMPRESSORS AND COMPRESSED AIR

- ☐ Are compressors equipped with pressure relief valves, and pressure gauges?
- ☐ Are compressor air intakes installed and equipped so as to ensure that only clean uncontaminated air enters the compressor?
- ☐ Are air filters installed on the compressor intake?
- ☐ Are compressors operated and lubricated in accordance with the manufacturer's recommendations?
- ☐ Are safety devices on compressed air systems checked frequently?
- ☐ Before any repair work is done on the pressure system of a compressor is the pressure bled off and the system locked-out?
- ☐ Are signs posted to warn of the automatic starting feature of the compressors?
- ☐ Is the belt drive system totally enclosed to provide protection for the front, back, top, and sides?
- ☐ Is it strictly prohibited to direct compressed air towards a person?
- ☐ Are employees prohibited from using highly compressed air for cleaning purposes?
- ☐ If compressed air is used for cleaning off clothing, is the pressure reduced to less than 10 psi?
- ☐ When using compressed air for cleaning, do employees wear protective chip guarding and personal protective equipment?
- ☐ Are safety chains or other suitable locking devices used at couplings of high pressure hose lines where a connection failure would create a hazard?
- ☐ Before compressed air is used to empty containers of liquid is the safe working pressure of the container checked?
- ☐ When compressed air is used with abrasive blast cleaning equipment is the operating valve a type that must be held open manually?
- ☐ When compressed air is used to inflate auto tires, is a clip-on chuck and an inline regulator preset to 40 psi required?
- ☐ Is it prohibited to use compressed air to clean up or move combustible dust if such action could cause the dust to be suspended in the air and cause a fire or explosion hazard?

COMPRESSORS AIR RECEIVERS

- ☐ Is every receiver equipped with a pressure guage and with one or more automatic, spring-loaded safety valves?
- ☐ Is the total relieving capacity of the safety valve capable of preventing pressure in the receiver from exceeding the maximum allowable working pressure of the receiver by more than 10 percent?
- ☐ Is every air receiver provided with a drain pipe and valve at the lowest point for the removal of accumulated oil and water?
- ☐ Are compressed air receivers periodically drained of moisture and oil?
- ☐ Are all safety valves tested frequently and at regular intervals to determine whether they are in good operating condition?
- ☐ Is there a current operating permit used by the Division of Occupational Safety and Health?
- ☐ Is the inlet of air receivers and piping systems kept free of accumulated oil and carbonaceous materials?

COMPRESSED GAS CYLINDERS

- ☐ Are cylinders with a water weight capacity over 30 pounds equipped with means for connecting a valve protector device, or with a collar or recess to protect the valve?
- ☐ Are cylinders legibly marked to clearly identify the gas contained?
- ☐ Are compressed gas cylinders stored in areas which are protected from external heat sources such as flame impingement, intense radiant heat, electric arcs, or high temperature lines?
- ☐ Are cylinders located or stored in areas where they will not be damaged by passing or falling objects or subjects to tampering by unauthorized persons?
- ☐ Are cylinders stored or transported in a manner to prevent them creating a hazard by tipping, falling or rolling?
- ☐ Are cylinders containing liquefied fuel gas, stored or transported in a position so that the safety relief device is always in direct contact with the vapor space in the cylinder?
- ☐ Are valve protectors always placed on cylinders when the cylinders are not in use or connected for use?
- ☐ Are all valves closed off before a cylinder is moved, when the cylinder is empty, and at the completion of each job?

Are low pressure fuel-gas cylinders checked periodically for corrosion, general distortion, cracks, or any other defect that might indicate a weakness or render it unfit for service?

Does the periodic check of low pressure fuel-gas cylinders include a close inspection of the cylinders' bottom?

HOIST AND AUXILLIARY EQUIPMENT

Is each overhead electric hoist equipped with a limit device to stop the hook travel at its highest and lowest point of safe travel?

Will each hoist automatically stop and hold any load up to 125 percent of its rated load, if its actuating force is removed?

Is the rated load of each hoist legibly marked and visible to the operator?

Are stops provided at the safe limits of travel for trolley hoist?

Are the controls of hoist plainly marked to indicate the direction of travel or motion?

Is each cage-controlled hoist equiped with an effective warning device?

Are close-fitting guards or other suitable devices installed on hoist to assure hoist ropes will be maintained in the sheave groves?

Are all hoist chains or ropes of sufficient length to handle the full range of movement of the application while still maintaining two full wraps on the drum at all times?

Are nip points or contact points between hoist ropes and sheaves which are permanently located within seven feet of the floor, ground or working platform guarded?

Is it prohibited to use chains or rope slings that are kinked or twisted?

Is it prohibited to use the hoist rope or chain wrapped around the load as a substitute for a sling?

Is the operator instructed to avoid carrying loads over people?

INDUSTRIAL TRUCKS—FORKLIFTS

Are only employees who have been trained in the proper use of hoists allowed to operate them?

Are only trained personnel allowed to operate industrial trucks?

Is substantial overhead protective equipment provided on high lift rider equipment?

Are the required lift truck operating rules posted and enforced?

Is directional lighting provided on each industrial truck that operates in an area with less than 2 foot candles per square foot of general lighting?

Does each industrial truck have a warning horn, whistle, gong, or other device which can be clearly heard above the normal noise in the areas where operated?

Are the brakes on each industrial truck capable of bringing the vehicle to a complete and safe stop when fully loaded?

Will the industrial trucks' parking brake effectively prevent the vehicle from moving when unattended?

Are industrial trucks operating in areas where flammable gases or vapors, or combustible dust or ignitable fibers may be present in the atmosphere, approved for such locations?

Are motorized hand and hand/rider trucks so designed that the brakes are applied, and power to the drive motor shuts off when the operator releases his or her grip on the device that controls the travel?

Are industrial trucks with internal combustion engine, operated in buildings or enclosed areas, carefully checked to ensure such operations do not cause harmful concentration of dangerous gases or fumes?

SPRAYING OPERATIONS

Is adequate ventilation assured before spray operations are started?

Is mechanical ventilation provided when spraying operations is done in enclosed areas?

When mechanical ventilation is provided during spraying operations, is it so arranged that it will not circulate the contaminated air?

Is the spray area free of hot surfaces?

Is the spray area at least 20 feet from flames, sparks, operating electrical motors and other ignition sources?

Are portable lamps used to illuminate spray areas suitable for use in a hazardous location?

Is approved respiratory equipment provided and used when appropriate during spraying operations?

Do solvents used for cleaning have a flash point to 100°F or more?

Are fire control sprinkler heads kept clean?

Are "NO SMOKING" signs posted in spray areas, paint rooms, paint booths, and paint storage areas?

Is the spray area kept clean of combustible residue?

Are spray booths constructed of metal, masonry, or other substantial noncombustible material?

Are spray booth floors and baffles noncombustible and easily cleaned?

Is infrared drying apparatus kept out of the spray area during spraying operations?

Is the spray booth completely ventilated before using the drying apparatus?

Is the electric drying apparatus properly grounded?

Are lighting fixtures for spray booths located outside of the booth and the interior lighted through sealed clear panels?

- ☐ Are the electric motors for exhaust fans placed outside booths or ducts?
- ☐ Are belts and pulleys inside the booth fully enclosed?
- ☐ Do ducts have access doors to allow cleaning?
- ☐ Do all drying spaces have adequate ventilation?

ENTERING CONFINED SPACES

- ☐ Are confined spaces thoroughly emptied of any corrosive or hazardous substances, such as acids or caustics, before entry?
- ☐ Are all lines to a confined space, containing inert, toxic, flammable, or corrosive materials valved off and blanked or disconnected and separated before entry?
- ☐ Is it required that all impellers, agitators, or other moving equipment inside confined spaces be locked-out if they present a hazard?
- ☐ Is either natural or mechanical ventilation provided prior to confined space entry?
- ☐ Are appropriate atmospheric tests performed to check for Oxygen deficiency, toxic substances and explosive concentrations in the confined space before entry?
- ☐ Is adequate illumination provided for the work to be performed in the confined space?
- ☐ Is the atmosphere inside the confined space frequently tested or continuously monitored during conduct of work?
- ☐ Is there an assigned safety standby employee outside of the confined space, when required, whose sole responsibility is to watch the work in progress, sound an alarm if necessary, and render assistance?
- ☐ Is the standby employee appropriately trained and equipped to handle an emergency?
- ☐ Is the standby employee or other employees prohibited from entering the confined space without lifelines and respiratory equipment if there is any question as to the cause of an emergency?
- ☐ Is approved respiratory equipment required if the atmosphere inside the confined space cannot be made acceptable?
- ☐ Is all portable electrical equipment used inside confined spaces either grounded and insulated, or equipped with ground fault protection?
- ☐ Before gas welding or burning is started in a confined space, are hoses checked for leaks, compressed gas bottles forbidden inside of the confined space, torches lightly only outside of the confined area and the confined area tested for an explosive atmosphere each time before a lighted torch is to be taken into the confined space?
- ☐ If employees will be using oxygen-consuming equipment such as salamanders, torches, furnaces, etc., in a confined space, is sufficient air provided to assure combustion without reducing the oxygen concentration of the atmosphere below 19.5 percent by volume?
- ☐ Whenever combustion-type equipment is used in a confined space, are provisions made to ensure the exhaust gases are vented outside of the enclosure?
- ☐ Is each confined space checked for decaying vegetation animal matter which may produce methane?
- ☐ Is the confined space checked for possible industrial waste which could contain toxic properties?
- ☐ If the confined space is below the ground and near areas where motor vehicles will be operating, is it possible for vehicle exhaust or carbon monoxide to enter the space?

ENVIRONMENTAL CONTROLS

- ☐ Are all work areas properly illuminated?
- ☐ Are employees instructed in proper first air and other emergency procedures?
- ☐ Are hazardous substances identified which may cause harm by inhalation, ingestion, skin absorption or contact?
- ☐ Are employees aware of the hazards involved with the various chemicals they may be exposed to in their work environment, such as ammonia, chlorine, epoxies, caustics, etc.?
- ☐ Is employee exposure to chemicals in the workplace kept within acceptable levels?
- ☐ Can a less harmful method or produce be used?
- ☐ Is the work area's ventilation system appropriate for the work being performed?
- ☐ Are spray painting operations done in spray rooms or booths equipped with an appropriate exhaust system?
- ☐ Is employee exposure to welding fumes controlled by ventilation, use of respirators, exposure time, or other means?
- ☐ Are welders and other workers nearby provided with flash shields during welding operations?
- ☐ If forklifts and other vehicles are used in buildings or other enclosed areas, are the carbon monoxide levels kept below maximum acceptable concentration?
- ☐ Has there been a determination that noise levels in the facilities are within acceptable levels?
- ☐ Are steps being taken to use engineering controls to reduce excessive noise levels?
- ☐ Are proper precautions being taken when handling asbestos and other fibrous materials?
- ☐ Are caution labels and signs used to warn of asbestos?
- ☐ Are wet methods used, when practicable, to prevent the emisison of airborne asbestos fibers, silica dust and similar hazardous materials?

- ☐ Is vacuuming with appropriate equipment used whenever possible rather than blowing or sweeping dust?
- ☐ Are grinders, saws, and other machines that produce respirable dusts vented to an industrial collector or central exhaust system?
- ☐ Are all local exhaust ventilation systems designed and operating properly such as air flow and volume necessary for the application, ducts not plugged or belts slipping?
- ☐ Is personal protective equipment provided, used and maintained wherever required?
- ☐ Are there written standard operating procedures for the selection and use of respirators where needed?
- ☐ Are restrooms and washrooms kept clean and sanitary?
- ☐ Is all water provided for drinking, washing, and cooking potable?
- ☐ Are all outlets for water not suitable for drinking clearly identified?
- ☐ Are employees' physical capacities assessed before being assigned to jobs requiring heavy work?
- ☐ Are employees instructed in the proper manner of lifting heavy objects?
- ☐ Where heat is a problem, have all fixed work areas been provided with spot cooling or air conditioning?
- ☐ Are employees screened before assignment to areas of high heat to determine if their health condition might make them more susceptible to having an adverse reaction?
- ☐ Are employees working on streets and roadways where they are exposed to the hazards of traffic, required to wear bright colored (traffic orange) warning vests?
- ☐ Are exhaust stacks and air intakes so located that contaminated air will not be recirculated within a building or other enclosed area?
- ☐ Is equipment producing ultra-violet radiation properly shielded?

FLAMMABLE AND COMBUSTIBLE MATERIALS

- ☐ Are combustible scrap debris and waste materials (oily rags, etc.) stored in covered metal receptacles and removed from the worksite promptly?
- ☐ Is proper storage practiced to minimize the risk of fire including spontaneous combustion?
- ☐ Are approved containers and tanks used for the storage and handling of flammable and combustible liquids?
- ☐ Are all connections on drums and combustible liquid piping, vapor and liquid tight?
- ☐ Are all flammable liquids kept in closed containers when not in use (e.g. parts cleaning tanks, pans, etc.)?
- ☐ Are bulk drums of flammable liquids grounded and bonded to containers during dispensing?
- ☐ Do storage rooms for flammable and combustible liquids have explosion-proof lights?
- ☐ Do storage rooms for flammable and combustible liquids have mechanical or gravity ventilation?
- ☐ Is liquidified petroleum gas stored, handled, and used in accordance with safe practices and standards?
- ☐ Are no smoking signs posted on liquified petroleum gas tanks?
- ☐ Are liquified petroleum storage tands guarded to prevent damage from vehicles?
- ☐ Are all solvent wastes, and flammable liquids kept in fire-resistant, covered containers until they are removed from the worksite?
- ☐ Is vacuuming used whenever possible rather than blowing or sweeping combustible dust?
- ☐ Are firm separators placed between containers of combustibles, or flammables, when stacked one upon another, to assure their support and stability?
- ☐ Are fuel gas cylinders and oxygen cylinders separated by distance, fire resistant barriers, etc. while in storage?
- ☐ Are fire extinguishers selected and provided for the types of materials in areas where they are to be used?

  Class A Ordinary combustible material fires

  Class B Flammable liquid, gas or grease fires

  Class C Energized-electrical equipment fires
- ☐ Are appropriate fire extinguishers mounted within 75 feet of outside areas containing flammable liquids, and within 10 feet of any inside storage area for such materials?
- ☐ Are extinguishers free from obstructions or blockage?
- ☐ Are all extinguishers serviced, maintained and tagged at intervals not to exceed one year?
- ☐ Are all extinguishers fully charged and in their designated places?
- ☐ Where sprinkler systems are permanently installed, are the nozzle heads so directed or arranged that water will not be sprayed into operating electrical switch boards and equipment?
- ☐ Are "NO SMOKING" signs posted where appropriate in areas where flammable or combustible materials are used or stored?
- ☐ Are safety cans used for dispensing flammable or combustible liquids at a point of use?
- ☐ Are all spills of flammable or combustible liquids cleaned up promptly?
- ☐ Are storage tanks adequately vented to prevent the development of excessive vacuum or pressure as a result of filling, emptying, or atmosphere temperature changes?
- ☐ Are storage tanks equipped with emergency venting that will relieve excessive internal pressure caused by fire exposure?
- ☐ Are "NO SMOKING" rules enforced in areas involving storage and use of hazardous materials?

HAZARDOUS CHEMICAL EXPOSURE

- ☐ Are employees trained in the safe handling practices of hazardous chemicals such as acids, caustics, etc.?
- ☐ Are employees aware of the potential hazards involving various chemicals stored or used in the workplace such as acids, bases, caustics, epoxies, phenols, etc.?
- ☐ Is employee exposure to chemicals kept within acceptable levels?
- ☐ Are eye wash fountains and safety showers provided in areas where corrosive chemicals are handled?
- ☐ Are all containers, such as vats, storage tanks, etc., labeled as to their contents, e.g., "CAUSTICS"?
- ☐ Are all employees required to use personal protective clothing and equipment when handling chemicals (gloves, eye protection, respirators, etc.)?
- ☐ Are flammable or toxic chemicals kept in closed containers when not in use?
- ☐ Are chemical piping systems clearly marked as to their content?
- ☐ Where corrosive liquids are frequently handled in open containers or drawn from storage vessels or pipe lines, is adequate means readily available for neutralizing or disposing of spills or overflows properly and safely?
- ☐ Have standard operating procedures been established and are they being followed when cleaning up chemical spills?
- ☐ Where needed for emergency use, are respirators stored in a convenient, clean, and sanitary location?
- ☐ Are respirators intended for emergency use adequate for the various uses for which they may be needed?
- ☐ Are employees prohibited from eating in areas where hazardous chemicals are present?
- ☐ Is personal protective equipment provided, used and maintained whenever necessary?
- ☐ Are there written standard operating procedures for the selection and use of respirators where needed?
- ☐ If you have a respirator protection program, are your employees instructed on the correct usage and limitations of the respirators? Are the respirators NICSH approved for this particular application? Are they regularly inspected and cleaned, sanitized and maintained?
- ☐ If hazardous substances are used in your processes, do you have a medical or biological monitoring system in operation?
- ☐ Are you familiar with the Threshold Limit Values or Permissible Exposure Limits of airborne contaminants and physical agents used in your workplace?
- ☐ Have control procedures been instituted for hazardous materials, where appropriate, such as respirators, ventilation systems handling practices, etc.?
- ☐ Whenever possible are hazardous substances handled in properly designed and exhausted booths or similar locations?
- ☐ Do you use general dilution or local exhaust ventilation systems to control dusts, vapors, gases, fumes, smoke, solvents or mists which may be generated in your workplace?
- ☐ Is ventilation equipment provided for removal of contaminants from such operations as: Production grinding, buffing, spray painting, and/or vapor degreasing, and is it operating properly?
- ☐ Do employees complain about dizziness, headaches, nausea, irritation, or other factors of discomfort when they use solvents or other chemicals?
- ☐ Is there a dermatitis problem? Do employees complain about dryness, irritation, or sensitization of the skin?
- ☐ Have you considered the use of an industrial hygienist or environmental health specialist to evaluate your operation?
- ☐ If internal combustion engines are used, is carbon monoxide kept within acceptable levels?
- ☐ Is vacuuming used, rather than blowing or sweeping dusts whenever possible for clean-up?
- ☐ Are materials which give off toxic asphyxiant, suffocating or anesthetic fumes, stored in remote or isolated locations when not in use?

HAZARDOUS SUBSTANCES COMMUNICATION

- ☐ Is there a list of hazardous substances used in your workplace?
- ☐ Is there a written hazard communication program dealing with Material Safety Data Sheets (MSDS), labeling, and employee training?
- ☐ Is each container for a hazardous substance (i.e. vats, bottles storage tanks, etc.) labeled with product identity and a hazard warning (communication of the specific health hazards and physical hazards)?
- ☐ Is there a Material Safety Data Sheet readily available for each hazardous substance used?

Is there an employee training program for hazardous substances?

Does this program include:

- ☐ (1) An explanation of what an MSDS is and how to use and obtain one.
- ☐ (2) MSDA contents for each hazardous substance or class of substances.
- ☐ (3) Explanation of "Right to Know."
- ☐ (4) Identification of where an employee can see the employers written hazard communication program and where hazardous substances are present in their work areas.
- ☐ (5) The physical and health hazards of substances in the work area, and specific protective measures to be used.
- ☐ (6) Details of the hazard communication program, including how to use the labeling system and MSDS's.

ELECTRICAL

☐ Do you specify compliance with OSHA for all contract electrical work?

☐ Are all employees required to report as soon as practicable any obvious hazard to life or property observed in connection with electrical equipment or lines?

☐ Are employees instructed to make preliminary inspections and/or appropriate tests to determine what conditions exist before starting work on electrical equipment or lines?

☐ When electrical equipment or lines are to be serviced, maintained or adjusted, are necessary switches opened, locked-out and tagged whenever possible?

☐ Are portable electrical tools and equipment grounded or of the double insulated type?

☐ Are electrical appliances such as vacuum cleaners, polishers, vending machines, etc., grounded?

☐ Do extension cords being used have a grounding conductor?

☐ Are multiple plug adaptors prohibited?

☐ Are ground-fault circuit interrupters installed on each temporary 15 or 20 ampere, 120 volt AC circuit at locations where construction, demolition, modifications, alterations or excavations are being performed?

☐ Are all temporary circuits protected by suitable disconnecting switches or plug connectors at the junction with permanent wiring?

☐ Do you have electrical installations in hazardous dust or vapor areas? If so, do they meet the National Electrical Code (NEC) for hazardous locations?

☐ Is exposed wiring and cords with frayed or deteriorated insulation repaired or replaced promptly?

☐ Are flexible cords and cables free of splices or taps?

☐ Are clamps or other securing means provided on flexible cords or cables at plugs, receptacles, tools, equipment, etc., and is the cord jacket securely held in place?

☐ Are all cord, cable and raceway connections intact and secure?

☐ In wet or damp locations, are electrical tools and equipment appropriate for the use or location or otherwise protected?

☐ Is the location of electrical power lines and cables (overhead, underground, underfloor, other side of walls, etc.) determined before digging, drilling or similar work is begun?

☐ Are metal measuring tapes, ropes, handlines or similar devices with metallic thread woven into the fabric prohibited where they could come in contact with energized parts of equipment or circuit conductors?

☐ Is the use of metal ladders prohibited in areas where the ladder or the person using the ladder could come in contact with energized parts of equipment, fixtures or circuit conductors?

☐ Are all disconnecting switches and circuit breakers labeled to indicate their use or equipment served?

☐ Are disconnecting means always opened before fuses are replaced?

☐ Do all interior wiring systems include provisions for grounding metal parts of electrical raceways, equipment and encloures?

☐ Are all electrical raceways and enclosures securely fastened in place?

☐ Are all energized parts of electrical circuits and equipment guarded against accidental contact by approved cabinets or enclosures?

☐ Is sufficient access and working space provided and maintained about all electrical equipment to permit ready and safe operations and maintenance?

☐ Are all unused openings (including conduit knockouts) in electrical enclosures and fittings closed with appropriate covers, plugs or plates?

☐ Are electrical enclosures such as switches, receptacles, junction boxes, etc., provided with tight-fitting covers or plates?

☐ Are disconnecting switches for electrical motors in excess of two horsepower, capable of opening the circuit when the motor is in a stalled condition, without exploding? (Switches must be horsepower rated equal to or in excess of the motor hp rating.)?

☐ Is low voltage protection provided in the control device of motors driving machines or equipment which could cause probable injury from inadvertent starting?

- ☐ Is each motor disconnecting switch or circuit breaker located within sight of the motor control device?
- ☐ Is each motor located within sight of its controller or the controller disconnecting means capable of being locked in the open position or is a separate disconnecting means installed in the circuit within sight of the motor?
- ☐ Is the controller for each motor in excess of two horsepower, rated in horsepower equal to or in excess of the rating of the motor it serves?
- ☐ Are employees who regularly work on or around energized electrical equipment or lines instructed in the cardio-pulmonary resuscitation (CPR) methods?
- ☐ Are employees prohibited from working alone on energized lines or equipment over 600 volts?

NOISE

- ☐ Are there areas in the workplace where continuous noise levels exceed 85dBA?
- ☐ Is there an ongoing preventive health program to educate employees in safe levels of noise, exposures, effects of noise on their health, and the use of personal protection?
- ☐ Have work areas where noise levels make voice communication between employees difficult been identified and posted?
- ☐ Are noise levels being measured using a sound level meter or an octave band analyzer and records being kept?
- ☐ Have engineering controls been used to reduce excessive noise levels? Where engineering controls are determined to not be feasible are administrative controls (i.e. worker rotation) being used to minimize individual employee exposure to noise?
- ☐ Is approved hearing protective equipment (noise attenuating devices) available to every employee working in noisy areas?
- ☐ Have you tried isolating noisy machinery from the rest of your operation?
- ☐ If you use ear protectors, are employees properly fitted and instructed in their use?
- ☐ Are employees in high noise areas given periodic audiometric testing to ensure that you have an effective hearing protection system?

FUELING

- ☐ Is it prohibited to fuel an internal combustion engine with a flammable liquid while the engine is running?
- ☐ Are fueling operations done in such a manner that likelihood of spillage will be minimal?
- ☐ When spillage occurs during fueling operations, is the spilled fuel washed away completely, evaporated, or other measures taken to control vapors before restarting the engine?
- ☐ Are fuel tank caps replaced and secured before starting the engine?
- ☐ In fueling operations, is there always metal contact between the container and the fuel tank?
- ☐ Are fueling hoses of a type designed to handle the specific type of fuel?
- ☐ Is it prohibited to handle or transfer gasoline in open containers?
- ☐ Are open lights, open flames, or sparking, or arcing equipment prohibited near fueling or transfer of fuel operations?
- ☐ Is smoking prohibited in the vicinity of fueling operations?
- ☐ Are fueling operators prohibited in building or other enclosed areas that are not specifically ventilated for this purpose?
- ☐ Where fueling or transfer of fuel is done through a gravity flow system, are the nozzles of the self-closing type?

IDENTIFICATION OF PIPING SYSTEMS

- ☐ When nonpotable water is piped through a facility, are outlets or taps posted to alert employees that it is unsafe and not to be used for drinking, washing or other personal use?
- ☐ When hazardous substances are transported through above ground piping, is each pipeline identified at points where confusion could introduce hazards to employees?
- ☐ When pipelines are identified by color painting, are all visible parts of the line so identified?
- ☐ When pipelines are identified by color painted bands or tapes, are the bands or tapes located at reasonable intervals and at each outlet valve or connection?
- ☐ When pipelines are identified by color, is the color code posted at all locations where confusion could introduce hazards to employees?
- ☐ When the contents of pipelines are identified by name or name abbreviation, is the information readily visible on the pipe near each valve or outlet?
- ☐ When pipelines carrying hazardous substances are identified by tags are the tags constructed of durable materials, the message carried clearly and permanently distinguishable and are tags installed at each valve or outlet?
- ☐ When pipelines are heated by electricity, steam or other external source, are suitable warning signs or tags placed at unions, valves, or other serviceable parts of the system?

TERIAL HANDLING

- ☐ there safe clearance for equipment through aisles and oorways?
- ☐ re aisleways designated, permanently marked, and kept clear allow unhindered passage?
- ☐ re motorized vehicles and mechanized equipment inspected aily or prior to use?
- ☐ re vehicles shut off and brakes set prior to loading or nloading?
- ☐ re containers of combustibles or flammables, when stacked hile being moved, always separated by dunnage sufficient to rovide stability?
- ☐ re dock boards (bridge plates) used when loading or unloading perations are taking place between vehicles and docks?
- ☐ re trucks and trailers secured from movement during loading nd unloading operations?
- ☐ re dock plates and loading ramps constructed and maintained with sufficient strength to support imposed loading?
- ☐ re hand trucks maintained in safe operating condition?
- ☐ re chutes equipped with sideboards of sufficient height to prevent the materials being handled from falling off?
- ☐ re chutes and gravity roller sections firmly placed or secured prevent displacement?
- ☐ the delivery end of the rollers or chutes, are provisions made brake the movement o the handled materials?
- ☐ re pallets usually inspected before being loaded or moved?
- ☐ re hooks with safety latches or other arrangements used when oisting materials so that slings or load attachments won t accidentally slip off the hoist hooks?
- ☐ re securing chains ropes, chockers or slings adequate for the b to be performed?
- ☐ hen hoisting material or equipment, are provisions made to ssure no one will be passing under the suspended loads?
- ☐ re material safety data sheets available to employees handling hazardous substances?

ANSPORTING EMPLOYEES AND TERIALS

- ☐ o employees who operate vehicles on public thoroughfares ave valid operator s licenses?
- ☐ hen seven or more employees are regularly transported in van, bus or truck, is the operator's license appropriate for the lass of vehicle being driven?
- ☐ each van, bus or truck used regularly to transport employees, quipped with an adequate number of seats?
- ☐ hen employees are transported by truck, are provisions provided to prevent their falling from the vehicle?
- ☐ Are vehicles used to transport employees equipped with lamps, brakes, horns, mirrors, windshields and turn signals in good repair?
- ☐ Are transport vehicles provided with handrails, steps, stirrups or similar devices, so placed and arranged that employees can safely mount or dismount?
- ☐ Are employee transport vehicles equipped at all times with at least two reflective type flares?
- ☐ Is a full charged fire extinguisher, in good condition, with at least 4 B:C rating maintained in each employee transport vehicle?
- ☐ When cutting tools or tools with sharp edges are carried in passenger compartments of employee transport vehicles, are they placed in closed boxes or containers which are secured in place?
- ☐ Are employees prohibited from riding on top of any load which can shift, topple, or otherwise become unstable?

CONTROL OF HARMFUL SUBSTANCES BY VENTILATION

- ☐ Is the volume and velocity of air in each exhaust system sufficient to gather the dusts, fumes, mists, vapors or gases to be controlled, and to convey them to a suitable point of disposal?
- ☐ Are exhaust inlets, ducts and plenums designed, constructed, and supported to prevent collapse or failure of any part of the system?
- ☐ Are clean-out ports or doors provided at intervals not to exceed 12 feet in all horizontal runs of exhaust ducts?
- ☐ Where two or more different type of operations are being controlled through the same exhaust system, will the combination of substances being controlled, constitute a fire, explosion or chemical reaction hazard in the duct?
- ☐ Is adequate makeup air provided to areas where exhaust systems are operating?
- ☐ Is the source point for makeup air located so that only clean, fresh air, which is free of contaminates, will enter the work environment?
- ☐ Where two or more ventilation systems are serving a work area, is their operation such that one will not offset the functions of the other?

SANITIZING EQUIPMENT AND CLOTHING

- ☐ Is personal protective clothing or equipment that employees are required to wear or use, of a type capable of being cleaned easily and disinfected?
- ☐ Are employees prohibited from interchanging personal protective clothing or equipment, unless it has been properly cleaned?

- ☐ Are machines and equipment, which process, handle or apply materials that could be injurious to employees, cleaned and/or decontaminated before being overhauled or placed in storage?
- ☐ Are employees prohibited from smoking or eating in any area where contaminates that could be injurious if ingested are present?
- ☐ When employees are required to change from street clothing into protective clothing, is a clean change room with separate storage facility for street and protective clothing provided?
- ☐ Are employees required to shower and wash their hair as soon as possible after a known contact has occurred with a carcinogen?
- ☐ When equipment, materials, or other items are taken into or removed from a carcinogen regulated area, is it done in a manner that will contaminate non-regulated areas or the external environment?

TIRE INFLATION

- ☐ Where tires are mounted and/or inflated on drop center wheels, is a safe practice procedure posted and enforced?
- ☐ Where tires are mounted and/or inflated on wheels with split rims and/or retainer rings, is a safe practice procedure post and enforced?
- ☐ Does each tire inflation hose have a clip-on chuck with at least 24 inches of hose between the chuck and an in-line hand valve and gauge?
- ☐ Does the tire inflation control valve automatically shutoff the air flow when the valve is released?
- ☐ Is a tire restraining device such as a cage, rack or other effective means used while inflating tires mounted on split rims, or rims using retainer rings?
- ☐ Are employees strictly forbidden from taking a position directly over or in front of a tire while it's being inflated?

V. ASSISTANCE IN PROBLEM SOLVING

Free On-site Consultation

A source of help now available in all states is free on-site consultation.

You may request a visit from a consultant who will give you practical advice about your job site's safety and health protection. These consultants do not issue citations, propose penalties or routinely provide information about you or your workplace conditions to the federal inspection staff.

State government agencies deliver these services which are funded substantially by federal OSHA.

To request a consultation, you need to contact a state office. (See the following pages for the address and telephone number for each state.)

Because employers, not employees, are subject to legal sanctions of the Act, you will have the option of deciding whether employees or their representatives will participate in the on-site consultation visit. Consultants, however, will be required to explain that OSHA allows employee participation during inspections.

While the on-site consultants do not write citations, issue proposed penalties or routinely provide consultation information to the inspection staff, it is expected that employers will cooperate broadly with the recommendations of the consultants and achieve compliance with the job safety and health law voluntarily.

Any conditions of "imminent danger" identified by the consultant must be resolved immediately. Such conditions are rare, but if they are found during an on-site consultation visit, you must take immediate corrective action. Please note that if immediate action is not taken, OSHA requires that the consultant immediately notify his or her supervisor so that appropriate enforcement action can be taken as prescribed by regulation. The agreement between OSHA and the state to provide on-site consultation also requires the consultant to ensure that any "serious" hazards be eliminated. These are hazards from which it is reasonably predictable that death or serious physical harm could result. When a consultant finds such a situation, he or she must notify you and give you a reasonable length of time in which to effectively control or eliminate the hazard. The consultant is required to work with you and to help you develop a plan and a timetable for correction.

If, at the end of the agreed upon period, or an agreed upon extension of time, the consultant is not satisfied that proper action has been taken, he or she must notify the consultant supervisor, who will take appropriate action as described above.

These are the only occasions when such information may be referred from the consultation staff to an enforcement office. You can see that it would be deliberate inaction on the part of the owner/manager in an imminent/serious danger situation which would force the consultant to initiate this action. We have found that this situation only arises in rare circumstances. The employer who requests consultation demonstrates an interest in having a safe and healthful workplace. We are confident that the employer will not ignore the advice of a professional when warned of such hazardous conditions.

All of this will be discussed with you when you call the state agency which provides on-site consultation. At that point, you can decide whether or not to proceed with the consultation request. If you decide against it, which we hope you will not do, you can request that the consultant send you any special materials pertaining to your workplace conditions. You should read and implement these on your own, or with continued telephone contact.

Either way, it will be worth the call.

Directory of Approved Sources of OSHA-Funded Consultation

Alabama
7(c)(1) Onsite Consultation Program
Martha Parham West
P.O. Box 70388
Tuscaloosa, Alabama 35487
(205) 348-3033

Alaska
Division of Occupational Safety and Health
Alaska Department of Labor
3301 Eagle Street, Suite 303
Pouch 7-022
Anchorage, Alaska 99510
(907) 264-2599

Arizona
Consultation and Training
Division of Occupational Safety and Health
Industrial Commission of Arizona
P.O. Box 19070
Phoenix, Arizona 85005
(602) 255-5795

Arkansas
OSHA Consultation
Arkansas Department of Labor
10421 West Markham
Little Rock, Arkansas 72205
(501) 682-4522

California
CAL/OSHA Consultation Service
525 Golden Gate Avenue
2nd Floor
P.O. Box 603
San Francisco, California 94102
(415) 557-2870

Colorado
Occupational Safety and Health Section
Institute of Rural Environmental Health
Colorado State University
110 Veterinary Science Building
Fort Collins, Colorado 80523
(303) 491-6151

Connecticut
Division of Occupational Safety and Health
Connecticut Department of Labor
200 Folly Brook Boulevard
Wethersfield, Connecticut 06109
(203) 566-4550

Delaware
Occupational Safety and Health
Division of Industrial Affairs
Delaware Department of Labor
820 North French Street, 6th Floor
Wilmington, Delaware 19801
(302) 571-3908

District of Columbia
Office of Occupational Safety and Health
District of Columbia Department of Employment Services
950 Upshur Street, N.W
Washington, D.C. 20011
(202) 576-6339

Florida
7(c)(1) Onsite Consultation Program
Bureau of Industrial Safety and Health
Department of Labor and Employment Security
Forrest Building, Suite 349
2728 Center View Drive
Tallahassee, Florida 32399-0663
(904) 488-3044

Georgia
7(c)(1) Onsite Consultation Program
Georgia Institute of Technology
O'Keefe Building - Room 23
Atlanta, Georgia 30332
(404) 894-8274

Guam
OSHA Onsite Consultation
Government of Guam
Int'l Trade Center
3rd Floor
P.O. Box 9970
Tamuning, Guam 96911
(671) 646-9244

Hawaii
Division of Occupational Safety and Health
830 Punchbowl Street
Honolulu, Hawaii 96813
(808) 548-4155

Idaho
Safety and Health Consultation Program
Boise State University
Department of Commerce and Environmental Health
1910 University Drive, MG-110
Boise, Idaho 83725
(208) 385-3283

Illinois
Illinois Onsite Consultation
Industrial Services Division
Department of Commerce and Community Affairs
State of Illinois Center
100 West Randolph St.
Suite 3-400
Chicago, Illinois 60601
(312) 814-2339

Indiana
Division of Labor
Bureau of Safety, Education and Training
1013 State Office Building
Indianapolis, Indiana 46204-2287
(317) 232-2688

Iowa
7(c)(1) Consultation Program
Iowa Bureau of Labor
1000 East Grand Avenue
Des Moines, Iowa 50319
(515) 281-5352

Kansas
Kansas 7(c)(1) Consultation Program
Kansas Department of Human Resources
512 West 6th Street
Topeka, Kansas 66603
(913) 296-4386

Kentucky
Consultation and Training
Kentucky OSH Program
Kentucky Labor Cabinet
U.S. Highway 127, South, Bay 4
Frankfort, Kentucky 40601
(502) 564-6895

Louisiana
7(c)(1) Consultation Program
Office of Workers' Compensation
Louisiana Department of Labor
1001 North 23rd Street
Baton Rouge, Louisiana 70804-9094
(504) 342-9601

Maine
Division of Industrial Safety
Maine Department of Labor
State Home Station 82
Hallowell Annex
Augusta, Maine 04333
(207) 289-6460

Maryland
7(c)(1) Consultation Services
Division of Labor and Industry
501 Saint Paul Place
Baltimore, Maryland 21202
(301) 333-4218

Massachusetts
7(c)(1) Consultation Program
Division of Industrial Safety
Massachusetts Department of Labor and Industries
100 Cambridge Street
Boston, Massachusetts 02202
(617) 727-3463

Michigan
Michigan Department of Public Health
Division of Occupational Health
3423 N. Logan Street
P.O. Box 30195
Lansing, Michigan 48909
(517) 335-8250

Bureau of Safety and Regulation
Michigan Department of Labor
7150 Harris Drive
P.O. Box 30015
Lansing, Michigan 48909
(517) 322-1814

Minnesota
Consultation Division
Department of Labor and Industry
443 Lafayette Road
St. Paul, Minnesota 55155
(612) 297-2393

Mississippi
7(c)(1) Onsite Consultation Program
Division of Occupational Safety and Health
Mississsippi State Board of Health
305 West Lorenz Boulevard
Jackson, Mississippi 39219-1700
(601) 987-3981

Missouri
Onsite Consultation Program
Division of Labor Standards
Department of Labor and Industrial Relations
3315 West Truman Boulevard
Jefferson City, Missouri 65109
(314) 751-3403

Montana
Montana Bureau of Safety and Health
Division of Workers Compensation
5 South Last Chance Gulch
Helena, Montana 59601
(406) 444-6401

Nebraska
Division of Safety, Labor and Safety Standards
Nebraska Department of Labor
State Office Building
301 Centennial Mall, South
Lincoln, Nebraska 68509-5024
(402) 471-4717

Nevada
Training and Education Section
Division of Occupational Safety and Health
4600 Kietzke Lane, Building D, Suite 139
Reno, Nevada 89502
(702) 789-0546

New Hampshire
Onsite Consultation Program
New Hampshire Department of Labor
19 Pillsbury Street
Concord, New Hampshire 03301
(603) 271-3170

New Jersey
Division of Workplace Standards
New Jersey Department of Labor
CN953
Trenton, New Jersey 08625-0953
(609) 984-3507

New Mexico
OSHA Consultation
Occupational Health and Safety Bureau
1190 St. Francis Drive, Room N-2200
Santa Fe, New Mexico 87504-0968
(505) 827-2885

New York
Division of Safety and Health
New York State Department of Labor
One Main Street, Room 809
Brooklyn, New York 11201
(718) 797-7646

North Carolina
North Carolina Consultative Services
North Carolina Department of Labor
Shore Memorial Building
214 West Jones Street
Raleigh, North Carolina 27603
(919) 733-3949

North Dakota
Division of Environmental Engineering
North Dakota State Department of Health
1200 Missouri Avenue, Room 304
Bismarck, North Dakota 58502-5520
(701) 224-2348

Ohio
Division of Onsite Consultation
Department of Industrial Relations
2323 West 5th Avenue
P.O. Box 825
Columbus, Ohio 43216
(614) 644-2631

Oklahoma
OSHA Division
Oklahoma Department of Labor
30 North West 7th Street
Oklahoma City, Oklahoma 73102
(405) 239-6823

Oregon
7(c)(1) Consultation Program
Department of Insurance and Finance/APD
Labor and Industries Building
Salem, Oregon 97310
(503) 378-3272

Pennsylvania
Indiana University of Pennsylvania
Safety Sciences Department
205 Uhler Hall
Indiana, Pennsylvania 15705
(412) 357-2561/2396
(Toll-free in state)
(800) 382-1241

Puerto Rico
Occupational Safety and Health Office
Puerto Rico Department of Labor and Human Resources
505 Munoz Rivera Avenue, 21st Floor
Hato Rey, Puerto Rico 00918
(809) 754-2134/2171

Rhode Island
Division of Occupational Health
Rhode Island Department of Health
206 Cannon Building
75 Davis Street
Providence, Rhode Island 02908
(401) 277-2438

South Carolina
7(c)(1) Onsite Consultation Program
Consultation and Monitoring, SC DOL
3600 Forest Drive
P.O. Box 11329
Columbia, South Carolina 29211
(803) 734-9599

South Dakota
S.T.A.T.E. Engineering Extension
Onsite Technical Division
South Dakota State University
PO Box 2218
Brookings, South Dakota 57007
(605) 688-4101

Tennessee
OSHA Consultative Services
Tennessee Department of Labor
501 Union Building, 6th Floor
Nashville, Tennessee 37219
(615) 741-7036

Texas
Occupational Safety and Health Division
Texas Department of Health
1100 West 49th Street
Austin, Texas 78756
(512) 458-7254

Utah
Utah Safety and Health Consultation Service
160 East 300 South, 3rd Floor
Salt Lake City, Utah 84151-0870
(801) 530-6868

Vermont
Division of Occupational Safety and Health
Vermont Department of Labor and Industry
118 State Street
Montpelier, Vermont 05602
(802) 828-2765

Virginia
Virginia Department of Labor and Industry
Voluntary Safety and Health Compliance
2201 West Broad Street
Richmond, Virginia 23220
(804) 367-9980

Virgin Islands
Division of Occupational Safety and Health
Virgin Islands Department of Labor
Lagoon Street
Frederiksted, Virgin Island 00840
(809) 772-1315

Washington
Voluntary Services
Washington Department of Labor and Industries
1011 Plum Street, M/S HC-462
Olympia, Washington 98504
(206) 586-0961

West Virginia
West Virginia Department of Labor
State Capitol, Building 3, Room 319
1800 E. Washington Street
Charleston, West Virginia 25305
(304) 348-7890

Wisconsin
Section of Occupational Health
Wisconsin Department of Health and Human Services
1414 E. Washington Avenue
Room 112
Madison, Wisconsin 53703
(608) 266-8579

Wisconsin Department of Industry Labor and Human Relations
Bureau of Safety Inspection
1570 East Moreland Boulevard
Waukesha, Wisconsin 53186
(414) 521-5063

Wyoming
Occupational Health and Safety
State of Wyoming
122 West 25th, Herschler Bldg.
Cheyenne Wyoming 82002
(307) 777-7786

Multiple Sources of Help

Workers' Compensation Carriers And Other Insurance Companies

Many workers' compensation carriers as well as many liability and fire insurance companies conduct periodic inspections and visits to evaluate safety and health hazards. Managers of small and medium-sized businesses need to know what services are available from these sources. Contact your carrier and see what it has to offer.

Trade Associations and Employer Groups

Because of the increase in job safety and health awareness resulting from OSHA activities, many trade associations and employer groups have put a new emphasis on safety and health matters to better serve their members. If you are a member of such a group, find out how it is assisting its members. If you are not a member, find out if these groups are circulating their materials to nonmembers, as many do.

Trade Unions and Employee Groups

If your employees are organized, set up some communications, as you do in normal labor relations, to get coordinated action on hazards in your business. Safety and health is one area where advance planning will produce action on common goals. Many trade unions have safety and health expertise that they are willing to share.

The National Safety Council and Local Chapters

The National Safety Council has a broad range of information services available. If you have a local chapter of the NSC, you can call or visit to see how you can use materials pertaining to your business. If there is no chapter nearby, you can write

National Safety Council
444 North Michigan Avenue
Chicago, Illinois 60611

Voluntary Protection Programs Participants Association (VPPPA)

The VPPPA has members in most states where the federal OSHA program operates. The VPPPA is willing to provide information and outreach to help worksites improve their safety and health programs. Chapters of the National Association have been formed in several of the OSHA regions. Members of these chapters are also willing to provide the kind of assistance provided by the national organization. In order to contact your regional chapter of the Association, please call or write your OSHA Regional Office listed on page 48 in this Section. They will be able to provide you with the address and telephone number of the chapter in your Region. To contact the VPPPA national organization, please write to the following address requesting the address and telephone number of the Association:

Department of Labor - OSHA
Division of Voluntary Programs
Room N-3700
200 Constitution Avenue, N.W.
Washington, D.C. 20210

Professional Associations

The following Professional Associations are an additional resource that may be able to provide assistance to you:

American Society of Safety Engineers
850 Busse Highway
Park Ridge, Illinois 60068

American Industrial Hygiene Association
P.O. Box 8390
345 White Pond Drive
Akron, Ohio 44320

American Conference of Governmental Industrial Hygienists
6500 Glenway Avenue, Bldg. D-7
Cincinnati, Ohio 45211-4438

For Specific Medical Consultation

Talk to your local doctors or clinics and see if one of them will advise you on workplace medical matters on a consulting basis.

You can contact your local Red Cross Chapter for assistance in first-aid training. If you cannot locate a local chapter, write:

American National Red Cross
National Headquarters
Safety Programs
18th and E Streets, N.W.
Washington, D.C. 20006

Your Local Library

Many local or university libraries contain information on specific safety and health subjects pertaining to your business.

These materials are usually in reference rooms or technical subject areas. Ask your librarian what is available. The library may be able to obtain material for you, through inter-library loan, purchase, etc.

Two basic publications of the National Safety Council will give you many sources of technical information. The *Accident Prevention Manual for Industrial Operations* is a basic reference book for all safety and health work. The second, *Fundamentals of Industrial Hygiene*, contains excellent information on toxic materials and recommended health and hygiene practices. Both of these references have other sources listed at the end of each chapter that may help you in solving specific problems.

Contacting OSHA Offices

LOCAL AREA OFFICES

The following is a list of addresses and telephone numbers of OSHA Area Offices. These offices are sources of information, publications, and assistance in understanding the requirements of the standards.

They can furnish you the basic publications you need:

1. *Job Safety and Health Protection* (the OSHA workplace poster).
2. The OSHA recordkeeping requirements.
3. A copy of the appropriate set of standards.
4. A large selection of publications concerned with safe work practices, control of hazardous substances, employer and employee rights and responsibilities and other subjects.

Feel free to contact these offices by phone, by mail or in person, without fear of triggering an inspection. However, if you request OSHA compliance personnel to visit your place of business, they are required to issue citations if a violation of an OSHA standard is observed. (We suggest you request a consultation visit instead.)

ALABAMA
Birmingham, AL 35216
2047 Canyon Road-Todd Mall
Telephone: (205) 731-1534

ALASKA
Anchorage, AK 99513-7571
Federal Bldg., USCH Room 211
222 West 7th Ave., #29
Telephone (907) 271-5152

ARIZONA
Phoenix, AZ 85016
3221 North 16th St-Suite 100
Telephone (602) 640-2007

ARKANSAS
Little Rock, AR 72201
Savers Bldg -Suite 828
320 West Capitol Avenue
Telephone (501) 378-6291

CALIFORNIA
San Francisco, CA 94105
71 Stevenson St.
Suite 415
Telephone: (415) 744-6670

COLORADO
Denver, CO 80204
1244 Speer Blvd.
Colonnade Center, Suite 360
Telephone: (303) 844-5285

CONNECTICUT
Hartford, CT 06103
Federal Office Building
450 Main Street-Rm. 508
Telephone: (203) 240-3152

FLORIDA
Fort Lauderdale, FL 33301
299 East Broward Blvd.-Rm 302
Telephone: (305) 527-7292

Jacksonville, FL 32216
3100 University Blvd., South
Telephone: (904) 791-2895

Tampa, FL 33602
700 Twiggs Street-Rm 624
Telephone: (813) 228-2821

GEORGIA
Tucker, GA 30084
Bldg. 7, Suite 110
La Vista Perimeter Office Park
Telephone: (404) 331-4767/0353

HAWAII
Honolulu, HI 96850
300 Ala Moana Blvd.-Suite 5122
Telephone: (808) 541-2685

IDAHO
Boise, ID 83903
Suite 134
3050 North Lake Harbor Lane
Telephone: (208) 334-1867

ILLINOIS
Calumet City, IL 60409
1600 167th St.-Suite 12
Telephone: (312) 891-3800

Des Plaines, IL 60018
2360 E. Devon Avenue
Suite 1010
Telephone: (312) 803-4800

North Aurora, IL 60542
344 Smoke Tree Business Park
Telephone: (312) 896-8700
Peoria, IL 61614-1223
2001 West Willow Knolls Rd
Suite 101
Telephone: (309) 671-7033

INDIANA
Indianapolis, IN 46204
46 East Ohio Street-Rm. 423
Telephone: (317) 269-7290

IOWA
Des Moines, IA 50309
210 Walnut Street-Rm. 815
Telephone: (515) 284-4794

KANSAS
Wichita, KS 67202
216 N. Waco-Suite B
Telephone: (316) 269-6644

KENTUCKY
Frankfort, KY 40601
John C. Watts Fed. Bldg.-Rm. 108
330 W.Broadway
Telephone: (502) 227-7024

LOUISIANA
Baton Rouge, LA 70806
2156 Wooddale Blvd.
Hoover Annex-Suite 200
Telephone: (504) 389-0474

MAINE
Augusta, ME 04330
U S Federal Bldg
40 Western Ave.-Rm. 121
Telephone (207) 622-8417

MARYLAND
Baltimore, MD 21201
Federal Bldg.-Rm. 1110
Charles Center 31 Hopkins Plaza
Telephone (301) 962-2840

MASSACHUSETTS
Springfield, MA 01103-1493
1145 Main Street-Rm. 108
Telephone (413) 785-0123

Waltham, MA 02154
400-2 Totten Pond Road, 2nd Floor
Telephone (617) 647-8681

MICHIGAN
Lansing, MI 48933
300 E. Michigan Ave.-Rm. 305
Telephone (517) 377-1892

MINNESOTA
Minneapolis, MN 55401
110 South 4th Street-Rm 425
Telephone: (612) 348-1994

MISSISSIPPI
Jackson, MS 39269
Federal Bldg.-Suite 1445
110 West Capitol Street
Telephone: (601) 965-4606

MISSOURI
Kansas City, MO 64106
911 Walnut St.-Rm. 2202
Telephone: (816) 426-2756

St. Louis, MO 63120
4300 Goodfellow Blvd.-Bldg. 105E
Telephone: (314) 263-2749

MONTANA
Billings, MT 59101
19 N. 25th Street
Telephone (406) 657-6649

NEBRASKA
Omaha, NE 68106
Overland-Wolf Bldg.-Rm 100
6910 Pacific Street
Telephone: (402) 221-3182

NEVADA
Carson City, NV 98701
1413 N. Carson Blvd., 1st Floor
Telephone: (702) 885-6963

NEW HAMPSHIRE
Concord, NH 03301
Federal Bldg.-Rm. 334
55 Pleasant Street
Telephone: (603) 225-1629

NEW JERSEY
Avenel, NJ 07001
Plaza 35-Suite 205
1030 Saint Georges Ave.
Telephone: (201) 750-3270

Marlton, NJ 08053
Marlton Executive Park
701 Route 73 South Bldg. 2
Telephone: (609) 757-5181

Dover, NJ 07801
2 E. Blackwell Street
Telephone: (201) 361-4050

Hasbrouck Heights, NJ 07604
500 Route 17 South-2nd Floor
Telephone: (201) 288-1700

NEW MEXICO
Albuquerque, NM 87102
320 Central Ave., S.W.
Suite 13
Telephone: (505) 776-3411

NEW YORK
Albany, NY 12207
Leo W. O'Brien Federal Bldg.
Clinton Ave. & N. Pearl St.
Rm. 132
Telephone: (518) 472-6085

Bayside, NY 11361
42-40 Bell Blvd. 5th Floor
Telephone: (718) 279-9060

Bowmansville, NY 14026
5360 Genesee Street
Telephone: (716) 684-3891

New York, NY 10007
90 Church Street-Rm. 1407
Telephone: (212) 264-9840

Syracuse, NY 13260
100 S. Clinton Street-Rm. 1267
Telephone: (315) 423-5188

Westbury, NY 11590
990 Westbury Rd.
Telephone: (516) 334-3344

NORTH CAROLINA
Raleigh, NC 27601
Century Station-Rm. 104
300 Fayetteville Street Mall
Telephone: (919) 856-4770

NORTH DAKOTA
Bismarck, ND 58501
Federal Bldg.-Rm 348
PO Box 2439
Telephone: (701) 250-4521

OHIO
Cincinnati, OH 45202
Federal Office Bldg.-Rm. 4028
550 Main Street
Telephone: (513) 684-3784

Cleveland, OH 44199
Federal Office Bldg.-Rm. 899
1240 East Ninth Street
Telephone: (216) 522-3818

Columbus, OH 43215
Federal Office Bldg.-Rm. 620
200 N. High Street
Telephone: (614) 469-5582

Toledo, OH 43604
Federal Office Bldg.-Rm. 734
234 North Summit Street
Telephone: (419) 259-7542

OKLAHOMA
Oklahoma City, OK 73102
420 West Main Place-Suite 725
Telephone: (405) 231-5351

OREGON
Portland, OR 97204
1220 S.W. Third Ave.-Rm. 640
Telephone: (503) 326-2251

PENNSYLVANIA
Allentown, PA 18102
850 N. 5th Street
Telephone: (215) 776-4220

Erie, PA 16501-1462
Rothrock Bldg.
Room 408
121 West 10th Street
Telephone (814) 453-4351

Harrisburg, PA 17109
Progress Plaza
49 N. Progress Street
Telephone (717) 782-3902

Philadelphia, PA 19106
U S Custom House-Rm 242
Second and Chestnut Street
Telephone (215) 597-4955

Pittsburgh PA 15222
1000 Liberty Ave -Rm. 2236
Telephone (412) 644-2903

Wilkes-Barre, PA 18701
Penn Place-Rm 2005
20 North Pennsylvania Ave
Telephone (717) 826-6538

PUERTO RICO
Hato Rey PR 00918
U S Courthouse & FOB
Carlos Chardon St -Room 559
Telephone (809) 766-5457

RHODE ISLAND
Providence RI 02903
380 Westminster Mall
Room 243
Telephone (401) 528-4669

SOUTH CAROLINA
Columbia, SC 29201
1835 Assembly Street
Rm. 1468
Telephone: (803) 765-5904

TENNESSEE
Nashville, TN 37215-2809
2002 Richard Jones Rd.
Suite C-205
Telephone: (615) 736-5313

TEXAS
Austin, TX 78701
611 East 6th Street-Rm. 303
Telephone: (512) 482-5783

Corpus Christi, TX 78401
Government Plaza-Rm. 300
400 Mann Street
Telephone: (512) 888-3257

Fort Worth, TX 76180-7604
North Star 2 Bldg.
Suite 430
8713 Airport Freeway
Telephone: (817) 885-7025

Houston, TX 77004
2320 La Branch Street-Rm. 1103
Telephone: (713) 750-1727

Irving, TX 75061
1425 W. Pioneer Drive
Telephone: (214) 767-5347

Lubbock, TX 79401
Federal Bldg.-Rm 421
1205 Texas Avenue
Telephone: (806) 743-7681

UTAH
Salt Lake City, UT 84115
1781 South 300 West
Telephone: (801) 524-5080

WASHINGTON
Bellevue, WA 98004
121 107th Ave N.E.
Telephone: (206) 442-7520

WEST VIRGINIA
Charleston, WV 25301
550 Eagan Street-Rm. 206
Telephone: (304) 347-5937

WISCONSIN
Appleton, WI 54915
2618 North Ballard Road
Telephone: (414) 734-4521

Madison, WI 53713
2934 Fish Hatchery Rd.
Suite 225
Telephone: (608) 264-5388

Milwaukee, WI 53203
Suite 1180
310 West Wisconsin Ave.
Telephone: (414) 291-3315

Ten Regional Offices

If you are unable to contact your local OSHA Area Office, you may contact the appropriate OSHA Regional Office for information and/or assistance.

Region I
(CT,* MA, ME, NH, RI, VT*)
133 Portland Street
1st Floor
Boston, MA 02114
Telephone: (617) 565-7164

Region II
(NJ, NY,* PR,* VI*)
201 Varick Street
Room 670
New York, NY 10014
Telephone: (212) 337-2378

Region III
(DC, DE, MD,* PA, VA,* WV)
Gateway Building, Suite 2100
3535 Market Street
Philadelphia, PA 19104
Telephone: (215) 596-1201

Region IV
(AL, FL, GA, KY,* MS, NC,* SC,* TN*)
1375 Peachtree Street, N.E
Suite 587
Atlanta, GA 30367
Telephone: (404) 347-3573

Region V
(IL, IN,* MI,* MN,* OH, WI)
230 South Dearborn Street
Room 3244
Chicago, IL 60604
Telephone: (312) 353-2220

Region VI
(AR, LA, NM,* OK, TX)
525 Griffin Street
Room 602
Dallas, TX 75202
Telephone: (214) 767-4731

Region VII
(IA,* KS, MO, NE)
911 Walnut Street
Room 406
Kansas City, MO 64106
Telephone: (816) 426-5861

Region VIII
(CO, MT, ND, SD, UT,* WY*)
Federal Building, Room 1576
1961 Stout Street
Denver, CO 80294
Telephone: (303) 844-3061

Region IX
(American Samoa, AZ,* CA,* Guam, HI,* NV,* Trust Territories of the Pacific)
71 Stevenson Street
Room 415
San Francisco, CA 94105
Telephone: (415) 744-6670

Region X
(AK,* ID, OR,* WA*)
1111 Third Avenue, Suite 715
Seattle, WA 98101-3212
Telephone: (206) 442-5930

*These states and territories operate their own OSHA-approved job safety and health programs (Connecticut and New York plans cover public employees only). States with approved programs must have a standard that is identical to, or at least as effective as, the federal standard.

State-Operated Compliance Programs

The federal Occupational Safety and Health Act encourages each state to assume the fullest responsibility for the administration and enforcement of occupational safety and health programs. For example, federal law permits any state to assert jurisdiction, under state law, over any occupational safety or health standard not covered by a federal standard.

In addition, any state may assume responsibility for the development and enforcement of its own occupational safety and health standards for those areas now covered by federal standards. However, the state must first submit a plan for approval by the Labor Department's Occupational Safety and Health Administration. Many states have done so.

Certain states are now operating under approved state plans. These states may have adopted the existing federal standards or may have developed their own standards. Some states also have changed the required poster. You need to know whether you are covered by state plan operation, or are subject to the federal program, in order to determine which set of standards and regulations (federal or state) apply to you. The easiest way to determine this is to call the nearest OSHA Area Office.

If you are subject to state enforcement, the OSHA Area Office will explain this, explain whether the state is using the federal standards, and provide you with information on the poster and on the OSHA record-keeping requirements. The OSHA Area Office will also refer you to the appropriate state government office for further assistance.

This assistance also may include the free on-site consultation visits described earlier. If you are subject to state enforcement, you should also take advantage of this service.

For your information, the following are operating under OSHA-approved state plans, as of July 1, 1989:

Alaska	North Carolina
Arizona	Oregon
California	Puerto Rico
Hawaii	South Carolina
Indiana	Tennessee
Iowa	Utah
Kentucky	Vermont
Maryland	Virginia
Michigan	Virgin Islands
Minnesota	Washington
Nevada	Wyoming
New Mexico	

Connecticut and New York have programs which cover only State and local government operations.

Model Policy Statements

"The Occupational Safety and Health Act of 1970 clearly states our common goal of safe and healthful working conditions. The safety and health of our employees continues to be the first consideration in the operation of this business."

"Safety and health in our business must be a part of every operation. Without question it is every employee's responsibility at all levels."

"It is the intent of this company to comply with all laws. To do this we must constantly be aware of conditions in all work areas that can produce injuries. No employee is required to work at a job he or she knows is not safe or healthful. Your cooperation in detecting hazards and, in turn, controlling them is a condition of your employment. Inform your supervisor immediately of any situation beyond your ability or authority to correct."

"The personal safety and health of each employee of this company is of primary importance. The prevention of occupationally-induced injuries and illnesses is of such consequence that it will be given precedence over operating productivity whenever necessary. To the greatest degree possible, management will provide all mechanical and physical facilities required for personal safety and health in keeping with the highest standards."

"We will maintain a safety and health program conforming to the best practices of organizations of this type. To be successful, such a program must embody the proper attitudes toward injury and illness prevention on the part of supervisors and employees. It also requires cooperation in all safety and health matters, not only between supervisor and employee, but also between each employee and his or her co-workers. Only through such a cooperative effort can a safety program in the best interest of all be established and preserved."

"Our objective is a safety and health program that will reduce the number of injuries and illnesses to an absolute minimum, not merely in keeping with, but surpassing, the best experience of operations similar to ours. Our goal is zero accidents and injuries."

"Our safety and health program will include:

- Providing mechanical and physical safeguards to the maximum extent possible.
- Conducting a program of safety and health inspections to find and eliminate unsafe working conditions or practices, to control health hazards, and to comply fully with the safety and health standards for every job.
- Training all employees in good safety and health practices
- Providing necessary personal protective equipment and instructions for its use and care
- Developing and enforcing safety and health rules and requiring that employees cooperate with these rules as a condition of employment.
- Investigating, promptly and thoroughly, every accident to find out what caused it and to correct the problem so that it won't happen again.
- Setting up a system of recognition and awards for outstanding safety service or performance."

"We recognize that the responsibilities for safety and health are shared:

- The employer accepts the responsibility for leadership of the safety and health program, for its effectiveness and improvement, and for providing the safeguards required to ensure safe conditions.

- Supervisors are responsible for developing the proper attitudes toward safety and health in themselves and in those they supervise, and for ensuring that all operations are performed with the utmost regard for the safety and health of all personnel involved, including themselves.

- Employees are responsible for wholehearted, genuine operation with all aspects of the safety and health program including compliance with all rules and regulation--and for continuously practicing safety while performing their duties."

Codes of Safe Practices

This is a suggested code. It is general in nature and inclusive of many types of small business activities. It is intended only as a model which you can redraft to describe your own particular work environment.

GENERAL POLICY

1 All employees of this firm shall follow these safe practices rules, render every possible aid to safe operations, and report all unsafe conditions or practices to the supervisor/employer.

2. Supervisors shall insist that employees observe and obey every rule, regulation and order necessary to the safe conduct of the work, and shall take such action necessary to obtain compliance.

3 All employees shall be given frequent accident prevention instructions. Instructions, practice drills and articles concerning workplace safety and health shall be given at least once every ____ working days.

4 Anyone known to be under the influence of alcohol and/or drugs shall not be allowed on the job while in that condition Persons with symptoms of alcohol and/or drug abuse are encouraged to discuss personal or work-related problems with the supervisor/employer.

5 No one shall knowingly be permitted or required to work while his or her ability or alertness is impaired by fatigue, illness or other causes that might expose the individual or others to injury

6 Employees should be alert to see that all guards and other protective devices are in proper places and adjusted, and shall report deficiencies. Approved protective equipment shall be worn in specified work areas.

7 Horseplay scuffling and other acts which tend to endanger the safety or well-being of employees are prohibited

8 Work shall be well planned and supervised to prevent injuries when working with equipment and handling heavy materials. When lifting heavy objects, employees should bend their knees and use the large muscles of the leg instead of the smaller muscles of the back Back injuries are the most frequent and often the most persistent and painful type of workplace injury.

9. Workers shall not handle or tamper with any electrical equipment, machinery or air or water lines in a manner not within the scope of their duties, unless they have received instructions from their supervisor/employer.

10 All injuries shall be reported promptly to the supervisor/employer so that arrangements can be made for medical and/or first-aid treatment. First-aid materials are located in _____, emergency, fire, ambulance, rescue squad, and doctor's telephone numbers are located on _____, and fire extinguishers are located at _____.

SUGGESTED SAFETY RULES

- Do not throw material, tools or other objects from heights (whether structures or buildings) until proper precautions are taken to protect others from the falling object hazard.
- Wash thoroughly after handling injurious or poisonous substances.
- Gasoline shall not be used for cleaning purposes.
- Arrange work so that you are able to face ladder and use both hands while climbing.

USE OF TOOLS AND EQUIPMENT

- Keep faces of hammers in good condition to avoid flying nails and bruised fingers.
- Files shall be equipped with handles; never use a file as a punch or pry.
- Do not use a screwdriver as a chisel.
- Do not lift or lower portable electric tools by the power cords, use a rope. Do not leave the cords of these tools where cars or trucks will run over them

MACHINERY AND VEHICLES

- Do not attempt to operate machinery or equipment without special permission, unless it is one of your regular duties
- Loose or frayed clothing, dangling ties, finger rings, etc must not be worn around moving machinery or other places they can get caught.
- Machinery shall not be repaired or adjusted while in operation

OSHA Job Safety and Health Standards

There are three separate sets of standards General Industry (29 CFR 1910), Construction (29 CFR 1926) and Maritime Employment (29 CFR 1915-1919). They are available in two ways:

1. A complimentary copy of the OSHA standards for General Industry, Construction or Maritime Employment may be obtained from the OSHA office nearest you. **Please include a self-addressed mailing label to assist in answering your request.**

2. General Industry Standards and Interpretations are available as Volume I, of the Occupational Safety and Health Subscription Service at a cost of $30.00. Construction Standards and Interpretations are Volume III at $8.00. Maritime Standards and Interpretations are Volume II at $7.50. The cost includes updated material sent periodically for an indefinite period of time. Make check payable to the Superintendent of Documents, and mail your order to:

   Superintendent of Documents
   Government Printing Office
   Washington, D.C. 20402

   Note: DO NOT SEND MONEY (checks, money orders, etc.) TO OSHA. All purchase items are available from the Superintendent of Documents only. Contact that office directly.

After you have obtained a copy of the current standards, those that apply to your business can be identified easily by a process of elimination. Read the introduction to the subpart heading, then analyze the possible hazards mentioned, but only in terms of your workplace, your equipment, your materials and your employees.

For example, if you are engaged in retail trade or service and you do not have compressed gases, flammables or explosives on your premises, you can eliminate Hazardous Materials (Subpart H) as not applying to your business.

Most small businesses need to pay particular attention to the following:

Walking-Working Surfaces (Subpart D)

Means of Egress (Subpart E)

Occupational Health and Environmental Control (Subpart G)

Fire Protection (Subpart L)

Materials Handling and Storage (Subpart N)

Applicability of other standards depends on the functions of your business.

If you have any problems determining whether a standard is applicable to your workplace, you may contact the nearest OSHA Area Office for assistance. Staff there should be able to answer any questions you may have about standards, as well as give you general guidelines on methods of implementing them in your workplace.

Financing Workplace Improvement

The Small Business Administration (SBA) is authorized to make loans to assist small businesses to meet OSHA standards. Because SBA's definition of a "small" business varies from industry to industry, it is advisable to contact your local SBA field office and ask whether you qualify.

If you have not been inspected by OSHA, now is the time to seek consultation to learn whether your workplace will require any improvements-and how much the improvements are going to cost. This can be done by calling your OSHA Regional Office. Staff there can assist you in assessing what improvements are needed and which standards relate to the condition(s) to be corrected.

A helpful hint, if you decide to apply for an SBA loan: experience indicates that most delays in processing SBA/OSHA loans are due to applications which either do not (1) adequately describe each workplace condition to be corrected and identify one or more OSHA standard(s) applicable to the condition to be corrected, or (2) provide a reasonable estimate of the cost of correct each condition.

In most cases, safety hazards can be corrected without financial assistance. Health hazards may be more costly to correct. The age and condition of the building and equipment are major factors to be considered.

Interest rate information on SBA loans may be obtained from any SBA office. They fluctuate but are generally lower than you can obtain elsewhere.

In addition, you may wish to consult your own bank. It pays to shop around for loans.

And don't forget to check with your accountant at income tax time, since safety and health improvements generally can be expended or depreciated.

OVERALL ACTION PLAN

Major Action Steps to be Taken	Priority (Assign Each Step a Number)	Projected Completion Date	Actual Completion Date
1.			
2.			
3.			
4.			
5.			
6.			
7.			
8.			
9.			
10.			

WORKSHEET

ACTION STEP

Description of Action to be Taken:

Specific Steps Required

	Persons Assigned	Projected Completion Date	Problems/ Delays Encountered	Actual Completion Date
1.				
2.				
3.				
4.				

GENERAL ENVIRONMENTAL CONTROLS

PURPOSE

The purpose of this lesson is to acquaint the participant with Subpart J. General Environmental Controls.

OBJECTIVES

1. List three of the topics covered under both OSHA and DOE order sanitation requirements.
2. State one of the most commonly cited violations of Subpart J.
3. List the three classifications and color coding schemes of accident prevention signs.

REFERENCES

1. 29 CFR 1910 General Safety and Health Standards, Department of Labor

DURATION

One hour

INSTRUCTOR MATERIALS

Course manual with instructors notes
Overhead projector/viewer assembly

Battelle
Pacific Northwest Laboratory is operated for the U.S. Department of Energy by Battelle Memorial Institute.

General Environmental Controls Subpart J

Objectives

1. List 3 of the topics covered under both OSHA and DOE Order sanitation requirements.
2. State 1 of the most commonly cited violations of Subpart J.
3. List the 3 classifications and color coding schemes of accident preventions signs.

Sanitation—1910.141(a)(3)

- Housekeeping:
  - Workrooms shall be maintained as clean as possible
  - Floors shall be kept dry. In wet processes, drainage and false floors, platforms or mats shall be used
  - Passageways shall be kept free of protruding nails, boards and unnecessary holes

Sanitation—1910.141(a)

(4) Waste Disposal: Waste shall be disposed of in a manner which does not create a menace to health, and disposed of in a covered, leak-free container.

(5) Vermin Control: Workplaces shall be maintained to prevent infestation by rodents. If they are found, an extermination program is required.

Water Supply—1910.141(b)

- Potable water shall:
  - be provided in all places of employment for drinking, washing, cooking, and personal service rooms
  - be dispensed under sanitary conditions and be equipped with a tap

Water Supply—1910.141(b)

- Non-potable water systems shall:
  - be posted or clearly marked to indicate that it is unsafe for drinking, washing, cooking, etc.
  - be constructed so as to prevent backflow or backsiphonage into a potable water system

Toilet Facilities—1910.141(c)

- Toilet facilities shall:
  - be provided in all places of employment
  - be based on the number of employees of each sex
  - be separate for each sex
  - contain water closets which contain a door and walls to assure privacy

Lavatories—1910.141(d)(2)

- Lavatories shall:
  - be made available in all places of employment
  - be provided with hot and cold running water
  - be provided with hand soap
  - be provided with individual hand towels or clean continuous cloth toweling

Showers—1910.141(d)(3)

- Where showers are required:
  - one shower shall be provided for each 10 employees of each sex who are required to shower during the same shift
  - soap shall be provided
  - they shall be provided with hot and cold water feeding a common line

Change Rooms—1910.141(e)

- Change rooms shall be provided when protective clothing is required. Separate storage facilities for street clothes and protective clothing shall be provided

Food and Beverage Consumption on Premises—1910.141(g)

- Where food and beverage consumption occurs on work premises:
  - it is not allowed in toilet room or areas which contain toxic material
  - receptacles shall be provided for the disposal of waste food, be emptied at least once each working day, and maintained in a sanitary condition
  - food may not be stored in toilet rooms or areas which contain toxic materials

Food Handling—1910.141(h)

- Food service facilities shall:
  - use sound hygienic principles
  - serve food in such a manner as to protect against contamination

Safety Color Code for Marking Physical Hazards

- 1910.144(a)(1) requires that the color red be used to identify:
  - Fire protection equipment and apparatus
  - Danger
  - Stop

Safety Color Code for Marking Physical Hazards

- 1910.144 requires that the color yellow be used to identify:
  - Caution
  - Physical hazards such as "striking against," "stumbling," "falling," "tripping," and "caught in between."

Specifications for Accident Prevention Signs and Tags—1910.145

- Classification of Signs:
  - Danger
  - Caution
  - Safety Instruction

Sign Colors

- Danger Signs:
  - Red, white and black
- Caution Signs:
  - Yellow background; black panel with yellow letters
- Safety Instruction signs:
  - White background; green panel with white letters

Slow-Moving Vehicle Emblem 1910.145(d)(10)

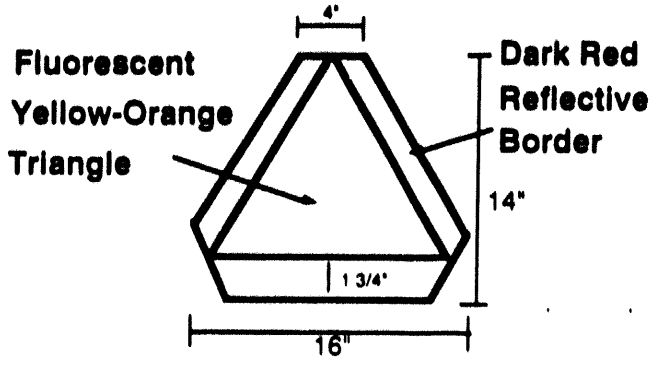

Biological Hazard Signs

- 1910.145 (e)(4) Used to signify the actual or potential presence of a biohazard, and to identify equipment, containers, rooms, materials, experimental animals, or combinations thereof, which contain, or are contaminated with viable hazardous agents

Accident Prevention Tags—1910.145(f)

- Accident prevention tags shall be used:
  - as a means to prevent accidental injury or illness to employees exposed to hazardous conditions, equipment or operations which are not readily apparent
  - until the identified hazard is eliminated
  - only where other signs, guarding or protection are not in use

Biological Hazard—1910.145(f)(8)(i)

- Identifies the actual or potential presence of a biological hazard in equipment, containers, rooms, or experimental animals
- Tags shall use the biological hazard symbol configuration
- Recommended colors are fluorescent orange or orange-red, with lettering or symbols in a contrasting color

Most Frequently Cited Violations

- 1910.141(a)(4)(ii)
- 1910.141(g)(2)
- 1910.141(a)(4)(i)
- 1910.145(f)(8)(i)
- 1910.145(c)(3)

1910.146 PERMIT REQUIRED CONFINED SPACES

TERMINAL OBJECTIVE

The purpose of this lesson is to acquaint the participant with the provisions of the Notice of Proposed Rulemaking regarding confined spaces, 29 CFR 1910.146.

ENABLING OBJECTIVES

1. Given a situation involving potential permit required confined spaces, apply correct standards from 29 CFR 1910.146. Determine if the situation is in compliance with appropriate regulations.
2. State the duties and responsibilities of a confined space entry attendant.
3. List three conditions under which the attendant must order evacuation of the confined space.
4. State three responsibilities of an individual who authorizes a confined space entry.

REFERENCES

1. 29 CFR 1910.146 Permit Required Confined Spaces
2. 29 CFR 1910 General Safety and Health Standards, Department of Labor
3. Accident Prevention Manual for Industrial Operations: 9th ed. Vol I Engineering and Technology, National Safety Council
4. Accident Prevention Manual for Industrial Operations: 9th ed. Vol II Administration and Programs, National Safety council
5. 29 CFR 1926 Safety and Health Regulations for Construction, Department of Labor
6. Supervisors' Safety Manual, 7th ed. National Safety Council
7. "Safety Requirements for Working in Tanks and other Confined Spaces" American National Standards Institute (ANSI) Z117.1-1989.

DURATION

Two hours

INSTRUCTOR MATERIALS

Course manual with instructors notes
Overhead projector/viewer assembly
VCR/TV

Battelle
Pacific Northwest Laboratory is operated for the U.S. Department of Energy by Battelle Memorial Institute.

1910.146 Permit Required Confined Spaces—A Final Standard January 14, 1993

Confined Spaces

Objectives

1. Given a situation involving potential permit required confined spaces, apply correct standards from 29 CFR 1910.146. Determine if the situation is in compliance with appropriate regulations.
2. State the duties and responsibilities of a confined space entry attendant.

Confined Spaces

Objectives

3. List three conditions under which the attendant must order evacuation of the confined space.
4. State three responsibilities of an individual who authorizes a confined space entry.

Permit Required Confined Space

Signed	January 6, 1993
Published	January 14, 1993
Effective Date	April 15, 1993

Permit Required Confined Space

- 1910.146(b) Confined means a space that:
  - is large enough so that an employee can enter and work
  - has limited means for entry or exit
  - is not designed for continuous occupancy

Characteristics of a Permit Required Confined Space

- Contains or has potential for hazardous atmosphere
- Contains the potential for engulfment
- Has a configuration such that an entrant could be trapped or asphyxiated
- Contains any other recognized serious Safety or Health Hazard

Confined Space Entry

- 1910.146(b)
  - Passing through an opening into a permit required confined space
  - Entry has occurred as soon as any part of entrants' body breaks the plane of opening into the space

Hazardous Atmosphere

- 1910.146(b)
  - May expose employees to risk of death or incapacitation
  - May impair ability of self rescue

Hazardous Atmosphere

- 1910.146(b)
  - Flammable gas, vapor or mist in excess of 10% of its LEL
  - Combustible dust at or above LEL
  - Oxygen below 19.5% or above 23.5%
  - Airborne concentrations with potential to exceed PELs
  - Any IDLH condition

General Requirements 1910.146(c)

(1) Hazard identification
(2) Hazard control
(3) Permit system
(4) Employee information
(5) Prevention of unauthorized entry

General Requirements

(6) Employee training
(7) Equipment
(8) Rescue
(9) Protection from external hazards
(10) Duty to other employers

General Requirements

(10) Contractor/Multi-Employer Coordination
- Identified hazards
- Precautions and procedures
- Coordinate entry operations
- Debrief at conclusion of entry operations

1910.146(d) Permit Required Confined Space Program

- Prevent unauthorized entry
- Identify and evaluate hazards prior to entry
- Develop and implement procedures and practices for SAFE permit entry operations

Permit Required Confined Space Program

- Testing/monitoring equipment and procedures
- Rescue services and communication
- Rescue equipment provided
- Communication equipment and procedures
- PPE

Permit Required Confined Space Program

- Lighting
- Barriers; shields for traffic/pedestrians
- Provisions for safe entry; exit
- Any other necessary equipment

Permit Required Confined Space Program

- Shall include the following information:
  - Hazards of the space
  - Isolation measures
  - Acceptable environmental conditions
  - Hazard Controls
    - LOTO
    - Flushing lines or vessels
    - Ventilating or inerting

Permit Required Confined Space Program

- Testing before entry is authorized
  - Use direct reading equipment
  - Oxygen FIRST
  - Combustibles, gases and vapors
  - Toxics, gases and vapors

Permit Required Confined Space Program

- Attendants required for entry
- Develop and implement permit system that includes
  - preparation
  - issuance
  - use
  - cancellation
- Annual program review

1910.146(f)
Confined Space Entry Permits

- Identity of the permit space
- Duration of permit
- Purpose and date of entry
- Authorized entrants and eligible attendants (by name)
- Name and authorizing signature

Confined Space Entry Permits

- Hazards of space
- Hazard control measures
- Acceptable entry conditions
- Test results

Confined Space Entry Permits

- Rescue and emergency services
- PPE required
- Other necessary information
- Other permit information (Hot work, LOTO)

1910.146(g)
Training and Duties of Entrants

- Before assignment
- Before change in duties
- Whenever operations change
- Whenever deviations from procedures occur
- Inadequacies in program are noted

Training and Duties of Entrants

- Establish employee proficiency
- Employer certification

Training and Duties of Entrants

(1) Hazard recognition

(2) Communication

(3) Personal Protective Equipment (PPE)

(4) Self-Rescue

Training and Duties of Attendants

- Attendants shall:
  - Remain outside permit space at all times during entry operations
  - Maintain an accurate count of all persons in the space
  - Receive training
    - Hazard recognition
    - Monitor activities for safety

Attendant Communication

- Maintain effective and continuous contact
- Immediate evacuation shall be ensured when attendant:
  - Observes a prohibited condition
  - Detects behavioral effects of exposure
  - Detects an uncontrolled hazard in the permit space

1910.146(j)
Duties of Entry Supervisors

- Know hazards
- Inspect permit before signing
- Ensure entry operations follow permit
- Deal with unauthorized entry
- Cancel permit if conditions warrant
- Removes unauthorized individuals

1910.146(k)
Rescue and Emergency Services

- DON'T BECOME ANOTHER VICTIM!!
- 60% of all fatalities are rescuers!
- Notify emergency personnel
- Use rescue equipment provided

Rescue and Emergency Services

- All employers with employees entering permit required confined spaces must provide for rescue

Rescue and Emergency Services

- Rescue Service
  - Trained for assigned duties
  - Properly equipped
  - Annual practice rescues

Rescue and Emergency Services

- Membership Qualifications:
  - all trained in basic first aid and CPR
  - at least one member with current first aid and CPR certification

Rescue and Emergency Services

- Retrieval systems or methods required
- Chest or full body harnesses with retrieval line
- Wristlets authorized in limited situations
- Retrieval line attached to mechanical device or fixed point outside space
- Mechanical device required for spaces deeper than 5 feet

Found in Reports of OSHA Fatality/Catastrophe Investigations", Washington, D.C., July 1985 (Ex. 13–15).

U.S. Department of Labor. Occupational and Health Administration. Directorate of Technical Support. "Selected Occupational Fatalities Related to Fire and/or Explosion in Confined Work Spaces as Found in Reports of OSHA Fatality/Catastrophe Investigations", Washington, D.C., April 1982 (Ex. 13–10).

5. OSHA Integrated Management Information System. Fatality/Catastrophe Database. OSHA Office of Management Data Systems.

VII. Federalism

This regulation has been reviewed in accordance with Executive Order 12612 regarding Federalism. This order requires that agencies, to the extent possible, refrain from limiting state policy options and consult with states prior to taking any action. Agencies may act only when there is clear constitutional authority and the presence of a problem of national scope. The order provides for preemption of state law only if there is a clear congressional intent for the Agency to do so. Any such preemption is to be limited to the extent possible.

Section 18 of the Occupational Safety and Health Act of 1970 expresses Congress' clear intent to preempt state laws relating to issues on which Federal OSHA has promulgated occupational safety and health standards. Under the Act, a state can avoid preemption only if it submits, and obtains Federal approval of, a plan for the development of such standards and their enforcement. Occupational safety and health standards developed by such Plan-States must, among other things, be at least as effective in providing safe and healthful employment and places of employment as Federal Standards. Where such standards are applicable to products distributed or used in interstate commerce, they may not unduly burden commerce and must be justified by compelling local conditions (See Section 18(c)(2) of the OSH Act).

This regulation is drafted so that employees in every state would be protected by general, performance-oriented standards. To the extent that there are state or regional peculiarities caused by the terrain, the climate or other factors, states would be able, under the OSH Act, to develop their own state standards to deal with any special problems. And, under the Act, if a state develops an approved state program, it could make additional requirements in its standards. Moreover, the performance nature of this standard, and by itself, allows for flexibility by allowing employers to provide as much safety as possible using varying methods consonant with conditions in each state.

In short, there is a clear national problem related to occupational safety and health concerning entry into confined spaces. Those states which elect to participate under the statute would not be preempted by this regulation and would be able to address special, local conditions within the framework provided by this performance-oriented standard.

OSHA notes that California, Kentucky, Maryland, Michigan, New Jersey, and Virginia currently have regulations dealing with confined space entry. Of these six state regulations, none would be preempted. New Jersey is not a state-plan state, but their confined space standard applies only to public (state and local government) employees. An analysis of state confined space rules and procedures is contained in Section VI, Summary of the Final Regulatory Impact Analysis and Regulatory Flexibility Analysis, earlier in this preamble.

VIII. State Plan States

The 25 states and territories with their own OSHA-approved occupational safety and health plans must adopt a comparable standard within six months of the publication date of this final standard. These 25 states are: Alaska, Arizona, California, Connecticut (for state and local government employees only), Hawaii, Indiana, Iowa, Kentucky, Maryland, Michigan, Minnesota, Nevada, New Mexico, New York (for state and local government employees only), North Carolina, Oregon, Puerto Rico, South Carolina, Tennessee, Utah, Vermont, Virginia, Virgin Islands, Washington and Wyoming. Until such time as a state standard is promulgated, Federal OSHA will provide interim enforcement assistance, as appropriate, in these states.

List of Subjects in 29 CFR Part 1910

Attendant, Confined Spaces, Entry permit system, Hazardous atmospheres, Hazardous materials, Incorporation by reference, Monitoring, Occupational safety and health, Permits, Personal protective equipment, Rescue equipment, Respiratory protection, Retrieval lines, Safety, Signs, Tags, Tools, Welding.

IX. Authority

This document was prepared under the direction of Dorothy L. Strunk, Acting Assistant Secretary of Labor for Occupational Safety and Health, U.S. Department of Labor, 200 Constitution Avenue, N.W., Washington, D.C. 20210.

Accordingly, pursuant to sections 6(b) and 8 of the Occupational Safety and Health Act of 1970 (29 U.S.C. 655, 657), Secretary of Labor's Order No. 1–90 (55 FR 9033), and 29 CFR Part 1911, Title 29, Chapter XVII, of the Code of Federal Regulations is amended as follows.

Signed at Washington, D.C., this 6th day of January, 1993.

Dorothy L. Strunk

Acting Assistant Secretary of Labor

PART 1910—OCCUPATIONAL SAFETY AND HEALTH STANDARDS

1. The authority citation for Subpart J of Part 1910 is revised to read as follows:

AUTHORITY: Secs. 4, 6, and 8, Occupational Safety and Health Act of 1970, 29 USC 653, 655, 657; Secretary of Labor's Order No. 12–71 (36 FR 8754), 8–76 (41 FR 25059), 9–83 (48 FR 35736) or 1–90 (55 FR 9033), as applicable.

Sections 1910.141, 1910.142, 1910.145, 1910.146, and 1910.147 also issued under 29 CFR Part 1911.

2. Section 1910.146 is added to read as follows:

§1910.146 Permit-required confined spaces.

(a) *Scope and application.* This section contains requirements for practices and procedures to protect employees in general industry from the hazards of entry into permit-required confined spaces. This section does not apply to agriculture, to construction, or to shipyard employment (Parts 1928, 1926, and 1915 of this chapter, respectively).

(b) *Definitions.*

Acceptable entry conditions means the conditions that must exist in a permit space to allow entry and to ensure that employees involved with a permit-required confined space entry can safely enter into and work within the space.

Attendant means an individual stationed outside one or more permit spaces who monitors the authorized entrants and who performs all attendant's duties assigned in the employer's permit space program.

Authorized entrant means an employee who is authorized by the employer to enter a permit space.

Blanking or blinding means the absolute closure of a pipe, line, or duct by the fastening of a solid plate (such as a spectacle blind or a skillet blind) that completely covers the bore and that is capable of withstanding the maximum pressure of the pipe, line, or duct with no leakage beyond the plate.

Confined space means a space that:

(1) Is large enough and so configured that an employee can bodily enter and perform assigned work; and

(2) Has limited or restricted means for entry or exit (for example, tanks, vessels, silos, storage bins, hoppers, vaults, and pits are spaces that may have limited means of entry.); and

(3) Is not designed for continuous employee occupancy.

Double block and bleed means the closure of a line, duct, or pipe by closing and locking or tagging two in-line valves and by opening and locking or tagging a drain or vent valve in the line between the two closed valves.

Emergency means any occurrence (including any failure of hazard control or monitoring equipment) or event internal or external to the permit space that could endanger entrants.

Engulfment means the surrounding and effective capture of a person by a liquid or finely divided (flowable) solid substance that can be aspirated to cause death by filling or plugging the respiratory system or that can exert enough force on the body to cause death by strangulation, constriction, or crushing.

Entry means the action by which a person passes through an opening into a permit-required confined space. Entry includes ensuing work activities in that space and is considered to have occurred as soon as any part of the entrant's body breaks the plane of an opening into the space.

Entry permit (permit) means the written or printed document that is provided by the employer to allow and control entry into a permit space and that contains the information specified in paragraph (f) of this section.

Entry supervisor means the person (such as the employer, foreman, or crew chief) responsible for determining if acceptable entry conditions are present at a permit space where entry is planned, for authorizing entry and overseeing entry operations, and for terminating entry as required by this section.

Note: An entry supervisor also may serve as an attendant or as an authorized entrant, as long as that person is trained and equipped as required by this section for each role he or she fills. Also, the duties of entry supervisor may be passed from one individual to another during the course of an entry operation.

Hazardous atmosphere means an atmosphere that may expose employees to the risk of death, incapacitation, impairment of ability to self-rescue (that is, escape unaided from a permit space), injury, or acute illness from one or more of the following causes:

(1) Flammable gas, vapor, or mist in excess of 10 percent of its lower flammable limit (LFL);

(2) Airborne combustible dust at a concentration that meets or exceeds its LFL;

Note: This concentration may be approximated as a condition in which the dust obscures vision at a distance of 5 feet (1.52 m) or less.

(3) Atmospheric oxygen concentration below 19.5 percent or above 23.5 percent;

(4) Atmospheric concentration of any substance for which a dose or a permissible exposure limit is published in Subpart G, *Occupational Health and Environmental Control*, or in Subpart Z, *Toxic and Hazardous Substances*, of this part and which could result in employee exposure in excess of its dose or permissible exposure limit;

Note: An atmospheric concentration of any substance that is not capable of causing death, incapacitation, impairment of ability to self-rescue, injury, or acute illness due to its health effects is not covered by this provision.

(5) Any other atmospheric condition that is immediately dangerous to life or health.

Note: For air contaminants for which OSHA has not determined a dose or permissible exposure limit, other sources of information, such as Material Safety Data Sheets that comply with the Hazard Communication Standard, §1910.1200 of this part, published information, and internal documents can provide guidance in establishing acceptable atmospheric conditions.

Hot work permit means the employer's written authorization to perform operations (for example, riveting, welding, cutting, burning, and heating) capable of providing a source of ignition.

Immediately dangerous to life or health (IDLH) means any condition that poses an immediate or delayed threat to life or that would cause irreversible adverse health effects or that would interfere with an individual's ability to escape unaided from a permit space.

Note: Some materials—hydrogen fluoride gas and cadmium vapor, for example—may produce immediate transient effects that, even if severe, may pass without medical attention, but are followed by sudden, possibly fatal collapse 12–72 hours after exposure. The victim "feels normal" from recovery from transient effects until collapse. Such materials in hazardous quantities are considered to be "immediately" dangerous to life or health.

Inerting means the displacement of the atmosphere in a permit space by a noncombustible gas (such as nitrogen) to such an extent that the resulting atmosphere is noncombustible.

Note: This procedure produces an IDLH oxygen-deficient atmosphere.

Isolation means the process by which a permit space is removed from service and completely protected against the release of energy and material into the space by such means as: blanking or blinding; misaligning or removing sections of lines, pipes, or ducts; a double block and bleed system; lockout or tagout of all sources of energy; or blocking or disconnecting all mechanical linkages.

Line breaking means the intentional opening of a pipe, line, or duct that is or has been carrying flammable, corrosive, or toxic material, an inert gas, or any fluid at a volume, pressure, or temperature capable of causing injury.

Non-permit confined space means a confined space that does not contain or, with respect to atmospheric hazards, have the potential to contain any hazard capable of causing death or serious physical harm.

Oxygen deficient atmosphere means an atmosphere containing less than 19.5 percent oxygen by volume.

Oxygen enriched atmosphere means an atmosphere containing more than 23.5 percent oxygen by volume.

Permit-required confined space (permit space) means a confined space that has one or more of the following characteristics:

(1) Contains or has a potential to contain a hazardous atmosphere;

(2) Contains a material that has the potential for engulfing an entrant;

(3) Has an internal configuration such that an entrant could be trapped or asphyxiated by inwardly converging walls or by a floor which slopes downward and tapers to a smaller cross-section; or

(4) Contains any other recognized serious safety or health hazard.

Permit-required confined space program (permit space program) means the employer's overall program for controlling, and, where appropriate, for protecting employees from, permit space hazards and for regulating employee entry into permit spaces.

Permit system means the employer's written procedure for preparing and issuing permits for entry and for returning the permit space to service following termination of entry.

Prohibited condition means any condition in a permit space that is not allowed by the permit during the period when entry is authorized.

Rescue service means the personnel designated to rescue employees from permit spaces.

Retrieval system means the equipment (including a retrieval line, chest or full-body harness, wristlets, if appropriate, and lifting device or anchor) used for non-entry rescue of persons from permit spaces.

Testing means the process by which the hazards that may confront entrants of a permit space are identified and evaluated. Testing includes specifying the tests that are to be performed in the permit space.

Note: Testing enables employers both to devise and implement adequate control measures for the protection of authorized entrants and to determine if acceptable entry conditions are present immediately prior to, and during, entry.

(c) *General requirements.* (1) The employer shall evaluate the workplace to determine if any spaces are permit-required confined spaces.

Note: Proper application of the decision flow chart in Appendix A to §1910.146 would facilitate compliance with this requirement.

(2) If the workplace contains permit spaces, the employer shall inform exposed employees, by posting danger signs or by any other equally effective means, of the existance and location of and the danger posed by the permit spaces.

Note: A sign reading "DANGER—PERMIT-REQUIRED CONFINED SPACE, DO NOT ENTER" or using other similar language would satisfy the requirement for a sign.

(3) If the employer decides that its employees will not enter permit spaces, the employer shall take effective measures to prevent its employees from entering the permit spaces and shall comply with paragraphs (c)(1), (c)(2), (c)(6), and (c)(8) of this section.

(4) If the employer decides that its employees will enter permit spaces, the employer shall develop and implement a written permit space entry program that complies with this section. The written program shall be available for inspection by employees and their authorized representatives.

(5) An employer may use the alternate procedures specified in paragraph (c)(5)(ii) of this section for entering a permit space under the conditions set forth in paragraph (c)(5)(i) of this section.

(i) An employer whose employees enter a permit space need not comply with paragraphs (d) through (f) and (h) through (k) of this section, provided that:

(A) The employer can demonstrate that the only hazard posed by the permit space is an actual or potential hazardous atmosphere;

(B) The employer can demonstrate that continuous forced air ventilation alone is sufficient to maintain that permit space safe for entry;

(C) The employer develops monitoring and inspection data that supports the demonstrations required by paragraphs (c)(5)(i)(A) and (c)(5)(i)(B) of this section;

(D) If an initial entry of the permit space is necessary to obtain the data required by paragraph (c)(5)(i)(C) of this section, the entry is performed in compliance with paragraphs (d) through (k) of this section;

(E) The determinations and supporting data required by paragraphs (c)(5)(i)(A), (c)(5)(i)(B), and (c)(5)(i)(C) of this section are documented by the employer and are made available to each employee who enters the permit space under the terms of paragraph (c)(5) of this section; and

(F) Entry into the permit space under the terms of paragraph (c)(5)(i) of this section is performed in accordance with the requirements of paragraph (c)(5)(ii) of this section.

Note: See paragraph (c)(7) of this section for reclassification of a permit space after all hazards within the space have been eliminated.

(ii) The following requirements apply to entry into permit spaces that meet the conditions set forth in paragraph (c)(5)(i) of this section.

(A) Any conditions making it unsafe to remove an entrance cover shall be eliminated before the cover is removed.

(B) When entrance covers are removed, the opening shall be promptly guarded by a railing, temporary cover, or other temporary barrier that will prevent an accidental fall through the opening and that will protect each employee working in the space from foreign objects entering the space.

(C) Before an employee enters the space, the internal atmosphere shall be tested, with a calibrated direct-reading instrument, for the following conditions in the order given:

(1) Oxygen content,

(2) Flammable gases and vapors, and

(3) Potential toxic air contaminants.

(D) There may be no hazardous atmosphere within the space whenever any employee is inside the space.

(E) Continuous forced air ventilation shall be used, as follows:

(1) An employee may not enter the space until the forced air ventilation has eliminated any hazardous atmosphere;

(2) The forced air ventilation shall be so directed as to ventilate the immediate areas where an employee is or will be present within the space and shall continue until all employees have left the space;

(3) The air supply for the forced air venulation shall be from a clean source and may not increase the hazards in the space.

(F) The atmosphere within the space shall be periodically tested as necessary to ensure that the continuous forced air venulation is preventing the accumulation of a hazardous atmosphere.

(G) If a hazardous atmosphere is detected during entry:

(1) Each employee shall leave the space immediately;

(2) The space shall be evaluated to determine how the hazardous atmosphere developed; and

(3) Measures shall be implemented to protect employees from the hazardous atmosphere before any subsequent entry takes place.

(H) The employer shall verify that the space is safe for entry and that the measures required by paragraph (c)(5)(ii) of this section have been taken, through a written certification that contains the date, the location of the space, and the signature of the person providing the certification. The certification shall be made before entry and shall be made available to each employee entering the space.

(6) When there are changes in the use or configuration of a non-permit confined space that might increase the hazards to entrants, the employer shall reevaluate that space and, if necessary, reclassify it as a permit-required confined space.

(7) A space classified by the employer as a permit-required confined space may be reclassified as a non-permit confined space under the following procedures:

(i) If the permit space poses no actual or potential atmospheric hazards and if all hazards within the space are eliminated without entry into the space, the permit space may be reclassified as a non-permit confined space for as long as the non-atmospheric hazards remain eliminated.

(ii) If it is necessary to enter the permit space to eliminate hazards, such entry shall be performed under paragraphs (d) through (k) of this section. If testing and inspection during that entry demonstrate that the hazards within the permit space have been eliminated, the permit space may be reclassified as a non-permit confined space for as long as the hazards remain eliminated.

Note: Control of atmospheric hazards through forced air ventilation does not constitute elimination of the hazards. Paragraph (c)(5) covers permit space entry where the employer can demonstrate that forced air venulation alone will control all hazards in the space.

(iii) The employer shall document the basis for determining that all hazards in a permit space have been eliminated, through a certification that contains the date, the location of the space, and the signature of the person making the determination. The certification shall be made available to each employee entering the space.

(iv) If hazards arise within a permit space that has been declassified to a non-permit space under paragraph (c)(7) of this section, each employee in the space shall exit the space. The employer shall then reevaluate the space and determine whether it must be reclassified as a permit space, in accordance with other applicable provisions of this section.

(8) When an employer (host employer) arranges to have employees of another employer (contractor) perform work that involves permit space entry, the host employer shall:

(i) Inform the contractor that the workplace contains permit spaces and that permit space entry is allowed only through compliance with an permit space program meeting the requirements of this section;

(ii) Apprise the contractor of the elements, including the hazards identified and the host employer's experience with the space, that make the space in question a permit space;

(iii) Apprise the contractor of any precautions or procedures that the host employer has implemented for the protection of employees in or near permit spaces where contractor personnel will be working;

(iv) Coordinate entry operations with the contractor, when both host employer personnel and contractor personnel will be working in or near permit spaces, as required by paragraph (d)(11) of this section; and

(v) Debrief the contractor at the conclusion of the entry operations regarding the permit space program followed and regarding any hazards confronted or created in permit spaces during entry operations.

(9) In addition to complying with the permit space requirements that apply to all employers, each contractor who is retained to perform permit space entry operations shall:

(i) Obtain any available information regarding permit space hazards and entry operations from the host employer;

(ii) Coordinate entry operations with the host employer, when both host employer personnel and contractor personnel will be working in or near permit spaces, as required by paragraph (d)(11) of this section; and

(iii) Inform the host employer of the permit space program that the contractor will follow and of any hazards confronted or created in permit spaces, either through a debriefing or during the entry operation.

(d) *Permit-required confined space program.* Under the permit-required confined space program required by paragraph (c)(4) of this section, the employer shall:

(1) Implement the measures necessary to prevent unauthorized entry;

(2) Identify and evaluate the hazards of permit spaces before employees enter them;

(3) Develop and implement the means, procedures, and practices necessary for safe permit space entry operations, including, but not limited to, the following:

(i) Specifying acceptable entry conditions;

(ii) Isolating the permit space;

(iii) Purging, inerting, flushing, or ventilating the permit space as necessary to eliminate or control atmospheric hazards;

(iv) Providing pedestrian, vehicle, or other barriers as necessary to protect entrants from external hazards; and

(v) Verifying that conditions in the permit space are acceptable for entry throughout the duration of an authorized entry.

(4) Provide the following equipment (specified in paragraphs (d)(4)(i) through (d)(4)(ix) of this section) at no cost to employees, maintain that equipment properly, and ensure that employees use that equipment properly:

(i) Testing and monitoring equipment needed to comply with paragraph (d)(5) of this section;

(ii) Ventilating equipment needed to obtain acceptable entry conditions;

(iii) Communications equipment necessary for compliance with paragraphs (h)(3) and (i)(5) of this section;

(iv) Personal protective equipment insofar as feasible engineering and work practice controls do not adequately protect employees;

(v) Lighting equipment needed to enable employees to see well enough to work safely and to exit the space quickly in an emergency;

(vi) Barriers and shields as required by paragraph (d)(3)(iv) of this section;

(vii) Equipment, such as ladders, needed for safe ingress and egress by authorized entrants;

(viii) Rescue and emergency equipment needed to comply with paragraph (d)(9) of this section, except to the extent that the equipment is provided by rescue services; and

(ix) Any other equipment necessary for safe entry into and rescue from permit spaces.

(5) Evaluate permit space conditions as follows when entry operations are conducted:

(i) Test conditions in the permit space to determine if acceptable entry conditions exist before entry is authorized to begin, except that, if isolation of the space is infeasible because the space is large or is part of a continuous system (such as a sewer), pre-entry testing shall be performed to the extent feasible before entry is authorized and, if entry is authorized, entry conditions shall be continuously monitored in the areas where authorized entrants are working;

(ii) Test or monitor the permit space as necessary to determine if acceptable entry conditions are being maintained during the course of entry operations; and

(iii) When testing for atmospheric hazards, test first for oxygen, then for combustible gases and vapors, and then for toxic gases and vapors.

Note: Atmospheric testing conducted in accordance with Appendix B to §1910.146 would be considered as satisfying the requirements of this paragraph. For permit space operations in sewers, atmospheric testing conducted in accordance with Appendix B, as supplemented by Appendix E to §1910.146, would be considered as satisfying the requirements of this paragraph.

(6) Provide at least one attendant outside the permit space into which entry is authorized for the duration of entry operations;

Note: Attendants may be assigned to monitor more than one permit space provided the duties described in paragraph (i) of this section can be effectively performed for each permit space that is monitored. Likewise, attendants may be stationed at any location outside the permit space to be monitored as long as the duties described in paragraph (i) of this section can be effectively performed for each permit space that is monitored.

(7) If multiple spaces are to be monitored by a single attendant, include in the permit program the means and procedures to enable the attendant to respond to an emergency affecting one or more of the permit spaces being monitored without distraction from the attendant's responsibilities under paragraph (i) of this section;

(8) Designate the persons who are to have active roles (as, for example, authorized entrants, attendants, entry supervisors, or persons who test or monitor the atmosphere in a permit space) in entry operations, identify the duties of each such employee, and provide each such employee with the

training required by paragraph (g) of this section;

(9) Develop and implement procedures for summoning rescue and emergency services, for rescuing entrants from permit spaces, for providing necessary emergency services to rescued employees, and for preventing unauthorized personnel from attempting a rescue;

(10) Develop and implement a system for the preparation, issuance, use, and cancellation of entry permits as required by this section;

(11) Develop and implement procedures to coordinate entry operations when employees of more than one employer are working simultaneously as authorized entrants in a permit space, so that employees of one employer do not endanger the employees of any other employer;

(12) Develop and implement procedures (such as closing off a permit space and canceling the permit) necessary for concluding the entry after entry operations have been completed;

(13) Review entry operations when the employer has reason to believe that the measures taken under the permit space program may not protect employees and revise the program to correct deficiencies found to exist before subsequent entries are authorized; and

Note: Examples of circumstances requiring review of the permit-required confined space program are: any unauthorized entry of a permit space, the detection of a permit space hazard not covered by the permit, the detection of a condition prohibited by the permit, the occurrence of an injury or near-miss during entry, a change in the use or configuration of a permit space, and employee complaints about the effectiveness of the program.

(14) Review the permit-required confined space program, using the canceled permits retained under paragraph (e)(6) of this section within 1 year after each entry and revise the program as necessary, to ensure that employees participating in entry operations are protected from permit space hazards.

Note: Employers may perform a single annual review covering all entries performed during a 12-month period. If no entry is performed during a 12-month period, no review is necessary.

Appendix C to §1910.146 presents examples of permit entry programs that are considered to comply with the requirements of paragraph (d) of this section.

(e) *Permit system.* (1) Before entry is authorized, the employer shall document the completion of measures required by paragraph (d)(3) of this section by preparing an entry permit.

Note: Appendix D to §1910.146 presents examples of permits whose elements are considered to comply with the requirements of this section.

(2) Before entry begins, the entry supervisor identified on the permit shall sign the entry permit to authorize entry.

(3) The completed permit shall be made available at the time of entry to all authorized entrants, by posting it at the entry portal or by any other equally effective means, so that the entrants can confirm that pre-entry preparations have been completed.

(4) The duration of the permit may not exceed the time required to complete the assigned task or job identified on the permit in accordance with paragraph (f)(2) of this section.

(5) The entry supervisor shall terminate entry and cancel the entry permit when:

(i) The entry operations covered by the entry permit have been completed; or

(ii) A condition that is not allowed under the entry permit arises in or near the permit space.

(6) The employer shall retain each canceled entry permit for at least 1 year to facilitate the review of the permit-required confined space program required by paragraph (d)(14) of this section. Any problems encountered during an entry operation shall be noted on the pertinent permit so that appropriate revisions to the permit space program can be made.

(f) *Entry permit.* The entry permit that documents compliance with this section and authorizes entry to a permit space shall identify:

(1) The permit space to be entered;

(2) The purpose of the entry;

(3) The date and the authorized duration of the entry permit;

(4) The authorized entrants within the permit space, by name or by such other means (for example, through the use of rosters or tracking systems) as will enable the attendant to determine quickly and accurately, for the duration of the permit, which authorized entrants are inside the permit space;

Note: This requirement may be met by inserting a reference on the entry permit as to the means used, such as a roster or tracking system, to keep track of the authorized entrants within the permit space.

(5) The personnel, by name, currently serving as attendants;

(6) The individual, by name, currently serving as entry supervisor, with a space for the signature or initials of the entry supervisor who originally authorized entry;

(7) The hazards of the permit space to be entered;

(8) The measures used to isolate the permit space and to eliminate or control permit space hazards before entry;

Note: Those measures can include the lockout or tagging of equipment and procedures for purging, inerting, ventilating, and flushing permit spaces.

(9) The acceptable entry conditions;

(10) The results of initial and periodic tests performed under paragraph (d)(5) of this section, accompanied by the names or initials of the testers and by an indication of when the tests were performed;

(11) The rescue and emergency services that can be summoned and the means (such as the equipment to use and the numbers to call) for summoning those services;

(12) The communication procedures used by authorized entrants and attendants to maintain contact during the entry;

(13) Equipment, such as personal protective equipment, testing equipment, communications equipment, alarm systems, and rescue equipment, to be provided for compliance with this section;

(14) Any other information whose inclusion is necessary, given the circumstances of the particular confined space, in order to ensure employee safety; and

(15) Any additional permits, such as for hot work, that have been issued to authorize work in the permit space.

(g) *Training.* (1) The employer shall provide training so that all employees whose work is regulated by this section acquire the understanding, knowledge, and skills necessary for the safe performance of the duties assigned under this section.

(2) Training shall be provided to each affected employee:

(i) Before the employee is first assigned duties under this section;

(ii) Before there is a change in assigned duties;

(iii) Whenever there is a change in permit space operations that presents a hazard about which an employee has not previously been trained;

(iv) Whenever the employer has reason to believe either that there are deviations from the permit space entry procedures required by paragraph (d)(3) of this section or that there are inadequacies in the employee's knowledge or use of these procedures.

(3) The training shall establish employee proficiency in the duties required by this section and shall introduce new or revised procedures, as necessary, for compliance with this section.

(4) The employer shall certify that the training required by paragraphs (g)(1)

:rough (g)(3) of this section has been :ccomplished. The certification shall :ntain each employee's name, the gnatures or initials of the trainers, and :e dates of training. The certification :ail be available for inspection by nployees and their authorized presentatives.

(h) *Duties of authorized entrants.* The nployer shall ensure that all ithorized entrants:

(1) Know the hazards that may be ced during entry, including formation on the mode, signs or mptoms, and consequences of the posure;

(2) Properly use equipment as quired by paragraph (d)(4) of this ction;

(3) Communicate with the attendant necessary to enable the attendant to onitor entrant status and to enable the tendant to alert entrants of the need to acuate the space as required by aragraph (i)(6) of this section;

(4) Alert the attendant whenever:

(i) The entrant recognizes any arning sign or symptom of exposure to dangerous situation, or

(ii) The entrant detects a prohibited ndition; and

(5) Exit from the permit space as ickly as possible whenever:

(i) An order to evacuate is given by e attendant or the entry supervisor,

(ii) The entrant recognizes any arning sign or symptom of exposure to dangerous situation,

(iii) The entrant detects a prohibited ndition, or

(iv) An evacuation alarm is activated.

(i) *Duties of attendants.* The employer all ensure that each attendant:

(1) Knows the hazards that may be ced during entry, including formation on the mode, signs or mptoms, and consequences of the posure;

(2) Is aware of possible behavioral ects of hazard exposure in authorized trants;

(3) Continuously maintains an curate count of authorized entrants in e permit space and ensures that the eans used to identify authorized trants under paragraph (f)(4) of this ction accurately identifies who is in e permit space;

(4) Remains outside the permit space ring entry operations until relieved another attendant;

Note: When the employer's permit entry ogram allows attendant entry for rescue, endants may enter a permit space to empt a rescue if they have been trained d equipped for rescue operations as uired by paragraph (k)(1) of this section d if they have been relieved as required by aragraph (l)(4) of this section.

(5) Communicates with authorized entrants as necessary to monitor entrant status and to alert entrants of the need to evacuate the space under paragraph (i)(6) of this section;

(6) Monitors activities inside and outside the space to determine if it is safe for entrants to remain in the space and orders the authorized entrants to evacuate the permit space immediately under any of the following conditions:

(i) If the attendant detects a prohibited condition;

(ii) If the attendant detects the behavioral effects of hazard exposure in an authorized entrant;

(iii) If the attendant detects a situation outside the space that could endanger the authorized entrants; or

(iv) If the attendant cannot effectively and safely perform all the duties required under paragraph (i) of this section;

(7) Summon rescue and other emergency services as soon as the attendant determines that authorized entrants may need assistance to escape from permit space hazards;

(8) Takes the following actions when unauthorized persons approach or enter a permit space while entry is underway:

(i) Warn the unauthorized persons that they must stay away from the permit space;

(ii) Advise the unauthorized persons that they must exit immediately if they have entered the permit space; and

(iii) Inform the authorized entrants and the entry supervisor if unauthorized persons have entered the permit space;

(9) Performs non-entry rescues as specified by the employer's rescue procedure; and

(10) Performs no duties that might interfere with the attendant's primary duty to monitor and protect the authorized entrants.

(j) *Duties of entry supervisors.* The employer shall ensure that each entry supervisor:

(1) Knows the hazards that may be faced during entry, including information on the mode, signs or symptoms, and consequences of the exposure;

(2) Verifies, by checking that the appropriate entries have been made on the permit, that all tests specified by the permit have been conducted and that all procedures and equipment specified by the permit are in place before endorsing the permit and allowing entry to begin;

(3) Terminates the entry and cancels the permit as required by paragraph (e)(5) of this section;

(4) Verifies that rescue services are available and that the means for summoning them are operable;

(5) Removes unauthorized individuals who enter or who attempt to enter the permit space during entry operations; and

(6) Determines, whenever responsibility for a permit space entry operation is transferred and at intervals dictated by the hazards and operations performed within the space, that entry operations remain consistent with terms of the entry permit and that acceptable entry conditions are maintained.

(k) *Rescue and emergency services.* (1) The following requirements apply to employers who have employees enter permit spaces to perform rescue services.

(i) The employer shall ensure that each member of the rescue service is provided with, and is trained to use properly, the personal protective equipment and rescue equipment necessary for making rescues from permit spaces.

(ii) Each member of the rescue service shall be trained to perform the assigned rescue duties. Each member of the rescue service shall also receive the training required of authorized entrants under paragraph (g) of this section.

(iii) Each member of the rescue service shall practice making permit space rescues at least once every 12 months, by means of simulated rescue operations in which they remove dummies, manikins, or actual persons from the actual permit spaces or from representative permit spaces. Representative permit spaces shall, with respect to opening size, configuration, and accessibility, simulate the types of permit spaces from which rescue is to be performed.

(iv) Each member of the rescue service shall be trained in basic first-aid and in cardiopulmonary resuscitation (CPR). At least one member of the rescue service holding current certification in first aid and in CPR shall be available.

(2) When an employer (host employer) arranges to have persons other than the host employer's employees perform permit space rescue, the host employer shall:

(i) Inform the rescue service of the hazards they may confront when called on to perform rescue at the host employer's facility, and

(ii) Provide the rescue service with access to all permit spaces from which rescue may be necessary so that the rescue service can develop appropriate rescue plans and practice rescue operations.

(3) To facilitate non-entry rescue, retrieval systems or methods shall be used whenever an authorized entrant enters a permit space, unless the retrieval equipment would increase the overall risk of entry or would not contribute to the rescue of the entrant.

Retrieval systems shall meet the following requirements.

(i) Each authorized entrant shall use a chest or full body harness, with a retrieval line attached at the center of the entrant's back near shoulder level, or above the entrant's head. Wristlets may be used in lieu of the chest or full body harness if the employer can demonstrate that the use of a chest or full body harness is infeasible or creates a greater hazard and that the use of wristlets is the safest and most effective alternative.

(ii) The other end of the retrieval line shall be attached to a mechanical device or fixed point outside the permit space in such a manner that rescue can begin as soon as the rescuer becomes aware that rescue is necessary. A mechanical device shall be available to retrieve personnel from vertical type permit spaces more than 5 feet deep.

(4) If an injured entrant is exposed to a substance for which a Material Safety Data Sheet (MSDS) or other similar written information is required to be kept at the worksite, that MSDS or written information shall be made available to the medical facility treating the exposed entrant.

APPENDICES TO §1910.146—PERMIT-REQUIRED CONFINED SPACES

Note: Appendices A through E serve to provide information and non-mandatory guidelines to assist employers and employees in complying with the appropriate requirements of this section.

Appendix A to §1910.146—Permit-required Confined Space Decision Flow Chart

Appendix A

Permit-required Confined Space Decision Flow Chart

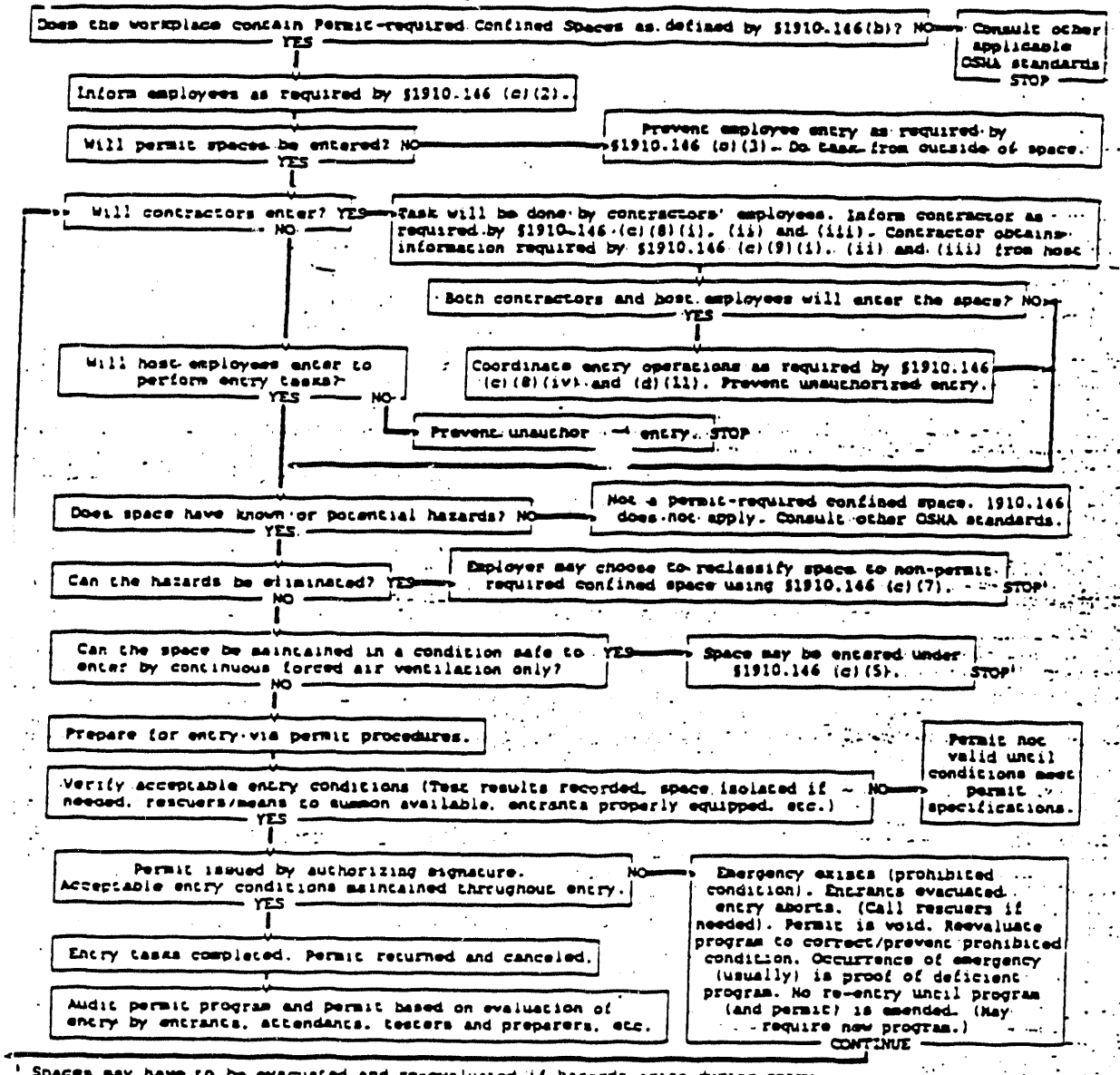

[1] Spaces may have to be evacuated and re-evaluated if hazards arise during entry

Appendix B to §1910.146—Procedures for Atmospheric Testing

[illegible]mospheric testing is required for two [illegible]ct purposes: evaluation of the hazards of the permit space and verification that acceptable entry conditions for entry into that space exist.

(1) *Evaluation testing.* The atmosphere of a confined space should be analyzed using equipment of sufficient sensitivity and specificity to identify and evaluate any hazardous atmospheres that may exist or arise, so that appropriate permit entry procedures can be developed and acceptable entry conditions stipulated for that space. Evaluation and interpretation of these data, and development of the entry procedure, should be done by, or reviewed by, a technically qualified professional (e.g., OSHA consultation service, or certified industrial hygienist, registered safety engineer, certified safety professional, etc.) based on evaluation of all serious hazards.

(2) *Verification testing.* The atmosphere of a permit space which may contain a hazardous atmosphere should be tested for residues of all contaminants identified by evaluation testing using permit specified equipment to determine that residual concentrations at the time of testing and entry are within the range of acceptable entry conditions. Results of testing (i.e., actual concentration, etc.) should be recorded on the permit in the space provided adjacent to the stipulated acceptable entry condition.

(3) *Duration of testing.* Measurement of values for each atmospheric parameter should be made for at least the minimum response time of the test instrument specified [illegible] manufacturer.

[illegible]*sting stratified atmospheres.* When monitoring for entries involving a descent into atmospheres that may be stratified, the atmospheric envelope should be tested a distance of approximately 4 feet (1.22 m) in the direction of travel and to each side. If a sampling probe is used, the entrant's rate of progress should be slowed to accommodate the sampling speed and detector response.

Appendix C to §1910.146—Examples of Permit-required Confined Space Programs

Example 1.

Workplace. Sewer entry.

Potential hazards. The employees could be exposed to the following:

Engulfment.

Presence of toxic gases. Equal to or more than [illegible] ppm hydrogen sulfide. If the presence of other toxic contaminants is suspected, specific monitoring programs will be developed.

Presence of explosive/flammable gases. Equal or greater than 10% of the lower flammable limit (LFL).

Oxygen Deficiency. A concentration of oxygen in the atmosphere equal to or less than 19.5% by volume.

Entry Without Permit/Attendant

Justification. Confined spaces may be entered without the need for a written permit or attendant provided that: 1.) the space is [illegible] not to be a permit required [illegible]ace, or 2.) the space can be maintained in a safe condition for entry by mechanical ventilation alone. All spaces shall be considered permit-required confined spaces until the pre-entry procedures demonstrate otherwise. Any employee required or permitted to pre-check or enter an enclosed/confined space shall have successfully completed, as a minimum, the training as required by the following sections of these procedures. *A written copy of operating and rescue procedures as required by these procedures shall be at the work site for the duration of the job.* The Confined Space Pre-Entry Check List must be completed by the LEAD WORKER before entry into a confined space. This list verifies completion of items listed below. This check list shall be kept at the job site for duration of the job. If circumstances dictate an interruption in the work, the permit space must be re-evaluated and a new check list must be completed.

Control of atmospheric and engulfment hazards.

Pumps and Lines. All pumps and lines which may reasonably cause contaminants to flow into the space shall be disconnected, blinded and locked out, or effectively isolated by other means to prevent development of dangerous air contamination or engulfment. Not all laterals to sewers or storm drains require blocking. However, where experience or knowledge of industrial use indicates there is a reasonable potential for contamination of air or engulfment into an occupied sewer, then all affected laterals shall be blocked. If blocking and/or isolation requires entry into the space the provisions for entry into a permit- required confined space must be implemented.

Surveillance. The surrounding area shall be surveyed to avoid hazards such as drifting vapors from the tanks, piping, or sewers.

Testing. The atmosphere within the space will be tested to determine whether dangerous air contamination and/or oxygen deficiency exists. An alarm only type gas monitor may be used. Testing shall be performed by the LEAD WORKER who has successfully completed the Gas Detector training for the monitor he will use. The minimum parameters to be monitored are oxygen deficiency, LFL and hydrogen sulfide concentration. A written record of the pre-entry test results shall be made and kept at the work site for the duration of the job. The supervisor will certify in writing, based upon the results of the pre-entry testing, that all hazards have been eliminated. Affected employees shall be able to review the testing results. The most hazardous conditions shall govern when work is being performed in two adjoining, connecting spaces.

Entry Procedures. If there are no non-atmospheric hazards present and if the pre-entry tests show there is no dangerous air contamination and/or oxygen deficiency within the space and there is no reason to believe that any is likely to develop, entry into and work within may proceed. Continuous testing of the atmosphere in the immediate vicinity of the workers within the space shall be accomplished. The workers will immediately leave the permit space when any of the gas monitor alarm set points are reached as defined. Workers will not return to the area until a SUPERVISOR who has completed the gas detector training has used a direct reading gas detector to evaluate the situation and has determined that it is safe to enter.

Rescue. Arrangements for rescue services are not required where there is no attendant. See the rescue portion of section B., below, for instructions regarding rescue planning where an entry permit is required.

B. Entry Permit Required

Permits. Confined Space Entry Permit. All spaces shall be considered permit-required confined spaces until the pre-entry procedures demonstrate otherwise. Any employee required or permitted to pre-check or enter a permit-required confined space shall have successfully completed, as a minimum, the training as required by the following sections of these procedures. *A written copy of operating and rescue procedures as required by these procedures shall be at the work site for the duration of the job.* The Confined Space Entry Permit must be completed before approval can be given to enter a permit-required confined space. This permit verifies completion of items listed below. This permit shall be kept at the job site for the duration of the job. If circumstances cause an interruption in the work or a change in the alarm conditions for which entry was approved, a new Confined Space Entry Permit must be completed.

Control of atmospheric and engulfment hazards.

Surveillance. The surrounding area shall be surveyed to avoid hazards such as drifting vapors from tanks, piping or sewers.

Testing. The confined space atmosphere shall be tested to determine whether dangerous air contamination and/or oxygen deficiency exists. A direct reading gas monitor shall be used. Testing shall be performed by the SUPERVISOR who has successfully completed the gas detector training for the monitor he will use. The minimum parameters to be monitored are oxygen deficiency, LFL and hydrogen sulfide concentration. A written record of the pre-entry test results shall be made and kept at the work site for the duration of the job. Affected employees shall be able to review the testing results. The most hazardous conditions shall govern when work is being performed in two adjoining, connected spaces.

Space Ventilation. Mechanical ventilation systems, where applicable, shall be set at 100% outside air. Where possible, open additional manholes to increase air circulation. Use portable blowers to augment natural circulation if needed. After a suitable ventilating period, repeat the testing. Entry may not begin until testing has demonstrated that the hazardous atmosphere has been eliminated.

Entry Procedures. The following procedure shall be observed under any of the following conditions: 1.) Testing demonstrates the existence of dangerous or deficient conditions and additional ventilation cannot reduce concentrations to safe levels; 2.) The atmosphere tests as safe but unsafe

nditions can reasonably be expected to
relop: 3.) It is not feasible to provide for
dy exit from spaces equipped with
omatic fire suppression systems and it is
practical or safe to deactivate such
tems; or 4.) An emergency exists and it is
feasible to wait for pre-entry procedures
take effect.

ll personnel must be trained. A self
contained breathing apparatus shall be worn
by person entering the space. At least
worker shall stand by the outside of the
e ready to give assistance in case of
rgency. The standby worker shall have a
contained breathing apparatus available
mmediate use. There shall be at least one
tional worker within sight or call of the
by worker. Continuous powered
unications shall be maintained
een the worker within the confined
and standby personnel.

any time there is any questionable
or non- movement by the worker
a verbal check will be made. If there
esponse, the worker will be moved
lately. *Exception:* If the worker is
d due to falling or impact, he/she
ot be removed from the confined space
there is immediate danger to his/her
al fire department rescue personnel
notified immediately. The standby
may only enter the confined space in
n emergency (wearing the self
ed breathing apparatus) and only after
lieved by another worker. Safety belt
ss with attached lifeline shall be
ll workers entering the space with
nd of the line secured outside the
ning. The standby worker shall
o remove a disabled worker via his
efore entering the space.

ractical, these spaces shall be
rough side openings—those within
(1.07 m) of the bottom. When entry
rough a top opening, the safety belt
the harness type that suspends a
right and a hoisting device or
paratus shall be available for lifting
it of the space.

tuation where their use may
he worker, use of a hoisting device
it and attached lifeline may be
ed.

gerous air contamination is
to flammable and/or explosive
lighting and electrical equipment
s 1, Division 1 rated per National
ode and no ignition sources shall
d into the area.

s gas monitoring shall be
uring all confined space
f alarm conditions change
try personnel shall exit the
ce and a new confined space

he fire department services for
immediate hazards to injured
present, workers at the site
ut emergency procedures to fit

eat and poultry rendering

dryers are either batch or
heir operation. Multiple batch
cookers are operated in parallel. When one unit of a multiple set is shut down for repairs, means are available to isolate that unit from the others which remain in operation.

Cookers and dryers are horizontal, cylindrical vessels equipped with a center, rotating shaft and agitator paddles or discs. If the inner shell is jacketed, it is usually heated with steam at pressures up to 150 psig (1034.25 kPa). The rotating shaft assembly of the continuous cooker or dryer is also steam heated.

Potential Hazards. The recognized hazards associated with cookers and dryers are the risk that employees could be:

1. Struck or caught by rotating agitator;
2. Engulfed in raw material or hot, recycled fat;
3. Burned by steam from leaks into the cooker/dryer steam jacket or the condenser duct system if steam valves are not properly closed and locked out;
4. Burned by contact with hot metal surfaces, such as the agitator shaft assembly, or inner shell of the cooker/dryer;
5. Heat stress caused by warm atmosphere inside cooker/dryer;
6. Slipping and falling on grease in the cooker/dryer;
7. Electrically shocked by faulty equipment taken into the cooker/dryer;
8. Burned or overcome by fire or products of combustion; or
9. Overcome by fumes generated by welding or cutting done on grease covered surfaces.

Permits. The supervisor in this case is always present at the cooker/dryer or other permit entry confined space when entry is made. The supervisor must follow the pre-entry isolation procedures described in the entry permit in preparing for entry, and ensure that the protective clothing, ventilating equipment and any other equipment required by the permit are at the entry site.

Control of hazards. Mechanical. Lock out main power switch to agitator motor at main power panel. Affix tag to the lock to inform others that a permit entry confined space entry is in progress.

Engulfment. Close all valves in the raw material blow line. Secure each valve in its closed position using chain and lock. Attach a tag to the valve and chain warning that a permit entry confined space entry is in progress. The same procedure shall be used for securing the fat recycle valve.

Burns and heat stress. Close steam supply valves to jacket and secure with chains and tags. Insert solid blank at flange in cooker vent line to condenser manifold duct system. Vent cooker/dryer by opening access door at discharge end and top center door to allow natural ventilation throughout the entry. If faster cooling is needed, use an portable ventilation fan to increase ventilation. Cooling water may be circulated through the jacket to reduce both outer and inner surface temperatures of cooker/dryers faster. Check air and inner surface temperatures in cooker/dryer to assure they are within acceptable limits before entering, or use proper protective clothing.

Fire and fume hazards. Careful site preparation, such as cleaning the area within 4 inches (10.16 cm) of all welding or torch cutting operations, and proper ventilation are the preferred controls. All welding and cutting operations shall be done in accordance with the requirements of 29 CFR Part 1910, Subpart Q, OSHA's welding standard. Proper ventilation may be achieved by local exhaust ventilation, or the use of portable ventilation fans, or a combination of the two practices.

Electrical shock. Electrical equipment used in cooker/dryers shall be in serviceable condition.

Slips and falls. Remove residual grease before entering cooker/dryer.

Attendant. The supervisor shall be the attendant for employees entering cooker/dryers.

Permit. The permit shall specify how isolation shall be done and any other preparations needed before making entry. This is especially important in parallel arrangements of cooker/dryers so that the entire operation need not be shut down to allow safe entry into one unit.

Rescue. When necessary, the attendant shall call the fire department as previously arranged.

Example 3.

Workplace. Workplaces where tank cars, trucks, and trailers, dry bulk tanks and trailers, railroad tank cars, and similar portable tanks are fabricated or serviced.

A. *During fabrication.* These tanks and dry-bulk carriers are entered repeatedly throughout the fabrication process. These products are not configured identically, but the manufacturing processes by which they are made are very similar.

Sources of hazards. In addition to the mechanical hazards arising from the risks that an entrant would be injured due to contact with components of the tank or the tools being used, there is also the risk that a worker could be injured by breathing fumes from welding materials or mists or vapors from materials used to coat the tank interior. In addition, many of these vapors and mists are flammable, so the failure to properly ventilate a tank could lead to a fire or explosion.

Control of hazards.

Welding. Local exhaust ventilation shall be used to remove welding fumes once the tank or carrier is completed to the point that workers may enter and exit only through a manhole. (Follow the requirements of 29 CFR 1910, Subpart Q, OSHA's welding standards at all times.) Welding gas tanks may never be brought into a tank or carrier that is a permit entry confined space.

Application of interior coatings/linings. Atmospheric hazards shall be controlled by forced air ventilation sufficient to keep the atmospheric concentration of flammable materials below 10% of the lower flammable limit (LFL) (or lower explosive limit (LEL), whichever term is used locally). The appropriate respirators are provided and shall be used in addition to providing forced ventilation if the forced ventilation does not maintain acceptable respiratory conditions.

Permits. Because of the repetitive nature of the entries in these operations, an "Area

Entry Permit" will be issued for a 1 month period to cover those production areas where tanks are fabricated to the point that entry and exit are made using manholes.

Authorization. Only the area supervisor may authorize an employee to enter a tank within the permit area. The area supervisor must determine that conditions in the tank trailer, dry bulk trailer or truck, etc. meet permit requirements before authorizing entry.

Attendant. The area supervisor shall designate an employee to maintain communication by employer specified means with employees working in tanks to ensure their safety. The attendant may not enter any permit entry confined space to rescue an entrant or for any other reason, unless authorized by the rescue procedure and, and even then, only after calling the rescue team and being relieved by as attendant by another worker.

Communications and observation. Communications between attendant and entrant(s) shall be maintained throughout entry. Methods of communication that may be specified by the permit include voice, voice powered radio, tapping or rapping codes on tank walls, signalling tugs on a rope, and the attendant's observation that work activities such as chipping, grinding, welding, spraying, etc., which require deliberate operator control continue normally. These activities often generate so much noise that the necessary hearing protection makes communication by voice difficult.

Rescue procedures. Acceptable rescue procedures include entry by a team of employee-rescuers, use of public emergency services, and procedures for breaching the tank. The area permit specifies which procedures are available, but the area supervisor makes the final decision based on circumstances. (Certain injuries may make it necessary to breach the tank to remove a person rather than risk additional injury by removal through an existing manhole. However, the supervisor must ensure that no breaching procedure used for rescue would violate terms of the entry permit. For instance, if the tank must be breached by cutting with a torch, the tank surfaces to be cut must be free of volatile or combustible coatings within 4 inches (10.16 cm) of the cutting line and the atmosphere within the tank must be below the LFL.

Retrieval line and harnesses. The retrieval lines and harnesses generally required under this standard are usually impractical for use in tanks because the internal configuration of the tanks and their interior baffles and other structures would prevent rescuers from hauling out injured entrants. However, unless the rescue procedure calls for breaching the tank for rescue, the rescue team shall be trained in the use of retrieval lines and harnesses for removing injured employees through manholes.

B. *Repair or service of "used" tanks and bulk trailers.*

Sources of hazards. In addition to facing the potential hazards encountered in fabrication or manufacturing, tanks or trailers which have been in service may contain residues of dangerous materials, whether left over from the transportation of hazardous cargoes or generated by chemical or bacterial action on residues of non-hazardous cargoes.

Control of atmospheric hazards. A "used" tank shall be brought into areas where tank entry is authorized only after the tank has been emptied, cleansed (without employee entry) of any residues, and purged of any potential atmospheric hazards.

Welding. In addition to tank cleaning for control of atmospheric hazards, coating and surface materials shall be removed 4 inches (10.16 cm) or more from any surface area where welding or other torch work will be done and care taken that the atmosphere within the tank remains well below the LFL. (Follow the requirements of 29 CFR 1910, Subpart Q, OSHA's welding standard, at all times.)

Permits. An entry permit valid for up to 1 year shall be issued prior to authorization of entry into used tank trailers, dry bulk trailers or trucks. In addition to the pre-entry cleaning requirement, this permit shall require the employee safeguards specified for new tank fabrication or construction permit areas.

Authorization. Only the area supervisor may authorize an employee to enter a tank trailer, dry bulk trailer or truck within the permit area. The area supervisor must determine that the entry permit requirements have been met before authorizing entry.

Appendix D to §1910.146—Sample Permits

Appendix D - 1A Sewer Entry Permit

Confined Space Pre-Entry Check List

See Safety Procedure.
A confined space either is entered through an opening other than a door (such as manhole or side port) or requires the use of a ladder or rungs to reach the working level and test results are satisfactory. This check list must be filled out whenever the job site meets this criteria.

	Yes	No
1. Did your survey of the surrounding area show it to be free of hazards such as drifting vapors from tanks, piping or sewers?	( )	( )
2. Does your knowledge of industrial or other discharges indicate this area is likely to remain free of dangerous air contaminants while occupied?	( )	( )
3. Are you certified in operation of the gas monitor to be used?	( )	( )
4. Has a gas monitor functional test (Bump Test) been performed this shift on the gas monitor to be used?	( )	( )
5. Did you test the atmosphere of the confined space prior to entry?	( )	( )
6. Did the atmosphere check as acceptable (no alarms given)?	( )	( )
7. Will the atmosphere be continuously monitored while the space is occupied?	( )	( )

Contact County Centrex for personnel rescue by local fire department in the event of an emergency. If on-site at the Regional Treatment Plant, contact the Plant Control Center (PCC).

Notice: If any of the above questions are answered "no" do not enter. Contact your immediate supervisor.

Job Location_____
HEAD MAN Signature_____ Date_____

Appendix D - 1B

Confined Space Entry Permit (Pre-Entry/Entry Check List)

Date and Time Issued: _____

Date and Time Expires: _____

Job site: _____

Job Supervisor _____

Equipment to be worked on: _____

Work to be performed: _____

Pre-Entry (See Safety Procedure)

1. Atmospheric Checks:

Time	_____	
Oxygen	_____	%
Explosive	_____	% L.F.L.
Toxic	_____	PPM

2. Source isolation (No Entry):

	N/A	Yes	No
Pumps or lines blinded, disconnected, or blocked	( )	( )	( )
	( )	( )	( )

3. Ventilation Modification:

	N/A	Yes	No
Mechanical	( )	( )	( )
Natural Ventilation only	( )	( )	( )

4. Atmospheric check after isolation and Ventilation:

Oxygen _____	%	>	19.5 %
Explosive _____	% L.F.L.	<	10 %
Toxic _____	PPM	<	10 PPM H_2S
Time _____			

Entry (See Safety Procedure)

1. Entry, standby, and back up persons:

	Yes	No
Successfully completed required training?	( )	( )
Is it current?	( )	( )

2. Equipment:

	N/A	Yes	No
Direct reading gas monitor - tested	( )	( )	( )
Safety harnesses and lifelines for entry and standby persons	( )	( )	( )
Hoisting equipment	( )	( )	( )
Powered communications	( )	( )	( )
SCBA's for entry and standby persons	( )	( )	( )
Protective Clothing	( )	( )	( )
All electric equipment listed Class I, Division I, Group D and Non-sparking tools	( )	( )	( )

3. Rescue Procedure:

_____

_____

_____

_____

_____

_____

If conditions are in compliance with the above requirements and there is no reason to believe conditions may change adversely, then proceed to the Permit Space Pre-Entry Check List. Complete and post with this permit. If conditions are not in compliance with the above requirements or there is reason to believe that conditions may change adversely, proceed to the Entry Check-List portion of this permit.

We have reviewed the work authorized by this permit and the information contained here-in. Written instructions and safety procedures have been received and are understood. Entry cannot be approved if any squares are marked in the "No" column. This permit is not valid unless all appropriate items are completed.

Permit and Check List Prepared By: (Supervisor) _____

Approved By: (Unit Supervisor) _____

Reviewed By (Confined Space Operations Personnel): (printed name & signature)

_____ _____

This permit to be kept at job site. Return job site copy to Safety Office following job completion.

Copies: White Original (Safety Office) Yellow (Unit Supervisor) Hard(Job site)

Appendix D - 2

ENTRY PERMIT

_____CONFINED SPACE _____HAZARDOUS AREA

PERMIT VALID FOR 8 HOURS ONLY. ALL COPIES OF PERMIT WILL REMAIN AT JOB SITE UNTIL JOB IS COMPLETED

SITE LOCATION and DESCRIPTION _____

PURPOSE OF ENTRY _____

SUPERVISOR(S) in charge of crews Type of Crew Phone #

_____

* BOLD DENOTES MINIMUM REQUIREMENTS TO BE COMPLETED AND REVIEWED PRIOR TO ENTRY*

REQUIREMENTS COMPLETED	DATE	TIME	REQUIREMENTS COMPLETED	DATE	TIME
Lock Out/De-energize/Try-out	____	____	Full Body Harness w/"D" ring	____	____
Line(s) Broken-Capped-Blanked	____	____	Emergency Escape Retrieval Equip	____	____
Purge-Flush and Vent	____	____	Lifelines	____	____
Ventilation	____	____	Fire Extinguishers	____	____
Secure Area (Post and Flag)	____	____	Lighting (Explosive Proof)	____	____
Breathing Apparatus	____	____	Protective Clothing	____	____
Resuscitator - Inhalator	____	____	Respirator(s) (Air Purifying)	____	____
Standby Safety Personnel	____	____	Burning and Welding Permit	____	____

Note: Items that do not apply enter N/A in the blank.

** RECORD CONTINUOUS MONITORING RESULTS EVERY 2 HOURS

CONTINUOUS MONITORING** TEST(S) TO BE TAKEN	Permissible Entry Level	_____	_____	_____	_____	_____	_____	_____	_____
PERCENT OF OXYGEN	19.5% to 23.5%	____	____	____	____	____	____	____	____
LOWER FLAMMABLE LIMIT	Under 10%	____	____	____	____	____	____	____	____
CARBON MONOXIDE	+35 PPM	____	____	____	____	____	____	____	____
Aromatic Hydrocarbon	+ 1 PPM * 5PPM	____	____	____	____	____	____	____	____
Hydrogen Cyanide	(Skin) * 4PPM	____	____	____	____	____	____	____	____
Hydrogen Sulfide	+10 PPM *15PPM	____	____	____	____	____	____	____	____
Sulfur Dioxide	+ 2 PPM * 5PPM	____	____	____	____	____	____	____	____
Ammonia	*35PPM	____	____	____	____	____	____	____	____

* Short-term exposure limit:Employee can work in the area up to 15 minutes.

+ 8 hr. Time Weighted Avg.;Employee can work in area 8 hrs (longer with appropriate respiratory protection).

REMARKS:_____

GAS TESTER NAME & CHECK # INSTRUMENT(S) USED MODEL &/OR TYPE SERIAL &/OR UNIT #

_____ _____ _____ _____

_____ _____ _____ _____

SAFETY STANDBY PERSON IS REQUIRED FOR ALL CONFINED SPACE WORK

SAFETY STANDBY PERSON(S) CHECK # NAME OF SAFETY STANDBY PERSON(S) CHECK #

_____ _____ _____ _____

_____ _____ _____ _____

SUPERVISOR AUTHORIZING ENTRY

ALL ABOVE CONDITIONS SATISFIED_____

DEPARTMENT_____Phone_____

AMBULANCE 2800
Safety 4901
Original to Department

FIRE 2900
Gas Coordinator 4529/5387
Pink Copy to Safety

Appendix E to §1910.146—Sewer System Entry

Sewer entry differs in three vital respects from other permit entries: first, there rarely is any way to completely isolate the space (a section of a continuous system) to be entered; second, because isolation is not complete, the atmosphere may suddenly and unpredictably become lethally hazardous (toxic, flammable or explosive) from causes beyond the control of the entrant or employer, and third, experienced sewer workers are especially knowledgeable in entry and work in their permit spaces because of their frequent entries. Unlike other employments where permit space entry is a rare and exceptional event, sewer workers' usual work environment is a permit space.

(1) *Adherence to procedure.* The employer should designate as entrants only employees who are thoroughly trained in the employer's sewer entry procedures and who demonstrate that they follow these entry procedures exactly as prescribed when performing sewer entries.

(2) *Atmospheric monitoring.* Entrants should be trained in the use of, and be equipped with, atmospheric monitoring equipment which sounds an audible alarm, in addition to its visual readout, whenever one of the following conditions is encountered: oxygen concentration less than 19.5 percent; flammable gas or vapor at 10 percent or more of the lower flammable limit (LFL); or hydrogen sulfide or carbon monoxide at or above their PEL (10 ppm or 50 ppm, respectively); or, if a broad range sensor device is used, at 100 ppm as characterized by its response to toluene. Normally, the oxygen sensor/broad range sensor instrument is best suited for sewer entry. However, substance specific devices should be used whenever actual contaminants have been identified. The instrument should be carried and used by the entrant in sewer line work to monitor the atmosphere in the entrant's environment, and in advance of the entrants' direction of movement, to warn the entrant of any deterioration in atmospheric conditions. Where several entrants are working together in the same immediate location, one instrument, used by the lead entrant, is acceptable.

(3) *Surge flow and flooding.* Sewer crews should develop and maintain liaison, to the extent possible, with the local weather bureau and fire and emergency services in their area so that sewer work may be delayed or interrupted and entrants withdrawn whenever sewer lines might be suddenly flooded by rain or fire suppression activities, or whenever flammable or other hazardous materials are released into sewers during emergencies by industrial or transportation accidents.

(4) *Special Equipment.* Entry into large bore sewers may require the use of special equipment. Such equipment might include such items as atmosphere monitoring devices with automatic audible alarms, escape self-contained breathing apparatus (ESCBA) with at least 10 minute air supply (or other NIOSH approved self-rescuer), and waterproof flashlights, and may also include boats and rafts, radios and rope stand-offs for pulling around bends and corners as needed.

[FR Doc. 93-538 Filed 1-13-1993; 8:45 am]

BILLING CODE 4510-26-

CONFINED SPACE SUMMARY

ANSI Z117.1-1989

SCOPE

Applies to entry, exiting, and working in confined spaces at normal atmospheric pressure with the exception of: underground mining, caisson work, tunneling, and other similar tasks that have established national consensus standards.

DEFINITION

A confined space is an enclosed area that:

- its primary function is something other than human occupancy, and
- has restricted entry and exit, and
- may contain potential or known hazards

MAJOR PROVISIONS

3.1 A survey shall be conducted of the premise or operation, or both to identify confined spaces as defined in this standard.

3.2 Hazards shall be identified for each confined space. A review shall include, but not limited to:

- Physical characteristics, configuration, and location of the confined space
- Existing and potential hazards, such as
  1) Oxygen deficiency
  2) Flammable/explosive atmospheres
  3) Toxic atmospheres
- Biological hazards
- Mechanical hazards (auger, rotating gears, etc...)

3.4 Based on the evaluation of the hazards, a qualified person shall classify the confined space as a permit-required confined space (PRCS) or non-permit confined space (NPCS).

PRCS -*A confined space which after evaluation has actual or potential hazards which have been determined to require written authorization for entry.*

NPCS -*A space which, by configuration, meets the definition of a confined space but which after evaluation is found to have little potential for generation of hazards or has the hazards abated by engineering controls.*

5.1 Entry permit for PRCS shall include:

- Date of entry
- Location of entry
- Type work to be performed in the confined space
- Hazards to be controlled or eliminated prior to entry
- Safety equipment required
- Safety precautions required to the job
- Type of atmospheric tests and the results of those tests
- Type of rescue equipment that will be needed
- Duration for the permit
- Space for approval authority

6.0 Atmospheres must be tested in confined space before entry. Recommended sequence is oxygen, flammability, toxic.

6.1.2 Further tests shall be conducted with the ventilation system on. (To ensure ventilation does not introduce engine exhaust and other toxic gases)

6.1.3 If the confine space is vacated for any significant time period, retesting of atmosphere shall be conducted.

6.3 Acceptable limits:

- Oxygen - 19.5% To 23.5%
- Flammability - less than 10% of the LEL
- Toxic - less than recognized exposure limits (OSHA, ACGIH, MSDS, etc...)

7.2 Attendants shall be stationed outside any PRCS

7.3 Attendants and occupants shall remain in constant two way communication

8.1 All energy source which are potentially hazardous shall be locked out, disconnected, relieved, and/or restrained before any entry into confined spaces.

8.2 Methods and means shall be selected and used to prevent flammable, toxic, irritating, or oxygen displacing gases and vapors from entering the space. All hazardous material, high pressure, high temperature and other piping that could introduce a hazard shall be isolated by blinding, disconnection, removal, or double block and bleed as needed to prevent of material(s) and hazardous contaminants.

8.2.1 Pipelines and other similar conveyances between the confined space and point(s) of isolation shall be drained, cleaned, or flushed of hazardous materials and known contaminants as necessary.

9.1 When ventilation is used to remove atmospheric contaminant from confined spaces, the space shall be ventilated until the atmosphere is within acceptable ranges.

9.1.1 Ventilation shall be made during the occupancy if there is the potential for the atmospheric conditions of the confined space moving out of the acceptable range.

9.1.2 When ventilation is not possible or feasible, alternate protective measure or methods to remove air contaminants and protect the occupants shall be determined by the qualified person prior to authorizing entry.

10.1 Confined spaces shall be cleaned/decontaminated of hazardous materials to the extent feasible before entry.

12.2 Appropriate retrieval equipment shall be used when a person enters a PRCS.

12.2.1 A mechanical device shall be available to retrieve personnel from vertical type PRCS's greater than five feet in depth.

13.1 Confined spaces which could inadvertently be enter shall have a sign identifying it as a confined space.

13.1.2 Sign for PRCS shall have a warning that a permit is required before entry.

14.1 A plan of action (Emergency Response Plan) shall be written with provisions to conduct a timely rescue for individuals in a confined space should an emergency arise.

It shall include:

- Method of rescue
- Designation of rescue personnel
- Type and availability of rescue equipment
- Method to summon rescuers
- Training and drill of attendant and rescue personnel in preplanning, rescue, and emergency procedures

15.1 Personnel responsible for supervising, planning, entering,or participating in confined space entry and rescue shall adequately be trained in their function prior to any confine entry.

Training shall include:

- Hazards associated with confined spaces
- Reason for, proper use, limitations of PPE
- Explanation of the permit system
- How to respond to emergencies
- Duties/responsibilities as a member of a confined space entry team
- A description of how to recognize probable air contaminant overexposure symptoms to themselves and co-worker, and method(s) for alerting attendants.

15.2 Personnel using atmospheric monitoring equipment shall be trained in its use, calibration, the anticipated hazardous contaminant, and any factors which could significantly alter the conditions inside or outside of the confined space.

15.4.3 Rescue personnel shall be trained in first aid and CPR

HAZARDS FOR A CONFINED SPACE

JN/OTI March 31, 1992

Confined spaces are often hard to define. The following factors should be considered when evaluating a trench, manhole, or excavation for the hazard of confined spaces.

1a) Soil has high organic content (Use USDA soil survey criteria of more than 4% organic content by volume)

1b) Soil has methane pockets (Hydrogen Sulfide in certain locales)

2a) Area is in a high traffic area. Carbon Dioxide is heavier than air and could settle in the low areas. Carbon Monoxide although not heavier than air is toxic byproduct of combustion engines.

2b) Use of diesel/gasoline equipment in the space. Same rationale as 2a.

3) Use of chemicals in the space. Solvents from waterproofing compounds/pipe sealers have been past causes of fatalities.

4a) Adjacent to gas main or a landfill. Gases from both are hazardous.

4b) Connecting to or next to a live sewer main. Gases can travel down or upstream of the confine space.

5) Space has left been alone for a long period of time. Anything from underground gases, chemical offgassing, oxygen depletion through oxidation, and many others can occur in the confine space.

TYPES OF CONSTRUCTION CONFINED SPACE FATALITIES

JN/OTI March 31, 1992

1) Excavations - Approximately 16 feet wide, 20 feet deep. Carbon Dioxide displaced the oxygen in the excavation. The CO_2 was from the decomposition of the highly organic soil. Rescuer also died.

2) Manhole - 12-13 feet deep, not connected to live line, 4% O_2, 20% LEL. (probable methane)

3) Foundation - 13 feet deep, 3 feet wide, applying waterproofing. Vapors offgassed the solvents, methyl choroform and 1,4 dioxane.

4) Underground Vault - CO_2 in vault, employees were looking for problem in a telephone line. Rescuer died also.

5) Sewer Pipe - applying waterproof coating in sewer pipe using an airline from a compressor. The compressor generated CO and the employee died from CO poisoning. The compressor had no CO alarm nor a high temperature alarm. Rescuer died also.

6) Above Ground Pipe - employee entered a 24 inch pipe to grind a bad weld. Air quality was a concern so they provided 100% O_2 for ventilation. His clothes were oxygen enriched and the grinder's sparks ignited his clothing. He died from the burns.

7) Air Conditioning Unit - Air conditioning tech was purging lines with Freon 22. Freon built up and the employee died of "freon intoxication".

8) Grain Dryer - employee went to level out dessicant used to dry out the dryer and was asphixated. Vessel was purged with nitrogen two days earlier and not completely ventilated. Rescuer also died.

Per OSHA's proposed rule on confined space, 60% of the fatalities in confined spaces were the rescuer.

Section 5(a)(1) of the Occupational Safety and Health Act of 1970: The employer did not furnish employment and a place of employment which are free from recognized hazards that were causing or likely to cause death or serious physical harm to employees in that employees were exposed to the hazards of confined spaces:

Employees were installing concrete piping in a trench and entering a manhole to align and remove a laser. The employer did not carry out or enforce a confined space entry procedure and program requiring;

a) the training of all employees in confined space entry procedures,

b) the draining, cleaning, flushing, or isolation of all pipelines to the manhole or trench,

c) ventilation when there was the potential for the atmospheric conditions of the confined space to move out of the acceptable range,

d) the providing of a mechanical device to be available to retrieve personnel from manholes,

e) signs to be posted for the trench indicating a confined space,

f) a written emergency response plan,

g) the providing of a self-contained breathing apparatus for rescue personnel,

h) the training of rescue personnel in first aid and cardiopulmonary resuscitation techniques,

i) a written confined space entry procedure for the manhole and trench.

Among other methods, one feasible and acceptable abatement method to correct this hazard is to establish and enforce an adequate site **confined space entry program** such as that stipulated by ANSI Z117.1-1989, Safety Requirements for Confined Spaces. Such a program shall include as a minimum, the following elements:

1) Written procedures covering a permit system, ventilation, atmospheric testing, rescue procedures, and employee training.

2) The completion and posting of a warning sign and a confined space entry permit which requires authorization and approval in writing that specifies the location and type of work to be done and certifies that all existing and potential hazards have been evaluated by a qualified person designated by the employer, and necessary protective measures have been taken to ensure the safety of each worker.

3) Mechanical ventilation of the confined space prior to entry and continued ventilation to provide a safe atmosphere, when determined necessary as described in (above.

4) Testing the atmosphere of the confined space prior to entry and on a regular basis for the presence of sufficient oxygen (19.5% to 23.5%), hazardous levels of flammable or combustible vapors, and hazardous levels of toxic vapors or dusts.

5) Emergency rescue procedures with a requirement that trained personnel are available and are stationed outside the confined space with proper equipment to provide for the rescue of persons entering the confined space as determined necessary as described in (2) above. Such equipment must include a safety harness and lifelines with provisions for hoisting employees from the confined space via a mechanical lifting device. If entry is required for rescue, the rescuing employee must be equipped with an approved supplied air respiratory equipment and other appropriate personal protective equipment. NOTE: Under no circumstances is the standby person to enter the confined space until assured that adequate assistance is present.

6) Training of all employees required to enter the confined space. This training shall include procedures that will be required prior to entry and the hazards associated with confined spaces. Rescue personnel shall be trained in first aid and cardiopulmonary resuscitation techniques, and emergency response procedures.

7) Methods and weans shall be selected and used to prevent flammable, toxic, irritating, oxygen displacing gases and vapors, from entering the confined space. Pipelines shall be isolated by blinding, disconnection, removal, or double block and bleed, as needed to prevent entry of material(s) or hazardous contaminant(s). Pipelines between the confined space and points of isolation shall be drained, cleaned, or flushed of hazardous materials and known contaminants as necessary.

G - Rescue Considerations

As required by the standard (Section I, Paragraph (e)(8)), when personal fall arrest systems are used, the employer must assure that employees can be promptly rescued or can rescue personnel, ladders or other rescue equipment should be evaluated. In some situations, equipment which allows employees to rescue themselves after the fall has been arrested may be desirable such as devices which have descent capability.

H - Tie-off Considerations

(1) One of the most important aspects of personal fall protection systems is fully planning the system before it is put into use. Probably the most overlooked component is planning for suitable anchorage points. Such planning should ideally be done before the structure or building is constructed so that anchorage points can be incorporated during construction for use later for window cleaning or other building maintenance. If properly planned, these anchorage points may be used during construction, as well as afterwards.

ACCIDENT REPORT FATAL FACTS

U.S. Department of Labor
Occupational Safety and
Health Administration

No. 36

ACCIDENT SUMMARY

Accident Type	Asphyxiation
Weather	Warm, partly cloudy
Type of Operation	Sandblasting/ painting contractor
Crew Size	Four
Collective Bargaining?	No
Competent Safety Monitor on Site?	Yes
Safety and Health Program in Effect?	Limited
Was the Worksite Inspected Regularly by the Employer?	Yes
Training and Education Provided?	Inadequate
Employee Job Title	Sandblaster/Painter
Age/Sex	56/M
Experience at this Type Work	5 years on a permanently assigned crew
Time on Project	45 minutes

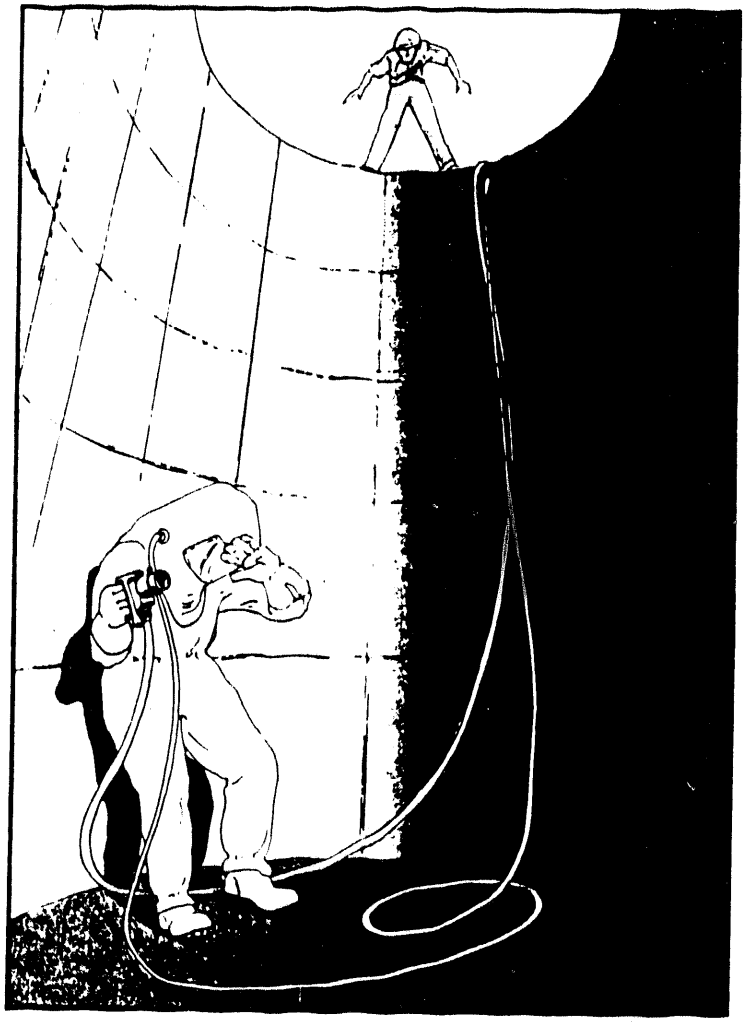

BRIEF DESCRIPTION OF ACCIDENT

A contract employee was assigned to sandblast the inside of a reactor vessel during turnaround activities at a petrochemical refinery. Instead of relying on the contract company's own air compressors in accordance with the contractor's policy, the contract foreman connected the employee's supplied air respirator to a hose containing what he thought was plant air. Instead it was nitrogen. Both hoses were identical except for markings at the shutoff valve. The sandblaster entered the vessel, descended to the bottom, placed the respirator hood on his head and was overcome.

ACCIDENT PREVENTION RECOMMENDATIONS

1. Employers must instruct employees to recognize and avoid unsafe conditions associated with their work (29 CFR 1926.21(b)(2)).

2. Contractors should follow a policy of using only their own air compressors or breathing air cylinders for their employees.

3. Middle and/or upper management personnel should routinely check first line supervisors to insure they are following established company safety policies.

SOURCES OF HELP

- Safety and Health Requirements for Working in Confined Space, a slide-tape training program including instructor's guide and class handouts, helps employees recognize potential sources of danger in confined spaces and explains how to select and use proper protective clothing and equipment. Available from the National Audio Visual Center, order No. A12793, for $90, prepaid, 8700 Edgeworth Dr., Capitol Heights, MD 20743-3701, telephone (301) 763-1896.
- Construction Safety and Health Standards (OSHA 2207) which contains all OSHA job safety and health rules and regulations (1926 and 1910) covering construction.
- OSHA-funded free consultation services. Consult your telephone directory for the number of your local OSHA area or regional office for further assistance and advice (listed under U.S. Labor Department or under the state government section where states administer their own OSHA programs).

NOTE: The case here described was selected as being representative of fatalities caused by improper work practices. No special emphasis or priority is implied nor is the case necessarily a recent occurrence. The legal aspects of the incident have been resolved, and the case is now closed.

ACCIDENT REPORT FATAL FACTS

U.S. Department of Labor
Occupational Safety and
Health Administration

No. 25

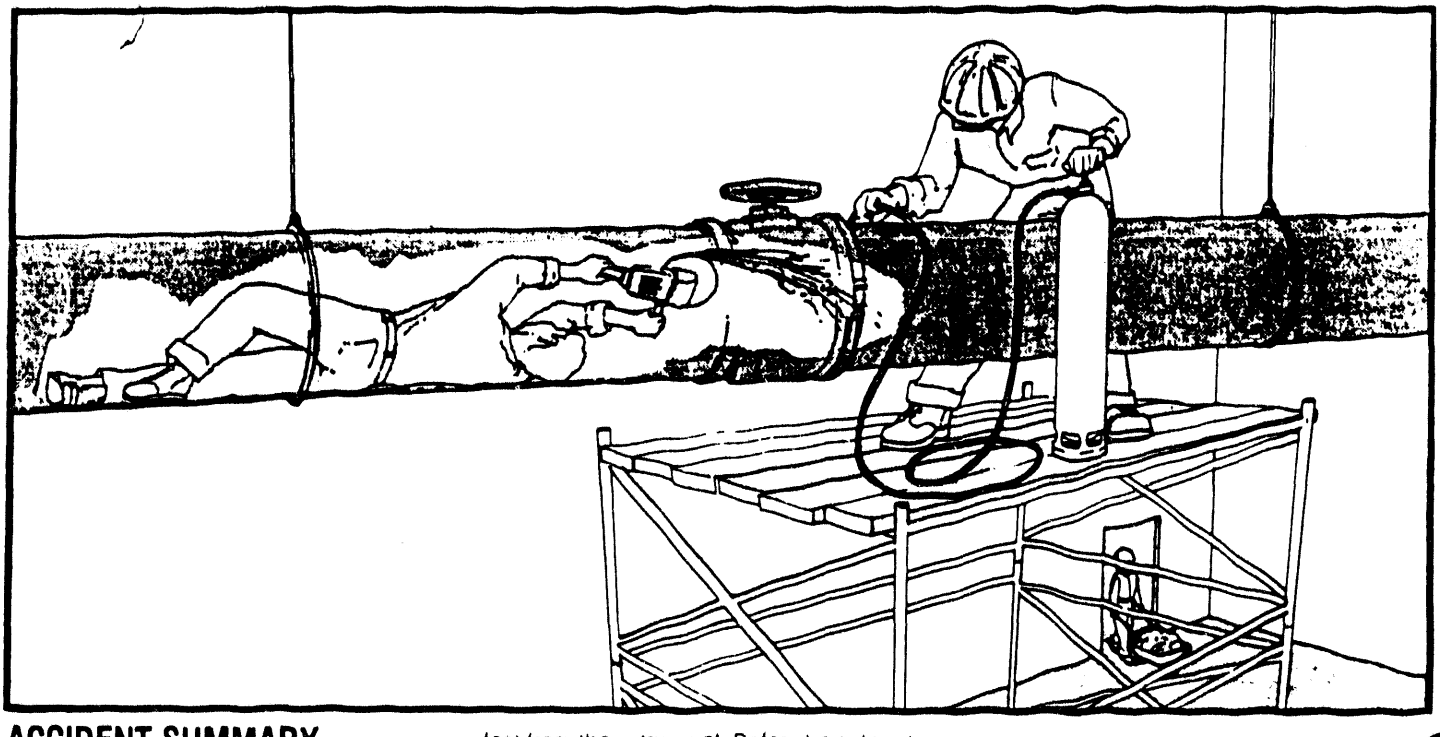

ACCIDENT SUMMARY

Accident Type	Fire/explosion
Weather	Fair and cold
Type of Operation	Installing water line
Crew Size	3
Collective Bargaining?	Yes
Competent Safety Monitor on Site?	Yes
Safety and Health Program in Effect?	No
Was the Worksite Inspected Regularly by Employer?	Yes
Training and Education Provided?	No
Employee Job Title	Welder
Age/Sex	28/M
Experience at This Type Work	2 years
Time on Project	2 months

BRIEF DESCRIPTION OF ACCIDENT

A welder entered a steel pipe (24 inch diameter) to grind a bad weld at a valve about 30 feet from the entry point. Before he entered, other crew members decided to add oxygen to the pipe near the bad weld. He had been grinding intermittently for about five minutes when a fire broke out enveloping his clothing. Another crew member pulled him 30 feet to the pipe entrance and extinguished the fire. However, the welder died the next day from his burns.

INSPECTION RESULTS

Following its inspection, OSHA issued three citations — one willful, one serious and one repeat. Had the cited standards been followed, this fatality might have been prevented.

ACCIDENT PREVENTION RECOMMENDATIONS

1. Do not use oxygen for ventilation, cooling or cleaning in welding operations. (29 CFR 1926.353(a)(b))

2. Comply with OSHA's required confined or enclosed space entry program (29 CFR 1926.21(b)(6)(i))

3. Train employees to recognize and avoid unsafe conditions associated with their work and make sure they understand the confined space entry program and follow its procedures (29 CFR 1926.21(b)(2) and 1926.20(b)(1)).

SOURCES OF HELP

- "Occupational Fatalities Related to Fire and/or Explosions in Confined Work Spaces as Found in Reports of OSHA Fatality/Catastrophe Investigations," available from the National Technical Information Service, 5285 Port Royal Rd., Springfield, Va. 22161, (703) 587-5650, publication no. PB 82-237-314, $13.00, pre-paid.
- Construction Safety and Health Standards (OSHA 2207) which contains all OSHA job safety and health rules and regulations (1926 and 1910) covering construction.
- OSHA-funded free consultation services. Consult your telephone directory for the number of your local OSHA area or regional office for further assistance and advice (listed under U.S. Labor Department or under the state government section where states administer their own OSHA programs).

NOTE: The case here described was selected as being representative of fatalities caused by improper work practices. No special emphasis or priority is implied nor is the case necessarily a recent occurrence. The legal aspects of the incident have been resolved, and the case is now closed.

CONTROL OF HAZARDOUS ENERGY SOURCES; FINAL RULE

PURPOSE

The purpose of this lesson is to introduce the participant to the requirements of the Control of Hazardous Energy (Lockout/Tagout) Final Rule, 29 CFR 1910.147.

OBJECTIVES

1. Describe four hazardous energy sources and the type of hazard they pose.
2. Given a situation involving potentially hazardous energy sources, apply correct standards from 29 CFR 1910. 147. Determine if the situation is in compliance with pertinent regulations, and describe appropriate energy control measures.
3. Describe three reasons why simply shutting off a machine provides insufficient worker protection when that machine requires service or maintenance work.
4. Discuss the limitations of tags.

REFERENCES

1. Control of Hazardous Energy Sources (Lockout/Tagout); Final Rule. 54 FR 36644.
2. 29 CFR 1910 General Safety and Health Standards, Department of Labor
3. Accident Prevention Manual for Industrial Operations: 9th ed. Vol I Engineering and Technology, National Safety Council.
4. Accident Prevention Manual for Industrial Operations: 9th ed. Vol II Administration and Programs, National Safety Council.
5. 29 CFR 1926 Safety and Health Regulations for Construction, Department of Labor.
6. Supervisors' Safety Manual, 7th ed. National Safety Council.
7. American National Standards for Personnel Protection Lockout/Tagout of Energy Sources-Minimum Safety Requirements". American National Standards Institute (ANSI), 1430 Broadway, New Your, NY 10018

DURATION

One hour

INSTRUCTOR MATERIALS

Course manual with instructors notes
Overhead projector/viewer assembly
VCR/TV

Battelle
Pacific Northwest Laboratory is operated for the U.S. Department of Energy by Battelle Memorial Institute.

Control of Hazardous Energy Sources 29 CFR 1910.147

Objectives

1. Describe four hazardous energy sources and the type of hazard they pose.
2. Given a situation involving potentially hazardous energy sources, apply correct standards from 29 CFR 1910.147. Determine if the situation is in compliance with pertinent regulations, and describe appropriate energy control measures.

Objectives

3. Describe three reasons why simply shutting off a machine provides insufficient worker protection when that machine requires service or maintenance work.
4. Discuss the limitations of tags.

The Control of Hazardous Energy (Lock Out/Tag Out)—1910.147

- 1910.147(a)(1) Scope
  - This standard covers the servicing and maintenance of machines and equipment in which the unexpected energization of these machines could cause injury to employees

Hazardous Energy Sources

- Unanticipated movement of equipment
- Inadvertent activation
- Self activation
- Short circuits

Purpose

- 1910.147(a)(3) requires employers to:
  - establish a written program
  - utilize procedures
  - train employees
  - conduct periodic inspections

Periodic Inspection—1910.147 (c)(6)

- " The employer shall conduct a periodic inspection of the energy control procedure at least annually to ensure that the procedure and the requirements of this standard are being followed."

Periodic Inspection

- Inspection by an impartial, authorized employee
- Inspection designed to correct any deficiencies
- Inspector shall review with each authorized employee their responsibilities
- Certification of inspection required

Training and Communication—1910.147(c)(7)

- Authorized employee training:
  - Hazardous energy recognition
  - Type and magnitude of energy present
  - Energy isolation and control methods
- Affected employee training:
  - The purpose and use of the energy control procedure
- Other employee training:
  - Hands off!

Retraining

- All authorized and affected employees shall be retrained whenever:
  - Change in job assignments, machines, equipment or process present a new hazard
  - Change in energy control procedures
  - Inspections or other information reveal inadequacies
- Certification of training required

Application of Control—1910.147 (d)

1. Preparation for shutdown: Notify all affected employees that a LOTO system is going to be utilized and why. The authorized employee shall know the type and magnitude of the involved energy and the hazards involved
2. Machine shutdown

Standardized Procedures

3. Machine or equipment isolation: Energy isolation devices shall be physically located and operated in such a manner as to isolate the machine from the energy source.
4. LOTO Device Application: The device shall be affixed by authorized employees.

Standardized Procedures

5. Stored energy: All potential energy shall be relieved, dissipated or released by blocking or bleeding down.
6. Verification of isolation: The authorized employee shall ensure that the machine has been completely deenergized.

Release From LOTO—1910.147 (e)

- Authorized employees ensure that:
  - machine is repaired and intact
  - tools and materials are removed
  - all employees are clear

Additional Requirements

- 1910.147 (f)(1) Required sequence for testing machines where LOTO must be temporarily removed
  1. Clear the area of tools and material
  2. Remove employees from the area
  3. Remove LOTO devices as above
  4. Energize and conduct testing
  5. Deenergize and follow proper LOTO procedures

Outside Contractors

- 1910.147(f)(2)
- Employer and contractor shall inform each other of their respective LOTO procedures.
- Employer shall ensure that their personnel understand and comply with the restrictions of the contractor.

Group Lockout

- 1910.147(f)(3)
- Procedures used shall provide equivalent protection as personal lockout
- One authorized employee is assigned responsibility for the group

Group Lockout

- When more than one crew, craft or department is involved, one authorized employee shall coordinate activities
- Each authorized employee shall apply their own lock to the group lockout device
- The best protection is afforded by individual locks for each employee

Shift or Personnel Changes

- 1910.147(f)(4)
- "Specific procedures shall be utilized during shift or personnel changes to ensure the continuity of lockout or tagout protection"

Limitations of Tags

- 1910.147(c)(7) When tagout systems are used, employees shall be trained in the limitations of tags:
  - are warning devices only and do not provide restraint
  - must be legible and understandable by all employees
  - must be able to withstand their environment
  - must be securely attached
  - cannot be removed except under special conditions

OFFICE SAFETY

PURPOSE

The purpose of this lesson is to acquaint the participant with office safety recommendations.

OBJECTIVES

1. List three principal causes of job-related injuries in offices.
2. State two potential health effects associated with work on video display terminals.
3. List three parameters of indoor air quality.

REFERENCES

1. 29 CFR 1910 General Safety and Health Standards, Department of Labor
2. Ergonomic Design for People at Work, Volumes 1 and 2, Eastman Kodak Co., 1983
3. Accident Prevention Manual for Industrial Operations: 9th ed. Vol I Engineering and Technology, National Safety Council
4. "Staff Report on the Oversight of OSHA with Respect to Video Display Terminals in the Workplace, " Subcommittee on Health and Safety, Committee on Education and Labor, House of Representatives, August 1985.
5. "Workplace Guidelines for VDT's," State of Washington Department of Labor and Industries, August 1985.

DURATION

One hour

INSTRUCTOR MATERIALS

Course manual with instructors notes
Overhead projector/viewer assembly
Video "Friday the 13th"

Battelle
Pacific Northwest Laboratory is operated for the U.S. Department of Energy by Battelle Memorial Institute.

Office Safety Guidelines

Objectives

1. List three principal causes of job-related injuries in offices.
2. State two potential health effects associated with work on video display terminals.
3. List three parameters of indoor air quality.

Principal Causes of Job-Related Injuries

- Falls
- Handling of materials or equipment
- Collisions with furniture or equipment
- Vehicle accidents
- Flying particles
- Handtool Injuries (pencils, staplers, etc.)

Hazard Control

- Eliminate Hazard
- Reduce Exposure to Hazard

Office Layout

- Gear layout to work flow
- Smooth traffic flow
- Unimpeded emergency exits and walkways
- Unobstructed views around corners
- Minimum of 3 feet between desks and 50 square feet per employee
- Floor should be one level whenever possible; steps between levels should be avoided

Office Furniture

- Avoid top-heavy file cabinets
- Bolt file cabinets together
- Open only one file cabinet drawer at a time
- Repair sharp edges or points on furniture
- Safety stops on drawers
- Chairs should be sturdy and widebased, with secure casters

Office Machinery and Equipment

- Secure creeping machinery
- Place machinery away from edges of desks or tables
- Maintain photocopy machines on a regular basis
- Use only guarded office fans -1910.212(a)(5)
- Use office fans with a substantial base
- Noncombustible waste cans

Floors

- Anti-slip
- Free of defective tiles or boards
- Repair or replace floor mats with curled edges or tears
- Use slip-resistant floor wax
- Prevent spills - use a tray or carton to carry beverages. When spills occur, wipe up immediately

Stairs and Aisles

- Minimum recommended width—4 feet
- Should be unobstructed
- Skid-resistant coating especially on stairs
- Areas with one or two steps leading to other levels should be clearly marked

Doors

- Use paint or decals on plain glass doors. Frosted glass should be used whenever possible
- Use safety glass for glass doors
- Reduce swing radius of door by placing object along wall next to swing radius

Electrical Safety

- Properly ground all equipment
- Replace frayed or worn cords
- Cords should not cross walking areas or come into contact with radiators, steampipes
- Outlets should accommodate 3-wire grounding plugs

Electrical Safety

- Machinery should be Underwriters Listed
- Machinery should be turned off when not in use
- Guard live parts of electrical equipment operating at 50+ volts against contact with cabinets or enclosures-1910.303(g)(2)

Storage of Materials

- Secure stored material
- Prohibit smoking around flammable and combustible materials
- Clearly label all containers
- Store heavy items on lower shelves; store lighter items on upper shelves
- Stored materials should not create a tripping hazard

Safety Programs

- Provisions of program
  - Use good housekeeping procedures
  - Use hand rails on stairways
  - Do not carry material so that vision is obstructed
  - Do not stand in front of doors
  - Keep to right side in hallways and aisles
  - Suitable footwear

Battelle

Pacific Northwest Laboratory is operated for the U.S. Department of Energy by Battelle Memorial Institute.

Ergonomics and Human Factors

Ergonomics and Human Factors

- Ergonomics—the interaction between humans and their environments

Lighting

- Do not face employees toward windows, unshaded lamps, or other sources of glare.
- Walls should not reflect light
- In VDT areas, lighting should not exceed 50 footcandles (or 500 lux)

Potential Health Effects of Video Display Terminals

- Eye Strain
- Musculoskeletal Strain
- Radiation
- Stress

Eye Strain

- To reduce eye strain during VDT use:
  - Look away from your work periodically, focusing on distant objects for a few seconds
  - Alternate VDT work with other tasks
  - Remember to blink
  - Use indirect lighting to control glare

Radiation and VDT Use

- Types of Radiation Emitted from VDTs
  - Ultraviolet
  - Radio-frequency
  - Infrared
  - X-ray
  - Ultrasound

Sources of Stress in VDT Use

- Ergonomics and Human Factors
- Methods of monitoring employee performance
- Incentive pay schemes
- Inadequate employee training
- Job security issues
- Lack of worker participation in planning for VDT use

Parameters of Acceptable Indoor Air Quality

- Carbon Dioxide
  - <600 ppm
    - Usually few complaints of discomfort at this level
  - 600-1,000 ppm
    - Occasional complaints of headache, drowsiness, stuffiness, eye and throat irritation
  - >1,000 ppm
    - Frequent complaints of symptoms listed above

Parameters of Acceptable Indoor Air Quality

- Temperature
  - Winter: 68-76°F is recommended
  - Summer: 73-79°F is recommended
- Humidity
  - Comfort Range: 20-60% (40% is optimum)

Other Parameters of Indoor Air Quality

- Formaldehyde
  - Ozone
  - Total Suspended Particulate
  - Volatile Organic Compounds
  - Carbon Monoxide

Muscle Strain - VDT Ergonomics

- To reduce the incidence of muscle strain or fatigue:
  - Use chairs with adjustable height, backrest, and tension
  - Use independently adjustable screens and keyboards
  - Flexible workstation
  - Alternate VDT and non-VDT tasks
  - Educate workers in VDT equipment and furniture use

Ergonomics Program Management Guidelines

- Management Commitment & Employee Involvement
- Program Elements
  - Worksite Analysis
  - Hazard Prevention & Controls
  - Medical Management
  - Training & Education

Management Commitment & Employee Involvement

- Commitment by Top Management
- Written Program
- Employee Involvement
- Regular Program Review and Evaluation

Program Elements

- Worksite Analysis
- Hazard Prevention and Control
  - Engineering Controls
  - Work Practice Controls
  - PPE
  - Administrative Controls

Training and Education

- All affected employees
- Engineers and maintenance personnel
- Supervisors
- Managers
- Health care providers

Ergonomics and Hand Tool Use

- The following positions and movements of the hand or wrist should be avoided:
  - Extension
  - Flexion
  - Radial Deviation
  - Ulnar Deviation
  - Pronation
  - Supination

Ergonomics of the Hand and Wrist

- To reduce the risk of hand and/or wrist disorders:
  - Avoid repetitive tasks which require the use of harmful hand or wrist positions
  - Use job rotation between ergonomically sound tasks to vary tendon stresses
  - Encourage relief exercises for workers

Ergonomics of the Hand and Wrist

- To reduce the risk of hand and/or wrist disorders:
  - Keep the work in front of the worker
  - Design the point of operation to allow use of a neutral wrist position
  - Use a power grip rather than a pinch grip whenever possible
  - Use a compressible gripping surface to minimize slippage and reduce grip force requirements

Ergonomics and Non-Power Tools

- Handle diameters should be selected to maximize grip strength
- Tools should be of minimum weight required to perform the task
- The center of gravity of the tool should be close to the center of the grip

Ergonomics and Non-Power Tools

- The tool should be bent - not the wrist
- Plier-like tools should open automatically
- Tool handles should be rounded - avoid sharp edges
- Tool handles should be long enough to minimize pressure on the palm of the hand

Ergonomics of Power Tools

- Use triggers with forefinger action whenever possible
- Use supports to minimize tool weight
- Avoid the use of triggers with high tension springs
- Utilize tools with variable torque settings which are easily adjusted

U.S. Department of Labor
Program Highlights

Fact Sheet No. OSHA 87-24

SAFETY WITH VIDEO DISPLAY TERMINALS

The Occupational Safety and Health Administration (OSHA) is often asked about possible safety and health problems associated with video display terminals (VDTs). Some concerns include high voltage electricity, ergonomics and noise. But the greatest interest is in whether radiation emitted by VDTs poses any problem, particularly to pregnant women.

OSHA has no standards that apply specifically to video display terminals. However, OSHA does have standards to protect employees against overexposures to radiation, noise and electrical hazards.

RADIATION: The National Institute for Occupational Safety and Health (NIOSH), the U.S. Army Environmental Hygiene Agency, and others have measured radiation emitted by VDTs. The tests show that levels for all types of radiation are below those allowed in current standards. In fact, some measurements show radiation levels so low that they cannot be distinguished from general environmental radiation (background radiation).

Currently, OSHA has no reliable information that any birth defect has ever resulted from a pregnant woman working at a video display terminal. However, the possible effects of radiation from VDTs on pregnancies continue to concern employees. Therefore, NIOSH and others are currently conducting major studies to thoroughly investigate any potential problems.

NOISE AND ELECTRICAL HAZARDS: It is unlikely that noise exposures in a typical office setting, even in an office with a pool of VDTs, would exceed OSHA standards. However, a cluster of high-speed printers without sound screens could produce some questionable noise levels.

Noise levels should be kept within comfortable limits. Sound sources that are unacceptably noisy should be shielded by sound absorbent screens or hoods or placed in a separate room. Absorbent materials such as acoustical ceiling tile, carpets, curtains, and upholstery can also cut noise.

OSHA has a number of electrical requirements applicable to VDTs. The equipment must be properly installed, used, and grounded to ensure employee safety.

PHYSICAL DISCOMFORTS: Video display operators do sometimes report eye fatigue and irritation, blurred vision, headaches, dizziness, and pain or stiffness in the neck, shoulders, back, arms, wrists and hands. These problems usually can be corrected by adjusting the physical and environmental setting where the VDT users work. The relation of the operator to the keyboard and the screen, the operator's posture, the lighting, and the background noise should be carefully examined to prevent discomfort.

LIGHTING: Work stations and lighting should be arranged to avoid reflections on the screen or surrounding surfaces. Light should be directed so that it does not shine into the operator's eyes when the operator is looking at the screen.

Normal office lighting can be supplemented by individual "task lighting" at a workstation if necessary. Task lighting enables operators to adjust lighting to their individual preferences.

GLARE: Glare can result from light reflecting on a VDT screen or shiny keyboard. Anti-reflective screen treatment can be added to a VDT screen, and later model keyboards usually have an anti-glare matte finish. To avoid glare, display screens may be placed near a window so the line of sight between eye and screen is parallel to the window surface or the windows can be shielded to reduce excess sunlight. Walls painted with a nonreflective medium-to-dark paint can minimize glare.

WORKSTATION DESIGN: An individual work station should provide the operator with a comfortable sitting position sufficiently flexible to reach, use, and observe the screen, keyboard, and document. Some general guidelines to minimize fatigue include:

-- Posture support: The seat and backrest of the chair should support a comfortable posture permitting occasional variations in the sitting position. Chair height and backrest angle should be easily adjustable. A foot rest may be necessary for short individuals.

-- Arms: When the operator's hands are resting on the keyboard, the upper arm and forearm should form a right angle. The hands should be in a reasonably straight line with the forearm. Long or unusually high reaches should be avoided. Armrests should permit periodic support as needed.

-- Legs and feet: The chair height is correct when the entire sole of the foot can rest on the floor or footrest and the back of the knee is slightly higher than the seat of the chair. This allows the blood to circulate freely in the legs and feet.

-- Adjustment of screen position: Screens which swivel horizontally and tilt or elevate vertically enable the operator to select the optimum viewing angle.

-- Work station surface: The table or work station should suit the kind of task to be done. It should be large enough for any reference books, files, telephone, or text and also permit different positions of the screen and keyboard. Adjustable surface height is an advantage.

-- Eye and screen: The topmost line of the display should not be higher than the user's eyes. The screen and document holder should be the same distance from the eye (to avoid constant changes of focus) and close together so the operator can look from one to the other without excessive movement of the neck or back. The incline of the document holder should be adjustable. Legibility is a prime consideration in selecting a display screen. This also applies to document selection. Legibility factors to be considered include: symbol size and design, contrast, and sharpness.

-- Adjustment of the keyboard: A movable keyboard is a plus. It can be arranged to suit the type of work and the need to consult documents or notes.

TASK CONSIDERATIONS: The type of task performed on a VDT influences the development of fatigue. Therefore, in designing a work station, the type of tasks a worker does should be considered when placing the screen and keyboard. Whatever the task, it is desirable for the operator to have some "job control" -- the opportunity to pace the work, add mini-breaks, or change desk positions.

######

OFFICE SAFETY CHECKLIST

Location: _____ Office: _____

	Unsatisfactory (Enter Notes)	Satisfactory (Check)
1. Trip and fall hazards		
a. Uneven tile, cracks		
b. Electrical cords		
c. Receptacle location		
d. Door stops		
e. Level change		
f. Open drawers		
g. Doors hard to open		
h. Slippery floor surface		
i. Loose carpet		
j. Loose molding		
k. Protruding objects		
l.		
m.		
2. Falls from another level:		
a. Access to supplies		
b. Ladders		
c. Heavy material stored on uppershelves		
d. Step stools		
e. Stairwells		
f. Escalators		
g.		
h.		

	Unsatisfactory (Enter Notes)	Satisfactory (Check)
3. Housekeeping:		
a. Paper clips		
b. Rubber bands		
c. Pencils		
d. Cigarette butts		
e. Waste paper		
f. Spills		
g. Office arrangement cluttered		
h.		
i.		
4. Electrical equipment:		
a. Equipment grounded		
b. Electrical cords		
5. Mechanical equipment:		
a. Guarded		
b. Location		
6. Equipment secure:		
a. Typewriter/word processor		
b. Calculator		
c. File cabinets - anchored to floor or wall with bolts - or to each other		
d. Other electrical equip.		

	Unsatisfactory (Enter Notes)	Satisfactory (Check)
7. Chemicals:		
a. Flammable		
b. Toxic		
c. Storage		
d. Labeled		
e. Typewriter cleaning solvent		
8. Chairs or stools:		
a. Sturdy		
b. No sharp edges		
c. Properly adjusted		
9. Storage of sharp objects:		
a. Razor blades		
b. Knives		
c. Thumb tacks		
d. Shears		
e. Pins		
f. Paper cutters		
g.		
h.		

	Unsatisfactory (Enter Notes)	Satisfactory (Check)
10. Emergency and safety equipment:		
a. Fire exit		
b. Fire extinguishers and marking		
c. Emergency phone number		
d. Emergency evacuation procedure		

11. Other items:

CHAPTER 8

RECOMMENDATIONS

This chapter outlines load limit recommendations for lifting tasks. Sections on how to identify a hazardous lifting job, how to interpret the guidelines and how to apply them to actual lifting situations are provided. In addition, brief summaries of Chapter 6, Administrative Controls and Chapter 7, Engineering Controls, are included.

It is intended that this chapter will provide the Industrial or Safety Engineer with an easy means to quickly scan the Guide, pick out important points and apply them to the appropriate situation. References to earlier chapters are made if a more thorough and detailed discussion of a topic is desired.

DEFINITION OF A LIFTING TASK

For the purpose of this Guide, a lifting task is considered to be the act of manually grasping and raising an object of definable size without mechanical aids (i.e., hoists, conveyors, block and tackle, etc.). The time duration of such an act is normally less than two seconds, and thus little sustained exertion is required (as opposed to holding or carrying activities). The lifting limits presented in this chapter do not apply to all kinds of lifts. They are intended to apply only for:

a. smooth lifting
b. two-handed, symmetric lifting in the saggital plane (directly in front of the body; no twisting during lift)
c. moderate width, e.g., 75 cm (30 in) or less
d. unrestricted lifting posture
e. good couplings (handles, shoes, floor surface)
f. favorable ambient environments.

It is assumed that other manual handling activities such as holding, carrying, pushing, pulling, etc., are minimal. When not engaged in lifting activities, the individual is assumed at rest. The assumed work force is physically fit and accustomed to physical labor.

<u>The Guide does not include "safety factors" commonly used by engineers to assure that unpredicted conditions are accommodated.</u>

LIFTING TASK VARIABLES

The primary task variables identified earlier in this Guide on the basis of epidemiology (Chapter 2), biomechanics (Chapter 3), physiology (Chapter 4) and psychophysics (Chapter 5) of lifting include:

1. Object weight (L) - measured in kilograms (pounds)

2. Horizontal location (H) - of the hands at origin of lift measured forward of the body centerline or midpoint between ankles (in centimeters or inches)

3. Vertical location (V) - of the hands at origin of lift measured from floor level in centimeters (inches)

4. Vertical travel distance (D) - from origin to destination of lift in centimeters (inches)

5. Frequency of lifting (F) - average number of lifts per minute

6. Duration or period - assumed to be occasional (less than one hour) or continuous (8 hours)

The latter two variables (lift frequency and period) are the most difficult to define and consequently measure and provide guidance. For the purpose of this Guide jobs will be grossly classified in three categories:

1. Infrequent - either occasional or continuous lifting less than once per 3 minutes

2. Occasional high frequency - lifting one or more times per 3 minutes for a period up to 1 hour

3. Continuous high frequency - lifting one or more times per 3 minutes continuously for 8 hours.

Evidence presented in earlier chapters shows that for <u>infrequent lifting</u> a person's musculoskeletal strength (Chapter 5) and potential high stress to the back (Chapter 3) are the primary limitations to ability. As such, biomechanical variables are predominant in determining hazard. <u>Occasional high frequency lifting</u> results in psychophysical stress (Chapter 5) and possible muscle fatigue as the primary limitations. For <u>continuous, high frequency lifting</u> the primary limitations are based on cardiovascular capacity and metabolic endurance (Chapter 4).

Table 8.1 summarizes which task variables are emphasized by the four approaches examined in Chapters 2-5. A careful review of these approaches shows two important points. First, all of the task variables are highly interactive. In other words, the

Table 8.1: Emphasis on task variables by alternative approaches.

	Epidemiology (Ch. 2)	Biomechanics (Ch. 3)	Physiology (Ch. 4)	Psychophysics (Ch. 5)
Object Weight (L)	X	X	X	X
Horizontal Location (H)	X	X	X	X
Vertical Location (V)	X	X	X	X
Travel Distance (D)			X	X
Frequency of Lift (F)	X		X	X
Duration or Period (P)			X	

importance of object weight (for example) is highly dependent on where the weight is located (horizontally and vertically), how far it must be moved, and how frequently. Thus, none of these variables should be evaluated independently.

Secondly, the four approaches taken separately may lead to different conclusions. For example, metabolic criteria (Chapter 4) can lead one to believe lifting heavy loads infrequently is preferred to frequent lifting of lesser loads (due to the cost of moving the body). From a biomechanical or strength point of view, (Chapters 3, 5) object weight should be minimized regardless of frequency.

Another example has to do with object location. A person is generally strongest when lifting with the legs and back. Were strength the only criterion, (Chapter 5) one would favor leaving

objects on the floor rather than on shelves. Of course, biomechanical low back compression (Chapter 3) and cardiovascular (Chapter 4) criteria would deem this least desirable.

CRITERIA FOR GUIDELINE

It is concluded, regardless of the approach taken to evaluate the physical stresses of lifting, that a large individual variability in risk of injury and lifting performance capability exists in the population today. This realization requires that the resulting controls be of both an engineering and administrative nature. In other words, there are some lifting situations which are so hazardous that only a few people could be expected to be capable of safely performing them. These conditions need to be modified to reduce stresses through job redesign. On the other hand, some lifting conditions may be safely tolerated by some people, but others, particularly weaker individuals, must be protected by an aggressive selection and training program. To specifically define these conditions two limits are provided based on epidemiological, biomechanical, physiological, and psychophysical criteria.

1. Maximum Permissible Limit (MPL)

   This limit is defined to best meet the four criteria:

   a. Musculoskeletal injury rates and severity rates have been shown to increase significantly in populations when work is performed above the MPL.

   b. Biomechanical compression forces on the L_5/S_1 disc are not tolerable over 650 kg (1430 lb) in most workers. This would result from conditions above the MPL.

   c. Metabolic rates would exceed 5.0 Kcal/minute for most individuals working above the MPL.

   d. Only about 25% of men and less than 1% of women workers have the muscle strengths to be capable of performing work above the MPL.

2. Action Limit (AL)

   The large variability in capacities between individuals in the population indicates the need for administrative controls when conditions exceed this limit based on:

   a. Musculoskeletal injury incidence and s verity rates increase moderately in populations exposed to lifting conditions described by the AL.

b. A 350 kg (770 lb) compression force on the L_5/S_1 disc can be tolerated by most young, healthy workers. Such forces would be created by conditions described by the AL.

c. Metabolic rates would exceed 3.5 for most individuals working above the AL.

d. Over 75% of women and over 99% of men could lift loads described by the AL.

Thus, properly analyzed lifting tasks may be of 3 types:

1. those above the MPL should be viewed as unacceptable and require engineering controls

2. those between the AL and MPL are unacceptable without administrative or engineering controls

3. those below the AL are believed to represent nominal risk to most industrial workforces.

To illustrate this point, Figure 8.1 shows the three regions and boundaries defined for infrequent lifting (F < .2) from the floor (V = 15 cm [6 in]) to knuckle height (D = 60 cm [24 in]). Depending on the size of the object, in terms of horizontal hand location, the maximum weight which can be lifted can be determined

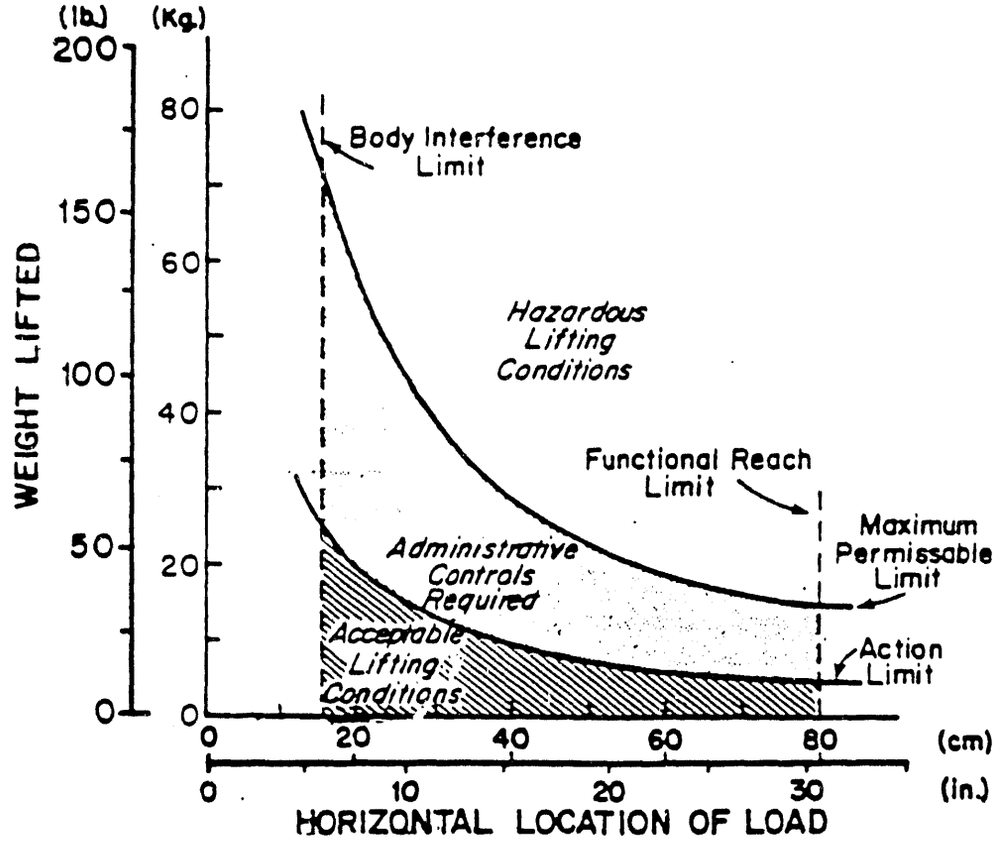

Figure 8.1: Maximum Weight versus Horizontal Location for Infrequent Lifts from Floor to Knuckle Height

GUIDELINE LIMITS

With the large number of task variables (5 in this case) which modify risk during lifting it is virtually impossible to provide a simple yet accurate procedure for evaluating all possible jobs. This problem is further complicated by the need to satisfy four separate criteria (epidemiological, biomechanical, physiological, and psychophysical). The following guideline is the simplest form known which best satisfies the four criteria.

In algebraic form:

$$AL\ (Kg) = 40(15/H)(1-.004|V-75|)(.7+7.5/D)(1-F/F_{max}) \text{-metric units}$$

or

$$AL\ (lb) = 90(6/H)(1-.01|V-30|)(.7+3/D)(1-F/F_{max}) \text{-U.S. Customary units}$$

$$MPL = 3\ (AL)$$

where H = horizontal location (centimeters or inches) forward of midpoint between ankles at origin of lift

V = vertical location (centimeters or inches) at origin of lift

D = vertical travel distance (centimeters or inches) between origin and destination of lift

F = average frequency of lift (lifts/minute)

F_{max} = maximum frequency which can be sustained (see Table 8.2)

For purposes of this Guide, these variables are assumed to have the following limits.

1. H is between 15 cm (6 in) and 80 cm (32 in). Objects cannot, in general, be closer than 15 cm (6 in) without interference with the body. Objects further than 80 cm (32 in) cannot be reached by many people.

2. V is assumed between 0 cm and 175 cm (70 in) representing the range of vertical reach for most people.

3. D is assumed between 25 cm (10 in) and (200-V) cm [(80-V) in]. For travel less than 25 cm, set D = 25.

4. F is assumed between .2 (one lift every 5 minutes) and F_{max} (see Table 8.2). For lifting less frequently than once per 5 minutes, set F = 0.

Table 8.2: F_{max} Table.

PERIOD	AVERAGE VERTICAL LOCATION (cm)(in) $V > 75$ (30) Standing	$V \leq 75$ (30) Stooped
1 hour	18	15
8 hours	15	12

The above equations for the action limit (AL) and maximum permissable limit (MPL) represent a multiplicative factor weighting for each task variable. The first factor

$$H \text{ Factor} = (15/H)$$

represents the importance of the horizontal location (H). If H = 15 cm this factor is 1 and no adjustment for horizontal location is necessary. If H = 75 cm, this factor is 15/75 = .20 meaning the AL is reduced from 40 to 40(.20) = 8 kg.

The factor for vertical location involves the absolute deviation of V from 75 cm (approximate knuckle height). For V = 75, the V factor is

$$V \text{ Factor} = (1-.004|V-75|)$$

$$= (1-.004(0)) = 1$$

For V = 15,

$$V \text{ Factor} = (1-.004|15-75|)$$

$$= 1-.004(60) = .76$$

Likewise for V = 135,

$$V \text{ Factor} = (1-.004|135-75|)$$

$$= 1-.004(60) = .76$$

Likewise, the D factor ranges from 1 to .74 as D varies from 0 to 200 cm.

$$\text{D Factor} - (.7+7.5/D)$$

For D = 0 set D = 25 (the minimum allowed value), then

$$\text{D Factor} = (.7+7.5/25) = 1.0$$

For D = 200,

$$\text{D Factor} = (.7+7.5/200) = .74$$

The F factor is a bit more complicated. If the lifting originates below 75 centimeters (on the average $V \leq 75$) and is performed continuously throughout the day, $F_{max} = 12$ (as given in Table 8.2). If the observed frequency is 6 lifts per minute (F = 6) then,

$$\text{F Factor} = (1-F/F_{max})$$

$$= 1-6/12 = .5$$

The effective weight which can be lifted is thus halved due to frequency of lifting required.

Combining factors is illustrated for continuous lifting below knuckle height with average H = 20 cm, V = 40 cm, an average distance of D = 100 cm, at a rate of 6 lifts per minute; then

$$AL = 40\ (15/20)(1-.004|40-75|)(.7+7.5/100)(1-6/12)$$

$$= 40\ (.75)(.86)(.78)(.5) = 10 \text{ kg.}$$

$$MPL = 30 \text{ kg.}$$

The mechanics of this example would be exactly the same using the U.S. Customary form of the equation and the task variable limits given on page 120. The weight handled on the job could be compared directly with these values. Suppose the load was 35 kg (above the MPL). In this case, one "engineering control" might be to reduce the frequency of lifting from 6 per minute to 1 per minute (admittedly a drastic change). This would increase the frequency factor from .5 to .92 and consequently the

$$AL = 18.4, \text{ and}$$

$$MPL = 55.2$$

Viewing the relative weights of each factor (.75)(.86)(.75)(.50) in this case allows a quick evaluation of the relative weights associated with changes in any factor. Frequency of lifting is the biggest discounting factor (.5) in this case and should receive first consideration.

Reducing frequency to 1 lift per minute would lower the stressfulness of the job to within the "administrative controls" region. In this case, 35 kg is between AL = 18.4 and MPL = 55.2. This should not preclude further "engineering controls". It is important to realize that the job still cannot be safely performed by most women or the majority of men. Further reductions in the frequency (factor = .92) would be ineffective since this factor can only increase to 1.0. The load probably cannot be brought appreciably closer to the body (H = 15 versus H = 20 cm).

The best engineering solution at this point would be to change the load weight. Halving the weight (from 35 kg to 18 kg) would be one solution to achieving a task within the capabilities of most people (18 kg is less than AL = 18.4 kg). An equally acceptable solution would be to increase the load to 100 or more kg and provide mechanical lifting aids thus precluding manual handling and relieving the person of lifting altogether.

JOB PHYSICAL STRESS EVALUATION

The purpose of the job physical demands evaluation is to identify, quantify and document the physical stresses associated with a given job. This section outlines how such an evaluation should be performed so that the guidance of the previous section may be applied.

Selection of Analysts

All job analyses should be performed by an individual who has experience in work measurement and who is thoroughly familiar with the plant and the jobs done in it. The analyst should know the prescribed methods of performing these jobs and should be aware of all tasks (including any irregularly occurring tasks) associated with the job.

Selection of Employees

Only experienced employees who routinely perform their work according to job descriptions and who work at a normal pace should be selected for measurement during the job evaluation. This will assure that the job description accurately describes the work performed.

Selection of Jobs

Jobs should be rank ordered by incidence and severity rates of musculoskeletal disorders. Jobs with the highest rank should be studied first. The primary source used to formulate this sort of

job ranking should come from medical information (if available) such as:

- medical reports
- first aid reports
- OSHA 101 forms
- worker's compensation payments

Things to look for on these reports include:

1. musculoskeletal injuries, particularly back injuries

   - overexertion
   - strains/sprains
   - contact injuries such as:
     - lacerations
     - bruises
     - abrasions
     - fractures

2. what job the injury occurred on so that a total for each job can be compiled

3. how much lost time was associated with each injury. In the absence of medical records, stressful jobs can be identified by information obtained from line supervisors or foremen for a particular job, such as:

   - is there a high turnover rate?
   - is there frequent absenteeism?
   - are there frequent sprain/strain complaints?

Analysis Procedures

All data collected should be organized on a "Physical Stress Job Analysis Sheet" (see Figure 8.2). The exact form is, of course, optional but it should include background and identification information for each job such as date, plant name, department, analyst's name and job title as well as the task descriptors to be measured. These are:

1. Weight of the object lifted - determined by direct weighing. If this varies from time to time, note the average and maximum weights.

2. The position of the load with respect to the body - this must be measured at both the starting and ending points of a lift in terms of horizontal and vertical location. The horizontal location from the body (H) is measured from the midpoint of the line joining the ankles to the midpoint at which the hands grasp the object while in the lifting position. The vertical component is

PHYSICAL STRESS JOB ANALYSIS SHEET

DEPARTMENT _____ DATE _____

JOB TITLE _____ ANALYST'S NAME _____

TASK DESCRIPTION	OBJECT WEIGHT		HAND LOCATION				TASK FREQ	AL	MPL	REMARKS
			Origin		Destination					
	Ave	Max	H cm	V cm	H cm	V cm				

Figure 8.2: Example Coding Form.

determined by measuring the distance from the floor to the point at which the hands grasp the object. The co-ordinate system is illustrated in Figure 8.3.

These measures are repeated for the ending point of the lift (in the lifting position) and all four values are recorded on the job analysis sheet.

It these four values vary from task to task (e.g., stacking cartons on top of each other), the job must be separated into elements and each element evaluated. Examples later will suggest ways to handle such situations.

To be precise, the H value should be measured as described in item 2. However, a convenient rule of thumb is H = (W/2+15) cm or (W/2+6) in, where W = the distance of the load away from the body measured in the horizontal axis (fig. 8.3).

3. Frequency of lift - this should be recorded on the job analysis sheet in average lifts/min. for high frequency jobs. A separate frequency should be entered for each distinguishable job task.

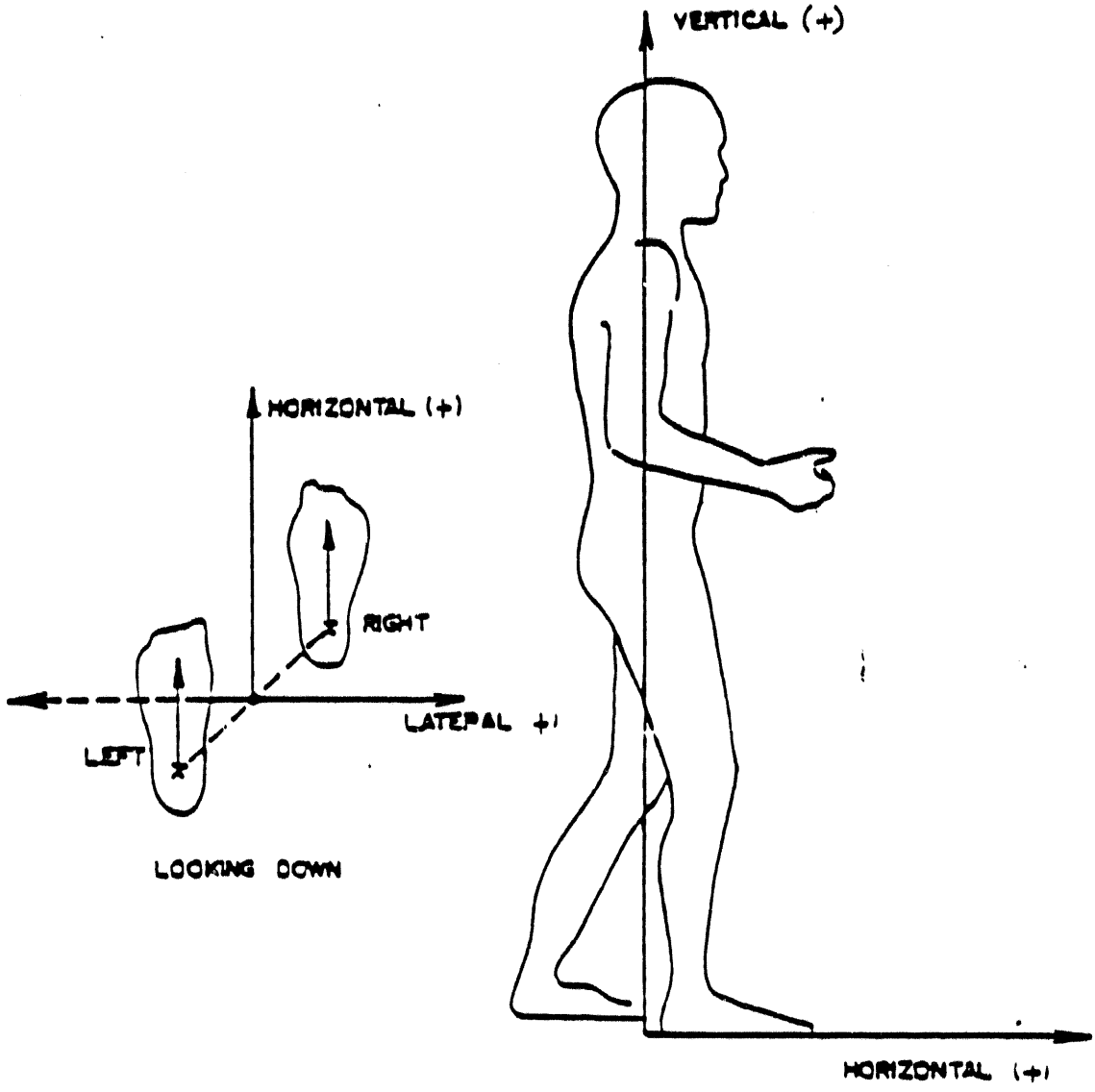

Figure 8.3 Graphic Representation of Vertical, Lateral and Horizontal Axes.

4. Period (or Duration) - the total time engaged in lifting should be noted. This need only be defined as less than one hour or more than one hour for the purposes of this Guide.

Figures 8.4 through 8.7 illustrate the factor weights for each of the above task variables. These nomograms allow the analyst to quickly determine the correct factor adjustments to be applied for each variable in order to complete the latter columns of the job

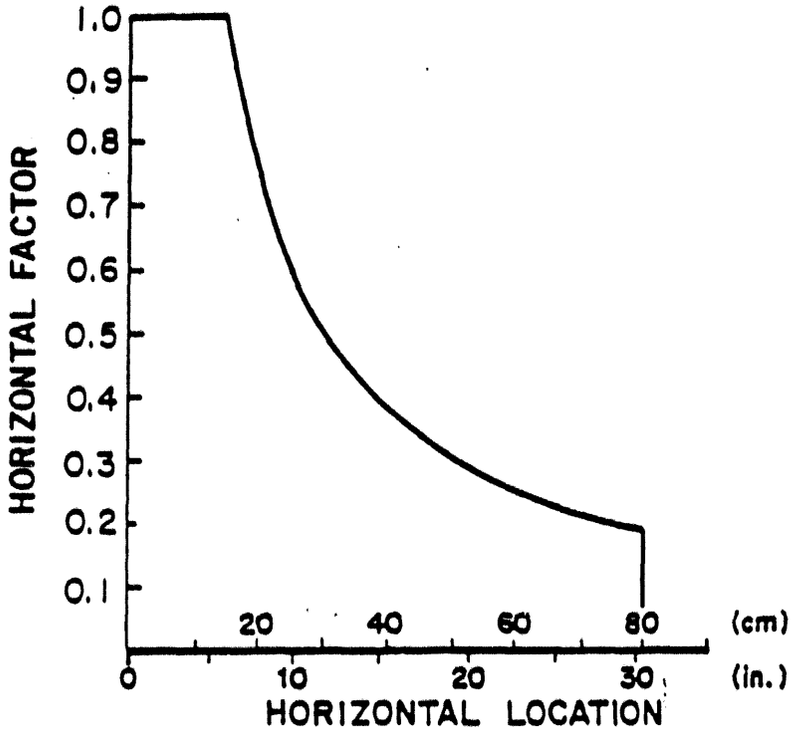

Figure 8.4: Horizontal Factor Nomogram.

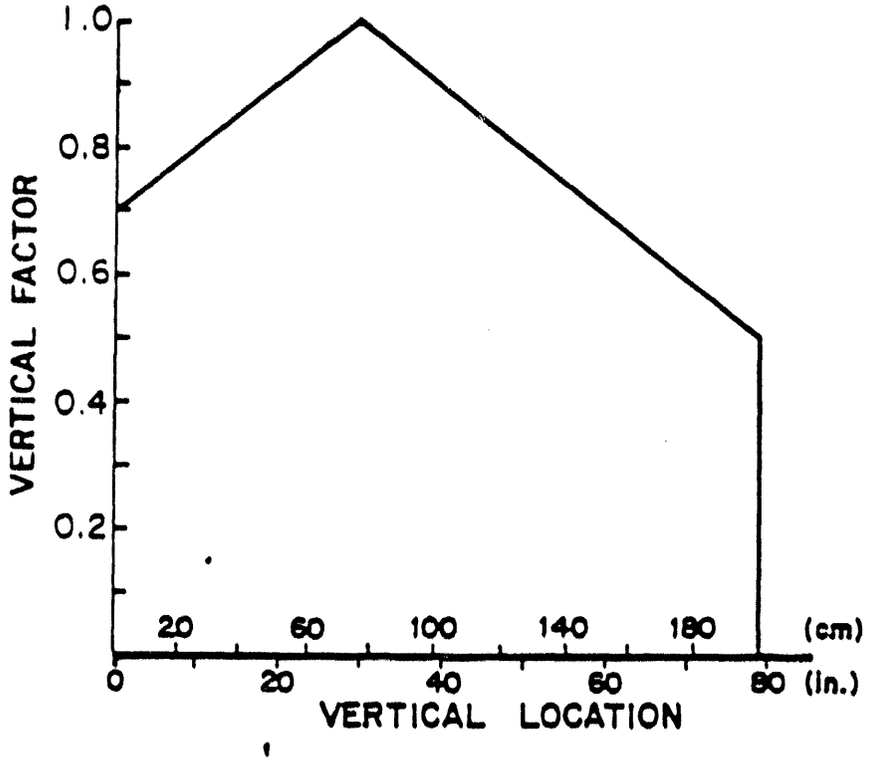

Figure 8.5: Vertical Factor Nomogram.

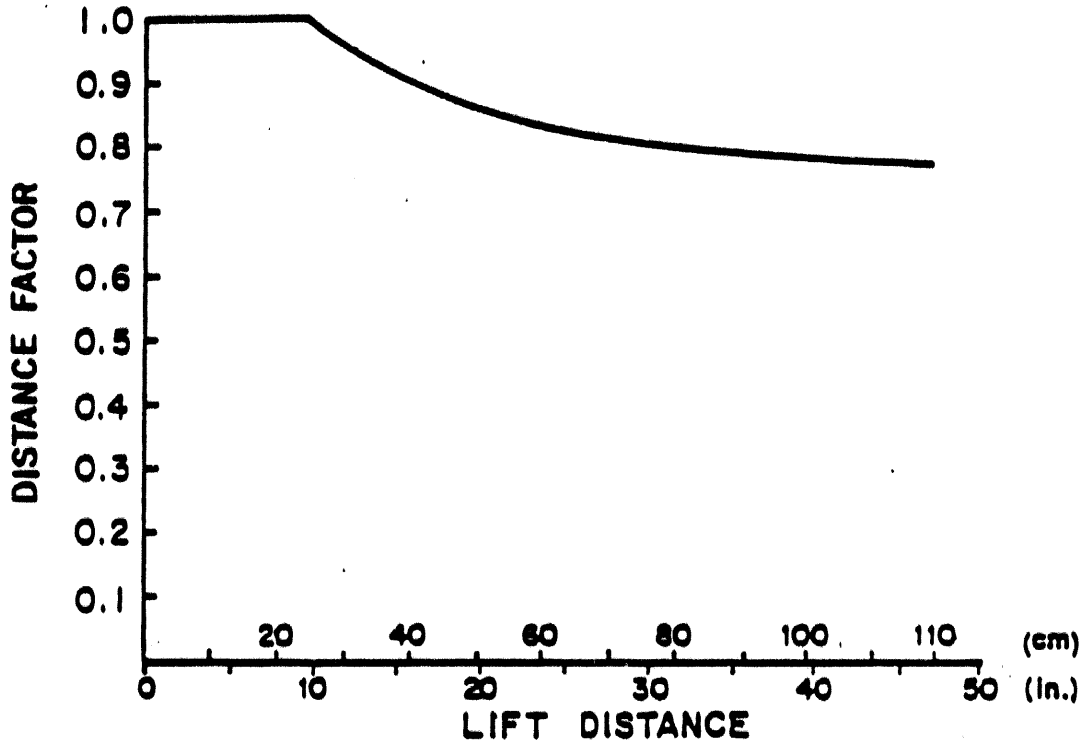

Figure 8.6: Vertical Distance Factor Nomogram.

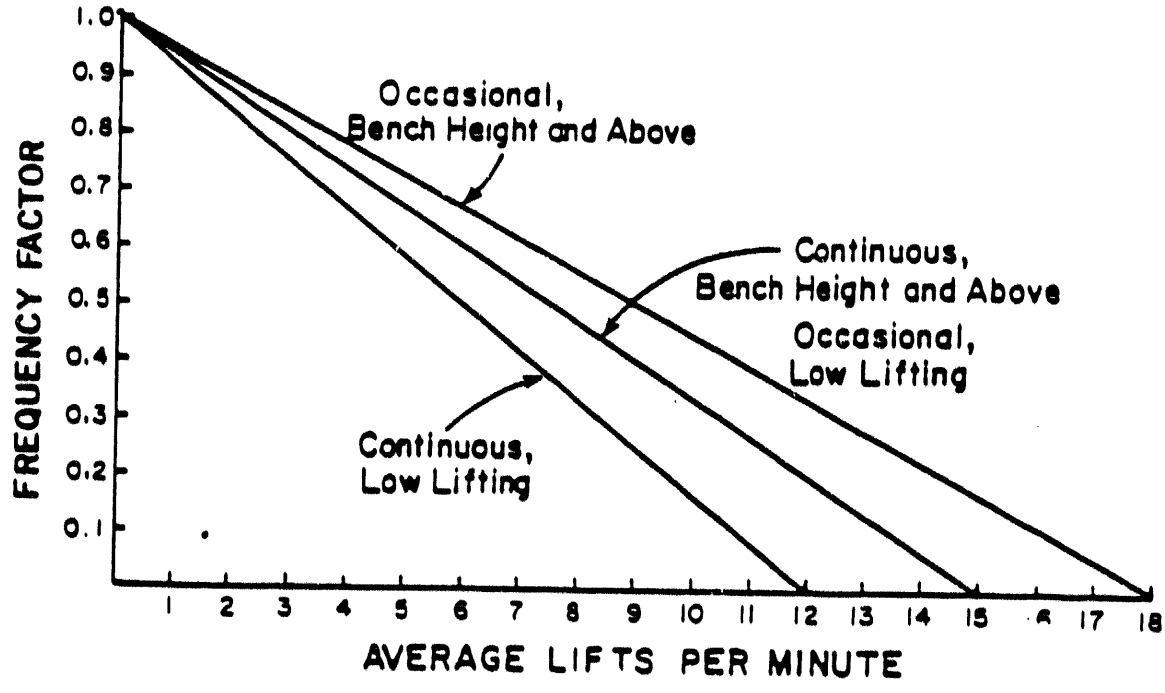

Figure 8.7: Frequency of Lift Factor Nomogram.

analysis sheet. The remarks section may be useful in describing which factor is most restrictive or limiting for each element.

EXAMPLES

Five examples will now be discussed to illustrate the analysis and interpretation of this methodology.

Example 1: Infrequent Lifting

Figure 8.8 illustrates a common misconception (or oversight) in terms of what types of jobs may be physically stressful. A punch press operator, for example, routinely handles small parts, feeding them in and out of a press. A cursory view of this task may overlook the fact that once per shift, the operator is required to load a reel of supply stock (illustrated shoulder height) from the floor onto the machine. The reel weighs 20 kg. This activity is documented in Figure 8.9. Assuming the operator lifts the reel in the plane shown (rather than on the side of the machine) the appropriate horizontal dimension is (75/2 + 15) = 53 cm or ($\frac{30}{2}$ + 6) = 21 in. At the destination V = 160 cm (63 in). Since the activity occurs only once per shift, F = 0 (no frequency adjustment required).

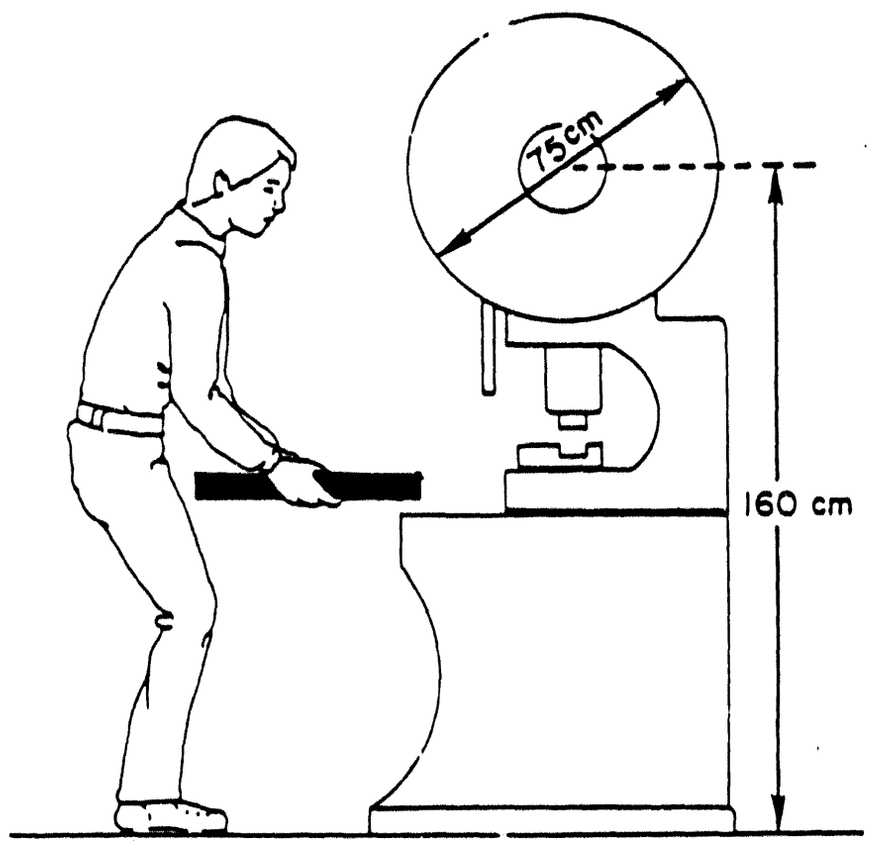

Figure 8.8: Example 1, Punch Press Operator.

PHYSICAL STRESS JOB ANALYSIS SHEET

DEPARTMENT FABRICATION DATE 2/18/80

JOB TITLE PUNCH PRESS ANALYST'S NAME EJB

TASK DESCRIPTION	OBJECT WEIGHT Ave	OBJECT WEIGHT Max	HAND LOCATION Origin H cm	HAND LOCATION Origin V cm	HAND LOCATION Destination H cm	HAND LOCATION Destination V cm	TASK FREQ	AL	MPL	REMARKS
LOAD STOCK	20	20	53	38	53	160	0	7.2	21.6	New Work Practice Needed

Figure 8.9: Job Analysis for Example 1.

Interpreting this activity in terms of the critical variables:

H factor = 15/H = 15/53 = .28

D factor = .7 + 7.5/(160-38) = .76

V factor = 1 - .004 (75-38) = .85

F factor = 1 - 0/15 = 1.0

Therefore

AL = 40(.28)(.76)(.85)(1.0) = 7.2 kg

MPL = 3(7.2) = 21.6 kg

In this case, lifting the 20 kg reel in this way would be stressful for most people and at least strong administrative controls would be required if not engineering controls.

Notice that the H factor is most critical in this case (H factor = .28). If possible, the operator should load the machine from the side (i.e., grasping the reel by its perimeter). This would allow the reel to be brought closer to the body (i.e., H = 20 cm for example). With this preferred work practice,

$$AL = 40(.75)(.76)(.85)(1.0) = 19.4$$

$$MPL = 3(19.4) = 58.2$$

For all practical purposes the activity is now within the capabilities of most people. Alternative engineering controls might include elevating the delivery of reels (above the floor) thus improving both the V and D factors.

Examples 2 and 3: H Not Constant

Evaluation of jobs where the H value is not constant throughout the lift should be approached with caution by the analyst. The most common error is to exaggerate H, making a job seem more difficult than it actually is.

For example, a compact load is lifted from the floor to a point 125 cm high as illustrated in Figure 8.10. Due to workplace constraints the object must be placed on a moving conveyor at a distance H=80 cm but the lift is unconstrained up to waist height (about 100 cm). In most cases, the load can be lifted close to the body up to this point and then through transfer of momentum be placed on the conveyor with little difficulty. Using an H value of 80 cm greatly overestimates the strength requirements of this task. As a general rule of thumb, the analyst should use the H value at the origin (in this case close to the body) to determine the weight limit and not the H value for the end point of the lift. However, a fragile load that must be carefully handled throughout the lift may well require the strength capabilities of lifting the load from the floor to the end point at an H value equal to that of the end point!

The estimation of horizontal location as W/2 + 15 cm for body clearance is not appropriate with horizontal obstructions such as illustrated in Figure 8.11. In this case, the appropriate horizontal dimension is 60 cm at the origin. Presumably the load is not fragile, nor need it be retrieved from the destination. If it must be retrieved the horizontal location at the destination will become the origin for a subsequent lift!

Example 4: Occasional High Frequency Lifting of Constant Weights

Suppose that for a period of one hour, a person unloads palletized cartons each weighing 5 kg stacked 5 high onto a conveyor as illustrated in Figure 8.12. In this case the vertical origin location

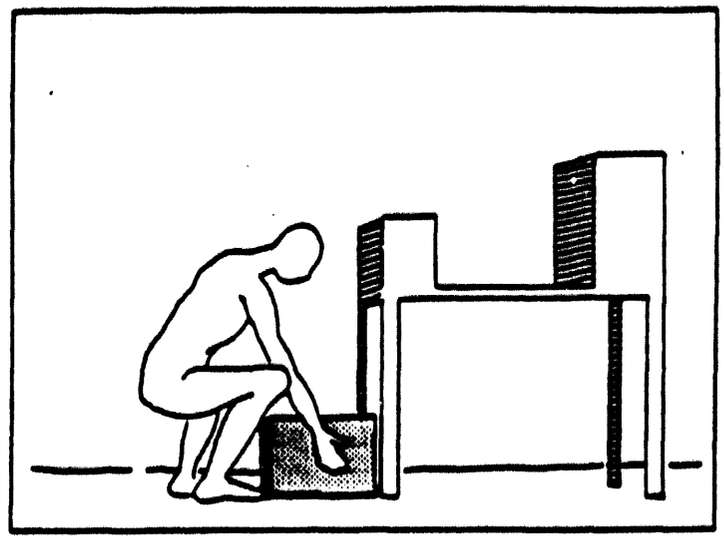

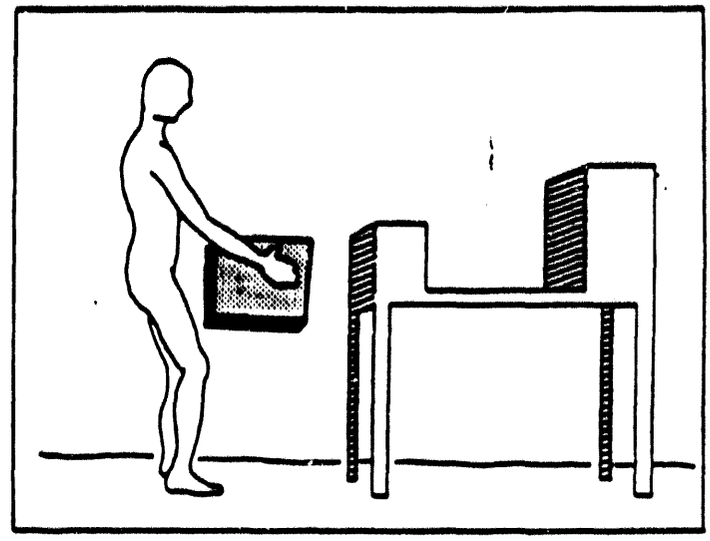

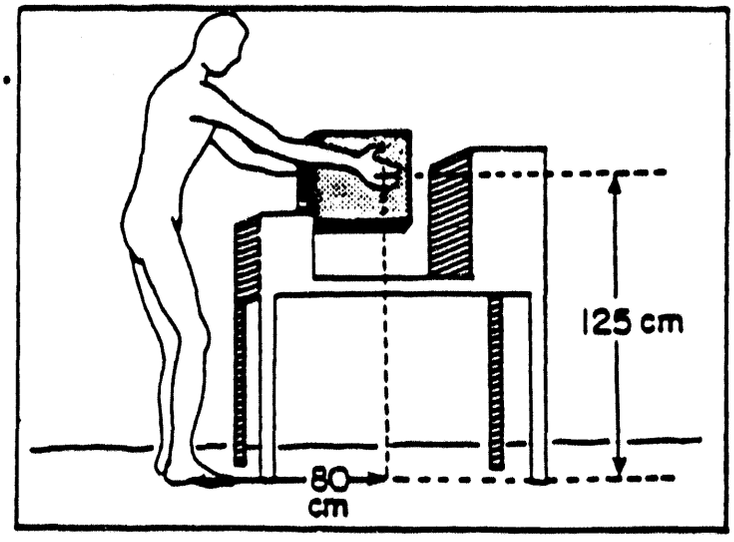

Figure 8.10: Example 2, Transfer of Momentum.

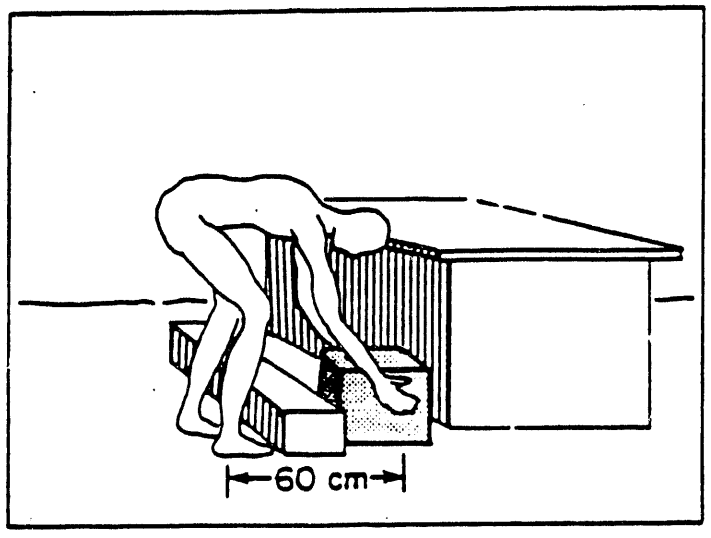

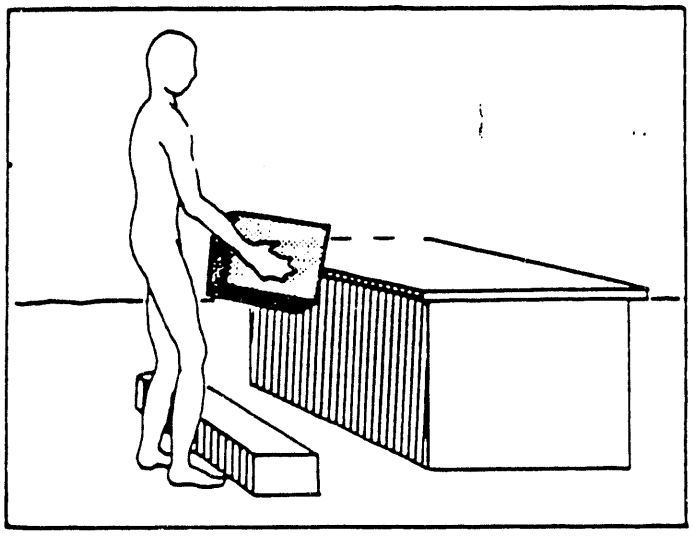

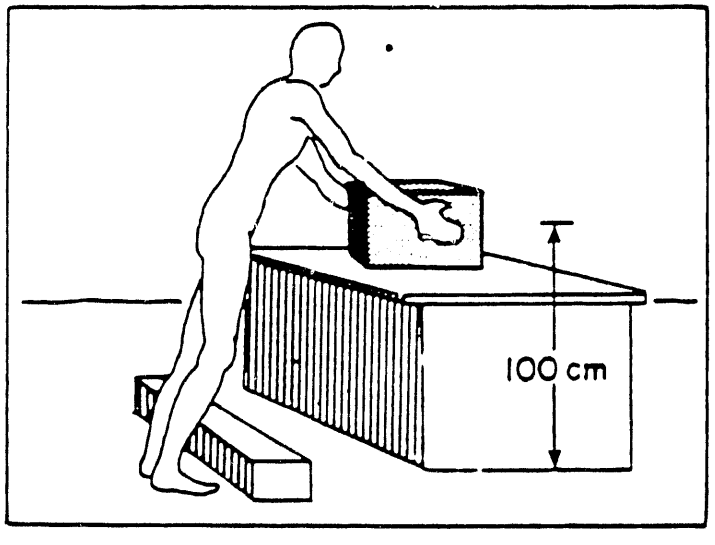

Figure 8.11: Example 3, Horizontal Obstruction.

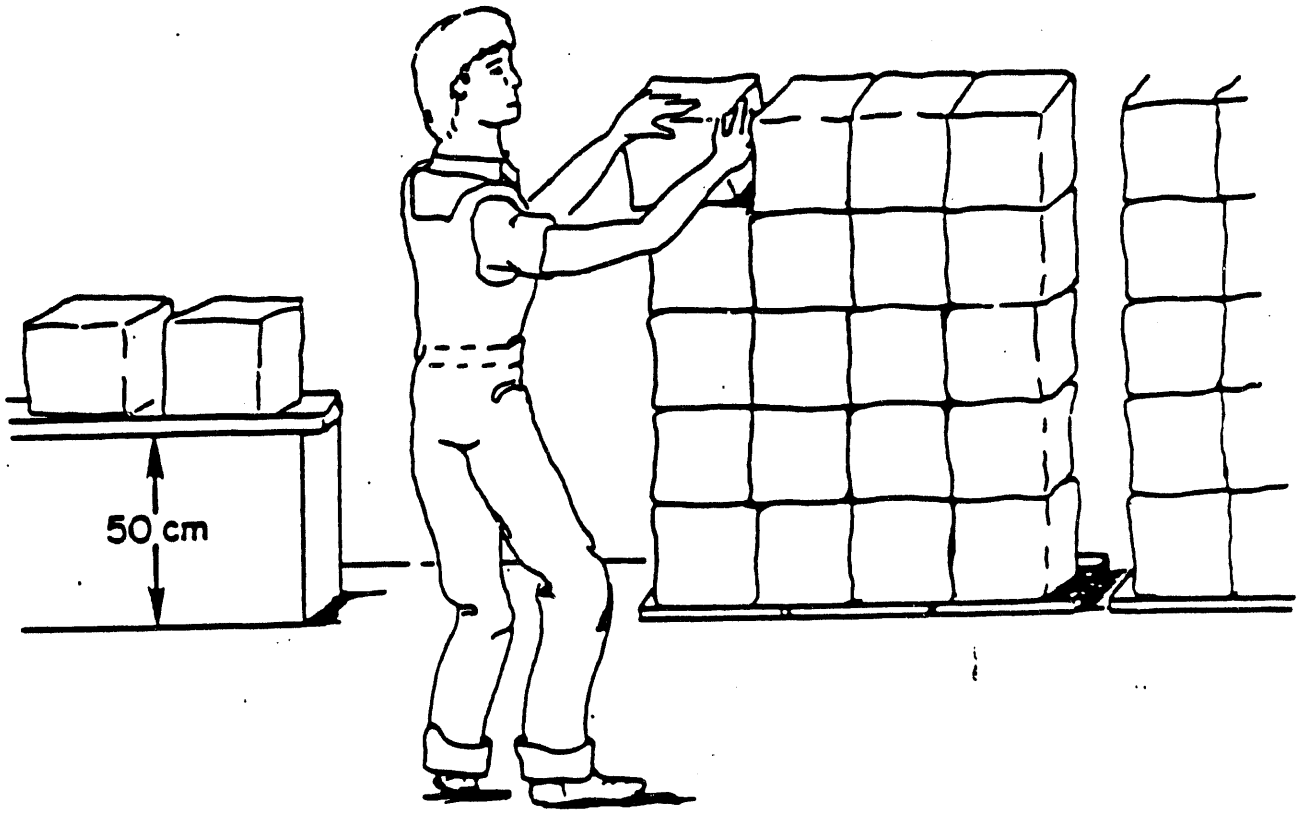

Figure 8.12: Example 4, Depalletizing Operation.

(V) and vertical travel (D) vary from one lift to the next. Also note that this task requires both lifting and lowering (for those high cartons) as well as possibly some twisting and carrying. These later aspects are outside this Guide and their effects should be minimized by a slowed pace for lifting and delivering pallets as close to the conveyor as possible.

Figure 8.13 presents an analysis which approximates the stresses of this activity assuming the carton dimensions are 40 cm x 40 cm x 40 cm, unloaded 12 per minute, and the person is free to climb over the pallet to get close to each carton. Basically the job is divided into 5 tasks representing the 5 tiers of the loaded pallet. The base frequency (12/min) is divided between each tier (2.4 lifts/min/tier). The horizontal location is estimated as H = (15 + 40/2) = 35 cm. The vertical locations at the origin represent the position of the hands under the cartons (ignoring the pallet height for purposes of this example).

Two separate analyses are warranted in this case. Each task should be analyzed separately and then collectively. The most stressful task (or tier) is task 5. For this task the V factor = (1 - .004(160-75)) = .66. The V factors for each of the other tasks will

PHYSICAL STRESS JOB ANALYSIS SHEET

DEPARTMENT WAREHOUSE DATE 8/8/80

JOB TITLE DEPALLETIZING ANALYST'S NAME GDH

TASK DESCRIPTION	OBJECT WEIGHT Ave	OBJECT WEIGHT Max	HAND LOCATION Origin H cm	Origin V cm	Destination H cm	Destination V cm	TASK FREQ	AL	MPL	REMARKS
UNLOAD PALLETS							12/min			
TIER 1	5	5	35	0	35	50	2.4			
TIER 2	5	5	35	40	35	50	2.4			
TIER 3	5	5	35	80	35	50	2.4			
TIER 4	5	5	35	120	35	50	2.4			
TIER 5	5	5	35	160	35	50	2.4	8	24	
TOTAL	5		35	80			12	4.7	14	

Figure 8.13: Example 4, Analysis Sheet.

be larger since this vertical origin is most distant from 75 cm. Note that with more complicated tasks such a simplification will not necessarily be possible. It is only possible with this job since all other variables remain constant.

For this most stressful task, then

$$AL = 40\ (15/35)(.66)(.7+7.5/110)(1-2.4/18) = 8 \text{ kg}$$

$$MPL = 3\ (8) = 24 \text{ kg}$$

It is concluded that individually the elements of the job are quite reasonable (5 kg is below the AL).

Now consider the tasks collectively. The following approximation is not exact but should provide a reasonable composite estimate. Derive a weighted average for each variable in the job analysis according to frequency. In this case frequency is constant across tasks and vertical origin and travel distance are the only factors which vary.

The average vertical location is

$$V = \frac{0 + 40 + 80 + 120 + 160}{5} = 80 \text{ cm}$$

The average vertical travel is

$$D = \frac{50 + 10 + 30 + 70 + 110}{5} = 54 \text{ cm}$$

For the total job then

$$AL = 40\ (15/35)(1-.004(5))(.7+7.5/54)(1-12/18)$$

$$= 40\ (.43)(.98)(.84)(.33)$$

$$= 4.7 \text{ kg}$$

$$MPL = 14 \text{ kg}$$

Since the carton weight (5 kg) is nominally above the AL, administrative controls may be required. The analysis suggests that the problem with this job is not so much strength (at issue in the individual task analysis) but endurance. Since a number of simplifying assumptions were made in this analysis a more detailed metabolic analysis of such a job may be warranted before implementing administrative controls. Such an analysis is described in detail by Garg, et al., (1978).

Example 5: Continuous High Frequency Lifting, Variable Tasks

Lifting tasks of this type are typical in warehousing, shipping and receiving activities where there are many different sized loads of varying weights that are lifted at varying frequencies. As a simple example, consider a job with the set of 3 tasks described in Figure 8.14.

For highly variable jobs (such as this one) this Guide is most limited. Following the procedure of the preceding example, each task should first be examined individually. The recommended AL and MPL for each task is as follows:

TASK 1: $AL = 40\ (15/40)(1-.004(75))(.7+7.5/75)(1-1/12)$

$$= 40\ (.38)(.70)(.80)(.92) = 7.8$$

$$MPL = 23.4$$

PHYSICAL STRESS JOB ANALYSIS SHEET

DEPARTMENT RECEIVING DATE 5/1/80

JOB TITLE LOADER ANALYST'S NAME CKA

TASK DESCRIPTION	OBJECT WEIGHT Ave	OBJECT WEIGHT Max	HAND LOCATION Origin H cm	Origin V cm	Destination H cm	Destination V cm	TASK FREQ	AL	MPL	REMARKS
PRODUCT A	10	40	40	0	50	75	1	7.8	23.4	Reduce product variability
PRODUCT B	15	30	30	0	30	15	2	11.6	34.8	
PRODUCT C	5	10	15	75	20	100	5	26.8	80.4	
TOTAL	8.1		22	47			8	7.7	23.1	

Figure 8.14: Example 5, Highly Variable Job.

TASK 2: AL = 40 (15/30)(1-.004(75))(.7+7.5/25)(1-2/12)

= 40 (.50) (.70)(1.0)(.83) = 11.6 kg

MPL = 34.8

TASK 3: AL = 40 (15/15)(1-.004(0))(.7+7.5/25)(1-5/15)

= 40 (1.0)(1.0)(1.0)(.67) = 26.8 kg

MPL = 80.4 kg

Two technical aspects of the above calculations are noteworthy:

a. Travel distances less than 25 cm should be considered as 25 cm. In task 2, this cutoff was used. (Factors must all be less than or equal to 1.0).

b. Since this job is performed continuously, F_{max} factors (from Table 8.2) of 12 and 15 were used for lifts from less than and greater than 75 cm.

Based on this elemental analysis it can be concluded that Tasks 1 and 2 are the most stressful. In fact, the maximum weights of 40 kg (Task 1) are above the MPL = 23.4 and engineering controls (such as mechanical aids or two-person lifting) are warranted. Note that the average weights in Task 1 (10 kg) are reasonable with administrative controls. In both cases, the horizontal location produces the greatest discount in ability. Task 3 appears to be nominal in terms of physical stress.

As with Example 4, analysis of the combined elements of the job can only be approximated by computing weighted averages according to frequency. In this case, the composite

$$H = \frac{1(40) + 2(30) + 5(15)}{8} = 22 \text{ cm}$$

The coefficients 1, 2, and 5 correspond to each elemental frequency and 8 is the total number of lifts per minute.

Similarly, the weighted average

$$V = \frac{1(0) + 2(0) + 5(75)}{8} = 47$$

$$D = \frac{1(75) + 2(15) + 5(25)}{8} = 29$$

$$F = 1 + 2 + 5 = 8$$

Thus, for the combined tasks:

$$AL = 40\ (15/22)(1-.004(75-47))(.7+7.5/29)(1-8/12)$$

$$= 40\ (.68)(.89)(.96)(.33) = 7.7 \text{ kg}$$

$$MPL = 23.1 \text{ kg}$$

Since the average weight lifted is 8.1 kg, administrative controls are required.

It is important to note that this "averaging" of the task descriptors in this case tends to dampen out the large differences between the tasks. This is true in general (but not always). This error and the errors introduced by ignoring other carrying, holding, pushing, and pulling tasks can only be resolved with more detailed biomechanical, metabolic, and psychophysical evaluations.

ADMINISTRATIVE CONTROLS

Given the preceding detailed analysis of the physical stresses, a lifting job (or tasks within a job) can be classified into one of 3 zones:

1. Acceptable (below the AL),

2. Unacceptable for most individuals (above the MPL), or

3. Unacceptable for some individuals (between the AL and MPL).

This section deals with selecting and training of workers for jobs of the latter type (3). A more detailed discussion is presented in Chapter 6. Alternative engineering controls are then summarized for conditions 2 and 3. A more detailed discussion appears in Chapter 7.

Selection

In order to safely match a worker to the physical demands of a given task, several selection procedures can and have been used. For the many manufacturing, distribution, and service industries which have no medical staff, self-selection has been the principal method. Other methods commonly used are:

1. Questionnaires on health and medical history

2. Tests of visual, auditory and pulmonary function, blood pressure, mobility and a chest X-ray

3. Clinical examination.

The problem with these is that they are unreliable predictors of medical risk of injury. Also, the worker is usually not followed medically during the first few weeks of training when many postural stress related problems could be prevented.

In view of these problems, routine lumbar spinal radiography has often been prescribed by occupational medical advisors as a prerequisite for employment in heavy manual work. Using X-rays for this purpose, however, is very controversial because:

1. There have not been any statistically significant differences shown in the incidence of radiological abnormalities between workers with known history of back pain and those without.

2. There is a problem of X-ray interpretation. No reliable data exists on the predictive rating for observed abnormalities. It is also impossible to quote a value for the increased probability of back trouble for different abnormalities.

3. X-rays present a radiation hazard, particularly for females who cannot be given adequate gonadal protection.

In summary, caution must be exercised in using the lumbar spinal radiograph as a selection tool. If so, it should be performed by an experienced physician after a thorough interview and examination, and with full knowledge of the MMH job concerned.

Physical Assessment of Workers

What is needed is an objective means for assessing the physical capabilities of a worker who is being considered for a certain job. In providing such an assessment certain medical, social and economic criteria must be met, these are:

1. Is it safe to administer?

2. Does it give reliable, quantitative values?

3. Is it related to specific job requirements?

4. Is it practical?

5. Does it predict the risk of future injury or illness?

As we have seen, the low back X-ray fails to some degree in each of these criteria, particularly in those relating to safety and reliability. As an alternative, worker strength testing and aerobic capacity testing have been proposed as means to meet these objectives. If carefully administered they appear to satisfactorily meet each of the above criteria as discussed in Chapter 6.

Training

The importance of training in manual materials handling in reducing hazard is generally accepted. What is lacking, however, is a clear definition of what the training should be and how it should be taught. Most controlled studies of training have shown it to be ineffective in reducing accidents and injuries related to lifting. Despite this, however, some form of training in manual materials handling jobs is likely to continue. What follows is a suggestion of what a training program should include.

1. <u>What should be taught</u>.

   The aims of training for safety in lifting should be:

   a. To make the trainee aware of the dangers of careless and unskilled lifting.

   b. To show them how to avoid unnecessary stress.

c. To teach the worker individually to become aware of what he/she can handle comfortably without undue effort.

In order for the training to be effective, the instructors must be well versed in the sciences basic to manual materials handling and in Safety Engineering. The content of the course must also be suited to the educational background of the trainees.

The course should cover the following aspects:

a. The risks to health of unskilled lifting: Case histories from the organization concerned provide the best illustration.

b. The basic biomechanics of lifting: The body as represented by a system of levers.

c. The effects of lifting on the body: The basic anatomy of the spine and the muscles and joints of the trunk; the contribution of intra-thoracic pressure while lifting.

d. Individual awareness of the body's strengths and weaknesses: How to estimate one's comfortable lifting capacity.

e. How to avoid the unexpected: Recognition of the physical factors which might contribute to an accident.

f. Handling skill: Safe lifting postures; minimizing the load - moment effects; timing for smooth and easy lifting.

g. Handling aids: Platforms, stages or steps, trestles, handles, wheels, shoulder pads.

h. Warnings: What to be aware of when lifting.

2. How it Should be Taught.

It is not enough to teach safe lifting practices by slides or films. The trainee should be practically involved from the start. Therefore, classes must be small. Training should not be restricted to a classroom. Lifting technique should be demonstrated and practiced at the work site. Supervisors, as well as trainees, should be involved in the training program. The following are the steps to an effective training program:

a. Begin with a poster campaign drawing attention to the need to do something about lifting accidents and back injuries, changing them every few days.

b. Organize a training session for managers and supervisors.

c. Present the training course to small groups of employees.

d. Have the plant doctor and the team of instructors tour the plant, discussing any points put to them by the workers.

e. Continue to make plant tours at regular intervals.

In summary, there is a vital need for training to be both in the classroom and on the site, to involve all levels of workers including executives, and to be monitored routinely throughout the factory in order for the program to be effective.

ERGONOMIC/ENGINEERING CONTROLS

More important than proper selection and training in the long term prevention of accidents and injuries related to lifting, is providing a safe ergonomic environment in which to work. This includes factors of the mechanical environment (such as container design, human/container coupling design, worker/floor surface coupling), the visual environment and the thermal environment.

Mechanical Environment

1. Container Design. From the biomechanical considerations discussed in Chapter 3, containers should be as small as possible. A compact load minimizes the compressive forces applied to the L_5/S_1 disc because the load center of gravity can be brought close to the spinal column - oftentimes between the legs, which reduces disc pressure even more. Another important factor in container design is the load center of gravity. Baffles, dividers or packing should be used to keep the center of gravity in a constant position because any shifting of the load could contribute to human error in manual handling.

   Anthropometry plays an important part in recommending the maximum dimension of a container. If the forward edge is to be reached, the length should not exceed 70 cm (males) or 65 cm (females). To prevent interference with forward vision, the maximum height of the container above handle position should be 83 cm (males) and 80 cm (females). Also handles should be placed so that the whole container is above hip height when the elbows are extended.

2. Human/Container Coupling Design. Handles on containers should be designed with the worker's hand in mind. They have a large effect on both the maximum force a worker can exert on a container and on the energy expenditure in manual materials handling tasks. The major problems with most handles are insufficient hand clearance, sharp edges which can cut into the hand and too small of a handle diameter.

The postures of the hand with respect to grasped objects can be classified as follows:

a. Hook grip. One in which the fingers are flexed around the object and the thumb is not used for gripping.

b. Power grip. One in which the object is clamped between the partly flexed fingers and palm with the thumb opposing the grip and lying along the plane of the palm.

c. Precision grip. One in which the object is pinched between the flexor aspects of the fingers and opposing thumb.

Most handles force the worker to use the hook grip (the least effective) or the power grip. The power grip gives a good gripping force and allows a large surface of the hand to be used but often is inefficient if accurate control is needed. The weight of the object often prevents the precision grip from being used.

There is little agreement in the literature as to what the optimum handle diameter is, but from 25 mm (1 inch) to 38 mm (1.5 in.) is the range into which most recommendations fall. The elimination of sharp edges, seams, rubbing, and corners appears to be of more importance than actual handle diameter. The shape of the handle is better cylihdrical than molded to the contours of the hand.

Handle width should be at least 11.5 cm (4.5 in.) with 50 mm (2 inches) clearance all around the handle to accommodate a 95th percentile hand. If gloves are used, at least 25 mm (1 inch) should be added to these dimensions.

3. Worker/Floor Surface Coupling. Poor worker/floor coupling will most often result in accidents such as slips, trips, or missteps. The major mediating variable in these types of accidents is the coefficient of friction between the shoe sole and the working surface. This can be affected by:

a. work surface materials

b. surface coating

c. floor condition

d. floor angle

e. shoe sole/heel composition and contact area

f. shoe style

The general recommendation is to adjust shoes and working surfaces to give a coefficient of static friction of at least .4 and preferrably .5.

Unnoticed changes in surface friction can also cause accidents. These can be reduced by:

a. ensuring that different surface materials or coatings have transition zones between them,

b. clearly marking any surface friction change,

c. using good housekeeping procedures to reduce transient changes in surface friction such as spills, worn spots, loose or irregular floors.

Because of the forces transmitted from the container to the body when lifting, good work/floor coupling is essential in controlling accidents and injuries resulting from foot slippage.

The Visual Environment

While manual materials handling operations rarely demand the fine visual discrimination of delicate assembly work, they do require control of the visual environment for optimum performance and safety. The task of lifting involves vision of the container, the workplace around the container and the surface on which the operator stands. An illuminance of 150 lux (14 foot-candles) in each of these areas is a recommended minimum.

Types of lifting can have a large effect on visual performance, particularly in the areas of depth perception and surface texture perception. Differences in contrast or differential illumination can be used to make stairs or changes in walking surfaces easily discernible. Low, angled illumination is recommended for enhancing surface texture to warn operators of changes in shoe/surface friction. Depth perception errors can be controlled by changing reflectance of the container and task to provide additional contrast. Color contrast can be used on edges of steps, loading docks and ramps when the consequences of misperception are severe.

Labeling can be used to indicate handhold positions, cautions against single person lifting if the load is heavy, or a note of caution if its center of gravity is not near the center or if it is likely to shift.

The Thermal Environment

Deviations from the comfort zone (18°C (64.5°F) to 21°C (70°F) have been shown to influence injuries in many industries. It is thus particularly important to ensure that thermal stress does not contribute to manual materials handling safety problems.

Cold environments are not usually a problem in manual materials handling because the strenuous nature of the work provides sufficient heat production, and the thermal clothing may provide some personal injury protection. The cold, however, does reduce dexterity which could lead to human error in lifting.

If a heat stress problem is suspected, it should be assessed by the Wet Bulb Globe Temperature (WBGT) index. Recommendations for this index can be found in the ACGIH (1980). Engineering control measures such as radiant heat shielding, forced air movement, clothing design and work-rest schedules can be used to prevent body temperatures from increasing over the 38°C (100.4°F) recommendation.

Materials Handling System Alternatives

Jobs which exceed the MPL should be performed with the aid of some mechanical device or redesigned so that they can be performed safely. Some examples of simple lifting aids found at the workplace are:

a. Hooks: The worker should be trained in the use of handling packing hooks so that they will not glance off hard objects.

b. Bars: The major hazard of a crow bar is that it may slip. The edge should have good "bite".

c. Rollers: These are effective in moving heavy and bulky objects.

d. Jacks: They should be marked to indicate the safe load which can be raised.

e. Platforms: These provide the maintenance of a convenient height for lifting and handling.

f. Trestles: These can be used to maneuver long loads on the point of balance, or for readjusting the grip or carrying posture.

Other types of mechanical aids are:

a. Conveyors are used primarily when loads are uniform, movement is from one point to another, and materials move constantly.

b. Cranes and Hoists are most commonly used when loads vary in size and weight, moves are intermittent, and cross traffic will interfere with conveyors.

c. Industrial trucks are most often used when materials are moved intermittently, over varying routes, when cross traffic would prohibit conveyors, and loads are uniform or mixed in size and weight.

Potential Safety and Ergonomic Problems

Reducing the physical hazards or manual lifting to the musculo-skeletal system can often result in other types of safety problems. Some of these are:

a. Conveyors: Aside from mechanical entrapments, the major problem with conveyors is that the work is externally paded. This can cause time-stress induced errors. Conveyor designs which take into account the cycle-to-cycle variability of the operator can reduce such stress. Buffer stocks between stations achieve the same effect.

b. Cranes and Hoists: Because of the dangers involved when a load is suspended, cranes are among the most hazardous of material handling equipment. The crane cab and all controls should be designed for good visibility and safe operation. The loading capacity of the crane should be clearly marked. Standard signals should be used between the crane operator and the signalman on the ground.

c. Hand Trucks: Safety hazards include falling of the load, collision between the truck and other objects, and the operator getting pinned between the truck and another object. These can be reduced by such design features as: covering all exposed handles with knuckle guards, guarding or recessing all wheels, brakes that apply automatically when the handle is either fully raised or fully lowered, or released.

CONCLUSION

It has been traditional to bemoan the existence of widely divergent recommendations for maximum weights which can be safely lifted. These divergent recommendations have actually been due to the differences in what is accepted as a reasonable criterion by different scientific disciplines. This Guide has attempted to integrate the conclusions of four distinctive disciplines within the broad field of Ergonomics into one set of recommendations. Obviously, the recommendations do not satisfy any of the criteria perfectly and considerable qualification of the specific aspects of lifting were required in order to arrive at any consensus.

The convergence between the methodologies, however, overshadows the differences. The fact that these technologies agree on the major factors which limit lifting ability and even point to similar absolute magnitudes is strong evidence that the guidance is sound. This guidance will only be effective, though, if it is carefully studied and applied within your workplace.

MEDICAL AND FIRST AID - SUBPART C&K

PURPOSE

The purpose of this lesson is to acquaint the participant with the requirements of Subpart C, General Safety and Health Provisions, 1910.20, Access to medical records and Subpart K, Medical and First Aid.

OBJECTIVES

1. State and explain three requirements of 29 CFR 1910.20.
2. Given a situation involving skin and eye contact with corrosive materials, apply the correct citation from Subpart K.

REFERENCES

1. 29 CFR 1910 Occupational Safety and Health Standards, for General Industry

DURATION

One hour

INSTRUCTOR MATERIALS

Course manual with instructors notes

Battelle
Pacific Northwest Laboratory is operated for the U.S. Department of Energy by Battelle Memorial Institute.

Medical and First Aid Subparts C and K

Objectives

1. State and explain three requirements of 29 CFR 1910.20.
2. Given a situation involving skin and eye contact with corrosive materials, apply the correct citation from Subpart K.

Subpart K—Medical and First Aid

- 1910.151 Medical services and first aid
  - (a) Medical personnel shall be readily available for advice and consultation on workplace health
  - (b) If no clinic is in near proximity to the workplace, a person or persons shall be first aid trained; first aid supplies shall be readily available

1910.151 (c)

- "Where the eyes or body of any person may be exposed to injurious corrosive materials, suitable facilities for quick drenching or flushing of the eyes and body shall be provided within the work area for immediate emergency use".

Subpart C—General Safety and Health Provisions

- 1910.20 Access to employee exposure and medical records
  - Permits direct access by employees or their designated representatives and by OSHA to employer-maintained exposure and medical records.

Purpose

- 1910.20 (a)
  - "Access by employees, their OSHA representatives are necessary to yield both direct and indirect improvements in the detection, treatment, and prevention of occupational disease."

Employer Responsibilities

- More of .20(a)
  - Assuring compliance with this section, but compliance activities can be carried out by a physician or health care personnel on behalf of the employer
  - Confidentiality of employee medical information shall be maintained

Scope

- 1910.20 (b) applies to:
  - all industry employers who have access to employee exposure or medical records regarding exposure to toxic substances or harmful physical agents
  - all employee exposure, medical records and analysis thereof, whether or not the records are mandated by specific standards

Definitions

- 1910.20(c) includes:
  - access means the right to examine and copy
  - designated representative means any individual or organization to whom an employee gives written authorization to exercise access rights
  - exposure records include air monitoring, biological monitoring, MSDS, chemical inventory

Medical Records

- Does not include:
  - medical and employment questionnaires and histories
  - results of exams (pre-placement, periodic, episodic)
  - medical opinions, diagnoses, recommendations

Specific Written Consent

- Must include:
  - name and signature or employee authorization release
  - date
  - name of individual or organization who is releasing the information

Preservation of Records

- Medical records must be maintained for the duration of employment plus 30 years, EXCEPT:
  - health insurance claims maintained separately
  - first aid records for one time treatment
  - employees who have worked for < one year

Record Retention

- Exposure records shall be preserved and maintained for at least 30 years, EXCEPT:
  - background data, i.e., lab reports, worksheets as long as sampling method, protocol, and analytical method are retained
  - MSDS, as long as some record of chemicals used exists for 30 years
  - biological monitoring results required by specific standards shall be preserved as per that standard

Access to Records

- Employer shall assure that access is provided in a reasonable, time, place and manner
  - if longer than 15 days, employer must inform employee of the earliest available time and the reason for the delay
  - without cost to the employee
  - copying facilities are also available without cost

Analyses Using Exposure or Medical Records

- An employee and OSHA can have access to analyses that were developed using information from exposure or medical records about the employee's workplace
- Personal identities, such as name, social security or payroll numbers, age, sex, race must be removed from data analyses prior to access

Trade Secrets

- If an employer decides not to disclose the specific chemical identity, the following steps must be taken:
  - provide a written denial within 30 days of the request
  - provide evidence that it is a trade secret and give specific reasons for the denial of information
  - provide and explain why alternative information is adequate

Employee Information

- At the time of initial employment and at least annually thereafter, employees must be told of the existence, location and availability of their medical and exposure records
- Employers must inform employees of their rights and make copies of this standard available

Transfer of Records

- Whenever an employee ceases to do business, all records shall be transferred to the successor employer
- If there is no successor employer, the employer must:
  - notify the employees at least 3 months prior of their rights of access
  - transfer the records to NIOSH

Non-Mandatory Appendices

- A—Sample Authorization Letter of the Release of Employee Medical Record Information to a Designated Representative
- B—Availability of NIOSH Registry of Toxic Effects of Chemical Substances (RTECS)

1926 SAFETY AND HEALTH REGULATIONS FOR CONSTRUCTION

PURPOSE

The purpose of this lesson is to acquaint the participant with the basic concepts of construction safety, and the application of 29 CFR 1926.

OBJECTIVES

1. Describe how employer responsibility for worker safety and health is affected by subcontractor agreements.
2. Given a construction site scenario involving safety and health issues, identify applicable standards from 29 CFR 1926. Determine if the situation is in compliance, and describe appropriate corrective measures.
3. Identify 4 types and uses of heavy equipment including cranes, hoists and earth moving machinery.
4. Describe conditions for safe welding and cutting on construction sites.
5. Describe 3 excavation conditions and set safety parameters as outlined in 29 CFR 1926.

REFERENCES

1. 29 CFR 1926 Safety and Health Regulations for Construction Department of Labor
2. 29 CFR 1910 General Safety and Health Standards, United States Department of Labor
3. Electrical Safety-Related Work Practices; Final Rule. 54 FR 31984
4. Accident Prevention Manual for Industrial Operations: 9th ed. Vol Engineering and Technology, National Safety Council
5. Accident Prevention Manual for Industrial Operations: 9th ed. Vol I Administration and Programs, National Safety Council
6. Supervisors' Safety Manual, 7th ed. National Safety Council
7. American National Standards Institute (ANSI), 1430 Broadway, New York, NY 10018
8. National Fire Protection Association (NFPA), Batterymarch Park, Quincy, MA 02269

DURATION

Two hours

INSTRUCTOR MATERIALS

Course manual with instructors notes.
Selected videos and slide presentations
Overhead projector/viewer assembly
VCR/TV

Battelle
Pacific Northwest Laboratory is operated for the U.S. Department of Energy by Battelle Memorial Institute.

1926 Safety and Health Regulations for Construction

Objectives

1. Describe how employer responsibility for worker safety and health is affected by subcontractor agreements.
2. Given a construction site scenario involving safety and health issues, identify applicable standards from 29 CFR 1926. Determine if the situation is in compliance, and describe appropriate corrective measures.

Objectives

3. Identify 4 types and uses of heavy equipment including cranes, hoists and earth moving machinery
4. Describe conditions for safe welding and cutting on construction sites
5. Describe 3 excavation conditions and set safety parameters as outlined in 29 CFR 1926

Rules of Construction

- 1926.16
- (b) "...the prime contractor assumes all obligations prescribed as employer obligations...whether or not he subcontracts any part of the work."
- (c) " with respect to subcontracted work, the prime contractor and any subcontractor or subcontractors shall be deemed to have joint responsibility"

Subpart C—General Safety and Health Provisions

- Accident prevention responsibilities
- Safety training and education
- Housekeeping

Subpart D—Occupational Health and Environmental Controls

- 1926.50- Medical services and first-aid
  - Medical personnel available for advice and consultation
  - First-aid available on remote sites
  - Ambulance, doctor and hospital phone numbers shall be conspicuously posted

Sanitation—1926.51

- Potable water shall be provided
  - Clearly marked, sealed containers with tap
- No cross-connections allowed
- Toilets-number required is specified
- Washing facilities required where contaminants are used

1926.52—Noise Exposure

- Feasible, engineering or administrative controls shall be utilized to protect employees against sound levels in excess of Table D-2
- If controls fail to reduce sound levels, ear protection devices shall be used
- When sound levels exceed Table D-2, a Hearing Conservation Program is required

1926.55—Gases, Vapors, Fumes, Dusts and Mists

- Exposure above the Threshold Limit Values shall be avoided
- Administrative or engineering controls shall be implemented whenever feasible to comply with TLV's
- Personal protective equipment (PPE) as a last resort
- PPE shall be approved for each use

1926.56—Illumination

- Construction areas, ramps, runways, corridors, offices, shops, and storage areas shall meet the minimum illumination intensities of Table D-3

10

1926.57—Ventilation

- PELs shall not be exceeded
- Design shall not draw through work area
- Volume and velocity shall be sufficient
- Duration of ventilation
  - Continually during work process
  - For a time after process

11

1926.59—Hazard Communication

- Chemical inventory
- Labeling
- Material Safety Data Sheets (MSDS)
- Training
- Written program

12

Subpart E—Personal Protective and Life Saving Equipment

- 1926.100
- Head Protection
  - Hard hats required where danger of head injuries exist
  - 1926.101
- Hearing Protection
  - Hearing protection required where noise controls aren't feasible
  - Fitted by a competent person

13

1926.102—Eye and Face Protection

- Shall be provided where injury potential exists
- Shall meet ANSI Z87.1 standards
- Welders and laser workers require lenses of proper optical density

14

1926.103—Respiratory Protection

- Engineering and administrative controls required first
- Respirators shall be specifically approved by Mine Safety and Health Administration (MSHA) or National Institute for Occupational Safety and Health (NIOSH)
- Training required in respirator uses and limitations
- Regular inspection and good maintenance required

15

1926.104—Safety Belts, Lifelines and Lanyards

- Used only for personal protection
- Removed from service after any fall
- Minimum specifications listed
- Safety nets required when workers are more than 25 feet above surface, and lifelines, belts or scaffolds are impractical

16

Subpart F—Fire Protection and Equipment

- A fire fighting program is required throughout the project duration:
  - shall provide, without delay, adequate fire fighting equipment
  - may require an in-house Fire Brigade

17

Portable Firefighting Equipment

- 1926.150
- Inspected regularly
- Well maintained
- Conspicuously located
- Access to all equipment at all times
- Warning system required
- Water supply required

18

Fixed Firefighting Equipment

- Fire extinguishers - 1926.150 (c)
  - Type 2A or better
  - One per 3000 square feet
  - 100 feet maximum travel distance
  - At least one per floor
  - At least one adjacent to stairway

19

1926.151—Fire Prevention

- Ignition hazards
  - Electrical wiring and equipment shall be installed in accordance with Subpart K- Electrical
  - "No Smoking" posted where dangerous
  - Engine exhausts shall be well away from combustibles

20

1926.151—Storage

- Open yard and indoor storage (c) & (d)
  - Storage of materials shall not inhibit egress
  - Maintain clearance around lights and heating units
  - 24 inch clearance around travel path of fire doors
  - No storage within 36 inches of a fire door

21

Flammable and Combustible Liquids

- 1926.152
  - Only approved Containers and Tanks
  - Indoor storage—Table F-2
  - Outside--limits on tanks and containers
  - Fire control
  - Dispensing and handling

22

Subpart G—Signs, Signals and Barricades—1926.200

- Shall be visible at all times
- Shall be removed once the hazard has passed
- Danger signs- Red upper panel
- Caution signs- Yellow upper panel
- Safety instructions- Green upper panel
- Flagmen required where signs and barricades are not adequate

23

Subpart H—Materials Handling, Storage, Use and Disposal

- Maximum safe floor loads shall be conspicuously posted
- Maximum safe floor loads shall not be exceeded
- Aisles and passageways shall be kept clear
- Working over material stored in hoppers, tanks or silos require lifelines

24

1926.250—Material Storage

- Noncompatible materials shall be segregated
- No storage within 6 feet of hoistways or floor openings
- No storage of materials on scaffolds or runways
- Safe stacking specifications listed

25

1926.251—Rigging Materials for Handling

- Inspected prior to each use
- Safe working load shall not be exceeded
- Makeshift fasteners prohibited
- Worn, corroded or abraded equipment shall be discarded
- When U bolts are used for eye splices, the U goes on the dead end of the cable

26

1926.252—Disposal of Waste Materials

- Covered chutes required for drops over 20 feet
- Internal drops without chutes require barricades and posting
- Disposal by burning shall comply with local regulations
- Flammable liquids and oily rags shall be kept in fire resistant covered containers until removed

27

Subpart I—Tools Hand and Power

- Hand tools- 1926.301
  - Unsafe tools shall not be issued or used
  - Wrenches shall not be used if the jaws are slipping
  - Hammers with mushroomed heads shall be replaced
  - Tool handles shall be tight, sound, and free from splinters

28

1926.302—Power-Operated Hand Tools

- Proper guarding required
- Electric power tools shall be either:
  - Double-insulated
  - Properly grounded
  - Used with GFCI
- Use of electric cords for hoisting or lowering is prohibited
- Cleaning with compressed air above
  30 psi not allowed (dead ended)

29

Subpart J—Welding and Cutting

- Noncombustible shielding required when arc welding or cutting
- All cables shall be fully insulated and capable of handling the maximum currents used
- When not in use, remove electrodes and isolate holder
- Instruction on safe welding methods required

30

1926.352—Fire Prevention

- Proper fire precautions are required:
  - Isolating welding and cutting operations
  - Removing fire hazards
  - Providing a fire watch
  - Take these same precautions on both sides of walls or floors
  - No hot work near flammable compounds, or high dust concentrations

31

1926.353—Ventilation

- During hot work operations, ventilation or air-line respirators are required when working in an enclosed space with:
  - Lead
  - Zinc
  - Cadmium
  - Chromium
  - Mercury
  - Beryllium

32

Ventilation

- Local ventilation or air-line respirators required when working with:
  - Stainless steel with inert-gas
  - Confined spaces
  - Unusual conditions which may cause contaminant accumulations

33

Subpart K—Electrical

- Shall comply with 1984 National Electric Code (ANSI/NFPA)
- GFCIs required or an assured equipment grounding program
- GFCIs required on all 120-volt receptacles that are not part of the permanent wiring

34

1926.404—Wiring Design and Protection

- Grounding program shall cover:
  - Extension cords
  - Receptacles
  - Cord and plug equipment

35

Assured Grounding Program Required Program Elements

- 1926.404 (b)(1)(iii)
- Written program description
- At least one competent person
- Daily visual inspections of all extension cords and cord and plug equipment
- Quarterly continuity tests of the equipment grounding conductors of receptacles, extension cords, and cord and plug equipment

36

1926.405—Wiring Methods

- Lamps shall be protected from breakage
- Temporary lights may not be suspended from their cord
- Portable lighting in wet or conductive locations require 12 volt systems or GFCIs
- Extension cords shall be the three-wire grounded type
- Construction sites require heavy duty cords

1926.416—General Requirements

- Work near live electrical circuits not allowed unless:
  - Circuit is deenergized and grounded
  - The part is guarded by insulation
  - Other effective means are used
- Where the exact location of underground lines is not known, workers using jackhammers or any tools that may contact a line shall wear insulated gloves

General Requirements

- Worn or frayed electrical cables shall not be used
- Extension cords may not be stapled,
  hung from nails or suspended by wire
- Deenergized circuits or equipment shall be tagged at all energizing points

Subpart L Scaffolding

- 1926.451(a)-general requirements
- Sound, rigid footing
- Erected, moved, dismantled under supervision of competent persons
- Guardrails and toeboards required on open edges > 10' above ground

Subpart M—Floor and Wall Openings

- 1926.500
  - Floor openings
    - Shall be covered or guarded by a guardrail with toeboard
    - Open sides or platforms above 6 feet shall be guarded
    - Floor holes shall be guarded or covered

Floor and Wall Openings

- Wall opening - An opening at least 30 inches up and down by 18 inches wide
  - Wall openings less than 3 feet above the floor leading to drops of more than 4 feet, shall be guarded
  - Toeboards required if bottom of wall opening is less than four inches above the working surface.

Built-Up Roofing Work

- 1926.500(g)
- On low-pitched roofs > 16' ground to eave height, a safety system is required:
  - Motion stopping system
  - Guardrails
  - Warning line
  - Safety monitoring system (< 50')

43

Subpart N—Cranes, Derricks, Hoists, Elevators and Conveyors

- Cranes and Derricks: 1926.550
  - Employer shall comply with manufacturer's specifications and limitations
  - Rated load capacities, operating speeds, warnings and instructions shall be conspicuously posted on all equipment
  - Barricade rear swing radius of crane

44

Cranes, Derricks, Hoists, Elevators and Conveyors

- Cranes and Derricks:
  - Maintain 10 foot minimum clearance from live power lines
  - Not to be used to hoist employees
  - Inspected before each use by a competent person
  - Annual inspection by a competent person, records kept

45

Hoists

- Hoists 1926.552
  - Rated load capacities, operating speeds, warnings and instructions shall be conspicuously posted
  - Hoistway doors shall be substantially guarded
  - Personnel hoistway doors require lock on landing side
  - Hoist cage shall have protective cover

Subpart O—Motor Vehicles, Mechanized Equipment, and Marine Operations

- .600 Equipment
- .601 Motor vehicles
- .602 Material handling equipment
  - earthmoving
  - excavating
  - lifting and hauling

General Requirements

- Vehicles shall be checked at the beginning of each shift
- Vehicles with obstructed rear view may not be used unless:
  - Vehicle has a back-up alarm
  - An observer signals it is safe
- Suspended machinery or equipment shall be substantially blocked before work underneath may proceed

Subpart P—Excavations

- 1926.650 (b) Definitions
- Personnel protection systems
- Hazardous atmospheres
- Registered professional

Excavations General Requirements

- 1926.651
- Utility companies shall be contacted to help locate underground utilities
- .652-Cave-in protection required:
  - Trenches over 5 feet deep
  - Wherever danger exists
- Protection may take the form of:
  - Shoring or support systems
  - Sloping of the ground, or equivalent means

Excavations

- Excavated material shall be stored at least 2 feet from the edge of the excavation
- Daily inspections by a competent person required
  - Evidence of possible cave-in or slide requires work to stop until precautions are taken
- Trenches over 4 feet deep require ladders or steps every 50 feet (25' horizontal travel)

Subpart Q—Concrete and Masonry Construction

- 1926.700
  - No construction loads shall be placed on a concrete structure until a qualified person approves
  - Protruding rebar which presents a hazard shall be guarded
  - No employees allowed to work underneath or ride in concrete buckets

52

Subpart R Steel Erection—1926.750

- Permanent floors shall be installed so that there are no more than eight stories above the highest permanent floor
- Temporary floors shall be maintained within 30 feet or two stories of the tier being worked on
- If temporary floors are not possible, safety nets are required whenever the fall potential exceeds 25 feet

53

Steel Erection

- Perimeter safety railing of 1/2 inch wire rope 42 inches high
- Structural members being hoisted into place shall remain attached to the hoisting line until the member is secured by at least two bolts at every connection

54

Subpart S—Underground Construction, Caissons, Cofferdams, and Compressed Air

- 1926.800
- Underground construction
  - (b) Safe access and egress shall be maintained
  - Unused openings shall be tightly covered and posted "Keep Out"
  - Check-in / check-out procedures shall be used

55

Underground Construction

- Employees shall be instructed in hazard recognition and avoidance
- A competent person shall perform air monitoring
- Fresh air shall be supplied in sufficient quantities to prevent harmful accumulation of dust, fumes, mists, vapors or gases

56

1926.803—Compressed Air

- Competent person present at all times
- Safety training required
- Experienced physician shall be retained
- Physical examination required before entering compressed air chamber
- Effective communication shall be maintained
- Requirements listed for all aspects of compression and decompression

57

Subpart T Demolition—1926.850

- Pre-demolition engineering survey required
- Shoring or bracing required if structure is damaged
- Utility lines shall be shut off and controlled
- Wall openings and floor openings shall be guarded or securely covered

58

Demolition

- Load supporting members shall not be cut or removed until all stories above have been removed
- Mechanical equipment shall not be used on floors or working surfaces unless the surfaces have sufficient strength

59

Subpart U—Blasting and Use of Explosives

- Only authorized, qualified persons shall handle or use explosives
- Explosive materials shall be stored in accordance with 27 CFR 181
- Smoking or open flames prohibited within 50 feet of explosives or detonator storage
- Safe and efficient loading procedures shall be established

60

Subpart V—Power Transmission and Distribution

- Before starting work, existing conditions shall be determined, by inspection or test
- Electrical equipment and lines shall be considered live until determined otherwise by testing or until grounding
- Operating voltage of equipment and lines shall be determined before working on or near energized parts
- Inspect rubber protective equipment before each use

61

Subpart W—Rollover Protective Structures; Overhead Protection

- Rollover protective structures required on:
  - Wheel type agricultural and industrial tractors
  - Crawler type tractors and loaders
  - Motor graders
  - Rubber-tired self propelled scrapers
  - Rubber-tired front-end loaders
  - Rubber-tired dozers

62

Subpart X—Stairways and Ladders

- 1926.1050
- Scope:
  - Applies to all stairways and ladders used in construction, alteration, repair and demolition

63

Stairways and Ladders

- 1926.1051-general requirements
- (a) shall be provided at points of access at 19" in elevation not serviced by ramp, runway, embankment or hoist
- (b) fall protection shall be provided (as required) before pertinent work begins

64

Stairways and Ladders

- 1926.1052 Stairways-general requirements
  - (a) uniform rise/run and in good traffic condition
  - (c) stairrails and handrails of four risers shall be provided on open sides and shall meet structural requirements

65

Stairways and Ladders

- 1926.1053 Ladders-general requirements
- (a) All ladders, including job made ladders shall meet structural requirements as specified
  - Where the climb is > 24', fixed ladders shall be equipped with personnel protection
  - Use of ladders to conform with placement, inspection and personnel behavior as specified

66

Stairways and Ladders

- .1060
- (a) Provide a training program to enable recognition of hazards of these walking/working surfaces.

Ground-Fault Protection on Construction Sites

U.S. Department of Labor
William E. Brock, Secretary

Occupational Safety and Health Administration
John A. Pendergrass, Assistant Secretary
1987 (Revised)

OSHA 3007

Insulation and Grounding

Insulation and grounding are two recognized means of preventing injury during electrical equipment operation. Conductor insulation may be provided by placing nonconductive material such as plastic around the conductor. Grounding may be achieved through the use of a direct connection to a known ground such as a metal cold water pipe.

Consider, for example, the metal housing or enclosure around a motor or the metal box in which electrical switches, circuit breakers, and controls are placed. Such enclosures protect the equipment from dirt and moisture and prevent accidental contact with exposed wiring. However, there is a hazard associated with housings and enclosures. A malfunction within the equipment—such as deteriorated insulation—may create an electrical shock hazard. Many metal enclosures are connected to a ground to eliminate the hazard. If a "hot" wire contacts a grounded enclosure, a ground fault results which normally will trip a circuit breaker or blow a fuse. Metal enclosures and containers are usually grounded by connecting them with a wire going to ground. This wire is called an equipment grounding conductor. Most portable electric tools and appliances are grounded by this means. There is one disadvantage to grounding: a break in the grounding system may occur without the user's knowledge.

Insulation may be damaged by hard usage on the job or simply by aging. If this damage causes the conductors to become exposed, the hazards of shocks, burns, and fire will exist. Double insulation may be used as additional protection on the live parts of a tool, but double insulation does not provide protection against defective cords and plugs or against heavy moisture
conditions

The use of a ground-fault circuit interrupter (GFCI) is one method used to overcome grounding and insulation deficiencies.

What is a GFCI?

The ground-fault circuit interrupter (GFCI) is a fast-acting circuit breaker which senses small imbalances in the circuit caused by current leakage to ground and, in a fraction of a second, shuts off the electricity. The GFCI continually matches

Ground-Fault Circuit Interrupter

GFCI monitors the difference in current flowing into the "hot" and out to the grounded neutral conductors. The difference (½ ampere in this case) will flow back through any available path, such as the equipment grounding conductor, and through a person holding the tool, if the person is in contact with a grounded object.

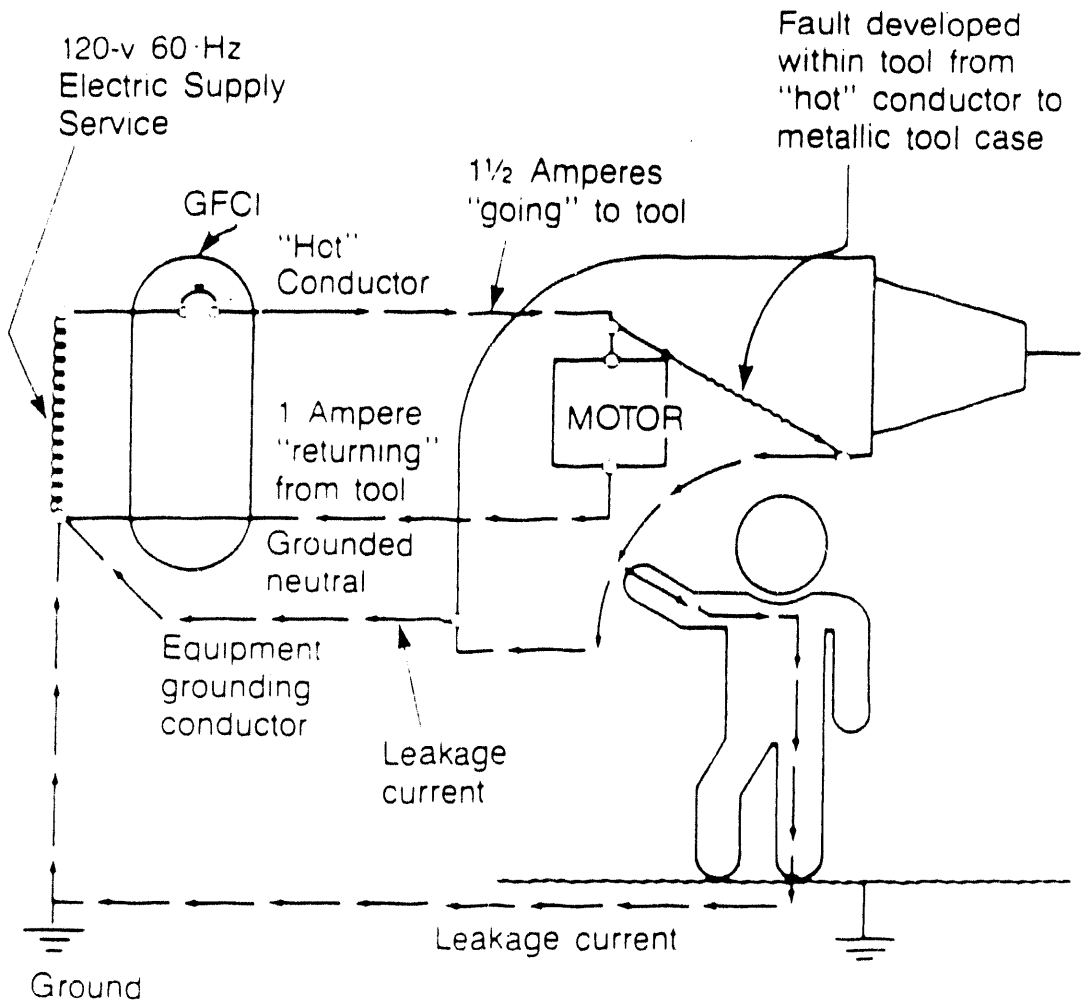

the amount of current going to an electrical device against the amount of current returning from the device along the electrical path. Whenever the amount "going" differs from the amount "returning" by approximately 5 milliamps, the GFCI interrupts the electric power within as little as 1/40 of a second (see diagram).

However, the GFCI will not protect the employee from line-to-line contact hazards (such as a person holding two "hot" wires or a hot and a neutral wire in each hand). It does provide protection against the most common form of electrical shock hazard—the ground fault. It also provides protection against fires, overheating, and destruction of insulation on wiring.

What Are the Hazards?

With the wide use of portable tools on construction sites, the use of flexible cords often becomes necessary. Hazards are created when cords, cord connectors, receptacles, and cord- and plug-connected equipment are improperly used and maintained.

Generally, flexible cords are more vulnerable to damage than is fixed wiring. Flexible cords must be connected to devices and to fittings so as to prevent tension at joints and terminal screws. Because a cord is exposed, flexible, and unsecured, joints and terminals become more vulnerable. Flexible cord conductors are finely stranded for flexibility, but the strands of one conductor may loosen from under terminal screws and touch another conductor, especially if the cord is subjected to stress or strain.

A flexible cord may be damaged by activities on the job, by door or window edges, by staples or fastenings, by abrasion from adjacent materials, or simply by aging. If the electrical conductors become exposed, there is a danger of shocks, burns, or fire. A frequent hazard on a construction site is a cord assembly with improperly connected terminals.

When a cord connector is wet, hazardous leakage can occur to the equipment grounding conductor and to humans who pick up that connector if they also provide a path to ground. Such leakage is not limited to the face of the connector but also develops at any wetted portion of it.

When the leakage current of tools is below 1 ampere, and the

grounding conductor has a low resistance, no shock should be perceived. However, should the resistance of the equipment grounding conductor increase, the current through the body also will increase. Thus, if the resistance of the equipment grounding conductor is significantly greater than 1 ohm, tools with even small leakages become hazardous.

Preventing and Eliminating Hazards

GFCIs can be used successfully to reduce electrical hazards on construction sites. Tripping of GFCIs—interruption of current flow—is sometimes caused by wet connectors and tools. It is good practice to limit exposure of connectors and tools to excessive moisture by using watertight or sealable connectors. Providing more GFCIs or shorter circuits can prevent tripping caused by the cumulative leakage from several tools or by leakages from extremely long circuits.

Employer's Responsibility

OSHA ground-fault protection rules and regulations have been determined necessary and appropriate for employee safety and health. Therefore, it is the employer's responsibility to provide either: (a) ground-fault circuit interrupters on construction sites for receptacle outlets in use and not part of the permanent wiring of the building or structure; or (b) a scheduled and recorded assured equipment grounding conductor program on construction sites, covering all cord sets, receptacles which are not part of the permanent wiring of the building or structure, and equipment connected by cord and plug which are available for use or used by employees.

Ground-Fault Circuit Interrupters

The employer is required to provide approved ground-fault circuit interrupters for all 120-vault, single phase, 15 and 20 ampere receptacle outlets on construction sites which are not a part of the permanent wiring of the building or structure and which are in use by employees. Receptacles on the ends of extension cords are not part of the permanent wiring and, therefore, must be protected by GFCIs whether or not the extension cord is plugged into permanent wiring. These GFCIs

monitor the current-to-the-load for leakage to ground. When this leakage exceeds 5 mA ± 1 mA, the GFCI interrupts the current. They are rated to trip quickly enough to prevent electrocution. This protection is required in addition to, not as a substitute for, the grounding requirements of OSHA safety and health rules and regulations, 29 CFR 1926. The requirements which the employer must meet, if he or she chooses the GFCI option, are stated in 29 CFR 1926. 404(b)(1)(ii) (see appendix).

Assured Equipment Grounding Conductor Program

The assured equipment grounding conductor program covers all cord sets, receptacles which are not a part of the permanent wiring of the building or structure, and equipment connected by cord and plug which are available for use or used by employees. The requirements which the program must meet are stated in 29 CFR 1926.404(b)(1)(iii) (see appendix), but employers may provide additional tests or procedures. OSHA requires that a written description of the employer's assured equipment grounding conductor program, including the specific procedures adopted, be kept at the jobsite. This program should outline the employer's specific procedures for the required equipment inspections, tests, and test schedule.

The required tests must be recorded, and the record maintained until replaced by a more current record. The written program description and the recorded tests must be made available, at the jobsite, to OSHA and to any affected employee upon request. The employer is required to designate one or more **competent persons** to implement the program.

Electrical equipment noted in the assured equipment grounding conductor program must be visually inspected for damage or defects before each day's use. Any damaged or defective equipment must not be used by the employee until repaired.

Two tests are required by OSHA. One is a continuity test to ensure that the equipment grounding conductor is electrically continuous. It must be performed on all cord sets, receptacles which are not part of the permanent wiring of the building or structure, and on cord- and plug-connected equipment which are required to be grounded. This test may be performed using a simple continuity tester, such as a lamp and battery, a bell and battery, an ohmmeter, or a receptacle tester.

The other test must be performed on receptacles and plugs to ensure that the equipment grounding conductor is connected to its proper terminal. This test can be performed with the same equipment used in the first test.

These tests are required before first use, after any repairs, after damage is suspected to have occurred, and at 3-month intervals. Cord sets and receptacles which are essentially fixed and not exposed to damage must be tested at 6-month intervals. Any equipment which fails to pass the required tests shall not be made available for or used by employees.

Summary

This publication provides information to help guide employers and employees in protecting themselves against 120-volt electrical hazards on the construction site, through the use of ground-fault circuit interrupters or through an assured equipment grounding conductor program.

When planning your program, remember to use the OSHA rules and regulations as a guide to ensure employee safety and health. Following these rules and regulations will help reduce the number of injuries and accidents from electrical hazards. Work disruptions should be minor, and the necessary inspections and maintenance should require little time.

An effective safety and health program requires the cooperation of both the employer and employees.

If you need additional information in planning your program, contact the OSHA office nearest you. See the listing of OSHA regional offices.

Equipment Grounding Conductor PROGRAM

1. Written Description
2. Competent Person to Implement
3. Inspection and Tests
4. Record of Tests

INSPECTIONS

Visual inspection of following:

1. cord sets
2. cap, plug and receptacle of cord sets
3. equipment connected by cord and plug

Exceptions

- receptacles and cord sets which are fixed and not exposed to damage

Frequency of Inspections.

- before each day's use

TESTS

Conduct tests for:

1. continuity of equipment grounding conductor
2. proper terminal connection of equipment grounding conductor

Frequency of Tests:

- before first use
- after repair, and before placing back in service
- before use, after suspected damage
- every 3 months, except that cord sets and receptacles that are fixed and exposed to damage can be tested every 6 months

Appendix

Construction

Safety and Health Regulations Part 1926 Subpart K (Partial)

§ 1926.404 Wiring design and protection.

(b) *Branch circuits*—(1) *Ground-fault protection*—(i) *General.* The employer shall use either ground-fault circuit interrupters as specified in paragraph (b)(1)(ii) of this section or an assured equipment grounding conductor program as specified in paragraph (b)(1)(iii) of this section to protect employees on construction sites. These requirements are in addition to any other requirements for equipment grounding conductors.

(ii) *Ground-fault circuit interrupters.* All 120-volt, single-phase, 15- and 20-ampere receptacle outlets on construction sites, which are not a part of the permanent wiring of the building or structure and which are in use by employees, shall have approved ground-fault circuit interrupters for personnel protection. Receptacles on a two-wire, single-phase portable or vehicle-mounted generator rated not more than 5kW, where the circuit conductors of the generator are insulated from the generator frame and all other grounded surfaces, need not be protected with ground-fault circuit interrupters.

(iii) *Assured equipment grounding conductor program.* The employer shall establish and implement an assured equipment grounding conductor program on construction sites covering all cord sets, receptacles which are not a part of the building or structure, and equipment connected by cord and plug which are available for use or used by employees. This program shall comply with the following minimum requirements:

(A) A written description of the program, including the specific procedures adopted by the employer, shall be available at the jobsite for inspection and copying by the Assistant Secretary and any affected employee.

(B) The employer shall designate one or more competent persons (as defined in § 1926.32(f)) to implement the program.

(C) Each cord set, attachment cap, plug and receptacle of cord sets, and any equipment connected by cord and plug, except cord sets and receptacles which are fixed and not exposed to damage, shall be visually inspected before each day's use for

external defects, such as deformed or missing pins or insulation damage, and for indications of possible internal damage. Equipment found damaged or defective shall not be used until repaired.

(D) The following tests shall be performed on all cord sets, receptacles which are not a part of the permanent wiring of the building or structure, and cord- and plug-connected equipment required to be grounded:

(1) All equipment grounding conductors shall be tested for continuity and shall be electrically continuous.

(2) Each receptacle and attachment cap or plug shall be tested for correct attachment of the equipment grounding conductor. The equipment grounding conductor shall be connected to its proper terminal.

(E) All required tests shall be performed:

(1) Before first use;

(2) Before equipment is returned to service following any repairs;

(3) Before equipment is used after any incident which can be reasonably suspected to have caused damage (for example, when a cord set is run over); and

(4) At intervals not to exceed 3 months, except that cord sets and receptacles which are fixed and not exposed to damage shall be tested at intervals not exceeding 6 months.

(F) The employer shall not make available or permit the use by employees of any equipment which has not met the requirements of this paragraph (b)(1)(iii) of this section.

(G) Tests performed as required in this paragraph shall be recorded. This test record shall identify each receptacle, cord set, and cord- and plug-connected equipment that passed the test and shall indicate the last date it was tested or the interval for which it was tested. This record shall be kept by means of logs, color coding, or other effective means and shall be maintained until replaced by a more current record. The record shall be made available on the jobsite for inspection by the Assistant Secretary and any affected employee.

Related Publications

Construction Industry—OSHA 2207

Code of Federal Regulations—Title 29, Parts 1900-1910

Consultation Services for the Employer—OSHA 3047

All About OSHA—OSHA 2056

OSHA Inspections—OSHA 2098

Electrical Standards for Construction—OSHA 3097

Controlling Electrical Hazards—OSHA 3075

U.S. Department of Labor
Occupational Safety and Health Administration
Regional Offices

Region I
(CT*, MA, ME, NH, RI, VT*)
16-18 North Street
1 Dock Square Building
4th Floor
Boston, MA 02109
Telephone: (617) 223-6710

Region II
(NJ, NY*, Puerto Rico*, Virgin Islands*)
1 Astor Plaza, Room 3445
1515 Broadway
New York, NY 10036
Telephone: (212) 944-3432

Region III
(DC, DE, MD*, PA, VA*, WV)
Gateway Building, Suite 2100
3535 Market Street
Philadelphia, PA 19104
Telephone: (215) 596-1201

Region IV
(AL, FL, GA, KY*, MS, NC*, SC*, TN*)
1375 Peachtree Street, N.E.
Suite 587
Atlanta, GA 30367
Telephone: (404) 347-3573

Region V
(IL, IN*, MI*, MN*, OH, WI)
230 South Dearborn Street
32nd Floor, Room 3244
Chicago, IL 60604
Telephone: (312) 353-2220

Region VI
(AR, LA, NM*, OK, TX)
525 Griffin Square Building, Room 602
Dallas, TX 75202
Telephone: (214) 767-4731

Region VII
(IA*, KS, MO, NE)
911 Walnut Street, Room 406
Kansas City, MO 64106
Telephone: (816) 374-5861

Region VIII
(CO, MT, ND, SD, UT*, WY*)
Federal Building, Room 1554
1961 Stout Street
Denver, CO 80294
Telephone: (303) 844-3061

REGION IX
(American Samoa, AZ*, CA*, Guam, HI*, NV*, Pacific Trust Territories)
P.O. Box 36017
450 Golden Gate Avenue
San Francisco, CA 94102
Telephone: (415) 556-7260

Region X
(AK*, ID, OR*, WA*)
Federal Office Building
Room 6003
909 First Avenue
Seattle, WA 98174
Telephone: (206) 442-5930

*These states and territories operate their own OSHA-approved job safety and health programs (except Connecticut and New York whose plans cover public employees only).

FOR SAFETY'S SAKE...
VOL 10-92

milwaukee
construction industry
safety council

Safety Director
Edward J. Hayden

OSHA MANDATED TRAINING FOR CONSTRUCTION WORKERS

NOV 30 1992

milwaukee
construction industry
safety council

3289 N. Mayfair Road
P.O. Box 26569
Milwaukee, WI 53226

Phone: (414) 778-4100
Fax: (414) 778-4119

BULK RATE
U.S. POSTAGE
PAID
Milwaukee, WI
Permit No. 5247

AGC OF SAN DIEGO
P.O. Box 81649
San Diego, CA 92138

DATED MAIL --- PLEASE EXPEDITE

Construction Training Requirements

The following training requirements have been excerpted from Title 29, Code of Federal Regulations Part 1926. Note that in addition to these requirements, Part 1910, relating to general industry, also contains applicable training standards.

Subject and Standard Number	Training Requirement
General Safety and Health Provisions 1926.20(b)(2) and (4)	(2) Such programs [as may be necessary to comply with this part] shall provide for frequent and regular inspections of the job sites, materials, and equipment to be made by competent persons [capable of identifying existing and predictable hazards in the surroundings or working conditions which are unsanitary, hazardous, or dangerous to employees, and who have authorization to take prompt corrective measures to eliminate them designated by the employers.]
	(4) The employer shall permit only those employees qualified [one who, by possession of a recognized degree, certificate, or professional standing, or who by extensive knowledge, training, and experience, has successfully demonstrated his ability to solve or resolve problems relating to the subject matter, the work, or the project] by training or experience to operate equipment and machinery.
Safety Training and Education 1926.21(a)	(a) General requirements. The Secretary shall, pursuant to section 107(f) of the Act, establish and supervise programs for the education and training of employers and employees in the recognition, avoidance and prevention of unsafe conditions in employments covered by the Act.
1926.21(b)(1) through (6)	(1) The employer should avail himself of the safety and health training programs the Secretary provides.
	(2) The employer shall instruct each employee in the recognition and avoidance of unsafe conditions and the regulations applicable to his work environment to control or eliminate any hazards or other exposure to illness or injury.
	(3) Employees required to handle or use poisons, caustics, and other harmful substances shall be instructed regarding their safe handling and use, and be made aware of the potential hazards, personal hygiene, and personal protective measures required.
	(4) In job site areas where harmful plants or animals are present, employees who may be exposed shall be instructed regarding the potential hazards and how to avoid injury, and the first aid procedures to be used in the event of injury.
	(5) Employees required to handle or use flammable liquids, gases, or toxic materials shall be instructed in the safe handling and use of these materials and made aware of the specific requirements contained in Subparts D, F, and other applicable subparts of this part.
	(6) (i) All employees required to enter into confined or enclosed spaces shall be instructed as to the nature of the hazards involved, the necessary precautions to be taken, and in the use of protective and emergency equipment required. The employer shall comply with any specific regulations that apply to work in dangerous or potentially dangerous areas.
	(6) (ii) For purposes of subdivision (i) of this subparagraph, "confined or enclosed space" means any space having a limited means of egress, which is subject to the accumulation of toxic or flammable contaminants or has an oxygen deficient atmosphere. Confined or enclosed spaces include, but are not limited to, storage tanks, process vessels, bins, boilers,

	ventilation or exhaust ducts, sewers, underground utility vaults, tunnels, pipelines, and open top spaces more than 4 feet in depth such as pits, tubs, vaults, and vessels.
Medical Services and First Aid 1926.50(c)	(c) In the absence of an infirmary, clinic, hospital, or physician that is reasonably accessible in terms of time and distance to the worksite which is available for the treatment of injured employees, a person who has a valid certificate in first-aid training from the U.S. Bureau of Mines, the American Red Cross, or equivalent training that can be verified by documentary evidence, shall be available at the worksite to render first aid.
Ionizing Radiation 1926.53(b)	(b) Any activity which involves the use of radioactive materials or X-rays, whether or not under license from the Atomic Energy Commission [Nuclear Regulatory Commission] shall be performed by competent persons specially trained in the proper and safe operation of such equipment. In the case of materials used under Commission license, only persons actually licensed, or competent persons under the direction and supervision of the licensee, shall perform such work.
Nonionizing Radiation 1926.54(a) and (b)	(a) Only qualified and trained employees shall be assigned to install, adjust and operate laser equipment. (b) Proof of qualification of the laser equipment operator shall be available and in possession of the operator at all times.
Gases, Vapors, Fumes, Dusts and Mists 1926.55(b)	(b) To achieve compliance with paragraph (a) of this section, administrative or engineering controls must first be implemented whenever feasible. When such controls are not feasible to achieve full compliance, protective equipment or other protective measures shall be used to keep the exposure of employees to air contaminants within the limits prescribed in this section. Any equipment and technical measures used for this purpose must first be approved for each particular use by a competent industrial hygienist or other technically qualified person. Whenever respirators are used, their use shall comply with § 1926.103.
Asbestos, Tremolite, Anthophyllite, and Actinolite 1926.58(k)(3)	(3) *Employee information and training.* (i) The employer shall institute a training program for all employees exposed to airborne concentrations of asbestos, tremolite, anthophyllite, actinolite, or a combination of these minerals in excess of the action level and shall ensure their participation in the program. (ii) Training shall be provided prior to or at the time of initial assignment, unless the employee has received equivalent training within the previous 12 months, and at least annually thereafter. (iii) The training program shall be conducted in a manner that the employee is able to understand. The employer shall ensure that each such employee is informed of the following: (A) Methods of recognizing asbestos, tremolite, anthophylite, or actinolite exposure; (b) The health effects associated with asbestos, tremolite, anthophyllite, or actinolite exposure; (C) The relationship between smoking and asbestos, tremolite, anthophyllite, and actinolite in producing lung cancer; (D) The nature of operations that could result in exposure to asbestos, tremolite, anthophyllite, or actinolite, the importance of necessary protective controls to minimize exposure including, as applicable, engineering controls, work practices, respirators, housekeeping procedures, hygiene facilities, protective clothing, decontamination procedures, emergency procedures, and waste disposal procedures, and any necessary instruction in the use of these controls and procedures; (E) The purpose, proper use, fitting instructions, and limitations of respirators as required by 29 CFR 1910.134; (f) The appropriate work practices for performing the asbestos, tremolite, anthophyllite, or actinolite job; and (G) Medical surveillance program requirements. (H) A review of this standard, including appendices.

(4) *Access to training materials.* (i) The employer shall make readily available to all affected employees without cost all written materials relating to the employee training program, including a copy of this regulation.

(ii) The employer shall provide to the Assistant Secretary and the Director, upon request, all information and training materials relating to the employee information and training program.

Hearing Protection 1926.101(b)

(b) Ear protective devices inserted in the ear shall be fitted or determined individually by competent persons.

Respiratory Protection 1926.103(c)(1)

(1) Employees required to use respiratory protective equipment approved for use in atmospheres immediately dangerous to life shall be thoroughly trained in its use. Employees required to use other types of respiratory protective equipment shall be instructed in the use and limitations of such equipment.

Fire Protection 1926.150(a)(5)

(5) As warranted by the project, the employer shall provide a trained and equipped firefighting organization (Fire Brigade) to assure adequate protection to life. "Fire brigade" means an organized group of employees that are knowledgeable, trained, and skilled in the safe evacuation of employees during emergency situations and in assisting in firefighting operations.

1926.150(c)(1)(viii)

(viii) Portable fire extinguishers shall be inspected periodically and maintained in accordance with Maintenance and Use of Portable Fire Extinguishers, NFPA No. 10A-1970.

From ANSI Standard 10A-1970. The owner or occupant of a property in which fire extinguishers are located has an obligation for the care and use of these extinguishers at all times. By doing so, he is contributing to the protection of life and property. The nameplate(s) and instruction manual should be read and thoroughly understood by all persons who may be expected to use extinguishers.

"1120. To discharge this obligation he should give proper attention to the inspection, maintenance, and recharging of this fire protective equipment. He should also train his personnel in the correct use of fire extinguishers on the different types of fires which may occur on his property.

"3020. Persons responsible for performing maintenance operations come from three major groups:

"Trained industrial safety or maintenance personnel.

"Extinguisher service agencies.

"Individual owners (e.g., self-employed. . .)."

Signaling 1926.201(a)(2)

(2) Signaling directions by flagmen shall conform to American National Standards Institute D6.1-1971, Manual on Uniform Traffic Control Devices for Streets and Highways.

Powder-Operated Hand Tools 1926.302(e)(1) and (12)

(1) Only employees who have been trained in the operation of the particular tool in use shall be allowed to operate a powder-actuated tool.

(12) Powder-actuated tools used by employees shall meet all other applicable requirements of American National Standards Institute, A10.3-1970, Safety Requirements for Explosive-Actuated Fastening Tools.

Woodworking Tools 1926.304(f)

(f) Other requirements. All woodworking tools and machinery shall meet other applicable requirements of American National Standards Institute, 01.1-1961, Safety Code for Woodworking Machinery.

From ANSI Standard 01.1-1961, Selection and Training of Operators. Before a worker is permitted to operate any woodworking machine, he shall receive instructions in the hazards of the machine and the safe method of its operation. Refer to A9.7 of the Appendix.

"A9.7 Selection and Training of Operators. Operation of Machines, Tools, and Equipment. General.

"(1) Learn the machine's applications and limitations, as well as the specific potential hazards peculiar to this machine. Follow available operating instructions and safety rules carefully.

"(2) Keep working area clean and be sure adequate lighting is available.

"(3) Do not wear loose clothing, gloves, bracelets, necklaces, or ornaments. Wear face, eye, ear, respiratory, and body protection devices, as indicated for the operation or environment.

"(4) Do not use cutting tools larger or heavier than the machine is designed to accommodate. Never operate a cutting tool at greater speed than recommended.

"(5) Keep hands well away from saw blades and other cutting tools. Use a push stock or push block to hold or guide the work when working close to cutting tool.

"(6) Whenever possible, use properly locked clamps, jig, or vise to hold the work.

"(7) Combs (feather boards) shall be provided for use when an applicable guard cannot be used.

"(8) Never stand directly in line with a horizontally rotating cutting tool. This is particularly true when first starting a new tool, or a new tool is initially installed on the arbor.

"(9) Be sure the power is disconnected from the machine before tools are serviced.

"(10) Never leave the machine with the power on.

"(11) Be positive that hold-downs and antikickback devices are positioned properly, and that the workpiece is being fed through the cutting tool in the right direction.

"(12) Do not use a dull, gummy, bent, or cracked cutting tool.

"(13) Be sure that keys and adjusting wrenches have been removed before turning power on.

"(14) Use only accessories designed for the machine.

"(15) Adjust the machine for minimum exposure of cutting tool necessary to perform the operation."

Gas Welding and Cutting 1926.350(d)(1) through (6)

(d) Use of fuel gas. The employer shall thoroughly instruct employees in the safe use of fuel gas as follows:

(1) Before a regulator to a cylinder valve is connected, the valve shall be opened slightly and closed immediately. (This action is generally termed "cracking" and is intended to clear the valve of dust or dirt that might otherwise enter the regulator.) The person cracking the valve shall stand to one side of the outlet, not in front of it. The valve of a fuel gas cylinder shall not be cracked where the gas would reach welding work, sparks, flame, or other possible sources of ignition.

(2) The cylinder valve shall always be opened slowly to prevent damage to the regulator. For quick closing, valves on fuel gas cylinders shall not be opened more than 1-1/2 turns. When a special wrench is required, it shall be left in position on the stem of the valve while the cylinder is in use so that the fuel gas flow can be shut off quickly in case of an emergency. In the case of manifolded or coupled cylinders, at least one such wrench shall always be available for immediate use. Nothing shall be placed on top of a fuel gas cylinder, when in use, which may damage the safety device or interfere with the quick closing of the valve.

(3) Fuel gas shall not be used from cylinders through torches or other devices which are equipped with shutoff valves without reducing the pressure through a suitable regulator attached to the cylinder valve or manifold.

(4) Before a regulator is removed from a cylinder valve, the cylinder valve shall always be closed and the gas released from the regulator.

(5) If, when the valve on a fuel gas cylinder is opened, there is found to be a leak around the valve stem, the valve shall be closed and the gland nut tightened. If this action does not stop the leak, the use of the cylinder shall be discontinued, and it shall be properly tagged and removed from the work area. In the event that fuel gas should leak from the cylinder valve, rather than from the valve stem, and the gas cannot be shut off, the cylinder shall be properly tagged and removed from the work area. If a regulator attached to a cylinder valve will effectively stop a leak through the valve seat, the cylinder need not be removed from the work area.

(6) If a leak should develop at a fuse plug or other safety device, the cylinder shall be removed from the work area.

[illegible]6.350(j)

(j) Additional rules. for Additional details not covered in this subpart, applicable technical portions of American National Standards Institute, Z49.1-1967, Safety in Welding and Cutting, shall apply.

From ANSI Standard Z49.1-1967, Fire Watch Duties. Fire watchers shall be trained in the use of fire extinguishing equipment. They shall be familiar with facilities for sounding an alarm in the event of a fire. They shall watch for fires in all exposed areas, try to extinguish them only when obviously within the capacity of the equipment available, or otherwise sound the alarm. A fire watch shall be maintained for at least a half hour after completion of welding or cutting operations to detect and extinguish possible smoldering fires."

Arc Welding and Cutting 1926.351(d)(1) through (5)

(d) Operating instructions. Employers shall instruct employees in the safe means of arc welding and cutting as follows:

(1) When electrode holders are to be left unattended, the electrodes shall be removed and the holders shall be so placed or protected that they cannot make electrical contact with employees or conducting objects.

(2) Hot electrode holders shall not be dipped in water; to do so may expose the arc welder or cutter to electric shock.

(3) When the arc welder or cutter has occasion to leave his work or to stop work for any appreciable length of time, or when the arc welding or cutting machine is to be moved, the power supply switch to the equipment shall be opened.

(4) Any faulty or defective equipment shall be reported to the supervisor.

(5) Other requirements, as outlined in Article 630, National Electrical Code, NFPA 70-1971; ANSI C1-1971 (Rev. of 1968), Electric Welders, shall be used when applicable.

[illegible] Prevention [illegible]6.352(e)

(e) When the welding, cutting, or heating operation is such that normal fire prevention precautions are not sufficient, additional personnel shall be assigned to guard against fire while the actual welding, cutting, or heating operation is being performed, and for a sufficient period of time after completion of the work to ensure that no possibility of fire exists. Such personnel shall be instructed as to the specific anticipated fire hazards and how the firefighting equipment provided is to be used.

Welding, Cutting and Heating in Way of Preservative Coatings 1926.354(a)

(a) Before welding, cutting, or heating is commenced on any surface covered by a preservative coating whose flammability is not known, a test shall be made by a competent person to determine its flammability. Preservative coatings shall be considered to be highly flammable when scrapings burn with extreme rapidity.

Ground-Fault Protection 1926.404(b)(iii)(B)

(iii)(B) The employer shall designate one or more competent persons (as defined in § 1926.32(f)) to implement the program.

Scaffolding 1926.451(a)(3)

(3) No scaffold shall be erected, moved, dismantled, or altered except under the supervision of competent persons.

1926.451(b)(16)

(16) All wood pole scaffolds 60 feet or less in height shall be constructed and erected in accordance with Tables L-4 to 10. If they are over 60 feet in height, they shall be designed by a qualified engineer competent in this field, and it shall be constructed and erected in accordance with such design.

1926.451(c) (4) and (5)

(4) Tube and coupler scaffolds shall be limited in heights and working levels to those permitted in Tables L-10, 11, and 12. Drawings and specifications of all tube and coupler scaffolds above the limitations in Tables L-10, 11, and 12 shall be designed by a qualified engineer competent in this field.

(5) All tube and coupler scaffolds shall be constructed and erected to support four times the maximum intended loads, as set forth in Tables L-10, 11, and 12, or as set forth in the specifications by a licensed professional engineer competent in this field.

[illegible].451(d)(9)

(9) Drawings and specifications for all frame scaffolds over 125 feet in height above the base plates shall be designed by a registered professional engineer.

1926.451(g)(3)	(3) Unless outrigger scaffolds are designed by a registered professional engineer competent in this field, they shall be constructed and erected in accordance with Table L-13. Outrigger scaffolds, designed by a registered professional engineer, shall be constructed and erected in accordance with such design.
1926.451(h)(6) and (14)	(h) Masons' adjustable multiple-point suspension scaffolds. (6) Where the overhang exceeds 6 feet 6 inches, outrigger beams shall be composed of stronger beams or multiple beams and be installed under the supervision of a competent person. (14) Each scaffold shall be installed or relocated under the supervision of a competent person.
1926.451(k)(10)	(k) Single-point adjustable suspension scaffolds. (10) For additional details not covered in this paragraph, applicable technical portions of American National Standards Institute, A120.1-1970, Power-Operated Devices for Exterior Building Maintenance Powered Platforms, shall be used. From ANSI Standard A120 1-1970, "Qualified Operators. Powered platform shall be operated only by qualified persons who have been instructed in the operation and in the inspection, with respect to safe operating condition of the particular powered platform to be operated."
Guarding of Low-Pitched Roof Perimeters During the Performance of Built-Up Roofing Work 1926.500(g)(6)	(6) *Training.* (i) The employer shall provide a training program for all employees engaged in built-up roofing work so that they are able to recognize and deal with the hazards of falling associated with working near a roof perimeter. The employees shall also be trained in the safety procedures to be followed in order to prevent such falls. (ii) The employer shall assure that employees engaged in built-up roofing work have been trained and instructed in the following areas: (a) The nature of fall hazards in the work area near a roof edge; (b) The function, use, and operation of the MSS system, warning line, and safety monitoring systems to be used; (c) The correct procedures for erecting, maintaining, and disassembling the systems to be used; (d) The role of each employee in the safety monitoring system when this system is used; (e) The limitations on the use of mechanical equipment; and (f) The correct procedures for the handling and storage of equipment and materials. (iii) Training shall be provided for each newly hired employee, and for all other employees as necessary, to assure that employees maintain proficiency in the areas listed in paragraph (g)(6)(ii) of this section.
Cranes and Derricks 1926.550(a)(1), (5), and (6)	(1) The employer shall comply with the manufacturer's specifications and limitations applicable to the operation of any and all cranes and derricks. Where manufacturer's specifications are not available, the limitations assigned to the equipment shall be based on the determinations of a qualified engineer competent in this field and such determinations will be appropriately documented and recorded. Attachments used with cranes shall not exceed the capacity, rating, or scope recommended by the manufacturer. (5) The employer shall designate a competent person who shall inspect all machinery and equipment prior to each use, and during use, to make sure it is in safe operating condition. Any deficiencies shall be repaired, or defective parts replaced, before continued use.
1926.550(g)(4)	(g) Personnel Platforms. The personnel platform and suspension system shall be designed by a qualified engineer or a qualified person competent in structural design.
1926.550(g)(5)(iv)	(g) A visual inspection of the crane or derrick, rigging, personnel platform, and the crane or derrick base support or ground shall be conducted by a competent person immediately after the trial lift to determine whether the testing has exposed any defect or produced any adverse effect upon any component or structure.

Material Hoists, Personnel Hoists, and Elevators 1926.552(a)(1)	(1) The employer shall comply with the manufacturer's specifications and limitations applicable to the operation of all hoists and elevators. Where manufacturer's specifications are not available, the limitations assigned to the equipment shall be based on the determinations of a professional engineer competent in the field.
1926.552(b)(7)	(7) All material hoist towers shall be designed by a licensed professional engineer.
1926.552(c)(15) and (17) (i)	(c) Personnel hoists. (15) Following assembly and erection of hoists, and before being put in service, an inspection and test of all functions and safety devices shall be made under the supervision of a competent person. A similar inspection and test is required following major alteration of an existing installation. All hoists shall be inspected and tested at not more than 3-month intervals. Records shall be maintained and kept on file for the duration of the job. (17)(i) Personnel hoists used in bridge tower construction shall be approved by a registered professional engineer and erected under the supervision of a qualified engineer competent in this field.
Material Handling Equipment 1926.602(c)(1)(vi)	(c) Lifting and hauling equipment (other than equipment covered under Subpart N of this part). (1)(vi) All industrial trucks in use shall meet the applicable requirements of design, construction, stability, inspection, testing, maintenance, and operation, as defined in American National Standards Institute B56.1-1969, Safety Standards for Powered Industrial Trucks. From ANSI Standard B56.1-1969, "Operator Training. Only trained and authorized operators shall be permitted to operate a powered industrial truck. Methods shall be devised to train operators in the safe operation of powered industrial trucks. Badges or other visual indication of the operators' authorization should be displayed at all times during work period."
Site Clearing 1926.604(a)(1)	(1) Employees engaged in site clearing shall be protected from hazards of irritant and toxic plants and suitably instructed in the first-aid treatment available.
Excavations General Protection Requirements (Excavations, Trenching, and Shoring) 1926.650(i)	(i) Daily inspections of excavations shall be made by a competent person. If evidence of possible cave-ins or slides is apparent, all work in the excavation shall cease until the necessary precautions have been taken to safeguard the employees.
1926.651(i)(2)	(iii) A registered professional engineer has approved the determination that the structure is sufficiently removed from the excavation so as to be unaffected by the excavation activity; or (iv) A registered professional engineer has approved the determination that such excavation work will not pose a hazard to employees. (k) Support systems shall be planned and designed by a qualified person when excavation is in excess of 20 feet in depth, adjacent to structures or improvements, or subject to vibration or ground water. (o) If the stability of adjoining buildings or walls is endangered by excavations, shoring, bracing, or underpinning shall be provided as necessary to insure their safety. Such shoring, bracing, or underpinning shall be inspected daily or more often, as conditions warrant, by a competent person and the protection effectively maintained. (x) Where ramps are used for employees or equipment, they shall be designed and constructed by qualified persons in accordance with accepted engineering requirements.
Concrete and Masonry Construction 1926.701(a)	(a) No construction loads shall be placed on a concrete structure or portion of a concrete structure unless the employer determines, based on information received from a person, who is qualified in structural design, that the structure or portion of the structure is capable of supporting the loads.
1926.703(b)(8)(i)	(i) The design of the shoring shall be prepared by a qualified designer and the erected shoring shall be inspected by an engineer qualified in structural design.

Bolting, Riveting, Fitting-Up, and Plumbing-Up 1926.752(d)(4)	(4) Plumbing-up guys shall be removed only under the supervision of a competent person.
Underground Construction 1926.800(d)	(d) *Safety instruction.* All employees shall be instructed in the recognition and avoidance of hazards associated with underground construction activities including, where appropriate, the following subjects: (1) Air monitoring; (2) Ventilation; (3) Illumination; (4) Communications; (5) Flood control; (6) Mechanical equipment; (7) Personal protective equipment; (8) Fire prevention and protection; and (10) Emergency procedures, including evacuation plans and check-in/check-out systems.
Compressed Air 1926.803(a)(1) and (2)	(1) There shall be present, at all times, at least one competent person designated by and representing the employer, who shall be familiar with this subpart in all respects, and responsible for full compliance with these and other applicable subparts. (2) Every employee shall be instructed in the rules and regulations which concern his safety or the safety of others.
1926.803(b)(1) and (10)(xii)	(1) There shall be retained one or more licensed physicians familiar with and experienced in the physical requirements and the medical aspects of compressed air work and the treatment of decompression illness. He shall be available at all times while work is in progress in order to provide medical supervision of employees employed in compressed air work. He shall himself be physically qualified and be willing to enter a pressurized environment. (10) The medical lock shall: (xii) Be in constant charge of an attendant under the direct control of the retained physician. The attendant shall be trained in the use of the lock and suitably instructed regarding steps to be taken in the treatment of employee exhibiting symptoms compatible with a diagnosis of decompression illness.
1926.803(e)(1)	(1) Every employee going under air pressure for the first time shall be instructed on how to avoid excessive discomfort.
1926.803(h)(1)	(1) At all times there shall be a thoroughly experienced, competent, and reliable person on duty at the air control valves as a gauge tender who shall regulate the pressure in the working areas. During tunneling operations, one gauge tender may regulate the pressure in not more than two headings: Provided, that the gauge and controls are all in one location. In caisson work, there shall be a gauge tender for each caisson.
Preparatory Operations 1926.850(a)	(a) Prior to permitting employees to start demolition operations, an engineering survey shall be made, by a competent person, of the structure to determine the condition of the framing, floors, and walls, and possibility of unplanned collapse of any portion of the structure. Any adjacent structure where employees may be exposed shall also be similarly checked. The employer shall have in writing evidence that such a survey has been performed.
Chutes 1926.852(c)	(c) A substantial gate shall be installed in each chute at or near the discharge end. A competent employee shall be assigned to control the operation of the gate, and the backing and loading of trucks.
Mechanical Demolition 1926.859(g)	(g) During demolition, continuing inspections by a competent person shall be made as the work progresses to detect hazards resulting from weakened or deteriorated floors, or walls, or loosened material. No employee shall be permitted to work where such hazards exist until they are corrected by shoring, bracing, or other effective means.
General Provisions (Blasting and Use of Explosives) 1926.900(a)	(a) The employer shall permit only authorized and qualified persons to handle and use explosives.
1926.900(k)(3)(i)	(i) The prominent display of adequate signs, warning against the use of mobile radio transmitters, on all roads within 1,000 feet of blasting operations. Whenever adherence to the 1,000-foot distance would create an operational handicap, a competent person shall be consulted to evaluate the particular situation, and alternative provisions may be made

which are adequately designed to prevent any premature firing of electric blasting caps. A description of any such alternatives shall be reduced to writing and shall be certified as meeting the purposes of this subdivision by the competent person consulted. The description shall be maintained at the construction site during the duration of the work, and shall be available for inspection by representatives of the Secretary of Labor.

1926.900(q)

(q) All loading and firing shall be directed and supervised by competent persons thoroughly experienced in this field.

Blaster Qualifications 1926.901(c), (d), and (e)

(c) A blaster shall be qualified, by reason of training, knowledge, or experience, in the field of transporting, storing, handling, and use of explosives, and have a working knowledge of State and local laws and regulations which pertain to explosives.

(d) Blasters shall be required to furnish satisfactory evidence of competency in handling explosives and performing in a safe manner the type of blasting that will be required.

(e) The blaster shall be knowledgeable and competent in the use of each type of blasting method used.

Surface Transportation of Explosives 1926.902(b) and (l)

(b) Motor vehicles or conveyances transporting explosives shall only be driven by, and be in the charge of, a licensed driver who is physically fit. He shall be familiar with the local, State, and Federal regulation governing the transportation of explosives.

(l) Each vehicle used for transportation of explosives shall be equipped with a fully charged fire extinguisher, in good condition. An Underwriters Laboratory-approved extinguisher of not less than 10-ABC rating will meet the minimum requirement. The driver shall be trained in the use of the extinguisher on his vehicle.

Firing the Blast 1926.909(a)

(a) A code of blasting signals equivalent to Table U-1, shall be posted on one or more conspicuous places at the operation, and all employees shall be required to familiarize themselves with the code and conform to it. Danger signs shall be placed at suitable locations.

Table U-1
WARNING SIGNAL—A 1-minute series of long blasts 5 minutes prior to blast signal.
BLAST SIGNAL—A series of short blasts 1 minute prior to the shot.
ALL CLEAR SIGNAL—A prolonged blast following the inspection of blast area.

General Requirements (Power Transmission and Distribution) 1926.950(d)(1)(ii), (vi), and (vii)

(1) When deenergizing lines and equipment operated in excess of 600 volts, and the means of disconnecting from electric energy is not visibly open or visibly locked out, the provisions of subdivisions (i) through (vii) of this subparagraph shall be complied with:

(ii) Notification and assurance from the designated employee [a qualified person delegated to perform specific duties under the conditions existing] shall be obtained that:

(a) All switches and disconnectors through which electric energy may be supplied to the particular section of line or equipment to be worked have been deenergized;

(b) All switches and disconnectors are plainly tagged indicating that men are at work;

(c) And that where design of such switches and disconnectors permits, they have been rendered inoperable.

(vi) When more than one independent crew requires the same line or equipment to be deenergized, a prominent tag for each such independent crew shall be placed on the line or equipment by the designated employee in charge.

(vii) Upon completion of work on deenergized lines or equipment, each designated employee in charge shall determine that all employees in his crew are clear, that protective grounds installed by his crew have been removed, and he shall report to the designated authority that all tags protecting his crew may be removed.

1926.950(d)(2)(ii)

(2) When a crew working on a line or equipment can clearly see that the means of disconnecting from electric energy are visibly open or visibly locked-out, the provisions of subdivisions (i) and (ii) of this paragraph shall apply:

	(ii) Upon completion of work on deenergized lines or equipment, each designated employee in charge shall determine that all employees in his crew are clear, that protective grounds installed by his crew have been removed, and he shall report to the designated authority that all tags protecting his crew may be removed.
1926.950(e)(1) and (2)	(1) The employer shall provide training or require that his employees are knowledgeable and proficient in: (i) Procedures involving emergency situations, and (ii) First-aid fundamentals including resuscitation. (2) In lieu of subparagraph (1) of this paragraph the employer may comply with the provisions of § 1926.50(c) regarding first-aid requirements.
Overhead Cranes 1926.955(b)(3)(i)	(3)(i) A designated employee shall be used in directing mobile equipment adjacent to footing excavations.
1926.955(b)(8) and (d)(i)	(8) A designated employee shall be utilized to determine that required clearance is maintained in moving equipment under or near energized lines. (1) Prior to stringing parallel to an existing energized transmission line a competent determination shall be made to ascertain whether dangerous induced voltage buildups will occur, particularly during switching and ground fault conditions. When there is a possibility that such dangerous induced voltage may exist the employer shall comply with the provisions of subparagraphs (2) through (9) of this paragraph in addition to the provisions of paragraph (c) of this § 1926.955, unless the line is worked as energized.
1926.955(e)(1) and (4)	(1) Employees shall be instructed and trained in the live-line bare-hand technique and the safety requirements pertinent thereto before being permitted to use the technique on energized circuits. (4) All work shall be personally supervised by a person trained and qualified to perform live-line bare-hand work.
Underground Lines 1926.956(b)(1)	(1) While work is being performed in manholes, an employee shall be available in the immediate vicinity to render emergency assistance as may be required. This shall not preclude the employee in the immediate vicinity from occasionally entering a manhole to provide assistance, other than emergency. This requirement does not preclude a qualified employee [a person who by reason of experience or training is familiar with the operation to be performed and the hazards involved], working alone, from entering for brief periods of time, a manhole where energized cables or equipment are in service, for the purpose of inspection, housekeeping, taking readings, or similar work if such work can be performed safely.
Construction in Energized Substations 1926.957(a)(1)	(1) When construction work is performed in an energized substation, authorization shall be obtained from the designated, authorized person [a qualified person delegated to perform specific duties under the conditions existing] before work is started.
1926.957(d)(1)	(1) Work on or adjacent to energized control panels shall be performed by designated employees.
1926.957(e)(1)	(1) Use of vehicles, gin poles, cranes, and other equipment in restricted or hazardous areas shall at all times be controlled by designated employees.
Ladders 1926.1053(b)(15)	(15) Ladders shall be inspected by a competent person for visible defects on a periodic basis and after any occurrence that could affect their safe use.
1926.1060	The following training provisions clarify the requirements of § 1926.21(b)(2), regarding the hazards addressed in subpart X. (a) The employer shall provide a training program for each employee using ladders and stairways, as necessary. The program shall enable each employee to recognize hazards related to ladders and stairways, and shall train each employee in the procedures to be followed to minimize these hazards. (1) The employer shall ensure that each employee has been trained by a competent person in the following areas, as applicable: (i) The nature of fall hazards in the work area;

(ii) The correct procedures for erecting, maintaining, and disassembling the fall protection systems to be used;

(iii) The proper construction, use, placement, and care in handling of all stairways and ladders;

(iv) The maximum intended load-carrying capacities of ladders used; and

(v) The standards contained in this subpart.

(b) Retraining shall be provided for each employee as necessary so that the employee maintains the understanding and knowledge acquired through compliance with this section.

****

This document has been reprinted by MCISC to help contractors meet OSHA Training requirements. OSHA places heavy emphasis on training as a tool to reduce construction accident rates. Failure to train is one of the most frequently cited OSHA Standards. It is a safe bet that any new standards OSHA releases will contain specific training requirements.

Your company should review its activities to find out where training is required. Tool box talks and company safety meetings should cover these areas first. In many cases, MCISC can help with our videos and prepared presentations. If our schedule permits, we will even put on programs for you.

Needless to say, the OSHA list is not all inclusive and safety training and education must go beyond these minimums. Training is the only way we can reduce our industry's accident rate.

****

CONSTRUCTION NOISES AND LEVELS

SOUND PRESSURE LEVEL (DB)	SOURCE OR EFFECT OF NOISE
114-139	Power-actuated tools (such as those for setting fasteners into concrete
114-118	Hard rock drilling as in tunnel excavation
105-125	Riveting tools used on metal plates
98-100	Heavy truck cab
95-105	Crawler tractor
95-102	Front end loaders
90-120	Earth moving equipment
90-115	Power shovel cab
87- 89	Diesel air compressor
85- 98	Graders
65-105	Welding Equipment

RECORDKEEPING REQUIREMENT FOR CONSTRUCTION

1. OSHA 200 logs - 5 years plus current
2. OSHA 101 or equivalent
3. Annual crane inspection records.
4. Crane load chart
5. Personnel platform engineering drawings and proof test record
6. Custom made rigging devices engineering drawings and proof test record
7. Concrete test records
8. Concrete form diagrams
9. Insurance company audits
10. Minutes of safety minutes
11. Safety program
12. Accident investigation records
13. List of Hazardous chemicals onsite
14. Written hazard communication program
15. Written respirator program
16. Records of sampling for asbestos, silica, and other chemicals
17. OSHA Poster
18. Access to Medical record statement posted
19. Material Safety Data Sheets
20. Confined Space Entry Program
21. Lockout/Tagout Program
22. Record of hydrostatic testing of fire extinguishers
23. Explosives inventory
24. Assured Equipment grounding program
25. Record of air quality test for tunnels, confined spaces

26. Hot work permit program

27. Emergency action plan

TYPE "A" SOIL

Type "A" means cohesive soil with an unconfined compressive strength of 1.5 tons per square foot (tsf) or greater, or cemented granular soil such as hardpan, till, or caliche, except that no soil is Type A if:

- The soil is fissured; or
- The soil is subject to vibration from heavy traffic, pile driving, or similar effects; or
- The soil has been previously disturbed; or
- The soil is part of a sloped,layered system where the layers dip into the excavation on a slope of four horizontal to one vertical (4H:IV) or greater; or
- The material is subject to other factors that would require it to be classified as a less stable material.

TYPE "B" SOIL

Type "B" means:

- Cohesive soil with an unconfined compressive strength greater than 0.5 tsf but less than 1.5 tsf; or

- Granular soil that can stand on a slope of three horizontal to one vertical (3H:IV) or greater without slumping; or

- Soil that meets the unconfined compressive strength or cementation requirements for Type A, but is fissured, subject to vibration, or has previously been disturbed; and

- Dry rock that is not stable; and

- Material that is part of a sloped, layered system where the layers dip into the excavation on a slope less steep than four horizontal to one vertical (4H:IV), but only if type material would otherwise be classified as Type B.

TYPE "C" SOIL

Type "C" means:

- Cohesive soil with an unconfined compressive strength of 0.5 tsk or less; and

- Granular soil that cannot stand on a slope of three horizontal to one vertical (3H:IV) without slumping; and

- Saturated or submerged soil; and

- Submerged rock that is not stable; and

- Soil in a sloped, layered system where the layers dip into the excavation on a slope of four horizontal to one vertical (4H:IV) or greater.

OSHA SOIL CATEGORIES

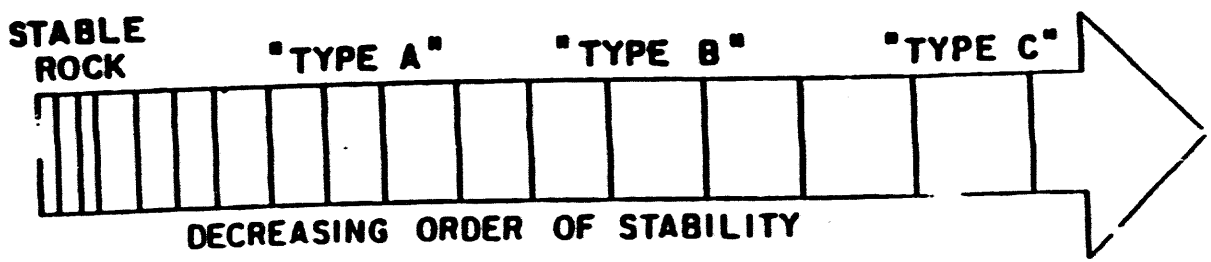

Subpart X

1926.1051

Ladders

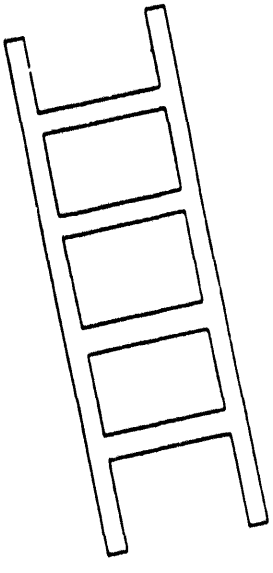

&

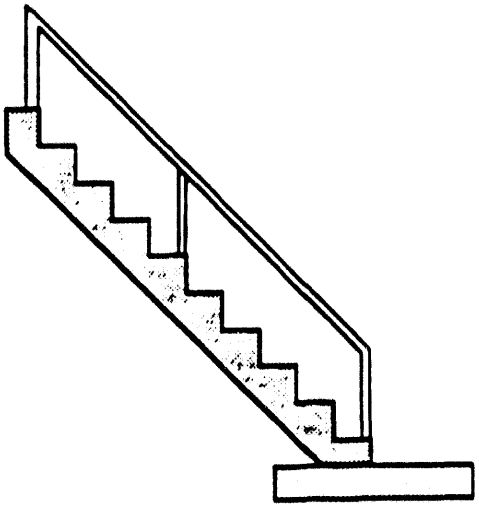

Stairways

General Requirements

Applies to Ladderways and Stairways
1926.1051

a.) Stairway/ladder needed when elevation changes by 19"

1) No temporary spiral stairs in construction
2) Two or more ladders or double cleated ladder needed with 25 employees or more
3) Keep access to ladder/ stairway clear
4) One access point shall be kept clear at all times

b.) Employers must provide safe ladderways/stairways prior to any other work at the elevated areas

General Requirements

Applies to Ladderways and Stairways
1926.1051

a) break in elevation of 19"

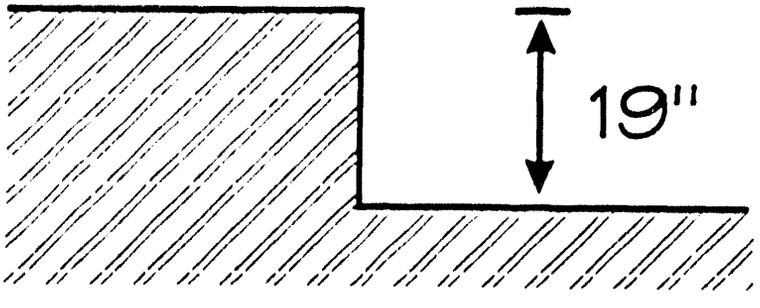

Do's and Don'ts

- Ladders shall not be tied or fastened together unless specifically designed (a)(7)

- Using 2 or more portable ladders to gain access, must have offset platform (a)(10)

- Don't varnish wood ladders (a)(12)

1052 a)

1.) Temporary stairway landings

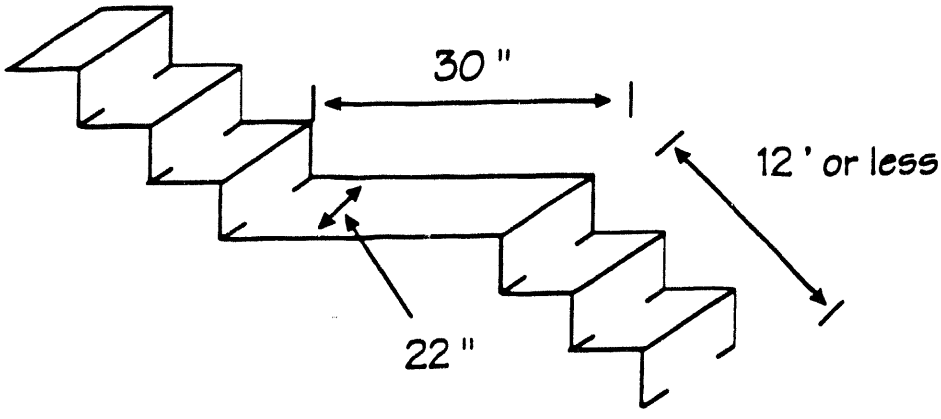

2) Installed between 30°-50° horizontal

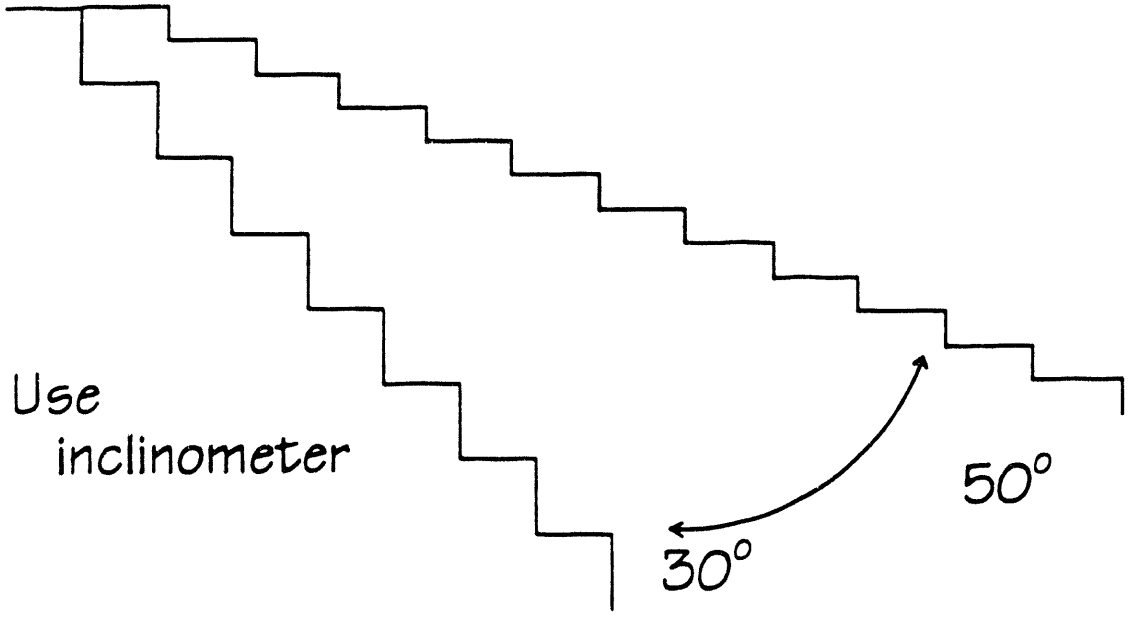

1052 a)

4) Platform constructed to 20"
beyond door/gate swing radius

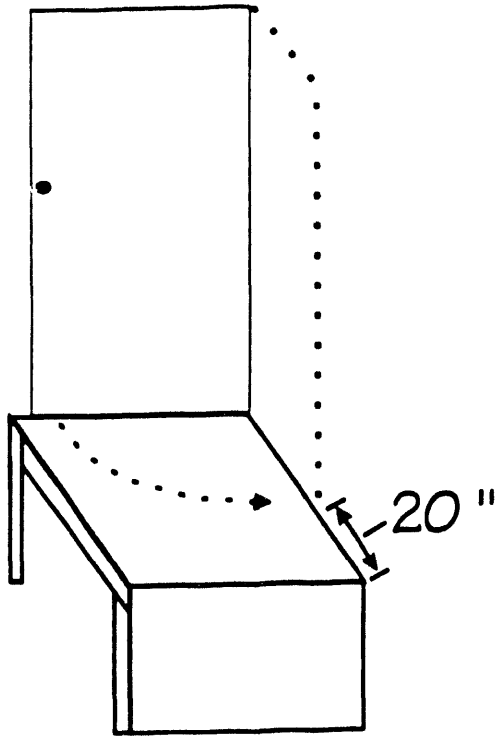

5.) Secure from movement, all metal pan stairs/landings prior to filling with materials

6.) All parts of stairway, free of obstructions, projections.

7.) Eliminate slippery conditions before use.

SNOW Grease ICE OIL

1052

b) 1) Pan tread/stairs/landings shall be filled

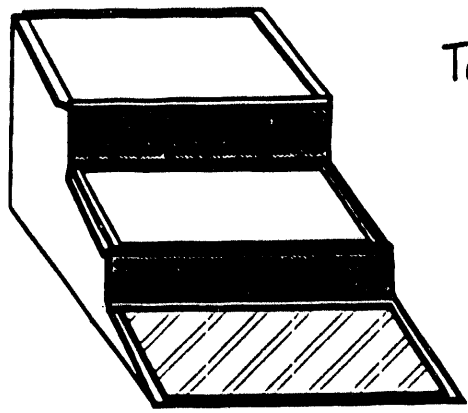

Temporary service

2.) No foot on skelton metal stairs unless temporary treads installed

3.) Temporary treads made of solid material & full width & depths of stairs

C.)

1)

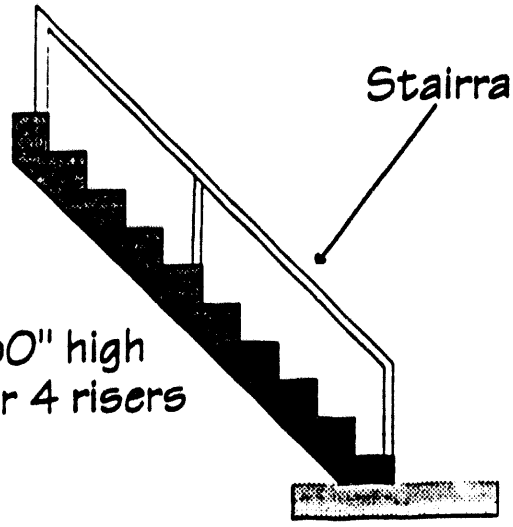

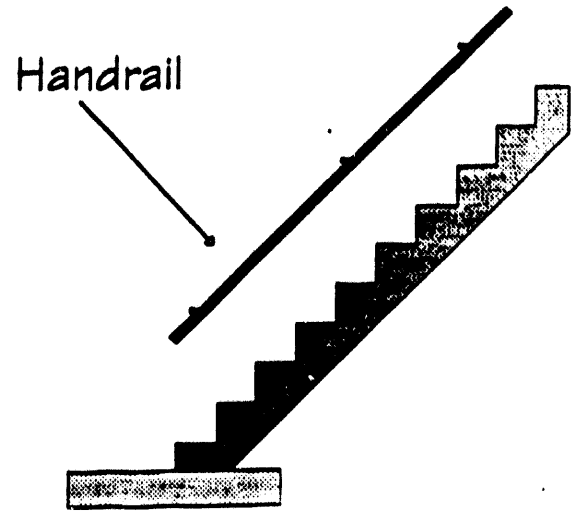

2) Spiral Stairs

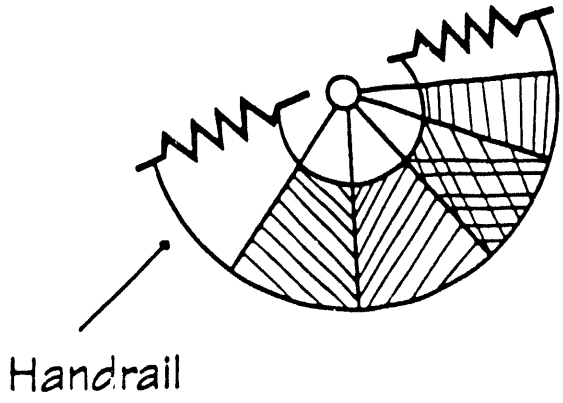

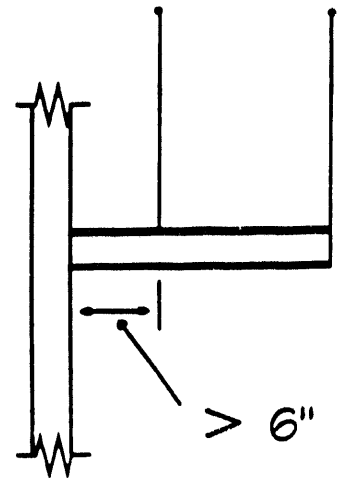

3) Height of Stairrails

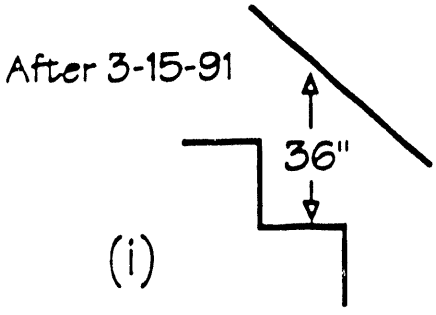

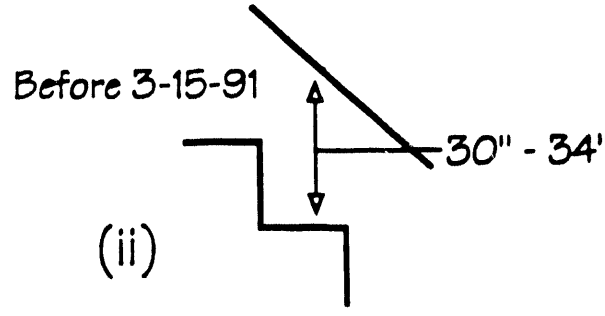

C.)

4.) On open side of stairs-
screens, mesh, vertical members, horizontal members,

i.) midrail (horizontal members)

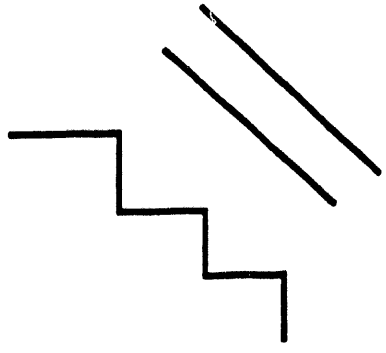

Located midway between

ii) screen/mesh

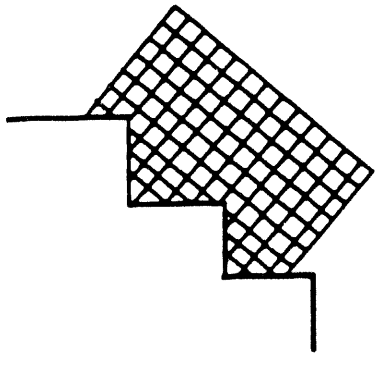

iii) vertical members

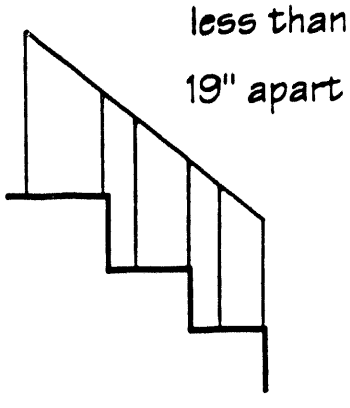

iv) other equivalent means
no openings larger than 19"

C.) 5.) Handrail are constructed to 200 lb. of out/down force.

6.) Handrail height 30"-37"

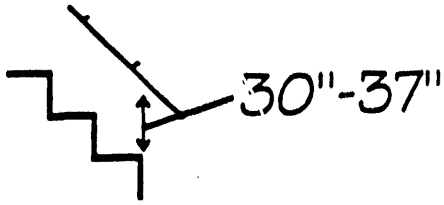

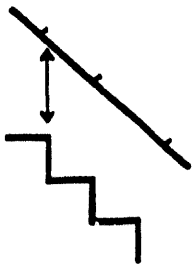

7.) Rail must start at Horizontal of upper stair

8.) Stair/handrails shall be so surfaced to prevent injury
- metal burrs, nails splinters, slag

9.) Rails must be adequate as a handhold

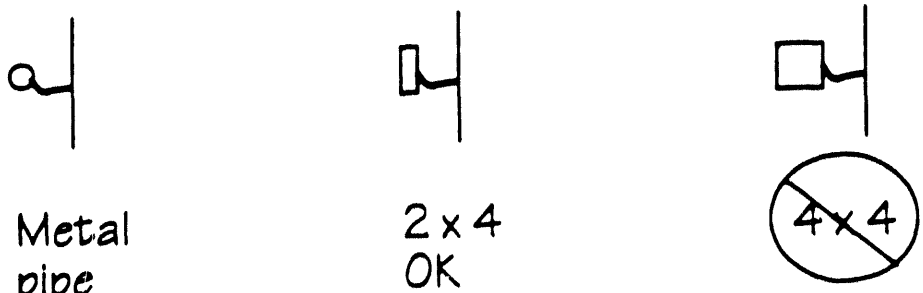

Metal pipe OK

2 x 4 OK

C. 10.) Rail end must not cause a projection hazard

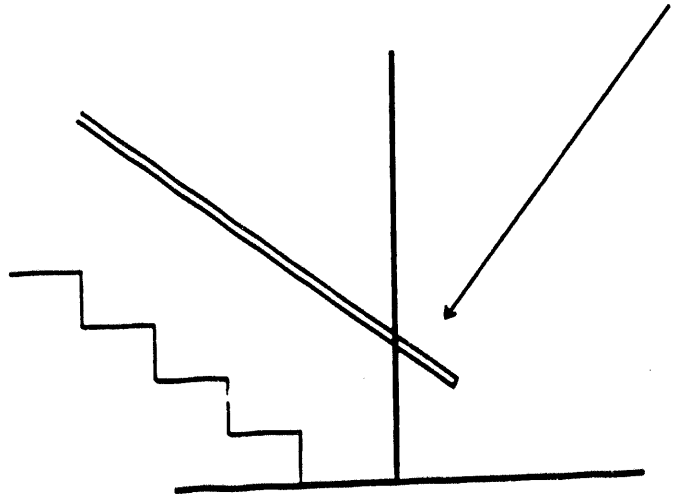

11.) Minimum handrail construction distance

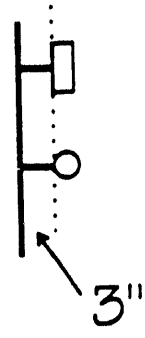

12.) Stairway landings must be guarded

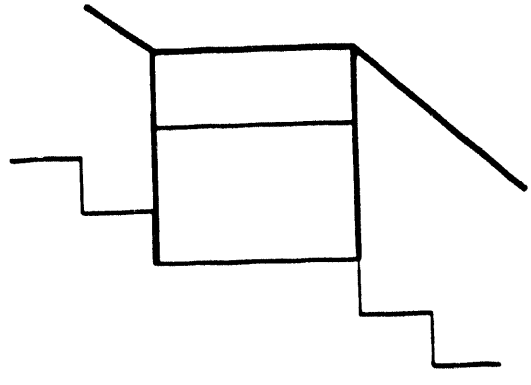

FALL PROTECTION

0"	FLOOR HOLE, FLOOR OPENING, WORKING OVER REBAR, WORKING OVER MACHINES
3"	WIRE ROPE GUARDRAIL DEFLECTION
19"	CHANGE OF ELEVATION WHEN LADDERS OR STAIRS NEEDED
3'	SIDE RAILS OF LADDERS EXTENDED
4'	SCAFFOLDS PLANKED LESS THAN 45", WALL OPENINGS
6'	OPEN SIDED FLOORS, TYING REBAR
8'	SPACING OF WOOD POST RAILS, SAFETY NETS EXTENDED OUTWARD
10'	FULLY PLANKED SCAFFOLDS, STORAGE OF MATERIALS ON THE EXTERIOR
16'	FLAT AND SLOPED ROOFS
20'	DEBRIS CHUTE, MAXIMUM HEIGHT OF A LADDERJACK SCAFFOLD
25'	FALLS INTO A NET, FALLS IN STEEL ERECTION, ONE EXCEPTION AT 30 FEET
30'	FALLS TO THE INTERIOR OF A TIERED BUILDING IN STEEL ERECTION WHERE ADAPTABLE TO TEMPORARY FLOORS

NO REGULATIONS FOR OVERHAND BRICKLAYING, AND SCAFFOLD ERECTION

Index of General Industry Standards
Applicable to Specific Construction Industry Standards

Current Standard	Applicable 1910 Standard	Current Standard	Applicable 1910 Standard
1926.16	1910.11 1910.12 1910.16 1910.19	1926.251(c)	1910.184(c)(2)(3) 1910.184(c)(5) 1910.184(c)(7) 1910.184(c)(10)(11)(12) 1926.184(f)(2)(3)(4)
1926.18	1910.132(b)(c) 1910.136	1926.251(d)	1910.184(h)(2) thru (5)
1926.51	1910.141(a)(1) 1910.141(a)(2)(v) 1910.141(a)(5) 1910.141(g)(2) 1910.141(h) 1910.151(e)	1926.251(e)	1910.184(h)(2)(3) & (4) 1910.184(i)(6) & (7) 1910.184(i)(9)
1926.55	1910.161(a)(2)	1926.300	1910.212(a)(3) 1910.212(a)(5) 1910.212(b)
1926.103	1910.94(a)(1)(ii) 1910.94(a)(5)(i) 1910.94(a)(5)(ii)(b) 1910.94(a)(8) 1910.134	1926.302	1910.244(b)
1926.152	1910.106(a)(22) 1910.106(g)(1)(i)(g) 1910.106(g)(4) 1910.106(j)(1)(2)	1926.305	1910.244(a)(2)(iii-viii)
1926.153	1910.110(a)(1)(2) 1910.110(a)(4) 1910.110(a)(5)(iii) 1910.110(d)(1)(2) 1910>110(d)(7)(vii)(vi) 1910.110(d)(10)	1926.451	1910.21(g)(9) 1910.28(a)(15) 1910.28(a)(18) 1910.28(a)(20) 1910.29(a) 1910.29(c)
1926.250	1910.30(a)(1)(2) 1910.30(a)(4)(5) 1910.176(c)	1926.500	1910.21(a)(10) 1910.23(b)(5) 1910.169
1926.251	1910.184(a)	1910.600	1910.160 1910.176(f)
1926.251(b)	1910.184(e)(3)(i) & (ii)	1910.900	1910.109(g)(2)(ii) 1910.109(h)(3)(ii)
		1910.905	1910.109(e)(3)(iii) 1910.109(a)(12)

Supplement 1
Text of Other OSHA Standards Incorporated by Reference
In Those Part 1910 Standards Identified as Applicable to Construction

Safety Standards

1910.23(e)(11)	Wall opening screen
1910.106(b)	Tank storage
1910.106(c)	Piping, valves and fittings
1910.110(b)	Basic Rules (LPG)
1910.184(d)	Inspections (slings)

Health Standards

1910.6	Incorporated by reference
1910.100	Standards organizations
1910.133	Eye and face protection
1910.135	Occupational head protection
1910.136	Occupational foot protection
1910.141(d)(1)(2)(3)	Washing facilities
1910.141(e)	Change rooms
1910.145(d)(4)	Caution signs
1910.1018	Inorganic arsenic
1910.1029	Coke oven emissions
1910.1043	Cotton dust
1910.1044	1,2-Dibromo-3-Chloropropane
1910.1045	Acrylonitrile

Standards Incorporated by Reference into 29 CFR 1926

SUBPART	SECTION	STANDARD	INCORPORATED BY REF
C	.30	Shipbuilding and Ship Repairing	29 CFR 1915 Ship Repairing, 29 CFR 1916 Shipbuilding
D	.56	Illumination	ANSI A11.1-1965, R 1970
E	.100	Head Protection	ANSI Z89.1 - 1969 ANSI Z89.2 - 1971
E	.104	Safety Belts, Lifelines, Lanyards	Federal Specification QQ-P-416 (Type I, Class B)
F	.150	Fire Protection	NFPA No. 10A-1970 Maintenance and Use of Portable Fire Extinguisher
F	.152	Flammable and Combustible Liquids	NFPA No. 251-1969 Standard Methods of Fire Test of Building Construction & Material NFPA No. 80-1970 Standard for Fire Doors and windows NFPA No. 30-1969 Flammable and Combustible Liquids Code NFPA No. 13-1969 Standards for the Installation of Sprinkler Systems NFPA No. 385-1966 Standards for Tank Vehicles for Flammable and Combustible Liquids
F	.153	Liquified Petroleum Gas	49 CFR Part 178 Shipping Container Specifications
G	.200	Liquified Petroleum Gas	ANSI D6.1-1971 Manual on Uniform Traffic Control Devices and Equipment ANSI Z35.1-1968 Specifications for Accident Prevention Signs ANSI Z35.2-1968 Specifications for Accident Prevention Tags
G	.201	Liquified Petroleum Gas	ANSI D6.1-1971 Manual on Uniform Traffic Control Devices and Equipment
I	.300	Liquified Petroleum Gas	ANSI B15.1-1953 Safety Code for Mechanical Power (Revision 1958) Transmission Apparatus
I	.302	Power Operated Hand Tools	Schedule 30; U.S. Bureau of Mines ANSI A10.3-1970 Safety Requirements for Explosive-Actuated Fastening Tools
I	.303	Abrasive Wheels and Tools	ANSI B7.1-1970 Safety Code for the Use, Care and Protection of Abrasive Wheels
I	304	Woodworking Tools	ANSI 01.1-61 Safety Code for Woodworking Machinery
J	.350	Gas Welding and Cutting	49 CFR Part 178 (Subpart C) Specifications for Cylinders ANSI Z49.1-1967 Safety in Welding and Cutting NEC Article 630, NFPA 70-1971 ANSI C-1-1971 (Revision 1968) Electrical Welders

J	.351	Arc Welding and Cutting	DOT 49 CFR 192 Minimum Federal Safety Standards for Gas Pipelines
J	.352	Fire Prevention	49 CFR Part 192 Minimum Federal Safety Standards for Gas Pipelines
K	.407	Hazardous (Classified Locations)	NEC, NFPA 70
N	.550	Cranes and Derricks	ANSI B30.5-1968 Safety Code for Crawler, Locomotive or SAE J959-1966 and Truck Cranes ANSI B15.1-1958 (Revision) Safety Code for Mechanical Power Transmission Apparatus 49 CFR 177 and 393 SAE J743 PCSA No. 2 Crane and Shovel Association Mobile Hydraulic Crane Standard ANSI B30.6-1969 Safety Code for Derricks ANSI B30.2-1967 Safety Code for Overhead and Gantry Cranes
N	.552	Material Hoists, Personnel Hoists and Elevators	ANSI A10.5-1969 Safety Requirements for Material Hoists ANSI A10.4-1963 Safety Requirements for Workmen's Hoists ANSI A17.1-1965 A17.1a-1967;A17.1b-1968 A17.1c-1969;A17.1d-1970 A17.2-1960;A17.2a-1965 A17.2-1967 Permanent Elevators ANSI B20.1-1957 Safety Code for Conveyors, Cableways, and Related Equipment
N	.556	Aerial Lifts	ANSI A92.2-1969 Vehicle Mounted Elevating and Rotating Work Platforms
O	601	Aerial Lifts	49 CFR Part 571 (Department of Transportation Federal Motor Vehicle Safety Standards)
O	602	Aerial Lifts	SAE J386-1969 Seat Belts for Construction Equipment SAE J333a-1970 Operator Protection for Agricultural and Light Industrial Tractors SAE J237-1971 Loader Dozer SAE J236-1971 Graders SAE J319b-1971 Scrapers SAE J166-1972 Trucks SAE J231a-1970 Fenders for Pneumatic Tired Earthmoving Haulage Equipment PCSA No 1, 2, 3 Power Hoist and Crane Associations Standards No. 1 and No. 2-1968, No. 3-1969 ANSI B56.1-1969 Safety Standards for Powered Industrial Trucks
O	603	Pile Driving Equipment	ASME Power Boilers (Section I) ASME Pressure Vessels (Section VII)
O	605	Pile Driving Equipment	29 CFR 1918 Safety and Health Regulations for Longshoring

U	.902	Pile Driving Equipment	14 CFR 103 Air Transportation 46 CFR 146-149 Water Carriers 49 CFR 171-179 Highways an Railways 49 CFR 180 Pipelines 49 CFR 390-397 Motor Carriers 26 CFR 181 IRS Storage or Explosives and Blasting Agents 26 CFR 181 Commerce in Explosives
V	.951	Tools and Equipment	ANSI J6.6-1971 Rubber Insulating Gloves ANSI J6.7-1935 (Revision 1971) Rubber Matting for Use Around Electric Apparatus ANSI J6.4-1971 Rubber Insulating Blankets ANSI J6.2-1950 (Revision 1971) Rubber Insulating Hoods ANSI J6.1-1950 (Revision 1971) Rubber Insulating Line Hose ANSI J6.5-1971 Rubber Insulating Sleeves ANSI Z89.2-1971 Industrial Protective Helmets for Electrical Workers (Class B)
W	.1002	Protective Frame (ROPS)-for Wheel-type Agricultural and Industrial Tractors Used in Construction	SAE J168 Protective Enclosures, Test (July 1970) Procedures, and Performance Requirements

DOE ACCIDENT/INJURY/ILLNESS REPORTING SYSTEM

PURPOSE

The purpose of this lesson is to provide an overview of the DOE Accident/Injury/Illness Reporting System

OBJECTIVES

1. Given examples of work injuries and illnesses, determine whether they are recordable
2. Given sample accident/injury data, calculate incidence rates.

REFERENCES

1. 29 CFR 1910 Occupational Safety and Health Standards for General Industry, United States Department of Labor.
2. 29 CFR 1960 Basic Program Elements for Federal Employee Occupational Safety and Health Programs and Related Matters.
3. 29 CFR 1904.
4. DOE Order 5484.1 Information Regulations.
5. U.S. DOL pamphlet 1220-0029 Recordkeeping Guidelines for Occupational Injuries & Illnesses: Bureau of Labor & Statistics 1986.

DURATION

One hour & 30 minutes

INSTRUCTOR MATERIALS

Course manual with instructors notes.

Injury/Illness Reporting System

Objectives

1. Given examples of work injuries and illnesses, determine whether they are recordable.
2. Given sample accident/injury data, calculate incidence rates.

29 CFR 1904

- This part of the code addresses "Recording and Reporting Occupational Injuries and Illnesses"
- Recordkeeping is required to assist in the prevention of accidents and illnesses.

Recordkeeping and Reporting Requirements of Federal Agencies

29 CFR 1960 Subpart I Sections .66 - .74

"...to establish uniform requirements for the collection and compilation by agencies of occupational safety and health data, for proper evaluation and necessary corrective action..."

"...to identify unsafe and unhealthful working conditions, and to establish program priorities."

Recordkeeping and Reporting Requirements for GOCOs

- DOE Order 5484.1
  - Details reporting requirements under SPMS; SSDC
- Transition period began 1989-GOCOs will use 29 CFR 1904 and the BLS 1220 guidelines
- DOE Order 5483.XX-proposed changes to include recordkeeping

Proposed DOE Order 5483.XX

- Provisions of the Order
  - Personnel injury and illness files shall be maintained permanently
  - Identifies forms
    - 5484.X-Individual Accident/Incident Report
    - 5484.Y-Work Hours, Vehicle Usage, Property Valuation
    - OSHA 200 log
  - Posted completion summary

5483.XX Injury and Illness Data

- SSDC-System Safety Development Center
- SPMS-Safety performance Measurement System
- Review and analyze data to identify and plan amelioration for adverse trends.
  - safety goals and objectives
  - evaluation of programs

Definition of Injury

- Injury (traumatic)—A wound or other condition of the body caused by external force, including stress or strain. The injury is identifiable as to time and place of occurrence and member or function of the body affected, and is caused by a specific event or incident or series of events or incidents within a single day or work shift.

Definition of Illness

- Illness/disease (occupational)—A physiological harm or loss of capacity produced by systemic infection; continued or repeated stress or strain; exposure to toxins, poisons, fumes, etc.; or other continued and repeated exposures to conditions of the work environment over a long period of time.

Definition of Recordable Case

- A "recordable case" is every occupational death; every nonfatal occupational illness and those nonfatal occupational injuries which involve one or more of the following: loss of consciousness, restriction of work or motion, transfer to another job, or medical treatment (other than first aid).

Occupational Illness

- Categories to classify recordable occupational illnesses on the log:
  - occupational skin diseases
  - dust diseases of the lung
  - respiratory conditions
  - poisoning
  - physical agents
  - repeated trauma

Summary of Recordable Incidents

- All work-related fatalities and illnesses are recordable
- The following work-related injuries are recordable:
  - loss of consciousness
  - restriction of work or motion
  - transfer to another job
  - days away other than day of injury
  - medical treatment other than first aid

Form OSHA-200

- 1904.2
  - The OSHA 200 log is used for recording and classifying occupational injuries and illnesses and for noting the extent of each
  - The log includes 3 parts:
    - a descriptive section which identifies the employee and the injury or illness
    - a section covering the extent of the recorded injury
    - a section on the type and extent of illness

Form OSHA 200

- This form shall be completed for DOE contractor employees.
  - when and to whom the incident occurred
  - the regular job of the injured or ill person at the time of the incident
  - the kind of injury or illness
  - how much time was lost

Incidence Rate

Incidence rate

$$\frac{(\text{\# of recordable illness and injury})\ (200{,}000)}{(\text{\# of employee hours worked})}$$

Cost Data

- Estimated material cost—work in progress, equipment
- Wages of injured parties—absent
- Wages of supervisors—time lost during accident and investigation
- Training cost of substitute workers
- Liability
- Medical costs not covered by compensation

U.S. Department of Labor
Program Highlights

Fact Sheet No. OSHA-86-07 (Revised) October, 1986

Improving Workplace Protections for
NEW WORKERS

NEW WORKER, HIGH RISK!

If you are new at your job, your risk of injury is much higher than for your more experienced co-workers. In fact, the Bureau of Labor Statistics reports that in 1979, 48% of workers injured had been on the job less than one year.

Why are new workers more likely to be hurt? BLS studies show that employees injured at work often lack one vital tool to protect themselves: information. Take a look at the following data gathered by BLS in various surveys:

-- of 724 workers hurt while using scaffolds, 27% said they received no information on safety requirements for installing the kind of scaffold on which they were injured.

-- of 868 workers who suffered head injuries, 71% said they had no instruction concerning hard hats.

-- of 554 workers hurt while servicing equipment, 61% said they were not informed about lockout procedures.

In nearly every type of injury BLS researchers have studied, the same story is repeated over and over. Workers often do not receive the safety information they need--even on jobs involving dangerous equipment where training is clearly essential. In one BLS study of workers injured while operating power saws, nearly one of every five said no safety training on the equipment had been provided.

This problem deserves immediate attention from both the federal and private sectors. The Occupational Safety and Health Administration wants to work with workers, employers, and vocational schools to increase protections for new employees.

WHAT WORKERS CAN DO

-- Be sure you understand all necessary safety measures before you start to work. If the explanantion is unclear, ask again.

-- Use what you learn--all the time.

-- If respirators or other personal protective equipment are required, wear them consistently and maintain them properly. If guards are required on equipment, make sure they are in place.

-- Don't take short-cuts; follow safety and health instructions to the letter.

-- If you work at a worksite where toxic substances may be in use, the National Institute for Occupational Safety and Health--OSHA's companion research agency--suggests you ask the following questions:

1) Are any substances used in this plant known to be harmful?

This is one of a series of fact sheets highlighting U.S. Department of Labor programs. It is intended as a general description only and does not carry the force of legal opinion.

2) Are trade name products used without full knowledge of what is in them?

3) Does the job require contact with mists, vapors, dusts, gases, or fumes that are potentially harmful?

-- If you need help in finding out whether a chemical can be harmful, call your nearest OSHA area office, NIOSH's Technical Information Branch at (513) 523-8328 or OSHA's Technical Data Center at (202) 523-9700.

WHAT EMPLOYERS CAN DO

-- Make safety training an essential part of plant routine. OSHA standards require safety training for workers in many types of hazardous work. A comprehensive safety training program will assure compliance and can also pay off in reduced absenteeism, lower compensation costs, and increased efficiency.

-- Use the free, penalty-free consultation service available in nearly every state; consultants can help you design an effective safety program.

WHAT OSHA CAN DO

Safety and health experts are available at every state and federal OSHA office to answer questions from workers and employers. Don't know where the closest OSHA office is? Call an OSHA Regional Office listed under "U.S. Labor Department" in phone directories for Boston, New York, Philadelphia, Atlanta, Chicago, Kansas City, Dallas, Denver, San Francisco, and Seattle. These offices can also refer you to the free on-site consultation service in your area.

-- OSHA Publications and Audiovisual Materials. This catalog is available from the OSHA Publications Office, Room S-4203, Washington, D. C. 20210 ((202) 523-9655). Listings include:

-- Principles and Practices of Occupational Safety and Health
This six-part self-study program is designed to help first-line supervisors to identify and correct workplace hazards. The total cost of the program is $29.25, although each component must be purchased separately from the Superintendent of Documents, Government Printing Office, Washington, D.C. 20402 ((202) 783-3238).

-- A Resource Guide to Worker Education Materials in Occupational Safety and Health. This 228-page book lists training materials and publications on safety and health available from selected public and private organizations. It costs $7.00 and must be purchased from the Superintendent of Documents, Government Printing Office, Washington, D.C. 20402 ((202) 783-3238).

-- OSHA's Training Institute, 1555 Times Dr., Des Plaines, IL 60018 ((312) 297-4810) offers courses open to the public on safety and health in general industry and in construction. The week-long courses are tuition-free, although participants must register in advance and pay their own travel and expenses. The Training Institute also sponsors regional safety and health training sessions around the country. Call or write to find out about upcoming seminars, course offerings, and openings.

WHAT VOCATIONAL SCHOOLS CAN DO

OSHA has called upon vocational schools to increase awareness of job safety and health among their students who will soon be entering the workforce. The agency has endorsed 45 vocational safety and health training programs developed by and available for purchase from the Center for Occupational Research and Development, 601C Lake Air Dr., Waco, TX 76710 ((817) 772-8756).

######

Bureau of Labor Statistics
Supplementary Record of
Occupational Injuries and Illnesses

U.S. Department of Labor

This form is required by Public Law 91-596 and must be kept in the establishment for 5 years. Failure to maintain can result in the issuance of citations and assessment of penalties.

Case or File No. 0-1

Form Approved
O.M.B. No. 1220-0029

1. Name
Cornell Tank and Valve Co.

2. Mail address (No. and street, city or town, State, and zip code)
2121 Oak Ave., Seattle, WA 98000

3. Location, if different from mail address

Injured or Ill Employee

4. Name (First, middle, and last)
Joseph Zerr

Social Security No. 6 3 5 2 2 0 0 1 9

5. Home address (No. and street, city or town, State, and zip code)
8326 Moribund Ave., Fife, WA 98002

6. Age 43

7. Sex: (Check one) Male [XX] Female [ ]

8. Occupation (Enter regular job title, not the specific activity he was performing at time of injury.)
Construction worker

9. Department (Enter name of department or division in which the injured person is regularly employed, even though he may have been temporarily working in another department at the time of injury.)
Plant Services

The Accident or Exposure to Occupational Illness

If accident or exposure occurred on employer's premises, give address of plant or establishment in which it occurred. Do not indicate department or division within the plant or establishment. If accident occurred outside employer's premises at an identifiable address, give that address. If it occurred on a public highway or at any other place which cannot be identified by number and street, please provide place references locating the place of injury as accurately as possible.

10. Place of accident or exposure (No. and street, city or town, State, and zip code)
Cornell Tank and Valve Co, 2121 Oak Ave., Seattle, WA 98000

Was place of accident or exposure on employer's premises? Yes [XX] No [ ]

12. What was the employee doing when injured? (Be specific. If he was using tools or equipment or handling material, name them and tell what he was doing with them.)
Loading 40 to 50 eighty pound sacks of sand, lifting them overhead

13. How did the accident occur? (Describe fully the events which resulted in the injury or occupational illness. Tell what happened and how it happened. Name any objects or substances involved and tell how they were involved. Give full details on all factors which led or contributed to the accident. Use separate sheet for additional space.)
Twisted while holding sack, felt pain in lower back

Occupational Injury or Occupational Illness

14. Describe the injury or illness in detail and indicate the part of body affected. (E.g., amputation of right index finger at second joint; fracture of ribs; lead poisoning, dermatitis of left hand, etc.)
Back (lower)

15. Name the object or substance which directly injured the employee. (For example, the machine or thing he struck against or which struck him; the vapor or poison he inhaled or swallowed; the chemical or radiation which irritated his skin; or in cases of strains, hernias, etc., the thing he was lifting, pulling, etc.)
Twisted body while lifting 80 lb. sack of sand

16. Date of injury or initial diagnosis of occupational illness 3/3/86

17. Did employee die? (Check one) Yes [ ] No [XX]

Other

18. Name and address of physician

If hospitalized, name and address of hospital

Date of report 3/4/86

Prepared by Roberta Smith

Official position Nurse

OSHA No. 101 (Feb. 1981)

Given Hydro-therapy NTL

Bureau of Labor Statistics
Supplementary Record of
Occupational Injuries and Illnesses

U.S. Department of Labor

This form is required by Public Law 91-596 and must be kept in the establishment for 5 years. Failure to maintain can result in the issuance of citations and assessment of penalties.

Case or File No. 0-2

Form Approved O.M.B. No. 1220 0029

Employer

1. Name
Cornell Tank and Valve Co.

2. Mail address (No. and street, city or town, State, and zip code)
2121 Oak Ave., Seattle, WA 98000

3. Location, if different from mail address

Injured or Ill Employee

4. Name (First, middle, and last)
Richard Weeks

Social Security No. 6 3 5 2 2 0 0 1 9

5. Home address (No. and street, city or town, State, and zip code)
8326 Moribund Ave., Fife, WA 98002

6. Age 36

7. Sex: (Check one) Male [X] Female [ ]

8. Occupation (Enter regular job title, not the specific activity he was performing at time of injury.)
Mechanic

9. Department (Enter name of department or division in which the injured person is regularly employed, even though he may have been temporarily working in another department at the time of injury.)
Tank Fab & Assembly

The Accident or Exposure to Occupational Illness

If accident or exposure occurred on employer's premises, give address of plant or establishment in which it occurred. Do not indicate department or division within the plant or establishment. If accident occurred outside employer's premises at an identifiable address, give that address. If it occurred on a public highway or at any other place which cannot be identified by number and street, please provide place references locating the place of injury as accurately as possible.

10. Place of accident or exposure (No. and street, city or town, State, and zip code)
Cornell Tank and Valve Co, 2121 Oak Ave., Seattle, WA 98000

11. Was place of accident or exposure on employer's premises? Yes [XX] No [ ]

What was the employee doing when injured? (Be specific. If he was using tools or equipment or handling material, name them and tell what he was doing with them.) Loading boards

13. How did the accident occur? (Describe fully the events which resulted in the injury or occupational illness. Tell what happened and how it happened. Name any objects or substances involved and tell how they were involved. Give full details on all factors which led or contributed to the accident. Use separate sheet for additional space.)
Dropped a board on his toe. Not wearing safety shoes.

Occupational Injury or Occupational Illness

14. Describe the injury or illness in detail and indicate the part of body affected. (E.g., amputation of right index finger at second joint; fracture of ribs; lead poisoning, dermatitis of left hand, etc.) Toe

15. Name the object or substance which directly injured the employee. (For example, the machine or thing he struck against or which struck him; the vapor or poison he inhaled or swallowed; the chemical or radiation which irritated his skin; or in cases of strains, hernias, etc., the thing he was lifting, pulling, etc.) Board

16. Date of injury or initial diagnosis of occupational illness 3/4/86

17. Did employee die? (Check one) Yes [ ] No [XX]

Other

18. Name and address of physician

19. If hospitalized, name and address of hospital

Date of report 3/4/86

Prepared by Roberta Smith

Official position Nurse

OSHA No. 101 (Feb. 1981)

5 days lost

ureau of Labor Statistics
upplementary Record of
ccupational Injuries and Illnesses

U.S. Department of Labor

is form is required by Public Law 91-596 and must be kept in the establishment for 5 years. ailure to maintain can result in the issuance of citations and assessment of penalties.

Case or File No. 0-3

Form Approved O.M.B No 1220 0029

Cornell Tank and Valve Co.

2. Mail address *(No. and street, city or town, State, and zip code)*
2121 Oak Ave., Seattle, WA 98000

3. Location, if different from mail address

jured or Ill Employee

4. Name *(First, middle, and last)* Edward Peterson

Social Security No. 6 3 5 2 2 0 0 1 9

5. Home address *(No. and street, city or town, State, and zip code)*
8326 Moribund Ave., Fife, WA 98002

6. Age 50

7. Sex: *(Check one)* Male [X] Female [ ]

8. Occupation *(Enter regular job title, not the specific activity he was performing at time of injury.)*
Mechanic

9. Department *(Enter name of department or division in which the injured person is regularly employed, even though he may have been temporarily working in another department at the time of injury.)*
Tank Fab & Assembly

he Accident or Exposure to Occupational Illness

If accident or exposure occurred on employer's premises, give address of plant or establishment in which it occurred. Do not indicate department or division within the plant or establishment. If accident occurred outside employer's premises at an identifiable address, give that address. If it occurred on a public highway or at any other place which cannot be identified by number and street, please provide place references locating the place of injury as accurately as possible.

10. Place of accident or exposure *(No. and street, city or town, State, and zip code)*
Cornell Tank and Valve Co, 2121 Oak Ave., Seattle, WA 98000

as place of accident or exposure on employer's premises? Yes [XX] No [ ]

was the employee doing when injured? *(Be specific. If he was using tools or equipment or handling material, name them and tell what he was g with them.)* Drilling

13. How did the accident occur? *(Describe fully the events which resulted in the injury or occupational illness. Tell what happened and how it happened. Name any objects or substances involved and tell how they were involved. Give full details on all factors which led or contributed to the accident. Use separate sheet for additional space.)* Piece of metal flew in left eye while drilling

Occupational Injury or Occupational Illness

14. Describe the injury or illness in detail and indicate the part of body affected. *(E.g., amputation of right index finger at second joint; fracture of ribs; lead poisoning; dermatitis of left hand, etc.)* Left eye

15. Name the object or substance which directly injured the employee. *(For example, the machine or thing he struck against or which struck him; the vapor or poison he inhaled or swallowed; the chemical or radiation which irritated his skin; or in cases of strains, hernias, etc., the thing he was lifting, pulling, etc.)* metal

16. Date of injury or initial diagnosis of occupational illness 3/6/86

17. Did employee die? *(Check one)* Yes [ ] No [XX]

Other

18. Name and address of physician

hospitalized, name and address of hospital

Date of report 3/6/86

Prepared by Roberta Smith

Official position Nurse

OSHA No. 101 (Feb. 1981)

Foreign body in left eye removed. NTL

Bureau of Labor Statistics
Supplementary Record of
Occupational Injuries and Illnesses

U.S. Department of Labor

This form is required by Public Law 91-596 and must be kept in the establishment for 5 years. Failure to maintain can result in the issuance of citations and assessment of penalties.

Case or File No. 0-4

Form Approved O.M.B. No. 1220-0029

Employer

1 Name
Cornell Tank and Valve Co.

2 Mail address (No. and street, city or town, State, and zip code)
2121 Oak Ave., Seattle, WA 98000

3 Location, if different from mail address

Injured or Ill Employee

4 Name (First, middle, and last)
Louis Akers

Social Security No. 6 3 5 2 2 0 0 1 9

5 Home address (No. and street, city or town, State, and zip code)
8326 Moribund Ave., Fife, WA 98002

6 Age 46

7. Sex. (Check one) Male [X] Female [ ]

8 Occupation (Enter regular job title, not the specific activity he was performing at time of injury.)
Mechanic

9 Department (Enter name of department or division in which the injured person is regularly employed, even though he may have been temporarily working in another department at the time of injury.)
Tank Fab and Assembly

The Accident or Exposure to Occupational Illness

If accident or exposure occurred on employer's premises, give address of plant or establishment in which it occurred. Do not indicate department or division within the plant or establishment. If accident occurred outside employer's premises at an identifiable address, give that address. If it occurred on a public highway or at any other place which cannot be identified by number and street, please provide place references locating the place of injury as accurately as possible.

10 Place of accident or exposure (No. and street, city or town, State, and zip code)
Cornell Tank and Valve Co, 2121 Oak Ave., Seattle, WA 98000

11 Was place of accident or exposure on employer's premises? Yes [XX] No [ ]

What was the employee doing when injured? (Be specific. If he was using tools or equipment or handling material, name them and tell what he was doing with them.)
Installing valve assemblies

13 How did the accident occur? (Describe fully the events which resulted in the injury or occupational illness. Tell what happened and how it happened. Name any objects or substances involved and tell how they were involved. Give full details on all factors which led or contributed to the accident. Use separate sheet for additional space.)
Arm popped when he reached behind him for wrench

Occupational Injury or Occupational Illness

14 Describe the injury or illness in detail and indicate the part of body affected. (E.g., amputation of right index finger at second joint; fracture of ribs, lead poisoning, dermatitis of left hand, etc.)
Shoulder strain

15 Name the object or substance which directly injured the employee. (For example, the machine or thing he struck against or which struck him; the vapor or poison he inhaled or swallowed, the chemical or radiation which irritated his skin, or in cases of strains, hernias, etc., the thing he was lifting, pulling, etc.)
Reaching for the wrench

16 Date of injury or initial diagnosis of occupational illness 3/7/86

17 Did employee die? (Check one) Yes [ ] No [XX]

Other

18 Name and address of physician

19 If hospitalized, name and address of hospital

Date of report 3/7/86

Prepared by Roberta Smith

Official position Nurse

OSHA No. 101 (Rev. 1981)

Heat applied. NTL

Bureau of Labor Statistics
Supplementary Record of
Occupational Injuries and Illnesses

U.S. Department of Labor

This form is required by Public Law 91-596 and must be kept in the establishment for 5 years. Failure to maintain can result in the issuance of citations and assessment of penalties.

Case or File No. 0-5

Form Approved O.M.B. No. 1220-0029

1 Cornell Tank and Valve Co.

2 Mail address (No. and street, city or town, State, and zip code)
2121 Oak Ave., Seattle, WA 98000

3 Location, if different from mail address

Injured or Ill Employee

4 Name (First, middle, and last)
Tom Wilkenson

Social Security No. 6 3 5 2 2 0 0 1 9

5 Home address (No. and street, city or town, State, and zip code)
8326 Moribund Ave., Fife, WA 98002

6 Age 28

7. Sex: (Check one) Male [X] Female [ ]

8 Occupation (Enter regular job title, not the specific activity he was performing at time of injury.)
Mechanic

9 Department (Enter name of department or division in which the injured person is regularly employed, even though he may have been temporarily working in another department at the time of injury.)
Tank Fab and Assembly

The Accident or Exposure to Occupational Illness

If accident or exposure occurred on employer's premises, give address of plant or establishment in which it occurred. Do not indicate department or division within the plant or establishment. If accident occurred outside employer's premises at an identifiable address, give that address. If it occurred on a public highway or at any other place which cannot be identified by number and street, please provide place references locating the place of injury as accurately as possible.

10 Place of accident or exposure (No. and street, city or town, State, and zip code)
Cornell Tank and Valve Co, 2121 Oak Ave., Seattle, WA 98000

11 Was place of accident or exposure on employer's premises? Yes [XX] No [ ]

12 What was the employee doing when injured? (Be specific. If he was using tools or equipment or handling material, name them and tell what he was doing with them.) Installing screw in hole overhead. Leaned back and hit bracket corner, sustaining puncture wound of back.

13 How did the accident occur? (Describe fully the events which resulted in the injury or occupational illness. Tell what happened and how it happened. Name any objects or substances involved and tell how they were involved. Give full details on all factors which led or contributed to the accident. Use separate sheet for additional space.) Leaned back and hit bracket corner while installing screw in hole overhead.

Occupational Injury or Occupational Illness

14 Describe the injury or illness in detail and indicate the part of body affected. (E.g., amputation of right index finger at second joint; fracture of ribs; lead poisoning; dermatitis of left hand, etc.) back, puncture wound

15 Name the object or substance which directly injured the employee. (For example, the machine or thing he struck against or which struck him; the vapor or poison he inhaled or swallowed; the chemical or radiation which irritated his skin; or in cases of strains, hernias, etc., the thing he was lifting, pulling, etc.) Bracket corner

16 Date of injury or initial diagnosis of occupational illness 3/8/86

17 Did employee die? (Check one) Yes [ ] No [XX]

Other

18 Name and address of physician

19 If hospitalized, name and address of hospital

Date of report 3/8/86

Prepared by Roberta Smith

Official position Nurse

OSHA No. 101 (Feb. 1981)

Tetanus Tox. Antiseptic and bandage. NTL

Bureau of Labor Statistics
Supplementary Record of
Occupational Injuries and Illnesses

This form is required by Public Law 91-596 and must be kept in the establishment for 5 years. Failure to maintain can result in the issuance of citations and assessment of penalties.

Case or File No. 0-7

Form Approved O.M.B. No. 1220-0029

Employer

1. Name
Cornell Tank and Valve Co.

2. Mail address (No. and street, city or town, State, and zip code)
2121 Oak Ave., Seattle, WA 98000

3. Location, if different from mail address

Injured or Ill Employee

4. Name (First, middle, and last)
Chad Myette

Social Security No. 6 3 5 2 2 0 0 1 9

5. Home address (No. and street, city or town, State, and zip code)
8326 Moribund Ave., Fife, WA 98002

6. Age 31

7. Sex: (Check one) Male [X] Female [ ]

8. Occupation (Enter regular job title, not the specific activity he was performing at time of injury.)
Mechanic

9. Department (Enter name of department or division in which the injured person is regularly employed, even though he may have been temporarily working in another department at the time of injury.)
Tank Fab and Assembly

The Accident or Exposure to Occupational Illness

If accident or exposure occurred on employer's premises, give address of plant or establishment in which it occurred. Do not indicate department or division within the plant or establishment. If accident occurred outside employer's premises at an identifiable address, give that address. If it occurred on a public highway or at any other place which cannot be identified by number and street, please provide place references locating the place of injury as accurately as possible.

10. Place of accident or exposure (No. and street, city or town, State, and zip code)
Cornell Tank and Valve Co, 2121 Oak Ave., Seattle, WA 98000

11. Was place of accident or exposure on employer's premises? Yes [XX] No [ ]

What was the employee doing when injured? (Be specific. If he was using tools or equipment or handling material, name them and tell what he was doing with them.) Countboring holes

13. How did the accident occur? (Describe fully the events which resulted in the injury or occupational illness. Tell what happened and how it happened. Name any objects or substances involved and tell how they were involved. Give full details on all factors which led or contributed to the accident. Use separate sheet for additional space.)
Pilot on counterbore broke, struck him in stomach

Occupational Injury or Occupational Illness

14. Describe the injury or illness in detail and indicate the part of body affected. (E.g., amputation of right index finger at second joint; fracture of ribs; lead poisoning, dermatitis of left hand, etc.)
abdomen - contusion, abrasion lower quadrant

15. Name the object or substance which directly injured the employee. (For example, the machine or thing he struck against or which struck him; the vapor or poison he inhaled or swallowed; the chemical or radiation which irritated his skin; or in cases of strains, hernias, etc., the thing he was lifting, pulling, etc.)
Counterbore

16. Date of injury or initial diagnosis of occupational illness 10/10/86

17. Did employee die? (Check one) Yes [ ] No [XX]

Other

18. Name and address of physician

19. If hospitalized, name and address of hospital

Date of report	Prepared by	Official position
10/10/86	Roberta Smith	Nurse

OSHA No. 101 (Feb. 1981)

2 hrs. bedrest. Return to work.

Bureau of Labor Statistics
Supplementary Record of
Occupational Injuries and Illnesses

U.S. Department of Labor

This form is required by Public Law 91-596 and must be kept in the establishment for 5 years. Failure to maintain can result in the issuance of citations and assessment of penalties.

Case or File No. 0-8

Form Approved
O.M.B. No. 1220-0029

1. Establishment name
Cornell Tank and Valve Co.

2. Mail address (No. and street, city or town, State, and zip code)
2121 Oak Ave., Seattle, WA 98000

3. Location, if different from mail address

Injured or Ill Employee

4. Name (First, middle, and last)
James Johnson

Social Security No. 6 3 5 2 2 0 0 1 9

5. Home address (No. and street, city or town, State, and zip code)
8326 Moribund Ave., Fife, WA 98002

6. Age 27

7. Sex: (Check one) Male [X] Female [ ]

8. Occupation (Enter regular job title, not the specific activity he was performing at time of injury.)
Mechanic

9. Department (Enter name of department or division in which the injured person is regularly employed, even though he may have been temporarily working in another department at the time of injury.)
Tank Fab and Assembly

The Accident or Exposure to Occupational Illness

If accident or exposure occurred on employer's premises, give address of plant or establishment in which it occurred. Do not indicate department or division within the plant or establishment. If accident occurred outside employer's premises at an identifiable address, give that address. If it occurred on a public highway or at any other place which cannot be identified by number and street, please provide place references locating the place of injury as accurately as possible.

10. Place of accident or exposure (No. and street, city or town, State, and zip code)
Cornell Tank and Valve Co, 2121 Oak Ave., Seattle, WA 98000

11. Was place of accident or exposure on employer's premises? Yes [XX] No [ ]

12. What was the employee doing when injured? (Be specific. If he was using tools or equipment or handling material, name them and tell what he was doing with them.)
Cutting tank part with tin snips

13. How did the accident occur? (Describe fully the events which resulted in the injury or occupational illness. Tell what happened and how it happened. Name any objects or substances involved and tell how they were involved. Give full details on all factors which led or contributed to the accident. Use separate sheet for additional space.)
Cut thumb while cutting tank with tin snips

Occupational Injury or Occupational Illness

14. Describe the injury or illness in detail and indicate the part of body affected. (E.g., amputation of right index finger at second joint; fracture of ribs; lead poisoning, dermatitis of left hand, etc.)
Thumb

15. Name the object or substance which directly injured the employee. (For example, the machine or thing he struck against or which struck him; the vapor or poison he inhaled or swallowed; the chemical or radiation which irritated his skin; or in cases of strains, hernias, etc., the thing he was lifting, pulling, etc.)
Tin

16. Date of injury or initial diagnosis of occupational illness 3/12/86

17. Did employee die? (Check one) Yes [ ] No [XX]

Other

18. Name and address of physician

19. If hospitalized, name and address of hospital

Date of report 3/12/86

Prepared by Roberta Smith

Official position Nurse

OSHA No. 101 (Feb. 1981)

Sutured lacerated thumb. Returned to work.

Bureau of Labor Statistics
Supplementary Record of
Occupational Injuries and Illnesses

This form is required by Public Law 91-596 and must be kept in the establishment for 5 years. Failure to maintain can result in the issuance of citations and assessment of penalties.

Case or File No. 0-10

Form Approved O.M.B. No. 1220-0029

Employer

Name: Cornell Tank and Valve Co.

2. Mail address (No. and street, city or town, State, and zip code): 2121 Oak Ave., Seattle, WA 98000

3. Location, if different from mail address:

Injured or Ill Employee

4. Name (First, middle, and last): Tim Bone

Social Security No.: 6 3 5 2 2 0 0 1 9

5. Home address (No. and street, city or town, State, and zip code): 8326 Moribund Ave., Fife, WA 98002

6. Age: 39

7. Sex: (Check one) Male ☐ Female ☐

8. Occupation (Enter regular job title, not the specific activity he was performing at time of injury.): Mechanic

9. Department (Enter name of department or division in which the injured person is regularly employed, even though he may have been temporarily working in another department at the time of injury.): Tank Fab and Assembly

The Accident or Exposure to Occupational Illness

If accident or exposure occurred on employer's premises, give address of plant or establishment in which it occurred. Do not indicate department or division within the plant or establishment. If accident occurred outside employer's premises at an identifiable address, give that address. If it occurred on a public highway or at any other place which cannot be identified by number and street, please provide place references locating the place of injury as accurately as possible.

10. Place of accident or exposure (No. and street, city or town, State, and zip code): Cornell Tank and Valve Co, 2121 Oak Ave., Seattle, WA 98000

11. Was place of accident or exposure on employer's premises? Yes ☒ No ☐

What was the employee doing when injured? (Be specific. If he was using tools or equipment or handling material, name them and tell what he was doing with them.) Regular work

13. How did the accident occur? (Describe fully the events which resulted in the injury or occupational illness. Tell what happened and how it happened. Name any objects or substances involved and tell how they were involved. Give full details on all factors which led or contributed to the accident. Use separate sheet for additional space.) Back went out on him while doing regular work, lifting.

Occupational Injury or Occupational Illness

14. Describe the injury or illness in detail and indicate the part of body affected. (E.g., amputation of right index finger at second joint; fracture of ribs; lead poisoning; dermatitis of left hand, etc.) Back

15. Name the object or substance which directly injured the employee. (For example, the machine or thing he struck against or which struck him; the vapor or poison he inhaled or swallowed; the chemical or radiation which irritated his skin; or in cases of strains, hernias, etc., the thing he was lifting, pulling, etc.) Lifting metal

16. Date of injury or initial diagnosis of occupational illness: 3/4/86

17. Did employee die? (Check one) Yes ☐ No ☒

Other

18. Name and address of physician

19. If hospitalized, name and address of hospital

Date of report: 3/4/86

Prepared by: Roberta Smith

Official position: Nurse

OSHA No. 101 (Feb. 1981)

Sent home; 11 days lost.

ureau of Labor Statistics
upplementary Record of
)ccupational Injuries and Illnesses

his form is required by Public Law 91-596 and must be kept in the establishment for 5 years. ailure to maintain can result in the issuance of citations and assessment of penalties.

Case or File No. 0-11

Form Approved O.M.B. No. 1220 0029

m

Cornell Tank and Valve Co.

2. Mail address *(No. and street, city or town, State, and zip code)*
2121 Oak Ave., Seattle, WA 98000

3. Location, if different from mail address

njured or Ill Employee

4. Name *(First, middle, and last)*
Leonard Jackson

Social Security No. 6 3 5 2 2 0 0 1 9

5. Home address *(No. and street, city or town, State, and zip code)*
8326 Moribund Ave., Fife, WA 98002

6. Age 4

7. Sex: *(Check one)* Male [XX] Female [ ]

8. Occupation *(Enter regular job title, not the specific activity he was performing at time of injury.)*
Mechanic

9. Department *(Enter name of department or division in which the injured person is regularly employed, even though he may have been temporarily working in another department at the time of injury.)*
Tank Fab and Assembly

The Accident or Exposure to Occupational Illness

If accident or exposure occurred on employer's premises, give address of plant or establishment in which it occurred. Do not indicate department or division within the plant or establishment. If accident occurred outside employer's premises at an identifiable address, give that address. If it occurred on a public highway or at any other place which cannot be identified by number and street, please provide place references locating the place of injury as accurately as possible.

10. Place of accident or exposure *(No. and street, city or town, State, and zip code)*
Cornell Tank and Valve Co, 2121 Oak Ave., Seattle, WA 98000

11. Was place of accident or exposure on employer's premises? Yes [XX] No [ ]

12. What was the employee doing when injured? *(Be specific. If he was using tools or equipment or handling material, name them and tell what he was doing with them.)* Bucking rivets

13. How did the accident occur? *(Describe fully the events which resulted in the injury or occupational illness. Tell what happened and how it happened. Name any objects or substances involved and tell how they were involved. Give full details on all factors which led or contributed to the accident. Use separate sheet for additional space.)* While bucking rivets, back started aching.

Occupational Injury or Occupational Illness

14. Describe the injury or illness in detail and indicate the part of body affected. *(E.g., amputation of right index finger at second joint; fracture of ribs; lead poisoning, dermatitis of left hand, etc.)* Back

15. Name the object or substance which directly injured the employee. *(For example, the machine or thing he struck against or which struck him; the vapor or poison he inhaled or swallowed; the chemical or radiation which irritated his skin; or in cases of strains, hernias, etc., the thing he was lifting, pulling, etc.)*
Rivet machine

16. Date of injury or initial diagnosis of occupational illness 3/14/86

17. Did employee die? *(Check one)* Yes [ ] No [XX]

Other

18. Name and address of physician

19. If hospitalized, name and address of hospital

Date of report 3/14/86

Prepared by Roberta Smith

Official position Nurse

OSHA No. 101 (Feb. 1981)

Strained back. 2 days lost.

ureau of Labor Statistics
upplementary Record of
)ccupational Injuries and Illnesses

U.S. Department of Labor

his form is required by Public Law 91-596 and must be kept in the establishment for 5 years. ailure to maintain can result in the issuance of citations and assessment of penalties.

Case or File No. 0-16

Form Approved O.M.B. No. 1220 0029

ier

Name
Cornell Tank and Valve Co.

2. Mail address (No. and street, city or town, State, and zip code)
2121 Oak Ave., Seattle, WA 98000

3. Location, if different from mail address

njured or Ill Employee

4. Name (First, middle, and last)
David Pallen

Social Security No. 6 3 5 2 2 0 0 1 9

5. Home address (No. and street, city or town, State, and zip code)
8326 Moribund Ave., Fife, WA 98002

6. Age 33

7. Sex: (Check one) Male [XX] Female [ ]

8. Occupation (Enter regular job title, not the specific activity he was performing at time of injury.)
Mechanic

9. Department (Enter name of department or division in which the injured person is regularly employed, even though he may have been temporarily working in another department at the time of injury.)
Tank Fab and Assembly

The Accident or Exposure to Occupational Illness

If accident or exposure occurred on employer's premises, give address of plant or establishment in which it occurred. Do not indicate department or division within the plant or establishment. If accident occurred outside employer's premises at an identifiable address, give that address. If it occurred on a public highway or at any other place which cannot be identified by number and street, please provide place references locating the place of injury as accurately as possible.

10. Place of accident or exposure (No. and street, city or town, State, and zip code)
Cornell Tank and Valve Co, 2121 Oak Ave., Seattle, WA 98000

11. Was place of accident or exposure on employer's premises? Yes [XX] No [ ]

What was the employee doing when injured? (Be specific. If he was using tools or equipment or handling material, name them and tell what he was doing with them.) Using Ketone

13. How did the accident occur? (Describe fully the events which resulted in the injury or occupational illness. Tell what happened and how it happened. Name any objects or substances involved and tell how they were involved. Give full details on all factors which led or contributed to the accident. Use separate sheet for additional space.) Exposure to Ketone, causing dermatitis

Occupational Injury or Occupational Illness

14. Describe the injury or illness in detail and indicate the part of body affected. (E.g., amputation of right index finger at second joint; fracture of ribs; lead poisoning, dermatitis of left hand, etc.) Body

15. Name the object or substance which directly injured the employee. (For example, the machine or thing he struck against or which struck him; the vapor or poison he inhaled or swallowed; the chemical or radiation which irritated his skin; or in cases of strains, hernias, etc., the thing he was lifting, pulling, etc.) Ketone

16. Date of injury or initial diagnosis of occupational illness 3/28/86

17. Did employee die? (Check one) Yes [ ] No [XX]

Other

18. Name and address of physician

19. If hospitalized, name and address of hospital

Date of report 3/28/86

Prepared by Roberta Smith

Official position Nurse

OSHA No. 101 (Feb. '98)

Advised not to work with Ketone for 1 month. NTL

ACCIDENT INVESTIGATION PROCEDURES

PURPOSE

The purpose of this lesson is to provide an overview of accident investigation techniques for the purpose of understanding accident prevention.

OBJECTIVES

1. State the two major goals of an accident investigation.
2. List three essential elements (types of information) required in an accident investigation report.
3. List the three types of causes of accidents per the 5484X form.
4. State DOE's three types of occurrences which require investigation and an example of each.

REFERENCES

1. 29 CFR 1910 Occupational Safety and Health Standards for General Industry, United States Department of Labor
2. 29 CFR 1960 Basic Program Elements for Federal Employee Occupational Safety and Health Programs and Related Matters
3. "Investigatiing Accidents in the Workplace: A Manual for Compliance Safety and Health Officers" OSHA 1977
4. DOE Order 5500.1 "Emergency Management"
5. DOE Order 5484.1, "ES&H Information Reporting Requirements"

DURATION

Two hours

INSTRUCTOR MATERIALS

Course manual with instructors notes.
Video Training Source, Inc "Accident Investigation in the Workplace"

Battelle
Pacific Northwest Laboratory is operated for the U.S. Department of Energy by Battelle Memorial Institute.

Accident Investigation Procedures

Objectives

1. State the 2 major goals of an accident investigation.
2. List 3 essential elements (types of information) required in an accident investigation report.

Objectives

3. List the three types of causes of accidents, per the 5484X form.
4. State DOE's three types of occurrences which require investigation and an example of each.

Definition of Accident

- An accident is an unplanned event that results in personal injury or property damage. Most are caused by the failure of people, equipment, supplies, or surroundings to behave or react as expected.

Types of Accidents

- Fatality - loss of life resulting from work injury during employees performance of duties
- Catastrophe - a combination of one or more fatalities and/or hospitalized employees totaling five or more

Nonfatal Injuries

- Lost workday cases—health events other than fatalities that result in days away from work
- Nonfatal cases without lost workdays result in:
  - transfer to another job
  - medical treatment other than first aid
  - loss of consciousness

Accident Investigation Goals

- Determine the causes of the accident
- Prevent it from happening again

Accident Investigation Report

- The following information should be included:
  - date, time and location
  - nature of injury and part of body affected
  - description of operations
  - hazardous conditions or defective equipment
  - measurements and other pertinent information

Site Survey

- Study all working areas or surfaces to detect and eliminate or control physical or environmental hazards that contribute to accidents
- Study all operating methods and practices involved with accidents

Witness Interviews

- Initiate as soon as possible after accident
- Establish rapport with the person being interviewed
- Discuss the purpose of the investigation and the interview
- Avoid interruptions or prejudgments
- Discuss methods of preventing recurrence
- Include more than one witness
- Obtain independent statements

Supervisor's Role

- The supervisor can:
  - Quickly assess the situation
  - Call for assistance
  - Isolate the hazard
  - Record the names of eye witnesses
- The supervisor knows:
  - the employees, their education and experience
  - the equipment, tools, operation

Safety and Health Committee

- Can provide additional expertise to support and complement the specific knowledge of supervisors
- Committee involvement indicates widespread interest in hazard control
- Must follow-up investigations to ensure the effectiveness of corrective actions

Preventive Measures Recommendation

- Steps to correct unanticipated events
- Safeguards to prevent worker from performing incorrectly
- Supervisor's actions/instructions on safe working practices
- Employee's actions

Causal Factors Analysis

- Three types of causes:
  - Direct—unsafe acts
  - Indirect—irregular or unusual conditions
  - Contributing—act of negligence on the part of some person or persons not directly involved in the accident

Direct Causes

- Examples of direct causes are:
  - operating at a speed that may be too fast for existing conditions
  - capacity overload (human or machine)
  - inattention

Indirect Causes

- Examples of indirect causes are:
  - defective conditions present prior to accident
  - unusual weather conditions
  - personnel conditions

Sources of Failure

- Human—physical, physiological, psychological limitations
- Technical data deficiency—inadequate operating instructions
- Organizational deficiency—inadequate planning, supervision, training or work practices

More Sources of Failure

- Material Failure—physical breakdown of any component
- Design Deficiency—exists if a component is so designed that failure can occur under normal circumstances
- Natural Phenomena—acts of nature

Accident Summary Report

- Prepared by supervisor or safety engineer
- Reviewed by persons involved for accuracy
- Reviewed by the safety committee for possible preventive actions

OSHA Accident Investigation Requirements for Federal Agencies

- 29 CFR 1960.29
  - all accidents should be investigated but the extent of such investigation shall be reflective of the seriousness of the accident
  - each accident which results in a fatality or the hospitalization of five or more employees shall be investigated to determine the causal factors involved

29 CFR 1960.29

- except to the extent necessary to protect employees and the public, evidence at the scene shall be left untouched until inspectors have an opportunity to examine it

Reasons for Federal Agency Accident Investigation

- Determine cause
- Identify ways to prevent similar accidents
- Document facts for compensation and litigation
- Uncover indirect accident causes
- Provide information on costs
- Publicize the Agencies interest in safety and health

DOE Occurrences Requiring Investigation

- Any fatal or imminently fatal injury or illness involving a DOE employee or contractor employee (Type A)
- Any one occurrence which results in five or more lost workday cases (Type A)

DOE Occurrences Requiring Investigation

- Any occupational illness which results in inpatient hospitalization (Type B)
- Any series of occupational illnesses with the same or similar causes involving five or more persons of which at least one is a lost workday case (Type B)

Type A Investigations

- Conducted by DOE HQ Inspector General or field organization board
- A board of investigation shall consist of 3 to 5 members, all DOE employees
- At least one board member shall be a trained accident investigator

Type B Investigations

- Conducted by DOE board consisting of DOE or contractor personnel or both at the discretion of the head of the field organization

Type A and B Investigation Reports

- Shall consist of:
  - summary
  - facts
  - analysis
  - conclusions

Type A and B Report Submission

- Transmitted by memo from the investigation board to the appointing official containing recommendations
- The appointing official shall submit 4 copies of the report to the Operational and Environmental Safety Division within 45 days
  - Type A reports shall also go to the Assistant Secretary and the Inspector General

Corrective Actions

- Immediate - taken by the DOE or contractors to prevent a 2nd occurrence
- Recommendations - not only prevent the recurrence of a similar event but also correct any systemic problems
- Additional corrective actions - may come from the appointing official or DOE HQ

Type C Investigations

- Conducted by either DOE or contractor personnel depending on whose operations are involved
- Standards for Type C investigations shall be established by the individual management

Accident Data Analysis

- Accident reports can furnish the information necessary to transform costly and ineffective procedures into a well-planned, organized and functional safety program, permitting full use of proven accident prevention techniques.

END

DATE FILMED

3/11/94