# NUCLEAR ISOTOPIC DILUTION OF HIGHLY ENRICHED URANIUM BY DRY BLENDING VIA THE RM-2 MILL TECHNOLOGY

**FINAL REPORT**

**Reporting Period Start Date: 1 October 2001**
**Reporting Period End Date: 31 August 2003**

**Raj K Rajamani, Project Manager**
**Sanjeeva Latchireddi, Research Associate**
**Vikas Devrani, Graduate Student**
**Harappan Sethi, Graduate Student**

**Under Subcontract**
**Roger Henry, INEEL**
**Nate Chipman, INEEL**

**August 2003**

**DE-AC26-01NT41312**

**University of Utah**
**135 S 1460 E Room 412, Salt Lake City 84112**

**Under Subcontract**
**Idaho National Engineering and Environmental Laboratory**
**P.O.Box 1625, Idaho Falls, ID 83415**

DISCLAIMER

This paper was prepared as an account of work sponsored by an agency of the United States Government. Neither the United States Government nor any agency thereof, nor any of their employees, makes any warranty, express or implied, or assumes any legal liability or responsibility for the accuracy, completeness, or usefulness of any information, apparatus, product, or process disclosed, or represents that its use would not infringe privately owned rights. Reference herein to any specific commercial product, process, or service by trade name, trademark, manufacturer, or otherwise does not necessarily constitute or imply its endorsement, recommendation, or favoring by the United States Government or any agency thereof. The views and opinions of authors expressed herein do not necessarily state or reflect those of the United States Government or any agency thereof.

**ABSTRACT**

DOE has initiated numerous activities to focus on identifying material management strategies to disposition various excess fissile materials. In particular the INEEL has stored 1,700 Kg of offspec HEU at INTEC in CPP-651 vault facility. Currently, the proposed strategies for dispositioning are (a) aqueous dissolution and down blending to LEU via facilities at SRS followed by shipment of the liquid LEU to NFS for fabrication into LWR fuel for the TVA reactors and (b) dilution of the HEU to 0.9% for discard as a waste stream that would no longer have a criticality or proliferation risk without being processed through some type of enrichment system. Dispositioning this inventory as a waste stream via aqueous processing at SRS has been determined to be too costly. Thus, dry blending is the only proposed disposal process for the uranium oxide materials in the CPP-651 vault. Isotopic dilution of HEU to typically less than 20% by dry blending is the key to solving the dispositioning issue (i.e., proliferation) posed by HEU stored at INEEL.

RM-2 mill is a technology developed and successfully tested for producing ultra-fine particles by dry grinding. Grinding action in RM-2 mill produces a two million-fold increase in the number of particles being blended in a centrifugal field. In a previous study, the concept of achieving complete and adequate blending and mixing (i.e., no methods were identified to easily separate and concentrate one titanium compound from the other) in remarkably short processing times was successfully tested with surrogate materials (titanium dioxide and titanium mono-oxide) with different particle sizes, hardness and densities.

In the current project, the RM-2 milling technology was thoroughly tested with mixtures of natural uranium oxide (NU) and depleted uranium oxide (DU) stock to prove its performance. The effects of mill operating and design variables on the blending of NU/DU oxides were evaluated.

First, NU and DU both made of the same oxide, $UO_3$, was used in the testing. Next, NU made up of $UO_3$ and DU made up of $UO_2$ was used in the test work. In every test, the blend achieved was characterized by spatial sampling of the ground product and analyzing for $^{235}U$ concentration. The test work proved that these uranium oxide materials can be blended successfully. The spatial concentration was found to be uniform.

Next, sintered thorium oxide pellets were used as surrogate for light water breeder reactor pellets (LWBR). To simulate LWBR pellet dispositioning, the thorium oxide pellets were first ground to a powder form and then the powder was blended with NU. In these tests also the concentration of $^{235}U$ and $^{232}Th$ in blended products fell within established limits proving the success of RM-2 milling technology.

RM-2 milling technology is applicable to any dry radioactive waste, especially brittle solids that can be ground up and mixed with the non-radioactive stock.

**TABLE OF CONTENTS**


| | TOPIC | Page No |
|---|---|---|
| 1. | INTRODUCTION | 1 |
| 2. | EXECUTIVE SUMMARY | 7 |
| 3. | EXPERIMENTAL SETUP | 9 |
| | 3.1 Testing equipment and infrastructure | 9 |
| | 3.1.1 Perma-Con™ enclosure | 9 |
| | 3.1.1.1 Construction of Perma-Con™ | 12 |
| | 3.1.2 HEPA filter | 12 |
| | 3.1.3 Glove box | 16 |
| | 3.1.4 Safety measures | 17 |
| | 3.1.4.1 Radiation measurement | 18 |
| | 3.1.4.2 Scintillation detectors | 19 |
| | 3.1.4.3 Pressure gauge for perma-con enclosure | 21 |
| | 3.2 RM-2 Mill description | 22 |
| | 3.2.1 Frame | 24 |
| | 3.2.2 Variable speed motor | 25 |
| | 3.2.3 Fixed speed motor | 26 |
| | 3.2.4 Gyration arm | 26 |
| | 3.2.5 Shaft | 27 |
| | 3.2.6 Canister cage | 27 |
| | 3.2.7 Canisters | 28 |
| | 3.2.8 Belt Drives | 29 |
| | 3.2.9 Self rotation system for canisters | 31 |
| | 3.2.10 Mechanism for shaft alignment | 32 |
| | 3.2.11 Safety enclosure for RM-2 mill | 33 |
| 4. | EXPERIMENTAL PROCEDURE | 34 |
| | 4.1 Safety startup check list | 34 |
| | 4.2 Equipment startup check list | 35 |
| | 4.3 Canister loading procedure | 35 |
| | 4.4 Mill motor startup and shutdown procedures | 36 |
| | 4.5 Canister loading an sampling procedure | 37 |
| 5. | EXPERIMENTAL WORK DESCRIPTION | 41 |
| | Sampling procedure | 42 |
| 6. | RESULTS AND DISCUSSION | 44 |
| | 6.1 Bending tests with same oxide samples | 44 |
| | 6.1.1 Isotope analysis | 44 |
| | 6.1.2 Product size distribution | 48 |
| | 6.1.3 Conclusions and discussions | 56 |
| | 6.2 Bending tests with mixed oxide samples | 57 |
| | 6.2.1 Description of samples and objectives | 57 |
| | 6.2.3 Product size distribution | 61 |
| | 6.2.4 Conclusions and discussions | 75 |
| | 6.3 Bending tests with surrogate of LWBR pellet | 75 |
| | 6.3.1 Light Water Breeder Reactor (LWBR) fuel pellets | 75 |
| | 6.3.2 Procurement of surrogate for LWBR pellets | 76 |
| | 6.3.3 Grinding of Thorium Oxide Pellets | 77 |
| | 6.3.4 Blending Tests with Thorium Oxide Powder and Natural Uranium | 81 |

| | | |
|---|---|---|
| | 6.3.5 Isotope Analysis | 82 |
| | 6.3.6 Product Size Distribution | 88 |
| 7. | DESIGN OF RM-2 MILL FOR PILOT FACILITY | 100 |
| | 7.1 Pilot RM-2 Mill Facility | 100 |
| | 7.1.1 Feed loading area | 102 |
| | 7.1.2 Blending area | 103 |
| | 7.1.3 Product handling area | 103 |
| | 7.1.4 Conveyer system and material flow | 104 |
| | 7.1.5 Bar code system | 105 |
| | 7.1.6 Protection and prevention measures | 106 |
| | 7.2 RM-2 Mill Design Details | 107 |
| | 7.2.1 Canister design | 110 |
| | 7.2.2 Canister cage assembly | 112 |
| | 7.2.3 Gyration arm design | 114 |
| | 7.2.4 Pulley drives | 116 |
| | 7.2.5 Bearing assembly | 121 |
| 8. | CONCLUSIONS | 124 |
| 9. | BIBLIOGRAPHY | 126 |
| 10. | LIST OF ACRONYMS AND ABBREVIATIONS | 127 |

## LIST OF GRAPHICAL MATERIAL


| | | |
|---|---|---|
| 1 | Figure 3.1 | Perma-Con™ Enclosure |
| 2 | Figure 3.2 | Block diagram/Top view of PERMA-CON enclosure 12ft.wide, 8ft.high, 10ft.long. |
| 3 | Figure 3.3 | Isometric view of the Perma-Con enclosure showing the main door, overhead lights, electrical connection vents, 12 inch diameter duct connection. |
| 4 | Figure 3.4 | HEPA filter inside the Perma-Con facility |
| 5 | Figure 3.5 | HEPA filter design |
| 6 | Figure.3.6 | HEPA cartridge (multi pleat) |
| 7 | Figure 3.7 | A dry glove box |
| 8 | Figure 3.8 | Side view of glove box showing aluminum casing on top through which filtered air is pulled up. |
| 9 | Figure 3.9 | 100 cm² Alpha scintillator |
| 10 | Figure 3.10 | 100 cm² Beta Scintillator |
| 11 | Figure 3.11 | Mark II Molded Plastic Manometers |
| 12 | Figure 3.12 | Schematic of the RM-2 Mill. |
| 13 | Figure 3.13 | Frame |
| 14 | Figure 3.14 | Fixed speed motor |
| 15 | Figure 3.15 | GV3000/SE (sensor less enhanced AC drive) |
| 16 | Figure 3.16a | Fixed speed motor |
| 17 | Figure 3.16b | GE CR308 line starter |
| 18 | Figure 3.17 | Gyration arm |
| 19 | Figure3.18 | Canister cage and the removable arm |
| 20 | Figure 3.19 | Canister |
| 21 | Figure3.20 | Belt drives in the RM-2 mill |
| 22 | Figure 3.21 | Self rotation system for canisters |
| 23 | Figure 3.22 | Bearings mounted on the RM-2 mill frame |
| 24 | Figure 3.23 | Spherical roller bearings and shaft alignment screws |
| 25 | Figure 3.24 | Hinged door assembly on safety enclosure for RM-2 Mill. |
| 26 | Figure 5.1 | The spatial sampling process |
| 27 | Figure 6.1 | Isotopic analysis of the blended product shown with +/- standard deviation error band. |
| 28 | Figure 6.2 | The size analysis of the natural uranium (NU) feed stock sample. |
| 29 | Figure 6.3 | The size analysis of the depleted uranium (DU) feed stock sample. |
| 30 | Figure 6.4 | The size analysis of the NU+DU mixture (20:80 mass ratios). |
| 31 | Figure 6.5 | Product size distribution of Test No.1A |
| 32 | Figure 6.6 | Product size distribution of Test No.2A |
| 33 | Figure 6.7 | Product size distribution of Test No.3A |
| 34 | Figure 6.8 | Product size distribution of Test No.4A |
| 35 | Figure 6.9 | Product size distribution of Test No.5A |
| 36 | Figure 6.10 | Product size distribution of Test No.6A |
| 37 | Figure 6.11 | Product size distribution of Test No.8A |
| 38 | Figure 6.12 | Product size distribution of Test No.9A |
| 39 | Figure 6.13 | Product size distribution of Test No.10A |
| 40 | Figure 6.14 | Product size distribution of Test No.11A |
| 41 | Figure 6.15 | Product size distribution of Test No.12A |
| 42 | Figure 6.16 | $^{235}U$ isotopic analysis of the blended products shown with upper and lower standard deviation error bounds. |

| | | |
|---|---|---|
| 43 | Figure 6.17 | The size analysis of the Natural Uranium feed stock sample. |
| 44 | Figure 6.18 | The size analysis of the depleted uranium ($UO_2$ form) stock sample |
| 45 | Figure 6.19 | The size analysis of the NU+DU mixture (20:80 weight ratios). |
| 46 | Figure 6.20 | Product Size distribution of Test -01B. |
| 47 | Figure 6.21 | Product Size distribution of Test -02B. |
| 48 | Figure 6.22 | Product Size distribution of Test -03B |
| 49 | Figure 6.23 | Product Size distribution of Test -04B |
| 50 | Figure 6.24 | Product Size distribution of Test -05B |
| 51 | Figure 6.25 | Product Size distribution of Test -06B |
| 52 | Figure 6.26 | Product Size distribution of Test -07B. |
| 53 | Figure 6.27 | Product Size distribution of Test -08B. |
| 54 | Figure 6.28 | Product Size distribution of Test -09B. |
| 55 | Figure 6.29 | Product Size distribution of Test -10B. |
| 56 | Figure 6.30 | Product Size distribution of Test -11B |
| 57 | Figure 6.31 | Product Size distribution of Test -12B |
| 58 | Figure 6.32 | Product Size distribution of Test -13B. |
| 59 | Figure 6.33 | Product Size distribution of Test -14B. |
| 60 | Figure 6.34 | Product Size distribution of Test -15B. |
| 61 | Figure 6.35 | Product Size distribution of Test -16B. |
| 62 | Figure 6.36 | Product Size distribution of Test -17B. |
| 63 | Figure 6.37 | Product Size distribution of Test -18B. |
| 64 | Figure 6.38 | Product Size distribution of Test -19B. |
| 65 | Figure 6.39 | Product Size distribution of Test -20B. |
| 66 | Figure 6.40 | Product Size distribution of Test -21B. |
| 67 | Figure 6.41 | Product Size distribution of Test -22B. |
| 68 | Figure 6.42 | Thorium oxide pellets received from PNNL. |
| 69 | Figure 6.43 | Zirconia grinding media used. |
| 70 | Figure 6.44 | 20 min grind product size distribution of Thorium oxide pellets. |
| 71 | Figure 6.45 | 40 min grind product size distribution of Thorium oxide pellets. |
| 72 | Figure 6.46 | 60 min grind product size distribution of Thorium oxide pellets. |
| 73 | Figure 6.47 | The $^{235}U$ isotope analysis of the blended products shown with upper and lower standard deviation error bounds. |
| 74 | Figure 6.48 | The $^{232}Th$ isotope analysis of the blended products shown with upper and lower standard deviation error bounds. |
| 75 | Figure 6.49 | The size analysis of the natural uranium feed stock sample. |
| 76 | Figure 6.50 | The size analysis of the thorium oxide feed stock sample. |
| 77 | Figure 6.51 | The size analysis of the NU+ThO2 mixture (80:20 weight ratio). |
| 78 | Figure 6.52 | Product size distribution of Test-01C. |
| 79 | Figure 6.53 | Product size distribution of Test-03C. |
| 80 | Figure 6.54 | Product size distribution of Test-04C. |
| 81 | Figure 6.55 | Product size distribution of Test-05C. |
| 82 | Figure 6.56 | Product size distribution of Test-06C. |
| 83 | Figure 6.57 | Product size distribution of Test-07C. |
| 84 | Figure 6.58 | Product size distribution of Test-08C. |
| 85 | Figure 6.59 | Product size distribution of Test-09C. |
| 86 | Figure 6.60 | Product size distribution of Test-10C. |
| 87 | Figure 6.61 | Product size distribution of Test-11C. |
| 88 | Figure 6.62 | Product size distribution of Test-12C |
| 89 | Figure 6.63 | Product size distribution of Test-13C |
| 90 | Figure 6.64 | Product size distribution of Test-14C. |
| 91 | Figure 6.65 | Product size distribution of Test-15C |

| | | |
|---|---|---|
| 92 | Figure 6.66 | Product size distribution of Test-16C. |
| 93 | Figure 6.67 | Product size distribution of Test-17C. |
| 94 | Figure 6.68 | Product size distribution of Test-18C. |
| 95 | Figure 7.1a | The general floor plan of the proposed pilot mill facility at INEEL |
| 96 | Figure 7.1b | The 3D view of the proposed pilot mill facility. |
| 97 | Figure 7.2 | Material flow scheme and bar code system. |
| 98 | Figure 7.3 | Schematic of the RM-2 Mill |
| 99 | Figure 7.4 | A view of RM-2 mill showing the gyration arm holding the pair of canisters in the horizontal position |
| 100 | Figure 7.5 | Canister Base |
| 101 | Figure 7.6 | Canister Lid |
| 102 | Figure 7.7 | Canister Assembly |
| 103 | Figure 7.8 | Canister Cage |
| 104 | Figure 7.9 | Canister Cage Assembly |
| 105 | Figure 7.10 | Gyration Arm |
| 106 | Figure 7.11 | Separator Arm |
| 107 | Figure 7.12 | Gyration Arms With Canister |
| 108 | Figure 7.13 | Canister Shaft Pulley |
| 109 | Figure 7.14 | Canister Shaft Pulley - 3D |
| 110 | Figure 7.15 | Gyration Arm Pulley |
| 111 | Figure 7.16 | Gyration Arm Pulley - 3D |
| 112 | Figure 7.17 | Variable Shaft Pulley |
| 113 | Figure 7.18 | Variable Shaft Pulley – 3D |
| 114 | Figure 7.19 | Fixed Shaft Pulley |
| 115 | Figure 7.20 | Fixed Shaft Pulley -3D |
| 116 | Figure 7.21 | Bearing Assembly |
| 117 | Figure 7.22 | Frame |
| 118 | Figure 7.23 | Rm2-Mill Assembly |

## 1. INTRODUCTION

As identified and defined in the Defense Nuclear Facility Board's *Recommendation 94-1* and in the DOE's *Vulnerability study*, Highly enriched uranium (HEU) in any of its physical forms is of primary concern because of proliferation issues and criticality safety issues. HEU is the uranium stock with greater than 20% $^{235}U$.

DOE has initiated numerous activities to focus on identifying material management strategies to disposition excess fissile materials. In particular EM Integration/2006 Plan, Processing Needs Assessment study, Nuclear Materials Integration Program, 97-1 $_{233}U$ Safe Storage Program and others. To date, many of these planning strategies have included isotopic dilution of highly enriched uranium (HEU) as a means of reducing the proliferation and criticality safety risks. The HEU at the INEEL is considered to be "off-spec" because of its $_{232}U$ and $_{236}U$ content. Decay of the $_{232}U$ produces a daughter product $_{208}Tl$ that has a high-energy gamma (2.8 MeV) emission. In addition to the $_{232}U$ and $_{236}U$ contamination some of the HEU product is also contaminated with fission products which further complicates the radiation exposure issues for storage and off-site shipment.

INEEL has about 1,700 Kg of free flowing $UO_3$ (off-spec HEU) currently stored at INTEC in CPP-651 vault facility. This is "excess" HEU material and does not meet the Oak Ridge acceptance criteria and has transportation issues related to shipping containers and external radiation fields. In its current state, this material can not be removed from CPP-651 for dispositioning. Removal of this material is the critical path item for achieving new/interim missions or closure of CPP-651. The dispositioning paths for this material include: (a) dilute to

about 5% $^{235}U$ enrichment for the off-spec TVA fuel fabrication program or (b) isotopically dilute to 0.9% $^{235}U$ enrichment for a disposal program. The proposed dispositioning requires the HEU to be characterized and repackaged at the INEEL to permit transfer to another site for dispositioning via the Tennessee Valley Authority (TVA) off spec HEU program.

In order to disposition the 1,700 kg of ("off-spec" HEU) free flowing $UO_3$, the feed stock must first be sampled, analyzed and repackaged to: (a) meet the receiver site processing criteria e.g., dissolver criticality safety limits at Savannah River Site (SRS), (b) utilize approved shipping containers (leak testable 6-M Drum) and (c) address related ALARA concerns for shipper and receiver. The utilization of the proposed dry milling and blending process is not intended to replace the final aqueous dissolution/dilution/extraction treatment step. Rather the purpose is to assure the material transfer from CPP-651, maintain ALARA throughout the process, assure the availability of a disposal option and help optimize the aqueous dilution/treatment system. Furthermore, the dry blending process uncouples the disposition option from the availability of aqueous processes in the DOE complex.

The use of dry blending as a pre-conditioning step to transfer the HEU to an aqueous dilution facility may produce some significant advantages. Isotopic dilution of HEU to typically less than 20% by dry blending is the key to solving the dispositioning issue (i.e., proliferation) presented by HEU stored at INEEL. It reduces storage costs because it no longer requires Category I and II safeguards and security (S&S) measures, promotes ALARA for shipper and receiver because the source term has been reduced and normalized, and most importantly could uncouple this material

from the dispositioning schedule of the SRS processing facilities by allowing it to be processed at other HEU dilution sites.

A successfully tested and developed technology – RM-2 mill (U.S. patent#6086242 July, 2000), developed at the University of Utah is used in this project. The RM-2 milling process was successfully tested previously with surrogate materials (titanium dioxide and titanium mono-oxide) with different particle sizes, hardness and densities[1]. These tests achieved complete and adequate blending and mixing (i.e., no methods were identified to easily separate and concentrate one titanium compound from the other) in remarkably short processing times.

Grinding action produces a two-million fold increase in the number of particles being blended. Mechano-fusion of the major component (DU) over the minor component (HEU) also occurs during grinding. HEU and DU particles sizes can be reduced to similar size to prevent separation. Hence, the RM-2 mill technology is a prime candidate for dispositioning grain structured nuclear materials.

**Project Objectives**

1. Demonstrate the feasibility of using the RM-2 mill to grind and blend uranium oxide ($U_3O_8$, $UO_3$, $UO_2$) streams with different $^{235}U$ enrichments, different particle size distributions and different densities into a uniformly mixed oxide that prevents the separation and enrichment of $^{235}U$ as an oxide. The first series of tests will use like uranium oxides (NU and DU) with similar densities but different particle sizes to demonstrate uniform and irreversible mixing uranium. The next series of tests will use mixture of different oxides with different densities and particles sizes.

2. Optimize the basic process relative to throughput rates, safety, safeguards, ALARA, and other INEEL site specific constraints for equipment sizes.
3. Develop a conceptual designs based on the demonstrated operations for application at the Idaho Nuclear Technology Engineering Center (INTEC) which is located in the INEEL site.

**Comparison of Existing Mill Technologies with RM–2 Mill Technology for Blending/ Grinding**

There are several technologies available for the grinding of oxide materials such as $UO_3$. The following technologies were evaluated against the unique requirements of the HEU blending process.

**Ball Mill**: The mill, for the purpose of HEU blending, would be cylindrical with lifter bars in the shell. HEU, DU, and 0.25 inch steel balls, as the grinding media would be placed in the mill. The mill would be lying on its shell surface over rollers that would spin the mill at approximately 105 rpm. The obvious drawback is that, with the mill diameter being so small, the impact forces of the media would be insufficient to grind the oxides down to the 1-10 microns needed. This mill would take approximately 48 hours to grind particles of size 70 microns to 1-10 microns.

**Vibratory Mill**: The ball mill described above would be vibrated back and forth about an axis such that the balls rub against the powder and the shearing action would enhance the grinding. The major drawback is that the energy generated would require several days to grind the oxides sufficiently.

**Attrition Mill**: The attrition mill would overcome the problem of the ball mills because it is a very high-energy process. In this process the canister would be filled with the HEU, DU, and steel grinding media of size 3-mm. Unlike the conventional ball mills, the bulk volume of grinding media would be very high - approaching 95% of the volume of the canister which leaves 40% of canister volume for the charge powders. This would add time and cost to the process. This mill would take approximately 20 hrs to reduce 70-micron particles to 1-5 microns. To date all most all of the commercial application of this mill is for wet processing. Dry grinding in attrition mill is almost unheard of, possibly because dry powder would invariably migrate to the wall of the mill and form a thick coating on it.

Another disadvantage of the attrition mill in this application has to do with the way the mill is energized. The balls are agitated with a rotating shaft (600 rpm approx.) fitted with paddles. Packing of the powder will occur against the shell walls and the sharp bends in the paddles. In these regions the powder will not be well blended. Finally, mass accountability and personnel safety are potential issues. Alter the grinding is done, the lid must be opened and the shaft and paddle device removed. This has the potential for loss of material and the creation of hazardous dust and spills.

**RM-2 Mill**: The RM-2 Mill is a technology developed (Dual Drive Planetary Mill, U.S. Patent No.6, 086,242, July, 11, 2000) at the University of Utah. This mill overcomes the disadvantages of the previous technologies by creating a very high energy intensive grinding regime in a self-contained, sealed canister. The mill is based on the principle of the planetary ball mill operation where a very high gravitational field is developed by a gyration arm spinning at high speed. Thus

the gyration arm produces a centrifugal field that is 10-100 times the gravitational field. The self-rotating canister is situated on the gyration arm.

The RM-2 Concept mill uses novel mechanical parts to affect the centrifugal field and mill rotation. This novel design enables the mill to operate at very high centrifugal fields not possible with other mill technologies. Due to the energy generated by this centrifugal field, size reduction to ultra fine sizes occurs very rapidly. The mill is ideally suited for small diameter mills (e.g., 5 inch or less) because of its ability to generate high energy even with small diameter canisters.

The volume of the grinding media would take up about 45% of the volume of the canister. After experiencing forces of approximately 40 G for 1 hour or less, the product would be ground to 1-10 microns in size and would be completely blended.

## 2. EXECUTIVE SUMMARY

As identified and defined in the Defense Nuclear Facility Board's *Recommendation 94-1* and in the DOE's *Vulnerability study*, Highly enriched uranium (HEU) in any of its physical forms is a primary concern because of proliferation issues and criticality safety issues. HEU is the uranium greater than 20% $^{235}U$. DOE has initiated numerous activities to focus on identifying material management strategies to disposition various excess fissile materials. In particular the INEEL has stored 1,700 Kg of off-spec HEU at INTEC in CPP-651 vault facility. Dispositioning of this inventory as a waste stream via aqueous processing at SRS has been determined to be too costly. Thus, dry blending using the RM-2 Mill technology has been chosen as the suitable disposal process available for the uranium oxide materials in the CPP-651 vault.

The objective of the test work is to prove that uranium oxide material and surrogate for LWBR pellets can be down blended in the 20:80 ratios. The blended stock must exhibit the expected concentration from a mass balance of the feed materials. Also, the blended stock must exhibit the same concentration at different spatial locations.

First, twelve tests were carried out with NU and DU, both made up of $UO_3$. In other words these tests were aimed at blending same oxide materials. NU and DU in the ratio 20:80 (by weight) were blended in the RM-2 mill. In each of the 12 tests, six spatial samples, totaling to 72 samples were taken. Error bands were established for the variability in feed stock and composition analysis. All of the 72 compositions fell within the upper and lower limit of expected composition, which goes to prove that the RM-2 mill can blend such materials. Furthermore, the NU and DU feed mixture of size 14 microns was reduced to a size of 6 microns in some tests. Thus size reduction coupled with complete blending reduces considerably the security risk posed by the blended product.

In the second series of tests, blending of $UO_3$ with UO2 was taken up. NU in $UO_3$ form was mixed with DU in $UO_2$ form in the ratio 20:80 by weight. A total of 22 blending tests were carried out. In six of these tests 3 spatial samples were taken and in the 16 other tests one sample each was taken. The reason for the reduced number of samples being that in the first test series it was shown that the blending is complete spatially. The size of the starting NU and DU mixture is 5 microns. In 7 out of the 22 product size analysis, the blended product size was found to be in the range 2 to 3 microns and in the rest 15 products the size was 15 microns approximately. While the RM-2 mill clearly brings about size reduction, there is always the possibility of finely ground fragments agglomerating together. This phenomena, known as "negative grinding" especially in dry grinding is well established n the literature. Hence, it would be advisable to grind such stocks for a short grind time. Once again, the composition of the 34 product samples fell within the upper and lower bounds, confirming complete blending.

In the third series of tests, thorium oxide pellets were used as the surrogate for LWBR pellets. These pellets measuring 10 mm in diameter and 10 mm long cylinders were readily ground to 15 micron size in 60 minutes. Next, the thorium oxide powder is blended with natural uranium in the weight ratio of 20:80. However, for reasons of time saving, a different thorium oxide powder

was used in these blending tests. A total of 18 blending tests were carried out and two samples were analyzed from each test. These samples were analyzed for $^{235}U$ and $^{232}Th$. Out of the 36 samples, 34 composition analysis ($^{235}U$) fell within the upper and lower bounds of expected composition. The two samples which fell below lower bound are attributed to error in chemical analysis. Thus, in this series of tests the power of RM-2 mill in blending and grinding is completely established.

Te report shows a conceptual design of a pilot facility to disposition the HEU stored in INEEL facility. The design incorporates two RM-2 mills, a feed preparation area, a product handling area and a belt conveyor system in an area of 52x20 ft. in particular, the design and construction of RM-2 mill is described in detail. This report gives sufficient detail for building this pilot facility.

# 3. EXPERIMENTAL SETUP

This section covers the *Task 1* of the Project which describes the development of the HEU blending facility. The details are provided and discussed under the following two sub-sections:

1. Testing Equipment and Infrastructure
2. The Test Procedure

## 3.1 Testing Equipment and Infrastructure

The testing system used in the blending work consists of a) Perma-Con™ enclosure, b) the RM-II mill and c) the glove box for materials handling.

### 3.1.1 Perma-Con™ enclosure

The Perma-Con™ enclosure, shown in Figure 3.1, houses both the RM-II mill and the glove box. The enclosure is air filtered on the inlet and outlet and a negative pressure is maintained to control contamination of any uranium oxide material that escapes from the mill or glove box operations. The glove box houses some of the support equipment for measuring feed stock material and sampling the blended product. The vacuum in the glove box is maintained at a slightly higher vacuum than the Perma-Con™ enclosure to help maintain inward air flow and thereby prevent the spread of any oxide particles.

Block diagram of PERMA-CON enclosure measures 12ft wide, 8ft high, 10ft long as shown in Figure.3.2 houses the RM-2 mill with HEPA filter, dry Glove box for handling materials and grinding media, two glass windows on the walls, main door, variable and fixed speed motors and a vent panel for electrical connection cords.

Figure 3.1: Perma-Con™ Enclosure

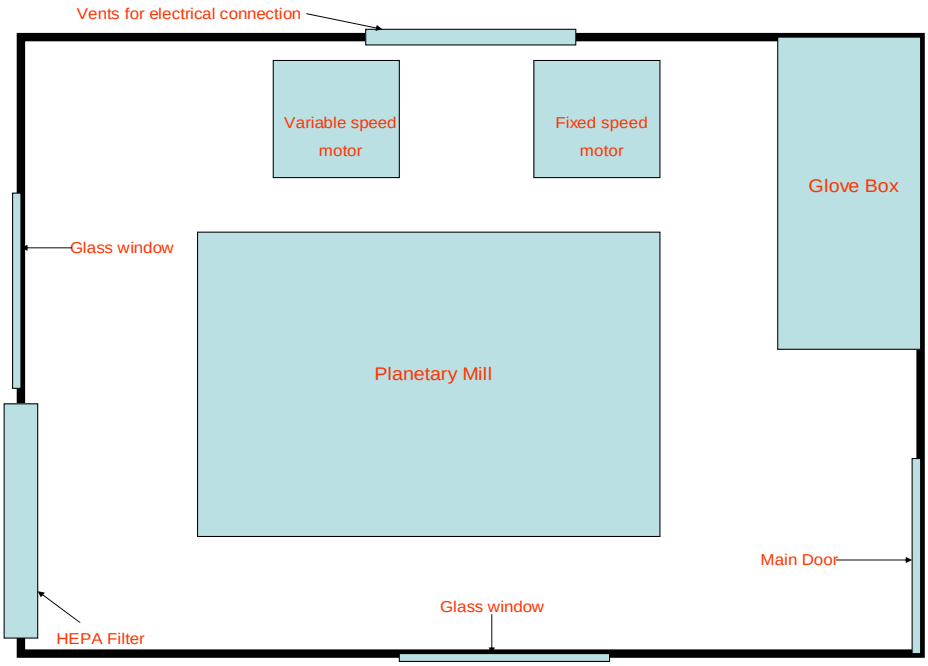


Figure.3.2 Block diagram/Top view of PERMA-CON enclosure 12ft.wide, 8ft.high, 10ft.long.

**<u>Lighting package assemblies</u>** comprise of a light fixture with gasketed high impact thermoplastic housing and acrylic lens, 3’ fluorescent lamps, 10’ electrical cord with plug accepting 115 VAC power source receptacles. There are two central fluorescent lamps each 3 feet in length fixed on the roof of the enclosure. Two 2’ by 2’ glass windows are provided on the enclosure for observing the working of the mill from outside. Four electrical connection vents are provided on a bottom panel of the PERMA-CON as an electrical supply for the variable speed motor, fixed speed motor, inner illumination and for other accessories. Electrical cords approximately 10 ft. long from the electrical unit pass through these vents to the variable and fixed speed motors. The rest of the volume of these vents is sealed air tight with silicone and other permanent sealants, so that proper vacuum is maintained that helps in preventing contamination outside the PERMA-CON enclosure. The isometric view of the steel enclosure is shown in Figure 3.3.

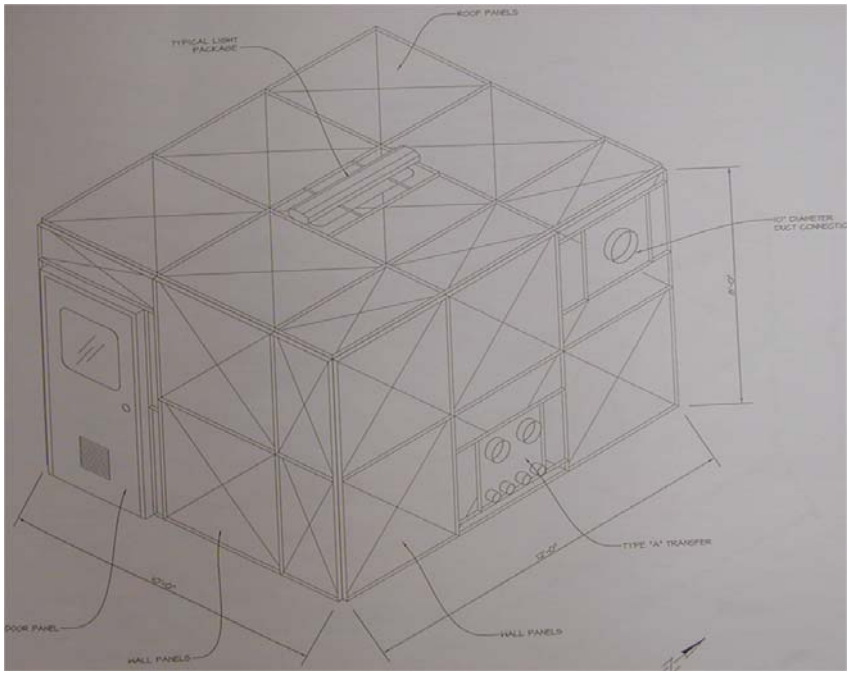


Figure.3.3 Isometric view of the Perma-Con enclosure showing the main door, overhead lights, electrical connection vents, 12 inch diameter duct connection.

#### 3.1.1.1 Construction of Perma Con

The PERMA-CON enclosure 12ft wide, 8ft high, 10ft long is comprised of reusable stainless steel sheathed modular panels, various specialty items and standard erection components which, when assembled, form an extremely versatile sealed enclosure. There are three basic components to the PERMA-CON system, all of which are completely reusable.

Locking keys These join two standard components together to form a connection. i.e. panel to panel, erection angle to panel.

Erection angles These are used to make all 90 degrees turn in standard installations. These angles are thick painted carbon steel, which secure to the modular panels with the help of locking keys.

Modular panels The typical panel consists of a stainless steel filler piece, which is riveted to a painted steel frame.

### 3.1.2 HEPA filter

A HEPA filter is mounted on the wall of steel enclosure as shown in figure 3.4. The outer dimensions of the filter housing are 2ft. x 2ft. The outer edge of the filter is covered by a 1 inch wide flange. As such, the cross sectional area would be 4 sq. feet minus the flange area, which would be approximately 0.66 sq. ft. However, the filter itself is folded over, which means that the actual area of the filter itself in two dimensions is much larger. Since each fold is about 5/16th of an inch apart, the number of folds would be 22 inch (24inch – 2inch for the flanges) divided by 5/16. The depth of each fold is 11.5 inches. So, the approximate area of a typical 2ft x 2ft x 11.5 inch HEPA filter, flattened out, is about 56 sq. feet. The detailed view of HEPA filter design and its various parts are shown in Figure 3.5.

Figure 3.4: HEPA filter inside the Perma-Con facility.

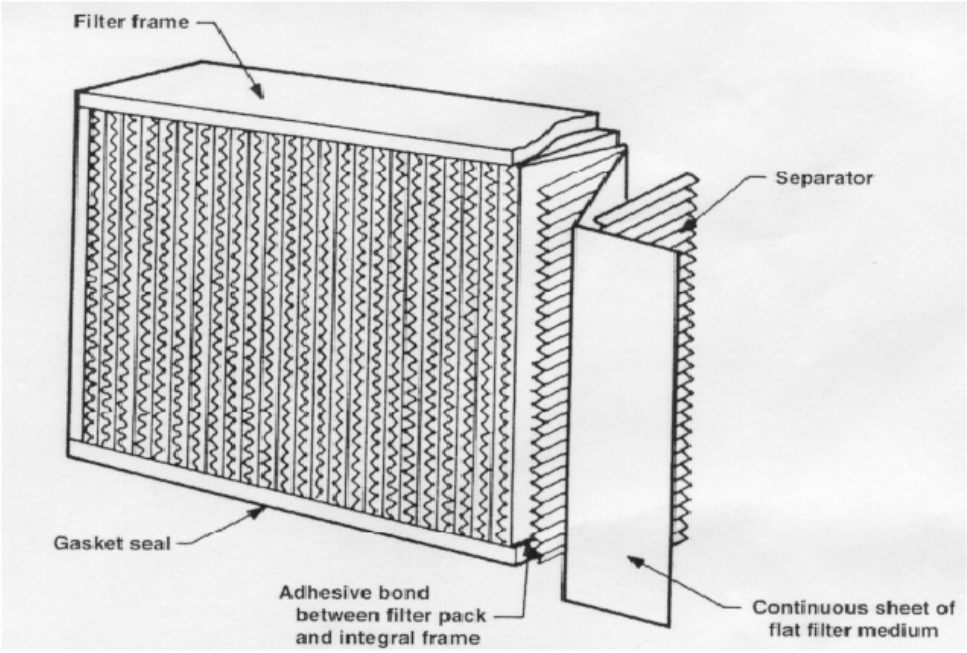


Figure 3.5: HEPA filter design

It is mounted on the modular panel of the enclosure and a small HEPA filter is attached to the glove box vacuum vent, both of which are further attached to a vacuum pump. HEPA (High Efficiency Particulate Air) filters are rated at 99.99% efficient at 0.3 microns. Pleated Air Filter helps extend the life of more expensive high-efficiency type filters. A multi pleat is shown in figure 3.6.

Figure.3.6: HEPA cartridge (multi pleat)

The Perma-Con$^{TM}$ enclosure is maintained at a negative pressure with respect to the surroundings to avoid contamination of uranium oxide powders that escapes from mill or glove box operations. The HEPA filter on the Perma-Con$^{TM}$ enclosure is used to trap the fine particles of nuclear oxides in its filter membrane, if discharged in the air, while the mill is in operation. The glove box is maintained at a negative pressure with respect to the Perma-Con$^{TM}$ enclosure and a small HEPA filter is installed on the glove box too to help control air borne nuclear oxide particles.

The floor of the Perma-Con™ facility is first covered with asbestos tiles, then, painted with a plastic paint, and a thick polythene cover is then used to cover the flooring area as a safety measure in case of contamination. Seams of the modular panels are filled with Silicone™, and then, covered with duct tapes to avoid any kind of leak.

### 3.1.3 Glove Box

The glove box has two chambers divided by a sliding glass door as a safety wall. One chamber is the transfer box to transfer things to the glove box from outside and the other one is the main chamber where the sampling and loading of aluminum canisters take place. The front view of the glove box is shown in figure 3.7.

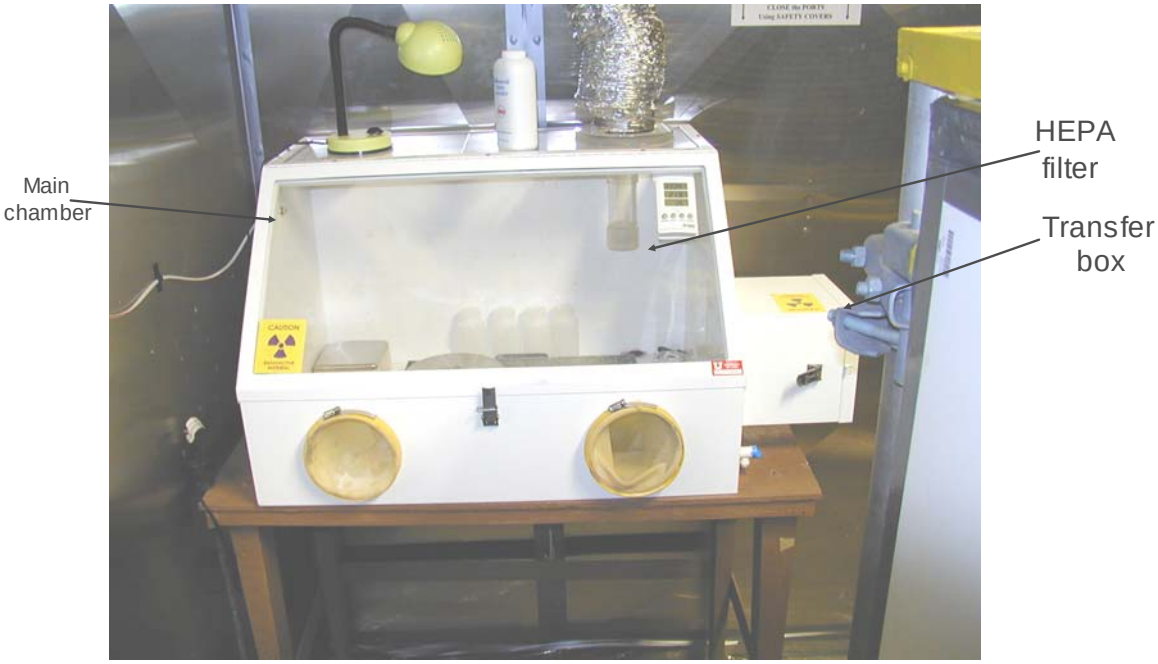


Figure 3.7 A dry glove box

One end of the flexible aluminum duct is attached to the variable speed vacuum fan that is mounted on the roof of the Perma-Con enclosure and the other end of the flexible aluminum duct is attached to the HEPA filter inside the glove box (as shown in figure 3.8) to keep the glove box at negative pressure with the enclosure. The small HEPA filter is for trapping the fine radioactive particles present inside the glove box. (The glove box is maintained at a negative pressure relative to the Perma-Con$^{TM}$ enclosure). The inside of the glove box is illuminated with a 60 W lamp.

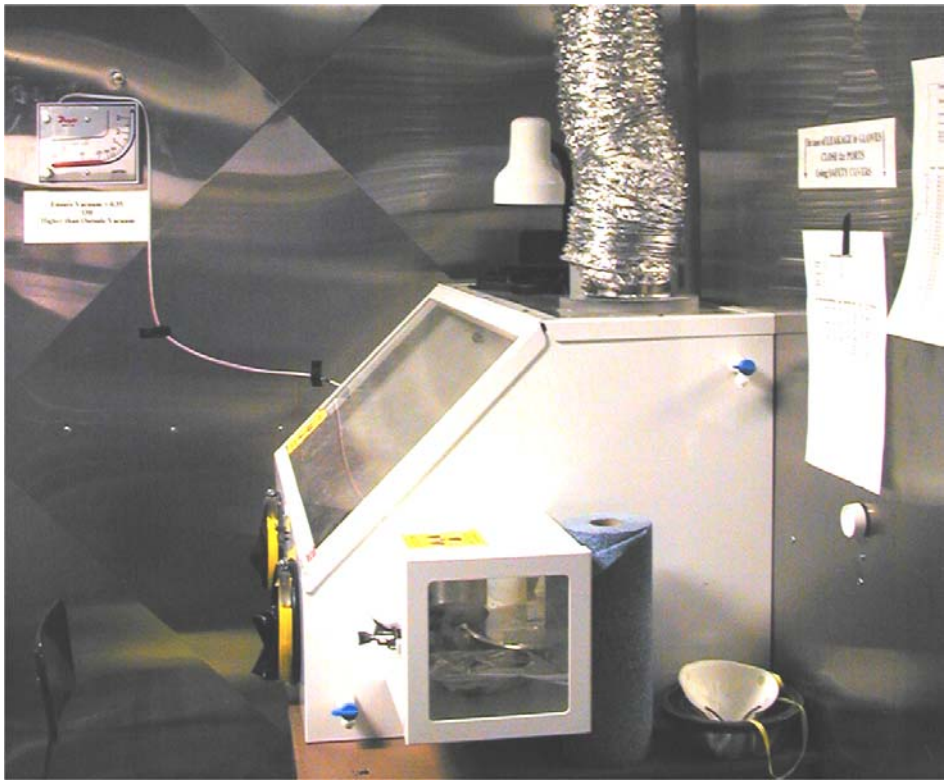

Figure.3.8: Side view of the glove box showing flexible aluminum duct on top through which filtered air is pulled up.

### 3.1.4 Safety measures

- A set of sticky door mats is fixed inside the steel enclosure so that the unwanted particles attached to the shoe or shoe cover adheres to the mat while working inside.
- A sticky floor cleaner is used to clean the floor of the Perma-Con$^{TM}$ enclosure.
- The Perma-Con$^{TM}$ is maintained at a negative pressure relative to the outside pressure and a HEPA filter is attached to filter out any radioactive particles.
- The glove box is maintained at a negative pressure relative to the enclosure.
- Cover alls are to be worn by the worker while working inside the facility. Shoe covers, latex gloves, caps, goggles, respirators are for the personnel safety.
- Radiation detectors are used before and after each test to check for contamination.
- Wastes such as contaminated gloves, wipes, shoe covers etc. are disposed off in a special radioactive trash and other wastes in a regular trash.
- While working, the glove box is maintained at a negative pressure of 2 inch relative to the pressure level of the Perma-Con$^{TM}$ enclosure. A manometer is fixed outside the glove box to monitor the negative pressure.

#### 3.1.4.1 Radiation measurement

For detecting leakage or contamination, alpha and beta detectors are specially calibrated for this kind of task. The detectors display the readings in both dose rate (mrem/hr) and counts per minute (cpm). These detectors are based on the ability of the radiation to ionize materials or to excite atoms within materials. Radiation detectors used fall into three categories: gas-filled detectors, scintillation detectors and semiconductor detectors.

Many of the differences among the ways in which these radiations interact and what types of detectors are appropriate depend on the fundamental differences among the radiations themselves. Alpha particles are heavy (as radiations go), consisting of 2 neutrons and 2 protons,

and have a charge of +2, and typical alpha particle energies are in the range from 3 to 10 MeV (million electron volts). Beta particles are energetic electrons, with a charge of –1, and are produced by the transformation of a neutron in the nucleus to a proton, an electron (beta particle), and an antineutrino; typical beta particle energies range from a few thousand electron volts to several MeV.

**3.1.4.2 Scintillation detectors.**

**Principle:** Scintillation detectors respond to energy absorption from ionizing radiation by emitting light. The light is most often measured with a photomultiplier tube that converts the light to an electronic pulse. These detectors may be either inorganic crystals or organic compounds. All inorganic scintillates rely on the crystalline nature of the material for light production and most have impurity atoms, with ionization potentials less than atoms of the crystal, added as activators.

In the current work 100 $cm^2$ air proportional alpha detector (Model 43-44-1) and 15 $cm^2$ Pancake G-M detector for beta gamma (Model 44-9) were used in radiation monitoring and control.

**Scintillation detector for alpha measurements** (Figure 3.9) is zinc sulfide activated with silver (ZnS(Ag)), inorganic scintillator. This material is not very transparent to light and is usually prepared as a large number of submillimeter-sized crystals attached with an adhesive to a flat piece of plastic or other material. The flat screen is optically coupled to a photomultiplier tube, which is attached to associate electronics. The voltage and discriminator levels are selected so

that the detector is sensitive to the rather large pulses from alpha interactions but insensitive to beta- or gamma-induced pulses.

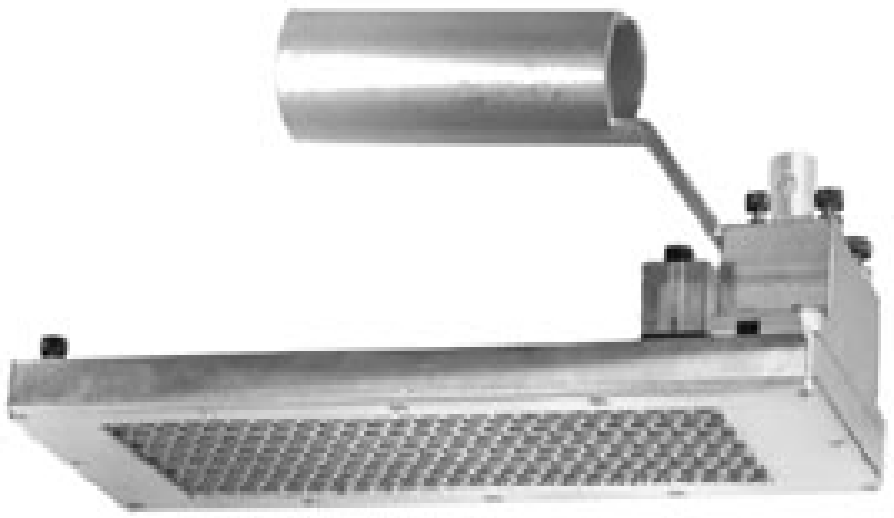

Figure.3.9. The Model 43-44-1 is a 100 cm² air proportional alpha detector for alpha survey

**Scintillation detectors for beta gamma measurements** (Figure 3.10) are often organic scintillators. Organic scintillators operate at the molecular level, which means that the light emission occurs as a result of fluorescence when a molecule relaxes from an excited level following excitation by energy absorption from ionizing radiation. Molecules such as anthracene, trans-stilbene, para-terphenyl, and phenyl oxazole derivatives are among the many organic species that have useful scintillation properties.

**Model 3 Survey Meter** **Model 44-9 Pancake G-M Detector** **Model 3 with a Model 44-9 Pancake G-M Detector**

Figure 3.10: 15 cm² Pancake G-M detector for beta gamma

Also, the dosimeters in the form of rings are provided to the radioactive user to keep track of the dose consumed by the worker. The exposure range for x-rays and gamma rays is from 30 mrem to 1000 rem and from 40 mrem to 1000 rem for energetic beta particles. The annual dose limit of a radioactive user is 5 rem.

### 3.1.4.3 Pressure gauge for Perma-Con™ enclosure

Two fluid type manometers are used in the facility. One molded plastic manometer is used to display the negative pressure inside the Perma-Con™ enclosure with respect to the surroundings. It's Maximum working temperature is 140°F with virtually indestructible molded white styrene-acrylonitrile housing, Each Mark II manometer have two tubing connectors for 1/8" pipe or sheet metal ducts, two mounting screws, 3/4 ounce fluid of indicating fluid (as shown in Figure. 3.11).

Second manometer is to keep track of the glove box negative pressure, which has to be at least 0.35 inch with respect to its exterior.

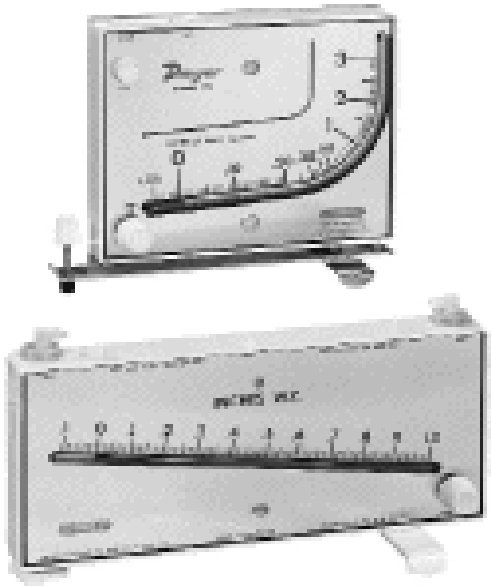

Figure 3.11: Mark II Molded Plastic Manometers

## 3.2 **RM-2 Mill Description**

The RM-2 mill is a dual drive or double drive planetary mill as shown in Figure 3.12. It consists of two canisters held between a pair of gyration arms and the gyration arm itself attached to the gyration shaft. The gyration motor spins the gyration shaft thus creating very high centrifugal field on the canisters. The power is transmitted via pulleys and timing belts. Likewise, the rotation motor produces the self-spinning of the canister. Since the gyration and rotation shafts are driven by independent motors, any combination of clockwise/counter clock-wise rotations can be set. Quiet vibration free operation is achieved by using transmission belts instead of chains and sprockets or gears and also carefully balancing the weight in the canisters. Table 1

summarizes the technical specifications of the mill. The major advantages of the RM-2 process are its: fast grinding time, simple design and mechanical reliability.

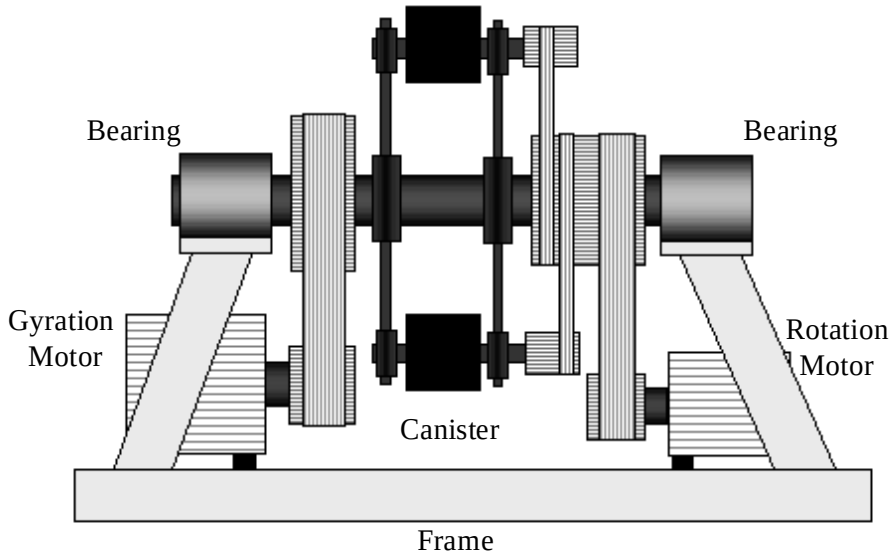


Figure 3.12: Schematic of the RM-2 Mill.

Table 1: RM-2 Mill technical specifications

| | |
|---|---|
| Gyration Motor | Single Phase 230VAC 60Hz, 5 HP |
| Rotation Motor | Three Phase 0-230VAC, 0- 60Hz, 10 HP |
| Speed of gyration | 310 rpm, 345 rpm, 390 rpm |
| Speed of rotation | Variable – same direction as gyration |
| Distance between the canisters | 69.1 cm |
| Two Canisters | 12.2 cm Diameter and 11.0 cm Long with Neoprene rubber lining. |
| Grinding media | 2-5 mm size balls of Alumina, Stainless steel, Zirconia, glass |

The RM-2 Mill facility consists of the following parts. The description of each individual part of the RM-2 Mill assembly is given in the subsequent paragraphs.

1. A frame
2. A variable speed motor
3. A fixed speed motor
4. A gyration arm
5. A shaft (D=3”)
6. Canister cage
7. Canisters
8. Belt drives
9. Self rotation system for canisters
10. Mechanism for shaft alignment
11. Bearings and
12. safety enclosure for RM-2 Mill

### 3.2.1 Frame

The frame of the RM-2 mill is made up of 3 inch square, hollow, steel bars. The bars are fixed to two I- beams that are bolted to the floor. The I-beams are 60 inches in length with 12 inch height and 6.5 inch width. The frame is as shown in Figure 3.13.

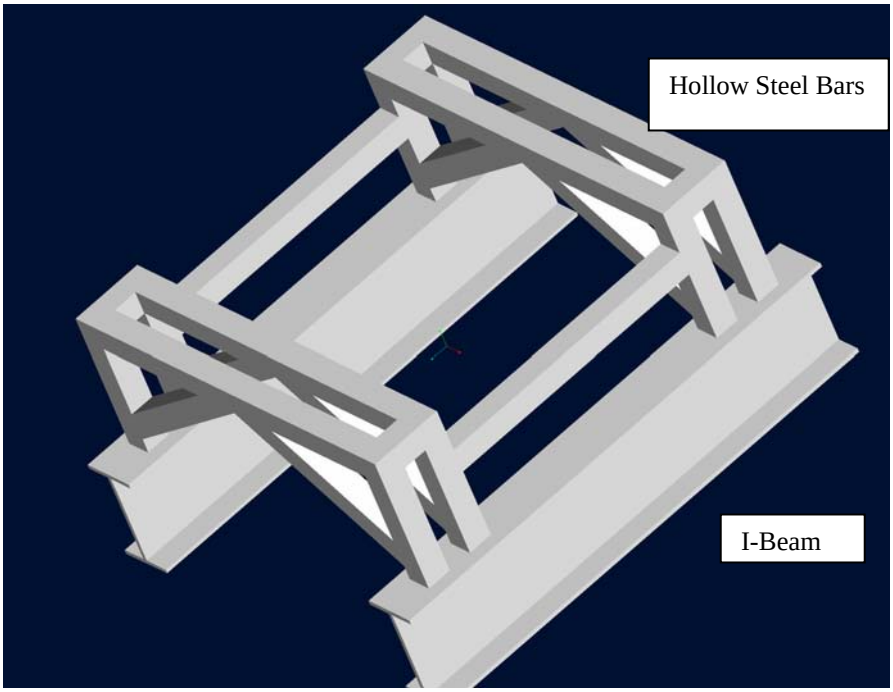


Figure 3.13: Frame

### 3.2.2 Variable speed motor

The variable speed motor is 0-230VAC, 0-60 Hz, 3PH, 10HP (Reliance Electronics) motor. The motor is operated using a GV3000/SE sensor less enhanced AC drive (10HP, AC input 200-230 Volts, 39.0 Max Amp, 60 HZ, 3 PH). The variable speed motor drives the larger pulley of the self rotating mechanism of the canisters. This pulley is on the shaft from which a pair of pulleys transmits power to canister axis shaft. The variable speed motor and variable speed controller are shown in figure 3.14 and 3.15.

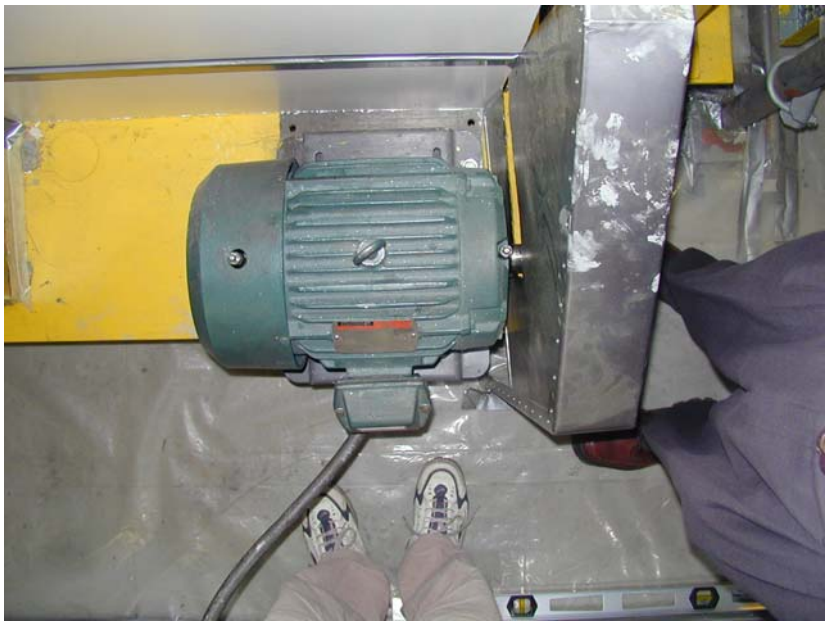

Figure 3.14: Fixed speed motor

Figure3.15: GV3000/SE (sensor less enhanced AC drive)

### 3.2.3 Fixed speed motor

The fixed speed motor is a single phase 230VAC, 60 Hz, 5 HP motor. It is operated using a GE CR308 line starter. The fixed speed motor drives the gyration shaft on which the canisters are mounted. The fixed speed motor is shown in Figures 3.16a and 3.16 b.

Figure 3.16a: Fixed speed motor

Figure 3.16b: GE CR308 line starter

### 3.2.4 Gyration arm

The gyration arm is used to hold the canister cages and is responsible for providing the centrifugal field. The length of the arm is 80 cm and the canister center to center distance on the arm is 69.1 cm. The arm consists of two steel plates (2inch thickness) supported by two hollow rectangular (4inch x 2inch) support beams. The fixed speed motor rotates the gyration arm. It is supported on two bearings on either side attached on the frame. There are also two pressed bearings provided on the gyration arm for the canister cages. The gyration arm is shown in Figure.3.17

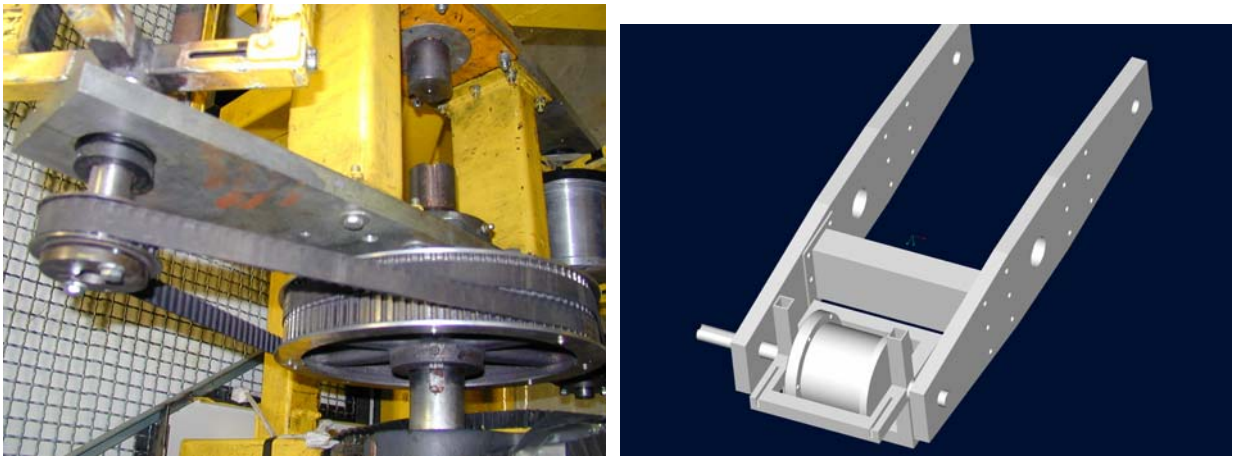

Figure 3.17: Gyration arm

### 3.2.5 Shaft

There are two shafts in the assembly of the RM-2 mill. These shafts hold the pulleys for the belt drive mechanisms. These shafts are 2 inches in diameter.

### 3.2.6 Canister cage

The canister cage consists of one removable and one adjustable square rod in order to accommodate the canister into the cage and then hold it firmly to prevent movement within the cage. The arms of the rods are provided with a cork padding with a rubber lining in order to prevent wear of canister surface. The adjustable and the fixed rod arms have two screws on either end to provide for the adjustments. The canister cage is shown in Figure 3.18

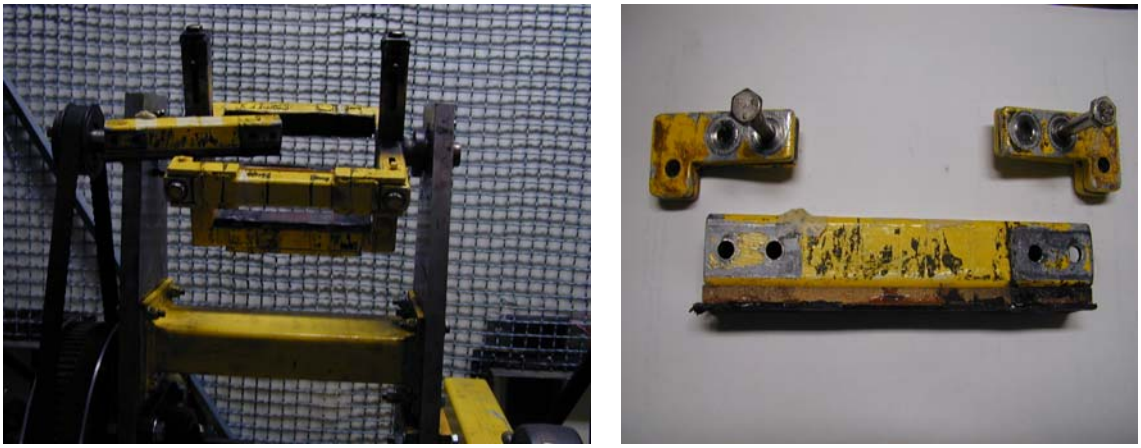

Figure.3.18: Canister cage and the removable arm

### 3.2.7 Canisters

There are two canisters within which the grinding and blending takes place. The canister body is made up of alumina and has a smooth shell. The canister is lined with rubber lining on its inner side to prevent wear when the grinding media hits the walls. It is also provided with an O-ring on the lid in order to prevent wear and to make it leak proof when closed. The canister is a cylinder having a flanged top and bottom. The lid fits on the open flanged top of the mill. The lid and the canister top flanged end is provided with six equally spaced threaded grooves. Six screws are used to fasten the lid and the open end of the canister. The canister is shown in Figure 3.19. It has internal diameter of 10 centimeters with 11 centimeters of height giving a volume of 864 cubic centimeters.

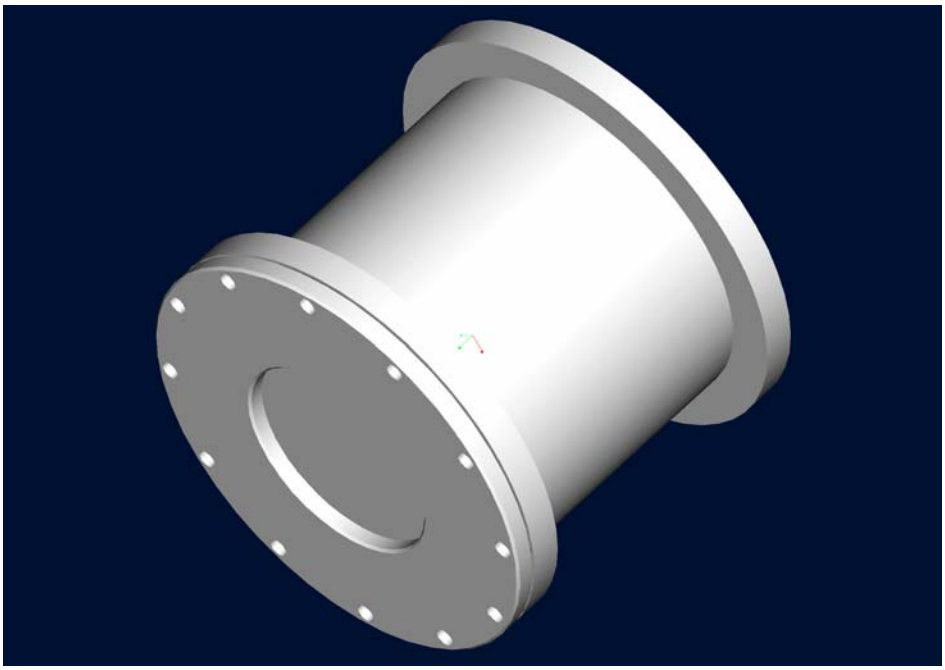

Figure 3.19: Canister

### 3.2.8 Belt drives

There are three belt-drives for power transmission in the operation of the RM-2 mill. The first belt drive runs from the fixed speed motor to the pulley on the gyration shaft. The second belt drive is driven by the variable speed motor. The belt drive driven by the variable speed motor is a V-belt drive that consists of 2 pulleys and a V-ribbed belt (Browning 1065L6, INSP S17). The pulley size on the motor end of the drive is 5.5inch and that on the shaft end is 14inch. Similarly the belt drive on the fixed speed motor consists of 3inch Pulley on the motor end and a 19inch pulley on the shaft end. The power is transmitted using three toothed belts 1cm wide each. The third belt drive is used for the self rotation of the canisters. This consists of a 12inch pulley on the shaft driven by the variable speed motor and two 3inch diameter pulleys on the shaft attached to the canister cage.

Figure.3.20: Belt drives in the RM-2 mill

The speed reduction ratio for the drives is as follows:-

<u>The variable speed drive</u>:

Motor shaft speed= 835 rpm,

Motor shaft diameter=5.5inch,

Variable speed shaft diameter=14inch

Variable shaft speed=835*5.5/14**=328.04 rpm**

<u>The fixed speed motor drive</u>:

Fixed shaft speed= 500 rpm,

Motor shaft diameter=3inch,

Fixed speed shaft diameter=19inch

Fixed shaft speed=500*3/19**=78.95 rpm**

### 3.2.9 Self rotation system for canister's

There is a pulley drive that drives the canister cages. The drive consists of three pulleys the larger one (D=12inch) on the shaft while the two smaller 3inch pulleys each mounted on either ends of the gyration arm causing the rotation of the two canister cages holding the canisters. The self rotation system is shown in the Figure 3.21.

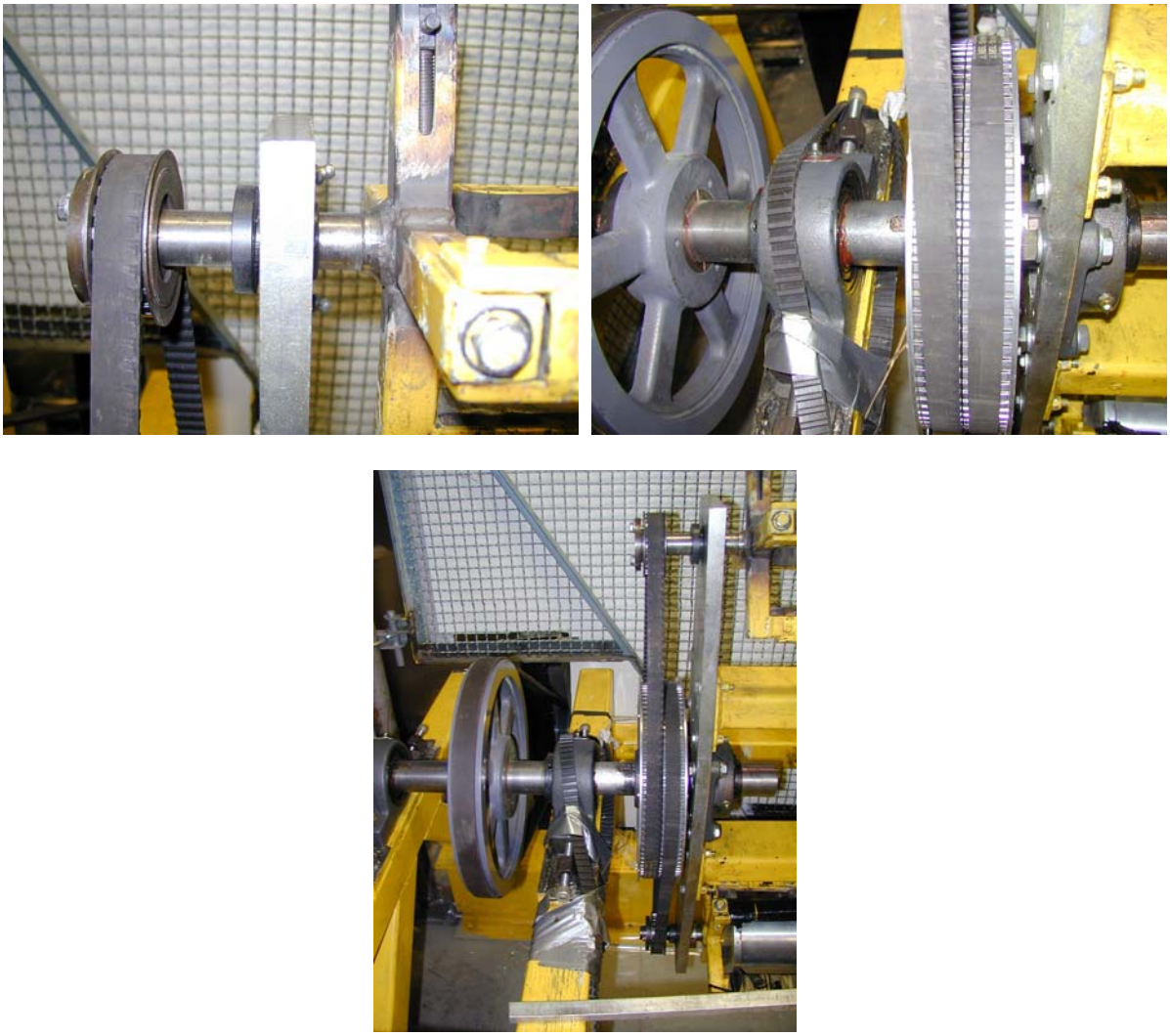

Figure 3.21: Self rotation system for canisters

The speed ratio for the drive is obtained as follows:

Fixed shaft speed= 328.04 rpm,

Motor shaft diameter=12inch,

Fixed speed shaft diameter=3inch

Fixed shaft speed=328.04*12/3**=1312.14 rpm**

### 3.2.10 Mechanism for shaft alignment

This consists of four bearings fixed to the frame that support the two separate shafts, fixed and gyration shafts. These are spherical roller bearings with 3inch bore diameter. The location of the four bearings in the RM-2 mill is shown in Figure 3.22.

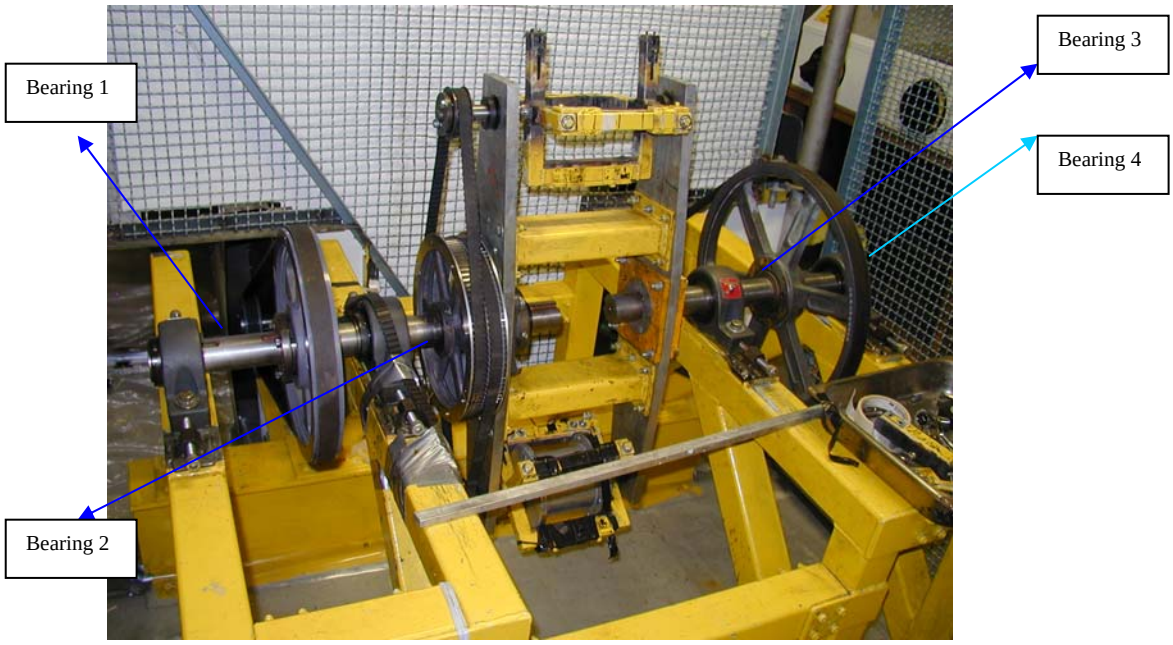


Figure 3.22: Bearings mounted on the RM-2 mill frame

There are two adjustment screws provided for each of these bearings. These screws are 4 inch long and 0.5 inch in diameter. These adjustment screws particularly moves the location of the

shaft minutely. The purpose of adjustment is to align the fixed speed shaft axis in line with the variable speed shaft axis. If the shafts are not in alignment the variable speed motor tends to draw twice the power. The bearing and the adjustment screw arrangement are shown in the Figure 3.23.

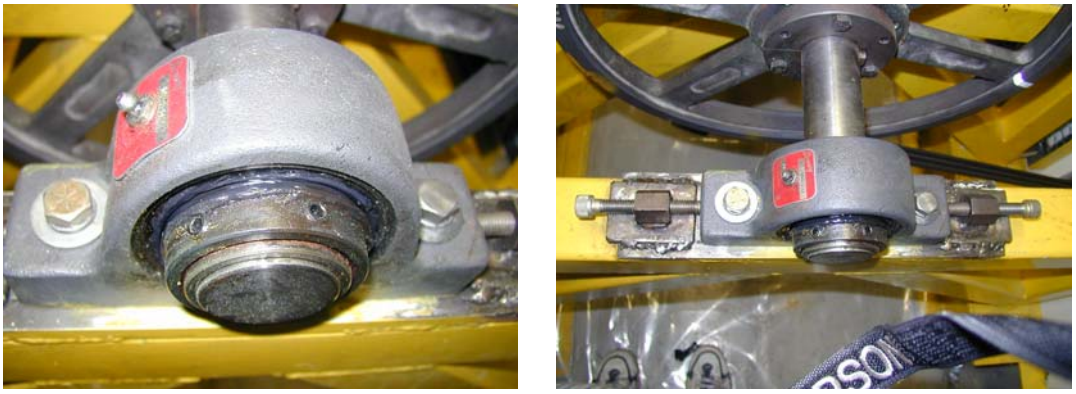

Figure 3.23: Spherical roller bearings and shaft alignment screws.

### 3.2.11 Safety enclosure for the RM-2 mill

The safety enclosure consists of a rectangular steel wire meshed cage with a roof. The cage has four cylindrical rods bolted to the floor. The panels of the safety enclosure are fixed on these rods and can be disassembled. The door of the enclosure is rubber padded and is a double hinged, so that it can be folded while opening. A side view of the cage is shown in Figure 3.24.

Figure 3.24: Hinged door assembly on safety enclosure for RM-2 Mill.

## 4. Experimental procedure

Considering the safety and radiation exposure of the personnel working on RM-2 mill facility, a detailed step-by step procedure was established for conducting the experiment. They are subdivided into the following sections:

1. Safety Startup Check List
2. Equipment Startup Check List
3. Canister Loading Procedure
4. Mill Motor Startup and Shutdown Procedures
5. Canister Loading and sampling Procedure

| | |
|---|---|
| 4.1 | **Safety Startup Check List**<br><br>• **Perma-Con™ filters are in place and functioning and floor covering is in place**<br><br>• Perma-Con™ is at a negative pressure relative to surrounding test area<br><br>• Glovebox vacuum is lower than Perma-Con™<br><br>• Glovebox filter and exhaust blower are in place and functioning correctly<br><br>• Check to make sure the glovebox lid is closed and locked.<br><br>• Safety related equipment available and functional (fire extinguisher, safety wash stand, power breakers, safety cage for RM-II mill, door and cage locks, shoe covers, blotter paper for step off area, shoe cover collection can, paper face filters, exit lights, coverall jump suit, glovebox port covers for glove openings, spare glovebox gloves, thin plastic hand gloves, backup/spare filters,…)<br>• Check lighting on glovebox and Perma-Con™ |
| 4.2 | Equipment Startup Check List<br><br>----Ensure the following items are inside the GB<br><br>• Stock Feed Sample bottle containing NU and DU<br>• Balance<br>• Transfer Funnel (big & small)<br>• Tape and scissors<br>• Spatula, Brush, Screen, Pan and Lid<br>• Tool to open Canister screws<br>• Grinding media<br>• Magnet<br>• Sample bottles<br>• Bottle of clean wipes<br>• Small trash collection bag<br>**----Ensure the following items are inside the Perma-Con™**<br>• Tools for loading and unloading canister from the mill yoke<br>• Lock for mill safety cage |

| 4.3 Canister Loading Milling Procedures | |
|---|---|
| 1 | Load the empty Canister into the transfer box of GB |
| 2 | Close and latch the entrance door |
| 1. | Check the GB vacuum (> 0.5) |
| 2. | Open the inner door & take the canister inside |
| 3. | Close the inner door |
| 4. | Un-screw the Canister bolts and fix them on other holes on Canister Lid |
| 5. | Open Canister lid and place it in the tray sitting on bolts |
| 6. | Weigh and transfer required quantity of 2-mm alumina grinding balls to the Canister |
| 7. | Weigh and transfer required quantity of NU to the Canister |
| 8. | Weigh and transfer required quantity of DU to the Canister |
| 9. | Close Canister lid and tighten 6 screws until O-ring seals |
| 10. | Tape the joint b/n lid and body of the Canister (3 rounds) |
| 11. | Insert Canister in Zip-Lock bag, remove air and close zip seal |
| 12. | Place the bagged Canister in transfer box & close the inner Glovebox door |
| 13. | Remove bagged Canister from GB transfer port box and place in second transfer plastic bag. Allow the vacuum from the Glovebox to remove the excess air from the second transfer bag and close the zip seal. Then close the outer door |
| 14. | Repeat steps 2-14 for the Counter Weight Canister |
| 15. | Locate tools and locking fixtures and remove from plastic bag |
| 16. | Position both canisters in the mill yoke and secure the same (two people). |
| 17. | Remove miscellaneous items from the mill area |
| 18. | Rotate the mill by hand and observe for free movement |

| | |
|---|---|
| 19. | Lock the cage gate with drop pin |
| 20. | Check to be sure no one is inside Perma-Con™ |
| 21. | Close Perma-Con™ door and lock the door |
| 22. | Start the mill (see instruction for starting and stopping mill motor) and operate for 60-120 minutes as specified. Observe mill form Perma-Con™ window |
| 23. | Allow the Canister to cool for 2 hours |

| **4.4** | **Mill Motor Startup Procedures** |
|---|---|
| 1. | Ensure the vacuum is ON (Perma-Con) |
| 2. | Unlock both Variable Speed (VS) & Fixed Speed (FS) motors |
| 3. | Turn ON the VS main Switch (Box-1) |
| 4. | Make sure the JOG mode is OFF (Box-2) |
| 5. | Check and adjust the RPM as required (Box-2) |
| 6. | Make sure the LED of Amp is ON (Box-2) |
| 7. | Press START switch of VS motor (Box-2) |
| 8. | Observe the Amps (14-15 amps) If out of range turn Power OFF |
| 9. | Check VS motor RPM |
| 9. | Start the Fixed Speed (FS) motor |
| 10. | Observe the Amps (16.5-17.5 amps) If out of range turn Power OFF |
| 11. | Check VS motor Amps throughout the test period. |
| | **Mill Motor Shutdown Procedures** |
| 1. | Press STOP switch of Fixed Speed (FS) motor |
| 2. | Press STOP switch of Variable Speed (VS) motor |

| 4.5 | Canister Unloading And Sampling Procedures |
|---|---|
| 1. | Conduct Safety Check as listed in Page-1 of this procedure |
| 2. | Conduct Radiation survey of the canisters or spillage |
| 3. | Ensure the following items are inside the GB<br>• Stock Feed Sample bottle containing NU and DU<br>• Balance<br>• Transfer Funnel (big & small)<br>• Tape and scissors<br>• Spatula, Brush, Screen, Pan and Lid<br>• Tool to open Canister screws<br>• Grinding media<br>• Magnet<br>• Sample bottles<br>• Bottle of clean wipes<br>• Small trash collection bag<br>• 2 pair of gloves to put on the GB Sleeve gloves |
| 4. | Open cage and assemble items for Canister removal |
| 5. | Hold Canister yoke while removing Canister (2 people) |
| 6. | Return tools to bag & close cage doors |
| 7. | Load the empty Canister into the transfer box of GB |
| 8. | Close the entrance door and latch door |
| 9. | Open the inner door & take the canister inside |
| 10. | Close the inner door |
| 11. | Place the following in the transfer port of GB<br>• Sample bottles (6 for INEEL and 2 for UOU)<br>• Small plastic bags |
| 12. | Place hands inside the GB sleeves and put-on the gloves on sleeves |
| 13. | Unlock ziploc bag on canister and Roll it down |
| 14. | Un-srew the Canister bolts and fix them on other holes on Canister Lid |

| | |
|---|---|
| 15. | Remove tape from Canister and place in trash ziploc bag in GB |
| 16. | Move Screen set nearer to GB window and place canister behind screen |
| 17. | Lift the Canister lid holding the screws & side opening towards glovebox window |
| 18. | Move the lid on to the Screen and keep in vertical position |
| 19. | Brush the rubber area and around the corners from top to bottom |
| 20. | Keep the Canister Lid sitting on bolts in the tray |
| 21. | Empty Canister contents into screen 1/4$^{th}$ and shake. Repeat until Canister is empty. |
| 22. | Brush the material, if any on corners of the canister rubber liner |
| 23. | Close the lid of the screen |
| 24. | Shake and Tap the screen until separation is complete; rest as required |
| 25. | Move Screen set behind the Canister |
| 26. | Keep the Big Funnel on Canister |
| 27. | Transfer the alumina balls from Screen to the Canister |
| 28. | Brush the material, if any, in funnel |
| 29. | Keep the funnel with screen in left rear corner of the tray |
| 30. | Close the Canister Lid and hand tighten the 6 screws |
| 31. | Keep the closed Canister in corner. |
| 32. | Rest for as long as required |
| 33. | Spread the sample in PAN evenly by tapping |
| 34. | Take 1$^{st}$ sample bottle from transfer port and open the cap |
| 35. | Weigh the sample bottle and TARE (0.00 displays) |

| | |
|---|---|
| 36. | Hold bottle in left hand and Spatula in right hand |
| 37. | Using spatula, draw lines to divide the blended material into 6 equal segments |
| 38. | Transfer approx 2 grams sample using Spatula from each of the 6 segments (Ensure the bottle is over the pan area) |
| 39. | Keep the spatula in PAN |
| 40. | Close the sample bottle cap |
| 41. | Seal the bottle with Tape |
| 42. | Place the sealed bottle in small sample bag and twist wire closer |
| 43. | Keep the sample bag with bottle in corner till all samples are collected |
| 44. | Rest as required |
| 45. | Repeat steps 28 – 38 for 7 more samples |
| 46. | Transfer the remaining material in PAN to Ziploc bag and zip it close |
| 47. | Keep the Ziploc bag in another ziploc bac and seal it with tape |
| 48. | Place all the sample bottles from GB into one ziploc bag.<br>Open the inner GB door and place the bag in transfer port and close the inner door. |
| 49. | Transfer the closed sample bag into a second bag on the end of GB transfer port allowing the GB vacuum to remove the excess air from the second bag. Seal the second transfer bag and close the outside transfer door |
| 50. | Talk to Radiation Health Survey (RHS) for Labeling and Shipment and check outer bag for surface contamination. If no contamination is detected place the sample transfer bag and its contents into the shipment package. |
| 51. | If RHS is not done, keep the sample box SAFE in Radioactive labeled box till the RHS personnel come and check. |
| 52. | Place the ziploc bag containing the remaining ground material in GB transfer port; close the inner door; open outer door and place it in another ziploc bag, Seal and Store in a Box to be shipped for disposal. |
| 53. | Place the small ziploc bag containing rubbish tapes in transfer port and close the inner door. Remove and place it in Trash bag |
| 54. | Take OFF the PPE in the following order and place them in Trash Can.<br>• Coverall<br>• Shoe covers<br>• Hand Gloves |

# 5 EXPERIMENTAL WORK DESCRIPTION

The detailed of the experimental work to be carried out as proposed in this project are summarized under Task 2.2 and Task 3:

**Task 2.2 - Uranium Blending Tests**

The contractor will perform a series of NU and DU blending tests in accordance with the approved management plan. The test program will consist of at least three blending test sets, and each set will include at least 10 tests. The contractor will perform size analysis on the blending materials of initial 10 tests of set one, which will include different grinding media sizes and filling levels. The contractor will perform the spatial sampling, isotope analysis and size analysis of ground products resulting from the remaining (20) tests of the second and third sets. Contractor will modify the blending mill and the canisters as required. In the second set of 10 tests, the contractor will include at least three feed stock sizes and three mill speed tests, and perform the spatial sampling and isotope analysis. In the third set of 10 tests, the contractor will perform five initial tests on mixed uranium oxides ($UO_3$ and $U_3O_8$) or their equivalent surrogate material. The remaining five tests will use mixed uranium oxides or surrogates with at least two ball sizes and mill speeds. The contractor will analyze blending mill testing data of all three aforementioned test sets. The contractor will optimize the uranium blending tests by varying the blending time, media size, feed stock mass, and mill speed.

**Task 3 –Light Water Breeder Reactor (LWBR) Fuel Pellet Testing**

The contractor will analyze the blending mill data for operations and safety improvements. Based on this analysis, the contractor will incorporate any relevant mill modifications necessary

to perform the subsequent testing. The contractor will perform the ten grinding tests with the surrogate LWBR fuel-pellets material. These tests will be carried out on the lab scale RM-2 mill facility at University of Utah. The test work will include: two media sizes, two mill speeds, and three filling levels tests. In each test, the particle size distribution of the ground product will be measured.

## 5.1 Sampling procedure

The mill canister was filled with a mixture of Natural uranium ($UO_3$) and the depleted uranium ($UO_3$/ $UO_2$) or surrogate of LWBR pellets. Alumina grinding media with a diameter of 2 – 3 mm was then added to the desired level of mill filling. The counterweight canister was filled with limestone sample of equal in mass to the first canister. Then both the canisters were sealed and placed in the RM-2 mill. The centrifugal field of the gyration arm was set at 35G and the canister rotation speed set at the desired percent of critical speed. The sample was ground for the set grinding time and is left aside for 2 hours to cool down.

The canister was then transferred into the Glove box, the contents were transferred on to a 1.7 mm aperture sieve, and the powder from the alumina grinding media was separated. The powder was then spread evenly and spatial representative samples were taken for both chemical and size analysis as shown in Figure 5.1.

Figure 5.1: The spatial sampling of the blended product inside the glove box.

The scope of these studies are to demonstrate the RM-2 milling technology by testing with uranium oxide materials (DU and NU), and to better define operating parameters and identify related safety issues. The effect of mill operating and design variables on the blending of NU/DU oxides was studied with the intent to optimize the process. Three sets of tests were conducted under this project.

1. mixture of NU and DU of same oxides ($UO_3$)
2. mixture of NU and DU of mixed oxides ($UO_2$ with $UO_3$)
3. mixture of thorium oxide (surrogate for Light Water Breeder Reactor) and NU.

# 6 RESULTS AND DISCUSSION

## 6.1 Blending Tests with Same Oxide samples

In this section, the isotopic analysis and size distribution results obtained from the blending tests carried out with the same oxide samples are discussed. The limited weight of DU sample (500 grams) severely restricted the number of tests and test conditions possible in the first batch of blending tests with the same oxide samples. A total of 12 tests were carried out with the available NU and DU sample. These tests were aimed primarily to understand the effect of grinding media balls (3 and 2 mm), void filling (50 and 75%) and grinding time (30, 60 and 90 minutes) on blending and product size distribution.

The chemical analysis of the ground products were analyzed by a VG Elemental PQ3 inductively coupled plasma mass spectrometry (ICP-MS) at Argonne National Laboratory-West (ANL-W) for $^{235}U/^{238}U$ isotope analysis. The size analysis of the products was done at ACTLab, (1336 Sandhill Drive, Ancaster, Ontario, Canada L9G4V5). The results thus obtained are discussed in this section.

### 6.1.2 Isotopic Analysis

The repeated chemical analysis and the mean values of Natural Uranium (NU) and Depleted Uranium (DU) feed stock samples are shown in Table 6.1 and 6.2.

Table 6.1: Chemical analysis of NU feed stock

| Sample No. | $^{235}U/^{238}U$ isotope mass ratio |
|---|---|
| 1 | 0.00725 |
| 2 | 0.00732 |
| Mean/average, $E(C_{NU})$ | 0.007285 |
| Standard diviation ($\sigma_{NU}$) | $4.950 \times 10^{-5}$ |

Table 6.2: Chemical analysis of DU feed stock

| **Sample No.** | **$^{235}U/^{238}U$ isotope mass ratio** |
|---|---|
| 1 | 0.00283 |
| 2 | 0.002793 |
| Mean/average, $E(C_{DU})$ | 0.0028115 |
| Standard diviation ($\sigma_{DU}$) | $7.071 \times 10^{-5}$ |

In each blending test, NU and DU feed stock in the weight ratio 20:80, was used. Therefore in the blended product we expect the mean value of the isotope mass ratio to be given by the formula:

$$E(C_M) = 0.8E(C_{DU}) + 0.2E(C_{NU})$$
$$= 0.8 \text{ x } 0.0028115 + 0.2 \text{ x } 0.007285$$
$$= 0.0037062$$

Where E(..) denotes expected or mean value, $C_M$ stand for isotope ratio in the mixture, $C_{DU}$ denotes isotope ratio in the depleted uranium, $C_{NU}$ denotes the isotope ratio in natural .

Therefore, we expect the blended mixture to show an isotope ratio of 0.0037062. In a similar manner, the variability or standard deviation ($\sigma$) of the blended mixture is given by:

$$\sigma_M = \sqrt{\left(0.8^2 \sigma_{DU}{}^2\right) + \left(0.2^2 \sigma_{NU}{}^2\right)}$$
$$= \sqrt{\left(0.8^2 x(7.071x10^{-5})^2\right) + \left(0.2^2 x(4.950x10^{-5})^2\right)}$$
$$= 5.7428 \text{x} 10^{-5}$$

Where, the subscripts M, DU and NU denote mixture, depleted uranium and natural uranium respectively.

The overall error or composite error in the product analysis included the measurement error also. The measurement error refers to the error produced by Inductively Coupled Plasma Spectroscopy. Therefore the overall error is

$$\begin{aligned}\text{Overall Error} &= \pm\left(2\sigma_M + 0.05E(C_M)\right)\\ &= \pm\left(2\times 5.7428\times 10^{-5} + 0.05\times 0.0037062\right)\\ &= \pm 2.4274\times 10^{-4}\end{aligned}$$

Therefore we expect the experimental product isotope analysis to fall within a band given by

Upper limit = 0.0037062 + ($2.4274\text{x}10^{-4}$) = $3.949\text{x}10^{-3}$

Lower limit = 0.0037062 - ($2.4274\text{x}10^{-4}$) = $3.464\text{x}10^{-3}$

The experimental conditions of each test carried out with same oxide samples of NU and DU are given in Table 6.3. The mass ratio of $^{235}U/^{238}U$ isotopes estimated for the six spatial samples taken from each test product are given in Table 6.4.

Figure 6.1 shows a plot of the spatial sample analysis in each of the tests with the expected upper and lower limit. Since there are 12 tests and 6 spatial samples extracted in each test, figure 6.1 shows 72 sample data points. It is seen that all of the points fall within the upper and lower limits which implies that blending is complete in all spatial samples. Hence, we conclude that the entire mixture in the canister is completely blended.

Table 6.3: RM-2 mill operating conditions (same oxide samples)

| Test No | Ball Size (mm) | Void Filling (%) | Critical Speed (%) | Grind Time (min) |
|---|---|---|---|---|
| 1A | 3 | 50 | 63 | 30 |
| 2A | 3 | 50 | 63 | 60 |
| 3A | 3 | 50 | 63 | 90 |
| 4A | 2 | 50 | 63 | 30 |
| 5A | 2 | 50 | 63 | 60 |
| 6A | 2 | 50 | 63 | 90 |
| 7A | 2 | 75 | 63 | 30 |
| 8A | 2 | 75 | 63 | 60 |
| 9A | 2 | 75 | 63 | 90 |
| 10A | 2 | 50 | 70 | 30 |
| 11A | 2 | 50 | 70 | 60 |
| 12A | 2 | 50 | 70 | 90 |

Table 6.4: Experimental results (same oxide samples): analysis of spatial samples.

| | Mass ratio of $^{235}U/^{238}U$ isotopes in spatial samples | | | | | | |
|---|---|---|---|---|---|---|---|
| Test No | Sample 1 | Sample 2 | Sample 3 | Sample 4 | Sample 5 | Sample 6 | Mean |
| 1A | 0.00368 | 0.00371 | 0.00365 | 0.00359 | 0.00364 | 0.00357 | 0.00364 |
| 2A | 0.0036 | 0.00359 | 0.00367 | 0.00369 | 0.0037 | 0.00372 | 0.00366 |
| 3A | 0.00369 | 0.00365 | 0.00372 | 0.00368 | 0.00361 | 0.00360 | 0.00366 |
| 4A | 0.00358 | 0.00354 | 0.00356 | 0.00358 | 0.00351 | 0.0036 | 0.00358 |
| 5A | 0.00358 | 0.00361 | 0.00367 | 0.00365 | 0.00366 | 0.00367 | 0.00356 |
| 6A | 0.0036 | 0.00361 | 0.00352 | 0.00354 | 0.0036 | 0.00359 | 0.00364 |
| 7A | 0.00364 | 0.00371 | 0.0036 | 0.0036 | 0.00357 | 0.00369 | 0.00364 |
| 8A | 0.00369 | 0.00361 | 0.00364 | 0.00358 | 0.00355 | 0.00356 | 0.00361 |
| 9A | 0.00366 | 0.00369 | 0.00363 | 0.00366 | 0.00357 | 0.00367 | 0.00365 |
| 10A | 0.00367 | 0.00375 | 0.00358 | 0.00367 | 0.00377 | 0.00367 | 0.00369 |
| 11A | 0.00368 | 0.00365 | 0.00360 | 0.00364 | 0.00363 | 0.00356 | 0.00363 |
| 12A | 0.00358 | 0.00366 | 0.00366 | 0.00364 | 0.00362 | 0.00360 | 0.00362 |

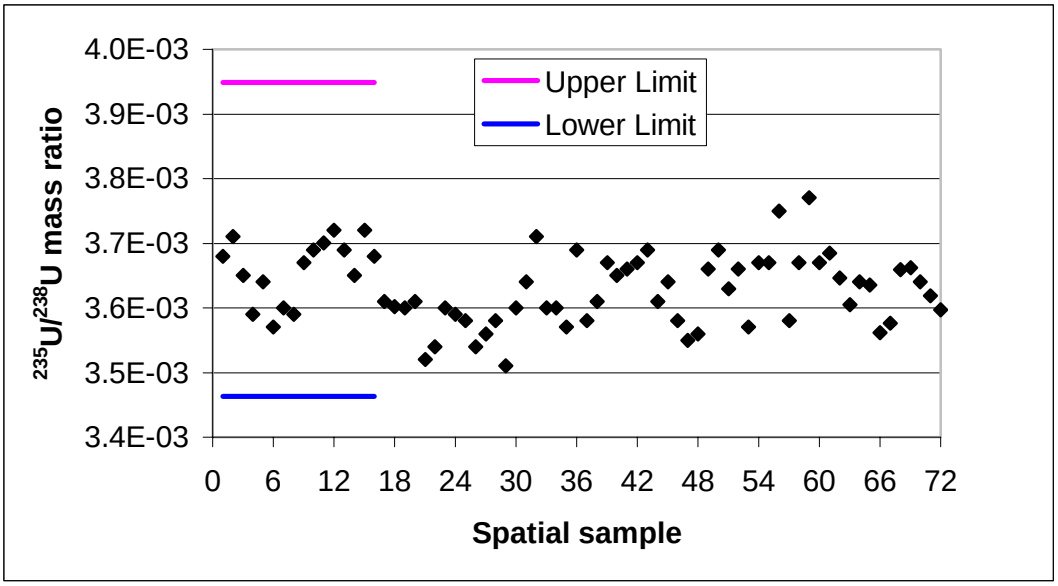


Figure 6.1: Isotopic analysis of the blended product shown with +/- standard deviation error band.

### 6.1.3 Product Size Distribution

The size distribution of pure NU sample, pure DU sample and NU+DU mixture (20:80 mass ratio) are shown in Figures 6.2, 6.3 and 6.4. The NU+DU mixture size distribution is the starting size distribution in all blending tests. The DU proportion being 80% of the mixture the size distribution of the NU+DU mixture is closer to the DU.

The size distributions of each test product at different conditions are given in Figures 6.4-6.15. The following points can be noted from these figures:

- the 50% passing size of the product (d50) reached about 8 microns.
- grinding with 2mm balls (Figure 6.7-6.9) gives finer and narrow size product compared to the 3mm balls (Figure 6.4-6.6). This is due to more ball to particles collisions with 2mm compared to the 3mm. In addition the pore size with 3mm balls being larger, the particles can escape the collisions among balls.

- when the void filling increased from 50% to 75%, the product size distribution become much coarser (Figure 6.10-6.11). This is due to crowding of particles which reduces the ball to particle contact.
- when the mill critical speed was increased to 70% from 63%, the product becomes finer (Figure 6.12-14) in relatively less grind time.
- with progressive increase in grinding time, generally the product gets finer (Figure 6.15). In some instances, excessive grinding can result in negative grinding or agglomeration of ground particles.

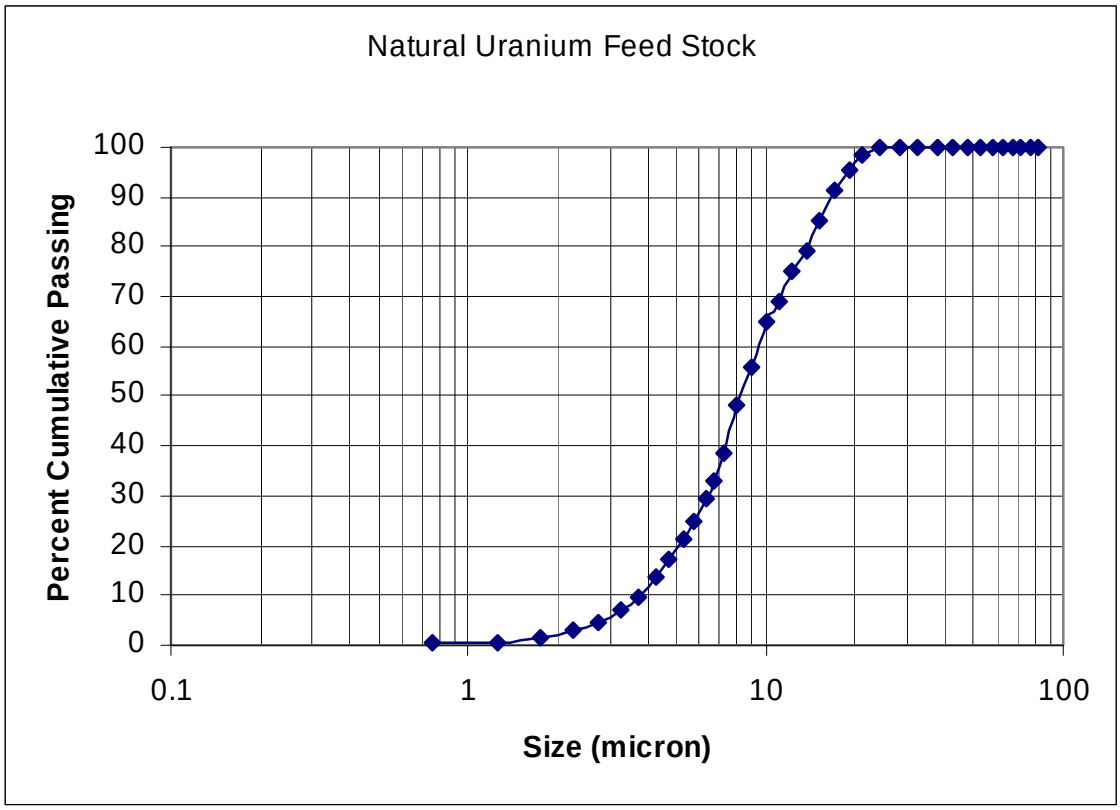


Figure 6.2: The size analysis of the natural uranium (NU) feed stock sample.

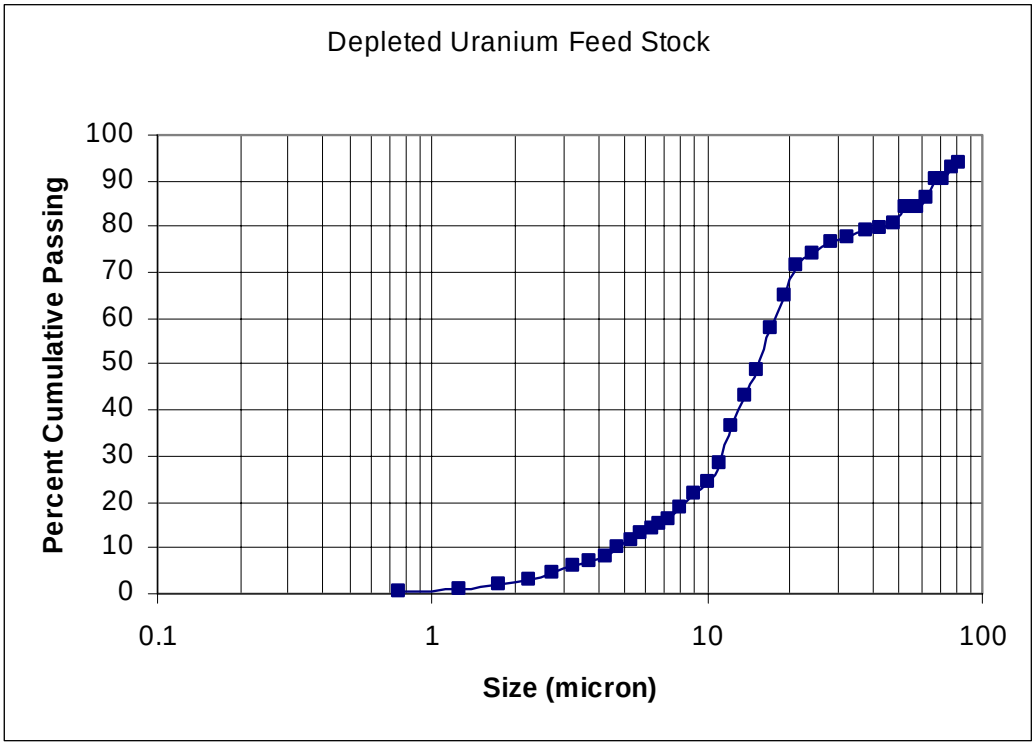


Figure 6.3: The size analysis of the depleted uranium (DU) feed stock sample.

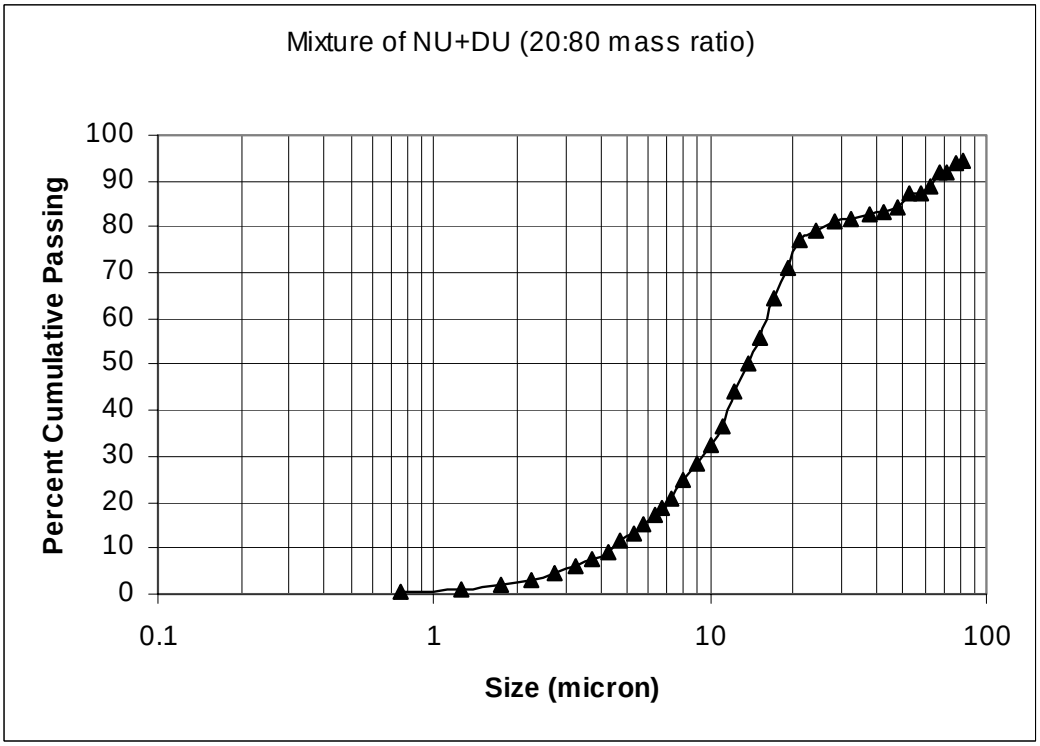


Figure 6.4: The size analysis of the NU+DU mixture (20:80 mass ratios).

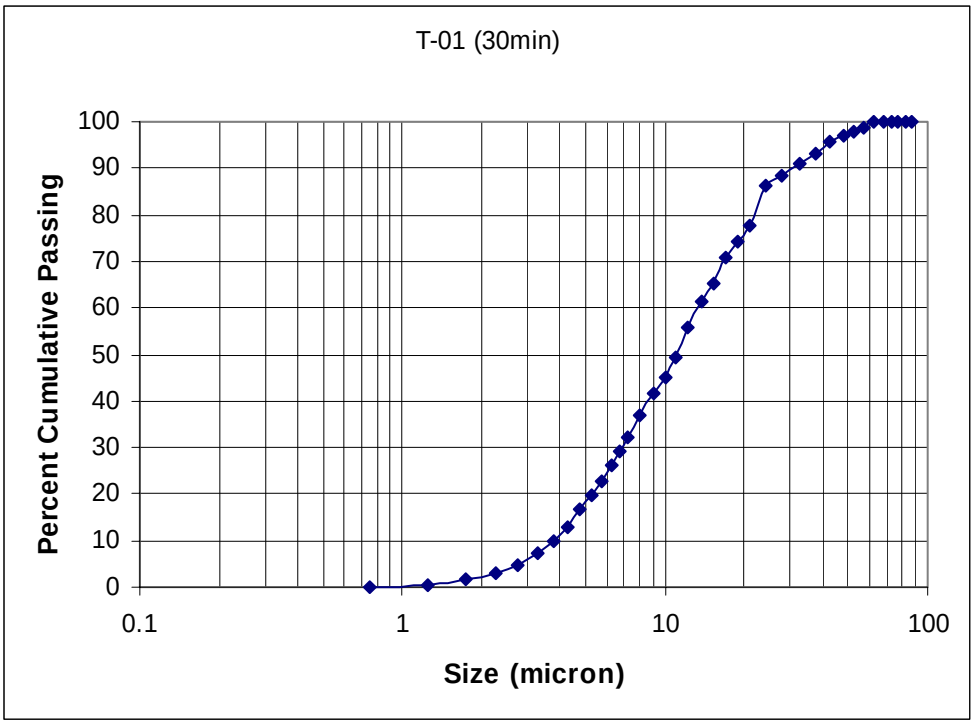


Figure 6.5: Product size distribution of Test No.1A

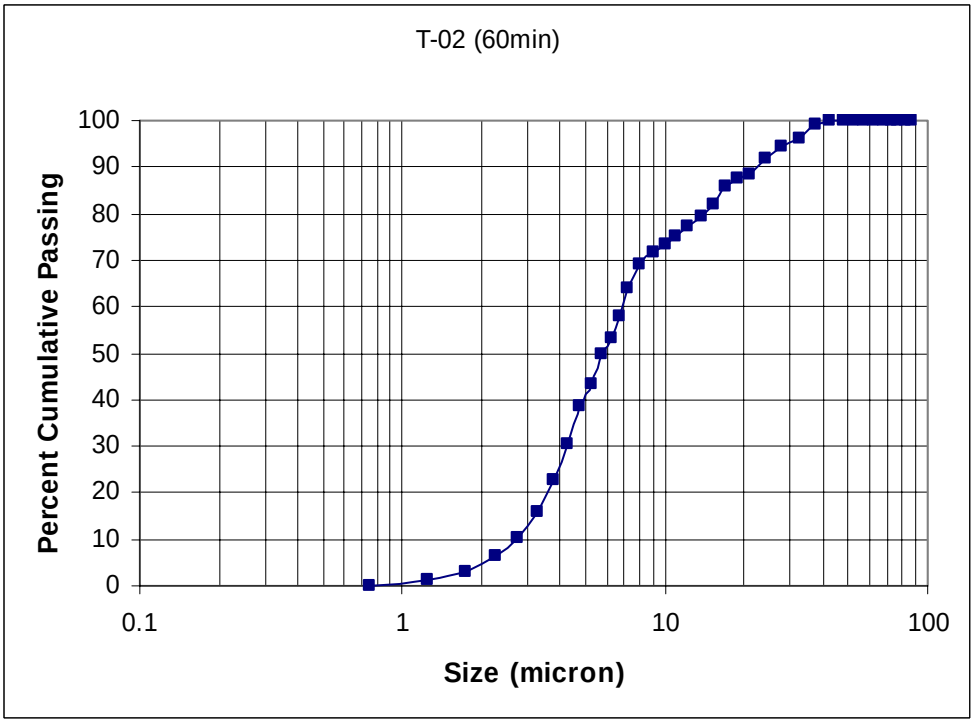


Figure 6.6: Product size distribution of Test No.2A

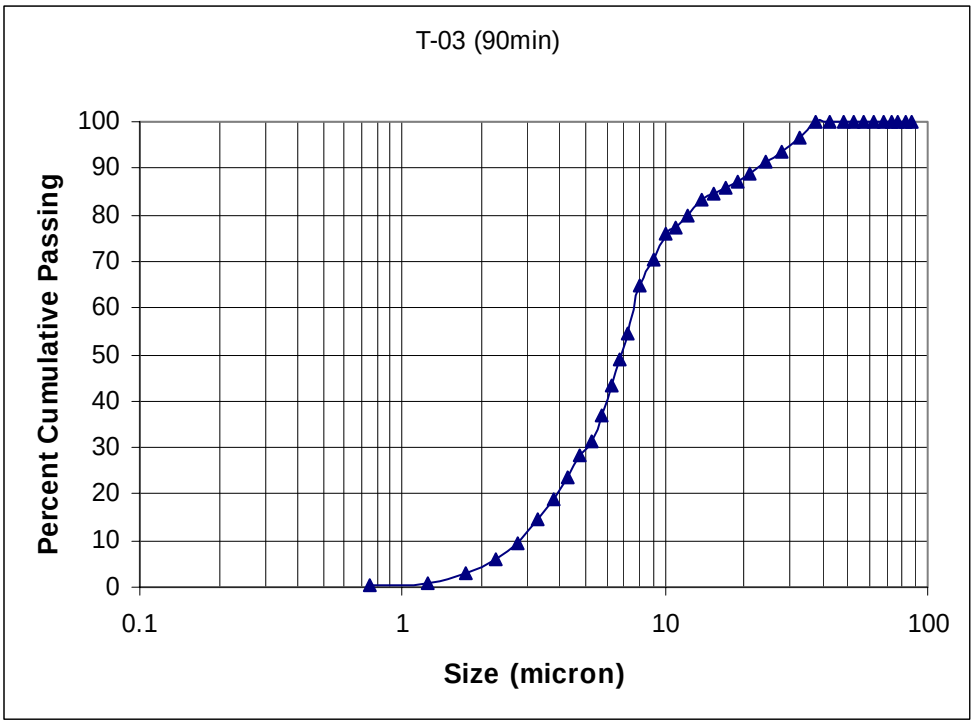


Figure 6.7: Product size distribution of Test No.3A

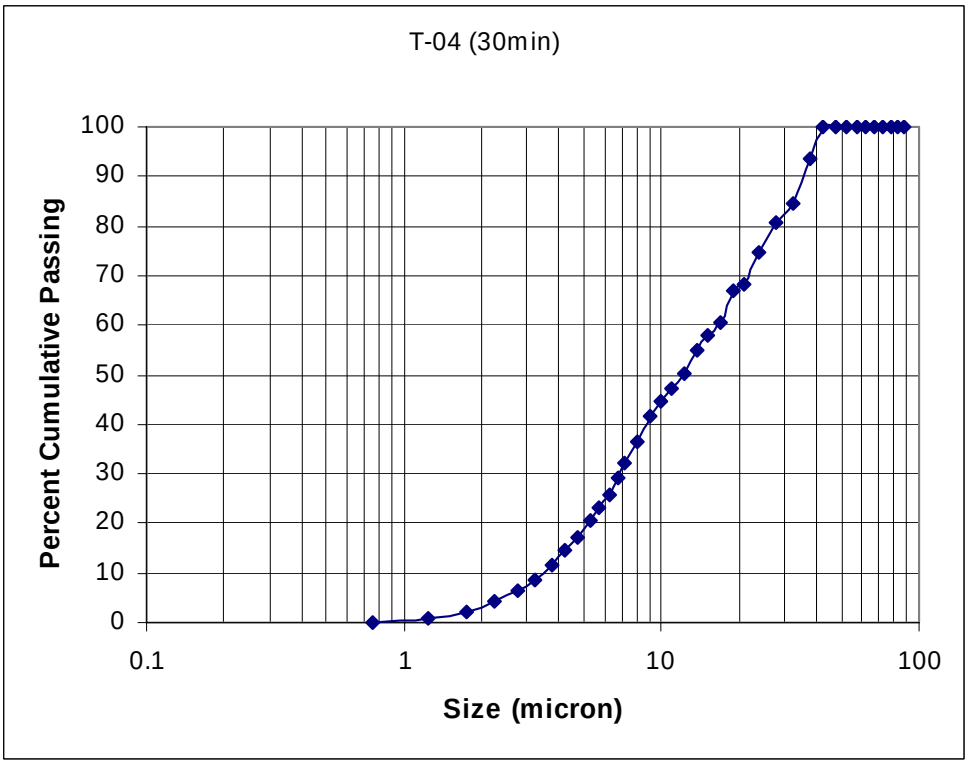


Figure 6.8: Product size distribution of Test No.4A

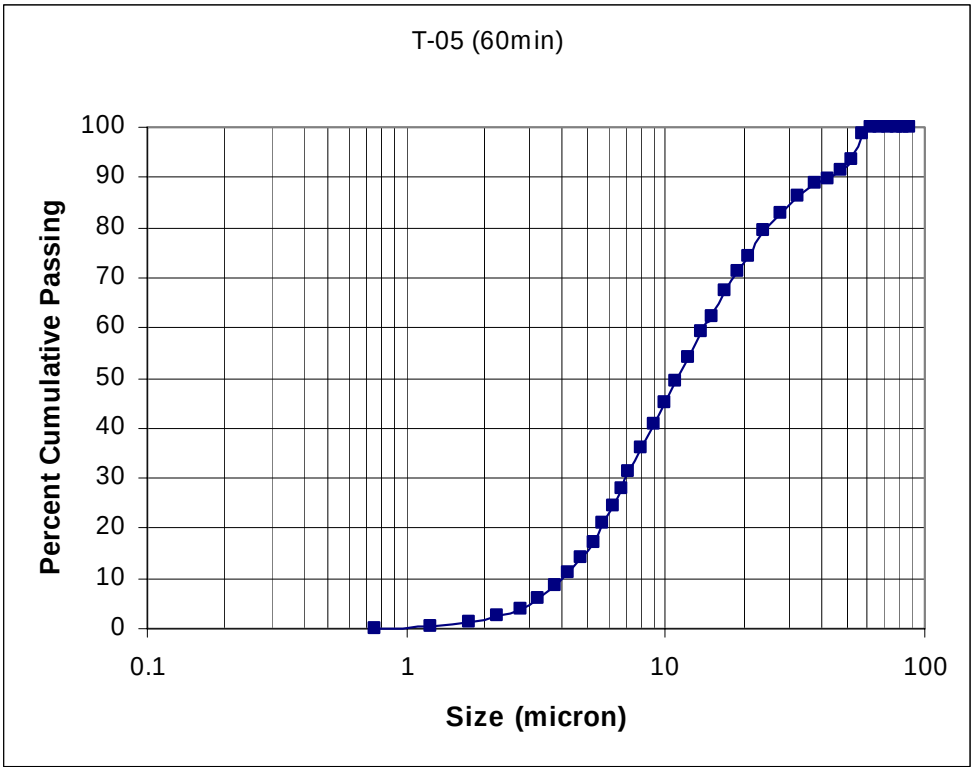


Figure 6.9: Product size distribution of Test No.5A

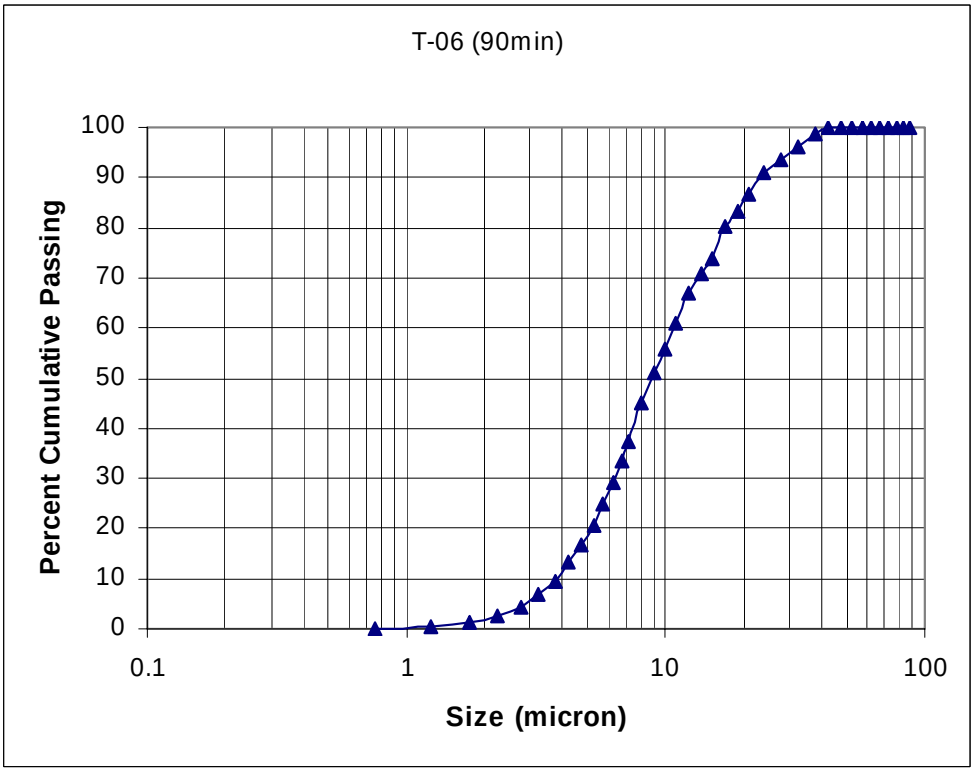


Figure 6.10: Product size distribution of Test No.6A

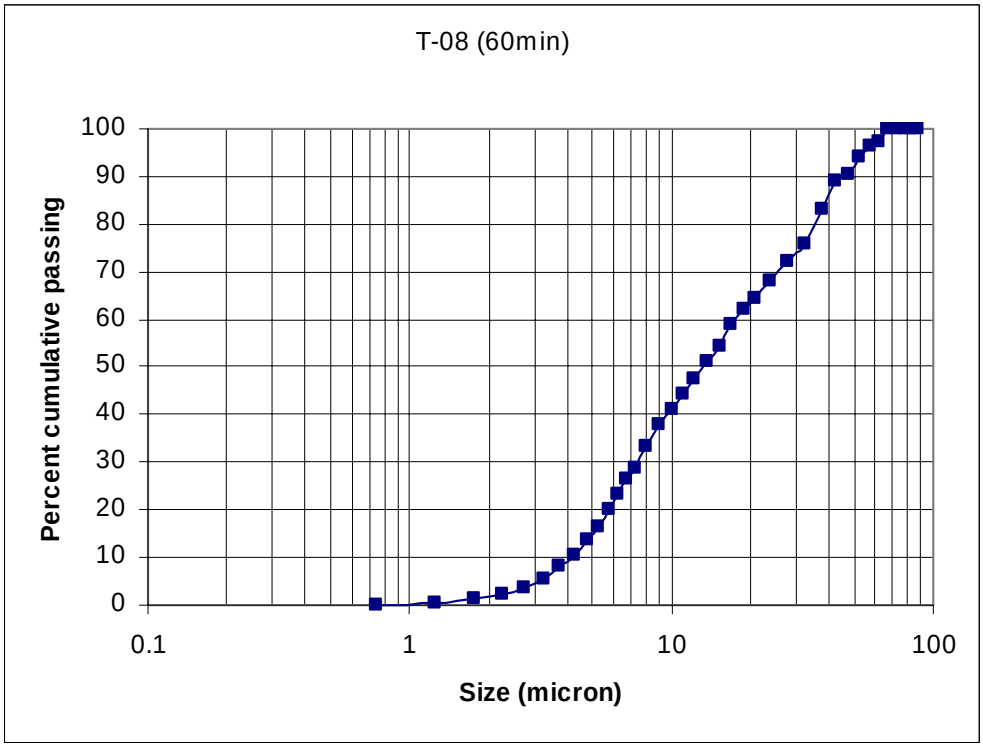


Figure 6.11: Product size distribution of Test No.8A

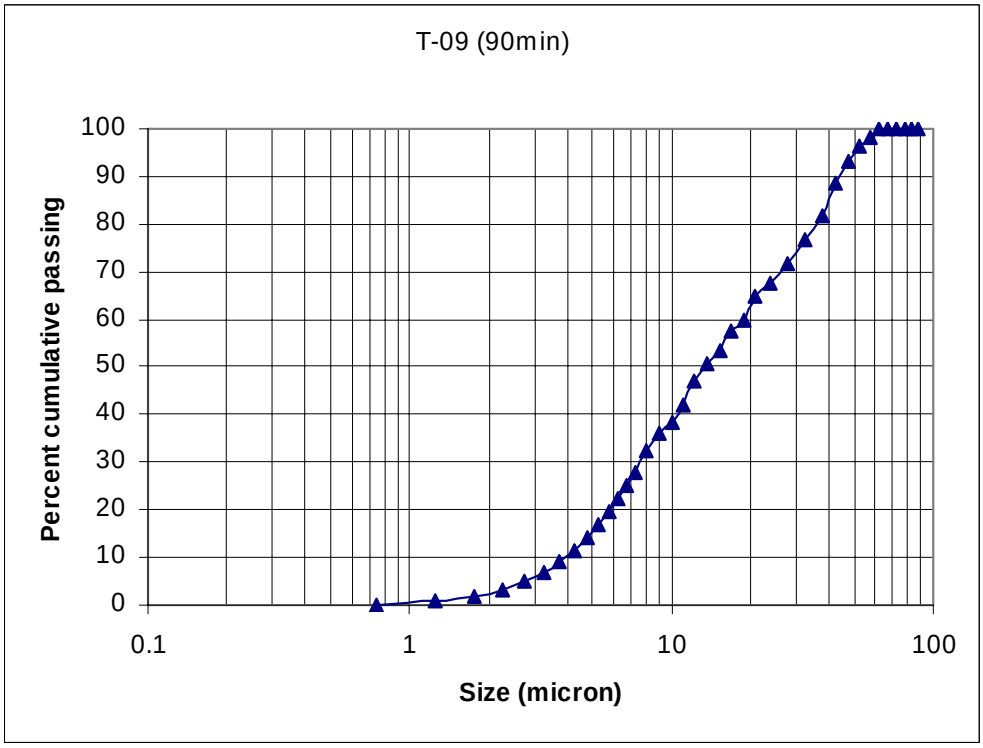


Figure 6.12: Product size distribution of Test No.9A

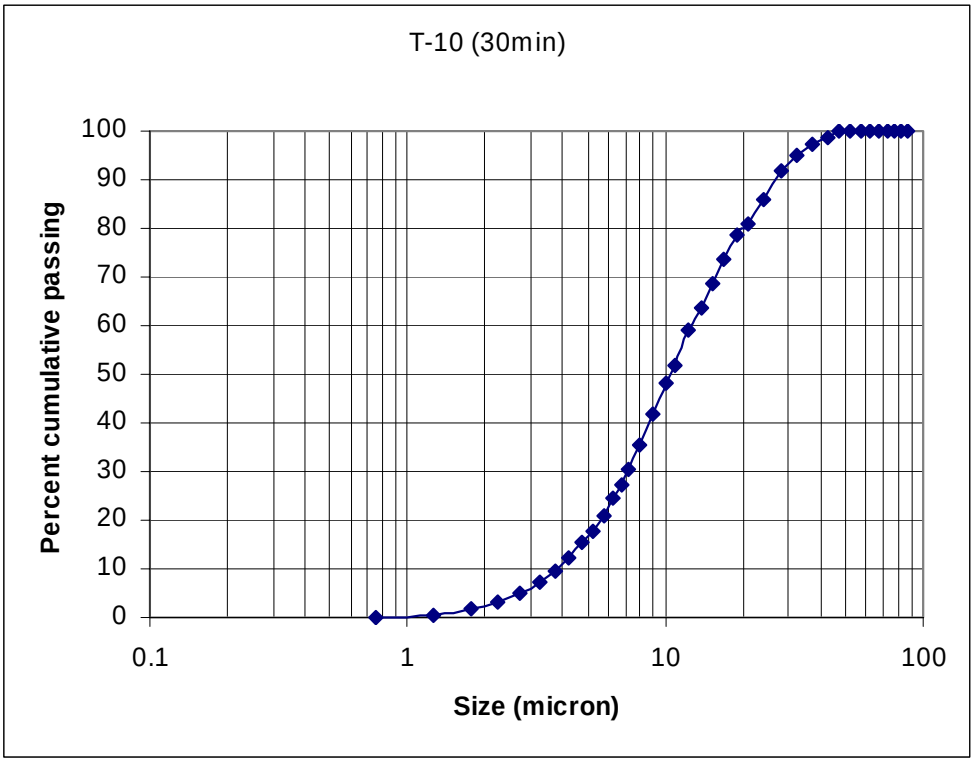


Figure 6.13: Product size distribution of Test No.10A

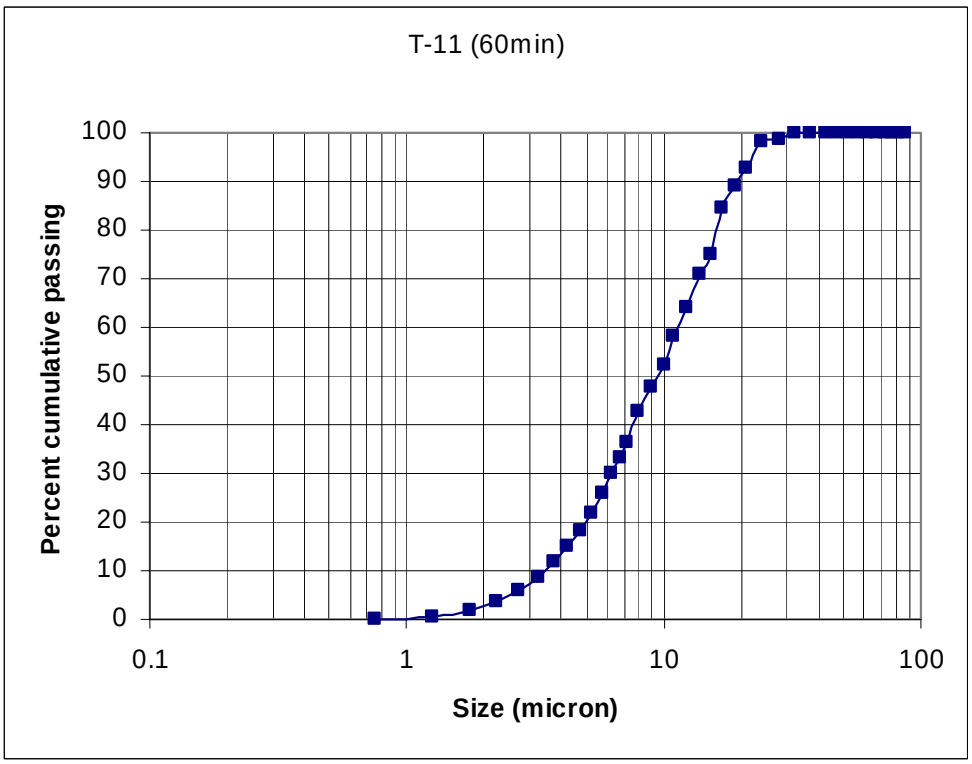


Figure 6.14: Product size distribution of Test No.11A

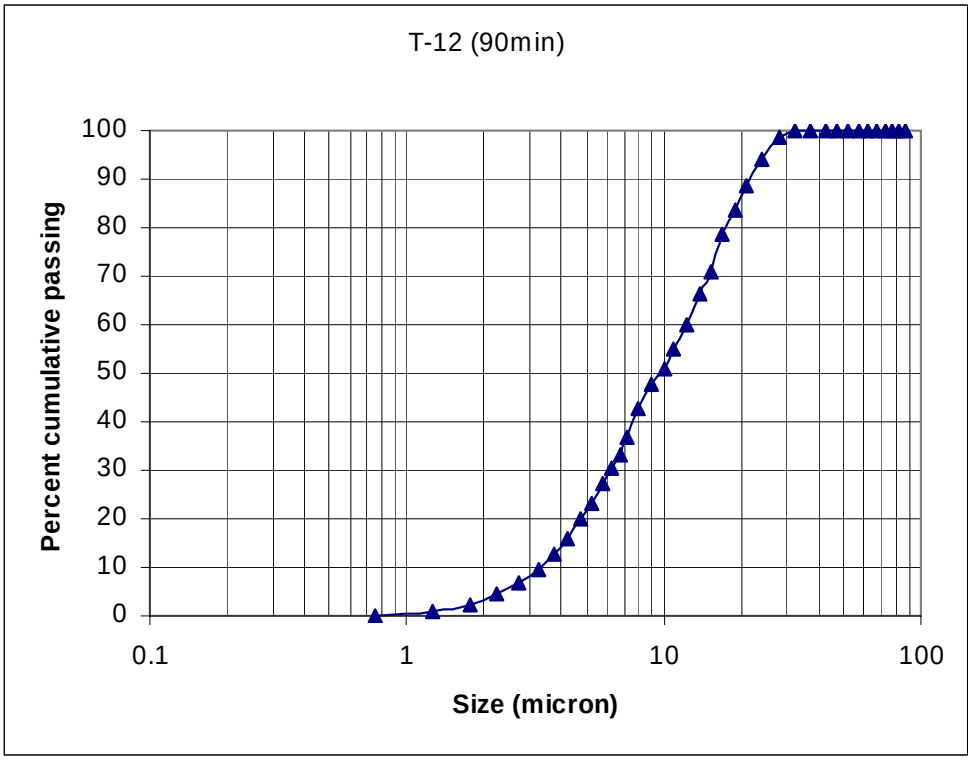


Figure 6.15: Product size distribution of Test No.12A

### 6.1.4 Conclusion and Discussion

The test work with RM-2 technology using same oxides of NU and DU samples was carried out. It is concluded that homogenous blending, as well as grinding of the product to a finer size can be achieved. The results have also indicated that 2mm balls produce finer blended product. In particular, al of the 72 spatial sample compositions (in 12 tests) fell within the upper and lower bounds established for such composition. The product size gets coarser with increase in powder filling fraction in grinding media. Increase in grinding time may increase the product fineness, if required. The major advantages of the RM-2 process are fast grinding time, simple design and optimized design. These features make it significantly less costly than utilizing large-scale aqueous processes for disposal of small amounts of fissile material. This process may be able to

provide a treatment that would reduce transportation costs, reduce the demand on safe and secure transportation equipment and reduce security cost for down blended uranium oxides.

## 6.2 Blending Tests with Mixed Oxides

The results obtained from the blending tests carried out with the mixed oxide samples of natural uranium and depleted uranium are discussed in this section. This series of tests were carried out with the 850 grams of depleted uranium oxide received from INEEL, whose oxide is in $UO_2$ form which differs from depleted uranium sample used in previous tests. A total of 22 blending tests were planned and carried out. The objective of these tests was set to study the mill speed and mill filling which are expected to have greater effect on breakage kinetics and unit capacity.

The isotope analysis and particle size analysis of the blended products were done by ACTLab (1336 Sandhill Drive, Ancaster, Ontario, Canada L9G4V5). The $^{235}U$ isotope analysis was done using an inductively coupled plasma mass spectrometry (ICP-MS).

### 6.2.2 Isotopic Analysis

The repeated chemical analysis and the mean values of Natural Uranium (NU) and Depleted Uranium (DU) feed stock samples are shown in Tables 6.5 and 6.6.

Table 6.5: Chemical analysis of NU feed stock

| Sample No. | $^{235}U$ isotope (ppm) |
|---|---|
| 1 | 6,480 |
| 2 | 6,220 |
| 3 | 6,540 |
| 4 | 6,360 |
| 5 | 6,330 |
| Mean/average, $E(C_{NU})$ | 6,386 |
| Standard diviation ($\sigma_{NU}$) | 126.41 |

Table 6.6: Chemical analysis of DU feed stock

| **Sample No.** | **$^{235}$U isotope (ppm)** |
|---|---|
| 1 | 1780 |
| 2 | 1730 |
| 3 | 1740 |
| Mean/average, $E(C_{DU})$ | 1,750 |
| Standard diviation ($\sigma_{DU}$) | 26.46 |

In each blending test, NU and DU feed stock in the weight ratio 20:80, was used. Therefore in the blended product we expect the mean value of the $^{235}$U isotope to be given by the formula:

$$E(C_M) = 0.8E(C_{DU}) + 0.2E(C_{NU})$$
$$= 0.8 \text{ x } 1750 + 0.2 \text{ x } 6386$$
$$= 2677.2$$

Where E(..) denotes expected or mean value, $C_M$ stand for $^{235}$U isotope in the mixture, $C_{DU}$ denotes $^{235}$U isotope in the depleted uranium, $C_{NU}$ denotes the $^{235}$U isotope in natural uranium.

Therefore, we expect the blended mixture to show $^{235}$U isotope value of 2677.2. In a similar manner, the variability or standard deviation ($\sigma$) of the blended mixture is given by:

$$\sigma_M = \sqrt{\left(0.8^2 \sigma_{DU}{}^2\right) + \left(0.2^2 \sigma_{NU}{}^2\right)}$$
$$= \sqrt{\left(0.8^2 x 26.46^2\right) + \left(0.2^2 x 126.41^2\right)}$$
$$= 32.97$$

Where, the subscripts M, DU and NU denote mixture, depleted uranium and natural uranium respectively.

The overall error or composite error in the product analysis included the measurement error also. The measurement error refers to the error produced by Inductively Coupled Plasma Spectroscopy. Therefore the overall error is

$$\begin{aligned}\text{Overall Error} &= \pm\left(2\sigma_M + 0.05E(C_M)\right)\\ &= \pm\left(2\times 32.97 + 0.05\times 2677.2\right)\\ &= \pm 199.81\end{aligned}$$

Therefore we expect the experimental product isotope analysis to fall within a band given by

Upper limit = 2677.2 + 199.81 = 2877.01

Lower limit = 2677.2 - 199.81 = 2477.39

The experimental conditions of each test carried out with mixed oxide samples of NU and DU are presented in Table 6.7. The $^{235}$U isotope values of the representative samples taken from each test product are also given in Table 6.7. Figure 6.16 shows a plot of the $^{235}$U isotope analysis in each of the tests with the expected upper and lower bounds. Besides analyzing one sample for each of the 22 tests, 2 additional samples from 6 randomly chosen tests were analyzed. This makes the total number of samples analyzed to 34 and all of these data points are shown in Figure 6.16. It is seen that all of the points fall within the upper and lower limits which implies that blending is complete in all samples. Hence, we conclude that the entire mixture in the canister is completely blended.

Table 6.7: RM-2 mill operating conditions and $^{235}U$ isotope results of tests with mixed oxide samples.

| Test No | Ball Size (mm) | Ball Filling (%) | % Critical Speed | Grind Time (min) | $^{235}U$ Isotope (ppm) | | |
|---|---|---|---|---|---|---|---|
| | | | | | Sample1 | Sample2 | Sample3 |
| 1B | 3 | 20 | 63 | 30 | 2520 | - | - |
| 2B | 3 | 20 | 63 | 60 | 2560 | 2540 | 2620 |
| 3B | 3 | 20 | 63 | 90 | 2560 | - | - |
| 4B | 3 | 20 | 70 | 30 | 2610 | - | - |
| 5B | 3 | 20 | 70 | 60 | 2550 | - | - |
| 6B | 3 | 20 | 70 | 90 | 2620 | - | - |
| 7B | 2 | 20 | 78 | 30 | 2620 | - | - |
| 8B | 2 | 20 | 78 | 60 | 2670 | 2640 | 2600 |
| 9B | 2 | 20 | 78 | 90 | 2620 | - | - |
| 10B | 2 | 20 | 78 | 150 | 2650 | 2770 | 2600 |
| 11B | 2 | 30 | 63 | 30 | 2590 | - | - |
| 12B | 2 | 30 | 63 | 60 | 2710 | - | |
| 13B | 2 | 30 | 63 | 90 | 2520 | - | - |
| 14B | 2 | 30 | 63 | 150 | 2640 | 2650 | 2590 |
| 15B | 2 | 30 | 70 | 30 | 2660 | - | |
| 16B | 2 | 30 | 70 | 60 | 2620 | - | - |
| 17B | 2 | 30 | 70 | 90 | 2660 | 2640 | 2620 |
| 18B | 2 | 30 | 70 | 150 | 2620 | - | - |
| 19B | 2 | 30 | 78 | 30 | 2640 | - | - |
| 20B | 2 | 30 | 78 | 60 | 2710 | - | - |
| 21B | 2 | 30 | 78 | 90 | 2620 | - | - |
| 22B | 2 | 30 | 78 | 150 | 2650 | 2640 | 2590 |

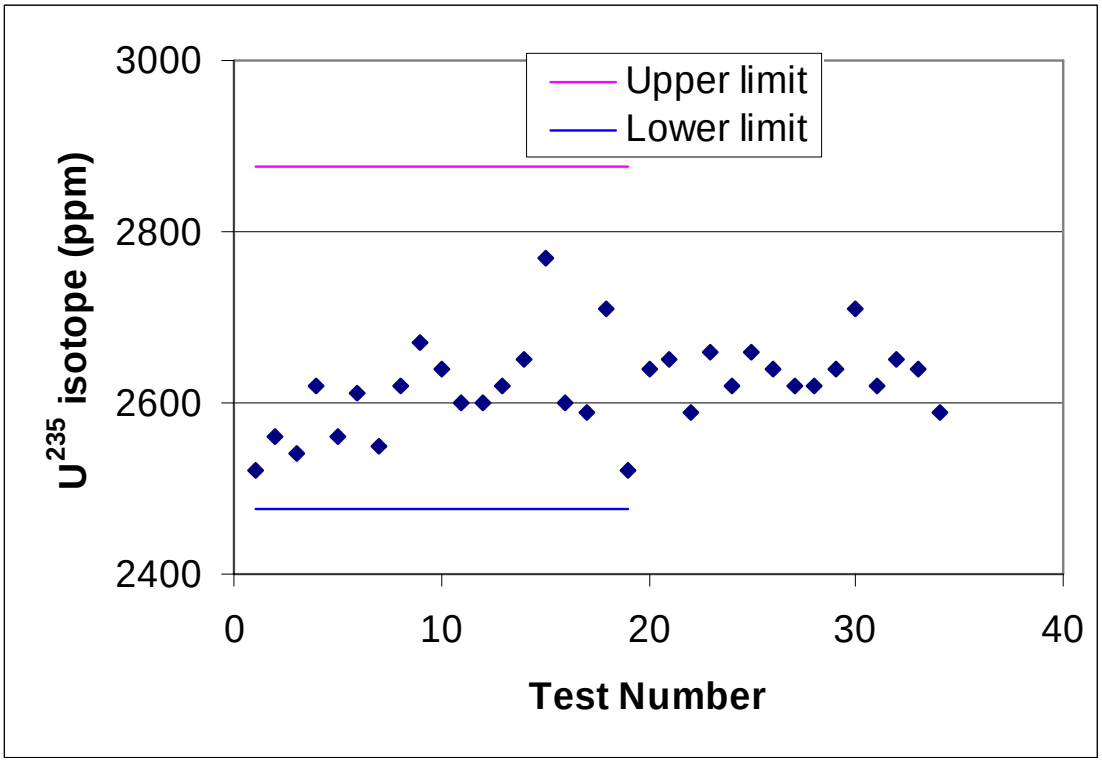


Figure 6.16: $^{235}U$ isotopic analysis of the blended products shown with upper and lower standard deviation error bounds.

### 6.2.3 Product Size Distribution

Figure 6.17 and Figure 6.18 shows the particle size distribution of NU and DU feed stock samples while Figure 6.19 shows the size distribution of NU+DU mixture blended in 20:80 weight ratios. The size distribution of DU is very fine with 100% passing size of about 6 microns. The proportion of DU being 80% in the mixture, the size distribution of NU+DU was closer to the DU with 50% passing size of about 5 microns.

The size distributions of the test products at different conditions are given in Figures 6.20-6.41. The following points are noted from these figures:

- Negative grinding is very prominent in most of the blending tests.
- Often the 50% passing size (d50) of the product reaches about 10 microns, which is coarser than the feed size.
- The negative grinding is more prominent with 3mm balls compared to the blending tests with 2 mm. The pore size being larger in 3 mm compared to the 2mm balls, the finer feed articles can escape the pressure points in grinding media.
- When the mill filling increased from 20% to 30%, the product size distribution becomes relatively finer. This is due to crowding of particles which reduces the ball to ball contact and increases the ball to particle contact.
- Increase in mill critical speed produces finer product with relatively lower negative grinding.
- With progressive increase in grinding time, initially the product gets finer and then gets coarser which may be due to negative grinding.

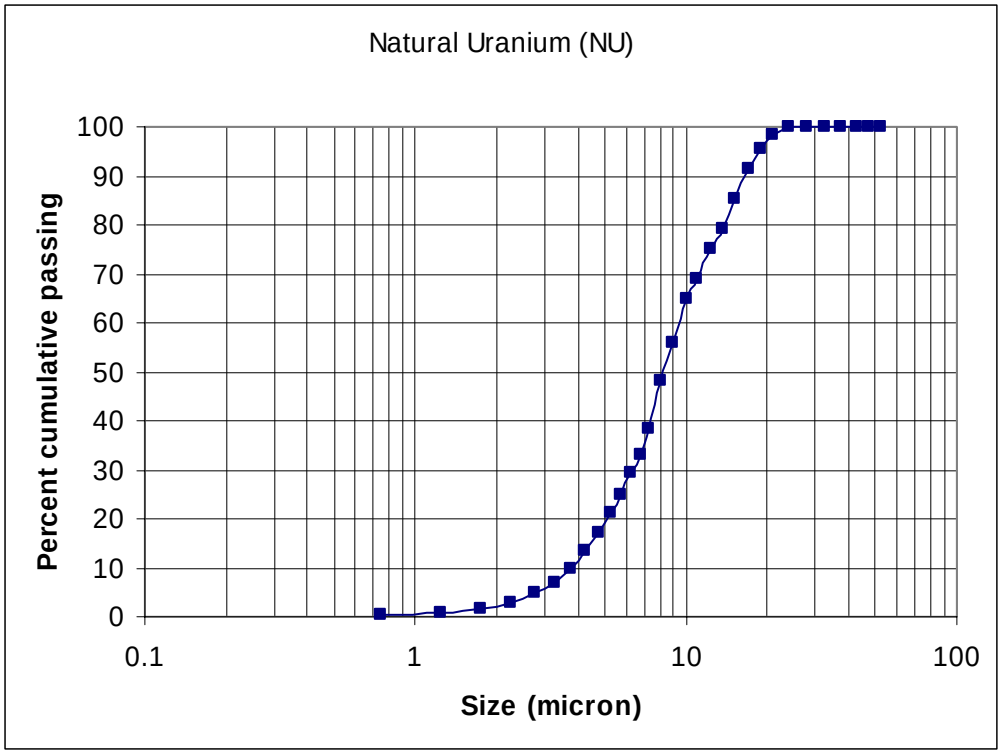


Figure 6.17: The size analysis of the Natural Uranium feed stock sample.

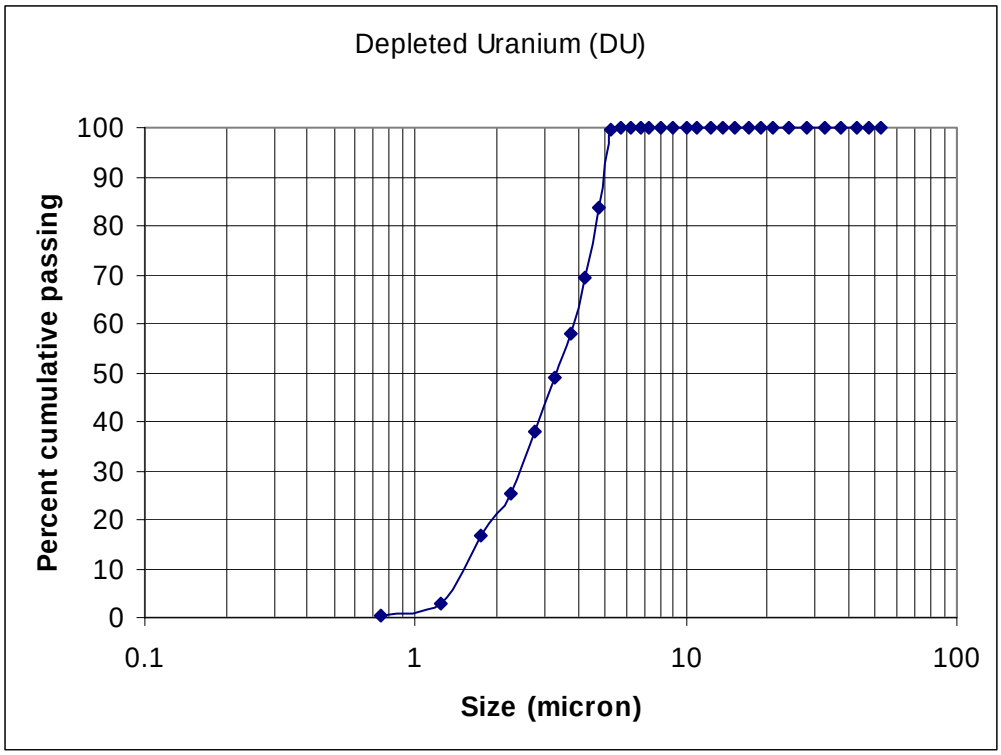


Figure 6.18: The size analysis of the depleted uranium ($UO_2$ form) stock sample.

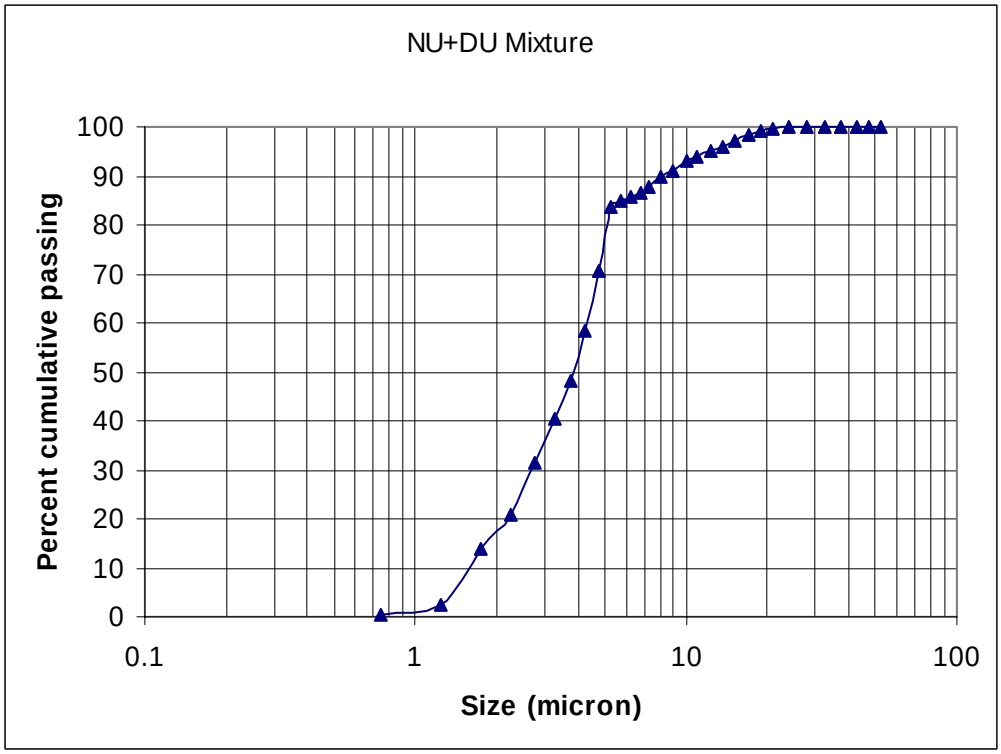


Figure 6.19: The size analysis of the NU+DU mixture (20:80 weight ratios).

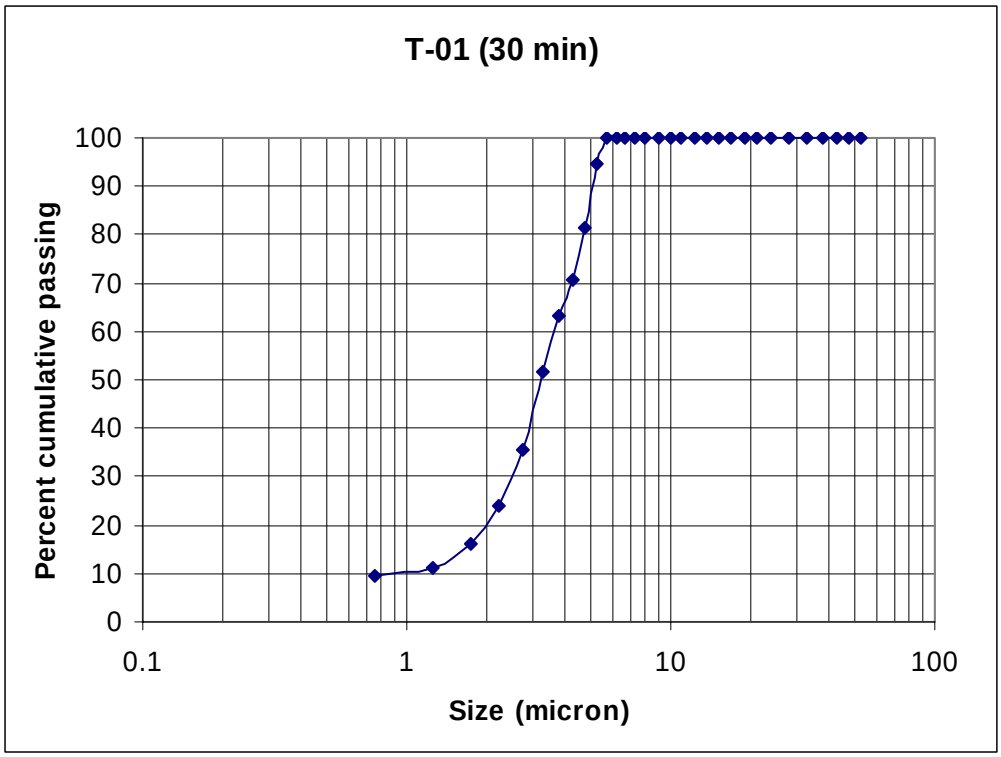


Figure 6.20: Product Size distribution of Test -01B.

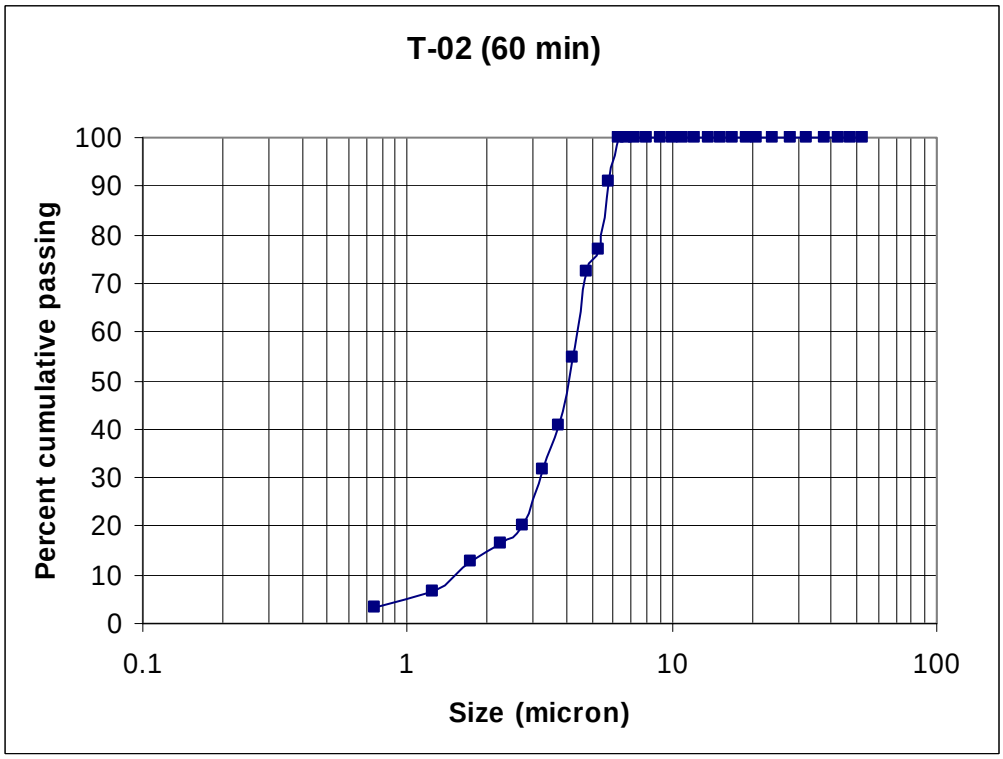


Figure 6.21: Product Size distribution of Test -02B.

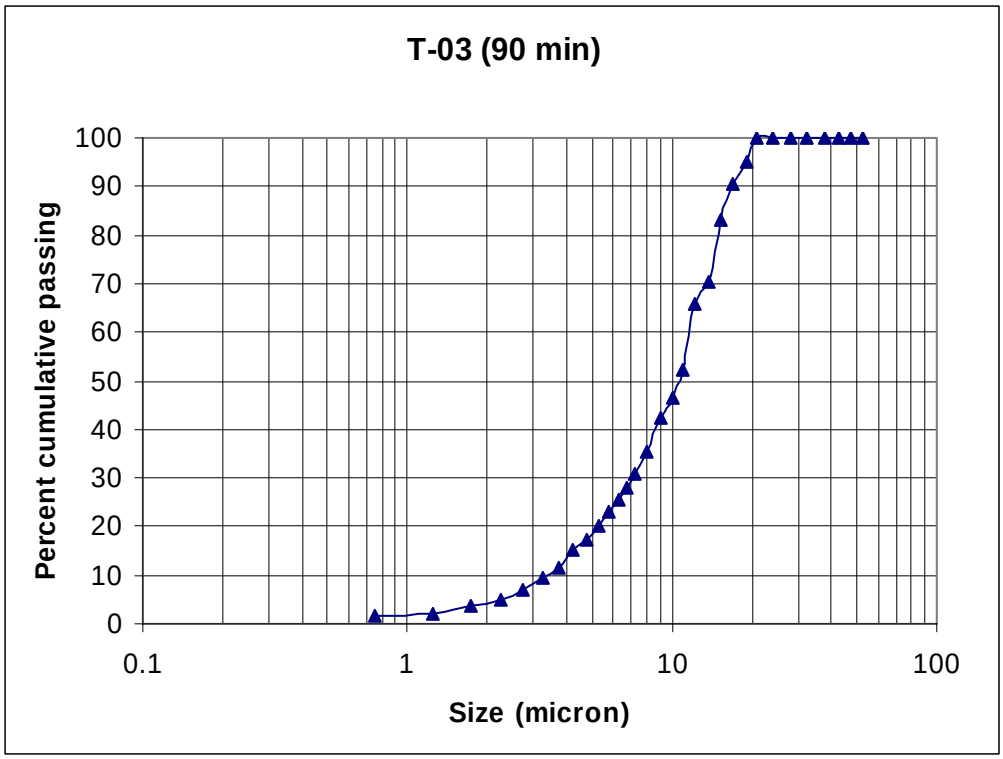


Figure 6.22: Product Size distribution of Test -03B

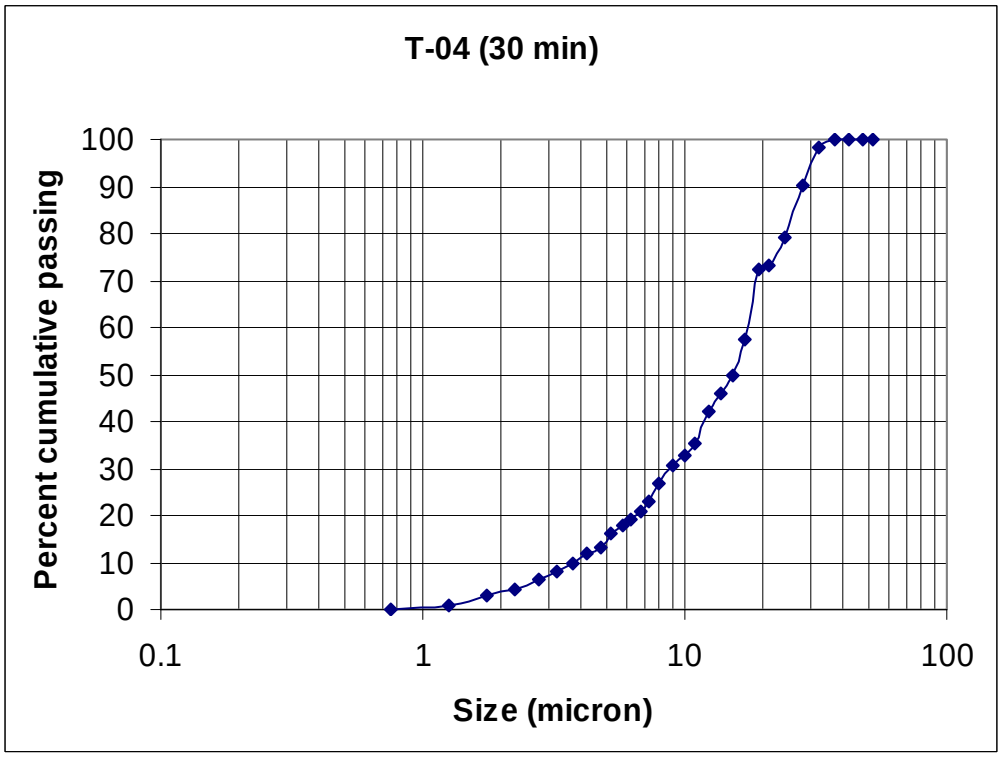


Figure 6.23: Product Size distribution of Test -04B

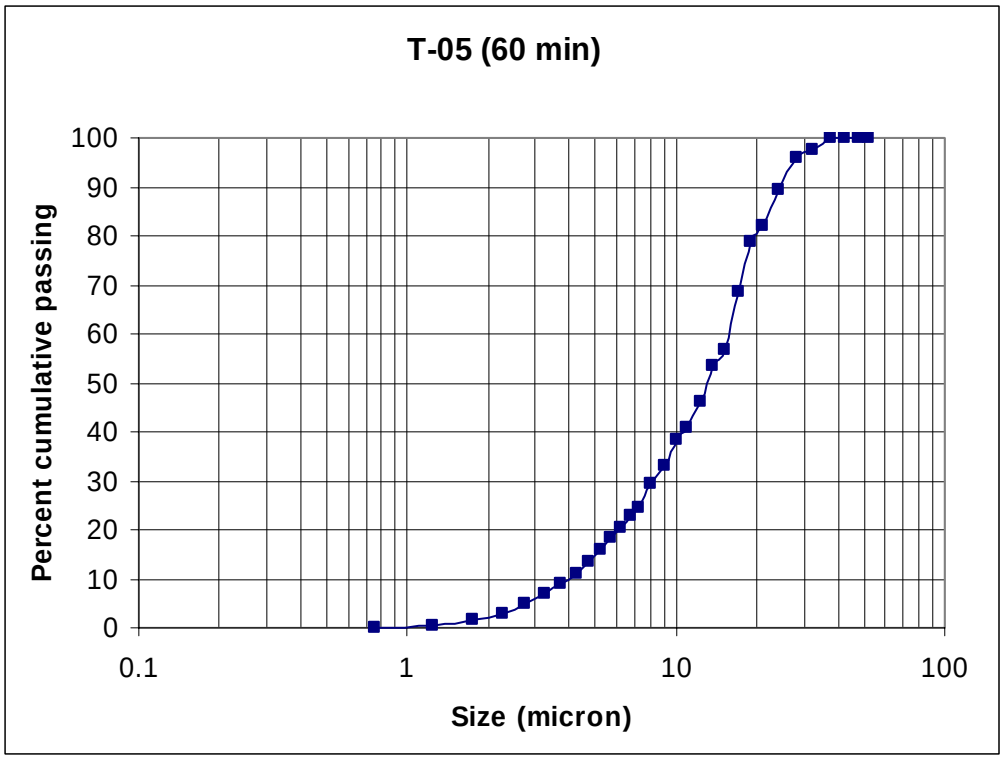


Figure 6.24: Product Size distribution of Test -05B

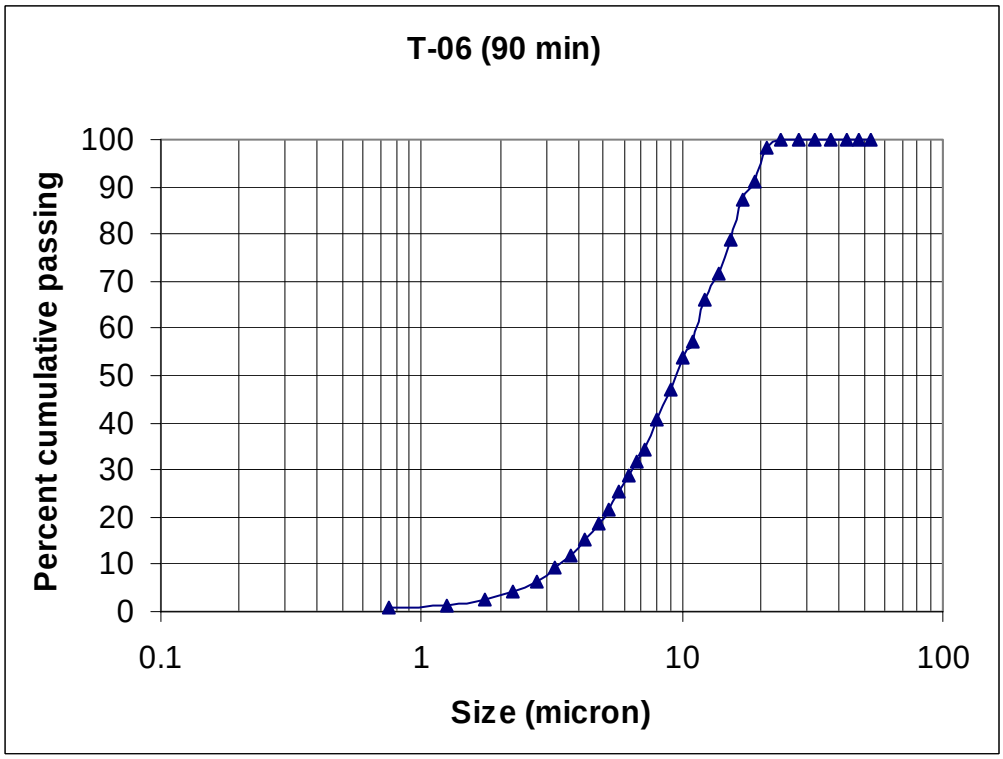


Figure 6.25: Product Size distribution of Test -06B

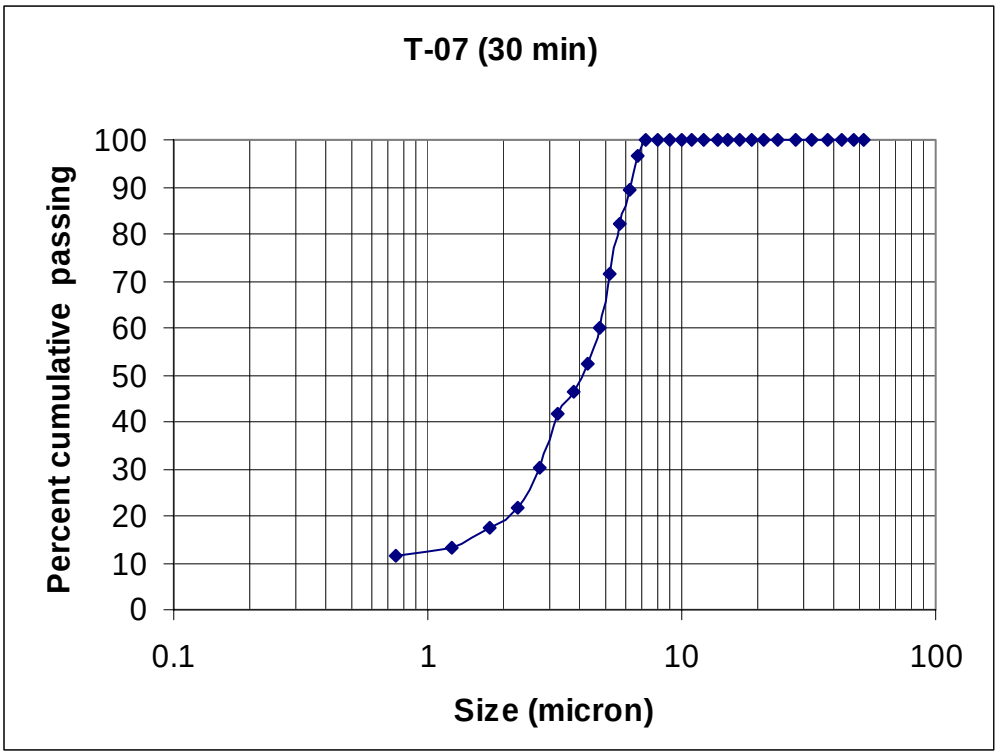


Figure 6.26: Product Size distribution of Test -07B.

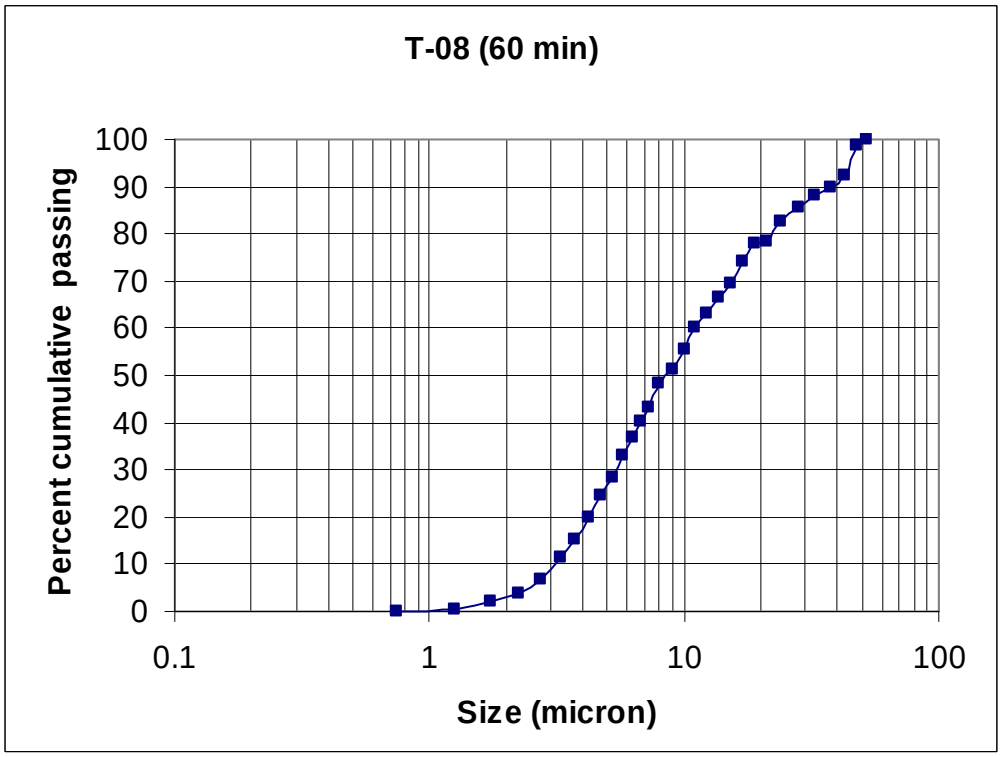


Figure 6.27: Product Size distribution of Test -08B.

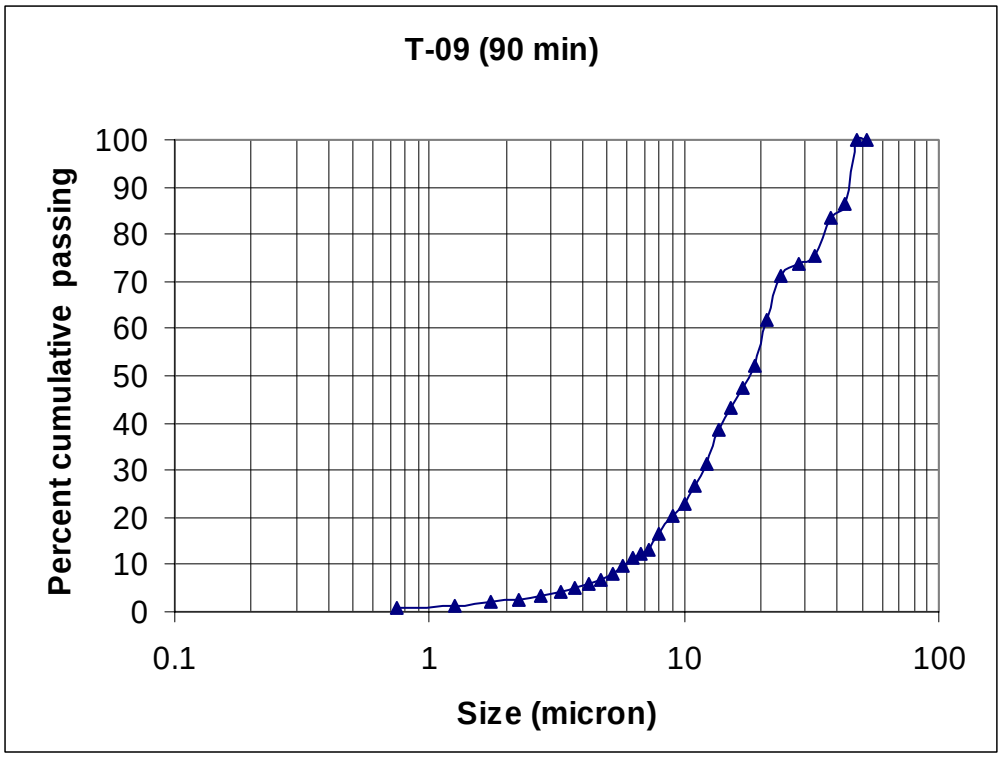


Figure 6.28: Product Size distribution of Test -09B.

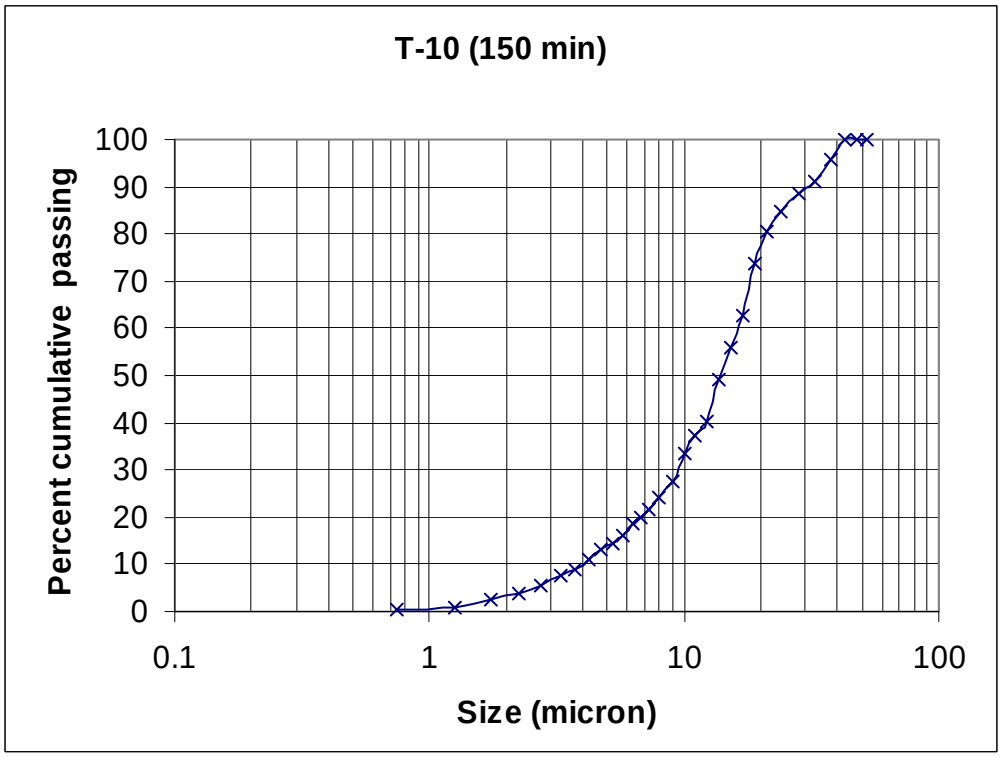


Figure 6.29: Product Size distribution of Test -10B.

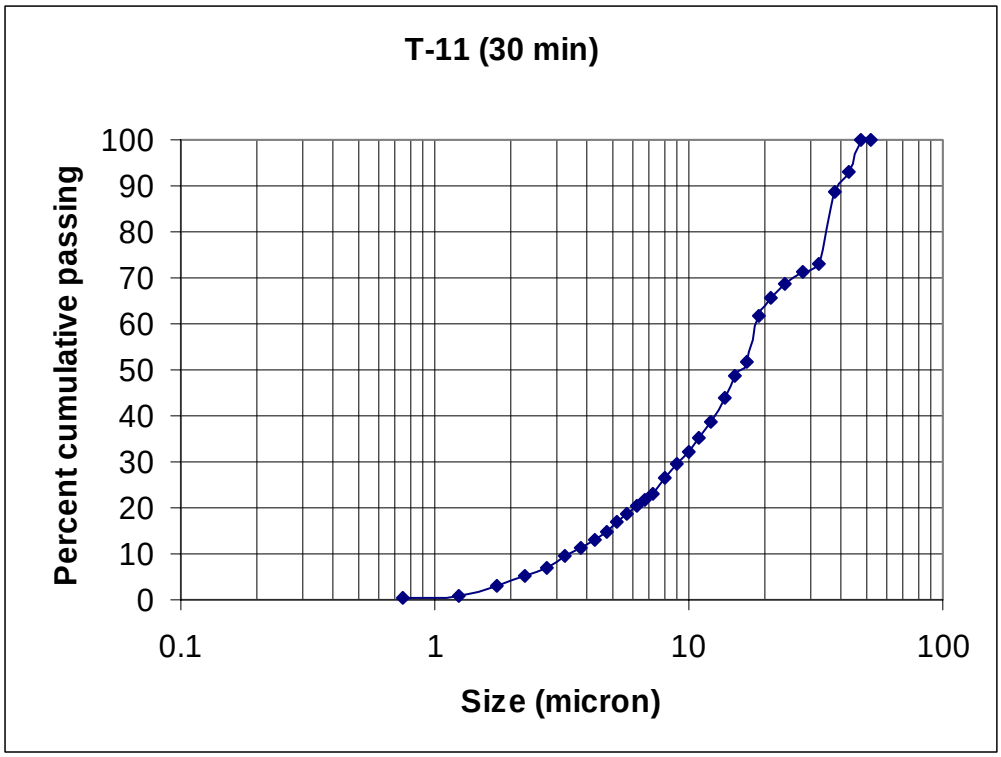


Figure 6.30: Product Size distribution of Test -11B.

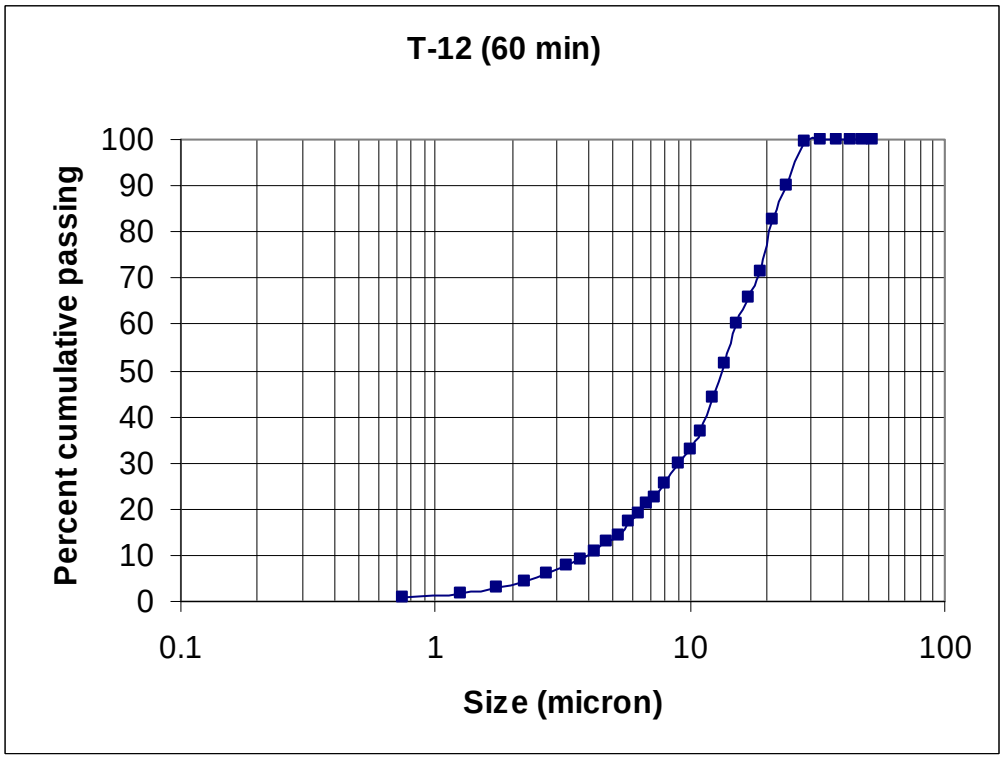


Figure 6.31: Product Size distribution of Test -12B.

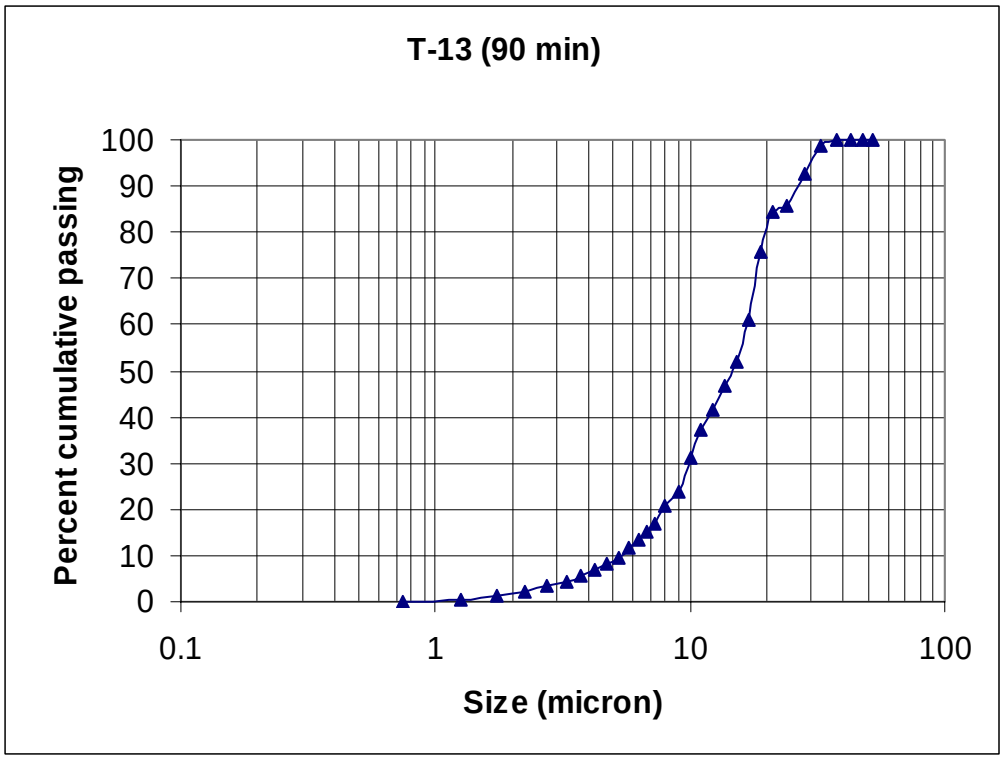


Figure 6.32: Product Size distribution of Test -13B.

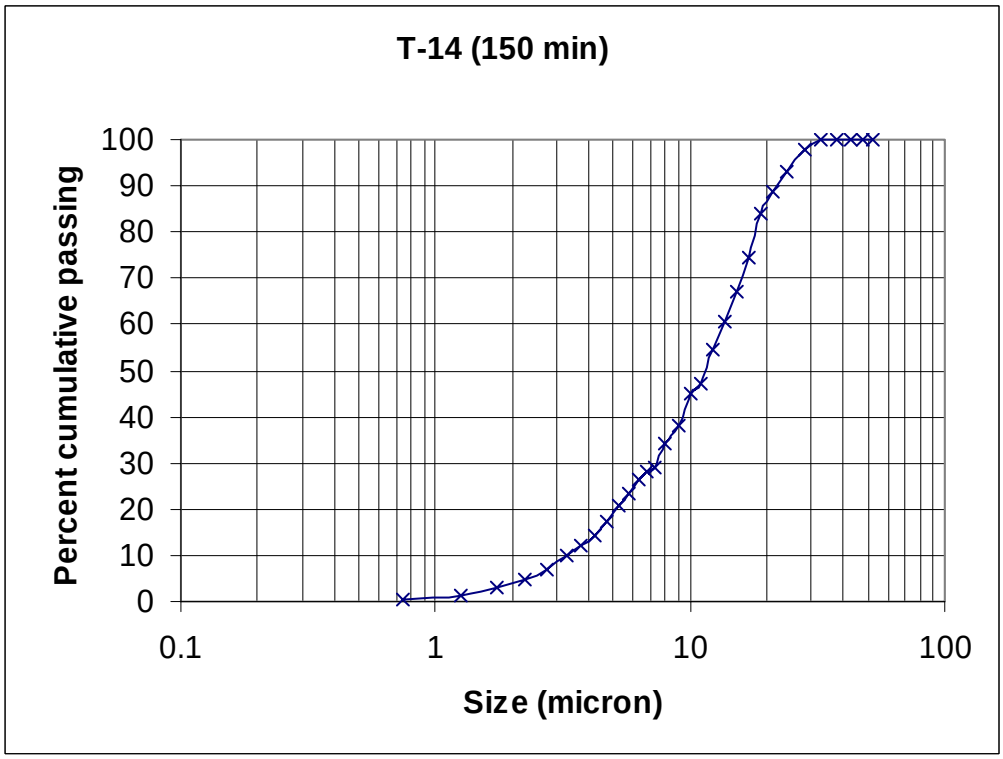


Figure 6.33: Product Size distribution of Test -14B.

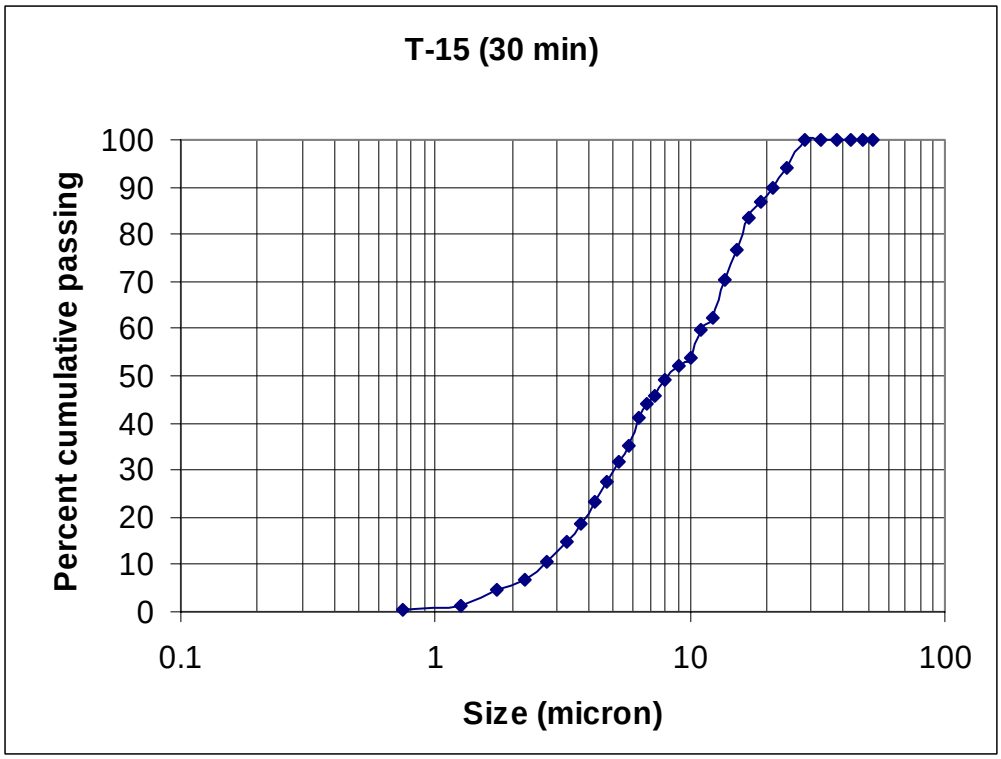


Figure 6.34: Product Size distribution of Test -15B.

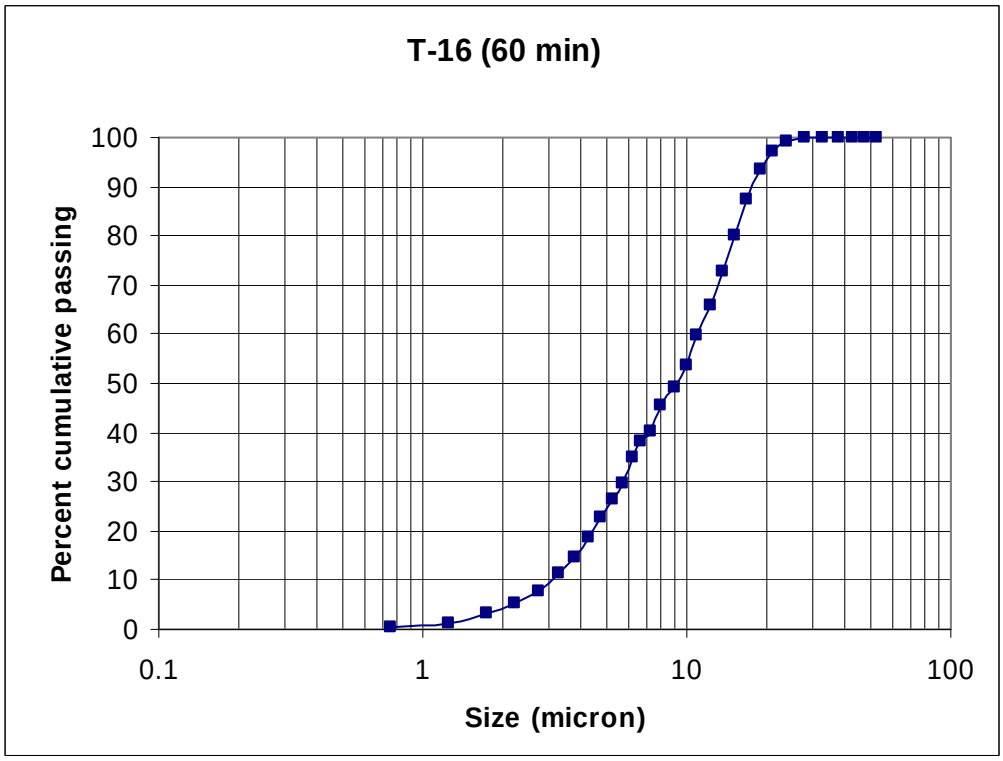


Figure 6.35: Product Size distribution of Test -16B.

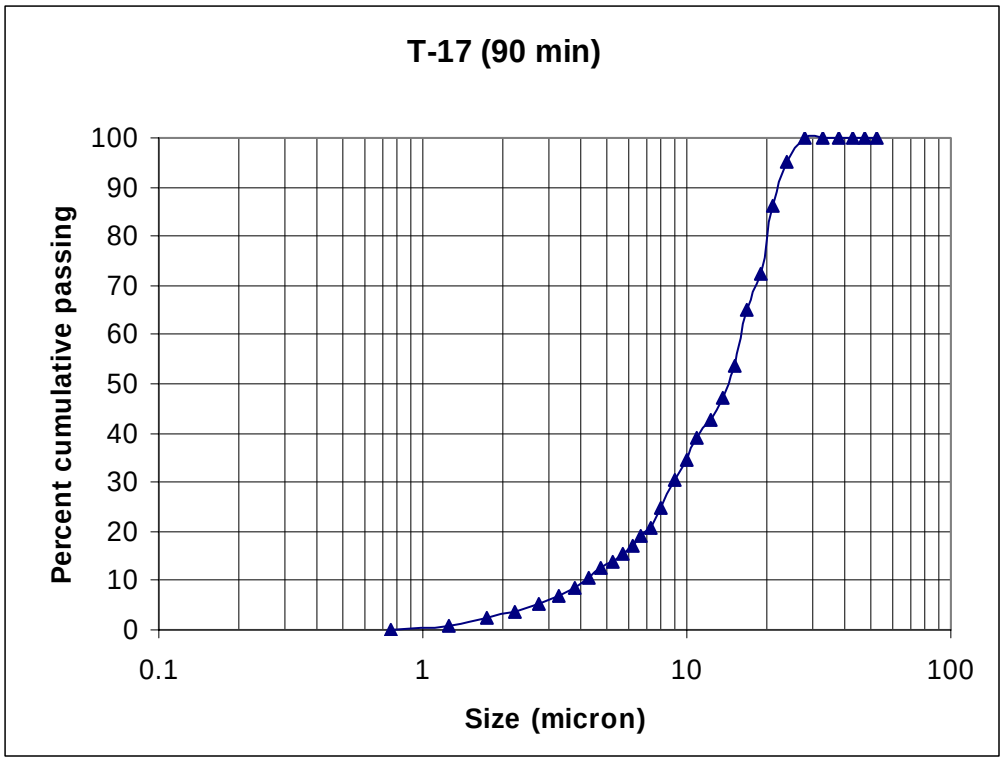


Figure 6.36: Product Size distribution of Test -17B.

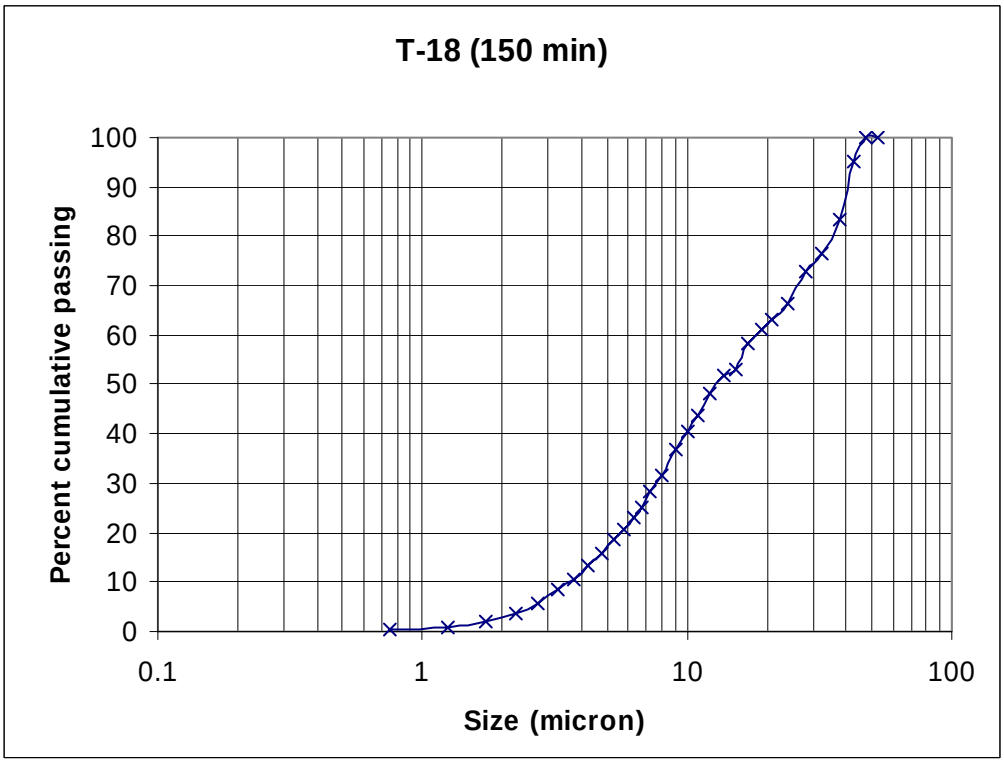


Figure 6.37: Product Size distribution of Test -18B.

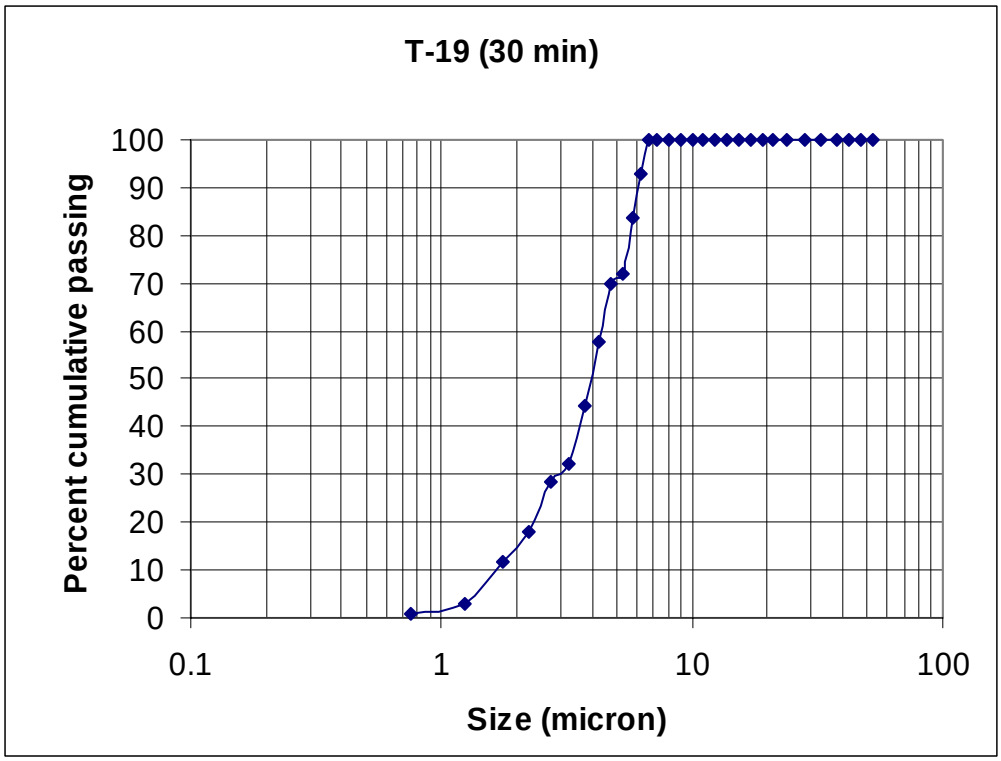


Figure 6.38: Product Size distribution of Test -19B.

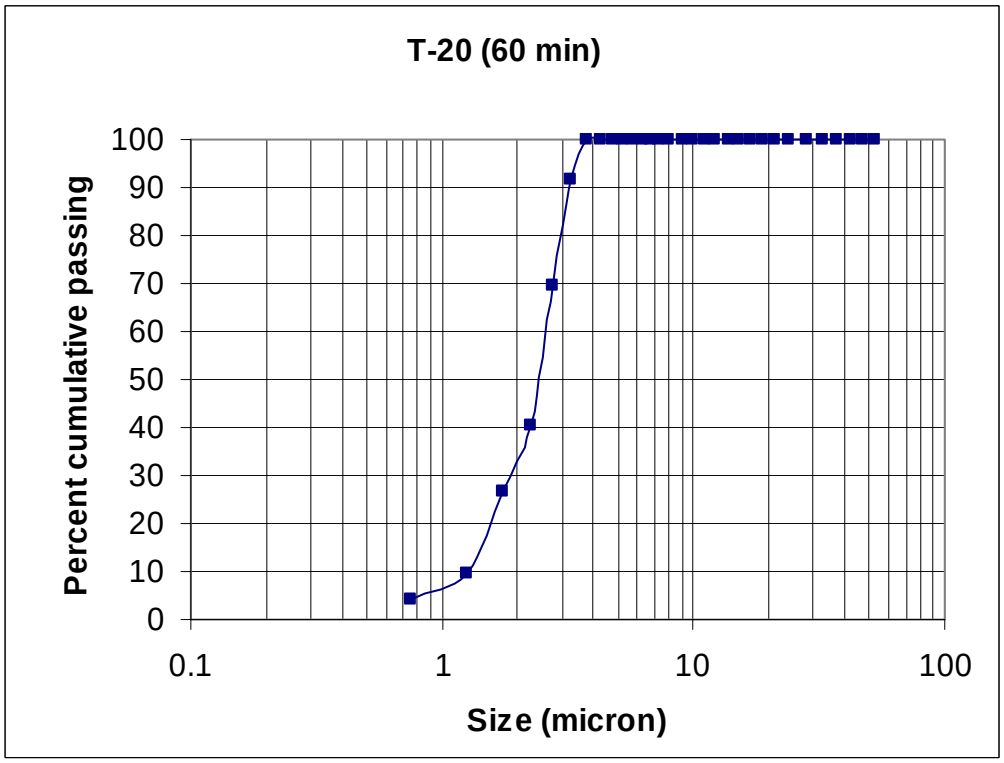


Figure 6.39: Product Size distribution of Test -20B.

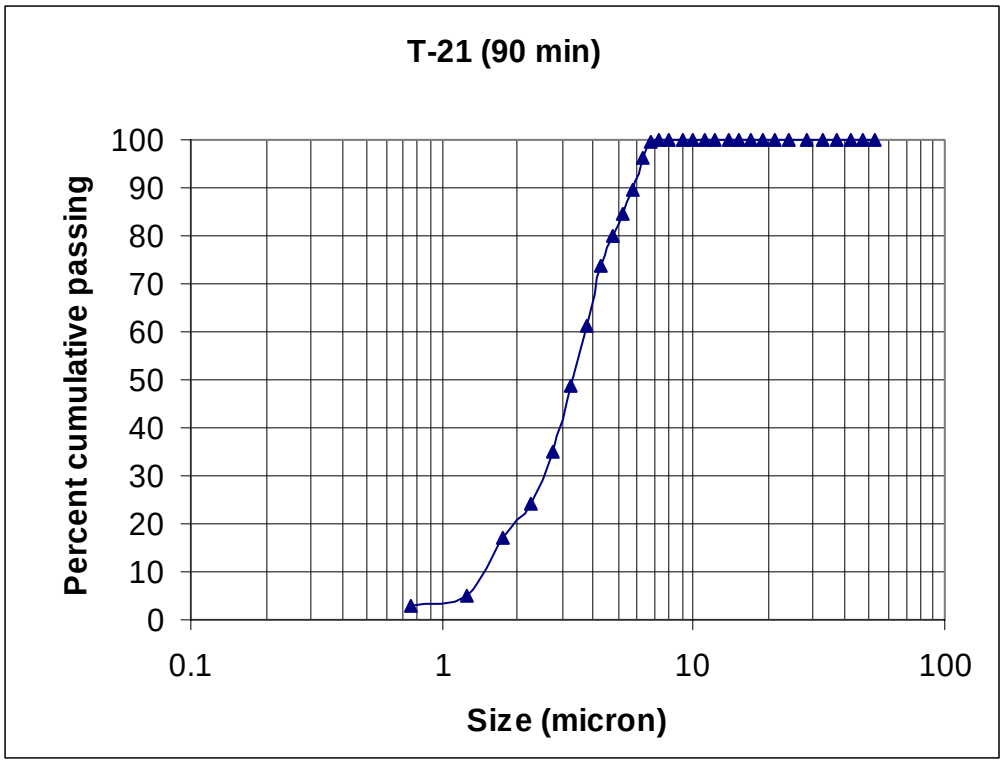


Figure 6.40: Product Size distribution of Test -21B.

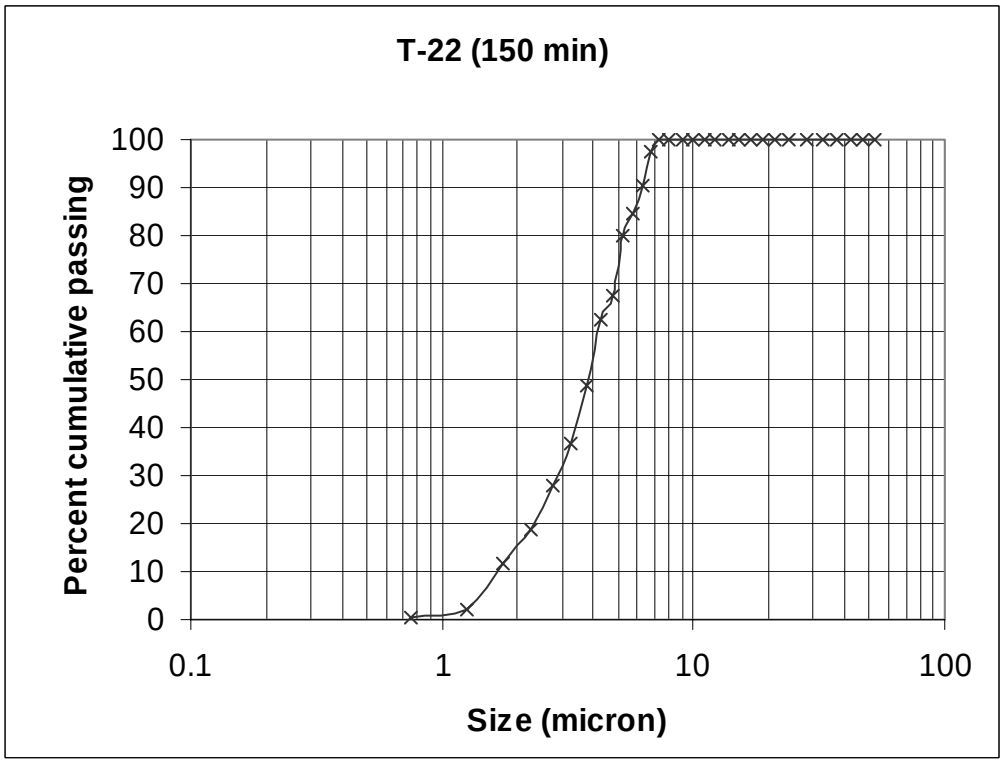


Figure 6.41: Product Size distribution of Test -22B.

### 6.2.4 Conclusion and Discussion

The blending tests with mixed oxide samples of NU and DU also suggested that they can be blended uniformly to produce a product that would have very high proliferation resistance. The size distribution of products indicated negative grinding or agglomeration of fine particles at higher grind times. This suggests that when the starting feed stock NU and DU are finer in size, smaller grind times are enough for blending.

## 6.3 Blending Tests with surrogate of LWBR Fuel pellets

### 6.3.1 Light Water Breeder Reactor (LWBR) fuel pellets

The Light Water Breeder Reactor (LWBR) fuel pellet is a high-fired ceramic of uranium oxide ($UO_2$) in a predominately thorium oxide ($ThO_2$) matrix. The characteristics of this material provide two separate and unique containment features for retaining $^{233}U$ via pellet integrity or toughness.

At the concentration of uranium in the LWBR fuel, each uranium atom is surrounded by approximately two layers of thorium and oxygen atoms. In order to have the uranium free to migrate, the two layers of thorium and oxygen must be selectively removed to expose the uranium. This chemical matrix is synergistically more resistant to chemical or mechanical attack than either $ThO_2$ or the $UO_2$, because the $ThO_2$ matrix is stabilized by the addition of the $UO_2$. The dilute presence of the $UO_2$ which also inhibits it availability, results in the formation of a solid solution of uranium in thorium oxide. The bonding that occurs in the $ThO_2$ results in a chemically inert structure which is resistant to attack by common acids at high concentrations and elevated temperatures.

The second barrier is provided by the high-fired, high-density ceramic monolithic pellet. The fusing of the stabilized $ThO_2$- $UO_2$ and binding additives at temperatures in excess of 1750 °C for at least 12 hours produces a material formation where the uranium atoms are physically caged in the ceramic matrix. Each of the crystallites that have encapsulated the uranium within the thorium oxide matrix is now fused into a ceramic that is even more inert than the fine oxide

powder form. Typically this oxide is very resistant to chemical and physical degradation because of its near massive crystalline structure which has very few crystalline defects to allow chemical attack. As a result very aggressive chemicals are necessary to degrade these ceramic forms. The surface of the pellet is very hard. Thus, it is possible to rub the surface of the bare pellet without generating any surface radiological contamination. Even if the hard ceramic pellet is physically broken the uranium will remain contained in the resulting pieces.

### 6.3.2 Procurement of surrogate material for LWBR pellets

To conduct these tests, a surrogate material for the LWBR pellets is required. As per WBS this material will be provided by INEEL to the University of Utah. The LWBR pellets available at INEEL have been transferred to a storage area. It would be prohibitively costly for INEEL participants to access this material. Through a variety of discussions with many people in the nuclear area, it was decided that thorium oxide in pellet form is the best surrogate for LWBR pellets. Following are the efforts made to locate and manufacture surrogate pellets for LWBR (light water breeder reactor) pellets.

1. Idaho National Engineering and Environmental Lab and University of Utah project personnel contacted a number of locations in the US and Canada for a suitable surrogate.
2. University of Utah personnel obtained the material preparation procedure for the actual LWBR pellets.
3. Ceramic pellets similar to LWBR was taken up first. However, we could not get reliable hardness data for LWBR to match with ceramic pellets.
4. Metallurgical slags were considered next. Slags match LWBR pellets in the manner in which they are formed. Both go through 1500$^{o}$C sintering in furnaces. However, slags have a high porosity while LWBR pellets have very low porosity.

5. Depleted uranium pellets were considered next. These pellets have unusually high strength and since data is unavailable on the compressive strength of LWBR this material was dropped from consideration.

6. The major component of LWBR is thorium oxide. Therefore it was concluded that thorium oxide powder must be procured and must be palletized and fired in a furnace.

Next, efforts to get the thorium oxide pellets resulted in finding a source at Pacific Northwest National Laboratory (PNNL). However, supply of $ThO_2$ pellets by PNNL was expected to take considerable time. Hence it was decided to procure thorium oxide powder separately and complete the blending tests. Thus 250 grams of fine 325 mesh powder was procured from Alfa Aesar Inc.

In addition to the 250 grams of $Tho_2$ powder, PNNL supplied 200 grams of Thorium oxide pellets to University of Utah. $Tho_2$ pellets were subjected for independent grinding tests to reduce their size close to the $Tho_2$ powder procured from Alfa Aesar Inc.

The test work with surrogate of LWBR pellets were conducted in two parts and are discussed separately. They are:

- Grinding of 6mm long by 10mm diameter pellets using 10 mm size magnesium oxide grinding balls.
- Blending tests with thorium oxide powder and natural uranium

### 6.3.3 Grinding of Thorium Oxide Pellets:

The objective of these set of tests was to check the ability of RM-2 mill to reduce the 10 mm diameter pellets to finer size required for further blending tests with natural uranium. The

thorium oxide pellets received from PNNL are of 10 mm diameter by 6 mm long (Figure 6.42). Magnesium oxide grinding media of 10 mm diameter by 10mm long (Figure 6.43) were used for grinding the pellets. The RM-2 mill operating conditions for this test are:

| **Parameter** | **Value** |
|---|---|
| Ball filling | 20% |
| Void filling | 100% |
| Mill speed | 70% critical |
| Grind time | 20, 40 and 60 minutes |

Figure 6.42: Thorium oxide pellets received from PNNL.

Figure 6.43: Magnesium oxide grinding media.

The size distribution of the products after each grind time are given in Table 6.8. Graphs of the prolduct size distributions are shown in Figures 6.44-6.46. It is seen from these figures that 20 minutes grinding time is enough to break all the pellets to 100% passing 100 micron size. At higher grind times of 40 and 60 minutes, the coarser fraction of the product becomes even more finer. The size distribution of the 60 minutes product is very close to the thorium oxide powder (Figure 6.47) that was used for the blending test work.

The results of the thorium oxide pellets (surrogate of LWBR pellets) grinding tests have amply demonstrated that the LWBR pellets can be successfully ground to finer sizes in RM-2 mill. In otherwords, even though the LWBR pellets are expected to have high hardness attributable to ceramic oxide pellets, the RM-2 mill delivers sufficient evergy to break down these pellets to a fine enough powder form.

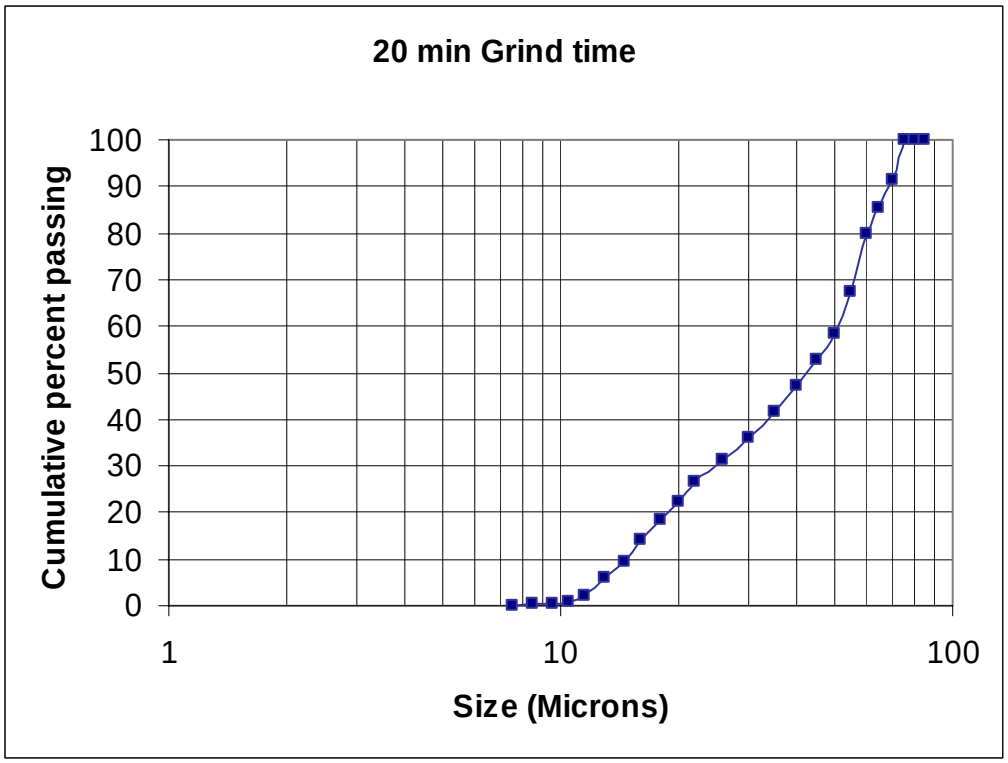


Figure 6.44: 20 min grind product size distribution of Thorium oxide pellets.

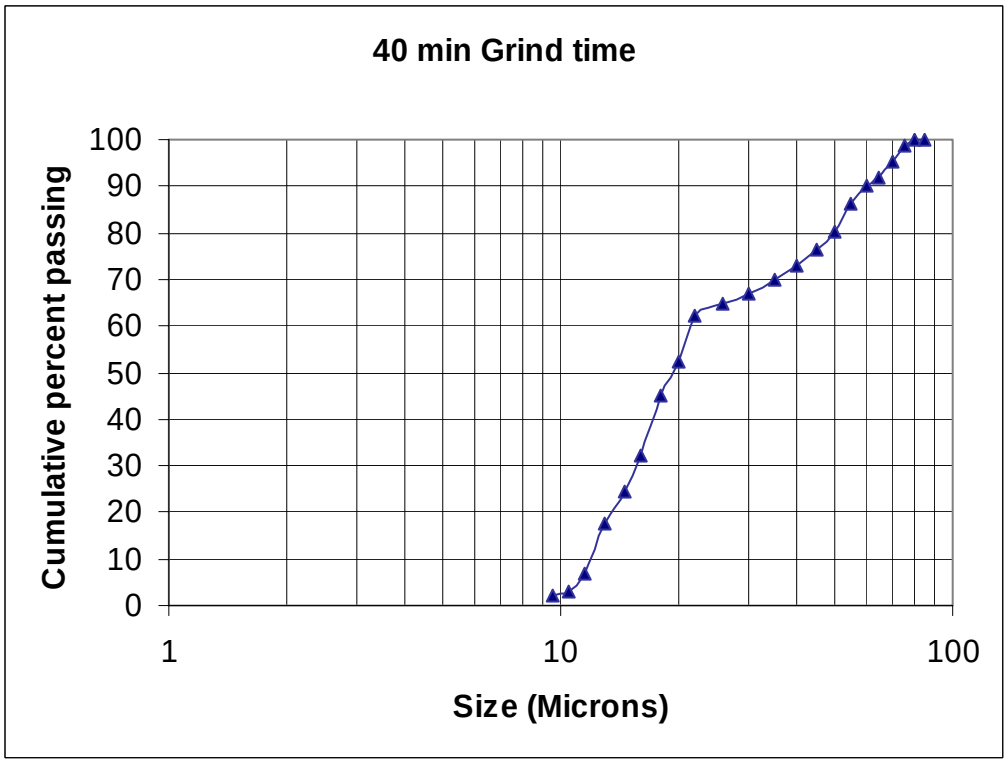


Figure 6.45: 40 min grind product size distribution of Thorium oxide pellets.

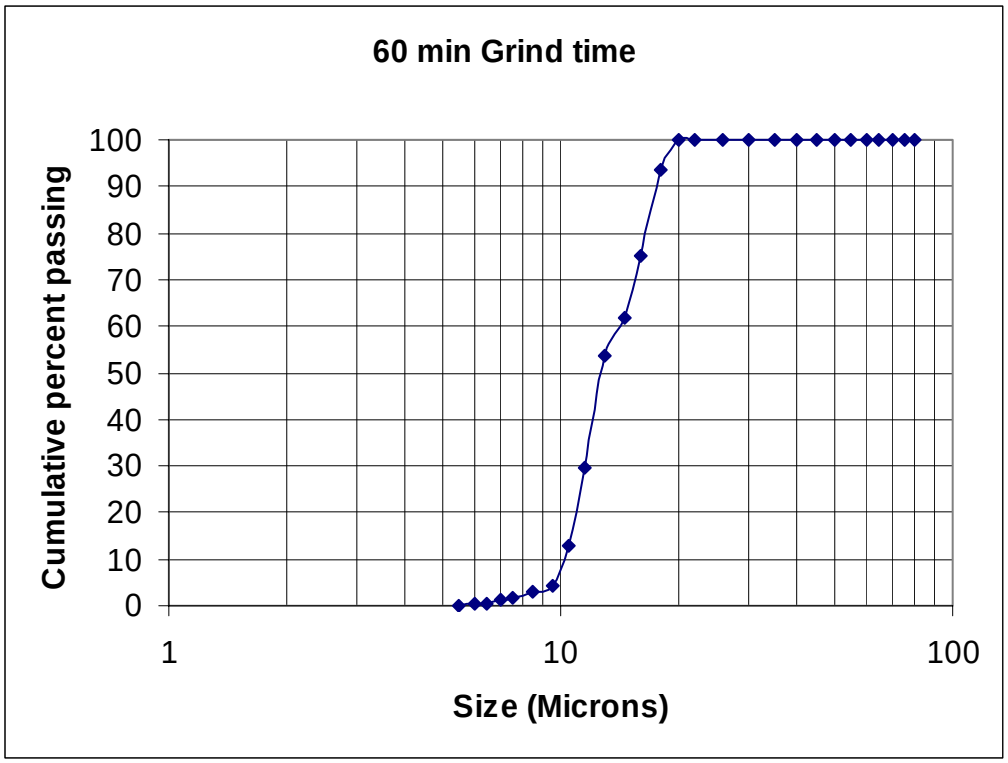


Figure 6.46: 60 min grind product size distribution of Thorium oxide pellets.

### 6.3.4 Blending Tests with Thorium Oxide Powder and Natural Uranium:

The thorium oxide powder procured from Alfa Aesar Inc. and the natural uranium feed stock were used in this test work. The limited mass of thorium oxide powder (250 grams) puts severe restriction on the number of tests. To avoid this situation, the natural uranium was taken as the diluent (80% by weight ratio) and thorium oxide powder for the enriched fraction (20% by weight ratio). This method allowed 6 tests, each at 3 different grinding times making total of 18 tests. The operating conditions of these tests are given in Table 6.9

Table 6.9: The operating conditions of RM-2 mill.

| Test No | Ball Size (mm) | Void Filling (%) | Critical Speed (%) | Grind Time (min) |
|---|---|---|---|---|
| 1C | 2 | 44 | 63 | 20 |
| 2C | 2 | 44 | 63 | 40 |
| 3C | 2 | 44 | 63 | 60 |
| 4C | 2 | 44 | 70 | 20 |
| 5C | 2 | 44 | 70 | 40 |
| 6C | 2 | 44 | 70 | 60 |
| 7C | 2 | 57 | 63 | 20 |
| 8C | 2 | 57 | 63 | 40 |
| 9C | 2 | 57 | 63 | 60 |
| 10C | 2 | 57 | 70 | 20 |
| 11C | 2 | 57 | 70 | 40 |
| 12C | 2 | 57 | 70 | 60 |
| 13C | 2 | 71 | 63 | 20 |
| 14C | 2 | 71 | 63 | 40 |
| 15C | 2 | 71 | 63 | 60 |
| 16C | 2 | 71 | 70 | 20 |
| 17C | 2 | 71 | 70 | 40 |
| 18C | 2 | 71 | 70 | 60 |

**Isotope Analysis:**

Since the chemical composition of Natural Uranium (NU) and Thorium oxide ($ThO_2$) powders are different, each test product was analyzed for both $^{232}$Th and $^{235}$U isotopes. The repeated chemical analysis and the mean values of Natural Uranium (NU) and Thorium oxide ($ThO_2$) feed stock samples are given in Tables 6.10 and 6.11.

Table 6.10: Chemical analysis of NU feed stock

| **Sample No.** | **$^{232}$Th isotope (ppm)** |
|---|---|
| 1 | 6100 |
| 2 | 6400 |
| 3 | 5880 |
| Mean/average, $E(C_{ThO_2})$ | 6126.7 |
| Standard diviation ($\sigma_{ThO_2}$) | 261.0 |

Table 6.11: Chemical analysis of feed stock

| **Sample No.** | **$^{235}$U isotope (ppm)** |
|---|---|
| 1 | 5360 |
| 2 | 5420 |
| 3 | 5540 |
| Mean/average, $E(C_{NU})$ | 5440 |
| Standard diviation ($\sigma_{NU}$) | 91.7 |

In each blending test, $ThO_2$ and NU feed stock in the weight ratio 20:80, was used. Therefore in the blended product we expect the mean value of the $^{235}$U and $^{232}$Th isotopes to be given by the formula:

$$E(C_{^{235}\mathrm{U}}) = 0.8E(C_{NU}) + 0.2E(C_{ThO_2})$$
$$= 0.8 \text{ x } 5440 + 0.2 \text{ x } 0$$
$$= 4352$$

Where E(..) denotes expected or mean value, $C_{^{235}\mathrm{U}}$ stand for $^{235}$U isotope in the mixture, $C_{ThO_2}$ denotes $^{235}$U isotope in the thorium oxide powder, $C_{NU}$ denotes the $^{235}$U isotope in natural uranium.

Therefore, we expect the blended mixture to show $^{235}$U isotope value of 4352. In a similar manner, the variability or standard deviation ($\sigma$) of the blended mixture is given by:

$$\sigma_{^{235}U} = \sqrt{\left(0.8^2 \sigma_{NU}{}^2\right) + \left(0.2^2 \sigma_{ThO_2}{}^2\right)}$$
$$= \sqrt{\left(0.8^2 x 91.7^2\right) + \left(0.2^2 x 0^2\right)}$$
$$= 73.32$$

Where, the subscripts M, NU and $ThO_2$ denote mixture, natural uranium and thorium oxide respectively.

The overall error or composite error in the product analysis included the measurement error also. The measurement error refers to the error produced by Inductively Coupled Plasma Spectroscopy. Therefore the overall error is

$$\text{Overall Error } (^{235}\text{U}) = \pm\left(2\sigma_{^{235}U} + 0.05E(C_{^{235}U})\right)$$
$$= \pm\left(2\times 73.32 + 0.05\times 4352\right)$$
$$= \pm 364.24$$

Therefore we expect the $^{235}$U isotope analysis of test products to fall within a band given by

Upper limit ($^{235}$U) = 4352 + 364.24 = 4716.24

Lower limit ($^{235}$U) = 4352 – 364.24 = 4097.76

Similar to $^{235}$U mean value and error bands, we expect the mean value of the $^{232}$Th isotope in the blended product to be given by the formula:

$$E(C_{^{232}Th}) = 0.8E(C_{NU}) + 0.2E(C_{ThO_2})$$
$$= 0.8 \text{ x } 0 + 0.2 \text{ x } 6126.7$$
$$=1225.3$$

Where E(..) denotes expected or mean value, $C_{^{232}Th}$ stand for $^{232}$Th isotope in the mixture, $C_{ThO_2}$ denotes $^{232}$Th isotope in the thorium oxide powder, $C_{NU}$ denotes the $^{232}$Th isotope in natural uranium.

Therefore, we expect the blended mixture to show $^{232}$Th isotope value of 1225.3. In a similar manner, the variability or standard deviation ($\sigma$) of the blended mixture is given by:

$$\begin{aligned}\sigma_{^{232}Th} &= \sqrt{\left(0.8^2\sigma_{NU}{}^2\right)+\left(0.2^2\sigma_{ThO_2}{}^2\right)} \\ &= \sqrt{\left(0.8^2 x0^2\right)+\left(0.2^2 x261^2\right)} \\ &= 52.2\end{aligned}$$

Where, the subscripts M, NU and $ThO_2$ denote mixture, natural uranium and thorium oxide respectively.

The overall error or composite error in the product analysis included the measurement error also. The measurement error refers to the error produced by Inductively Coupled Plasma Spectroscopy. Therefore the overall error is

$$\begin{aligned}\text{Overall Error } (^{232}\text{Th}) &= \pm\left(2\sigma_{^{232}Th}+0.05E(C_{^{232}Th})\right) \\ &= \pm\left(2\times 52.2+0.05\times 1225.3\right) \\ &= \pm 165.68\end{aligned}$$

Therefore we expect the $^{232}$Th isotope analysis of test products to fall within a band given by:

Upper limit ($^{232}$Th) = 1225.3 + 165.68 = 1390.98

Lower limit ($^{232}$Th) = 1225.3 – 165.68 = 1059.62

The $^{235}$U and $^{232}$Th isotope values of the two representative samples taken from each test product are given in Table 6.12.

Table 6.12: The $^{235}U$ and $^{232}Th$ isotope values of the experimental products.

| Test No | Sample ID | $^{235}U$ isotope ppm | $^{232}Th$ isotope ppm |
|---|---|---|---|
| 1C | Sample 1 | 4200 | 1200 |
| 1C | Sample 2 | 4360 | 1440 |
| 2C | Sample 1 | 4080 | 1260 |
| 2C | Sample 2 | 4410 | 1260 |
| 3C | Sample 1 | 4100 | 1200 |
| 3C | Sample 2 | 4340 | 1110 |
| 4C | Sample 1 | 4250 | 1016 |
| 4C | Sample 2 | 4440 | 1086 |
| 5C | Sample 1 | 4320 | 1070 |
| 5C | Sample 2 | 4360 | 1330 |
| 6C | Sample 1 | 4280 | 1260 |
| 6C | Sample 2 | 4110 | 1290 |
| 7C | Sample 1 | 4360 | 1129 |
| 7C | Sample 2 | 4400 | 1226 |
| 8C | Sample 1 | 4300 | 1443 |
| 8C | Sample 2 | 4300 | 1287 |
| 9C | Sample 1 | 4370 | 1211 |
| 9C | Sample 2 | 4310 | 994 |
| 10C | Sample 1 | 3830 | 1050 |
| 10C | Sample 2 | 4430 | 1470 |
| 11C | Sample 1 | 4150 | 1380 |
| 11C | Sample 2 | 4290 | 1220 |
| 12C | Sample 1 | 4630 | 1080 |
| 12C | Sample 2 | 4300 | 1180 |
| 13C | Sample 1 | 4470 | 1250 |
| 13C | Sample 2 | 4360 | 1550 |
| 14C | Sample 1 | 3900 | 1110 |
| 14C | Sample 2 | 4220 | 1250 |
| 15C | Sample 1 | 4310 | 1300 |
| 15C | Sample 2 | 4360 | 1020 |
| 16C | Sample 1 | 3340 | 1148 |
| 16C | Sample 2 | 4410 | 1520 |
| 17C | Sample 1 | 4380 | 1180 |
| 17C | Sample 2 | 4320 | 1260 |
| 18C | Sample 1 | 4300 | 1350 |
| 18C | Sample 2 | 4540 | 1060 |

The distribution of the $^{235}U$ and $^{232}Th$ isotope values with reference to their expected upper and lower bounds are shown in Figure 6.47 and Figure 6.48. As two samples were analyzed for each test, it makes 36 data points from 8 tests. These data are shown in Figure 6.47 and Figure 6.48. Although few data points fall outside the limits, majority of the data points do fall within the upper and lower limits which implies that blending is complete in all samples. Hence, we conclude that the entire mixture in the canister is completely blended.

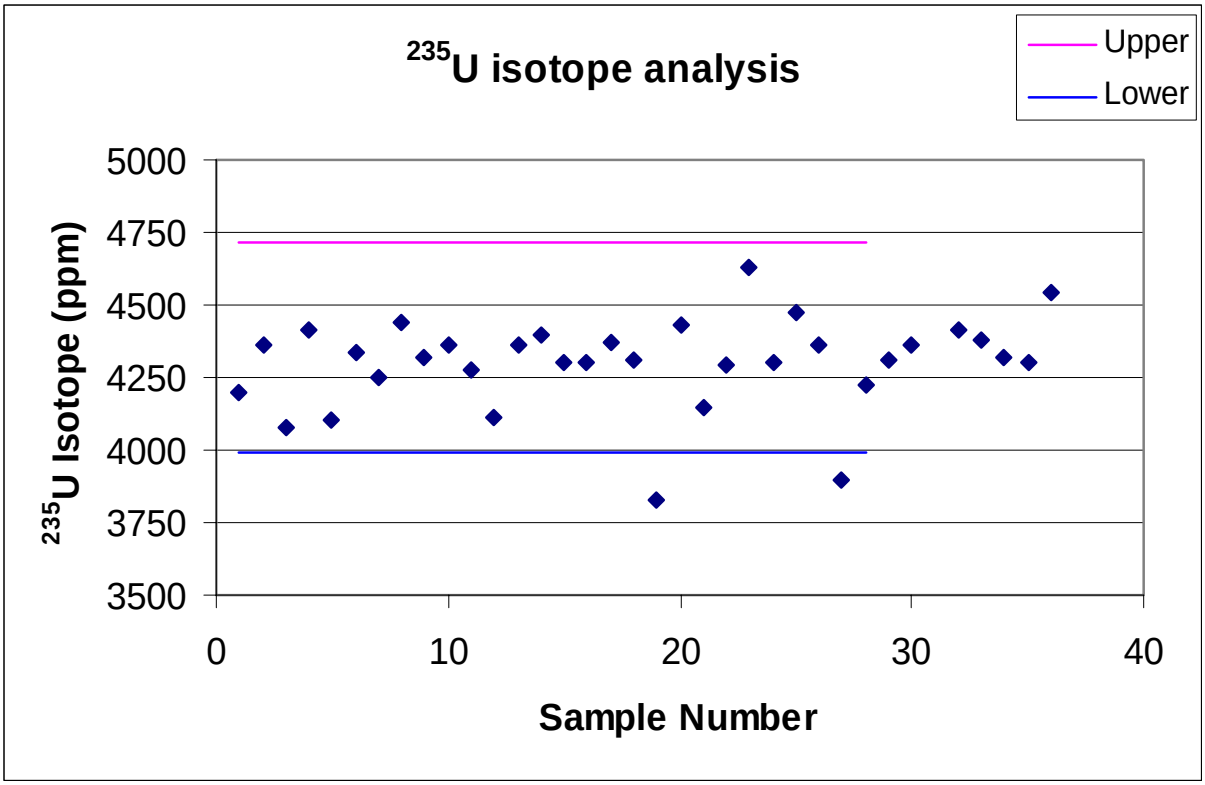


Figure 6.47: The $^{235}U$ isotope analysis of the blended products shown with upper and lower standard deviation error bounds.

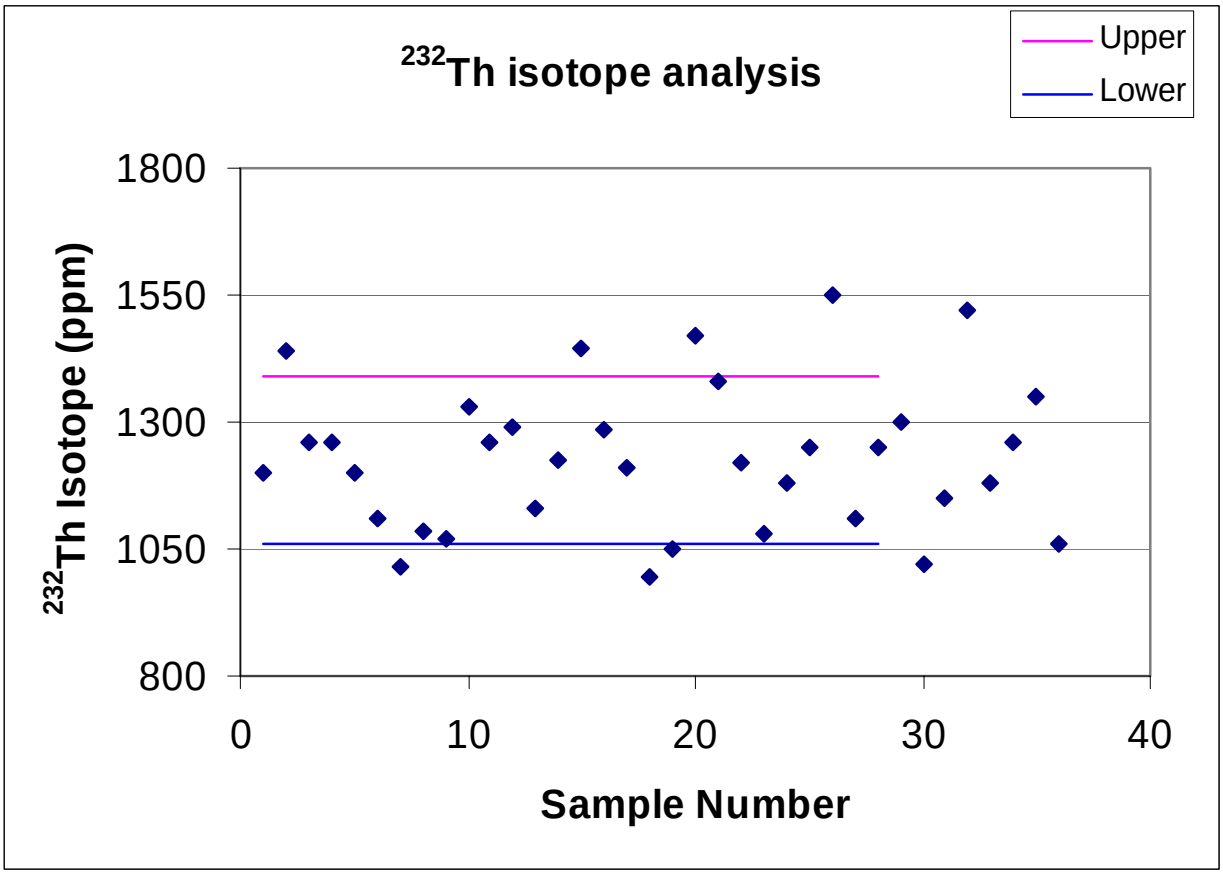


Figure 6.48: The $^{232}$Th isotope analysis of the blended products shown with upper and lower standard deviation error bounds.

**Product size distribution:**

Particle size distribution of NU and $ThO_2$ feed stock samples are shown in Figure 6.49 and Figure 6.50. As both NU and $ThO_2$ powder samples have the similar size distribution, their mixture blended in 20:80 weight ratios is also has the similar size distribution with 100% passing size of about 20 microns. The particle size distribution of the mixture is shown in Figure 6.51.

Negative grinding (agglomeration of fine particles due to excessive energy levels) phenomena was predominant in the previous sets of experiments as described in sections 6.1 and 6.2. Negative grinding is not desirable in these experiments and hence the grinding time was reduced in this set of experiments. The size distributions of the test products at different conditions are given in Figures 6.52-6.67. The following points are noted from these figures:

- As expected, the negative grinding has been significantly reduced in these blending tests. This suggests that grind times of even 20 minutes would be enough for homogenous blending and to obtain a uniform product size distribution.
- The 100% passing size of the product reaches as fine as 3 microns, which is significantly smaller than the feed size of 20 microns.
- The influence of mill critical speed on product size is significant as the test at 78% of critical speed produces a finer product of 100% passing 2 microns in just 20minutes (Figure 6.65).
- As observed in section 6.2, the tests with 3 mm size balls helps in negative grinding aspect instead of producing a finer product.
- When the mill filling increased from 20% to 30%, the product size distribution becomes relatively finer. This is due to crowding of particles which reduces the ball to ball contact and increases the ball to particle contact.

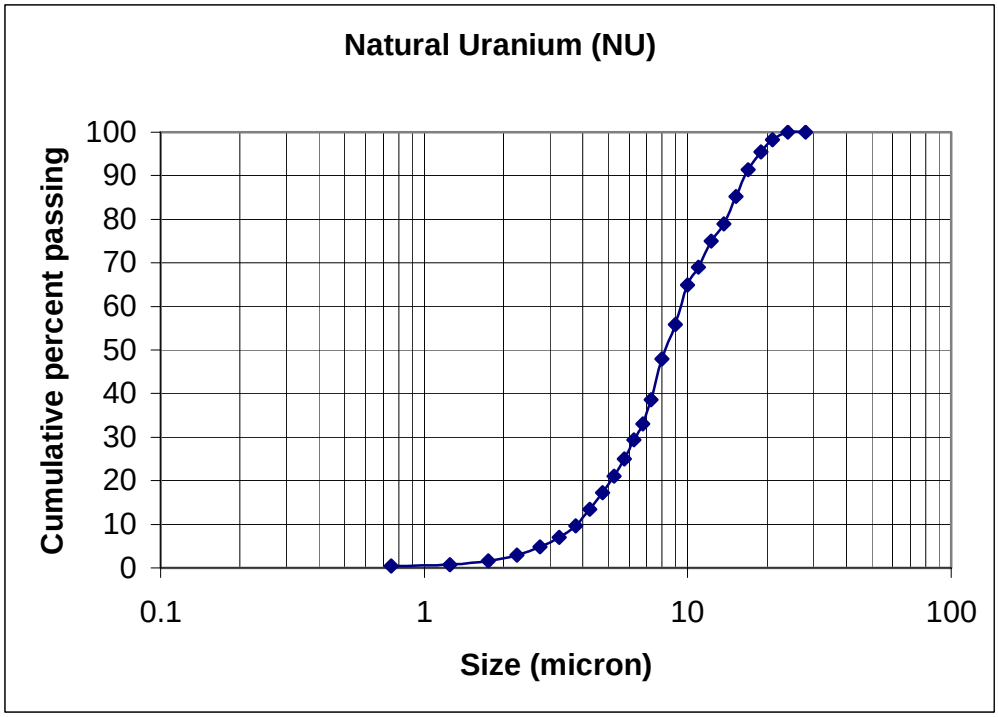


Figure 6.49: The size analysis of the natural uranium feed stock sample.

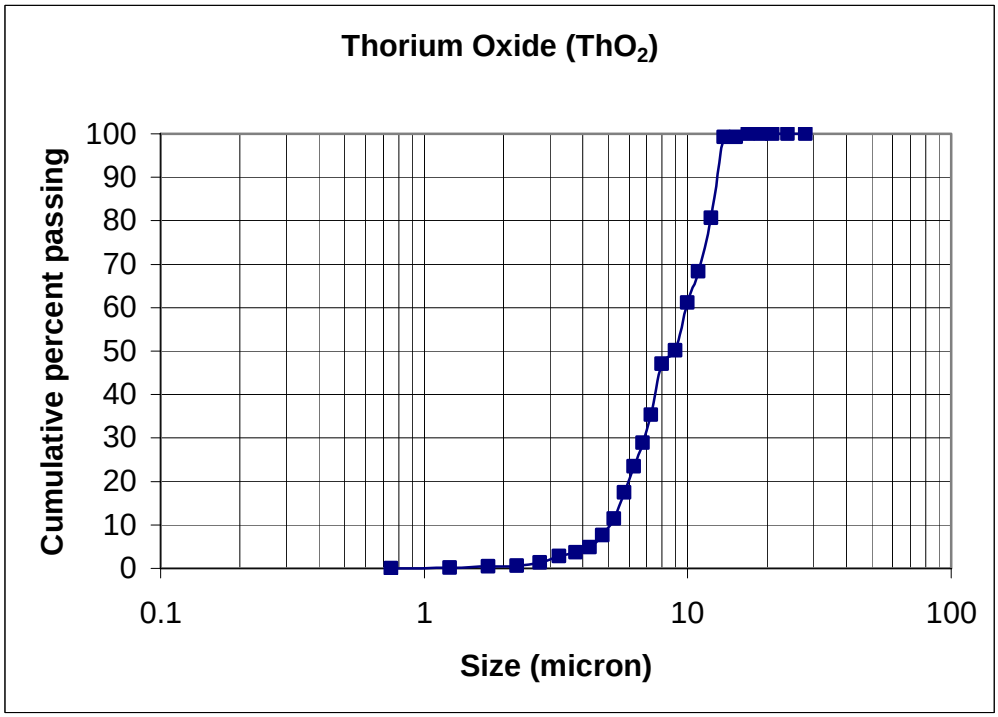


Figure 6.50: The size analysis of the thorium oxide feed stock sample.

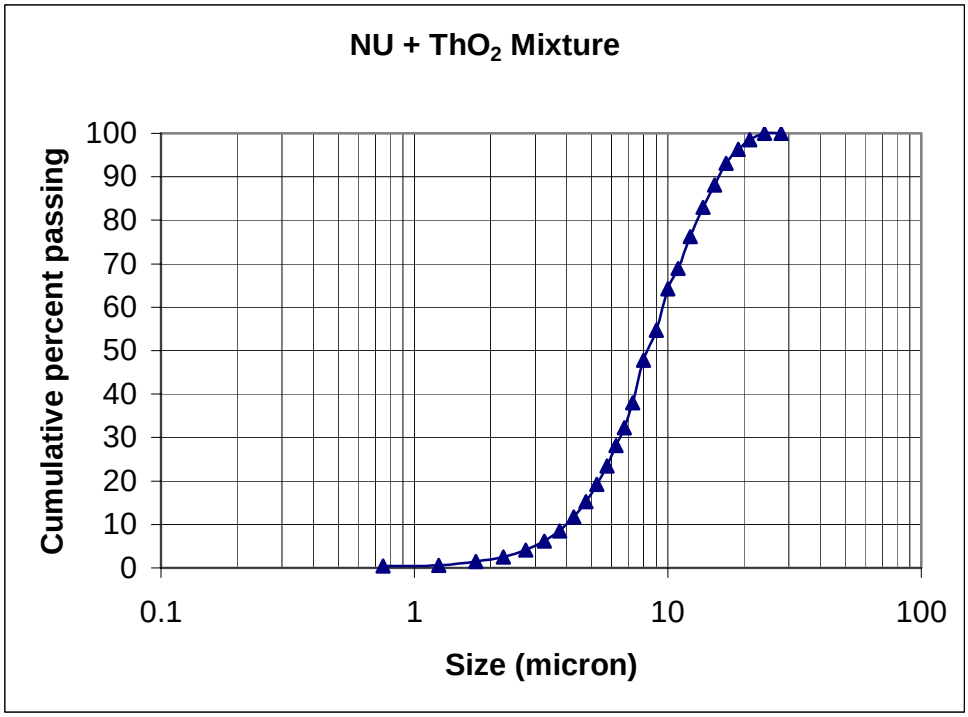


Figure 6.51: The size analysis of the NU+ThO2 mixture (80:20 weight ratio).

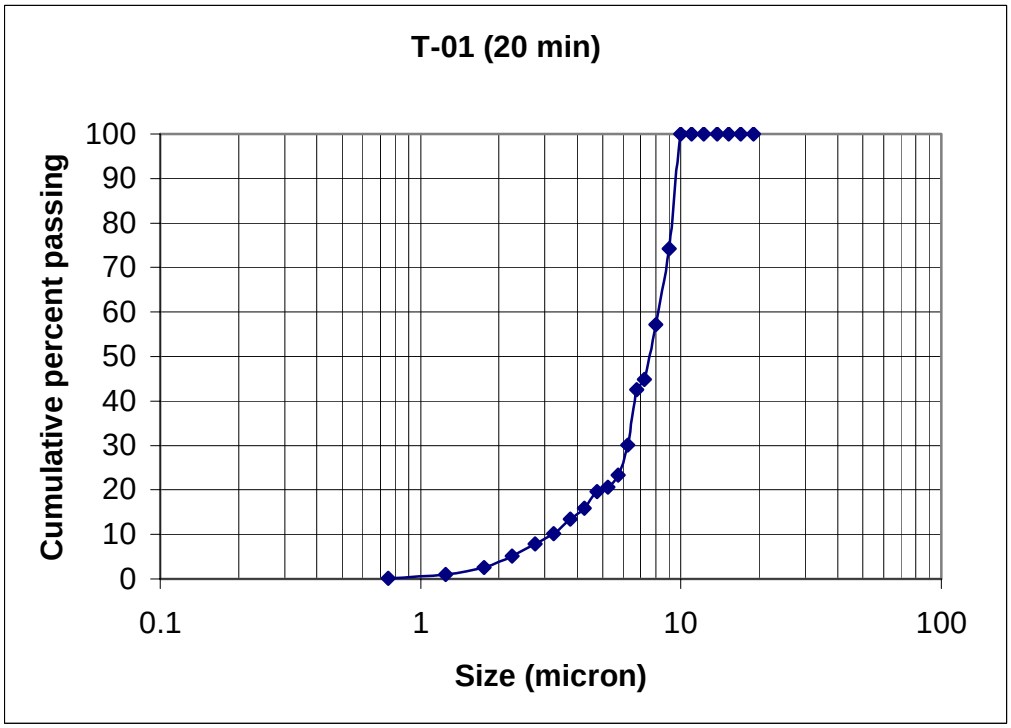


Figure 6.52: Product size distribution of Test-01C.

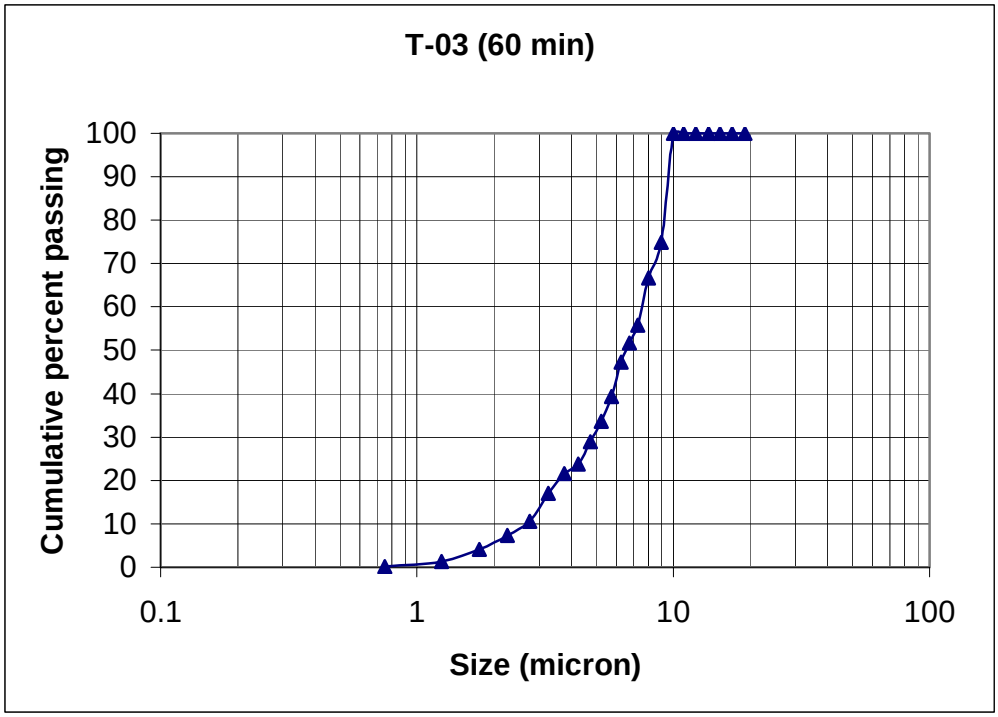


Figure 6.53: Product size distribution of Test-03C.

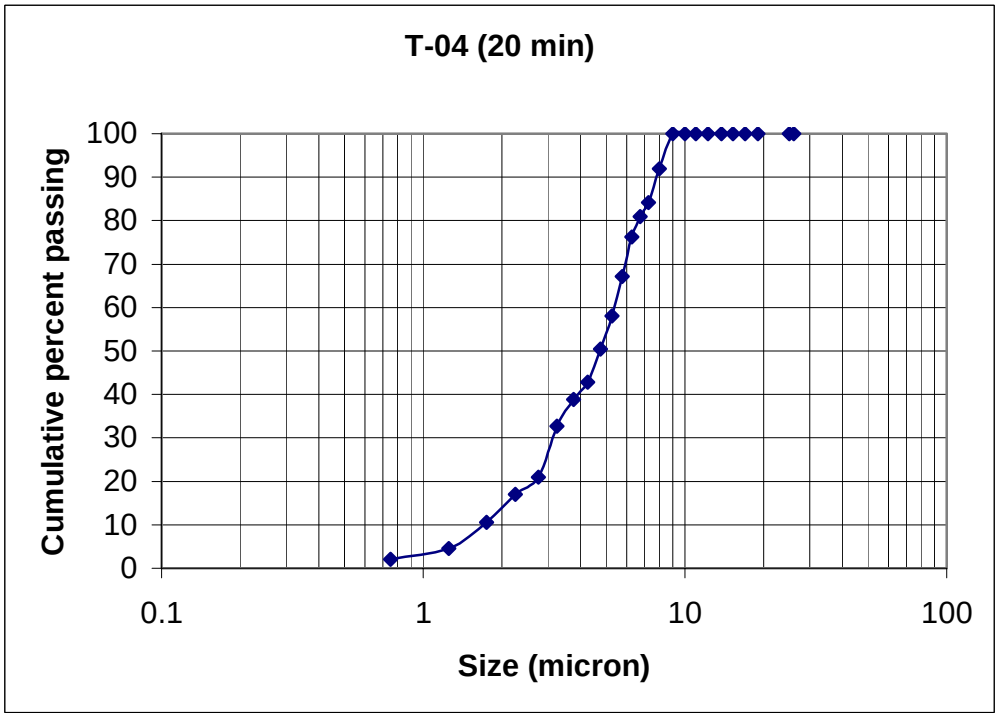


Figure 6.54: Product size distribution of Test-04C.

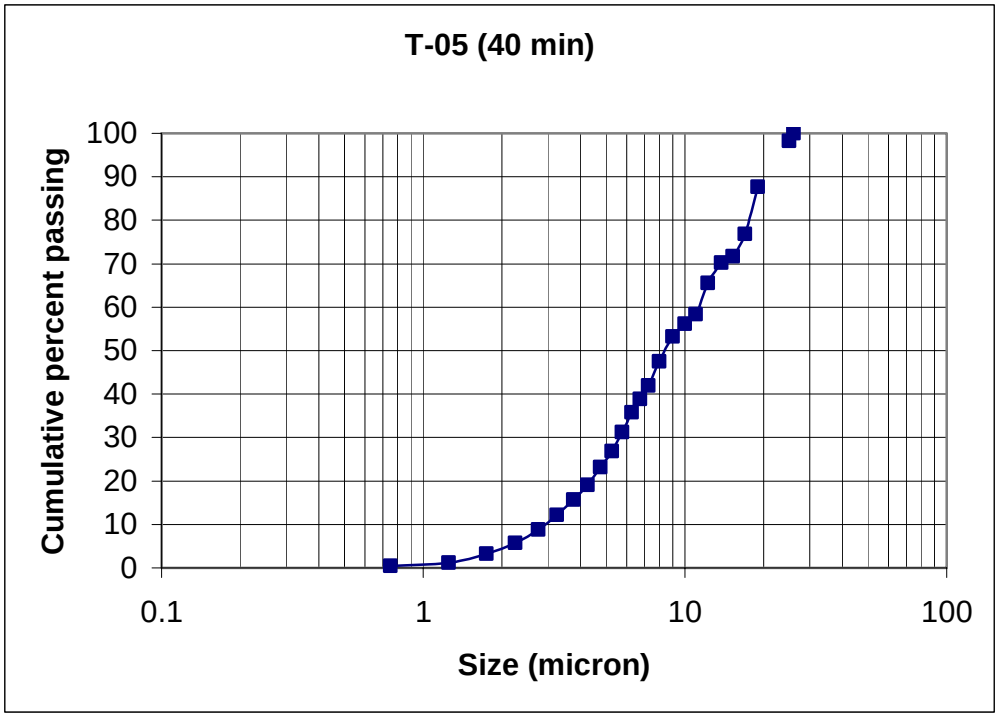


Figure 6.54: Product size distribution of Test-05C.

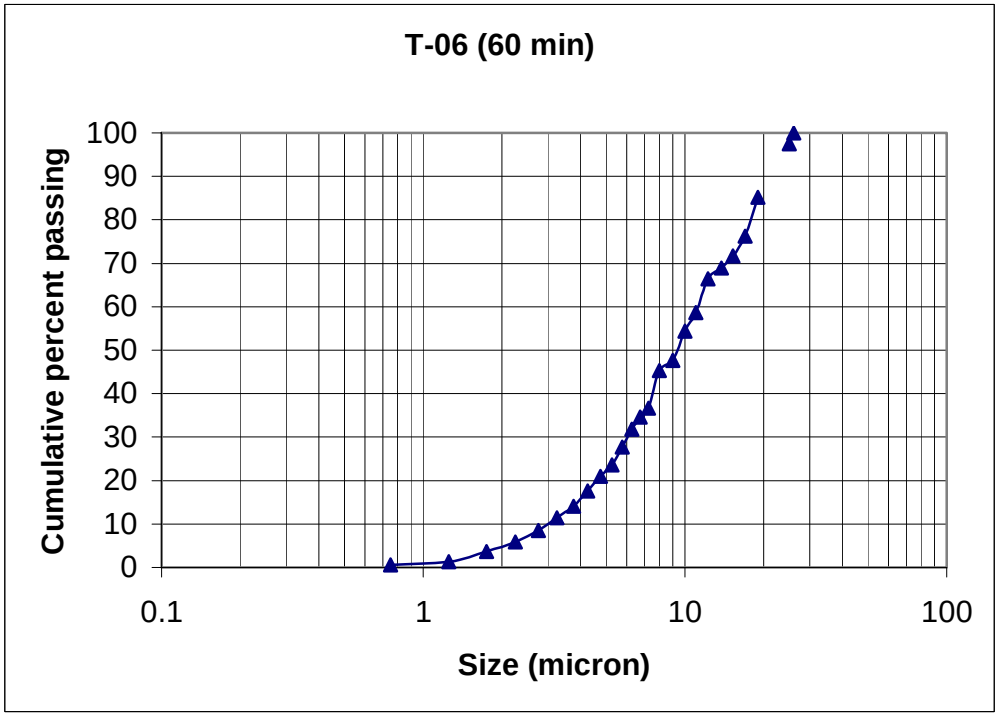


Figure 6.55: Product size distribution of Test-06C.

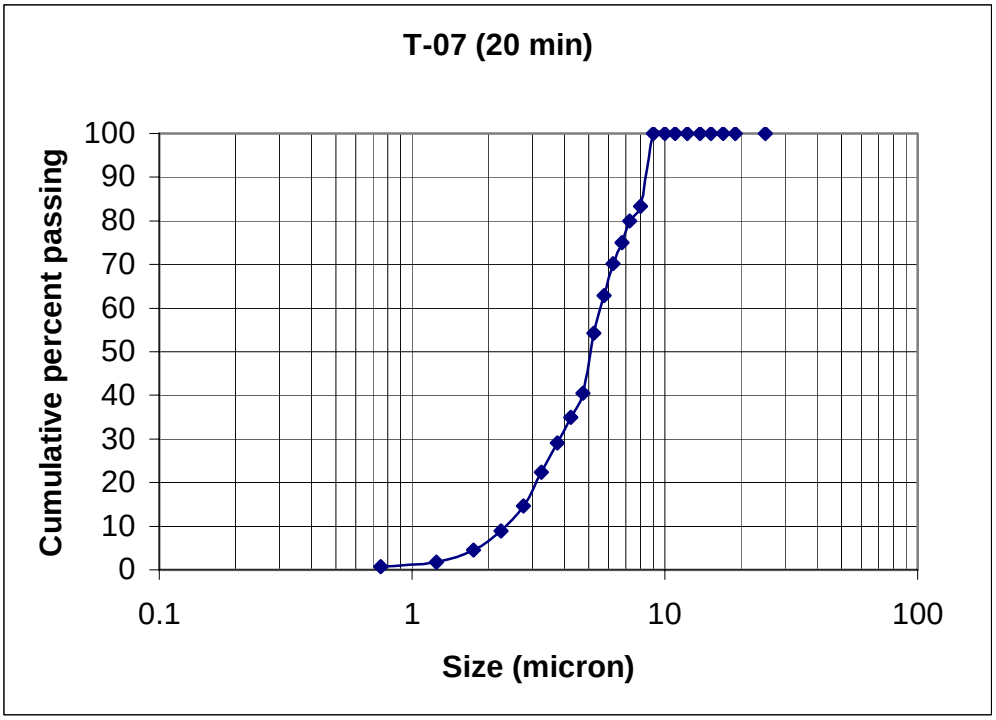


Figure 6.56: Product size distribution of Test-07C.

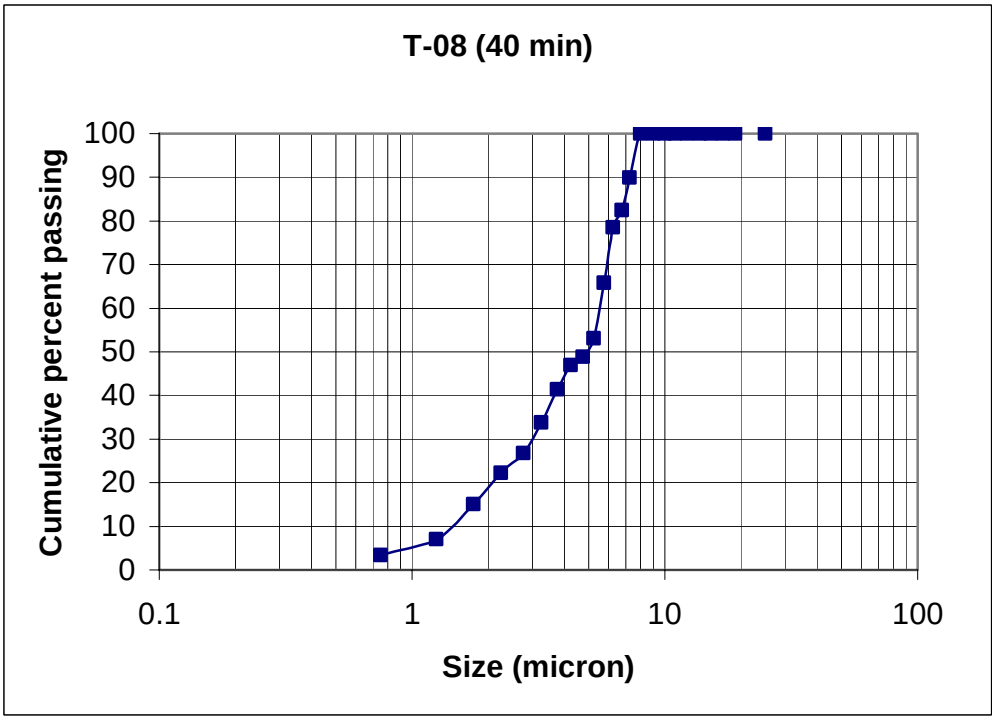


Figure 6.57: Product size distribution of Test-08C.

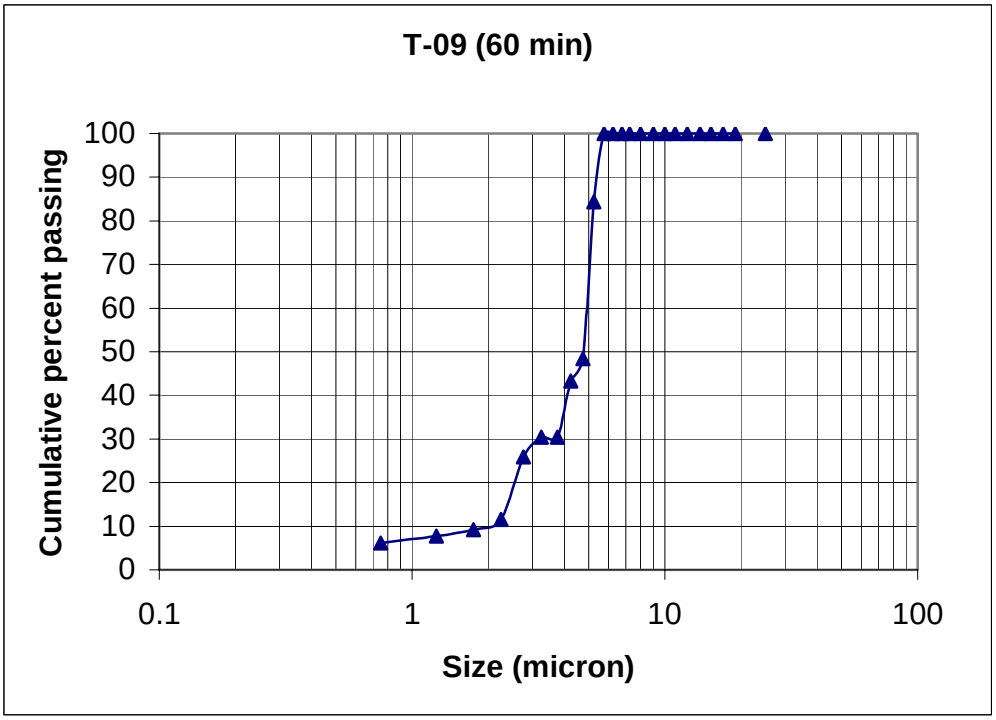


Figure 6.58: Product size distribution of Test-09C.

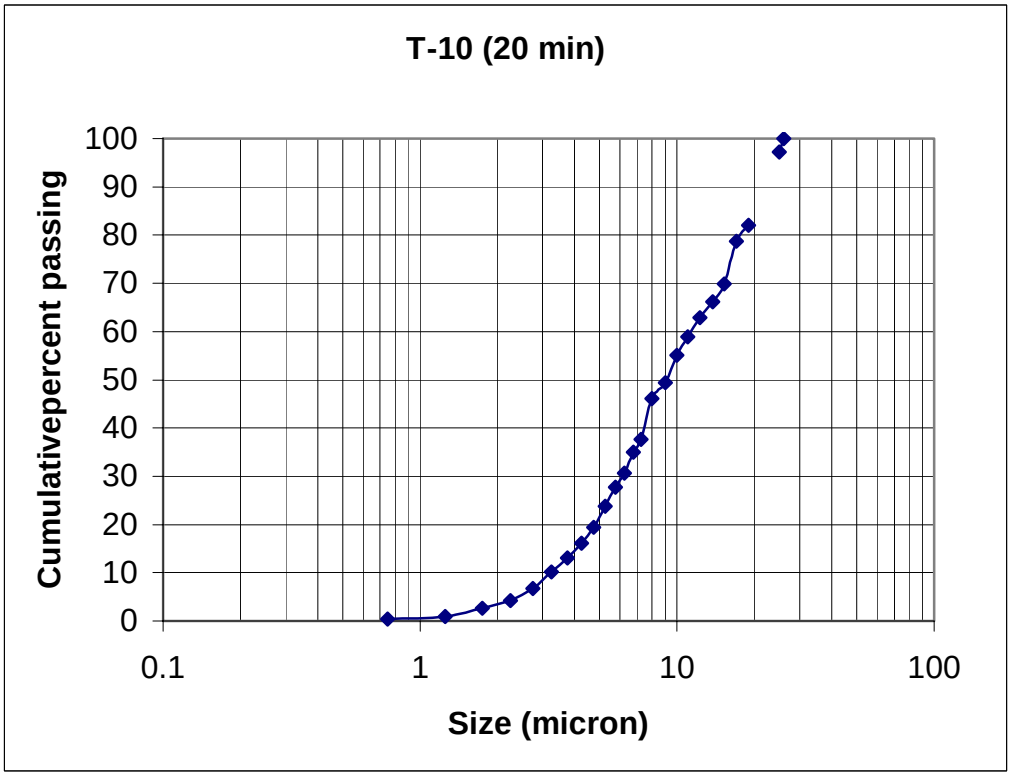


Figure 6.59: Product size distribution of Test-10C.

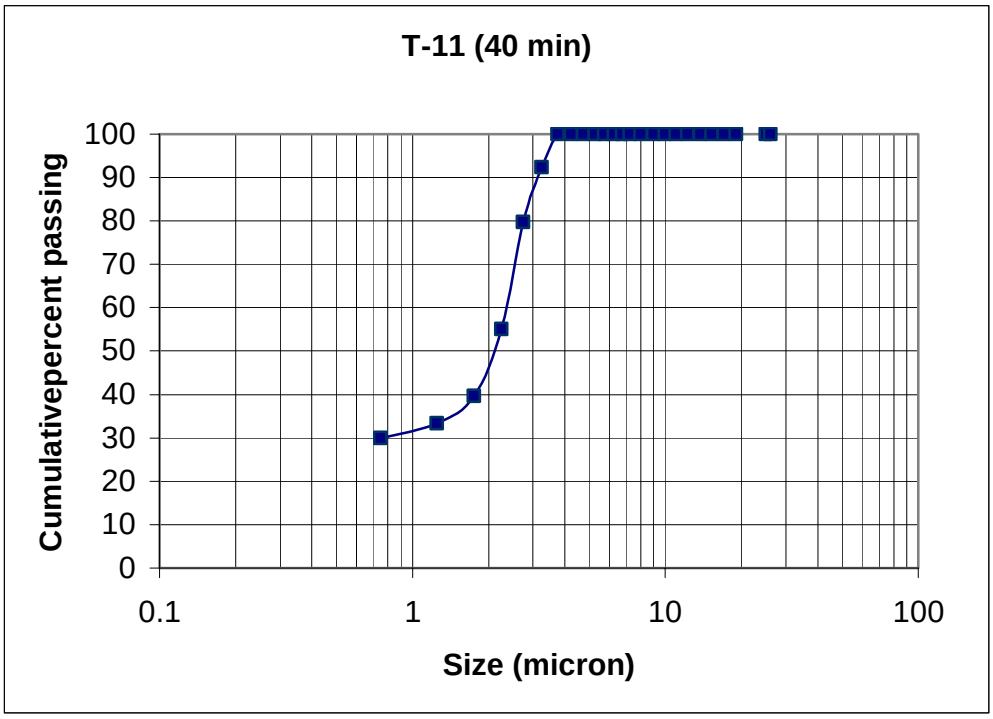


Figure 6.60: Product size distribution of Test-11C.

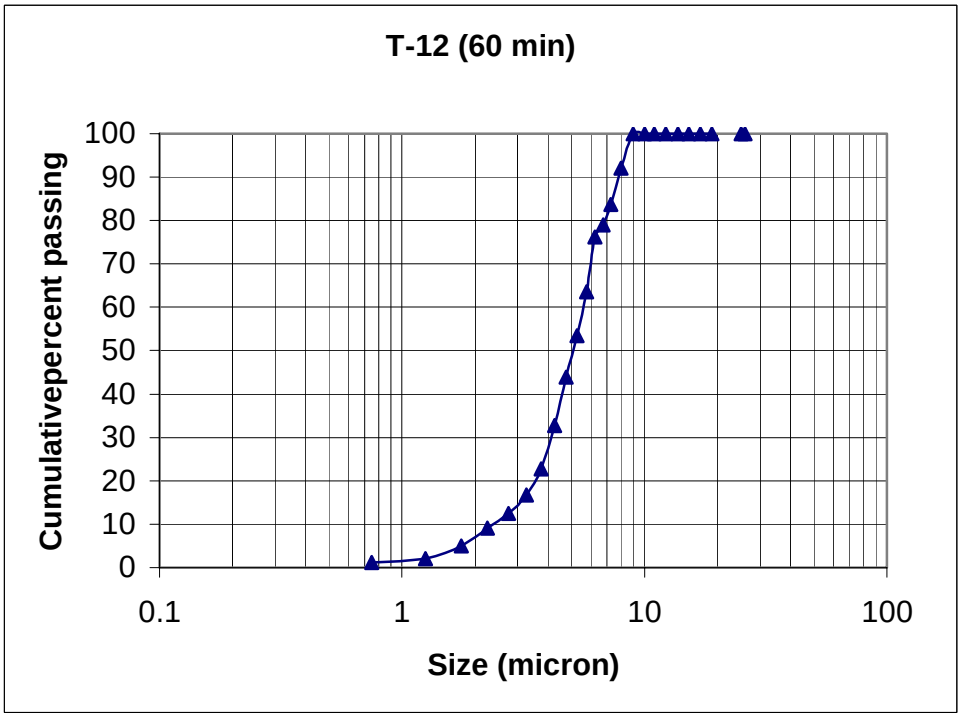


Figure 6.61: Product size distribution of Test-12C.

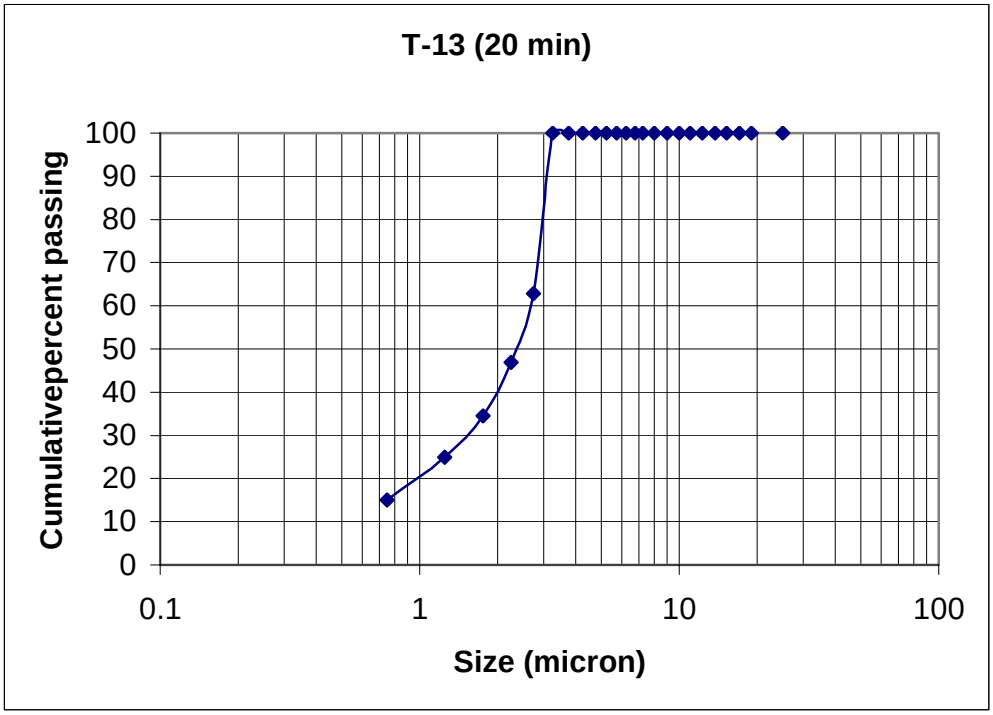


Figure 6.62: Product size distribution of Test-13C.

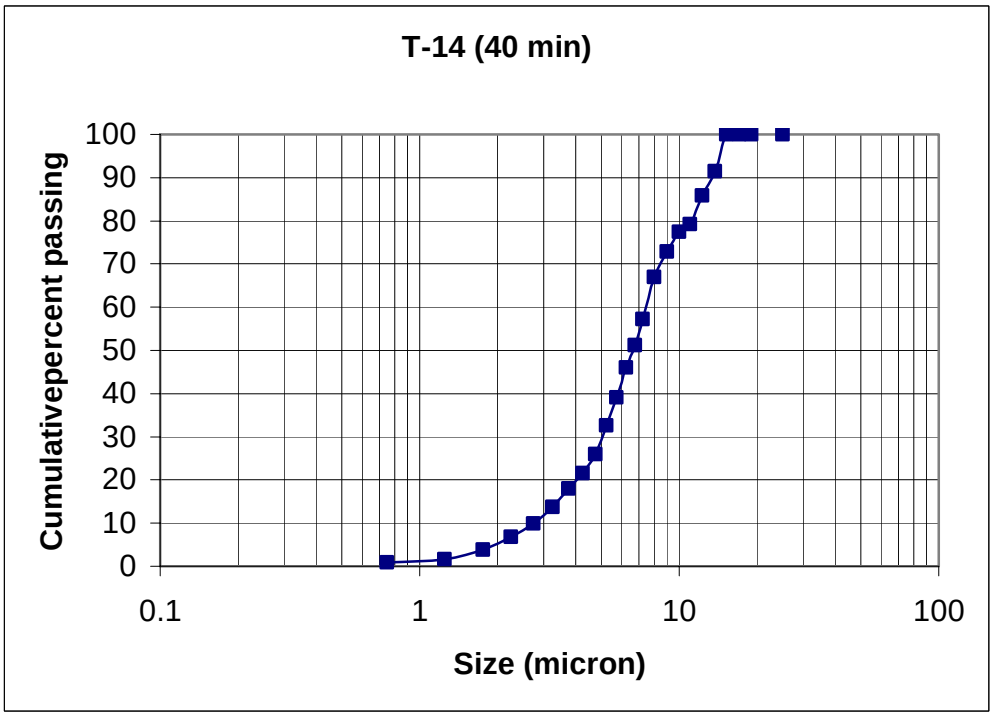


Figure 6.63: Product size distribution of Test-14C.

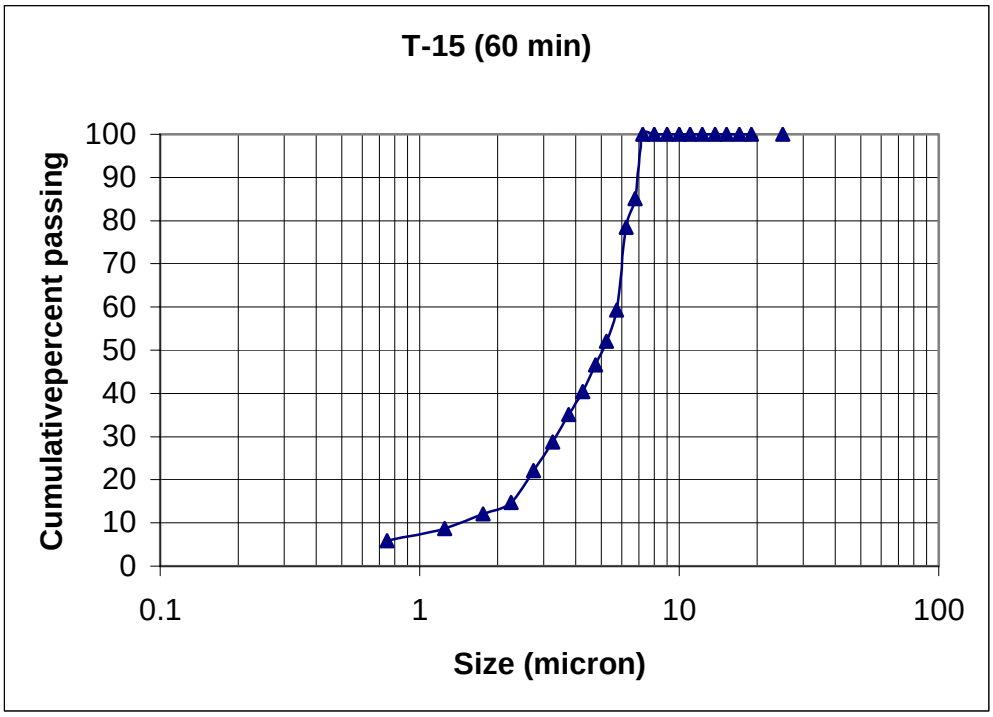


Figure 6.64: Product size distribution of Test-15C.

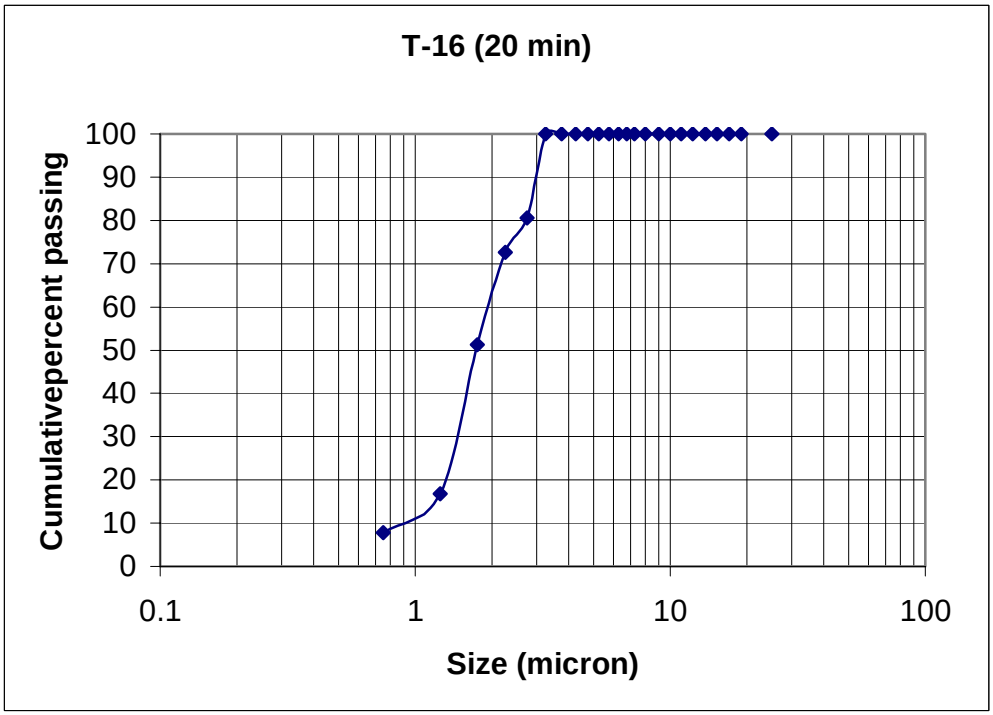


Figure 6.65: Product size distribution of Test-16C.

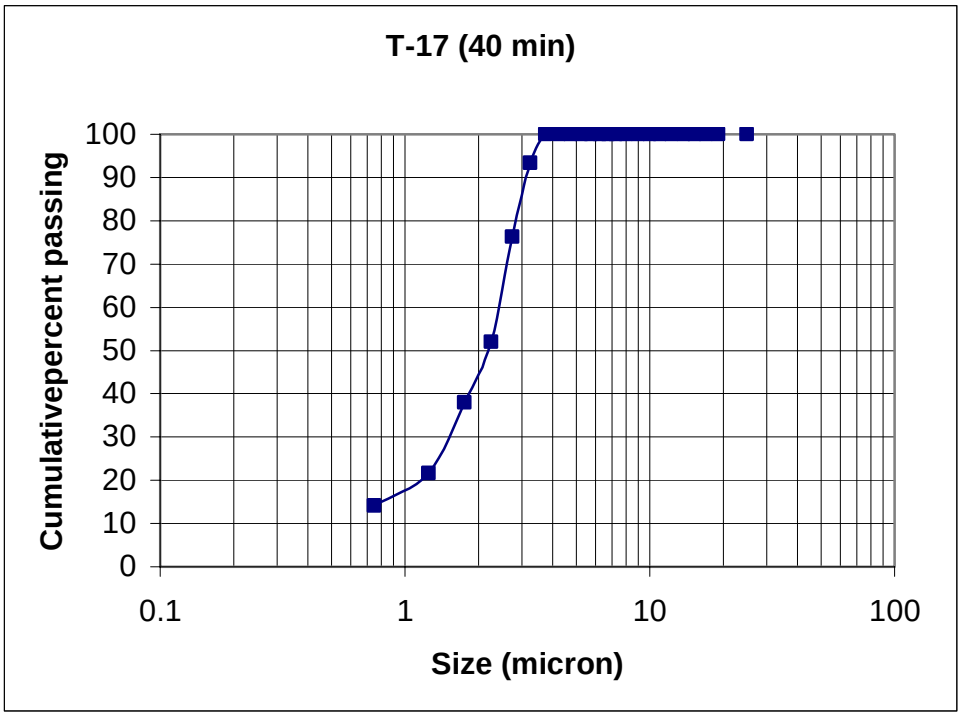


Figure 6.66: Product size distribution of Test-17C.

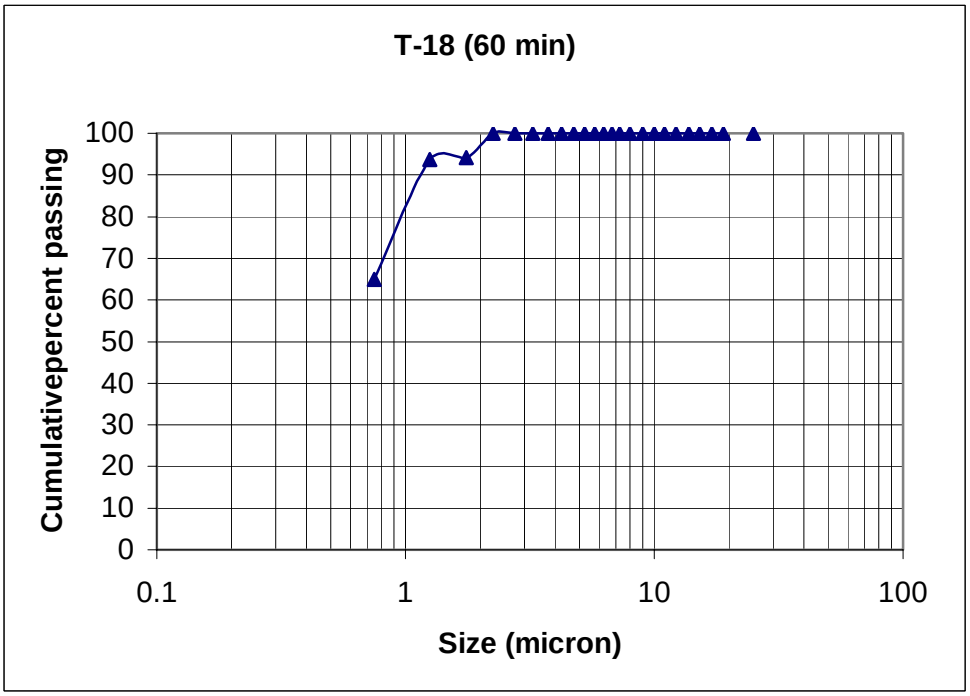


Figure 6.67: Product size distribution of Test-18C.

## 7. DESIGN OF RM-2 MILL FOR PILOT FACILITY

The work planned as proposed in the project covers the Task 4 and is given below:

**Task 4**: Based on the testing analytical data from the prior tasks, the contractor will develop a conceptual design of a larger scale RM-2 Mill for INEEL Pilot Facility. The capacity of the larger mill is estimated to be 8 kg of HEU ($UO_3$) per day or 40 kg per day total $UO_3$. the design specifications will include, but not necessarily limited to: grinding media removal, radiation shielding, safety requirement, product temperature control, remote handling, product packaging, grinding media packaging, exposure and infrastructure support requirements, mill and canister construction, sampling and non-destructive analysis techniques, and abnormal operating concerns and responses.

### 7.1 Pilot RM-2 Mill Facility

The conceptual design of the pilot blending facility is proposed here. It is a facility for highly enriched uranium oxide stored at the Idaho National Technology and Engineering Center (INTEC). In particularly the area restriction posed by INTEC has been taken into account. However the facility is equally applicable for other blending sites where more area is available. The pilot facility is to be located in the vicinity North Vault of CPP-651 at INTEC.

The space available for dry blending facility is an area of 52x20 ft. Therefore the pilot facility design is intentionally narrowed to fit this area, while a larger area would be much more convenient in many ways.

It is presumed that a suitable building with over head cranes, ceiling exhaust and lighting is available. There are no unusual infrastructure support requirements. The weight of RM-2 mill can be readily handled by a concrete floor with the machine bolted to the floor. The following description pertains only to the floor area of 52x20 ft. the floor area would be divided into three principal areas: feed loading area, blending area and product handling area, each separated by

walls, doors, walk ways etc. The general floor plan is shown in the Figure 7.11a. The 3D view of the floor plan is shown in Figure 7.1b. The three major areas with a few more details are shown in this figure.

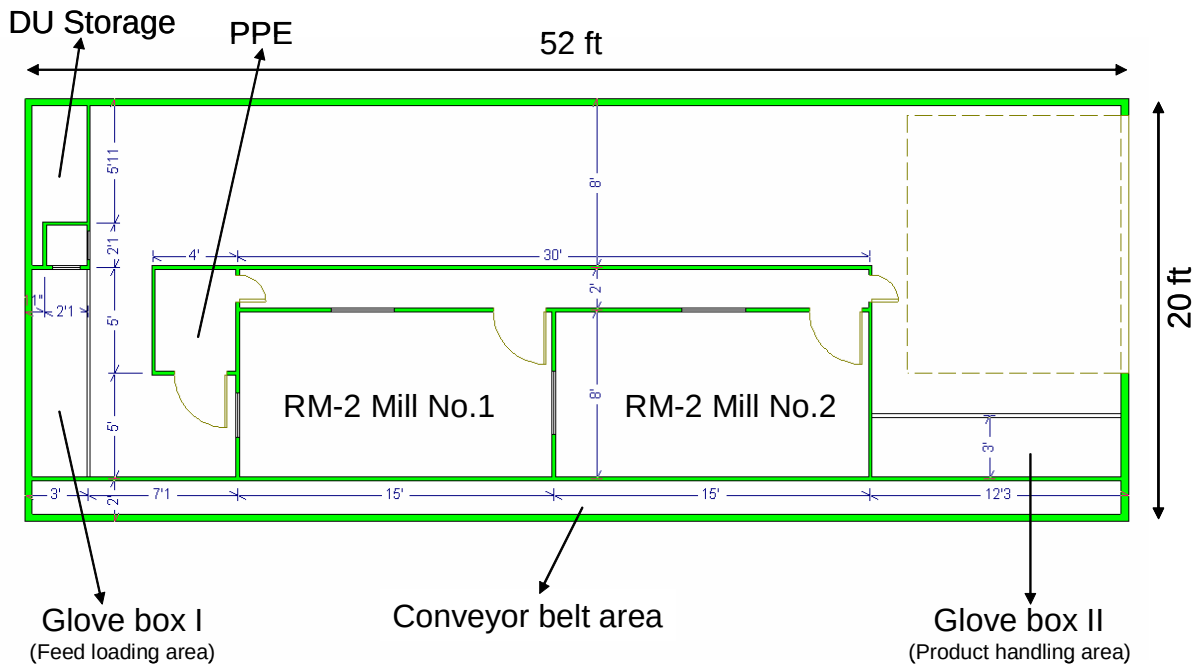


Figure 7.1a: The general floor plan of the proposed pilot mill facility at INEEL.

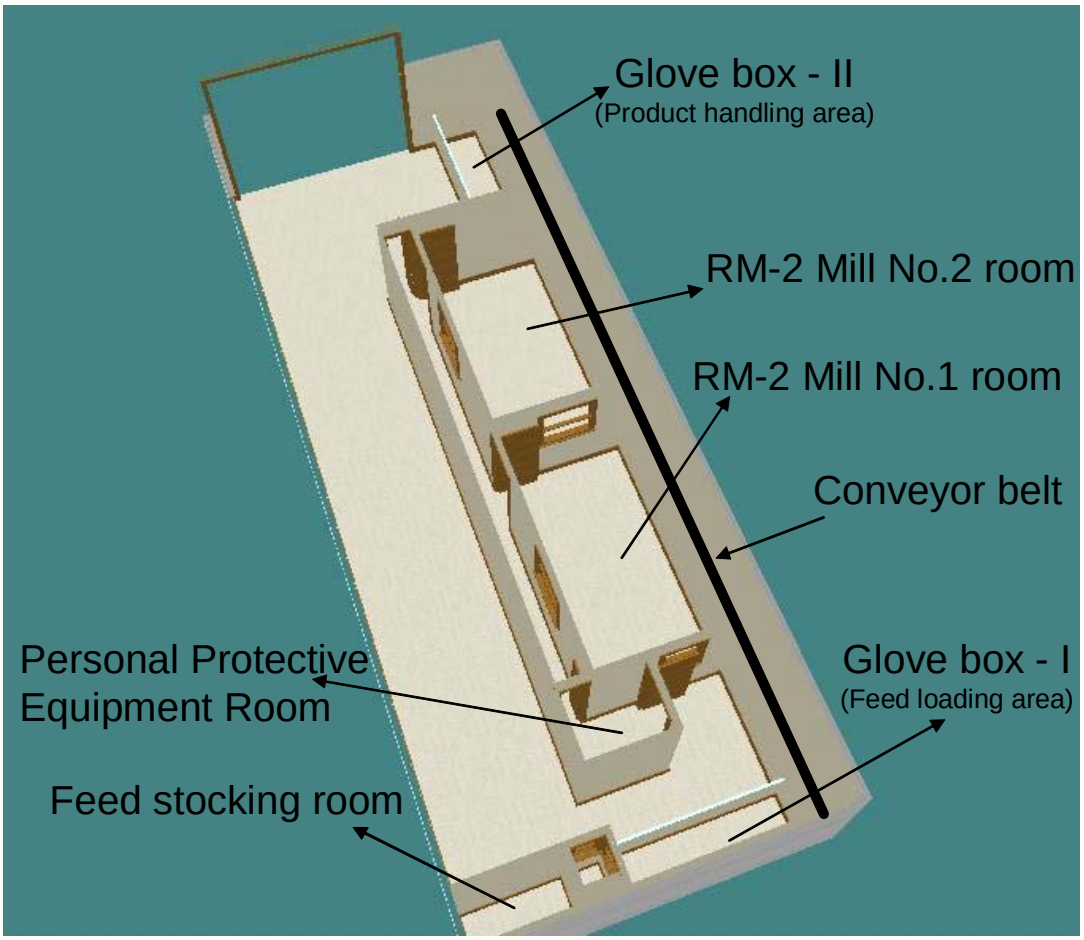


Figure 7.1b: The 3D view of the proposed pilot mill facility.

### 7.1.1 Feed loading area:

The primary purpose of this 18x2 ft area is to bring in the HEU, DU and grinding balls. Store these three feed stock items and dispense prescribed amount of each stock into the canister (The milling canister used in the RM-2 mill is referred as canister here in after). This area receives the canisters and grinding media coming on the return belt conveyor. Packets of pre-weighed quantities of grinding media, HEU and DU are prepared in this facility. The weighing and preparation are done inside Glove box-1. The canister is loaded with all of the above three

materials. However during filling, the canister is filled with layers of balls, HEU and DU. In particular, the three packets could be subdivided into four portions each. Next, a portion of grinding balls, HEU and DU is transferred to the canister in that order. That completes loading the first portion of the four portions. Likewise, the three other portions can be layered into the canister. The canister is set standing on its circular face so that layering fills through the height of the canister.

### 7.1.2 Blending area

There are two RM-2 mills located in this area. Each mill is housed in a separate room. The design of the RM-2 mill is given in section 7.2 of this report. A specially designed cart transports the canister from the forward belt conveyer to the RM-2 mill. Then the canister is locked in place in the cage of the RM-2 mill. The electrical controls for operating the mill are situated outside the room. Operators watch the mill operation via a secure glass window. The RM-2 mill is surrounded on all four side and ceiling by impact mesh walls. In other words the four walls and a ceiling made up of wire mesh surrounds the RM-2 mill. This mesh wall must be capable of withstanding an impact of 100 psi. The purpose of the mesh wall is to contain any flying fragments in the unlikely event of a mechanical failure.

### 7.1.3 Product handling area

This is a low security area since the material entering this area has been down blended. This area uses a glove box to control dust and radiation hazards. A vibrating screen, 3 ft in diameter (Sweco™ screens) is used for separating the grinding balls from the blended stock. The blended

stock would be directly discharged into 6M-2R shipping containers. The empty canister is placed on the return belt conveyer. The empty canister is picked up in the feed loading area for the next blending cycle. The grinding media is discharged from the vibrating screen on to a drum. It would be desirable to wash the media and filter the wash water to recover residual blended powder sticking to the grinding media. From an operational point of view this is an unnecessary step. However, from a material balance and material accounting point of view this step must be further refined. The container of grinding balls is placed on the return belt conveyer for delivering to feed loading area. The 6M-2R shipping containers leave from this area for transportation to a waste or reprocessing site.

### 7.1.4 Conveyer system and material flow

A pair of belt conveyers, termed forward belt conveyer and return belt conveyer, run from the feed loading area to the product handling area. The conveyer belts location is illustrated in Figure 7.1a and 7.1b. As shown in the figure the conveyer belt is located on the west end of the area while operators and service personnel move from area to area on the east side. The conveyer system may be located adjacent to the west wall of the building (the directional markers, east and west, are used relative to layout in figure 1 only). The forward belt carries the loaded canister from the feed loading area to RM-2 mill No.1 room or RM-2 mill No.2 room. After processing the canister in the RM-2 mill, the canister is once again returned to the forward belt. Next, the canister enters product handling area. The return belt conveyer is for transporting material from product area to feed area. The empty canister and drums of used grinding media are placed on

the return belt. These two items are picked up from the belt in the feed handling area. Thus, access stations for the belt are provided in each of the three areas.

### 7.1.5 Bar code system

The bar code system is provided for assuring process material flow and blending. Figure 7.2 shows a schematic of the five bar code stations. At these stations bar codes are affixed on the container and/or read by a central control computer. The bar code system assures certain unwanted scenarios. Following is a partial list of protections and preventions. The actual operation may require a much broader list.

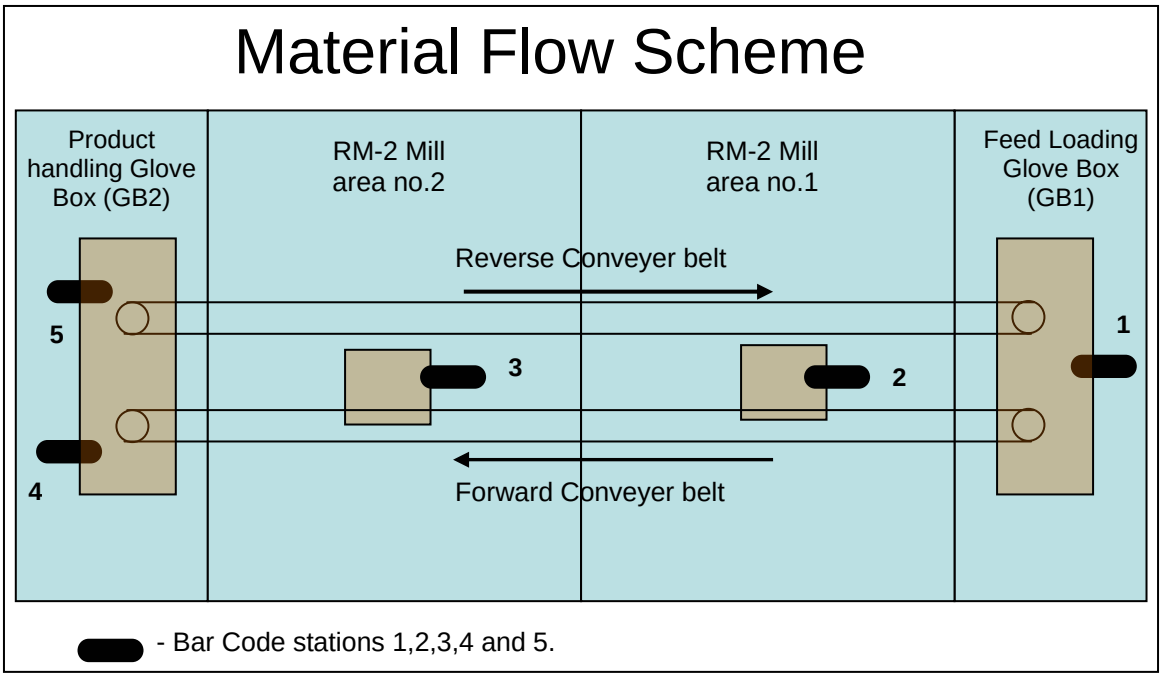


Figure 7.2: Material flow scheme and bar code system.

### 7.1.6 Protection and prevention measures

Protection:

1. Only loaded canister from feed handling area arrive at RM-2 mill no.1 and RM-2 mill no.2 stations.
2. The loaded canister undergoes prescribed time of grinding/blending in the RM-2 mill. Assure that the canister gets processed in the RM-2 mill.
3. Processed canister from RM-2 mill area must report to product handling area first.
4. Blended product in each of ES-2100 and 6M-2R shipping drum is assigned the same bar code as the processed canister from which the material was removed. Thus, the product leaving in shipping can be identified and if necessary back traced to the process schedule.
5. Each canister is assigned a new bar code as it enters the feed handling area.

Prevention:

1. Loaded canister shall not go to product area without being processed in the RM-2 mill.
2. Loaded canister from RM-2 mill area shall not leave without being processed in the mill for a prescribed amount of time.
3. Processed canister from RM-2 mill no.1 shall not enter RM-2 mill no.2 area and vice versa.
4. Processed canister from the two RM-2 mill areas shall not return back to the feed handling area.
5. Processed canister entering product area shall undergo material screening and grinding ball removal.

**General security precautions:**

1. The canister wall structure must be examined periodically for structural integrity and failure prevention. The time line for canister replacement is beyond the scope of this study.

2. Grinding balls are continually being used in the pilot facility. As a result some degradation of the balls is to be expected. However, the small amount of degraded alumina debris moves along with the processed material into shipping containers. It is anticipated that high quality alumina grinding balls can withstand many cycles of RM-2 mill operations. However, the alumina balls must be inspected for degradation in the product handling area. If necessary, these balls must be replaced with a fresh stock of media periodically.

## 7.2 RM-2 Mill Design Details:

The RM-2 mill technology was developed at the University of Utah. U.S. Patent No.6086242 issued on July 11, 2000 under the title “Dual Drive Planetary Mill”, covers key features of this technology. In this section, design details of the RM-2 mill for use in the pilot facility are given. A series of mechanical drawings are shown here for ease of construction and assembly. A few photographs of the RM-2 mill used in the current testing phase are also shown to further clarify the design and construction.

The mill is based on the principle of planetary ball mill operation, wherein a centrifugal field of high magnitude is generated to grind particles. Simply stated, the ball mill, instead of operating in earth’s gravitational field, now operates in the centrifugal field which is ten folds higher than the gravitational field. A pair of gyration arms holds two canisters in between the arms. To balance the weights the canisters are situated at both ends of the arm. A shaft running through the center of the pair of gyration arms is connected to an electrical motor via pulleys. Thus, as the gyration shaft spins a centrifugal field is generated. Now the canisters experience a centrifugal field of 30G for a gyration arm radius of 0.343 meters spinning at 300 rpm. In addition, the canisters self-rotate around their own central axis. The patented design uses a pair of motors, and a clever system of shafts and pulleys to generate any desired centrifugal field and any desired critical speed (or self rotational speed) of the two canisters. The schematic of the RM-2 mill, shown in Figure 7.3, illustrates the overall mechanical design. It shows the pair of gyration arms, the two canisters held at each end of the gyration arm and the power transmission pulleys. A photograph of the RM-2 mill, shown in Figure 7.4 further illustrates the design concept. On the

right side is the gyration shaft and pulley. On the left side, the left most pulley transmits power from the rotation-motor to rotation-shaft. All the components of the mill which helps in self rotation of the canisters are given the qualifier “rotation”. A pair of pulleys adjacent to the left gyration arm transmits power to canister shafts. Since the gyration shaft is independent of the rotation shaft each shaft can be operated at any desired speed. A key feature of this mill is that, a very high centrifugal field can be imposed on small diameter canisters. The high centrifugal speed causes rapid grinding and blending.

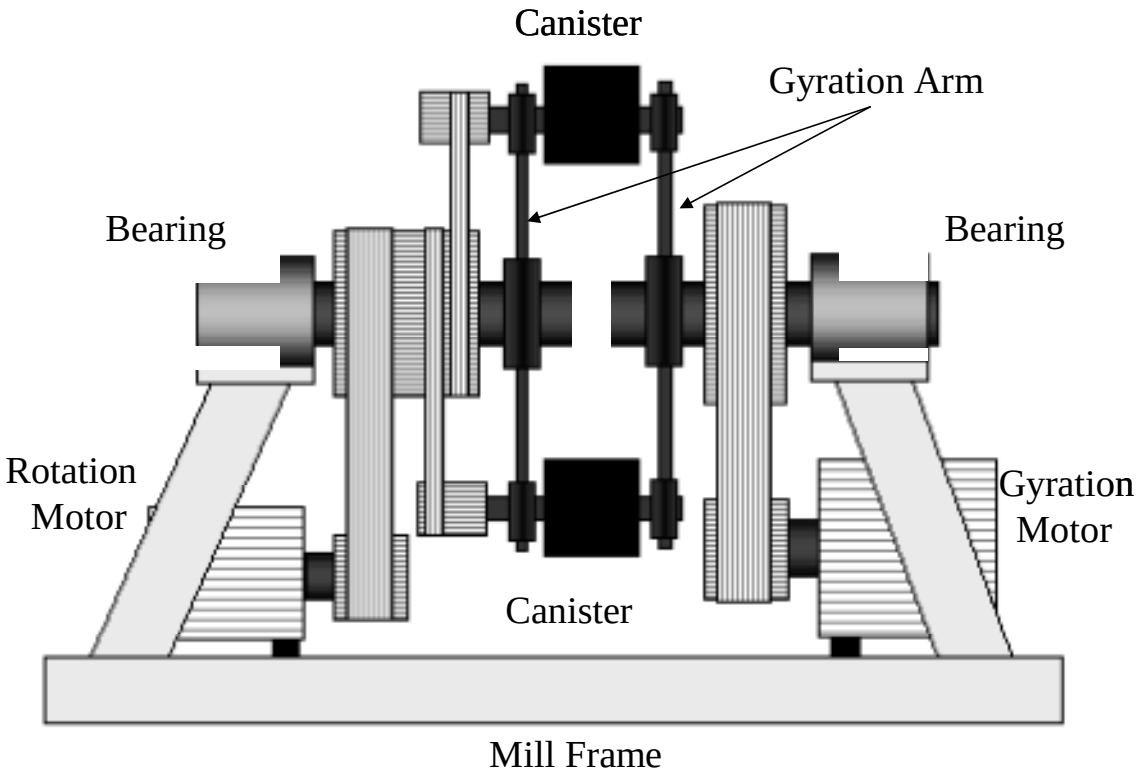


Figure 7.3: Schematic of the RM-2 Mill.

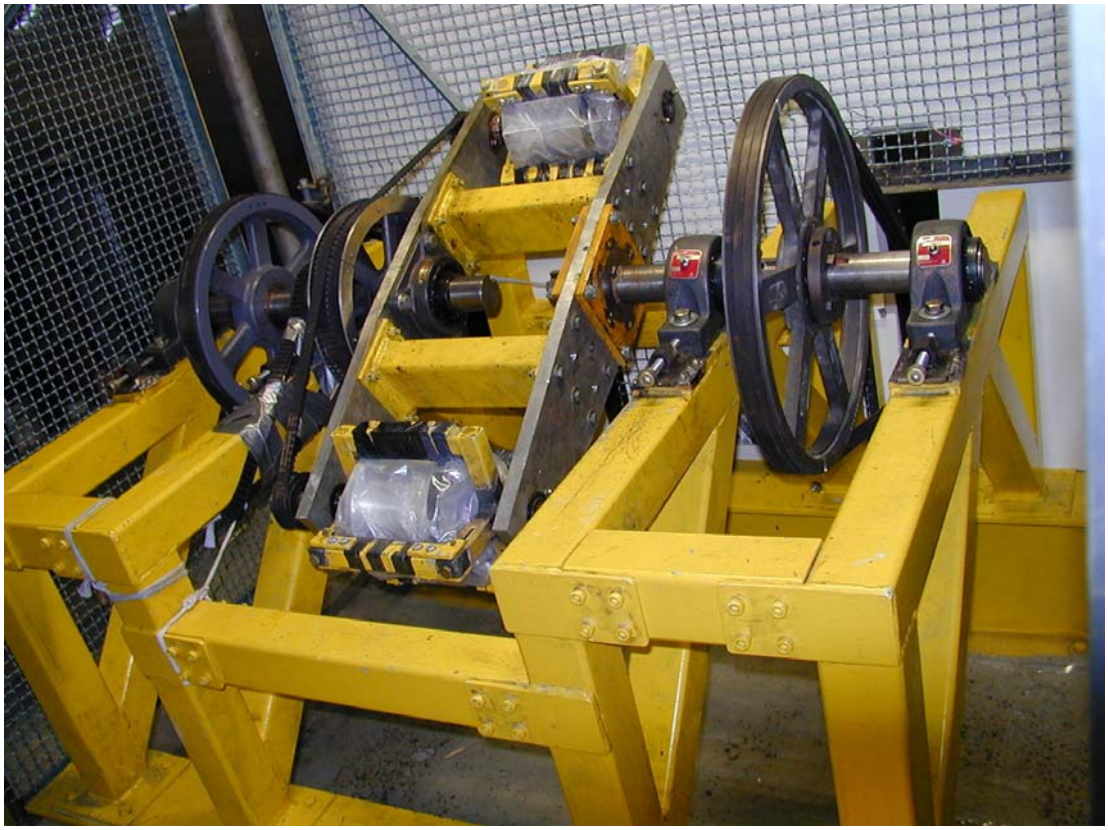

Figure 7.4: A view of RM-2 mill showing the gyration arm holding the pair of canisters in the horizontal position.

The safety features of the mill are worth noting. The canisters are held in a cage at each end of the gyration arm pair. The cage provides the first level of protection against mechanical failure. The second level of protection is provided by a steel cage enclosing the entire 8x5 ft foot print of the mill. This cage surrounds the mill on call four sides as well as the ceiling. An access door is provided on one side of the surrounding cage.

Further, the motors can be equipped with auto shut-off devices in case there is a mechanical failure of the belts or shafts. The net effect is that there is double safety built into the canisters. Regardless of any failure, the canister containing HEU is retained inside the RM-2 mill housing.

### 7.2.1 Canister design

The canister is a cylindrical body with a tight fitting lid. The design diagram is shown in Figure 7.5 and its enclosing lid is shown in Figure 7.6. Both items are made out of aluminum to save on weight and ease of handling. The total assembly of the canister with lid enclosed is shown in Figure 7.7. To treat 8 kg of HEU (UO3) per day, four canisters are used in a single RM-2 mill unit. A pair of canisters is held on one end of the gyration arm and another pair on the other end of gyration arm. The reasons for using two canisters instead of a single canister are:

- Long cylinders are difficult to handle manually especially when they are filled with grinding media.
- The canister can experience high magnitude of stress in the middle portion, increasing the bending stress. Therefore it can break. Reinforcement in the center can improve its strength. Hence the canister is made of a pair of short cylinders instead of one long cylinder.

The internal diameter of the cylinder is 90 mm with a depth of 416 mm. The canister lid has a circular projection to prevent leaks when the canister is in rotation. To further prevent any leakages, an O-ring is installed in a V-cut on the lip of the cylinder. Neoprine rubber lining of 6mm thickness is provided inside the cylinder as well as on the lid to prevent wear of the internal surface of the aluminum canister.

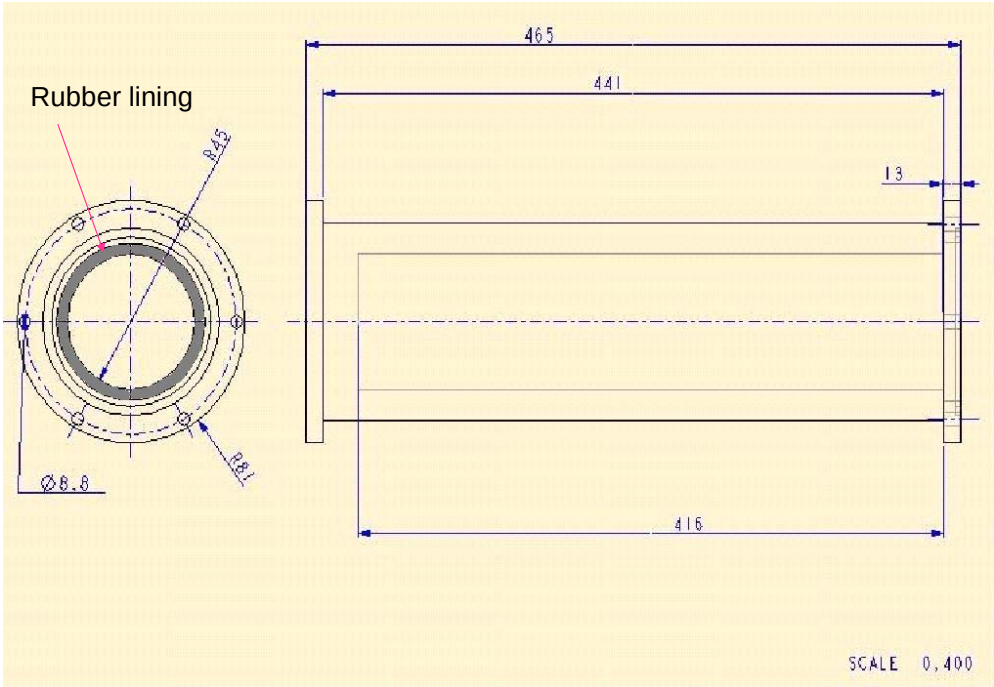


Figure 7.5: Canister base and cylinder

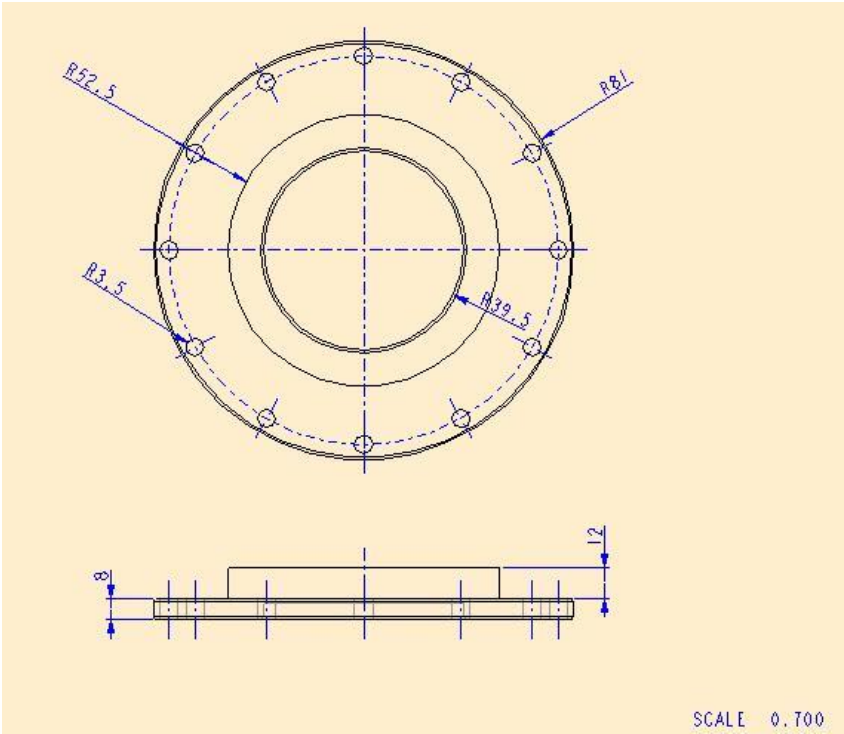


Figure 7.6: Canister lid

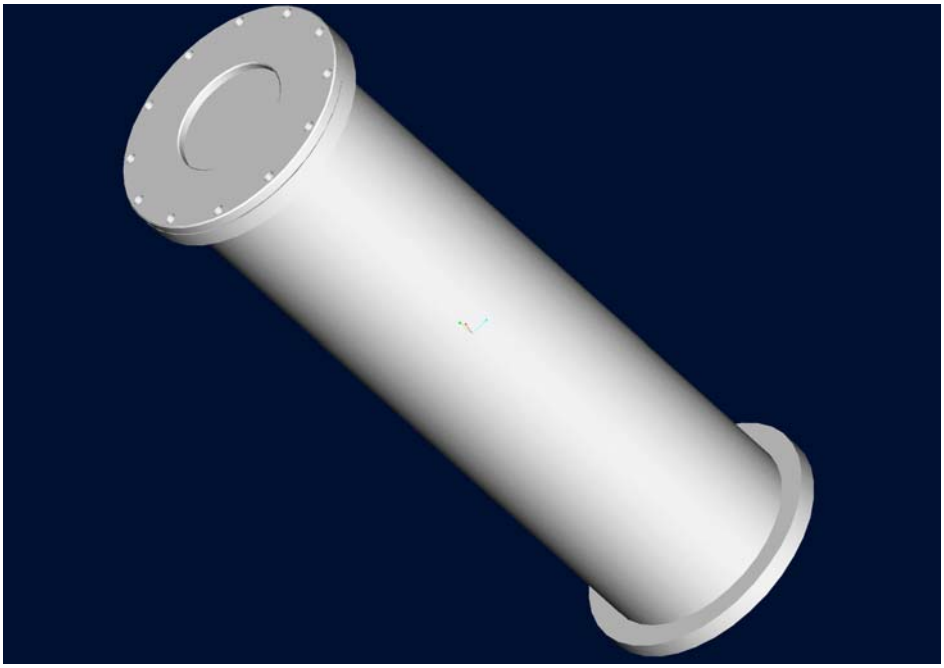

Figure 7.7: Canister Assembly

### 7.2.2 Canister cage assembly

An engineering drawing of the canister cage assembly is shown in Figure 7.8. The purpose is to hold the canister firmly in the RM-2 mill is to ensure the complete transmission of the rotational motion of the cage, to the canister. Hence the frictional tightening between canister and cage is important. The cage is made up of two rectangular shaped frames crossing each other at 90 degrees, thus creating a space between the bars to hold the canister. Figure 7.8 shows the side view, elevation view and plan view of the cage assembly. One inch by one inch cross sectional steel tubes is used to make the cage. The shaft is welded to each end of the cage assembly at the center of cross section as shown in Figure 7.9. The shaft fits into the corresponding pair of bearings on the gyration arm. A view of the cage assembly in the test RM-2 mill can be seen in Figures 7.4. Figure 7.9 shows a view of the pair of canisters in the cage assembly. An additional reinforcement is provided in the cage, between the two canisters, to increase its strength.

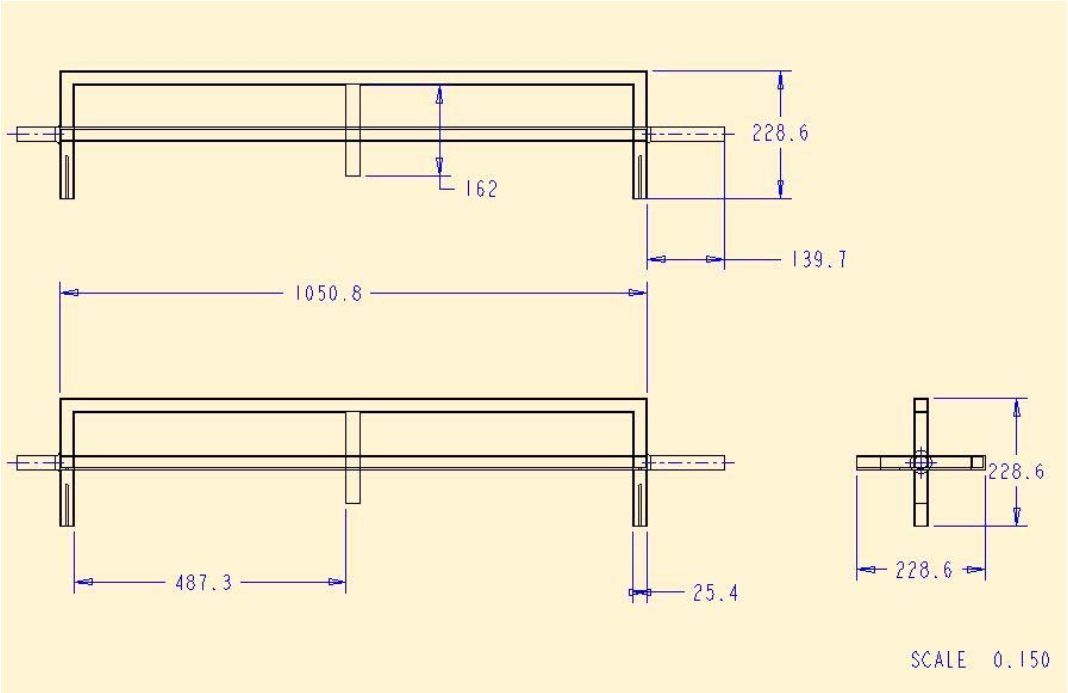


Figure 7.8: Canister Cage

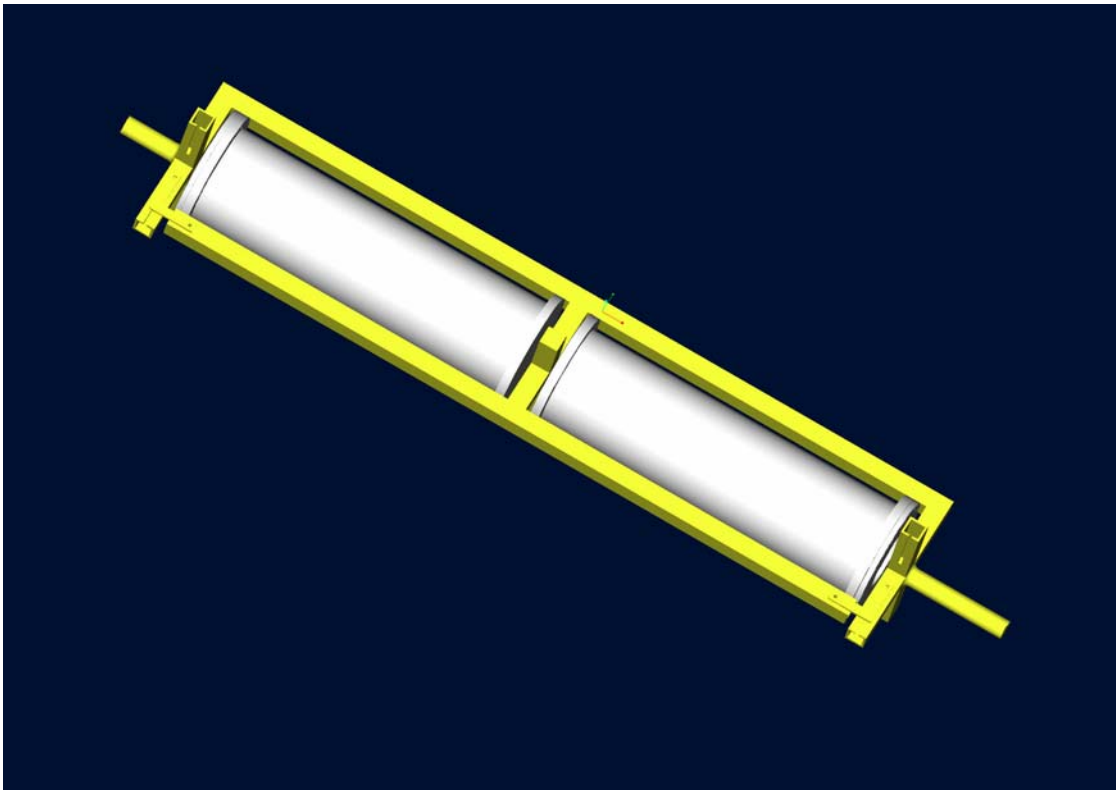

Figure 7.9: Canister Cage Assembly

### 7.2.3 Gyration arm design

The gyration arm is made from an aluminum plate of 25 mm thickness. The plan and elevation views of the gyration arm are shown in Figure 7.10. A hole of 25 mm radius is drilled in the center to fit the shafts for rotation and gyration mechanism. A pair of 12.5 mm radius holes is drilled on both right and left end of this arm to fit the canister cage shaft. The length of this arm, in this case is 775 mm which assures the desired centrifugal field. The two gyration arms are held together by a separator arm (Figure 7.11) made of steel tube of 50 x 125 mm cross section. The separator arm bolted to the gyration arm provides structural integrity. The fully assembled gyration arm, separator arm and canister cage is shown in Figure 7.12. Two steel plates are bolted at the center of the gyration to provide extra strength to withstand the pull of the arm from the gyration shaft. Figure 7.12 shows the canister shafts protruding through the gyration arm (via the bearings). The subsequent section describes the drive pulleys to be fitted on this shaft.

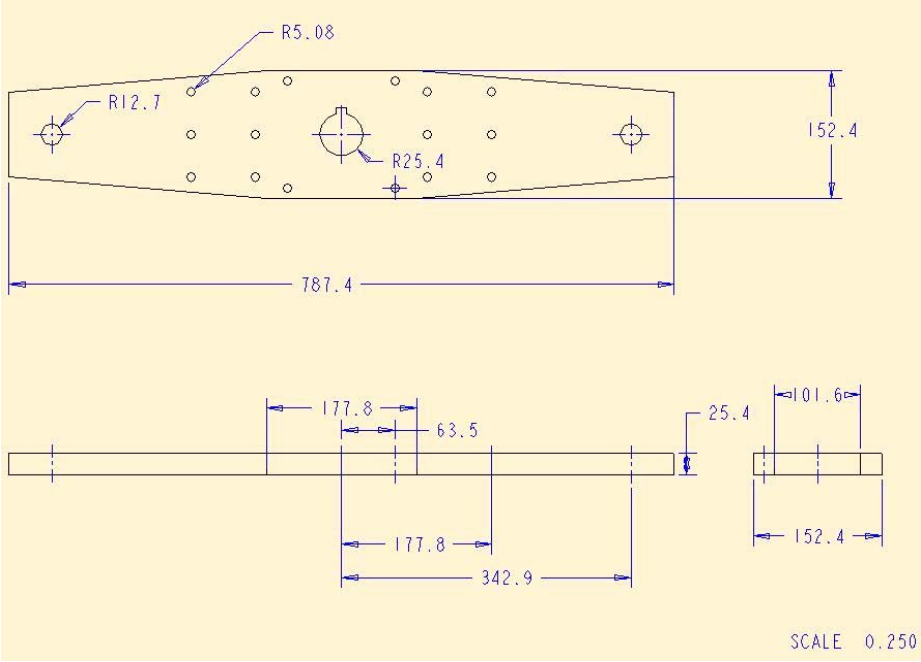


Figure 7.10: Gyration Arm

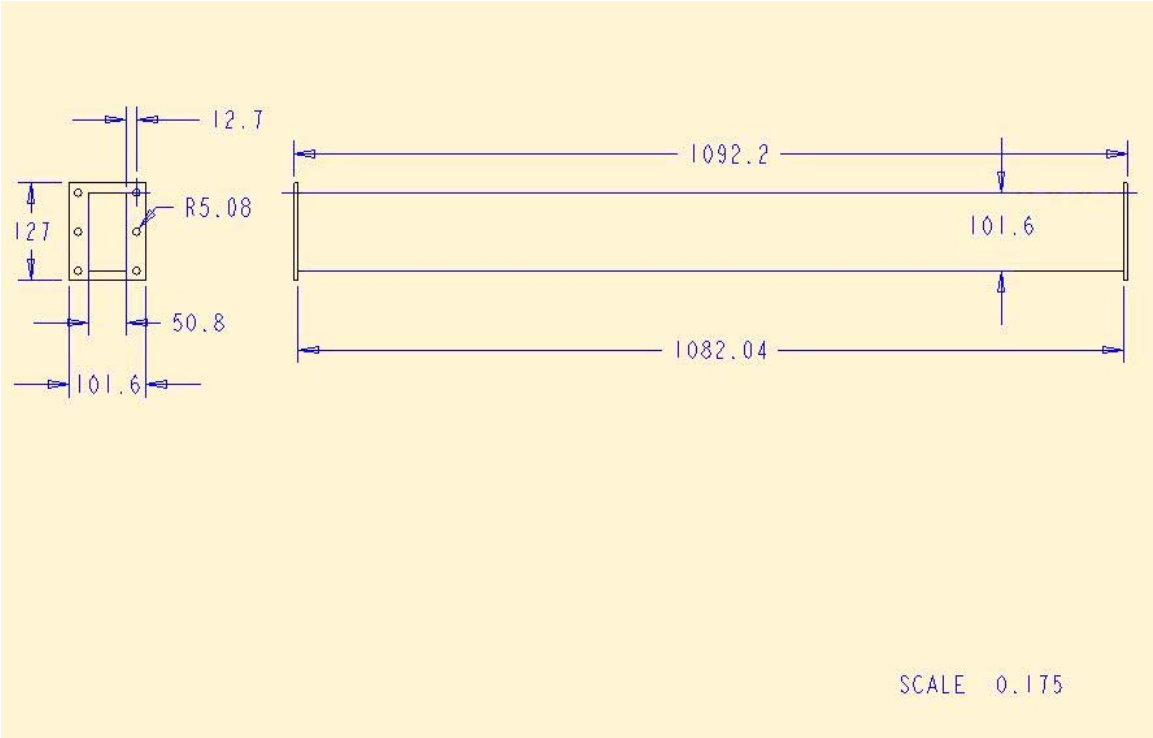


Figure 7.11: Separator Arm

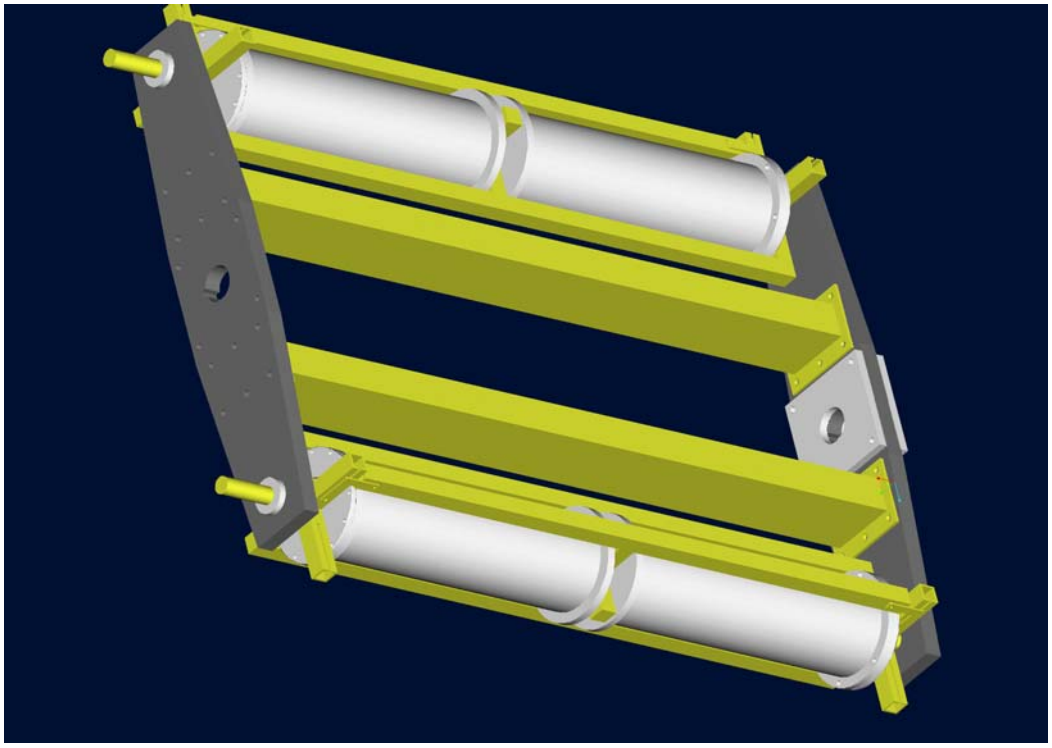

Figure 7.12: Gyration arms with canister

### 7.2.4 Pulley drives

There are four kinds of pulley drives used in RM-2 mill. They are

- Canister cage shaft pulley
- Rotation shaft pulley-1 connecting to canister cage shaft pulley
- Rotation shaft pulley- 2 connecting the variable speed motor
- Gyration shaft pulley connecting the fixed speed motor

Figure 7.13 and 7.14 show the pulley fitted to the canister cage shaft. Two pulleys, one on each canister cage shaft is required. These two pulleys are connected to the rotation shaft pulley-1 with a timing belt. The rotation shaft pulley-1 is shown in Figures 7.15 and 7.16. The timing belts provide positive traction and far less slippage.

The rotation shaft is fitted to the gyration arm via a bearing. In other words, the rotation shaft spins independent of the rotation of the gyration arm. The rotation shaft pulley-2 (Figures 7.17 and 7.18) is fitted on the rotation shaft and is connected to the variable speed motor shaft. In the current RM-2 mill, if this pulley rotates at 328 rpm, it drives the rotation pulley-1 at 328 rpm which makes the cage shaft pulley to rotate at 1312 rpm.

The gyration shaft is keyed to the gyration arm. The gyration shaft pulley fitted to this shaft is shown in Figure 7.19 and 7.20. This pulley is driven directly by the 5 HP fixed speed motor. The power is transmitted via three V-shaped belts to the gyration arm and generates the centrifugal field.

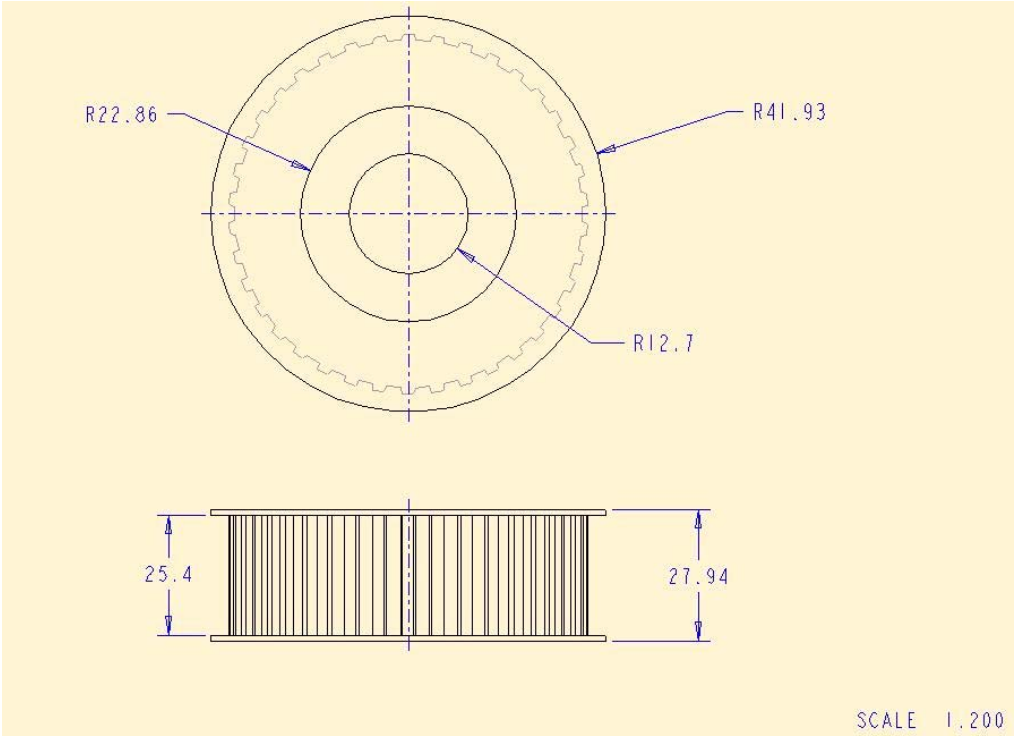


Figure 7.13: Canister shaft pulley

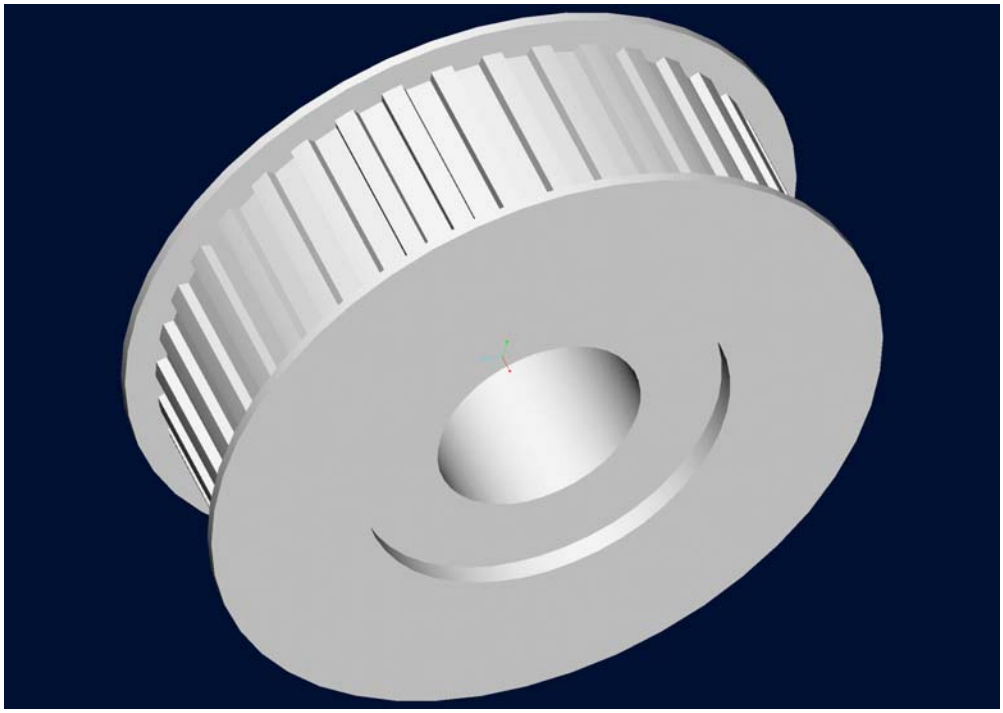

Figure 7.14: Canister shaft pulley - 3D

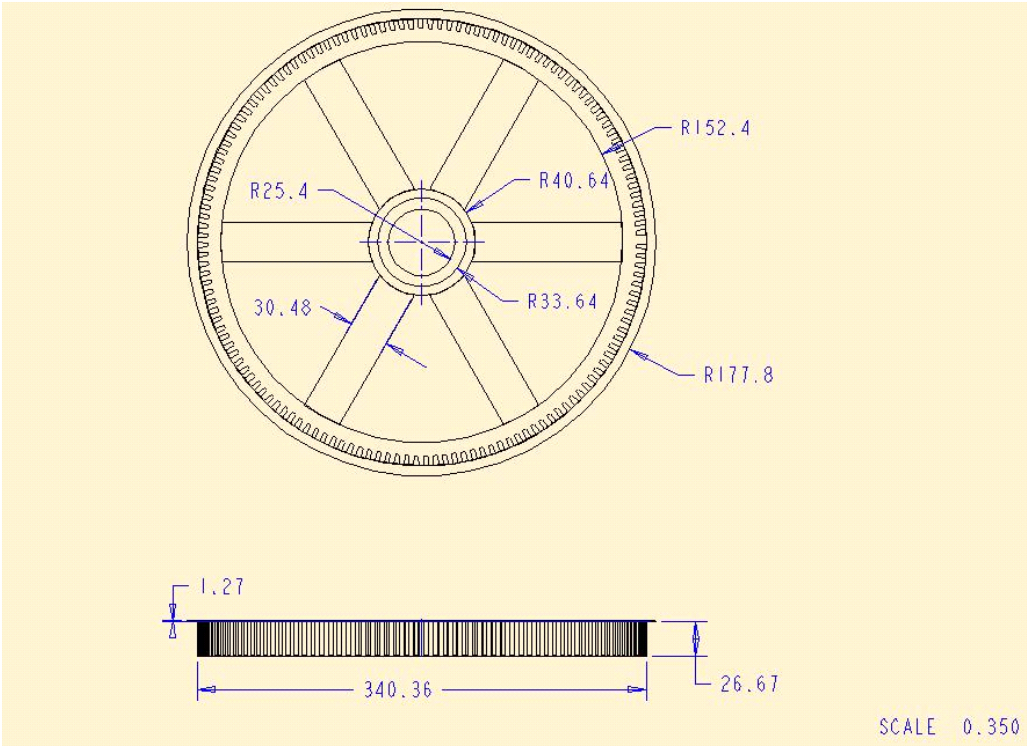


Figure 7.15: Rotation shaft pulley-1

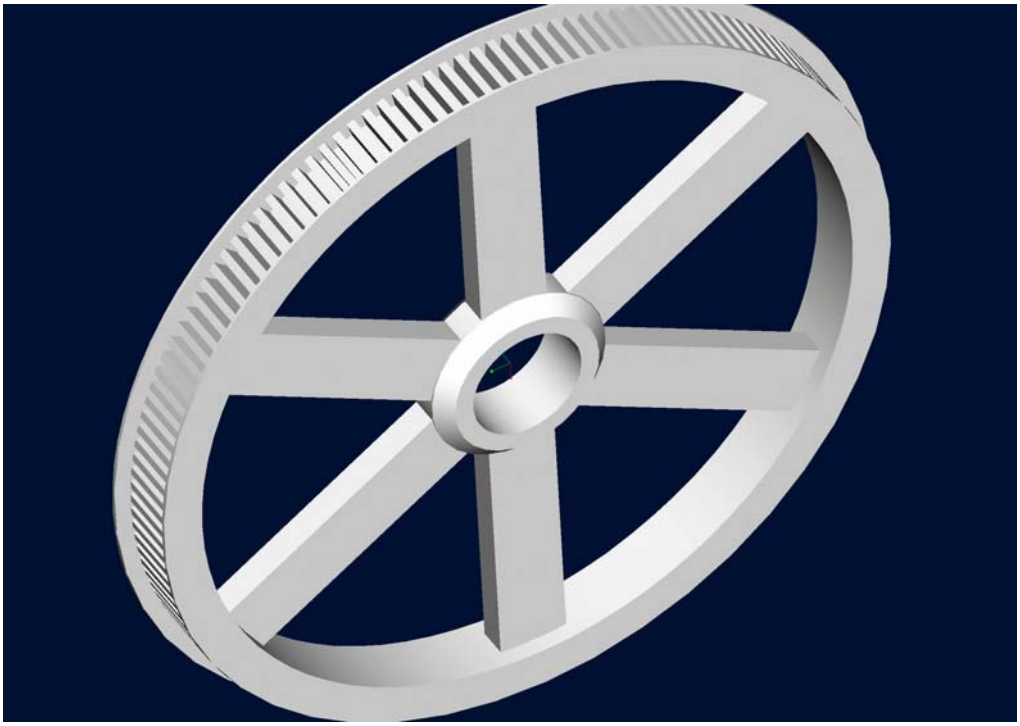

Figure 7.16: Rotation shaft pulley-1 (3D)

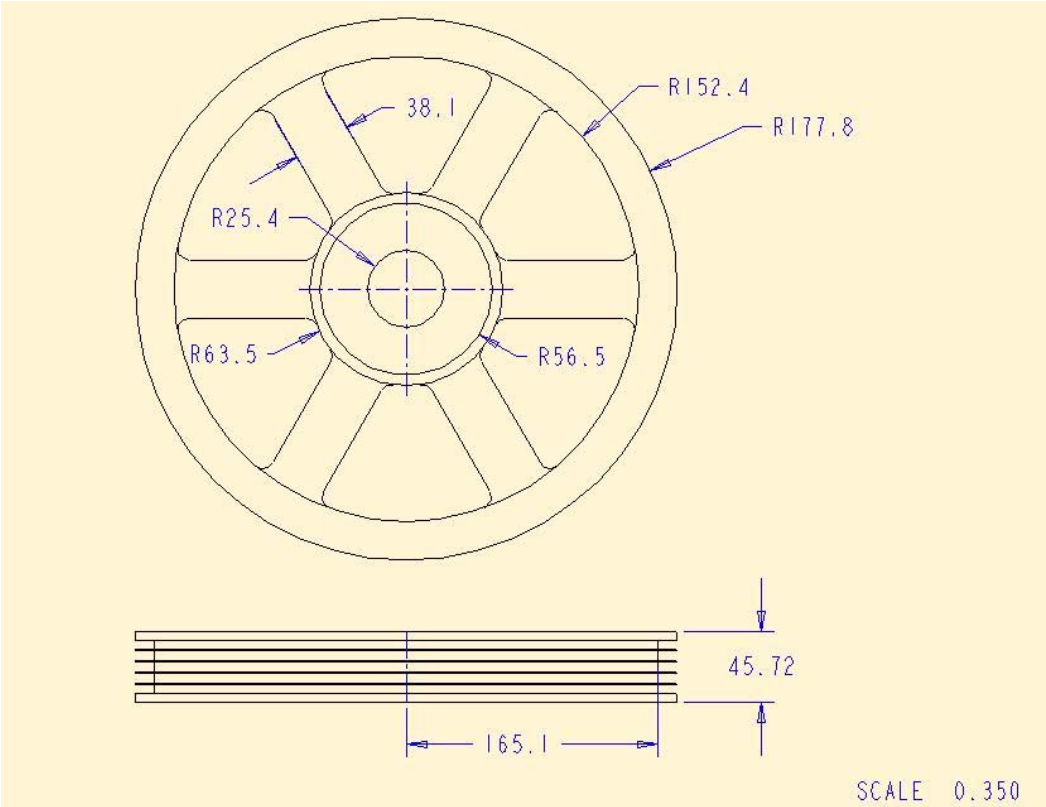

Figure 7.17: Rotation shaft pulley-2

Figure 7.18: Rotation shaft pulley-2 (3D)

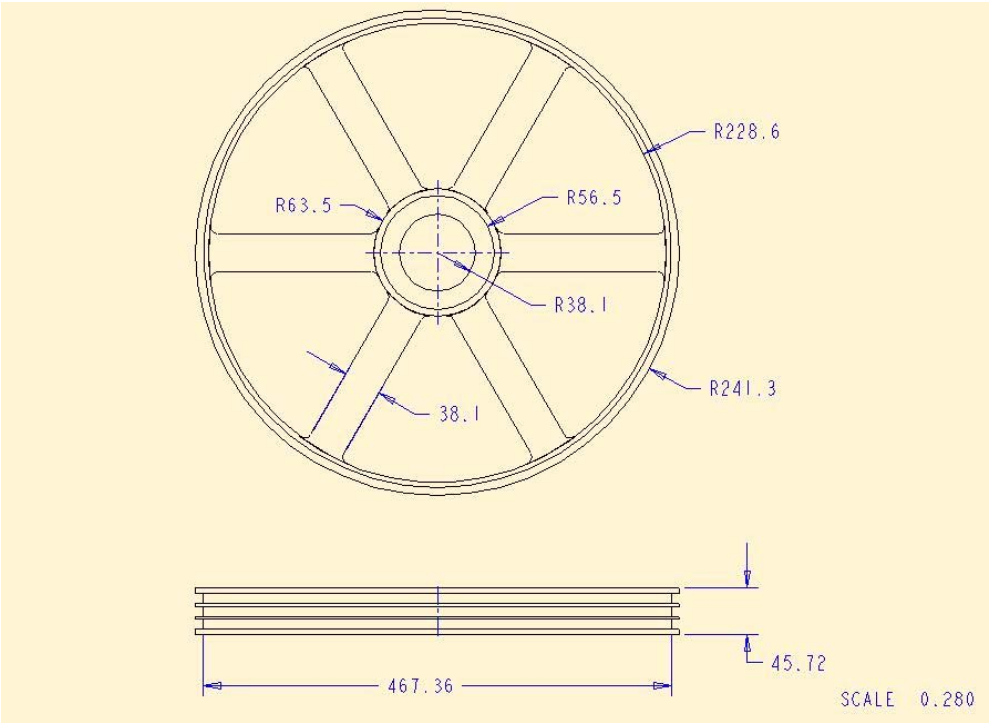


Figure 7.19: Gyration shaft pulley

Figure 7.20: Gyration shaft pulley -3D

### 7.2.5 Bearing assembly

Four bearings are needed to support the shaft on the mill frame. Figure 7.21 shows a single bearing assembly. The bearing uses two adjustable nut-and-bolt lock assemblies on both side of the bearing. This assembly helps in moving the entire bearing across the frame and locking it in places. Since the machine uses two different shafts (rotation and gyration shafts) and two separate motors, alignment of the shafts is a big problem. Both rotation and gyration shafts should be aligned exactly on the same line. Otherwise, the motors will draw excessive amperes and they may break the shafts.

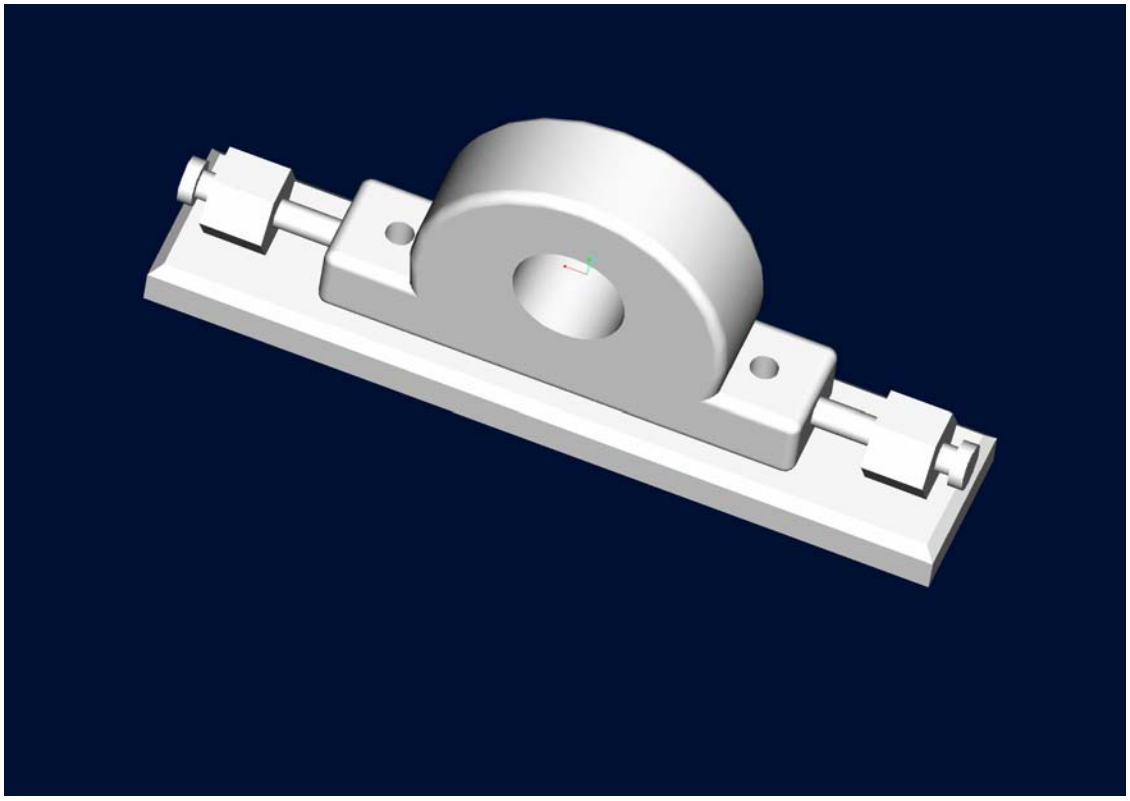

Figure 7.21: Bearing assembly

The mill frame of the RM-2 mill is shown in Figure 7.22. It is made up of 100x100 mm square hollow steel tubes. The bars are fixed to two I- beams that are bolted to the floor. The I-beams are of 300 mm height and 175 mm width. The full assembly of pulleys, shafts and bearings on the mill frame is shown in Figure 7.23.

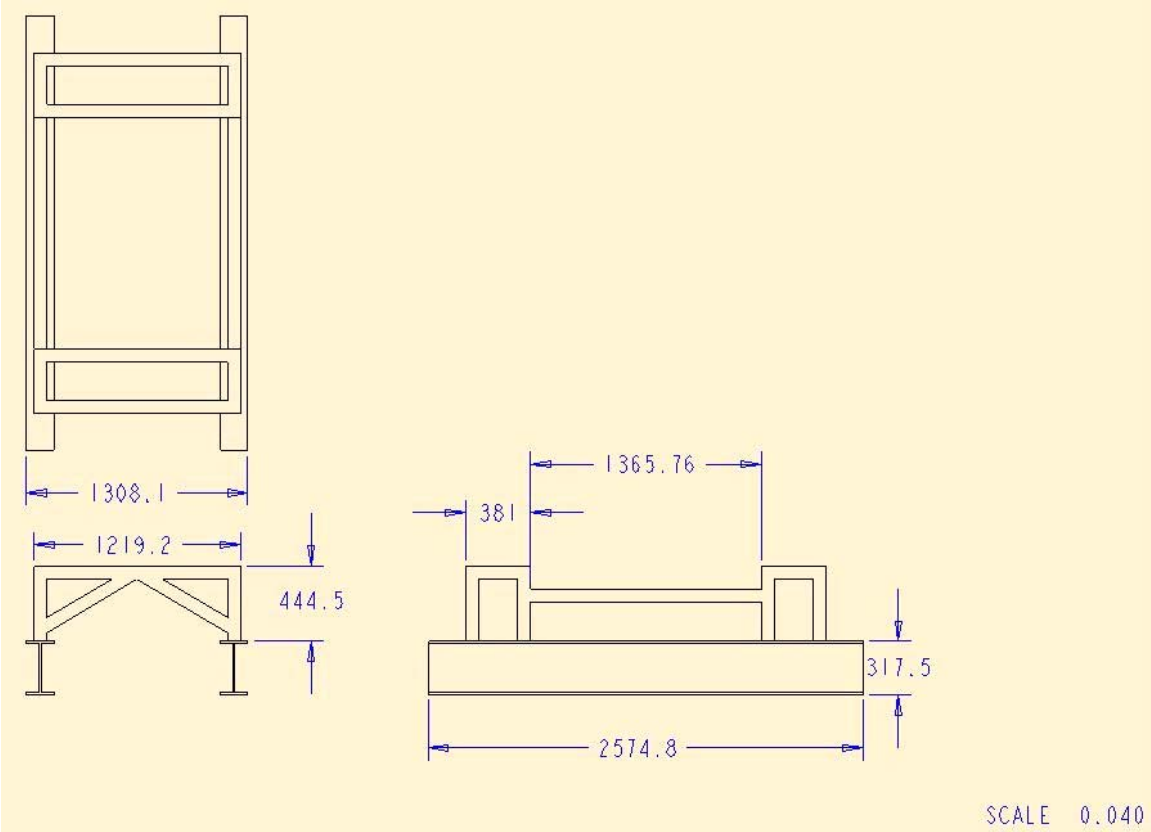


Figure 7.22: The mill frame

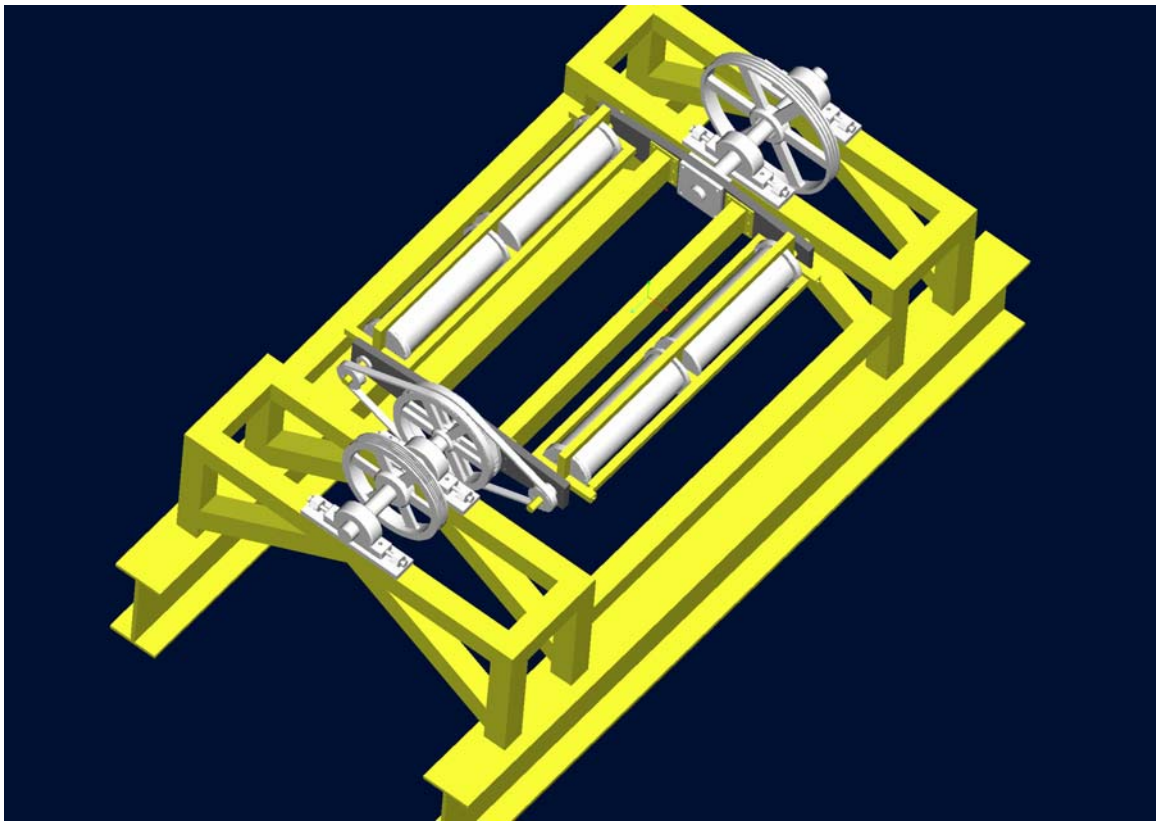

Figure 7.23: RM2-mill assembly

## 8. CONCLUSIONS

The conclusion of the RM-2 technology testing and the subsequent analysis of the NU and DU powders is that the grinding/blending requirements can be met, and the resulting product would have very high proliferation resistance.

The testing of RM-2 technology with same oxide of NU and DU powders has shown that homogenous blending and grinding of the product to a finer size can be achieved. The results have also indicated that 2mm balls produce finer blended product. The product size gets coarser with increase in powder filling fraction in grinding media. Increase in grinding time may increase the product fineness, if required.

The blending test with mixed oxide samples of NU and DU also show that they can be blended uniformly to produce a product that would have very high proliferation resistance. The size distribution of products indicated negative grinding or agglomeration of fine particles at higher grind times. When the starting feed stock NU and DU are finer in size, smaller grind times are enough for blending. Tests with different ball sizes indicated that 2 mm size grinding balls are effective in producing finer product.

The blending tests done with thorium oxide as the surrogate for LWBR pellets also showed expected results. In particular, the mill could reduce the size of 100 mm sintered pellets to 15 microns in one hour. Even though, sintered pellets may be structurally strong RM-2 mill exerts sufficient fracture energy to break these particles. Thus it would be suitable candidate for sown blending ceramic type materials.

The blending tests with the RM-2 mill technology, meet the grinding/blending requirements (reduced uranium enrichment and very high proliferation resistance). Due to the centrifugal forces, size reduction to sub-micron particles occurs in less than 20 minutes. The RM-2 mill technology is readily applicable for dispositioning dry brittle solids. For example, “off-spec” HEU could be dry blended to less than 20% $^{235}U$ enrichment. Then the radiation fields from the storage containers will be reduced, the uranium will no longer require safeguards and the potential for shipping to an "off-spec" aqueous blending site will be significantly improved. This same technology could also be used to dilute waste HEU oxide to less than 0.9% $^{235}U$ for disposal and could also be a candidate technology for dispositioning other fissile materials. Candidate materials include: waste $^{233}U$ oxide, Light Water Breeder Reactor fuel pellets, waste forms of fuel grade Pu, and other small quantities of fissile materials that may need some type of dry pretreatment prior to dissolution for purification and recycle or for immobilization prior to placement in a waste repository.

The major advantages of the RM-2 process are its: fast grinding time, simple design and mechanical reliability. These features make it significantly less costly than utilizing large-scale aqueous processes for disposal of small amounts of fissile material. This process also provides a pre-conditioning treatment that would:

- reduce transportation costs,
- reduce the demand on safe and secure transportation equipment,
- reduce security cost for storage at the sending and receiving sites where the final purification and recycle operations are conducted and
- provide part of the enrichment dilution or blending operation
- help implement ALARA by diluting the strength of the source term e.g., less curies per unit volume and more uranium to help shield the gamma radiation

## 9. BIBLIOGRAPHY

R. Harmon. C. Vitale-Smith, R. N. Henry, “Dry Milling and Blending of High-Enriched Uranium Tri-Oxide” presented at American Nuclear Society- Department of Energy Spent Nuclear Fuel and Fissile Material Management Meeting, Charleston SC, September 8-11, 1998.

R. N. Henry, N. A. Chipman, R. K. Rajamani, “Dry Blending to Achieve Isotopic Dilution of Highly Enriched Uranium Oxide Materials” presented at American Institute of Chemical Engineers Spring National Meeting, Houston TX, April 22-26, 2001.

Ultra-fine Grinding of some Oxides and Non Oxides Materials using the Planetary Mill, M.K. Abdl El-Rehman, N.Ma and R.K.Rajamnai, Ore Dressing/Cevher Hazirlama Journal, issue 5, 2001. P11-23.

R.Henry, N.Chipman, R.K.Rajamani and J.Malhotra, "Nuclear Isotopic Dilution of Highly Enriched Uranium by Dry Blending" Spectrum 2002, August 2002, Reno, Nevada.

R.K.Rajamani, S.Latchireddi, V.Devrani, H.Sethi, R.N.Henry, N.A.Chipman and J.L.Malhotra, “RM-2 Mill: A Technology for Dry Nuclear Isotopic Dilution of Highly Enriched Uranium” International High Level Radioactive Waste Management Conference, March 30-April 2, 2003, Las Vegas, NV.

R.N.Henry, N.A.Chipman, R.K.Rajamani, S.Latchireddi, V.Devrani, H.Sethi, and J.L.Malhotra, Nuclear Isotopic Dilution of Highly Enriched Uranium by Dry Blending Via the RM-2 Mill Technology, Waste Management 2004.

## 10. LIST OF ACRONYMS AND ABBREVIATIONS

| | |
|---|---|
| NU | Natural uranium stock ( 99.3% approx. U-238 oxide and 0.7% U-235 oxide) |
| DU | Depleted uranium stock(99.7% approx. U-238 oxide and 0.3% U-235 oxide) |
| ALARA | As low as reasonably achievable |
| INEEL | Idaho National Engineering and Environmental Laboratory |
| HEU | Highly enriched uranium |
| TVA | Tennessee Valley Authority |
| DOE | Department of Energy |
| SNM | Special Nuclear Material |
| CPP | Refers to a storage vault at INEEL for HEU |
| G | Gravitational field (40G = 40 times the gravitational field) |
| RM-2 | Name designated for the dual drive planetary mill |
| F&O | Functional and operational requirements |
| LEU | Refers to light water reactor fuel |
| S&S | Safety and security |
| U of U | The University of Utah |
| GMTCC | Generic Mineral Technology Center for Comminution |
| NDA | Nondestructive analysis |
| HEPA | A special filter for capturing ultra fine particles |
| RSO | Radiation safety officer |
| QA | Quality assurance |