Techno-Economic Analysis of Hydrogen Production by Gasification of Biomass

Final Technical Report for the Period September 15, 2001 to September 14, 2002

By
Francis S. Lau
David A. Bowen
Remon Dihu
Shain Doong
Evan E. Hughes
Robert Remick
Rachid Slimane
Scott Q. Turn
Robert Zabransky

Work Performed Under DOE Contract Number: DE-FC36-01GO11089

For
U.S. Department of Energy
Golden Field Office
1617 Cole Blvd.
Golden, CO 80401-3393

By
Gas Technology Institute
1700 South Mt. Prospect Rd.
Des Plaines, IL 60018
Phone: (847) 768-0600
E-Mail: Francis. Lau@gastechnology.org

December 2002

Disclaimer

This report was prepared as an account of work sponsored by the United States Government. Neither the United States nor the Office of Energy Efficiency and Renewable Energy (EERE), nor any of their employees, makes any warranty, expressed or implied, or assumes any legal liability or responsibility for the accuracy, completeness or usefulness of any information, apparatus, product, or process disclosed, or represents that its use would not infringe privately owned rights. Reference herein to any specific commercial product, process, or service by trade name, mark, manufacturer, or otherwise, does not necessarily constitute or imply its endorsement, recommendation, or favoring by the United States Government or any agency thereof. The views and opinions of authors expressed herein do not necessarily state or reflect those of the United States Government or any agency thereof.

This report will be available to the public from the National Technical Information Service, U.S. Department of Commerce, 5285 Port Royal Road, Springfield, VA 22161; phone orders accepted at (703) 487-4650.

Acknowledgement

We express our appreciation to the U.S. Department of Energy, Office of Energy Efficiency and Renewable Energy (EERE) for financial support under Contract DE-FC36-01GO11089. We also thank the Sustaining Membership Program (SMP) of the Gas Technology Institute (GTI), the Electric Power Research Institute (EPRI), Hawaii Electric, and the University of Hawaii for providing co-funding for this project. The technical support and guidance received during the course of this project from DOE/EERE Project Manager Mr. Doug Hooker is greatly appreciated.

Executive Summary

Around the world, hydrogen production is sustained through the use of fossil fuels with an end use in chemical production. Biomass represents an alternative, low cost fuel source that has the potential to produce a high value end product, hydrogen. The hydrogen produced can be used for chemical production or as a fuel source. In this study, an assessment of the technical and economic potential for producing hydrogen from biomass gasification was analyzed. The end-use of the hydrogen produced from this system is PEM fuel cells for automobiles.

Three potential feedstocks identified for hydrogen production are (1) sugarcane bagasse, the fibrous by-product of sugar or ethanol production, (2) nut shells, and (3) switchgrass, a perennial forage crop under development as a dedicated bio-fuel. The resource base of these three candidates was analyzed for cost, availability, and process scale. Consolidated bagasse is available in quantities of 150 to 700 tonnes/day, in various parts of the world, based on the centralization of sugar production plants in particular areas. The addition of cane trash fiber in the consolidation, increases the range from 700 – 5200 tonnes/day. The reported delivered costs of bagasse is from $29 /tonne in India to $32-40 /tonne in Hawaii. Nutshell availability was determined for the state of California for almond and walnut shells where there is approximately 200,000 tonnes of resource annually. Not all of it is usable due to established uses for the material. A nutshell mix consisting of 40% almond shell, 40% almond prunings, and 20% walnut shell is recommended to increase the overall resource base. Nutshells can be delivered from $12 – 44 /tonne. Delivered switchgrass costs are from $27 – 46 /tonne for the United States. Since switchgrass would be used as a dedicated energy crop, it is available in the amount that can most economically be used.

Initial design considerations were analyzed at 500, 1000, and 2000 tonnes/day for bagasse and switchgrass; nutshells were analyzed at 500 tonnes/day.

Research of biomass feeding systems determined that a two parallel lockhopper feeding system is currently the best choice for feeding systems. This is due to its well-proven technology and the extensive testing done with various biomass fuels. However, the Fortum piston feeder deserves further investigation when a feed system has been fully developed.

A GTI proprietary gasifier model along with a Hysys® design and simulation package were used to simulate hydrogen production by gasification of biomass. Simulations were run at 500 tonnes/day of biomass fed at moisture contents of 20% for bagasse, 12% for switchgrass, and 12.5% for the nutshell mix. A scaling factor of 1 can be assumed to determine hydrogen production for increased feed rates. The cold efficiency for bagasse, switchgrass, and the nutshell mix are 63%,64%, and 64%, respectively. Hydrogen production rates (g H_2 / kg dry biomass) are 78.1 for bagasse, 84.1 for switchgrass, and 88.3 for the nutshell mix.

Sensitivity analyses were conducted for each feedstock and plant size, comparing various capital costs, feedstock costs, and internal rates of return (IRR). The table below summarizes hydrogen production costs for the three feedstocks at various dry feed rates.

	Gasifier Feed Rate	Hydrogen Produced		Feedstock Cost	Capital Cost	H_2 Cost 15% IRR
Feedstock	**Dry Tonnes / Day**	**Tonnes / Day**	**Nm^3 / Day**	**US $ / GJ**	**US $ Million**	**US $ / GJ**
Bagasse	400	31.2	347,000	1.50	37.0	9.13
	800	62.5	695,000	1.50	61.1	7.64
	1600	125	1,390,000	1.50	100.9	6.57
Switchgrass	440	37.0	412,000	1.50	36.5	7.95
	880	74.0	824,000	1.50	60.6	6.73
	1760	148	1,648,000	1.50	100.9	5.86
Nutshell Mix	438	38.7	488,000	1.50	36.3	7.72

Summary of Gasification Results and Hydrogen Costs

Hydrogen from biomass can be used in a variety of applications: chemical feedstock, fuel gas, or electric power from large, stationary fuel cells or small, local fuel cells. Hydrogen, as a fuel gas, provides an alternative to fossil fuels and produces an environmentally clean solution to transportation in the future. However, there are still some technical, economic, and psychological challenges that must be overcome before hydrogen can be introduced into the market as a substitute fuel.

A preliminary assessment suggests hydrogen can be produced economically from biomass. There are still challenges that must be overcome, but as technology improves, natural gas prices increase, and government incentive programs evolve, biomass gasification will present an economical way to produce hydrogen for use in PEM fuel cells and other energy consuming systems.

Table of Contents

Acronyms and Abbreviations ix
1 Introduction 1
2 Biomass Resource Assessment 2
2.1 Feedstock Cost and Availability 2
2.2 Process Scale Determination 4
3 Hydrogen Production by Gasification 5
3.1 Summary of Pressurized Biomass Feeding Systems 5
3.2 Gasifier Model and Simulation 6
3.2.1 Approach and Assumptions 8
3.2.2 Simulation Results 9
3.3 Gas Purification and Clean Up 13
4 Economics of Hydrogen Production 16
4.1 Methodology 16
4.2 Sensitivity to Capital Cost 18
4.3 Sensitivity to Feedstock Cost and Summary 19
4.4 Sensitivity to Internal Rate of Return (Capital Recovery Factor) 20
5 Assessment of Public Programs 21
5.1 Implications 21
5.2 Biomass Gasification Share of Bottom Line Cost of Hydrogen 22
5.3 Biomass Gasification: Costs for a Demonstration Plant 22
6 Barriers to Commercialization 24
6.1 Technical Barriers 24
6.2 Economic Barriers 25
6.3 Psychological Barriers 25
7 Conclusion 27
8 References 28
Appendix A – Biomass Resource Assessment and Process Scale Determination 29
Appendix B – Identification / Evaluation of Solids Handling Systems 80
Appendix C – Unit and Conversion Factors 100
Appendix D – Bagasse Process Design and Streams 102
Appendix E – Switchgrass Process Design and Streams 108
Appendix F – Nutshell Mix Process Design and Streams 114
Appendix G – Commercialization Barriers 120
Appendix H: Economic Sensitivity to Capital Costs 134
Appendix I: Economic Sensitivity to Feedstock Costs 138
Appendix J: Economic Sensitivity to Internal Rate of Return 142

List of Figures

Figure 1 - Block Flow Diagram for Bagasse Feedstock 7
Figure 2 - Block Flow Diagram for Switchgrass and Nutshell Mix Feedstocks 8

List of Tables

Table 1 - Summary of Biomass Resource Assessment 4
Table 2 - Operating Variables and Capital Cost for Different type Feeders 5
Table 3 – Proximate and Ultimate Analyses of Feedstocks 9
Table 4 - Equipment Outlet Stream Information (Basis: 500 tonnes/day fed biomass) 10
Table 5 - Performance Summary 12
Table 6 - Hydrogen Atomic Balance for Biomass Feedstocks 12
Table 7 - Reformer and End-Use Specifications 13
Table 8 - Summary of Contaminant Concentrations and Temperatures at Various Locations 14
Table 9 - Biomass Gasification Combined Cycle 17
Table 10 - Sensitivity to Capital Costs for Bagasse 18
Table 11 - Sensitivity to Capital Costs for Switchgrass 18
Table 12 - Sensitivity to Capital Costs for Nutshell Mix 18
Table 13 - Sensitivity to Bagasse Feedstock Costs 19
Table 14 - Sensitivity to Switchgrass Feedstock Costs 19
Table 15 - Sensitivity to Nutshell Mix Feedstock Costs 19
Table 16 - Sensitivity to IRR for Bagasse 20
Table 17 - Sensitivity to IRR for Switchgrass 20
Table 18 - Sensitivity to IRR for Nutshell Mix 20
Table 19 - Comparison of Fuel Characteristics 24

Acronyms and Abbreviations

DOE	United States Department of Energy
NREL	National Renewable Energy Laboratory
GTI	Gas Technology Institute
EPRI	Electric Power Research Institute
HNEI	Hawaii Natural Energy Institute
PRC	People's Republic of China
PSA	Pressure Swing Adsorption
GPSA	Gas Processing Supplier Association
TEMA	Tubular Exchangers Manufacturers Association
NASA	National Aeronautical and Space Administration
AGA	American Gas Association
PSE&G	Public Service Electric and Gas of New Jersey
GM	General Motors
PEM	Proton Exchange Membrane
HHV	Higher Heating Value
IC	Internal Combustion
HGCU	Hot Gas Clean Up
IGCC	Integrated Gasification Combined Cycle
NGCC	Natural Gas Combined Cycle
IRR	Internal Rate of Return
CRF	Annual Capital Recovery Factor
SMR	Steam Methane Reforming
tonne	Metric Ton
kW	Kilowatt
MW	Megawatt
GW	Gigawatt
kWh	Kilowatt Hour
MWh	Megawatt Hour
kg	Kilogram
kJ	Kilojoule
GJ	Gigajoule
GJ/h	Gigajoule per Hour
Btu	British Thermal Unit
MMBtu	Million British Thermal Unit
Nm^3	Normal Cubic Meter
MPa	Megapascal
kPa	Kilopascal
psi	Pound per Square Inch
ppmv	Parts per Million by Volume
ppbv	Parts per Billion by Volume

1 Introduction

Biomass represents a large potential feedstock resource for environmentally clean processes that produce power or chemicals. It lends itself to both biological and thermal conversion processes and both options are currently being explored. Hydrogen can be produced in a variety of ways. The majority of the hydrogen produced in this country is produced through natural gas reforming and is used as chemical feedstock in refinery operations. In this report we will examine the production of hydrogen by gasification of biomass. Biomass is defined as organic matter that is available on a renewable basis through natural processes or as a by-product of processes that use renewable resources. The majority of biomass is used in combustion processes, in mills that use the renewable resources, to produce electricity for end-use product generation. This report will explore the use of hydrogen as a fuel derived from gasification of three candidate biomass feedstocks: bagasse, switchgrass, and a nutshell mix that consists of 40% almond nutshell, 40% almond prunings, and 20% walnut shell.

In this report, an assessment of the technical and economic potential of producing hydrogen from biomass gasification is analyzed. The resource base was assessed to determine a process scale from feedstock costs and availability. Solids handling systems were researched. A GTI proprietary gasifier model was used in combination with a Hysys® design and simulation program to determine the amount of hydrogen that can be produced from each candidate biomass feed. Cost estimations were developed and government programs and incentives were analyzed. Finally, the barriers to the production and commercialization of hydrogen from biomass were determined. The end-use of the hydrogen produced from this system is small PEM fuel cells for automobiles.

Pyrolysis of biomass was also considered. Pyrolysis is a reaction in which biomass or coal is partially vaporized by heating. Gasification is a more general term, and includes heating as well as the injection of other "ingredients" such as oxygen and water. Pyrolysis alone is a useful first step in creating vapors from coal or biomass that can then be processed in subsequent steps to make liquid fuels. Such products are not the objective of this project. Therefore pyrolysis was not included in the process design or in the economic analysis.

High-pressure, fluidized bed gasification is best known to GTI through 30 years of experience. Entrained flow, in contrast to fluidized bed, is a gasification technology applied at much larger unit sizes than employed here. Coal gasification and residual oil gasifiers in refineries are the places where such designs have found application, at sizes on the order of 5 to 10 times larger than what has been determined for this study. Atmospheric pressure gasification is also not discussed. Atmospheric gasification has been the choice of all power system pilot plants built for biomass to date, except for the Varnamo plant in Sweden, which used the Ahlstrom (now Foster Wheeler) pressurized gasifier. However, for fuel production, the disadvantage of the large volumetric flows at low pressure leads to the pressurized gasifier being more economical.

2 Biomass Resource Assessment

The improvement in efficiency, its reduced environmental impact, and the capacity to generate hydrogen from renewable resources combine to make hydrogen an attractive choice for future energy development. Among the renewable resources, biomass offers several attractive attributes as a primary feedstock for hydrogen production. Biomass is currently used as a fuel for heat or electricity in most parts of the world, at a wide range of scales. Biomass' most attractive applications are those where supply and collection systems have been established to provide raw material for a primary product (i.e. food or fiber) and power production has played a secondary role. These situations often provide large quantities of fiber material at attractive prices and producing renewable hydrogen from this type of resource would be a logical first choice. Under scenarios of a favorable regulatory environment or reduced availability of fossil resources, systems dedicated to the production of biomass to supply hydrogen from production facilities are also likely.

Hydrogen production from a typical biomass material has a theoretical yield of 16.5% on a mass basis when steam is used as the oxidizer in a simplified, two-reaction mechanism [1]. At this theoretical yield, the energy content of 165 g hydrogen is roughly equal to that of the initial kilogram of biomass feedstock.

A key element in planning a biomass to hydrogen facility is to locate a plant that will have ready access to adequate feedstock supplies. Three potential feedstocks identified for hydrogen production are (1) sugarcane bagasse, the fibrous by-product of sugar or ethanol production, (2) nut shells, and (3) switchgrass, a perennial forage crop under development as a dedicated bio-fuel. Sugarcane is grown on most landmasses that lie in the geographic region bounded by 30° N. and 30° S. latitude. Nut crops are more widely distributed, with varieties grown in temperate climates at greater distances from the equator. Switchgrass also grows in temperate climates. To assess the potential for hydrogen production from these three biomass resources, the Hawaii Natural Energy Institute conducted a survey and compiled the latest information on their availability in the United States and major sugar and nut producing countries. Types of data included in the survey for nut shells and sugar cane bagasse included total production by country, geographic location of production areas, sizes of sugar and nut processing facilities, distribution of factories within the major production areas, properties of each material relevant to use as fuel, and temporal production of residues. This information is presented in the following sections. Based on this information, sizes for initial design calculations for hydrogen production facilities have been proposed. A more detailed analysis of the resource base is available in Appendix A.

2.1 Feedstock Cost and Availability

Sugarcane fiber in the PRC, India, Brazil and the U.S., almond and walnut shells in California, and switchgrass in the U.S., were considered as possible feedstock supplies for hydrogen production facilities. Information regarding the sizes and geographic locations of processing facilities and feedstock costs were determined for each of the potential feedstocks. Based on available information, possible sizes of hydrogen processing facilities were proposed for each of the feedstocks, although the optimal facility size will ultimately be determined by the total production cost for hydrogen.

Average size sugar factories in the PRC, India, Louisiana, Florida, and the Brazilian states of Alagoas and Sao Paulo were determined to be 2000, 2300, 8540, 18140, 7050, and 10400 tonnes cane per day, respectively. Assuming that 85% of the fiber generated at the sugar factory was required to satisfy its own internal power demand and knowing the average number of operating hours per year, annual excess bagasse available from each facility size was determined. Assuming that a hydrogen production facility would operate for 330 days per year, the daily supply of excess bagasse was determined assuming that excess bagasse generated by the sugar factory could be stored for levelized distribution throughout the year. Under this strategy, the largest average facility (Florida) could supply 136 tonnes of feedstock per day.

Consolidating excess bagasse from neighboring facilities could be expected to increase the available feedstock supply from 136 to 680 tonnes per day at the average Florida facility. Feedstock consolidated from smaller factories typical of India and China could be expected to support a facility of 100 tonnes per day. Fiber consolidation of excess bagasse in Louisiana, Alagoas, Sao Pauolo, and Florida would provide feedstock supplies of approximately 150, 500, and 700 tonnes per day, respectively. The delivered cost of excess bagasse fiber in India was reported to be around $29 per tonne with about one-third of the total cost due to transportation fees. Excess bagasse fiber in Hawaii has been sold, delivered to the purchaser, for approximately $32 to 40 per tonne with about half of the price due to transportation costs.

Collection of cane trash fiber was considered as an additional step that could be undertaken to generate larger feedstock supplies. Under the assumption that 85% of the cane trash could be collected from the fields supplying a single factory and combined with the factory's excess bagasse, the available feedstock supply was approximately equal to the supply generated by the strategy of consolidating excess bagasse from several factories. Florida was the only exception, increasing from 680 tonnes per day to 906 tonnes per day.

Combining the strategies of collecting cane trash and consolidating the fiber from several factories yielded the largest possible feedstock availabilities for all locales. Under this scenario, the feedstock available from sugarcane fiber (bagasse and cane trash) in the PRC, India, Sao Paulo, Alagoas, Louisiana, and Florida was 750, 1000, 5200, 3500, 1900, and 5200 tonnes per day, respectively. These quantities of feedstock would be generated in excess of the fiber required by the sugar factories to satisfy internal power requirements.

Nutshells were also evaluated as a possible feedstock for hydrogen production and California's almond and walnut industries have two of the largest nut crops in the world. Their geographic concentration in the central valley of California provides opportunities for consolidating supplies particularly near the town of Modesto. The available combined almond and walnut shell resource in the state totals approximately 200,000 tonnes but the entire amount would not be accessible due to currently established uses for the materials. Prices for almond and walnut shells range from $12 to 27 per tonne and $22 to 44 per tonne, respectively. Almond shells are available in larger supplies than walnuts shells but have relatively high potassium content and would likely cause operating difficulties in fluidized bed gasifier facilities. To ameliorate this problem and increase the size of the hydrogen production facility, clean biomass fuel supplies such as prunings, stumps, and culled trees from almond orchards should be acquired and blended

with the shells. Assumptions outlined for this strategy should be verified with more detailed analysis.

Delivered costs of switchgrass from dedicated feedstock supply systems were projected for 11 states in the U.S. and ranged from $27 to 42 per tonne for facility sizes of 100,000 tonnes per year (300 tonnes per day). These cost figures were for the first facility in each of the states that were located to have access to the lowest cost feedstock. Subsequent plants would face incrementally higher feedstock costs. Similar analysis for facilities of 635,000 tonnes per year (1900 tonnes per day) projected costs of $30 to 46 per tonne. Based on these analyses, the feedstock prices appear to vary linearly between the two facility scales. Since switchgrass would be supplied as a dedicated feedstock for a hydrogen production facility the scale of the factory can be readily chosen based on a scale that produces the minimum-cost hydrogen.

2.2 Process Scale Determination

Based on the assembled information on feedstock availability from sugarcane fiber, nutshells, and switchgrass, initial scales for hydrogen production facilities can be selected for design calculations. For sugar cane fiber, initial design calculations should be done at the 500, 1000, 2000, and 4000 tonnes per day scales. For nutshells, initial design calculations should be conducted at a scale of 500 tonnes per day with a fuel mix consisting of 20% walnut shell, 40% almond shell, and 40% clean wood fuel. For switchgrass, initial design calculations should be performed using scales of 500, 1000, and 2000 tonnes per day. A summary of the biomass resource assessment is given in Table 1.

	Feedstock Availability	**Process Scale Size**	**Delivery Costs (Range)**	
Feedstock	**Tonnes / Day**	**Tonnes / Day**	**US $ / Tonne**	**US $ / GJ**
Bagasse	700 - 5200	500, 1000, 2000, 4000	29 - 40	1.63 - 2.25
Switchgrass	N / A	500, 1000, 2000	27 - 46	1.45 - 2.47
Nutshell Mix	500	500	12 - 46	0.61 - 2.32

Table 1 - Summary of Biomass Resource Assessment

3 Hydrogen Production by Gasification

3.1 Summary of Pressurized Biomass Feeding Systems

A number of equipment designs for feeding biomass feedstock to pressurized gasifiers may be applicable to biomass-to-hydrogen processes. All of these feed systems share the common requirement of continually feeding biomass to a pressure vessel. The processes, however, differ in terms of how the solids are processed during feeding, which has significant materials of construction implications. The main issues that are involved in the choice of a pressurized feed system are process pressure, volume, quality of feedstocks, and particle size. A detailed analysis of feed systems is available in Appendix B.

Ideally, a biomass pressure feeder must have the following characteristics:

- Highly reliable
- Low construction, maintenance, and operational costs
- Low power consumption
- Wide applicability to various biomass feeds
- Meters and conveys biomass in a continuous and non-pulsating manner
- Suitable for handling a variety of bulk materials
- Insensitive to variations in fuel quality (bulk density, particle size, moisture content, and flowability)
- Builds sufficient pressure seal against backstroke
- Accurate feed control

In addition, plant size also influences the choice of the feeding system. In general, only a few of these properties can be met, and compromises must be made. Table 2 makes a comparison of some of these properties.

Feeder Type	Specific Power (kW/tonne/day)	Capital Investment Cost Index	Inert Gas Consumption (kg/day)
Rotary Valves	0.016	10 (estimate)	129600 (estimate)
Lock hopper	0.082	100	194400
Plug, Screw-type Feeder	0.82 (Sunds Feeder) 1.64 (Ingersoll-Rand)	105 (estimate)	8295 (estimate)
Plug, Screw/Piston-type Feeder	0.082 (Stake Feeder)	105	8295
Plug, Piston-type Feeder	0.164 (Kone Wood)	120	41470
Fortum Piston Feeder	0.082 (estimate)	120 (estimate)	20740 (estimate)

Table 2 - Operating Variables and Capital Cost for Different type Feeders

Equipment wear from erosion and/or corrosion appears to be universal, to greater or lesser extents, in all existing feeder equipment that may be applicable for biomass feed to gasifiers. This problem is more prevalent in plug feeders due to high power usage and more complex rotating equipment.

Plug feeders are not the best option for feeding biomass to gasifiers. There are deficiencies in their design and in the availability of practical wear-resistant materials of construction, resulting in frequent refurbishing and/or replacement of equipment. The problems of higher wear, as well as high power consumption, will become exacerbated at high-pressure differentials, which is a consideration for gasifiers that require high temperatures and pressures. Finally, the ability of a plug feeder to handle stringy and fluffy feedstocks, such as bagasse and switchgrass, may be dependent upon pre-processing steps, including pelletizing and/or pre-densification that are rather costly.

The Fortum piston feeder, however, has relatively low power consumption and moderate consumption of inert gases. Equipment wear from erosion appears to be much lower than other plug feeders. This is due to a two-stage operation of the plug feed system. The first, a plug formation stage, is developed at relatively low pressure differential, and the second, the plug release to gasifier, conducted at high pressure and temperature for a relatively short period of time. Therefore exposure of the feedstock material to high frictional forces (temperature) and gasifier temperature is minimized, thus reducing the wear and erosion of the cylinder interior. This also eliminates plugging the gasifier inlet due to formation of glue-like material from feedstock pyrolysis. The Fortum feeder deserves further investigation when a feed system is fully designed.

The advantage of a rotary feeder is the low capital cost and energy consumption, but the inert gas consumption is high. Rotary valve feeders, designed for dry feedstocks, are limited to about 10 to 12 bars pressure. If higher pressures are required for the gasifier, this feeder may not be considered unless higher-pressure designs are developed and tested.

Despite the likely higher operating costs (due to high inert gas usage) than other alternative feeders, the lock hopper-based feed system is the preferred choice for all feedstocks. Moreover, lock hoppers have been extensively tested with various biomass fuels and are considered to be a well-proven technology. In contrast, other alternative feed systems have not been fully developed and do not have a proven track record.

If a lock hopper system is employed, a two parallel lock hopper system is recommended to improve the feed systems reliability and durability and to reduce the operating costs. In this system a 25 to 30% less inert gas is consumed compared to the case of only one lock hopper. Moreover, at high feed capacities and pressures, the total number of feed cycles is high, resulting in considerable wear of the sealing components of valves. The double lock hopper design reduces the wear by reducing the number of cycles.

3.2 Gasifier Model and Simulation

The objective of this task is to simulate production of hydrogen from biomass feedstocks by means of gasification. Block diagrams for the systems are depicted in Figures 1 and 2. The first step in this process is to bring the moisture level of the biomass to between 10 and 20 percent. For switchgrass and nutshells, this is not a problem due to the moisture content of these feedstocks as received. Bagasse, however, has a moisture content around 50% and will have to be dried to obtain the proper gasification conditions.

Other than the drying equipment, the three feedstock's systems are very similar. The biomass is brought from the stockpile, or dryer, to the gasifier via the solids handling equipment that was previously discussed. The solids handling equipment delivers biomass to the gasifier through the feeding system. The gasifier is fed with steam and oxygen to produce a hot syngas. The syngas is taken though a hot gas cleanup section to remove hydrogen sulfide to 100 ppmv (requirement of the reformer). The syngas is then sent through a reformer where the hydrocarbons are converted to hydrogen and carbon monoxide. Make-up water is added for the switchgrass and nutshell mix designs to drive the shift reaction. The temperature of the reformer exit is then reduced by a heat exchanger that supplies steam to the gasifier and reduces the inlet temperature to the shift reactor. The shift reactor uses water to convert carbon monoxide to hydrogen and carbon dioxide. The resulting gas is then compressed and fed into a pressure swing adsorption (PSA) reactor. The PSA unit purifies the hydrogen above 99.9% with a hydrogen recovery of 80%. The by-product gas is taken to a combustor and burned to produce heat for the reformer, for the case of switchgrass and nutshells. For the bagasse case, the heat from the flue gas can be used to supply heat to the reformer with the excess being used, in combination with the heat that is recovered from the reformer stream after the heat exchanger, to supply heat to dry the bagasse.

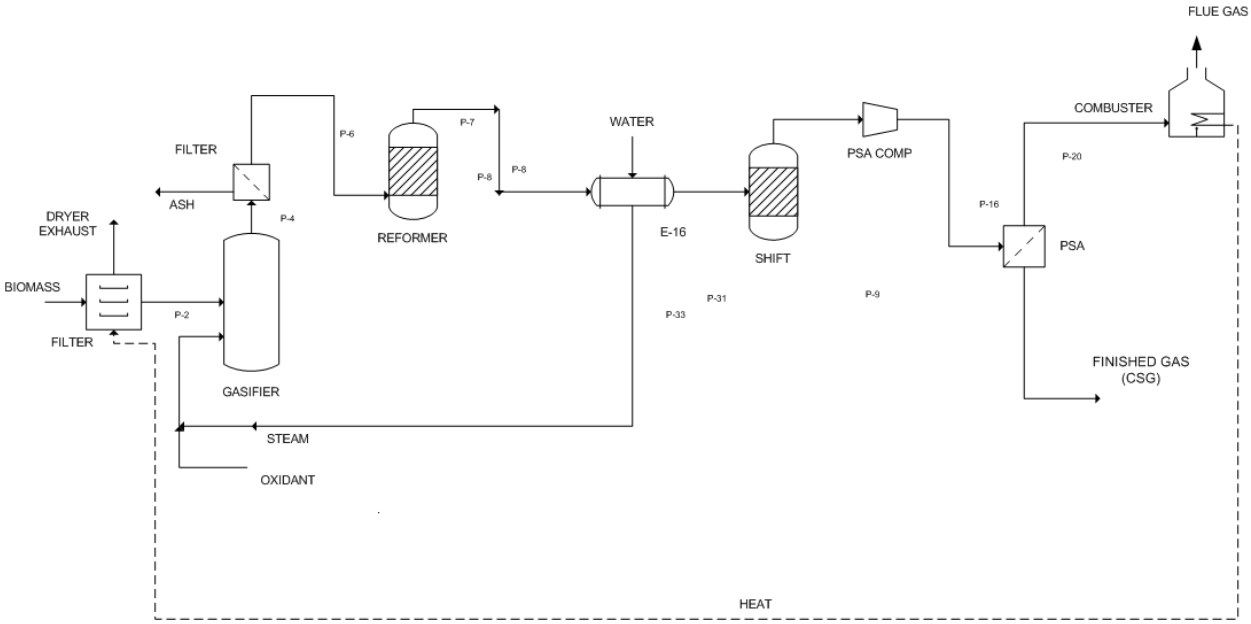

Figure 1 - Block Flow Diagram for Bagasse Feedstock

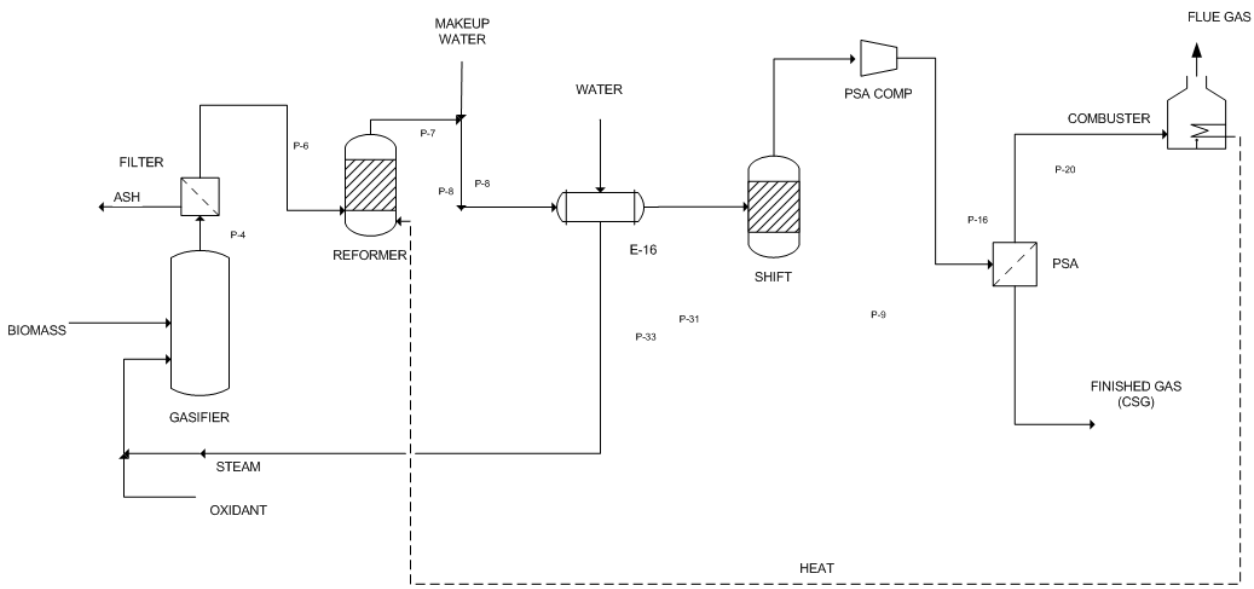

Figure 2 - Block Flow Diagram for Switchgrass and Nutshell Mix Feedstocks

3.2.1 Approach and Assumptions

The process flow designs for the three cases were developed using a GTI proprietary gasifier model and the Hysys® process design and simulation program. The gasifier model utilizes GTI's data bank that has been assembled for a large number of feeds and operating experiences, from small-scale process development units to demonstration plants. The model predicts mass and energy balances, including syngas compositions, ash, and oil/tar outputs, based on measured feedstock properties. The inputs required include feedstock rate, operating temperature and pressure, steam rate and conditions, and oxidant composition. The calculated gasifier effluents for all the cases had small amounts of C_6^+ components. These were combined and represented as benzene for the feed to the subsequent reforming process. The results from the gasifier simulation were used as inputs for the remainder of the process flow design, which was executed using the Hysys® process simulation program. Throughout the design, the Peng-Robinson equation of state was used for calculations.

Past experiences have shown that the feed to the gasifier should contain 10 to 20 percent moisture for good operation. Two of the candidate feeds, switchgrass and mixed nutshells, meet this criterion as received. However, the typical bagasse feed contains approximately 50 percent moisture. This required the incorporation of a feed dryer into the process.

All the designs utilize a reformer and shift reactor. The product gases from these were calculated using a 10 °F approach to equilibrium. This is consistent with the commercial design practice for these two reactors. It is assumed that all C_6^+ components were converted to CO_2 and hydrogen in the reformer. The objective for this section was to obtain a gas containing between 2000 and 3000 ppmv CO in the shift reactor effluent. This objective was selected as a reasonable goal for the reformer / shift section and is typical of commercial operation.

The hot gas cleanup system must remove hydrogen sulfide to 100 ppmv prior to entering the gasifier. There are commercially available sorbents that will remove H_2S, such as zinc titanate and zinc oxide. Chlorine components were not considered for this study.

The hydrogen recovery and purity from the PSA unit were chosen on the basis of literature data for similar systems. Eighty percent (mole basis) of the hydrogen was recovered and better than 99.9% hydrogen purity was obtained. An economic analysis of the trade-off between hydrogen purity, recovery, and process conditions was not made. The hydrogen recovered from the PSA unit can be used in a PEM fuel cell.

All of the heat exchanger designs in the process flow utilize the Gas Processing Supplier Association (GPSA) and Tubular Exchanger Manufacturers Association (TEMA) design criteria to establish the exit temperatures. An efficiency of 75% was used for the compressors in the system.

3.2.2 Simulation Results

Analysis of the resource base determined bagasse and switchgrass should be analyzed on a scale of 500, 1000, and 2000 tonnes/day and mixed nutshells at 500 tonnes/day. It was also determined that bagasse should be analyzed on a scale of 4000 tonne/day. The economics of building a gasifier to that scale would result in high capital costs for equipment and therefore was not analyzed. Two, 2000 tonne/day gasification plants should be used for this scale. Simulation results were obtained for 500 tonnes/day biomass fed to the gasifier at moisture contents of 20% for bagasse, 12% for switchgrass, and 12.5% for the nutshell mix. A scaling factor of 1 can be used to determine hydrogen production from an increased feed rate (i.e. doubling the feed rate will double the amount of hydrogen produced). The proximate and ultimate analyses are given for all three feedstocks in Table 3.

Ultimate Analysis	Bagasse	Switchgrass	Nutshell Mix
C	46.46	47.73	48.51
H	5.4	5.56	5.65
N	0.18	0.67	0.77
S	0.06	0.12	0.01
Ash	8.5	5.24	3.07
O (by difference)	39.36	40.57	41.98
Cl	0.04	0.11	0.01

Proximate Analysis	Bagasse	Switchgrass	Nutshell Mix
Ash	6.99	5.24	2.38
Volatile	80.06	80.09	76.28
Fixed C	12.95	14.67	21.34
HHV (MJ/kg)	17.77	18.62	19.80

Table 3 – Proximate and Ultimate Analyses of Feedstocks

Feedstock		Gasifier	Reformer	Shift	PSA-Product	PSA-Reject
Bagasse	Temp [°C]	871	816	232	93	93
	Pressure [kPa]	793	690	552	414	414
	Flow [kmole/h]	1289	1536	1536	650	886
	H_2 [mole fraction]	0.1684	0.3360	0.5288	1	0.1833
	CO [mole fraction]	0.1176	0.2199	0.0271	0	0.0471
	CO_2 [mole fraction]	0.2463	0.1727	0.3655	0	0.6336
	H_2O [mole fraction]	0.3649	0.2529	0.0601	0	0.1041
	CH_4 [mole fraction]	0.0798	0.0085	0.0085	0	0.0148
Switchgrass	Temp [°C]	871	816	232	93	93
	Pressure [kPa]	793	690	552	414	414
	Flow [kmole/h]	1349	1602	1806	770	1036
	H_2 [mole fraction]	0.2043	0.3539	0.5330	1	0.1859
	CO [mole fraction]	0.1779	0.2775	0.0270	0	0.0471
	CO_2 [mole fraction]	0.2303	0.1523	0.3542	0	0.6175
	H_2O [mole fraction]	0.2736	0.1861	0.0590	0	0.1028
	CH_4 [mole fraction]	0.0862	0.0171	0.0151	0	0.0264
Nutshell Mix	Temp [°C]	871	816	232	93	93
	Pressure [kPa]	793	690	552	414	414
	Flow [kmole/h]	1364	1606	1860	805	1055
	H_2 [mole fraction]	0.2287	0.3673	0.5408	1	0.1907
	CO [mole fraction]	0.1982	0.2900	0.0267	0	0.0471
	CO_2 [mole fraction]	0.2097	0.1393	0.3440	0	0.6063
	H_2O [mole fraction]	0.2504	0.1690	0.0588	0	0.1036
	CH_4 [mole fraction]	0.0861	0.0220	0.0190	0	0.0334

Table 4 - Equipment Outlet Stream Information (Basis: 500 tonnes/day fed biomass)

The simulation results from the Hysys® model are summarized in Table 4 for all three feedstocks. The flow rate of oxygen gas to the gasifier is operated at O_2/carbon molar ratio of 0.3 and steam at H_2O/carbon molar ratio of 0.4. The gas streams leaving the gasifier, steam reformer, water-gas-shift section, and the PSA unit are listed in Table 4 for the temperature, pressure, flow, and compositions of H_2, CO, CO_2, CH_4, and H_2O. About 8% methane is produced in the gasifier; after the reformer, almost all of the methane is reformed by steam, which produces additional hydrogen. For the case of bagasse, the gas stream leaving the reformer contains about 25% water, which is sufficient to shift CO to CO_2 and H_2 in the shift reactor. Additional water is added for the water gas shift reaction for the switchgrass and nutshell mix cases because there is not enough water to shift the CO. After the shift reactor, the

streams generally contain about 50% H_2 with a balance of mostly CO_2. Greater than 99.9% of the hydrogen can be separated from this stream by the PSA unit, which is assumed to have a hydrogen recovery of 80%. The PSA-reject streams still contain about 20% hydrogen and some CO and CH_4, which can be combusted as a fuel to generate steam or to provide the heat for the reformer. Additional heat is also recovered from the effluent stream, after the reformer, when the gas temperature is lowered to 230°C for the shift reaction. Part of this heat is used to generate the steam needed for the gasifier.

The overall efficiencies of the process are shown in Table 5. The cold efficiency and the effective thermal efficiency are defined as follows:

$$\textbf{Cold Efficiency} = \frac{\text{Hydrogen Heating Value in the Product (HHV)}}{\text{Biomass Heating Value in the Feed (HHV)}}$$

$$\textbf{Effective Thermal Efficiency} = \frac{\text{Hydrogen Heating Value in Product (HHV) + Net Heat from System}}{\text{Biomass Heating Value in Feed (HHV) + (Electricity Use / 0.35)}}$$

The cold efficiency is an indication of how much hydrogen is generated per unit mass of feedstock with heating values for different biomass taken into account. A net heat is generated from the processes for all three feedstocks.

Net Heat from the System = Heat Recovered from Reformer Effluent + Heat Recovered from PSA Reject – Heat Used in Reformer – Heat Used in Biomass Dryer.

The heat recovered from the reformer effluent stream refers to the high quality heat recovered before the gas stream enters the shift reactor, which operates at 230°C. The heat available after the shift reactor, which is considered a low quality heat, is not considered for the calculation of the effective thermal efficiency.

The electrical power required for the system comes mainly from the air separation plant and the PSA compressor. Other electrical powers consumed in the process, such as a water pump and other auxiliary equipment, are not included in the effective thermal efficiency calculation. The power consumption for the air separation plant is assumed to be 0.4 kWh/Nm^3 O_2. A 35% electric production efficiency is assumed to convert the electricity use to an equivalent heating value for the biomass fuel.

	Bagasse	Switchgrass	Nutshell Mix
Heat Used in Reformer [GJ/h]	24.8	25.7	24.2
Heat Used in Dryer [GJ/h]	45.8	0	0
Heat Recovered from PSA Reject [GJ/h]	60.0	80.5	89.0
Heat Recovered from Reformer Stream [GJ/h]	19.1	8.1	5.3
Net Heat from the system [GJ/h]	8.5	62.9	70.1
Power Used in PSA Compressor [GJ/h]	6.97	8.20	8.45
Power Used for Air Separation [GJ/h]	5.90	5.10	4.10
H_2 Product Heating Value [GJ/h]	186	220	230
Dry Biomass Feed Heating Value [GJ/h]	297	342	361
Cold Efficiency	0.628	0.644	0.637
Effective Thermal Efficiency	0.583	0.744	0.756
H_2 / Dry Biomass [g/kg]	78.1	84.1	88.3

Table 5 - Performance Summary

There is no significant difference in terms of cold efficiency for the biomass feedstocks. Although the hydrogen production rate per unit mass is the lowest for bagasse, its cold efficiency is still comparable to the other two biomass due to the low heating value of the bagasse. However, the effective thermal efficiency for the bagasse case is the lowest because a dryer is needed to remove excess moisture, which consumes about 45.8 GJ/h of energy. The heat recovered from the PSA-reject stream is also lower for the bagasse as its flow rate is lower, as shown in Table 4. On the other hand, switchgrass and nutshell mix have lower heat recovered from the effluent stream of the reformer because additional water is added to that stream for the requirement of the down stream shift reaction.

	Bagasse	Switchgrass	Nutshell Mix
Total H Atom In [kmole/h]	1875	2280	2405
Dry Biomass	900	1017	1022
Water in Biomass	461	275	288
Steam	514	988	1095
Total H Atom Out [kmole/h]	1875	2280	2405
H_2 Product	1303	1543	1610
PSA Reject (H_2 Only)	326	386	404
PSA Reject (CH_4, NH_3, H_2O, H_2S)	246	351	391

Table 6 - Hydrogen Atomic Balance for Biomass Feedstocks

The calculated hydrogen cold gas efficiency is very close to the number reported by Princeton University [2] in a previous study, which reported a 0.62 efficiency for a hydrogen production process from biomass using GTI's fluidized bed gasifier. However, the hydrogen production

rates in Table 5 are generally higher than a recent study by NREL [3], which showed hydrogen production rates of about 73 g H_2 / kg dry biomass.

The hydrogen atomic balance for the process is listed in Table 6 (Hysys® flow diagrams and streams are available in Appendices D, E, and F). In addition to the bound hydrogen in the biomass, a significant amount of hydrogen (around 50%) actually comes from the additional steam or water fed to the system. Approximately 85% of the total hydrogen has been converted to hydrogen gas with the rest being in the form of water and methane. The hydrogen leaving the system is mainly in the hydrogen product stream with some lost in the PSA reject stream.

3.3 Gas Purification and Clean Up

The raw fuel gas from the gasifier requires cleaning prior to any subsequent catalytic treatment processes, such as the reforming and shift reactors shown, and ultimately to meet the requirements of the end-use (i.e., PEM fuel cells). This requires removal of particulates (fly ash), reduced sulfur compounds (H_2S, COS, etc.), halides (HCl, HBr, etc.), ammonia (NH_3), and alkali metals. Moreover, because the targeted end-use for the product hydrogen is sensitive to carbon monoxide (CO), the cleaned hydrogen product gas should also be purified of CO to the extent required.

The raw gasifier fuel gas is cleaned of particulates, to prevent obstruction of flow channels, by passing it through a hot gas filter using ceramic candle filter elements, which can sustain very high temperatures. Fly ash accumulates on the candles and is periodically removed by inert gas back-flushing to maintain adequate pressure drop across the filter. Potential, suitable hot gas filters include ceramic filters that are offered commercially by Siemens Westinghouse for various applications, including PFBC, IGCC, and biomass gasification. These ceramic filters have undergone extensive sub-commercial as well as full-scale testing, under a wide range of operating conditions, including pressure, temperature, gas flow rate, and dust loading. Operating temperatures as high as 1900°F have been reported [4,5].

The gasifier product gas must also be treated to remove gaseous contaminants that may be detrimental to downstream gas processing units and end-use. The fuel gas purity requirements of the reformer as well as the end-use application (i.e., PEM fuel cell) are summarized in Table 7.

Gaseous Contaminant	Reformer	PEM Fuel Cell
H_2S	< 100 ppmv	H_2S < 1 ppmv (estimations vary from 10 to 100 ppbv, around 50 ppbv)
NH_3	-	NH_3 < 1 ppmv
HCl	-	Not a problem due to acidic nature of membrane materials
CO	-	CO < 10 ppmv

Table 7 - Reformer and End-Use Specifications

Gas cleaning technology for removal of sulfur and chlorine from fuel gases is commercially available, using regenerable and non-regenerable sorbents. For sulfur removal, candidate

regenerable sorbents include zinc titanate, which has undergone significant development work within the context of the Integrated Gasification Combined Cycle (IGCC) for coal-based gasification systems, and other sorbents such as those based on the oxides of copper (CuO), iron (Fe_2O_3), and manganese (Mn_2O_3). Non-regenerable or disposable sulfur sorbents include the standard zinc oxide (ZnO) guard-bed and the Sulfatreat iron oxide sorbent. Both of these materials are commercially available and are widely used for low- to medium-temperature desulfurization applications (up to 750°F for the zinc oxide sorbent and up to 500°F for the iron oxide sorbent). Chlorine removal, which is also commercially available, can be accomplished using non-regenerable materials, such as sodium-promoted alumina or other sodium-containing sorbents.

To make an assessment regarding hot gas cleaning options specific to the process of producing hydrogen via gasification of the three candidate biomass materials, the process flow diagram was examined in detail. A summary is provided in Table 8 of chemical contaminant concentrations and temperatures at several inlet/outlet points along the biomass gasification PFD for H_2 production. At each point, temperature and the concentrations of the two gaseous contaminants identified, H_2S and NH_3, are given. The summary provided in Table 8 indicates the compositions shown have been overly simplified, since only two chemical contaminants, H_2S (30 to 400 ppmv) and NH_3 (1700 to 7400 ppmv), are shown. Alkali metals, characteristically found at relatively high concentrations in biogasification systems, are not taken into consideration. In addition, although the ultimate analyses of the three selected biomass materials indicate the presence of chlorine, no chlorine compounds have been considered in the gasifier product gas.

	Bagasse (ppmv)			**Switchgrass (ppmv)**			**Almond Mix (ppmv)**		
Location	H_2S	NH_3	T, °C	H_2S	NH_3	T, °C	H_2S	NH_3	T, °C
Gasifier Outlet	200	1700	871	400	6500	871	30	7400	871
Reformer Inlet	200	1700	871	400	6500	871	30	7400	871
Reformer Outlet	168	1400	816	337	5500	816	26	6200	816
Shift Inlet	167	1400	232	299	4900	232	22	5400	232
Shift Outlet	167	1400	232	299	4900	232	22	5400	232

Table 8 - Summary of Contaminant Concentrations and Temperatures at Various Locations

For the cases of bagasse and switchgrass, the H_2S concentration in the resulting gasifier product gases exceeds 100 ppmv, the tolerance limit of the reformer. Therefore, to protect the reformer against degradation and catalyst poisoning, desulfurization of the gasifier gas should be carried out upstream of this unit. One approach is to rely on sorbent injection in the gasifier product gas immediately upstream of the hot gas filter. Given the relatively low concentration of H_2S in all cases, such approach would be attractive economically since inexpensive single-use or once-through sorbents can be employed. Unfortunately, at the very high gasifier gas temperature of 871°C (1600°F), no material is known with the desulfurization efficiency required. Also, even if such material existed, it remains unknown whether the ash in the gas would interfere with its desulfurization capability.

Another approach is to use developing desulfurization technologies that rely on the use of a regenerable metal-oxide-based sorbent material, such as zinc titanate, as a polishing sorbent. In this case, it will be necessary to cool the gasifier product gas, following the hot gas filter, to a temperature in the range of 482 to 593°C (900 to 1100°F). Such an approach would rely on the use of common desulfurization reactor configurations, such as a packed-bed. This desulfurization step, although it will reduce the sulfur concentration well below the tolerance limit of the reformer (i.e., < 100 ppmv), it will not reduce the H_2S concentration to meet the more stringent requirement of the intended PEM fuel cell end-use (i.e., < 50 ppbv), even if the most efficient reactor configuration (i.e., packed-bed) were used. Accordingly, it will be necessary to incorporate an additional ultra-desulfurization step downstream of the reformer, at a location where the temperature is high enough to ensure high utilization of the ZnO guard-bed material.

Given the relatively low H_2S concentrations in the gasifier product gases, it may not be economical to use regenerable sorbents, as bulk or polishing sorbents, upstream of the reformer. It is likely to be more economical to utilize a ZnO guard-bed material, such BASF's R5-12 or Sud Chemie's G-72E. In a recent DOE/NETL-funded project [6] GTI has demonstrated that the G-72E sorbent was capable of removing H_2S from simulated fuel gas mixtures to less than 85 ppbv at 300°C (572°F), which was the detection limit of the detection method developed.

For both the bagasse and switchgrass cases, the gasifier product gas can be cooled down to 343 to 400°C (650 to 750°F), for potential desulfurization to less than the target ppbv level, thereby meeting in one step the end-use requirement of the PEM Fuel Cell. Following desulfurization, the gas will then be reheated to the required inlet temperature of the reformer. It should be noted that cooling of the gasifier gas for the guard-bed material desulfurization step will also accomplish the removal of alkali metals through interaction with cool surfaces, and possibly by adsorption on particulate matter. This is an additional advantage of relying on a ZnO guard-bed to remove sulfur to meet the reformer tolerance limit as well as the end-use requirements in a single reaction vessel.

For the case of the Almond mix, the product gasifier gas contains only about 30 ppmv H_2S, and could therefore be sent directly to the reformer following removal of fly ash in the hot gas filter. To avoid additional costs associated with gas cooling and subsequent reheating, the sulfur guard-bed, in this case, should be placed downstream of the reformer at a temperature low enough to ensure desulfurization of the fuel gas to sub-ppmv levels, as required by the PEM fuel cell.

For all three cases, ammonia would not constitute a problem, since it is likely that it would be reformed to hydrogen and nitrogen in the reformer to below the stringent requirement of the PEM fuel cell (i.e., < 1 ppmv). Similarly, the carbon monoxide level in the product hydrogen stream from the PSA unit may be < 10 ppmv, and no additional CO removal would be necessary.

In addition to the required hot gas cleaning outlined above, carbon dioxide (CO_2) in the gas may also be removed (separated) for eventual sequestration by utilizing one of the commercial liquid absorption processes that employ either a chemical or physical solvent. The most likely process will employ a regenerable chemical solvent such as an amine or hot potassium carbonate. The choice will be dependent on the pressure level of the overall process scheme.

4 Economics of Hydrogen Production

4.1 Methodology

The flow streams and sizes from the process flow scheme were used to adjust the scale and unit operations that had previously been the subject of cost and design studies by EPRI and GTI. Previous work done for GTI had provided a very detailed breakdown of capital costs, including labor hours on many categories of construction and installation. The work done by EPRI developed cost breakdowns for biomass power systems using biomass feedstocks. Other less detailed capital and operation costs for hydrogen production from natural gas and by electrolysis of water were also evaluated.

The detailed cost breakdown done for GTI covered biomass handling, drying, gasification and gas cleanup. The size of the system was the equivalent of 15 MWe, if a power system with a gas turbine combined cycle at 9.5 GJ/MWh were added to the system. The study was done in 1987 and EPRI applied a 1.38 factor to convert 1987$ to 2002$. (The 1.38 reflects about 1.55 in inflation adjustment, corrected by a productivity adjustment of somewhat less than 1% per year.)

In order to make comparisons with power plant studies, the combined cycle power system components were added to the GTI evaluated plant capital costs. To develop the hydrogen production costs needed in this study, the costs of the additional equipment were then added to the cost estimate for the GTI solid-to-clean-gas system. The added steps for hydrogen production are those described in the design section above. These steps are steam methane reforming (SMR), shift, and purification by PSA. The previous results for EPRI (EPRI-owned, developed by EPRI contractors and/or staff) were used to verify estimates made for the added costs of the reforming, shift, and separation steps.

The product of the above cost estimation was a $/GJ value and a capital cost breakdown for a plant whose product is hydrogen at a rather low pressure of 60 psig (414 kPa). This is low-pressure compared to the pressure needed to store, pipeline, and distribute hydrogen to fuel cell vehicles. The EPRI-owned results were used to interpret the cost estimate (no compression to high pressure, no storage, and no distribution/delivery system).

Scaling of costs to adjust to the sizes desired for the cases studied here was accomplished according to the following general rule: power law scaling of 0.7 for the solids handling, gasification, gas cleaning, shifting, and purification systems, and 0.8 for the power, steam, balance of plant, general facilities, and overall combined cycle system scaling. Drying and steam turbine components were scaled at a 0.6 power law.

Table 9 shows how the costs for the small gasification/cleaning pilot plant scales to larger sizes. It also compares with the goals for commercial biomass gasification (IGCC) power plants at 100-MWe size. The natural gas combined cycle (NGCC) portion of Table 9 shows that the power part of the systems being addressed is taken to be at costs that are comparable with the current cost estimates. Capital costs in the $400 to $450/kW range are shown for large NGCC power plants. Table 9 also shows how the design and cost goals for biomass gasification scale to meet a $889/kW goal for a 100-MWe biomass IGCC, and the $469/kW for the NGCC at very large sizes.

Table 9 - Biomass Gasification Combined Cycle

Description	Cost Goals (Future)			Costs Today (2002)		
Gasification-only Pilot Plant:	$M	Size (MW)	$/kW	$M	Size (MW)	$/kW
15-MWe size equivalent	8.6	14.73	577	18.4	14.73	1249
Power law for scaling	0.7			0.7		
42-MWe size equivalent	17.9	42	426	38.3	42	912
50-MWe size equivalent	20.2	50	405	43.3	50	866
100-MWe size equivalent	32.9	100	329	70.3	100	703
Complete IGCC Power Plant:						
15-MWe size	19.2	14.73	1303	30.3	14.73	2057
Power law for scaling	0.8			0.8		
42-MWe	44.4	42	1057	70.1	42	1668
50-MWe	51.0	50	1021	80.5	50	1611
100-MWe	88.9	100	889	140.2	100	1402
Natural Gas Combined Cycle (NGCC):						
15-MWe size	10.0	14.73	679	12.5	14.73	849
Power law for scaling	0.9			0.9		
42-MWe	25.7	42	611	32.1	42	764
50-MWe	30.0	50	601	37.5	50	751
100-MWe	56.1	100	561	70.1	100	701
400-MWe	195.2	400	488	244.0	400	610
600-MWe	281.2	600	469	351.5	600	586

The base case for this analysis is the 500 tonnes/day bagasse case with a feedstock cost of $1.50 per GJ (approximately $30 per tonne for each biomass feed) with an internal rate of return (IRR) of 15%. Hydrogen production costs were evaluated for sensitivity based on fluctuations of capital cost, feedstock cost, and IRR.

4.2 Sensitivity to Capital Cost

Economic assessments of capital cost are based on evaluations of the process flow scheme to determine the sizes and capacities of equipment. The base case capital cost is $37 million and has been varied plus/minus 30% to show the sensitivity to capital cost fluctuations. Appendix H presents tables of the high and low (± 30%) capital cost cases for each feedstock and its process scale. Tables 10, 11, and 12 summarize these results.

Size in tonnes/day	500	500	500	1000	1000	1000	2000	2000	2000
Capital cost in $M	25.9	37.0	48.1	42.8	61.1	79.4	70.6	100.9	131.2
Internal Rate of Return %	15.0	15.0	15.0	15.0	15.0	15.0	15.0	15.0	15.0
Biomass feedstock cost in $/GJ	1.50	1.50	1.50	1.50	1.50	1.50	1.50	1.50	1.50
Product cost (H2 gas) in $/GJ	7.39	9.13	10.86	6.21	7.64	9.07	5.39	6.57	7.76

Table 10 - Sensitivity to Capital Costs for Bagasse

Size in tonnes/day	500	500	500	1000	1000	1000	2000	2000	2000
Capital cost in $M	25.6	36.5	47.4	42.4	60.6	78.8	70.6	100.9	131.2
Internal Rate of Return %	15.0	15.0	15.0	15.0	15.0	15.0	15.0	15.0	15.0
Biomass feedstock cost in $/GJ	1.50	1.50	1.50	1.50	1.50	1.50	1.50	1.50	1.50
Product cost (H2 gas) in $/GJ	6.50	7.95	9.39	5.53	6.73	7.93	4.86	5.86	6.86

Table 11 - Sensitivity to Capital Costs for Switchgrass

Size in tonnes/day	500	500	500
Capital cost in $M	25.4	36.3	47.2
Internal Rate of Return %	15.0	15.0	15.0
Biomass feedstock cost in $/GJ	1.50	1.50	1.50
Product cost (H2 gas) in $/GJ	6.34	7.72	9.10

Table 12 - Sensitivity to Capital Costs for Nutshell Mix

4.3 Sensitivity to Feedstock Cost and Summary

Biomass energy projects are a success or a failure depending on the costs of the feedstock, or fuel that they can obtain. This generality may be somewhat less true for biomass in a hydrogen fuel project, because so many other costs are involved in a system that eventually delivers high-pressure (over 400 atmospheres) hydrogen gas to a distribution station at some distance from the hydrogen production. To evaluate the sensitivity, the analysis here was done at $1.00, $2.00 and $3.00 per GJ. Appendix I compares the sensitivity of changing feedstock costs. Table 13, 14, and 15 show the results of hydrogen production costs with changing feedstock prices.

Size in tonnes/day	500	500	500	1000	1000	1000	2000	2000	2000
Capital cost in $M	37.0	37.0	37.0	61.1	61.1	61.1	100.9	100.9	100.9
Internal Rate of Return %	15.0	15.0	15.0	15.0	15.0	15.0	15.0	15.0	15.0
Biomass feedstock cost in $/GJ	1.00	2.00	3.00	1.00	2.00	3.00	1.00	2.00	3.00
Product cost (H2 gas) in $/GJ	8.32	9.91	11.51	6.84	8.43	10.02	5.77	7.36	8.95

Table 13 - Sensitivity to Bagasse Feedstock Costs

Size in tonnes/day	500	500	500	1000	1000	1000	2000	2000	2000
Capital cost in $M	36.5	36.5	36.5	60.6	60.6	60.6	100.9	100.9	100.9
Internal Rate of Return %	15.0	15.0	15.0	15.0	15.0	15.0	15.0	15.0	15.0
Biomass feedstock cost in $/GJ	1.00	2.00	3.00	1.00	2.00	3.00	1.00	2.00	3.00
Product cost (H2 gas) in $/GJ	7.16	8.72	10.27	5.95	7.51	9.06	5.08	6.63	8.19

Table 14 - Sensitivity to Switchgrass Feedstock Costs

Size in tonnes/day	500	500	500
Capital cost in $M	36.3	36.3	36.3
Internal Rate of Return %	15.0	15.0	15.0
Biomass feedstock cost in $/GJ	1.00	2.00	3.00
Product cost (H2 gas) in $/GJ	6.93	8.50	10.07

Table 15 - Sensitivity to Nutshell Mix Feedstock Costs

4.4 Sensitivity to Internal Rate of Return (Capital Recovery Factor)

The base case for this analysis is one at the high end of the return on investment rates investigated, 20% annual capital recovery factor (CRF), which is approximated in this analysis as a 15% internal rate of return (IRR). The owner of a plant will have costs to bear, such as taxes, insurance, administration of the investment, and depreciation of the plant, which require more to be returned to the investors than the amount derived in this analysis from a simple annual "capital recovery factor" (CRF). Therefore, this analysis used 20% CRF to approximate 15% IRR, 15% CRF to approximate 10% IRR, and 10% CRF to approximate 5% IRR. To evaluate the potential for commercial, non-public energy businesses to invest in this energy system, the high case of 20% per year simple capital recovery was applied as the base case and evaluated as 15% IRR against 5 and 10% IRR. Appendix J compares the sensitivity of changing internal rates of return for the three feedstocks. These results are summarized in Tables 16, 17, and 18.

Size in tonnes/day	500	500	500	1000	1000	1000	2000	2000	2000
Capital cost in $M	37.0	37.0	37.0	61.1	61.1	61.1	100.9	100.9	100.9
Internal Rate of Return %	5.0	10.0	15.0	5.0	10.0	15.0	5.0	10.0	15.0
Biomass feedstock cost in $/GJ	1.50	1.50	1.50	1.50	1.50	1.50	1.50	1.50	1.50
Product cost (H2 gas) in $/GJ	6.61	7.87	9.13	5.56	6.60	7.64	4.86	5.71	6.57

Table 16 - Sensitivity to IRR for Bagasse

Size in tonnes/day	500	500	500	1000	1000	1000	2000	2000	2000
Capital cost in $M	36.5	36.5	36.5	60.6	60.6	60.6	100.9	100.9	100.9
Internal Rate of Return %	5.0	10.0	15.0	5.0	10.0	15.0	5.0	10.0	15.0
Biomass feedstock cost in $/GJ	1.50	1.50	1.50	1.50	1.50	1.50	1.50	1.50	1.50
Product cost (H2 gas) in $/GJ	5.85	6.90	7.95	4.99	5.86	6.73	4.41	5.14	5.86

Table 17 - Sensitivity to IRR for Switchgrass

Size in tonnes/day	500	500	500
Capital cost in $M	36.3	36.3	36.3
Internal Rate of Return %	5.0	10.0	15.0
Biomass feedstock cost in $/GJ	1.50	1.50	1.50
Product cost (H2 gas) in $/GJ	5.72	6.72	7.72

Table 18 - Sensitivity to IRR for Nutshell Mix

5 Assessment of Public Programs

Government policies that discourage greenhouse gas emissions or encourage biomass production on idle land could make biomass feedstocks more attractive and competitive. Government policies that pay farmers to leave fields idle or that give subsidies for planting specific biomass crops can have large impacts on biomass production, and, hence, on the prospects for biomass gasification purposes of hydrogen production.

The current public programs that address biomass energy development are state programs that name biomass as a renewable to be included among the renewable energy sources to be encouraged, sometimes by "renewable portfolio standards" (RPS) requiring increasing fractions of electric power generation or capacity to be from renewables. Biomass is usually named among these renewables. Some non-governmental organizations, most notably Green-e and the CRS (Consortium for Renewable Solutions), do not easily endorse biomass technologies. Cofiring with coal is especially controversial, as are any policies that are thought to encourage tree harvesting in forests or use waste-derived fuels that are similar to MSW or are thought to contain trace contaminants. Hydrogen from biomass crops and clean food-related wastes should meet most tests and win "green status and state R&D support.

EPRI has developed economics in the previous sections, above. The feedstock costs are influenced by government policies on agricultural support payments and conservation/environment programs. The CRP (Conservation Reserve Program of USDA) program and its related or successor programs can have a $0.50 to $1.50/MBtu effect on the cost of feedstocks produced via energy crops. This would enable a feedstock at the high cost cases done above (i.e., $3.00/GJ) to come down to the base case of $1.50/GJ.

5.1 Implications

Biomass as the source of hydrogen fuel enables hydrogen to be a renewable energy resource. Biomass is not the only such source, because any renewable source of electricity can be made the basis for renewable hydrogen fuel via electrolysis of water to make hydrogen. No electricity to hydrogen technology is likely to be able to make hydrogen at as low an incremental cost as hydrogen fuel produced by off-peak nuclear electrical power.

Biomass has the advantage of being a renewable source that can be stored – as solar energy captured by and stored in plants that capture the energy from sunlight via photosynthesis. Hydrogen can be produced from the stored solar energy in biomass material without the need to make electricity as part of the process. The process studied here, biomass gasification followed by gas processing to concentrate the energy output in a hydrogen gas fuel product, has the advantage of being developable as a result of R&D directed at other end uses as well as hydrogen fuel: biomass electric power, coal electric power, coal-based fuels and chemical products, and other, non-hydrogen, biomass-based fuels and chemical products.

Biomass gasification for hydrogen fuel production should be a subject of continuing R&D in order to seize the opportunity to improve hydrogen production technology via other research and development programs – as suggested above where both biomass and coal technologies are named – and in order to fully assess the biomass option. The cost of this option appears to be

small or modest, relative the bottom line cost of hydrogen delivered to fuel cell vehicles and relative to the other renewable sources. The capital costs of the biomass gasification and gas-cleanup subsystems within the total system is less than $2.00/GJ in a total system that delivers hydrogen to the end user at a cost of $20/GJ. The comparisons are shown below.

In addition to the relative costs just mentioned, and to be detailed below, biomass resource development provides a way to enhance and deploy hydrogen as a clean, renewable, no-carbon fuel while using the land, water and human resources that are already available in agricultural regions of the world.

Finally, as is shown below, biomass gasification for hydrogen production can be taken to through the next steps of testing and development at a rather small incremental cost. For all these reasons, public policies should include the biomass gasification for hydrogen option as among those that receive public R&D investment and market incentives.

5.2 Biomass Gasification Share of Bottom Line Cost of Hydrogen

The components of the $9.15/GJ base case cost of hydrogen from the bagasse-based technology are shown in the next paragraph below include: (1) capital cost of biomass feedstock handling, $1.00/GJ; (2) capital cost of biomass drying, $1.00/GJ; (3) capital cost of gasification and gas cleaning, $1.50/GJ; (4) capital cost of reforming, shifting and separating, $1.50/GJ; (5) operating costs, $1/GJ; (6) maintenance costs, $0.75/GJ; and biomass feedstock cost, $2.40/GJ. Therefore, even at this rather small scale – 500 tonne/day – the biomass gasification technology is responsible for $7/GJ out of the $9/GJ of hydrogen production and $7/GJ out of over $20/GJ in a large total hydrogen production and delivery system. At the large size considered in this study, 2000 tonnes/day, the $7/GJ is cut to about $5/GJ, with about half of the $5/GJ being capital plus O&M and the other half being feedstock cost. The other $15/GJ, or more, is due to parts of the system that will be about the same in cost regardless of the feedstock used and the technology used to make basic modest pressure hydrogen from that feedstock.

The $5/GJ to $7/GJ for a biomass gasification source of hydrogen should be compared to the feedstock part of a natural gas to hydrogen system and to the costs of other new technology options such as coal gasification, nuclear electricity for hydrolysis of water, solar thermal decomposition of water, and wind or solar (or geothermal) electricity for hydrolysis of water. The EPRI-owned confidential study of the several options for hydrogen fuel for fuel cell vehicles can be used to deduce the costs for the two low-cost options: (1) $5/GJ for natural gas reforming (SMR, or "steam methane reforming"), and (2) $9/GJ for electrolysis capital costs with no feedstock cost and no electricity cost. The nuclear case was not investigated in the EPRI-owned study and the $9/GJ here is for small-scale electrolysis at the hydrogen fueling stations. At a large scale at a nuclear plant this $9/GJ could become as low or lower than the natural gas case. In any event, the conclusion is that biomass gasification hydrogen production has the potential to compete economically with fossil, nuclear and other renewable sources that are available or could become available.

5.3 Biomass Gasification: Costs for a Demonstration Plant

The cost to demonstrate biomass gasification for hydrogen production today would be those for a plant on the scale of the 200-tonne/day 15-MWe equivalent plant that was taken as the starting

point in the economic analysis in the previous section. In the previous section, derived goal values for the biomass gasification technology expected to emerge from future R&D and initial commercial development were established. What would be the $46 M biomass IGCC power plant with a 42 MWe net power generation capacity would be constructed today at something closer to $100 M. Similarly, the $37 M biomass gasification hydrogen plant using bagasse feedstock that must be dried from 50% to the 20% moisture before it can be fed to the gasifier, would cost closer to $55 M to build today as a commercial-scale demonstration. Hence, the cost of this as a next step would be equivalent to a hydrogen production demonstration requiring more than the $11.50/GJ cost of hydrogen that was derived in the previous section as the cost for the bagasse case at 500 tonne/day and 30% higher capital cost (based on $1.50/GJ feedstock material and a 20% capital recovery charge, which was adopted as the equivalent of a 15% IRR).

The $37 M goal technology plant in the previous section used state of the art reform/shift/separate processes that contributed $12 M to the $37 M total. A project built today as a demonstraion would have a biomass feed/dry/gasify/clean system that would cost the equivalent of $700/kWe at a 100-MWe scale for a biomass IGCC power plant. At the 0.7 power law used for scaling this part of the system in the previous section, this suggests at $12 M cost for the biomass gasification part of a 170 tonne/day test facility. This $12 M figure agrees with the result given by adjusting the 1987 cost estimate for the gasification pilot plant by the 1.38 factor expected for combined inflation and productivity adjustment. For the part of the system not unique to biomass gasification, namely the $12 M for reform/shift/separate equipment and installation at 500 tonne/day scale, the 0.7 power law scaling gives a $6 M cost for the test system. Therefore, the next step in R&D could be something on the order of a $18 M facility where $12 M is spent on the biomass handling/drying/gasification/cleanup parts and $6M on the hydrogen production section. For a lower cost and smaller size hydrogen test system relevant to using biomass gasification "synthesis gas" for input to hydrogen production, a slipstream of synthesis gas could be processed through a hydrogen system on the order of one third the total gas stream and, therefore, about 1/10 that of the $12 M system in the 37 M total plant of the previous section. Scaling at 0.6 to raise the cost estimated at small size, this 1/10 scale hydrogen production test stream would add about $4 M to what would otherwise be a biomass gasification facility dedicated to only the handling/gasifying/ cleaning parts of the process.

Using this approach, the next step in public/private R&D on biomass gasification for hydrogen production could be a $4 M addition to a project that is funded separately for biomass gasification in general. Those general uses would include: hydrogen production, gas-turbine-based power generation like the biomass IGCC, combined heat and power generation (CHP), methanol production, other liquid fuel production, ammonia production, and production of other fertilizers or chemicals. The basic, general biomass gasification part would cost on the order of $12 M and would in and of itself test and develop biomass-based synthesis gas capable of use in boilers, gas turbines and fuel synthesis downstream. The design would be required of the synthesis gas, but not on actual downstream processing to the end products. The $4 M addition for hydrogen would enable the testing to extend to an un-pressurized hydrogen end product. The $16 M combination would prove, if successful, the biomass hydrogen steps that could come to successfully compete with hydrogen from natural gas and hydrogen from off-peak nuclear power.

6 Barriers to Commercialization

The vision being addressed is that of a centrally located gasification plant processing low-cost biomass resources into hydrogen. Hydrogen produced in this way can be used in a variety of applications: chemical feedstock, fuel gas, or electric power from large, stationary fuel cells or small, local fuel cells. Hydrogen, as a fuel gas, provides an alternative to fossil fuels and can produce an environmentally clean solution to transportation in the future. However, there are still some technical, economic, and psychological challenges that must be overcome before hydrogen can be introduced into the market as a substitute fuel. A detailed analysis of the barriers to commercialization can be found in Appendix G.

The result of this preliminary assessment suggests that the path with the fewest barriers, may be to produce hydrogen from low-cost biomass, transport the hydrogen to the consumer via pipeline as a compressed gas, and use it as a transportation fuel in fuel cell vehicles.

6.1 Technical Barriers

One technical barrier to commercialization of hydrogen as a fuel gas is its low volumetric heating value relative to competing fuels. The tendency for hydrogen to weaken steel is also a handicap in that it requires the use of stainless steel piping for high-pressure lines. These technical barriers make transporting hydrogen a more expensive proposition than transporting its chief competition, natural gas.

Table 19 - Comparison of Fuel Characteristics

	Hydrogen	Natural Gas*	Gasoline*
Higher Heating Value (kJ/g)	142	58	48
Lower Heating Value (kJ/g)	120	52	45
Volumetric Higher Heating Value (MJ/m^3)	12.1	39.3	--
Volumetric Lower Heating Value (MJ/m^3)	10.2	35.4	--
Fuel in a Stoichiometric Air/Fuel Mix (Vol-%)	29.5	9.5	1.76
HHV of 1-m^3 Stoichiometric Air/Fuel (MJ)	3.52	3.5	3.7
Flame Temperature (°K)	2370	2223 (CH_4)	2470
Maximum Flame Speed in Air (m/s)	3.46	0.45 (CH_4)	1.76
Upper Flammability Limit in Air (Vol-%)	75	15 (CH_4)	7.6
Lower Flammability Limit in Air (Vol-%)	4.0	5.3 (CH_4)	1.0
Flame Emissivity (%)	17 to 25	25 to 33	34 to 43
Minimum Ignition Energy in Air (mJ)	0.02	0.29 (CH_4)	0.24
Normal Boiling Point of Liquid (°C)	-259	-161 (CH_4)	40 to 200

* Natural gas and gasoline are complex mixtures of hydrocarbons that vary slightly in composition from location to location. Unless indicated otherwise the values used here are reasonable averages. (CH_4) indicates that the value listed is for pure methane rather than natural gas.

Relative to hydrocarbon fuels such as natural gas, propane, or gasoline vapor, combustion of hydrogen requires the least amount of air to achieve exact stoichiometry. Therefore more fuel can be concentrated in a fixed volume. This is a positive attribute. Under ordinary circumstances when hydrogen is burned in air, a cubic meter of hydrogen/air mixture mixed in exact stoichiometric proportions delivers about the same heat as an equal volume of natural

gas/air or gasoline vapor/air despite hydrogen's low volumetric heat of combustion. Since combustion devices use air/fuel mixtures, heat generated by a unit volume of stoichiometric air/fuel mixture is the most appropriate method of comparing the serviceability of different fuels. In other words, the same volume of air/fuel mixture moves through the combustion apparatus regardless of the fuel you chose. On the basis of heat released during combustion of a fixed volume of air/fuel mixture, hydrogen, natural gas, and gasoline vapor are comparable to one another. Table 19 compares selected technical specifications for hydrogen, natural gas, and gasoline vapor.

6.2 Economic Barriers

One of the most challenging economic barriers will be building a capitally intensive, hydrogen infrastructure. Other economic barriers to producing hydrogen include the relative costs for building a hydrogen pipeline, variable resource costs, and fuel cell vehicle prices. The estimated cost of building a hydrogen pipeline is much higher than building an equivalent natural gas pipeline. It can be estimated that a hydrogen pipeline would cost 40% more and approach $1.4 million / mile.

The nature of biomass being a by-product, or waste product, infers that it is a cheap resource. As demand for hydrogen grows, demand for biomass will grow accordingly. Using the basic principles of supply and demand, the cost of biomass is sure to increase with its demand. Balancing the price of hydrogen from biomass will serve as a challenge as the market for biomass grows.

Using hydrogen as a fuel source can improve fuel efficiency from 15% in internal combustion (IC) engines to 30% in PEM fuel cell vehicles. Unfortunately, the current cost of fuel cell vehicles is much higher than the average consumer can afford. One of the major challenges for fuel cell manufacturers will be to lower the cost of the fuel cell and make it competitive with IC engine automobiles.

6.3 Psychological Barriers

Much has been made of the impact of the Hindenburg conflagration and the Challenger disaster on the national psyche when it comes to the subject of hydrogen safety. Hydrogen advocates have made several attempts to change the public's perception of hydrogen by pointing out that it was the combustible paint used on the skin of the Hindenburg that caused the conflagration and failure of the solid fuel booster rockets, not the hydrogen engines or the storage tanks, that caused the Challenger disaster.

Nevertheless, even in the absence of these two well-known "incidents," the flammability and explosive nature of hydrogen would still be fixed in our psyche. In US schools, the first acquaintance with the nature of hydrogen occurs in elementary or junior high school in the form of a teacher demonstration. Hydrogen is produced by the chemical action of hydrochloric acid on zinc metal and the hydrogen collected in a test tube. The hydrogen is then ignited, with a burning wooden splinter, making a resounding "pop". In high school a more dramatic demonstration may be performed by first electrolyzing water to produce both hydrogen and oxygen in separate arms of an "H" shaped electrochemical cell and then bringing the two gases

together in the same tube and igniting them with an electric spark. Under the right circumstances, the decibel level of the "bang" produced by the hydrogen/oxygen explosion can equal the sound made by a small-caliber pistol. Both demonstrations bring home the message that "hydrogen explodes."

In many cases these two demonstrations may be the only time that a student encounters an exploding gas through out his 12 years of public education. This has the unintended consequence of leaving them with the impression that hydrogen is more dangerous than the other combustible gases they encounters in daily life, natural gas and propane. This impression is reinforced by characterizing hydrogen as "rocket fuel" used by the space shuttle and as the material from which hydrogen bombs are made.

One of the challenges that must be overcome is the public's perception of hydrogen. One role that government could play in overcoming this psychological barrier is to develop a series of tested demonstrations for junior high school science teachers to use in the classroom that compares the physical properties and flammability characteristics of hydrogen, natural gas, and propane. It is well within the capabilities of a junior high school student to understand the concepts of heating value, flammability limits, flame temperature, and flame speed. Such concepts can be taught as part of a science program or a fire safety program.

7 Conclusion

Hydrogen is a valuable fuel that can provide sustainable energy for fuel cell vehicles. The majority of hydrogen is produced by steam methane reforming of natural gas where average prices of $5.50 to $7.50 per gigajoule can be realized for larger facilities. This is the least expensive way to produce hydrogen [7], but it relies on a non-renewable, fossil fuel.

Biomass gasification represents an alternative means to produce hydrogen. This study evaluated hydrogen production by gasification of three biomass feedstocks: bagasse, switchgrass, and a nutshell mix. The process scheme involved feeding, gasifying, cleaning, reforming, shifting, and purifying to produce a hydrogen stream with better than 99.9% purity.

Utilizing a GTI proprietary gasifier model, along with Hysys® design and simulation package, hydrogen production was simulated. Hydrogen was produced (g H_2 / kg dry biomass) for bagasse, switchgrass, and the nutshell mix at 78.1, 84.1, and 88.3, respectively. Credit was taken for the excess, high value heat produced which corresponds to effective thermal efficiencies of 58% for bagasse, 74% for switchgrass, and 76% for the nutshell mix.

The economics of hydrogen production by gasification of biomass predict that hydrogen can be produced economically. Hydrogen prices from $6 – $9 /GJ can be realized.

As technology improves, natural gas prices increase, and government incentive programs evolve, biomass gasification will present an economical way to produce hydrogen for use in PEM fuel cells and other energy consuming systems.

This study has shown that gasification of biomass can compete with steam methane reforming. However, there are still some obstacles that must be overcome before biomass gasification can replace or compete in this market. The following is a list of challenges that deserve further research:

- Hot Gas Clean Up: Evaluate an economical way to clean syngas at reforming temperatures.
- Membrane Separation: Determine suitable materials for membranes designed for syngas reforming inside the gasifier reactor.
- Fortum Plug Feeder: Initiate testing to reveal if this feeding system can compete or better the well-tested lock hopper feeding method.
- Hydrogen Infrastructure: Develop a strategy to pursue the transition into a hydrogen economy; Improve hydrogen delivery technologies; and Develop codes and standards for hydrogen storage to ease the public's fear of hydrogen as a fuel.

8 References

1. Turn, S.Q., Kinoshita, Z. Zhang, D. Ishimura, and J. Zhou. 1998. An experimental investigation of hydrogen production from biomass gasification. *International Journal of Hydrogen Energy*. 23(8) pp 641-648.
2. E.D. Larson and R.E. Katofsky "Production of Methanol and Hydrogen from Biomass." Princeton University, PU/CEES Report No. 271, July 1992.
3. P.L. Spath, J.M. Lane, M.K. Mann, and W.A. Amos "Update of Hydrogen from Biomass – Determination of the Delivered Cost of Hydrogen", NREL, Milestone Report for the U.S. Department of Energy's Hydrogen Program, April, 2000.
4. Lippert, T. E., G. J. Bruck, Z. N. Sanjana, M. A. Alvin, and R. A. Newby, 1998, "Performance of the Westinghouse APF in Pilot Scale Test Facilities," Proceedings of the Advanced Coal-Based Power and Environmental Systems '98 Conf., June.
5. Newby, R. A., M. A. Alvin, D. M. Bachovchin, E. E. Smeltzer, T. E. Lippert, 1995, "Integrated Low Emissions Cleanup System for Coal-Fuels Turbines, Phase III Topical Report -- Bench-Scale Testing and Evaluation," Final Report to DOE/ METC under Contract No. DE-AC21-87MC24257 (DOE/MC/24257—5059).
6. R. B. Slimane, O. M. Akpolat, and F. S. Lau, R. A. Newby, and S.C. Jain, "Experimental Studies In Support of the Ultra-Clean Gas Cleanup Process Development," Paper Presented at the 18th Annual International Pittsburgh Coal Conference, Dec. 4-7, 2001, Newcastle, New South Wales, Australia.
7. C.E.G. Padro and V. Putsche. "Survey of the Economics of Hydrogen Technologies." NREL Technical Report No. NREL/TP-570-27079, September 1999.

Appendix A – Biomass Resource Assessment and Process Scale Determination

Resource Assessment of Three Candidate Biomass Feedstocks for Hydrogen Production

by

Scott Q. Turn
Milton Staakmann
Aurelien Douette
Hawaii Natural Energy Institute
University of Hawaii

and

Charles M. Kinoshita
Department of Molecular Biosciences and Bioengineering
University of Hawaii

Prepared for

Gas Technology Institute
GTI Subcontract No. PF11663

August 2002

Hawaii Natural Energy Institute
School of Ocean and Earth Sciences and Technology
University of Hawaii

Abstract

A survey was conducted to assemble the latest information on the availability of sugarcane wastes, nutshells, and switchgrass for the purpose of establishing facilities dedicated to hydrogen production using these biomass resources. Sugarcane production was determined to generate the largest fiber stream in the form of bagasse and cane trash totaling nearly 300 million tonnes annually. Brazil, India, and the People's Republic of China (PRC) were the three largest sugarcane producers, the U.S. was tenth. Detailed analysis of sugar milling facilities in these four countries determined that the average capacity of processing facilities in the PRC and India were 2000 and 2300 tonnes per day, respectively, with little variation in different regions of the two countries. Brazil has two primary sugarcane producing regions centered around Sao Paulo state in the southeastern region of the country and Alagoas state in north east with average factory processing capacities of 10,400 and 7,000 tonnes per day, respectively. Production in the U.S. is concentrated in Florida and Louisiana with average processing facilities of 18,000 and 8,500 tonnes per day, respectively. Because bagasse is used for generating steam to satisfy the energy requirements of the host sugar factory, only bagasse in excess of this requirement was considered to be available for hydrogen production. The excess bagasse fiber price in India was reported to be ~$29 per tonne with roughly one third of the cost due to transportation fees. Excess bagasse fiber prices in Hawaii were reported to be $32 to 40 per tonne with transportation accounting for about half of the total cost. Cane trash that can be recovered from the fields is a potential resource roughly equal in size to the bagasse fiber generated in the sugar production process. By collecting cane trash and combining it with the excess bagasse fiber available at the factory, a hydrogen production facility could be supplied with significant quantities of feedstock. Estimates of this resource in the PRC, India, Sao Paulo state, Alagoas state, Louisiana, and Florida were determined to be ~750, 1050, 5200, 3500, 1850, and 5200 tonnes per day, respectively.

World production of nut shells totaled approximately 3 million tonnes in 2001. This entire amount is not available as a feedstock because some of the nuts are marketed to the consumer as in-shell product. Availability of the remaining amount is further reduced due to the small scale of nut processing facilities in the producing countries and the level of effort required to consolidate shells from many small processing facilities. Almond and walnut production in California present the best opportunities for shell consolidation due to the concentrated production areas and the large number of processing facilities located in the Central Valley region. Even with these advantages, the amount of shells of the two nut crops that might be consolidated for hydrogen production was estimated to be ~100,000 tonnes per year (300 tonnes per day) due to competing uses for the resource. Prices for almond and walnut shells in the California market are in the range of $12 to 27 per tonne and $22 to 44 per tonne, respectively. Almond shell has a relatively high alkali content and the potential to contribute to bed agglomeration in a fluidized bed gasifier. Almond shells are estimated to make up 65% of the available combined (almond plus walnut) nut shell resource. It was recommended that clean biomass fuels such as prunings or stumpage from the surrounding orchard lands be used to produce a wood/nut shell blend thereby reducing the deleterious effects of the almond shells and increasing the available feedstock supply to 500 tonnes per day.

Switchgrass is a potential energy crop that is under development for use as a dedicated feedstock for biorefinery applications. Estimates of the delivered cost of switchgrass to processing facilities at the 100,000 and 635,000 tonne per day scales have been conducted in 11 states spanning the Dakotas to Florida. At the smaller size, the lowest delivered cost of switchgrass was $27 to 42 per tonne, depending on the state. This price was available to the first facility sited and prices at subsequent plants would be higher. The price range of delivered costs for the larger sized facility under the same restrictions was $30 to 46 per tonne. Subsequent facilities would incur incrementally higher feedstock costs. It was assumed that feedstock costs varied linearly between the two sizes, 300 and 1900 tonnes per day. Because the switchgrass production would be dedicated to a single plant, the scale of a hydrogen production facility using switchgrass would not be tied to the size and geographic location of host processing facilities as in the case of sugarcane or nut shell feedstocks. This would enable the hydrogen production facility to be more appropriately sized to minimize the cost of its hydrogen product.

Based on the analyses of the availability of sugarcane fiber, nut shells, and switchgrass, it is recommended that initial design calculation for hydrogen production facilities utilizing these resources be conducted at the following scales. For sugarcane fiber, initial design calculations should be performed at the 500, 1000, 2000, and 4000 tonnes per day scale. For nut shells, initial design calculations should be conducted at a scale of 500 tonnes per day with a fuel mixture consisting of 20% walnut shells, 40% almond shells, and 40% clean wood fuel (orchard prunings and culled trees). Hydrogen production facility design calculations utilizing switchgrass should be performed at the 500, 1000 and 2000 tonnes per day scales.

1. Introduction

Hydrogen has the potential to provide clean energy conversion at point of use and can serve as an energy intermediate/carrier for intermittent and low-density primary energy sources. When used in fuel cell applications, hydrogen can be converted into electricity with an efficiency of ~50%. The improvement in efficiency, its reduced environmental impact, and the capacity to generate hydrogen from renewable resources, combine to make it an attractive choice for future energy development. Among the renewable resources, biomass offers several attractive attributes as a primary feedstock for hydrogen production. Biomass is currently used as a fuel for heat or electricity in most parts of the world, at a wide range of scales. Biomass' most attractive applications are those where supply and collection systems have been established to provide raw material for a primary product (i.e. food or fiber) and power production has played a secondary role. These situations often provide large quantities of fiber material at attractive prices and producing renewable hydrogen from this type of resource would be a logical first choice. Under scenarios of favorable regulatory environment or reduced availability of fossil resources, systems dedicated to the production of biomass to supply hydrogen from production facility are also likely.

Hydrogen production from a typical biomass material has a theoretical yield of 16.5% on a mass basis when steam is used as the oxidizer in a simplified, two-reaction mechanism [1]. At this theoretical yield, the energy content of 165 g hydrogen is roughly equal to that of the initial kilogram of biomass feedstock.

A key element in planning a biomass to hydrogen facility is to locate a plant that will have ready access to adequate feedstock supplies. Three potential feedstocks identified for hydrogen production are (1) sugarcane bagasse, the fibrous by-product of sugar or ethanol production, (2) nut shells, and (3) switchgrass, a perennial forage crop under development as a dedicated biofuel. Sugarcane is grown on most land masses that lie in the geographic region bounded by 30° N. and 30° S. latitude. Nut crops are more widely distributed, with varieties grown in temperate climates at greater distances from the equator. Switchgrass grows in temperate climates. To assess the potential for hydrogen production from these three biomass resources, the Hawaii Natural Energy Institute conducted a survey and compiled the latest information on their availability in the United States and major sugar and nut producing countries. Types of data included in the survey for nut shells and sugar cane bagasse included total production by country, geographic location of production areas, sizes of sugar and nut processing facilities, distribution of factories within the major production areas, properties of each material relevant to use as fuel, and temporal production of residues. This information is presented in the following sections. Based on this information, sizes for initial design calculations for hydrogen production facilities has been proposed.

2. Resource Assessment

2.1 Sugarcane

According to statistics compiled by the Food and Agriculture Organization of the United Nations (FAO), approximately 1.25 billion tonnes of sugar cane were produced in the world in 2001 [2].

Production of sugar cane for countries producing more than 100,000 tonnes in 2001 is shown in Table 1. Brazil and India, the two largest producers, account for more than 50.1% of the total.

Of the 81 countries listed in Table 1, the nine largest producers, Brazil, India, the People's Republic of China (PRC), Mexico, Thailand, Pakistan, Cuba, Colombia, and the U.S. are responsible for more than 75% of global production. The balance is contributed by 95 countries that produce less than 100,000 tonnes per year. Figure 1 shows the trend in world sugarcane production for the last 10 years. World sugar production has remained relatively constant for the past five years at ~1.25 billion tonnes. The large number of sugar producing countries makes a detailed treatment of each country an extensive exercise. As such, the remainder of this report will concentrate on the three leading producers, Brazil, India, and the PRC, and the tenth largest producer, the United States. The characteristics of the sugar industries in these four countries provide a representative cross section of those found in the remainder of the world with regard to scale of milling facilities and strategies to site hydrogen production facilities. Production data for Brazil, India, PRC, and the U.S. are shown in Figure 2 for the last 10 years. Trends for the four countries over the period from 1997 to 2002 are relatively level, with the five-year average differing from the 2001 values by less than 1% in all cases. In total, these trends demonstrate that sugarcane production is relatively stable from year to year and would appear to be a dependable supply of feedstock for hydrogen production.

Table 1. Sugar cane production for countries producing more than 100,000 tonnes in 2001 [2].

Country	Sugarcane Production (10^6 tonnes)	Country	Sugarcane Production (10^6 tonnes)
Brazil	339.1	Malawi	1.9
India	286.0	Réunion	1.9
People's Rep. of China	77.8	Zambia	1.8
Mexico	49.5	Panama	1.8
Thailand	49.1	Congo, Dem Rep of	1.7
Pakistan	43.6	Japan	1.6
Cuba	35.0	Malaysia	1.6
Colombia	33.4	Tanzania, United Rep of	1.5
United States of America	33.2	Uganda	1.5
Australia	31.0	Trinidad and Tobago	1.5
South Africa	23.9	Cameroon	1.4
Indonesia	23.5	Morocco	1.3
Philippines	21.1	Côte d'Ivoire	1.3
Guatemala	16.9	Belize	1.2
Egypt	15.6	Sri Lanka	1.1
Viet Nam	15.1	Haiti	1.0
Argentina	15.0	Senegal	0.89
Venezuela, Boliv Rep of	8.1	Guadeloupe	0.80
Peru	8.0	Nigeria	0.70
Bangladesh	6.9	Barbados	0.52
Ecuador	6.0	Congo, Republic of	0.45
Myanmar	5.9	Papua New Guinea	0.43
Mauritius	5.5	Burkina Faso	0.40
El Salvador	5.5	Mozambique	0.40
Kenya	5.2	Chad	0.36
Dominican Republic	5.0	Angola	0.33
Sudan	5.0	Puerto Rico	0.32
Honduras	4.1	Mali	0.30
Zimbabwe	4.1	Laos	0.30
Nicaragua	4.0	Guinea	0.27
Swaziland	3.9	Liberia	0.25
Bolivia	3.9	Gabon	0.24
Paraguay	3.9	Somalia	0.22
Costa Rica	3.8	Martinique	0.21
Guyana	3.0	Saint Kitts and Nevis	0.19
Ethiopia	2.4	Burundi	0.17
Jamaica	2.4	Cambodia	0.16
Fiji Islands	2.3	Uruguay	0.16
Nepal	2.2	Niger	0.15
Madagascar	2.2	Ghana	0.14
Iran, Islamic Rep of	2.1		

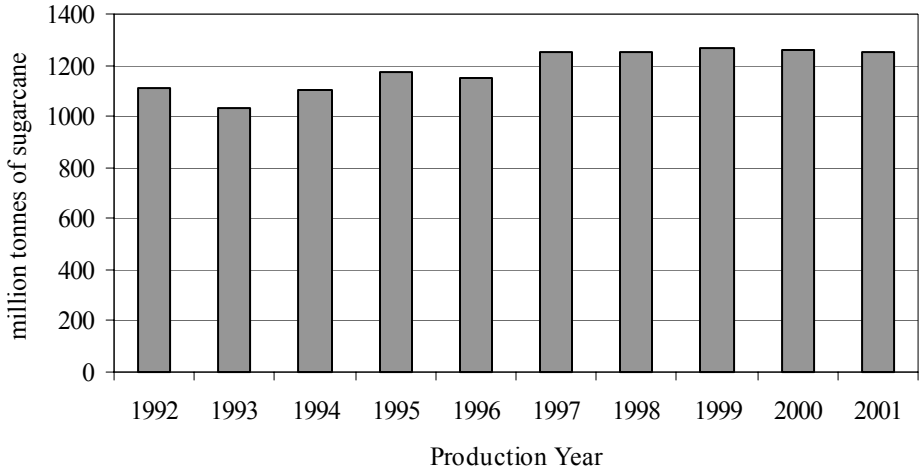

Figure 1. World sugarcane production for the period, 1992 to 2001 [2].

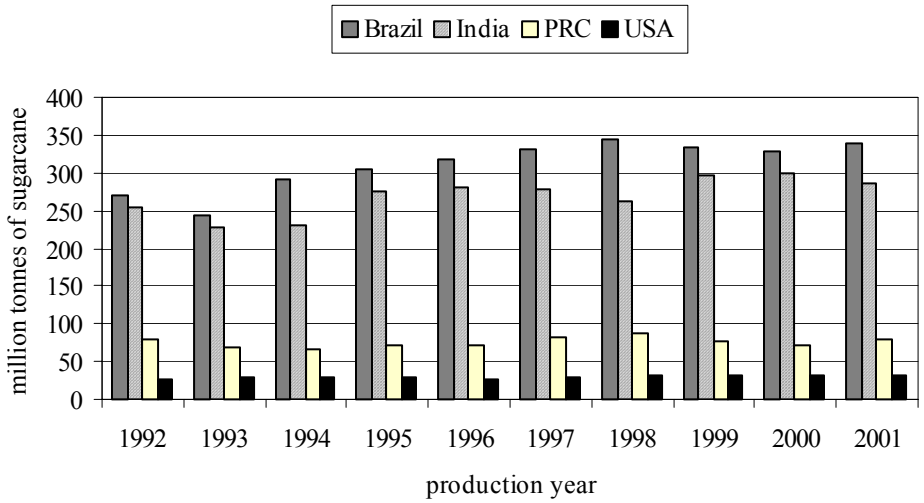

Figure 2.. Annual sugar cane production for Brazil, India, PRC, and the United State for the ten-year period, 1992 to 2001 [2].

Due to the relatively constant climates in the equatorial belt where sugarcane is grown, the plant is not subjected to the constraints of well-defined seasonal growth periods that are the norm in temperate climates. Although the cultural practices for sugarcane production in most countries are based on a one-year growing season, Hawaii, in the United States, has adopted a two-year growing season to maximize the production of sucrose on an annualized basis. Thus sugarcane yields in Hawaii are greater than the rest of the world, however land area planted to sugarcane is harvested only once every two years. Average yields in Brazil, India, PRC, the U.S. excluding Hawaii, and Hawaii are shown in Table 2. Yields in Brazil, India, and PRC are essentially equal with the U.S. (excluding Hawaii) having only incrementally higher yields, ~4 to 5 tonnes ha^{-1} yr^{-1}. Hawaii has higher yields than the rest of the U.S. due primarily to its more favorable

climate. Comparison of yields serves to demonstrate that fiber generated from sugarcane can be expected to have roughly equal area densities (with the exception of Hawaii) of ~8 to 8.5 tonnes ha^{-1} yr^{-1}, assuming a 12% fiber content. The fiber density for Hawaii is about 11.5 tonnes ha^{-1} yr^{-1}.

Table 2. Ten year average of sugar cane yields in selected countries and states [2].

Country or State	Yield (tonnes ha^{-1})	Harvest Frequency (yr)	Yield (tonnes ha^{-1} yr^{-1})
Brazil	67.0	1	67.0
India	68.3	1	68.3
PRC	67.1	1	67.1
U.S. (excluding Hawaii)	72.0	1	72.0
Hawaii	191.0	2	95.5

Bagasse is the fibrous byproduct remaining after sugarcane has been milled to recover sucrose. In the industry, bagasse normally is considered to be the fiber plus the accompanying moisture, with a wet-basis moisture content of ~50%, e.g. roughly equal parts of fiber and water with small amounts of sucrose and soluble solids. To avoid confusion, the term fiber (or bagasse fiber) will be used in the remainder of this document when referring to cellulosic dry matter. Fiber as a percentage of sugarcane varies depending on the particular variety and the cultural practices employed, however, an average value of 12% fiber content is reasonable for the purposes of estimating feedstock availability on a gross scale. Thus every tonne of sugarcane will yield, after milling, 0.12 tonnes of fiber, or 0.24 tonnes of bagasse at 50% moisture, wet basis. Table 3 summarizes the bagasse and fiber produced from sugarcane milling operations in the four countries of interest. In addition to the fiber produced from sugar milling operations, an equivalent amount of fiber is produced by the sugarcane plant in the form of cane trash, the leaves and tops that are usually burned or left in the field during the harvest operations. Cane trash has long been recognized as a significant potential source of biomass. Cost effective methods for collecting this resource is still in development.

Table 3. Production of bagasse and cane trash fibers in four target countries during 2001 season based on data from Table 1.

Country	Bagasse (10^6 tonnes)	Bagasse Fiber (10^6 tonnes)	Cane Trash Fiber (10^6 tonnes)	Total Fiber (10^6 tonnes)
Brazil	81.4	40.7	40.7	81.4
India	68.6	34.4	34.4	68.6
PRC	19.1	9.6	9.6	19.1
U.S.	7.6	3.8	3.8	7.6

Bagasse is a fibrous woody material consisting of longer fibers originating from the rind of the cane and shorter fibers that are produced from the pithy core of the stalk. Characteristics of bagasse are dependent on the variety of cane, cultural production practices, and the milling methods employed. Figure 3 shows a comparison of particle size distributions of bagasse generated at the Waialua Sugar Co. factory [3] and the Hawaiian Commercial & Sugar, Inc.'s Paia factory [4]. The Paia factory operated a diffusion process for sucrose removal rather than the more common five-mill tandem employed at the Waialua facility. The diffusion process is most effective at sucrose extraction when cane has been prepared into smaller particles. Differences in the particle size distributions are noticeable in Figure 3. The geometric mean particle sizes for the Waialua and Paia factories were 2.2 mm and 1.3 mm, respectively, providing a range of particle sizes that may be expected for bagasse. Particle size distribution can affect various aspects of a thermochemical conversion process design including materials handling, fuel feeding, and required reactor residence time.

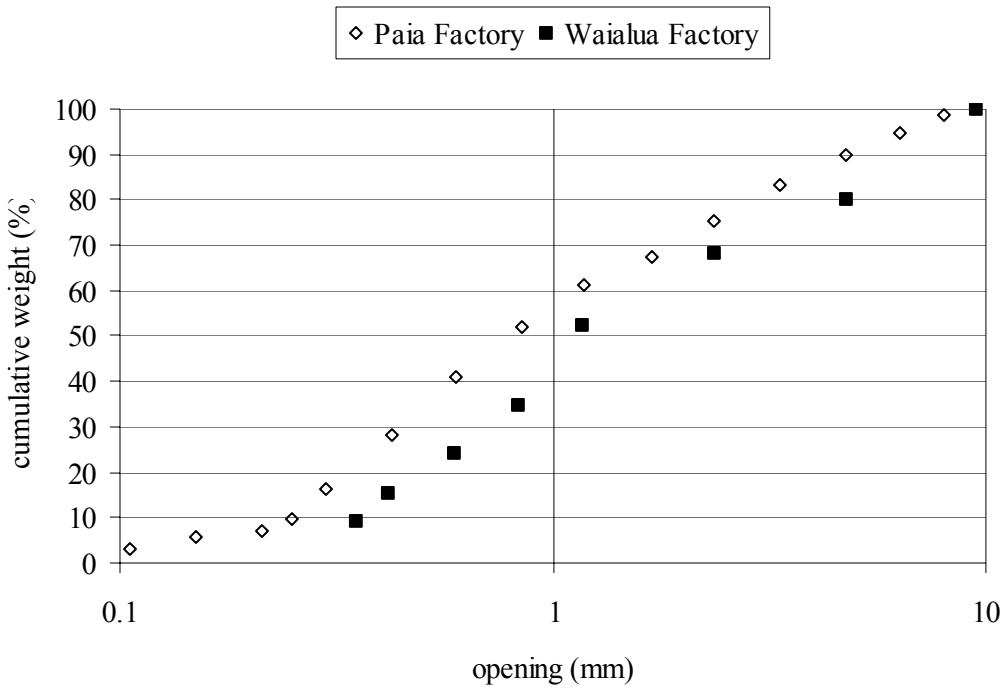

Figure 3. Particle size distributions of bagasse samples generated from the Paia sugar factory [4] (Hawaiian Commercial & Sugar, Co.) and the Waialua Sugar Co. factory [3].

Physicochemical properties of bagasse fiber at the point of use may also vary, depending on the sugarcane variety, production and harvesting practices, sugar factory operations, and storage conditions (if required). Table 4 includes analyses of bagasse from selected sources. Note that the ash content of the samples varies from 1.6% to as high as 13.75% on a dry basis. High ash content in the fuel increases material handling requirements, and reduces fuel energy content. In thermochemical conversion facilities, ash may contribute to fouling of working surfaces and agglomeration in fluidized bed applications. The four samples from the HC&S Pu`unene factory

have ash contents above 10%. This bagasse was stored in open piles for several months, then reclaimed with a payloader for use in the factory's boiler. These additional operations may be largely responsible for the higher ash content. The incorporation of soil with sugarcane harvested in Hawaii is evident in the high alumina and iron content of the ash. Hand-harvested and machine-harvested sugarcane can be expected to include lesser amounts of these contaminants as evidenced by the analyses of material from elsewhere in the world. Energy content (higher heating value) of the samples varied from 16.7 to 18.9 MJ kg^{-1} (dry basis). Hydrogen concentration in the samples ranged from 5.1 to 7.0% on a dry basis and fixed carbon, which can be converted to H_2 and CO via endothermic reactions with steam, was found to lie in a range from 8.5 to 20.1%.

Table 4. Summary of fuel characteristics of bagasse from various sources (continued on following page).

		Proximate Analysis				Higher Heating Value			Ultimate Analysis							
Sample Origin, if known		Ash	Volatile	Fixed C		BTU/lb	MJ/kg		C	H	N	S	Ash	O*	Cl	Ref.
HC&S, Pu`unene Factory, 1 Maui, Hawaii		13.75	76.02	10.23		7226	16.8		45.32	5.11	0.23	0.05	13.75	35.5	0.04	[5]
HC&S, Pu`unene Factory, 2 Maui, Hawaii		11.84	77.09	11.07		7171	16.7		45.72	5.27	0.24	0.05	11.84	36.85	0.03	[5]
HC&S, Pu`unene Factory, 3 Maui, Hawaii		11.66	77.11	11.23		7194	16.7		44.62	5.17	0.21	0.04	11.66	38.27	0.03	[5]
HC&S, Pu`unene Factory,4 Maui, Hawaii		12.25	79.23	8.52		7486	17.4		46.12	5.47	0.22	0.04	12.25	35.86	0.04	[5]
Not Specified		7.7	79.6			7823	18.2		45.2	5.4	0.2	0.02		41.8	0.03	[6]
India		4.2	75.8	20.1		7785	18.1		44.1	5.26				44.4		[7]
U.S. Sugar Corp., Clewiston, Florida		1.6	82.1	16.3					49.6	6	0.5			43.9		[8]
Cuba		2.7	82.6	14.7		7445	17.3		47.2	7.0			2.7	43.1		[9]
Sudan		6.8				8103	18.9		46.7	6.5	0.2	0.02	6.8	39.8	0.06	[10]
Waialua Sugar Co. Oahu, Hawaii		5.8	79.2	14.9		7694	17.9		46.3	5.27	0.12	0.05	5.8	42.4	0.05	[11]
HC&S, Paia Factory, 1 Maui, Hawaii		3.99	84.15	11.86		7911	18.4		47.81	5.64	0.15	0.16	3.99	42.25		[12]
HC&S, Paia Factory, 2 Maui, Hawaii		5.06	83.11	11.83		7927	18.4		47.68	5.64	0.15	0.06	5.06	41.41		[12]
HC&S, Paia Factory, 3 Maui, Hawaii		3.61	84.73	11.66		8010	18.6		48.28	5.63	0.12	0.04	3.61	42.32		[12]

* oxygen concentration calculated by difference, i.e. 100% minus the sum of C, H, N, S, and Ash.

Table 4 (cont'd). Summary of fuel characteristics of bagasse from various sources.

		Ash Composition													
Sample Origin, if known		SiO_2	Al_2O_3	TiO_2	Fe_2O_3	CaO	MgO	Na_2O	K_2O	P_2O_5	SO_3	Cl	CO_2	MnO_2	Ref.
HC&S, Pu`unene Factory, 1 Maui, Hawaii		48.37	20.39	3.54	14.16	4.07	3	0.93	1.63	0.83	0.3	<0.01	0.1		[5]
HC&S, Pu`unene Factory, 2 Maui, Hawaii		46.53	20.92	3.63	14.96	4.39	3.04	0.97	1.66	0.86	0.42	0.03	0.2		[5]
HC&S, Pu`unene Factory, 3 Maui, Hawaii		44.78	21.33	3.84	15.93	4.16	2.88	0.99	1.78	0.94	0.36	<0.01	0.11		[5]
HC&S, Pu`unene Factory,4 Maui, Hawaii		43.91	19.6	4.08	16.73	4.64	3.95	0.95	1.65	0.93	0.54	<0.01	0.12		[5]
Not Specified		72.29	7.99	0.55	6.16	4.16	2.34	0.95	4.49	0.93				0.14	[6]
Sudan		73.19	8.29	0.65	5.37	4.14	2.53	0.67	4.11	0.91				0.14	[10]
Waialua Sugar Co. Oahu, Hawaii		42.93	23.77	2.54	16.86	2.19	2.07	0.57	3.22	1.3	0.6	<0.01	0.4		[11]
HC&S, Paia Factory, 1 Maui, Hawaii		40.37	22.26	4.44	21.78	3.73	1.31	0.24	2.53	1.12	0.63				[12]
HC&S, Paia Factory, 2 Maui, Hawaii		40.31	23.31	4.12	22.57	3.47	1.26	0.25	2.12	1.07	0.52				[12]
HC&S, Paia Factory, 3 Maui, Hawaii		44.94	21.19	3.05	18.36	3.31	1.79	0.29	3.11	1.21	1.55				[12]

Perhaps the single attribute that makes the sugar industry most attractive as a source of feedstock for hydrogen production is the large quantities of biomass that are available at a central location as the result of milling operations. Sugarcane is commercially milled in facilities with installed crushing capacity of less than 1000 tonnes of sugarcane per day to ~40,000 tonnes per day. Note that crushing capacity is largely dictated by the rated throughput of the mill tandems but an adequate sugarcane supply must be available to operate a factory at its rated capacity. In practice, factories may not operate at rated capacity at the beginning and end of the milling season when the factory is being brought up or shut down, or during periodic maintenance shut downs throughout the milling season. A factory's availability is an index used to characterize the factory up-time efficiency. Availability is defined as the number of hours of milling operation divided by the total number of hours in the milling season. Information about the installed crushing capacities for factories in the four countries of interest is discussed in the following sections.

The distribution of installed cane crushing capacities measured in tonnes cane per day (TCD) of PRC sugar factories is shown in Figure 4. PRC has a total of 193 cane sugar factories with an average factory crushing capacity of ~2,000 tonnes cane per day [13]. The cane sugar industry in PRC is concentrated in nine southern provinces. Table 5 shows the number of factories located within each of these provinces and the average factory size. As evidenced by the data, the sugar industry in PRC is concentrated in Guang Dong and Guang Xi provinces with combined crushing capacities equal to 67% of the country total and average mill sizes exceeding the national average. Only Fujian province has a larger average mill size at 2,870 TCD. Of the 11 factories with milling capacities of 5,000 TCD or greater, seven are located in Guang Dong, and two each in Guang Xi and Fujian. The largest factory (10,000 TCD) is located in Guang Xi province.

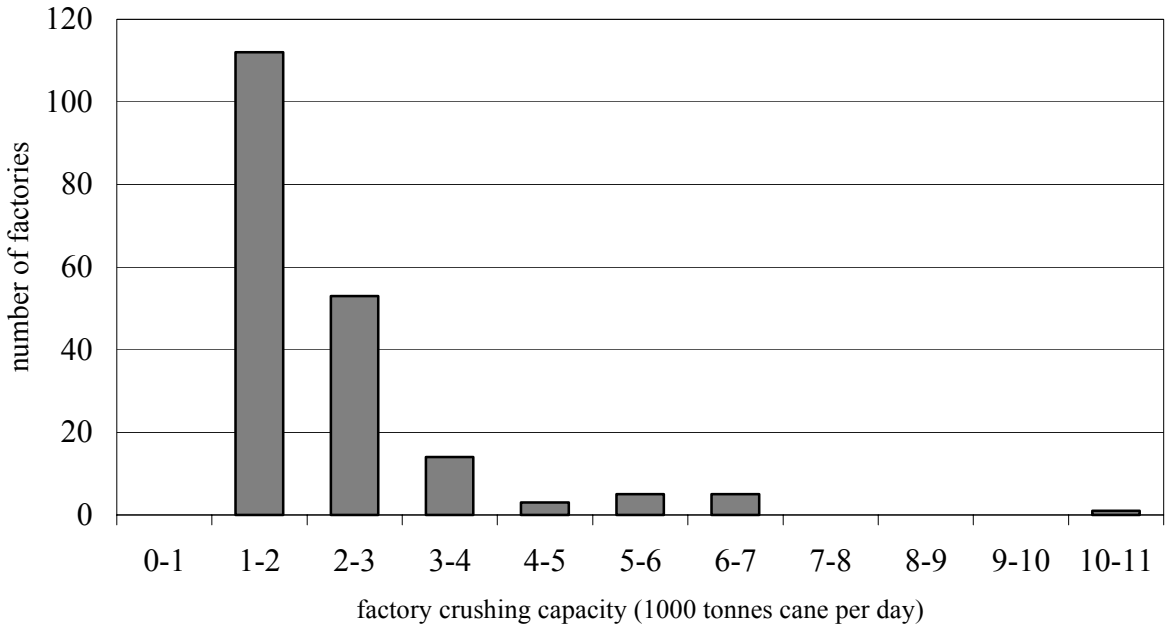

Figure 4. Distribution of factory crushing capacities in the PRC cane sugar industry [13].

Table 5. Summary of PRC sugar factory milling capacity by province [13].

Province	No. of Mills	Total Capacity (TCD)	Average Capacity (TCD)
Fujian	10	28,700	2,870
Guang Dong	54	154,500	2,417
Guang Xi	56	124,000	2,021
Hainan	13	20,200	1,554
Hunan	9	13,400	1,489
Hubei	1	1,000	1,000
Jiang Xi	13	22,200	1,585
Sichuan	7	7,000	1,000
Yunnan	30	45,050	1,502

The distribution of installed cane crushing capacities (TCD) of Indian sugar factories is shown in Figure 5. The average installed milling capacity in the country is ~2300 TCD [13] with a standard deviation of ~70 TCD. The average size and relatively narrow spread of the distribution is largely the result of policy established by the Indian government's Ministry of Industry that grants licenses for new mills only at the 2500 TCD scale [14]. There are 425 sugar factories distributed among 17 Indian states [13]. Table 6 shows the number of factories located within each of these states and the average factory size. As evidenced by the data, the sugar industry in India is concentrated in Uttar Pradesh and Maharashtra states that have a combined crushing capacity equal to 55% of the country total and average mill sizes roughly equal to the national average. Table 6 also shows the number of factories that have milling capacities larger than 5000 TCD and Uttar Pradesh and Maharashtra have 12 and 6, respectively, of the 33 in the country.

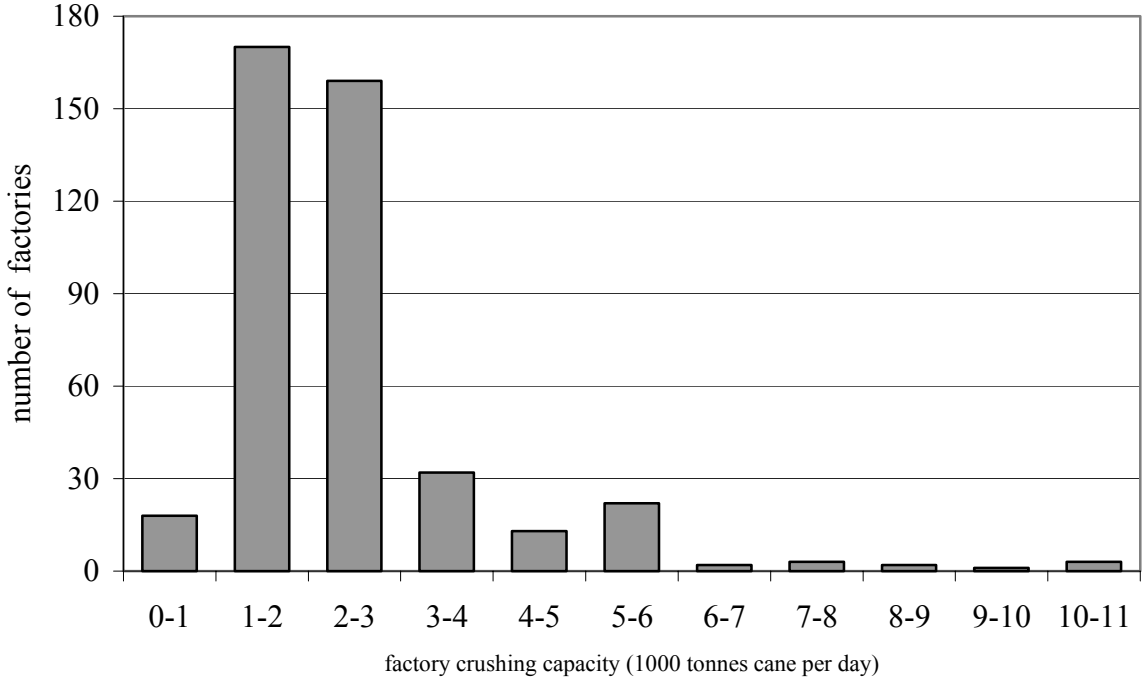

Figure 5. Distribution of factory crushing capacities in the Indian cane sugar industry [13].

Table 6. Summary of Indian sugar factory milling capacity by state [13].

State	No. of Factories	Total Capacity (TCD)	Average Factory (TCD)	No. of Factories >5000 TCD
Andhra Pradesh	36	70,500	1,958	3
Assam	4	6,800	1,700	0
Bihar	24	38,850	1,619	1
Goa	1	1,250	1,250	0
Gujarat	18	56,950	3,164	4
Haryana	12	30,050	2,504	1
Karnataka	30	72,500	2,417	4
Kerala	3	3,200	1,067	0
Madhya Pradesh	9	13,250	1,472	0
Maharashtra	111	252,950	2,279	6
Nagaland	1	1,000	1,000	0
Orissa	8	14,750	1,844	0
Pondicherry	2	3,250	1,625	0
Punjab	23	51,250	2,228	0
Rajasthan	3	3,750	1,250	0
Tamil Nadu	28	74,300	2,654	2
Uttar Pradesh	112	281,535	2,514	12

Geographic distribution of the sugar factories in Maharashtra and Uttar Pradesh are shown in Figures 6 and 7, respectively [15]. Due to the extensive sugarcane cultivation and the relatively small milling capacities, the factories are densely located across the two states and present opportunities for consolidating bagasse from neighboring factories at a central location. By visual inspection of the maps in the figures, it is readily apparent that several locations exist where 5 to 10 factories are located within a 50 km radius of a given point. The management of Ugar Sugar Works Ltd, in Maharashtra state reports purchasing 26,000 tonnes of bagasse from factories 35 to 120 km away to use as fuel in their power plant and selling electricity to the utility grid [16]. During the 2001/2002 milling season, the purchase price for bagasse varied from 400 to 600 Rupees per tonne with an average price of 510 Rupees per tonne at the producing/selling factory [16]. At the current exchange rate (49 Rupee = US$1) this translates to a cost range of $8.20 to $12.30 per tonne and an average price of $10.40 per tonne. Average transportation costs were roughly 207 Rupees per tonne, or $4.20 per tonne, yielding a average delivered cost of $14.60 per tonne. Note that these prices are for bagasse and that the cost of delivered bagasse fiber would be ~$29 per tonne with ~$8.50 per tonne being paid for transport.

Figure 6. Geographic distribution of sugar factories in Maharashtra State, India [15]. Scale: 1 cm = 50 km.

Figure 7. Geographic distribution of sugar factories in Uttar Pradesh State, India [15]. Scale: 1 cm = 50 km.

In Brazil, the juice extracted from sugarcane is used to produce both sugar and ethanol. Facilities may produce either or both of the two products. The distribution of installed cane crushing capacities (TCD) of Brazilian sugar factories and distilleries is shown in Figure 8. The average installed milling capacity in the country is ~7000 TCD with a standard deviation of ~350 TCD. There are 256 sugar factories and distilleries distributed among 18 states [13]. Table 7 shows the number of units located within each of these states and the average milling capacity. Note that the distilleries tend to be smaller than the sugar factories with respective average capacities of 3200 and 8200 TCD. As evidenced by the data, the sugar industry in Brazil is concentrated in Sao Paulo state, which contains 46% of factories and 56% of the milling capacity in the country. The state-average sugar (excluding refineries) milling capacity for Sao Paulo is

10,400 TCD, 27% larger than the national average. The state of Alagoas has 24 factories, or ~10% of the total, with an average capacity ~14% smaller than the countrywide average for sugar facilities. The geographic distribution of sugarcane processing facilities in major sugar producing regions is shown in Figures 9 through 11. In northeastern Brazil, sugarcane processing facilities are located in the coastal region in the states of Alagoas, Pernambuco, and Paraiba. By visual inspection, it is readily apparent that 10 to 12 mills are often located within 50 km of a central location. Figures 10 and 11 show that similar concentrations of factories are present in Sao Paulo and Parana states.

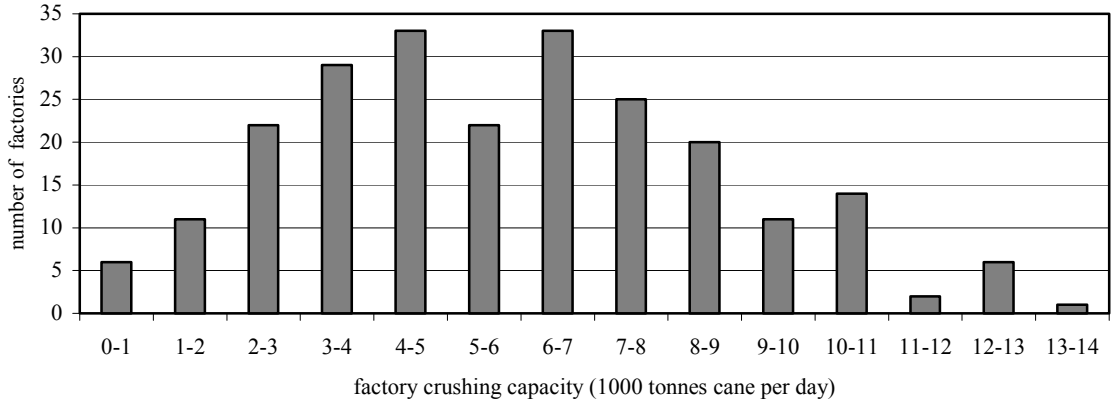

(a)

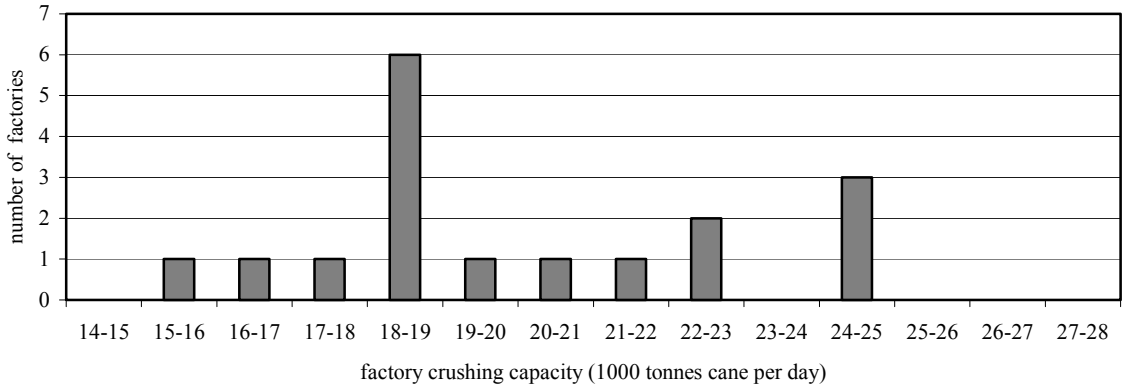

(b)

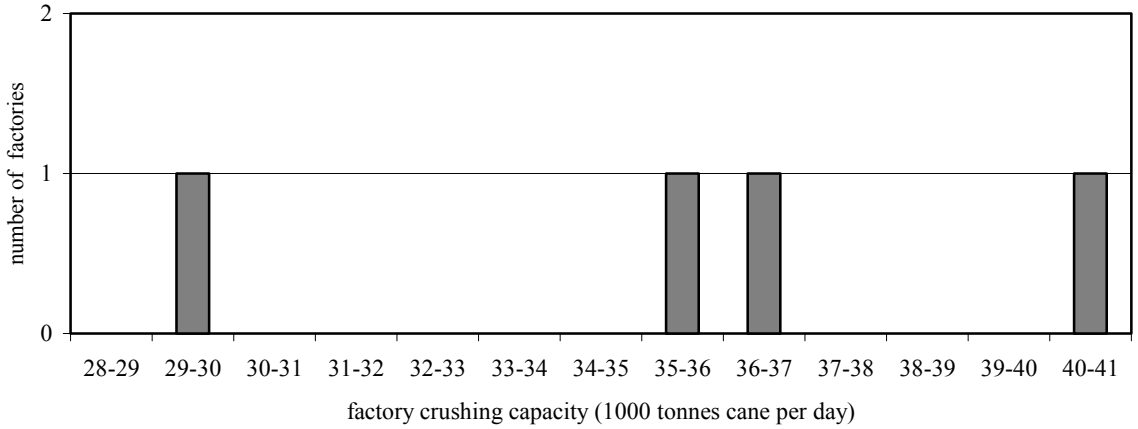

(c)

Figure 8. Distribution of factory crushing capacities in the Brazilian sugarcane industry [13].

Table 7. Summary of Brazilian sugar factory milling capacity by state [13].

State	Type of Facility	No. of Facilities	Total Capacity (TCD)	Average Capacity (TCD)
Goias	sugar	7	31,185	4,455
Goias	ethanol	5	16,268	3,254
Maranhao	sugar	2	8,300	4,150
Mato Grosso de Sul	sugar	6	33,240	5,540
Mato Grosso de Sul	ethanol	2	12,500	6,250
Mato Grosso	sugar	3	38,000	12,667
Mato Grosso	ethanol	5	15,258	3,052
Minas Gerais	sugar	8	48,100	6,013
Minas Gerais	ethanol	8	16,700	2,088
Para	sugar	1	2,679	2,679
Paraiba	sugar	2	6,500	3,250
Parana	sugar	18	119,400	6,633
Parana	ethanol	4	12,700	3,175
Pernam-buco	sugar	20	131,532	6,577
Pernam-buco	ethanol	1	4,500	4,500
Rio de Janeiro	sugar	9	46,200	5,133
Rio de Janeiro	ethanol	1	2,400	2,400
Rio Grande do Norte	sugar	2	12,500	6,250
Rio Grande do Sul	ethanol	1	1,000	1,000
Santa Catarina	sugar	1	4,500	4,500
Sao Paulo	sugar	88	918,200	10,434
Sao Paulo	ethanol	30	99,302	3,310
Sergipe	sugar	1	5,600	5,600
Alagoas	sugar	24	169,260	7,053
Bahia	sugar	2	7,000	7,000
Ceara	sugar	2	2,400	2,400
Espirito Santo	sugar	3	12,200	6,100

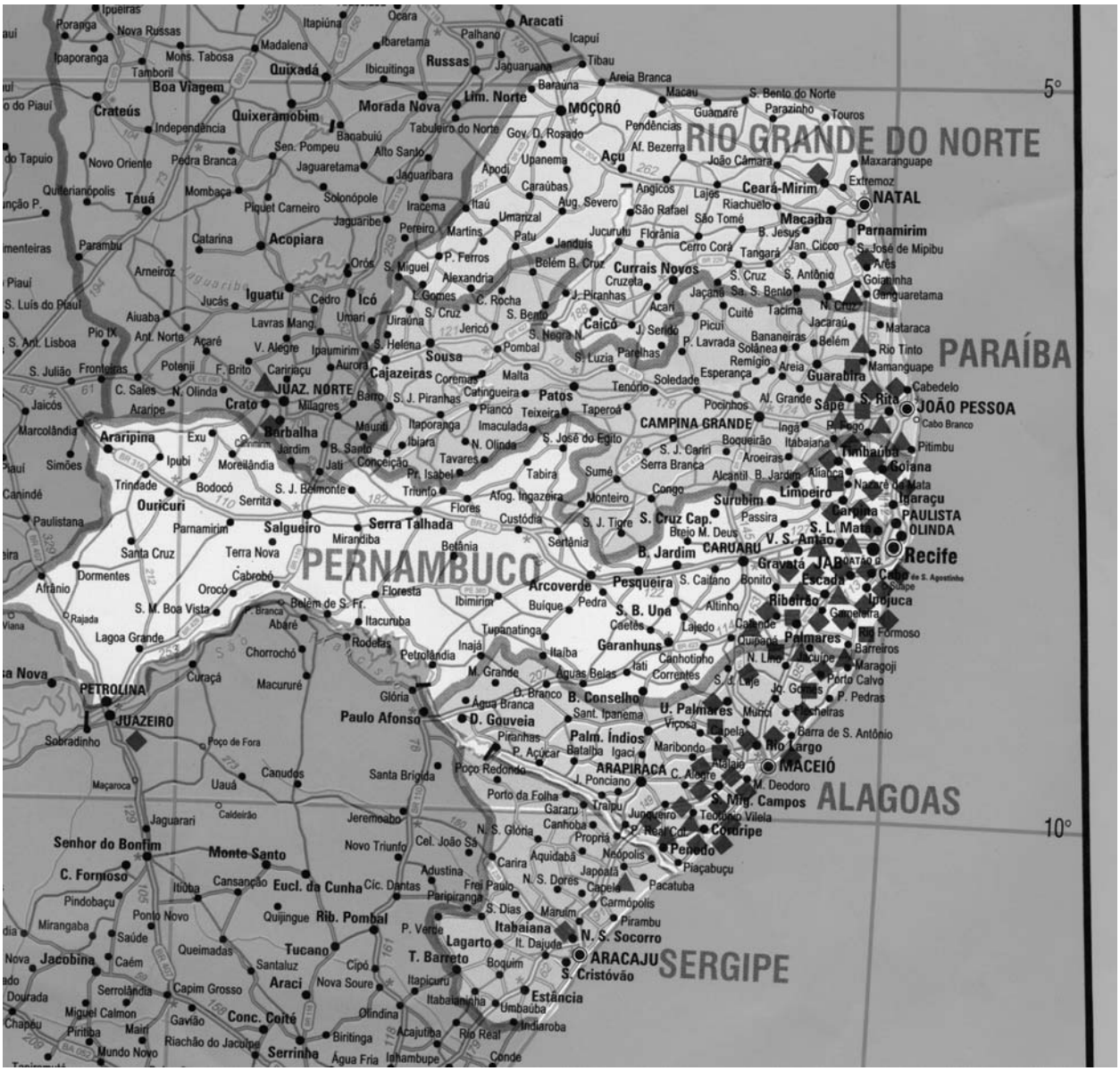

Figure 9. Geographic distribution of sugar factories in the north eastern region of Brazil [17]. Diamonds and triangles represent locations of sugar factories and distilleries, respectively. Scale: 1 cm = 52 km.

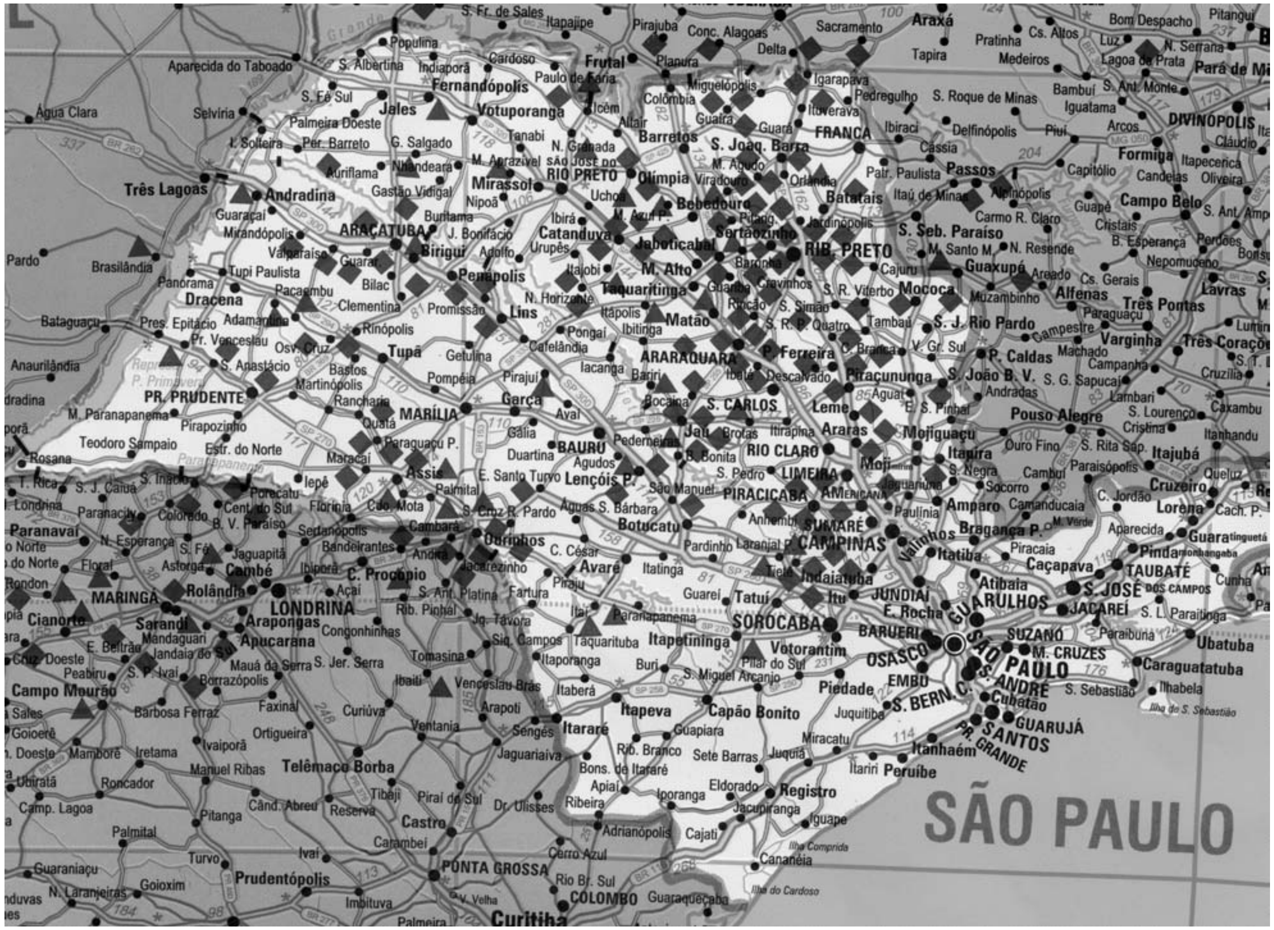

Figure 10. Geographic distribution of sugar factories in Sao Paulo state, Brazil [17]. Diamonds and triangles represent locations of sugar factories and distilleries, respectively.
Scale: 1 cm =67 km.

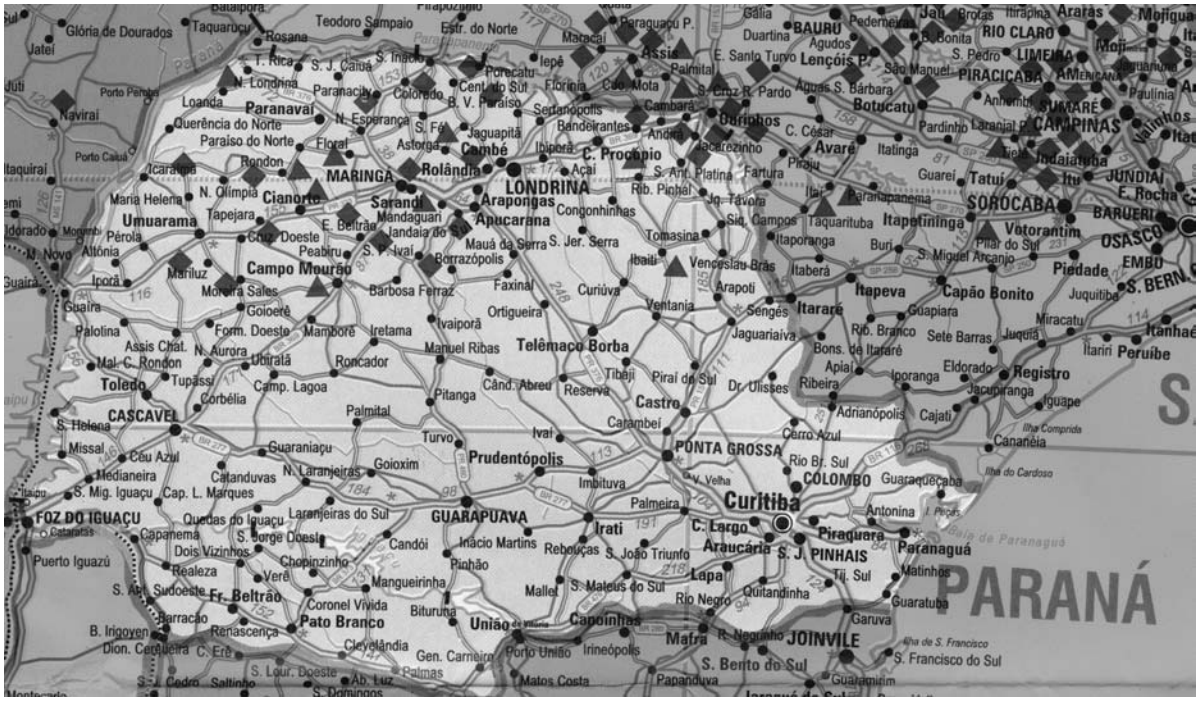

Figure 11. Geographic distribution of sugar factories in Parana state, Brazil [17]. Diamonds and triangles represent locations of sugar factories and distilleries, respectively.
Scale: 1 cm = 50 km.

The distribution of installed cane crushing capacities (TCD) of sugar factories in the U.S. including Puerto Rico is shown in Figure 12 [18]. The average installed milling capacity in the country is ~10,000 TCD with a standard deviation of ~1000 TCD. There are 29 sugar factories located in Florida, Louisiana, Texas, Hawaii, and Puerto Rico. Table 8 shows the number of factories located within each state/territory and the average installed milling capacity. As evidenced by the data, the sugar industry in the U.S. is concentrated in Louisiana and Florida which contain 53 and 37% of the milling capacity in the country, respectively. Note that the factories in Florida have an average capacity of 18,000 TCD, more than double the average of Louisiana. Geographic distribution of factories in Florida, Louisiana, and Hawaii are shown in Figures 13, 14, and 15, respectively [18]. Note that the five factories shown on the map of central Florida are located within 25 km of a central location. The density of Louisiana sugar factories is similar as shown in Figure 14; seven facilities are located within 25 km of a central location on the left hand side of the map and five facilities are located within a radius of 37 km on the right hand side of the figure. The two sugar factories in Hawaii are located on islands approximately 350 km apart.

Until recently, two factories operated on the island of Kaua`i in Hawaii and excess bagasse was transported by trailer truck from the Olokele factory to the Lihue factory for use in the latter's combustion/steam power plant. Lihue sold electricity to the grid under a firm power contract with the utility and bought the excess bagasse at a price of $16 to 20 per tonne ($32 to 40 per tonne fiber) delivered to its factory. Of this total cost, roughly $9 per tonne of bagasse ($18 per tonne of fiber) was paid for transportation with the remainder covering the fuel cost.

Table 8. Summary of U.S. and Puerto Rico sugar factory milling capacity [18].

State	No. of Factories	Total Capacity (TCD)	Average Capacity (TCD)
Louisiana	18	153,728	8,540
Florida	6	108,844	18,141
Hawaii	2	9,469	4,735
Texas	1	9,977	9,977
Puerto Rico	2	9,070	4,535

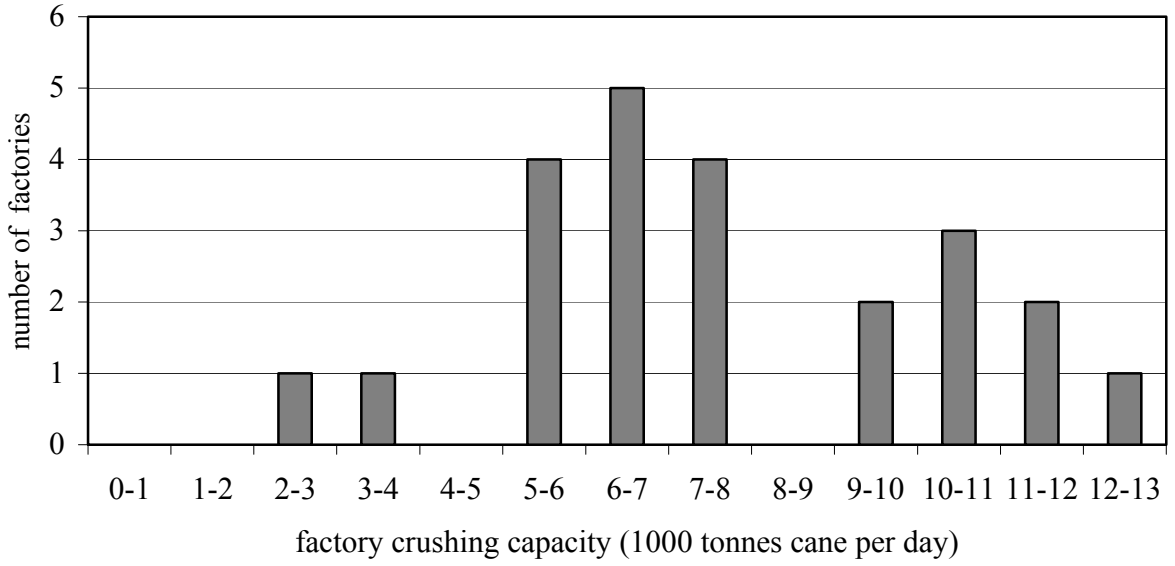

(a)

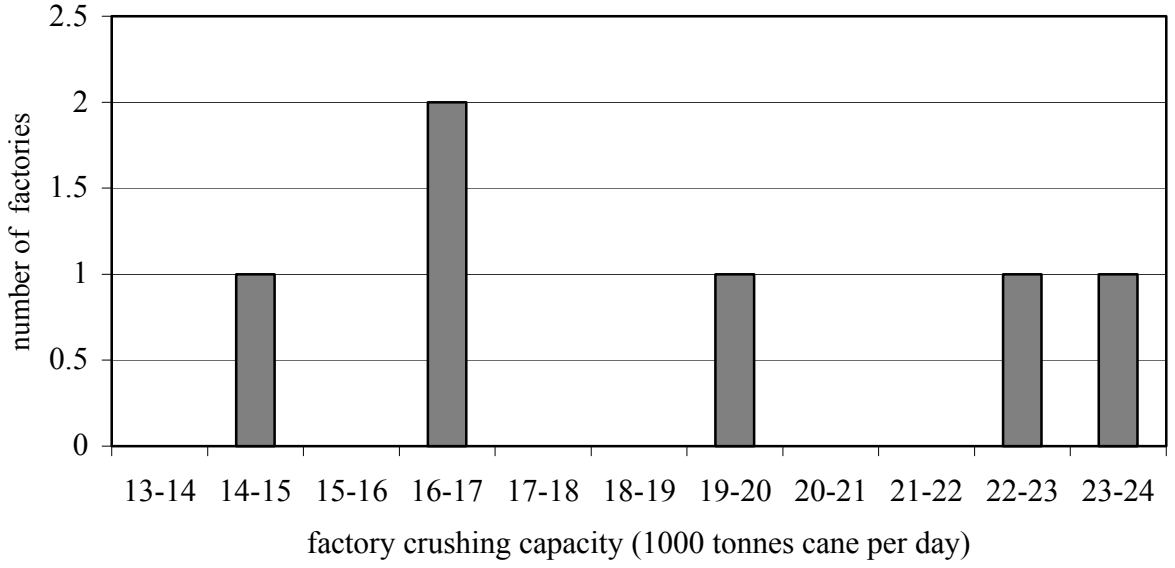

(b)

Figure 12. Distribution of factory crushing capacities in the U.S. (including Puerto Rico) cane sugar industry [18].

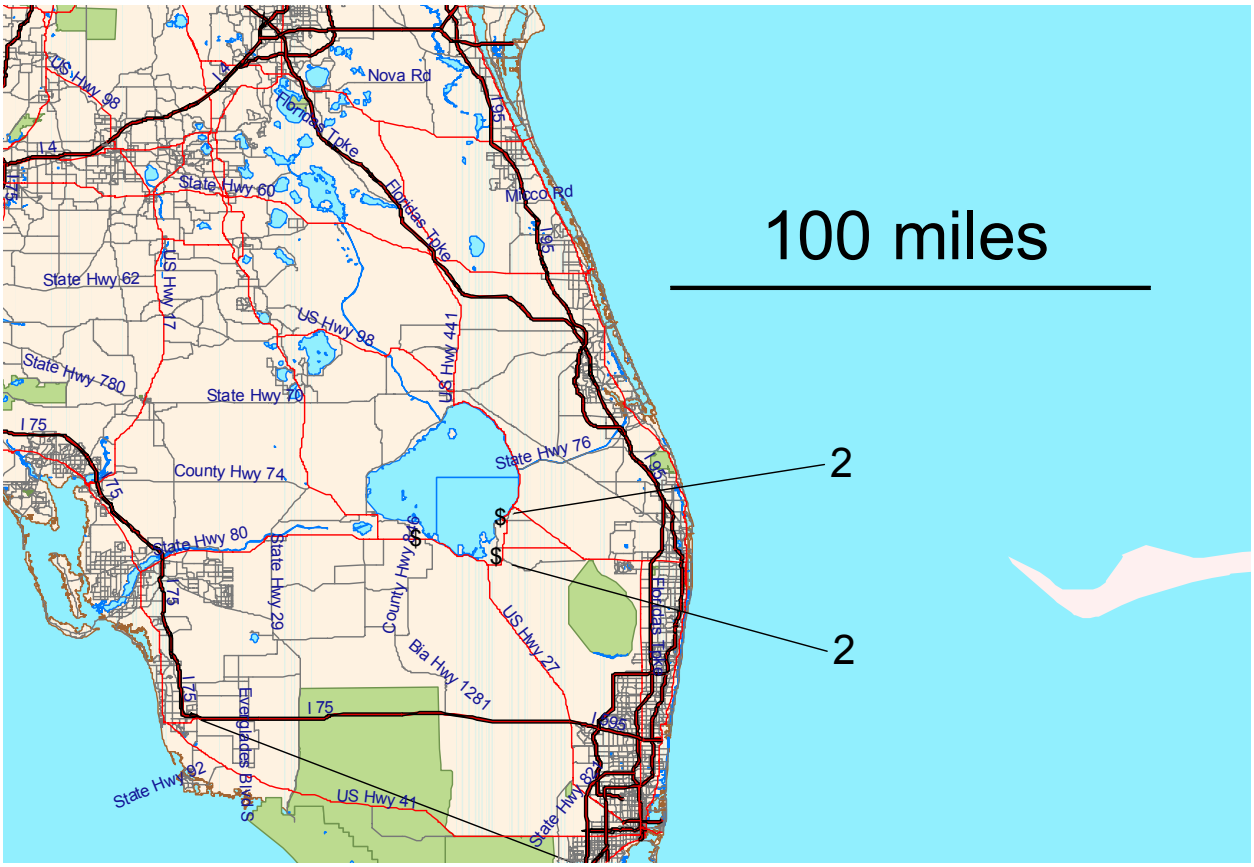

Figure 13. Geographic location of five of the six sugar factories in Florida [18,19]. Labels indicate the number of facilities located in close proximity to the point. Scale: 1 cm = 25 km.

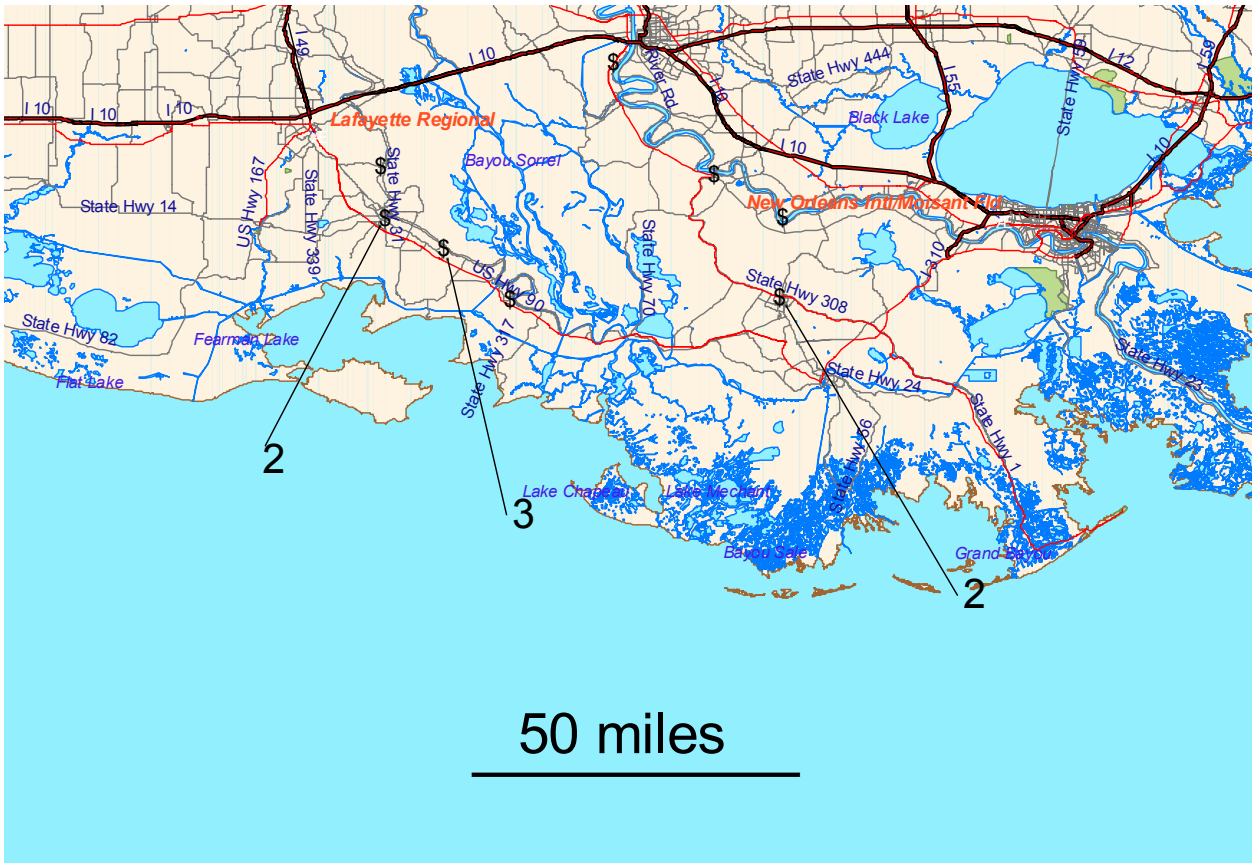

Figure 14. Geographic location of 12 of the 18 sugar factories in Louisiana [18,19]. Labels indicate the number of facilities located in close proximity to the point. Scale: 1 cm = 18.5 km.

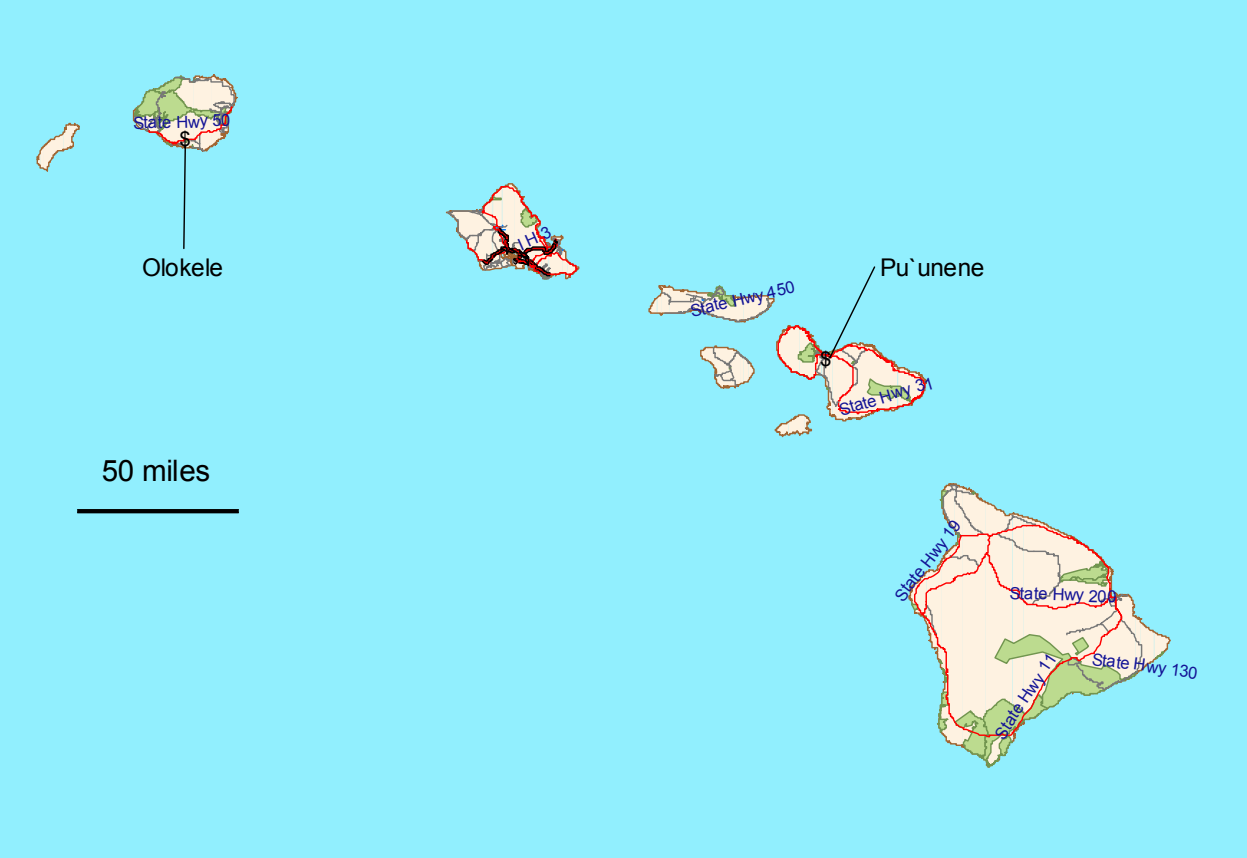

Figure 15. Geographic location of sugar factories in Hawaii [18,19]. Scale: 1 cm = 37.5 km.

Although bagasse is generated in large quantities from sugar milling operations, its availability for use as a feedstock for hydrogen production depends on establishing biomass derived hydrogen (BDH) as an economically competitive product. The economics must allow BDH to be sold competitively in the hydrogen market, and BDH must provide an adequate profit margin to permit the purchase of bagasse at an attractive price that is competitive with its alternate uses. The most immediate use for bagasse is as fuel in combustion steam generators that provide motive power, electricity, and heat to the sugar factory. In cases where the regulatory environment and tariff structure permit, bagasse may be used to generate electricity (in excess of the factory's needs) that can be sold to the utility grid. Bagasse is also used as a feedstock for paper and fiberboard production. Satisfaction of the demand for captive power at the sugar factory is by far the largest single use of bagasse in the industry. Availability of bagasse for BDH production is thus linked to the steam use practices in the factory.

An index of factory steam use intensity is the mass of steam required to process a tonne of sugarcane. Common values in the industry range from 400 to 500 kg steam per tonne of cane. The higher end of the range would be representative of factories in much of the world, equipped with medium pressure boilers and quadruple effect evaporators, whereas the lower end of the range would be representative of factories that have high pressure boilers and quintuple effect evaporators and have undertaken steam conservation measures. Paturau [20] estimates that a factory operating in this range would generate 13 to 21% excess bagasse after satisfying factory demands. P.V. Shirgaokar, executive director of the Ugar Sugar Works, Ltd. in the state of

Maharashtra, India, estimates that excess bagasse in a typical Indian factory ranges from 3 to 10% of the total produced with an average of 5% [16]. A recent Asian Development Bank study of the sugar industry in the PRC reports that 520 kg of steam were required for each tonne of cane processed in nine factories surveyed in Guang Dong and Guang Xi provinces [21]. The reported average steam requirements for sugar processing in the Hawaii sugar industry of the 1980's (considered to be a model for factory steam economy and power generation from bagassse) was ~420 kg steam per tonne of sugarcane [22]. Considering material losses and periods of factory upset and the levels of steam conservation practiced in the factory, a conservative estimate of 15% excess bagasse fiber available for hydrogen production will be adopted for the remainder of this assessment.

2.2 Nut Shells

World production of major nut crops in 2001 are summarized in Table 9 [2]. Included in the table are values for whole nut (meat or kernel plus shell) production of almonds, Brazil nuts, cashews, chestnuts, hazelnuts or filberts, pistachios, and walnuts. Ratios for the weight of shell to the weight of the whole nut are also included for each nut types [23,24]. These ratios were used to calculate shell production values. Total world shell production from Table 9 is roughly 3 million tonnes, although some percentage of nuts are sold to the consumer in-shell and thus some shells are not available for use as feedstock. In the case of pistachios, it is estimated that 90% of production is sold in-shell.

India produces more than one third of the world cashew nut crop and ~350,000 tonnes of shell annually or about 1000 tonnes daily [2]. Major cashew producing states are Kerala, Karnataka, Tamilnadu, Andhra Pradesh, Goa, Maharashtra, and Orrisa. Oil is pressed from the shell and the resulting nut shell cake material is used as fuel [25]. Cashew nut shell cake is sold for 1,200 Rupees or ~$24.50 per tonne (49 Rupee = $1). Nearly all processing of the cashews is done at small scale facilities by labor intensive methods. Thus the cashew nut shell resource though relatively large is dispersed over a wide region and not amenable for hydrogen production at the chemical plant scale.

Turkey produces more than 70% of the world hazelnut crop, roughly 630,000 tonnes annually [2] with a potential shell resource of ~315,000 tonnes. Hazelnut production is located in Turkey's coastal region along the Black Sea in the provinces of Ordu, Giresu, Trabzon, Rize, Artvin, Samsun, Sinop, Kastamonu, Bolu, Sakarya, Zongudak, and Kocaeli [26]. Little information was found on the hazelnut processing industry or the current uses for the hazelnut shell in Turkey, but the size of the resource located in a single country warrants further investigation.

The U.S. is a leading producer of both walnuts and almonds and California is responsible for 99% of the U.S. production of both crops. With production concentrated in one state, albeit a large one, opportunities for hydrogen production from these two agricultural commodities merit study. The remainder of the discussion presented below is focused on these two nut crops.

Table 9. World production of whole nuts and shells for 2001 [2].

Nut Type	Whole Nut Production (tonne)	Shell to Whole Nut Ratio	Shells (tonne)
Almond	1,326,131	0.45[1]	596,759
Brazil Nut	68,755	0.45[2]	30,940
Cashew	1,470,433	0.75[2]	1,102,825
Chestnut	970,310	0.20[1]	184,359
Hazelnut (a.k.a. Filberts)	875,375	0.50[2]	437,688
Pistachio	318,631	0.44[1]	143,384
Walnut	1,276,422	0.47[2]	599,918
Total	6,306,057		2,952,488

[1] whole nut refers to nut meat or kernel plus shell
[2] value from reference [24]
[3] value from reference [23]

2.2.1 Almonds

World production of almonds (in shell) was 1.33 million tonnes in 2001, slightly below the five year trailing average of 1.37 million tonnes [2]. As shown in Table 10, ten countries accounted for 85% of the world total, with the remaining 15% contributed from 45 smaller producers. The U.S. contributes 29% of the world total and U.S. almond production is exclusive to California. The U.S., Spain, and Italy combine to produce more than 55% of the world total. Production of the European Union member countries listed in Table 10, Spain, Italy, and Greece, combine for a share of world production equal to the U.S. The remaining countries in Table 10 are located throughout the Mediterranean region and the Middle East. Note that the yield of almonds in Spain, the second largest almond producer, is about 22% of the yields obtained in the U.S./California indicating that the almond shell resource in Spain would not only be smaller but also more dispersed. Due to the relatively low world production and the highly concentrated almond production in California, the remainder of the discussion on almonds will be focused on U.S. production.

Almond meat comes from the tree encased in a hard shell with an outer soft vegetative hull. Hulls are removed and sold as a dairy feed ingredient for $99 to $110 per tonne [27]. Almond shells comprise ~45% of the weight of the whole nut (shell and meat) for California Nonpareil varieties. Although recent data is not presently available, cultivars grown in Spain are reported to produce whole nuts that are comprised of 75% shell on average [24]. Properties of almond shells reported in the literature are shown in Table 11. Ash content of the shells ranges from 1 to 4%. The high potassium content of shells from California orchards have made their use in energy conversion facilities a challenge due to their propensity to agglomerate fluidized beds and create deposits on heat exchange surfaces of combustion facilities.

Almonds are typically harvested in the period, August 1 through the end of October. Hulling and shelling normally occur from September 1 through November 30. Although shells are generated in a relatively short, three-month window each year, the shells are usually stored on site and sold year round. Some shellers have erected buildings to store shells but most store them outdoors covered with tarps. Spontaneous ignition of almond shell piles has been reported. Almond shells are mainly used as feedstock for charcoal production, as the combustible material in formed, fireplace logs, and as bedding material in the dairy industry. Use of almond shells as a fuel in power generation applications is problematic, as mentioned above. Prices vary within a range of $12 to $27 per tonne according to demand. Shells are normally transported with trucks carrying ~18 tonne payloads [27].

Kern, Stanislaus, Fresno, Merced, and San Joaquin counties lead California in almond production [32]. According to the Almond Hullers & Processors Association [27], there are roughly 250 hulling/shelling operations in the state of California located in the Sacramento and San Joaquin valleys stretching from Chico to Bakersfield, a distance of roughly 600 km. The Almond Board of California [33] maintains a list of almond handlers, a subset of which shells almonds. Ninety-one shellers were identified from this source and their locations are shown on the map in Figure 16. Blue Diamond is a cooperative with membership that includes two-thirds of California's growers and handles about one-third of the almonds grown in California. It operates processing facilities in Sacramento and Salida, California [34]. The Salida facility received about 43,000 tonnes of in-shell almonds last year and roughly 25,000 tonnes were sold in-shell. The remaining 18,000 tonnes were processed at the Salida facility yielding about 8,000 tonnes of shell [35]. Salida is identified on the map in Figure 16 and is part of the Modesto metropolitan area, located in the almond producing region of Stanslaus, Merced, and San Joaquin counties. Three circles each with a radius of 40 km (25 mi) are shown on the map in Figure 16. The three circles, moving from the top of the map toward the bottom, contain 13, 40, and 15 almond shelling facilities within their perimeters, respectively. Although detailed information regarding the amounts of material generated at each individual processing facility was not readily available, the close proximity of the facilities would make aggregating shells possible. It is estimated that the total almond shell resource within the state is ~120,000 tonnes (70% of the total).

Table 10. Summary of major almond producing countries [2].

Country	Production (tonne)		% of World Production	Yield (tonne/ha)
	Whole Nut	Shell		
U.S.	385,550	173,498	29.1	1.82
Spain	257,000	115,650	19.4	0.39
Italy	105,000	47,250	7.9	1.19
Iran	87,000	39,150	6.6	0.92
Morocco	65,000	29,250	4.9	0.47
Tunisia	60,000	27,000	4.5	0.35
Syrian Arab Republic	49,487	22,269	3.7	
Greece	47,000	21,150	3.5	
Turkey	45,000	20,250	3.4	
Lebanon	35,000	15,750	2.6	

Table 11. Summary of fuel characteristics of almond shell from various sources.

Sample Origin	California[a]	California	Italy	Spain
Reference	[28]	[29]	[30]	[31]
Proximate Analysis (dry basis)				
Ash	4.81	3.29	1.26	2.6
Volatile	73.45	76	78.66	77.5
Fixed C	21.74	20.71		19.8
Higher Heating Value				
BTU/lb	8335	8378	9188	8683
MJ/kg	19.4	19.5	21.4	20.2
Ultimate Analysis				
C	44.98	49.3	50.65	
H	5.97	5.58	6.03	
N	1.16	0.76		
S	0.02	0.04		0
Ash	5.60	3.29		
O (by diff)	42.27	40.64	42.06	
Cl		<0.01		
Elemental Analysis of Ash				
SiO_2		8.71		7.1
Al_2O_3		2.72		2.3
TiO_2		0.09		
Fe_2O_3		2.3		2.7
CaO		10.5		25.2
MgO		3.19		4.7
Na_2O		1.6		0.4
K_2O		48.7		22.6
P_2O_5		4.46		
SO_3		0.88		
Cl				
CO_2		17.38		
MnO_2				

[a] Proximate and ultimate analyses performed by two different laboratories resulting in different ash contents

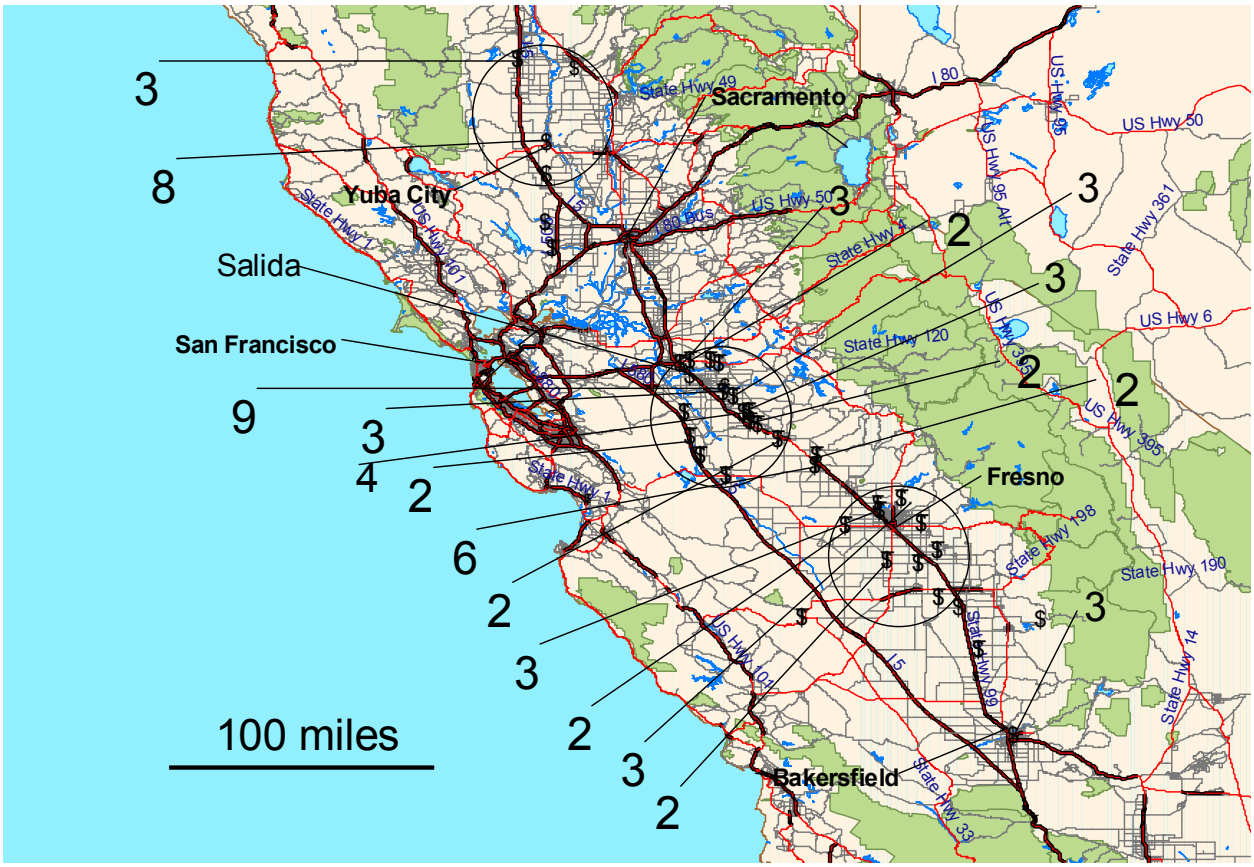

Figure 16. Location of 91 of California's almond shelling facilities, numbered points indicate several facilities located in close proximity [33, 19]. Scale: 1 cm = 46 km.

2.2.2 Walnuts

Global production of walnuts in 2001 was approximately 1.27 million tonnes, fractionally higher than the trailing five year average of 1.20 million tonnes [2]. As shown in Table 12, eight countries accounted for 78% of production with the remaining 22% spread among 43 smaller producers. China and the U.S. are world leaders, producing 26 and 20% of the world's walnut crop in 2001. Iran and Turkey each contribute an additional 10%. According to the United States Department of Agriculture's Foreign Agriculture Service [36], 75 to 80% of Chinese domestic walnut production is sold raw to individual consumers making small the likelihood of obtaining large quantities of shells at a central location. U.S. production, however, is located almost exclusively in California, with San Joaquin, Tulare, Stanislaus, Butte, and Sutter counties being the leading producers [32]. Due to the relatively low world production of walnuts and the highly concentrated production in California, the remainder of the discussion on walnuts will be focused on U.S. production.

Most walnuts orchards are machine harvested in California from mid-September through late November. The hull is removed and the nut is washed on the farm upon delivery from the field. Nuts are then dried in-shell to a prevent spoilage while in storage. Walnuts are sold in-shell or as shelled meats or kernels and about 30% of the California crop is marketed in-shell [37]. All nuts

are stored in-shell and shelling occurs as orders are received [38]. The temporal variation of shells being generated throughout the year due to fluctuation in demand for shelled product is shown in Figure 17 for the past 24 months [39]. Total shells generated annually for the July to June, 12 month period were about 70,000 tonnes in each of the two years. The period from January through June saw relatively level monthly shell production with an average of ~4500 tonnes. October was the month of peak shell generation with more than 10,000 tonnes produced.

Diamond Walnut, a cooperative of 1900 growers, handles half of the California walnut crop at its Stockton facility. Walnut shells produced at this facility are used primarily as boiler fuel in a cogeneration plant that supplies heat and power to Diamond's processing operations. Surplus power is sold to the grid. Walnut shells are also used as feedstock for charcoal manufacture and are powdered for use as abrasives, as sand-blast-type cleaners for jet engines, and as extenders in glue and gun powder production [38]. Diamond Walnut reports purchasing shells from other shellers in the area for ~$33/tonne [37]. Walnut shells are reported to vary from $22 to 44 per tonne depending on use and availability. Properties of walnut shells reported in the literature are shown in Table 13. Note that the material has low ash, sulfur, chlorine, and nitrogen contents and an energy content comparable to that of clean wood fuels.

Walnut processing facilities are located in California's central valley as shown on the map in Figure 18. Circles of 40 km radius (25 mi) on the map identify areas where large numbers of walnut shelling facilities are concentrated and these can be described as the Yuba City/Marysville area (Sutter County) in the north, the Stockton/Modesto area (Stanislaus and San Joaquin Counties) and the Fresno area (Fresno and Tulare Counties). Data on the actual quantities of shells generated at each of these facilities was not available, however recognizing that the total walnut shell resource in the state is ~70,000 tonnes per year and Diamond walnut controls and uses a significant fraction of that resource, sufficient quantities of walnut shells are not likely to be available to establish a hydrogen production facility that will attain economies of scale.

Table 12. Summary of major walnut production by countries [2].

Country	Production (tonne)		% of World	Yield
	Whole Nut	Shells	Production	(tonne/ha)
China	330,000	155,100	25.9	1.88
U.S.	254,010	119,385	19.9	3.20
Iran	138,000	64,860	10.8	2.65
Turkey	136,000	63,920	10.7	2.32
Ukraine	52,000	24,440	4.1	1.86
India	31,000	14,570	2.4	1.03
Romania	30,000	14,100	2.4	
France	28,000	13,160	2.2	2.06

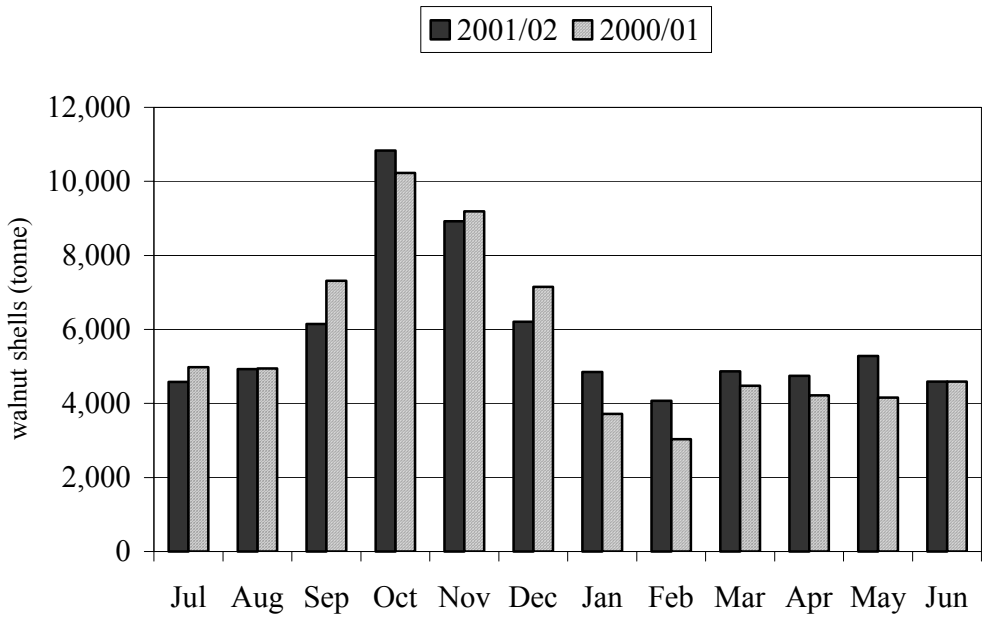

Figure 17. Monthly production of walnut shells in California for the past two years [39].

Table 13. Fuel characteristics of walnut shells [28].

Proximate Analysis (% dry basis)		Ultimate Analysis (% dry basis)	
Ash	0.56	C	49.98
Volatile	78.28	H	5.71
Fixed C	21.16	N	0.21
		S	0.01
Higher Heating Value (dry basis)		Ash	0.56
BTU/lb	8674	O (by diff)	43.35
MJ/kg	20.2	Cl	0.03

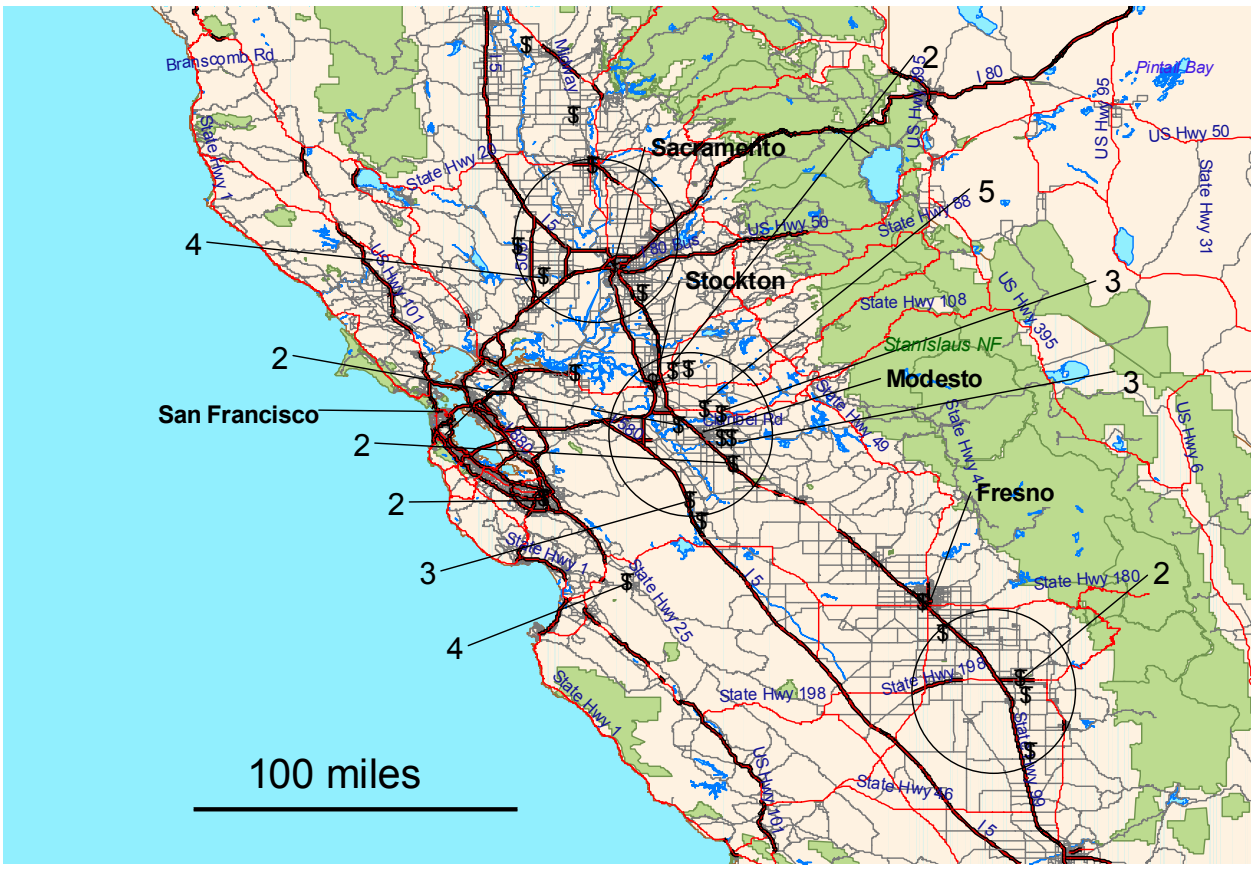

Figure 18. Locations of 44 of California's walnut shelling facilities, numbered points indicate several facilities located in close proximity [38,19]. Scale: 1 cm = 37 km

2.3 Switchgrass

Switchgrass is a warm season perennial species indigenous to the mid-western U.S. and the prairie provinces of Canada [40]. Its production is an important component of the U.S. Department of Energy's biofuels efforts and, as such, has been the subject of an integrated research and development program that has included genetic improvement, production, harvesting, and conversion. These efforts have led to large-scale plantings of switchgrass and its use as a fuel in two successful cofiring demonstration projects; the Chariton Valley Biomass Project in Iowa and a project headed by the Southern Research Institute (SRI) in Alabama. Further expansion of switchgrass acreage will depend on the development of stable markets for the crop. A hydrogen production facility utilizing switchgrass as feedstock would serve to expand markets beyond the power generation sector. Projections of delivered costs for switchgrass under various production, harvesting, and transportation scenarios have been made as part of the effort to move switchgrass beyond the demonstration phase. These will be summarized in the following sections in addition to the fuel characteristics that have been reported in the literature.

An economic modeling component of the SRI project estimated costs of switchgrass delivered to a conversion facility based on the unit operations required for production, harvesting, and transportation [41]. Table 14 summarizes the production, harvesting, transportation, and fuel preparation options included in the model. Production data were based on the experience gained from research test plots and the acreage in northern Alabama that supplied switchgrass for the project's cofiring tests. Under all scenarios reported, the lowest cost transportation and material preparation option was the large 13 tonne module made from compressed, chopped switchgrass and deconstructed at the end use facility using a module unloader, similar to those used in the cotton industry. Model results were reported for varying hauling distances (0 to 80 km), truck capacities (9 to 36 tonnes), switchgrass yield (4.5 to 31 tonnes ha^{-1}), and stand life (2 to 12 yr). Over the mid to upper range of these options, the delivered switchgrass costs varied from $42 to 50 $tonne^{-1}$.

Table 14. Summary of economic model options for the SRI project [41].

Crop Establishment	Harvesting	Transportation/Material Preparation
Previously Untilled Land	Forage Chopper	Truck bales, grind at facility
Previously Cropped Land	Mower and Round Baler	Truck chopped material in walking floor trailers
		Compress chopped material into 13 tonne modules for transport, deconstruct at facility
		Pelletize chopped material, transport w/ walking floor trailers

The Bioenergy Feedstock Development Program at the Oak Ridge National Laboratory (ORNL) has conducted a national assessment of land that could be used for the production of switchgrass and other energy crops [42]. Its assessment was based, in part, on the results of the Oak Ridge Integrated Bioenergy Analysis System (ORIBAS), a GIS-based modeling system that estimates delivered switchgrass price and availability within a state based on analysis performed on a 1 km^2 grid resolution. The model determines the optimal (least cost) locations for switchgrass conversion facilities based on the farmgate price of switchgrass, the crop's spatial distribution, transportation costs, and the conversion facility's feedstock requirements. The switchgrass production cycle (time between replantings) was assumed to be 10 years and the production costs were based on baling and roadsiding the crop. The land area considered available for switchgrass production was equal to the area planted to the conventional crop most prevalently planted in each county at the time of the analysis. Two sizes of facilities were considered; (1) a smaller facility (100,000 tonnes yr^{-1}) with a fuel requirement equal to that of a 13 MW combustion/steam power plant (20% efficiency, 330 operating days per year, 19 MJ kg^{-1} switchgrass) and (2) a larger facility (635,000 tonnes yr^{-1}) of the size projected for a commercial cellulose-to-ethanol plant. Analyses for facilities of each size were done independently, i.e., the model performed assessments of the smaller or larger facilities but not a mixture of the two sizes. Least-cost facilities were located sequentially and the land area committed to each successive facility was taken out of consideration when locating the next, least-cost facility. Note that the

model does not take into account the interactions between prices of the conventional crops currently grown and switchgrass as land area moves into switchgrass production.

The Bioenergy Feedstock Development Program at the Oak Ridge National Laboratory conducted an ORIBAS analysis [42] for 11 states representing the Appalachian region (Tennessee), the Cornbelt (Iowa, Missouri), the Lake States (Minnesota), the Northern Plains (Nebraska, North Dakota, South Dakota), and the Southeast (Alabama, Florida, Georgia). The assessment reported results for half of the facilities located in each state, those that received feedstock at the lowest delivered cost. Table 15 summarizes the results including the number of facilities for each state and the range of delivered feedstock costs. With the exception of Iowa, Nebraska, and Florida, the lowest delivered feedstock cost for each state (i.e. the first plant) at the 100,000 tonne per day size was in the range, $27 to 30 per tonne. The reported switchgrass cost ranges for all 100,000 tonne per day facilities in Tennessee, North and South Dakota, Alabama, Florida, Georgia, and South Carolina fell below $37 per tonne. Cost ranges for Missouri and Minnesota were below $46 per tonne. Iowa and Nebraska both had higher predicted costs, in the range of $42 to $54 per tonne.

The number of 635,000 tonne per day facilities determined for each state by ORIBAS was roughly equal to the number of 100,000 tonne per day facilities divided by 6.35. Delivered switchgrass costs for the larger facilites followed much the same pattern as the smaller facilities but with a $2 to 6 per tonne increase over the smaller plants. To provide some insight into the factors affecting delivered costs for the two facility sizes, in the case of Georgia, it was noted that transportation costs were ~$6 per dry tonne for the smaller facilities and ~$8 per dry tonne for the large facilities.

Fuel characteristics of switchgrass reported in the literature are summarized in Table 16. The analyses include results for switchgrass grown in Minnesota, Ohio, Iowa, and Alabama, and these data span most of the geographic region where potential switchgrass conversion facilities may be sited.

Table 15. Summary of supply potential and feedstock costs for switchgrass in 11 states [42].

Facility Size	100,000 tonne yr^{-1}		635,000 tonne yr^{-1}	
State	No. of Facilities	Delivered Cost ($ $tonne^{-1}$)	No. of Facilities	Delivered Cost ($ $tonne^{-1}$)
Tennessee	52	29 – 35	8	33 – 38
Iowa	319	42 – 52	50	46 – 54
Missouri	135	29 – 43	19	35 – 47
Minnesota	188	30 – 46	28	34 – 49
Nebraska	139	42 – 54	22	46 – 58
North Dakota	153	28 – 31	24	30 – 34
South Dakota	74	27 – 31	11	31 – 34
Alabama	29	28 – 32	3	31 – 36
Florida	3	35 – 37	0	
Georgia	30	30 – 35	4	35 – 38
South Carolina	15	29 – 33	2	34 - 36

Table 16. Summary of fuel characteristics of switchgrass from various sources (continued on following page).

		Proximate Analysis				Higher Heating Value			Ultimate Analysis							
Sample Origin, if known		Ash	Volatile	Fixed C		BTU/lb	MJ/kg		C	H	N	S	Ash	O*	Cl	Ref.
Summer-MM, MN		2.69	82.94	14.37		7979	18.6		47.51	5.8	0.36	0.04	2.69	43.6	0.01	[29]
Dakota Leaf, MN		3.61	81.36	15.03		8014	18.6		47.45	5.75	0.74	0.08	3.61	42.37	0.03	[29]
Columbus, OH		8.97	76.69	14.34		7766	18.1		46.68	5.82	0.77	0.19	8.97	37.57	0.19	[29]
Chariton Valley, IA, debaler, Ottumwa cofiring tests		3.91	79.73	16.36		8128	18.9		47.31	5.87	0.35	0.05	3.91	42.51	0.17	[43]
Chariton Valley, IA, debaler, Ottumwa cofiring tests		4.99	79.17	15.84		8124	18.9		49.95	4.84	0.73	0.13	4.99	39.36	0.24	[43]
Chariton Valley, IA, debaler, Ottumwa cofiring tests		7.13	77.95	14.92		7775	18.1		48.11	4.77	0.58	0.16	7.13	39.25	0.05	[43]
Chariton Valley, IA, debaler, Ottumwa cofiring tests		6.75	78.52	14.73		7832	18.2		48.26	4.76	0.59	0.14	6.75	39.5	0.11	[43]
Gadsden, AL Tests, mechanical harvest		6.58	76.3	17.12		8105	18.9		44.81	5.84	1.02	0.22	6.58	41.54		[41]
Auburn U., AL, manual harvest,		4.31	89.77	5.92		8145	18.9		47.80	5.63	0.87	0.11	4.31	41.28		[41]
Gadsden, AL Tests		3.43	78.47	18.10		8263	19.2		49.44	6.50	0.72	0.10	3.43	39.81		[44]

* oxygen concentration calculated by difference, i.e. 100% minus the sum of C, H, N, S, and Ash.

Table 16 (cont'd). Summary of fuel characteristics of switchgrass from various sources.

		Ash Composition													
Sample Origin, if known		SiO_2	Al_2O_3	TiO_2	Fe_2O_3	CaO	MgO	Na_2O	K_2O	P_2O_5	SO_3	Cl	CO_2	MnO_2	Ref.
Summer-MM, MN		61.64	1.32	0.19	1.08	11.11	4.86	0.64	8.24	3.09	0.8				[29]
Dakota Leaf, MN		61.23	0.57	0.37	0.79	12.06	5.42	0.43	7.63	3.56	1.11				[29]
Columbus, OH		65.18	4.51	0.24	2.03	5.6	3	0.58	11.6	4.5	0.44				[29]
Chariton Valley, IA, debaler, Ottumwa cofiring tests		58.52	0.32	0.55	0.39	9.23	4.46	0.57	14.3	6.53	1.57	0.17	0.35		[43]
Chariton Valley, IA, debaler, Ottumwa cofiring tests		52.24	0.83	<0.01	0.46	10.7	5.21	0.57	16.9	5.94	2.46	2.49	1.64	0.14	[43]
Chariton Valley, IA, debaler, Ottumwa cofiring tests		61.2	0.3	0.11	0.34	7.74	4.48	0.64	12.2	6.87	2.7	0.5	2.1		[43]
Chariton Valley, IA, debaler, Ottumwa cofiring tests		58.1	1.34	0.11	0.4	8.73	4.42	0.41	12.1	6.9	2.9	0.55	2.63		[43]
Gadsden, AL Tests, mechanical harvest		62.71	8.39	0.53	5.82	4.62	3.65	0.59	1.95	2.73	2.28				[41]
Auburn U., AL, manual harvest,		48.56	1.08	0.07	0.34	12.77	20.41	2.38	2.92	5.89	3.83			0.14	[41]
Gadsden, AL Tests		not available													[44]

3. Estimated Plant Sizes.

Based on the discussion on feedstock availabilities in the previous section, appropriate plant sizes for a hydrogen production facility using the different biomass feedstocks may be estimated. Plant size should be determined with the objective of minimizing the cost of hydrogen product, and this requires detailed delivered feedstock cost data in addition to capital, operating, and maintenance cost information for the hydrogen production plant. An earlier study of hydrogen production [45] via biomass gasification was done using plant sizes of 300, 1000 and 1500 tonne biomass per day. The 300 tonne per day plant is equivalent to the 100,000 tonne per year plant (13 MW steam power plant with 20% efficiency, 330 operating days per year, 19 MJ kg^{-1} biomass) that was identified in the ORIBAS analysis of delivered costs for switchgrass.

3.1 Sugarcane Fiber

The availability of fiber for hydrogen production from sugarcane processing in the four countries identified earlier, the PRC, India, Brazil, and the U.S., was shown in Table 3. A summary of calculations for determining appropriate sizes for hydrogen production facilities utilizing sugarcane fiber is presented in Table 17. A single factory size was chosen for the PRC and India since they have a relatively homogeneous, standardized industry. In Brazil and the U.S., very different factory sizes are evident for different parts of the country, Sao Paulo and Alagoas provinces for Brazil and Florida and Louisiana for the U.S., and both of these were included in Table 17. An initial calculation was performed to determine the total amount of bagasse fiber available per year based on the average sugar factory milling capacity, the number of days of factory operation per year, the availability of the factory (the number of milling hours divide by the number of hours in the milling season), the amount of fiber in sugarcane, and the amount of excess bagasse available for hydrogen production after the steam requirements of the factory were satisfied. Because the sugar factories do not operate year round, the excess fiber would have to be stored for use in the hydrogen facility during the sugar factory off-season. It was assumed that the hydrogen facility would operate ~90% of the time or 330 days per year and this value was used with the fiber availability data to calculate the daily available bagasse fiber for hydrogen production from the average sugar factory in each of the four countries. Four management strategies (Cases 1 – 4 in Table 17) were explored to investigate the size of fiber resources that could be available for a hydrogen production facility.

Fiber availability from the average sugar factory for the unit sizes shown in Table 17 are relatively small, ranging from 14 tonne day^{-1} in the PRC to 136 tonne day^{-1} in Florida (Case 1). Average factories in Sao Paulo State could be expected to produce about 100 tonnes of excess bagasse fiber per day. In an effort to increase the amount of available fiber for hydrogen production, calculations were performed to evaluate consolidating bagasse from several factories to a central location in the cane-producing region. The maps of Uttar Pradesh and Maharashtra states in India, Sao Paulo and Alagoas states in Brazil, and Louisiana and Florida in the U.S. were visually inspected to arrive at a representative number of average sugar processing facilities that could be consolidated within a circle of 80 km (50 mile) diameter. The number of factories from this exercise for each state/country is listed in Table 17 (Case 2). Since no geographic data was available for China and because the scale of sugar operations and sugarcane yield data in

China are similar to those of India, the number of facilities available for consolidation in India was assumed for China as well. Thus seven factories were assumed to be consolidated in India and China, seven in Alagoas and Sao Paulo states, six for Louisiana, and five in Florida. Base on these values and the average excess bagasse available at each facility, the total amount of bagasse that could be consolidated at a central facility for hydrogen production was determined. The results are provided in Table 17 as Case 2. China, India, and Louisiana remain below 250 tonnes per day, although it should be noted that not all of the sugar factories in Louisiana were located on the map and perhaps additional factories could be added to increase total fiber availability. With consolidation of excess bagasse from nearby mills, hydrogen production facilities located in Alagoas, Sao Paulo, and Florida could expect to access bagasse fiber resources of 450, 675, and 675 tonnes day^{-1}, respectively. These values bound an intermediate value of ~500 tonnes day^{-1}, roughly the amount of dry biomass required to operate a 20 MW steam power plant operating at 90% availability, 20% efficiency, and with biomass having a higher heating value of 19 MJ kg^{-1}.

Larger biomass resources can be attained in the sugar industry by collecting sugarcane trash that is normally disposed of in the field. Assuming the 85% of the cane trash can be collected [46], brought to the factory, and combined with the excess bagasse from sugar milling operations (Case 3), the daily fiber availability for the hydrogen facility from a single sugar factory would range from 91 to 906 tonnes day^{-1} for the average factories in Table 17. Thus the cane trash and excess bagasse resource from a single mill is approximately equal to that obtained by consolidating excess bagasse from several factories in Case 2. The exception to this is Florida, where the longer grinding seasons and larger factory sizes increase the daily fiber availability in Case 3 by 227 tonnes day^{-1} over Case 2.

Case 4 is a combination of Cases 2 and 3; cane trash is collected for each factory and the cane trash and excess bagasse fiber resources from several factories are consolidated at a central location in the sugar producing region. Under this scenario, fiber availability is greatly increased in all locations. Hydrogen production facilities in China and India would expect to have ~750 and 1000 tonnes of fiber available per day, respectively. The fiber resources in the remaining locations would all be in excess of 1000 tonnes day^{-1}, with Louisiana, Alagoas, Sao Paulo, and Florida totaling 1900, 3500, 5200, and 5200 tonnes day^{-1}, respectively.

Based on the analysis presented above, standard hydrogen production facility unit sizes for the sugarcane processing industry should be investigated at the 500, 1000, 2000, and 4000 tonne day^{-1} scale.

Table 17. Summary of hydrogen production facility size calculations for sugarcane fiber.

			Brazil		U.S.	
	China	India	Sao Paulo	Alagoas	Louisiana	Florida
Average sugar factory size (tonne/day)	2,000	2,300	10,434	7,053	8,540	18,141
Average milling days per year	148[1]	180[2]	200[3]	200[3]	100[4]	156[4]
Availability (%) (100 x hours milling/hours of season)	85[1]	85[2]	85[3]	85[3]	87[4]	88[4]
Fiber % of cane (assumed value)	12	12	12	12	12	12
Fiber in excess of factory demand (%) (assumed value)	15	15	15	15	15	15
Total annual excess bagasse fiber (tonne)	4,529	6,334	31,928	21,582	13,374	4,4827
H2 facility operating days per year	330	330	330	330	330	330
Case 1						
Daily availability w/ bagasse fiber storage (tonne/day)	14	19	97	65	41	136
Case 2						
Number of sugar factories for excess bagasse fiber consolidation	7	7	7	7	6	5
Daily availability w/ bagasse fiber consolidated and stored (tonne)	96	134	677	458	243	679
Case 3						
Total annual cane trash fiber (tonne)	30,192	42,228	212,854	143,881	89,158	298,848
Daily availability w/ cane trash fiber plus excess bagasse fiber from single mill w/ storage (tonne/day)	91	128	645	436	270	906
Case 4						
Daily availability w/ cane trash fiber and bagasse fiber consolidated and stored (tonne/day)	737	1,030	5,192	3,510	1,864	5,207

[1] Reference [21]
[2] Reference [16]
[3] Reference [47]
[4] Reference [18]

3.2 Nut Shells

The combined almond and walnut shell resources in California total roughly 200,000 tonnes per year. Within the limitations of the available information, the greatest number of nut processing facilities appear to be in the Modesto area and this would appear to be a logical location to site a hydrogen production facility. The quantity of shell that could be consolidated at this central location for hydrogen production could be on the order of 100,000 tonnes due to the present demand for the shells and transportation limitation. Utilizing a fuel stream containing a high percentage of almond shells could present operating difficulties, such as bed agglomeration, in a fluidized bed gasifier due to the high alkali content of the fuel. One method of reducing the almond shell fraction of the fuel supply and increasing the size of the facility would be to acquire other non-shell, low-alkali, feedstock supplies that could be blended with the nut shells. Clean

biomass fuel supplies such as prunings, stumps, and culled trees from almond orchards could be acquired for this purpose. Under this scenario, the plant size could be increased from 300 tonne per day (100,000 tonne per year facility) to 500 tonne per day.

3.3 Switchgrass

Detailed projections of delivered costs for switchgrass supplied to facilities requiring 100,000 or 635,000 tonne per year have shown that the number of possible facilities is inversely proportional to the size of the facility. For the lowest cost feedstock (the first plant) at each of the two scales, the delivered cost at the larger facility increased by $2 to $6 per tonne compared to the smaller facility. This range applies to all of the states where analysis was performed. Assuming that the delivered price scales linearly within this price differential, a facility size could be selected in the 100,000 to 635,000 tonnes per year range that would produce the lowest cost hydrogen. Assuming that switchgrass would be a dedicated feedstock for the hydrogen plant, the size of the facility is not constrained by being co-located with primary processing facilities as in the case of sugar or nutshells. For switchgrass, the hydrogen production facility would be the primary processing facility and therefore the only constraint would be delivered feedstock cost, assuming that switchgrass production will rise to fill demand at a given price. The 100,000 and 635,000 tonne per year ranges translate to 300 and 1,925 tonne per day rates based on 330 operating days per year. Based on this size range, plant sizes of 500, 1000, and 2000 tonnes per day should be given detailed study.

4. Summary and Conclusions

Sugarcane fiber in the PRC, India, Brazil and the U.S., almond and walnut shells in California, and switchgrass in the U.S., were considered as possible feedstock supplies for hydrogen production facilities. Information regarding the sizes and geographic locations of processing facilities and feedstock costs were determined for each of the potential feedstocks. Based on available information, possible sizes of hydrogen processing facilities were proposed for each of the feedstocks although the optimal facility size will ultimately be determined by the total production cost for hydrogen.

Average size sugar factories in the PRC, India, Louisiana, Florida, and the Brazilian states of Alagoas and Sao Paulo were determined to be 2000, 2300, 8540, 18140, 7050, and 10400 tonnes cane per day, respectively. Assuming that 85% of the fiber generated at the sugar factory was required to satisfy its own internal power demand and knowing the average number of operating hours per year, annual excess bagasse available from each facility size was determined. Assuming that a hydrogen production facility would operate for 330 days per year, the daily supply of excess bagasse was determined assuming that excess bagasse generated by the sugar factory could be stored for levelized distribution throughout the year. Under this strategy, the largest average facility (Florida) could supply 136 tonnes of feedstock per day.

Consolidated excess bagasse from neighboring facilities could be expected to increase the available feedstock supply from 136 to 680 tonnes per day at the average Florida facility. Feedstock consolidated from smaller factories typical of India and China could be expected to support a facility of ~100 tonnes per day. Fiber consolidation of excess bagasse in Louisiana,

Alagoas, Sao Pauolo, and Florida would provide feedstock supplies of ~150, 500, 700, and 700 tonnes per day, respectively. The delivered cost of excess bagasse fiber in India was reported to be ~$29 per tonne with about one-third of the total cost due to transportation fees. Excess bagasse fiber in Hawaii has been sold, delivered to the purchaser, for ~$32 to 40 per tonne with about half of the price due to transportation costs.

Collection of cane trash fiber was considered as an additional step that could be undertaken to generate larger feedstock supplies. Under the assumption that 85% of the cane trash could be collected from the fields supplying a single factory and combined with the factory's excess bagasse, the available feedstock supply was approximately equal to the supply generated by the strategy of consolidating excess bagasse from several factories. Florida was the only exception, increasing from 680 tonnes per day to 906 tonnes per day.

Combining the strategies of collecting cane trash and consolidating the fiber from several factories yielded the largest possible feedstock availabilities for all locales. Under this scenario, the feedstock available from sugarcane fiber (bagasse and cane trash) in the PRC, India, Sao Paulo, Alagoas, Louisiana, and Florida was 750, 1000, 5200, 3500, 1900, and 5200 tonnes per day, respectively. These quantities of feedstock would be generated in excess of the fiber required by the sugar factories to satisfy internal power requirements.

Nutshells were also evaluated as a possible feedstock for hydrogen production and California's almond and walnut industries have two of the largest nut crops in the world. Their geographic concentration in the central valley of California provides opportunities for consolidating supplies particularly near the town of Modesto. The available combined almond and walnut shell resource in the state totals ~200,000 tonnes but the entire amount would not be accessible due to currently established uses for the materials. Prices for almond and walnut shells range from $12 to 27 $tonne^{-1}$ and $22 to 44 $tonne^{-1}$, respectively. Almond shells are available in larger supplies than walnuts shells but have relatively high potassium content and would likely cause operating difficulties in fluidized bed gasifier facilities. To ameliorate this problem and increase the size of the hydrogen production facility, clean biomass fuel supplies such as prunings, stumps, and culled trees from almond orchards should be acquired and blended with the shells. Using this strategy, a hydrogen production facility size of 500 tonnes per day could be supported. Assumptions outlined for this strategy should be verified with more detailed analysis.

Delivered costs of switchgrass from dedicated feedstock supply systems were projected for 11 states in the U.S. and ranged from $27 to 42 per tonne for facility sizes of 100,000 tonnes per year (300 tonnes per day). These cost figures were for the first facility in each of the states that were located to have access to the lowest cost feedstock. Subsequent plants would face incrementally higher feedstock costs. Similar analysis for facilities of 635,000 tonnes per year (1900 tonnes per day) projected costs of $30 to 46 per tonne. Based on these analyses, the feedstock prices appear to vary linearly between the two facility scales. Since switchgrass would be supplied as a dedicated feedstock for a hydrogen production facility the scale of the factory can be readily chosen based on a scale that produces the minimum-cost hydrogen. Unit scales of 500, 1000, and 2000 tonnes per day should be used for initial plant design calculations.

Based on the assembled information on feedstock availability from sugarcane fiber, nut shells, and switchgrass, initial scales for hydrogen production facilities can be selected for design calculations. For sugar cane fiber, initial design calculations should be done at the 500, 1000, 2000, and 4000 tonne per day scales. For nut shells, initial design calculations should be conducted at a scale of 500 tonnes per day with a fuel mix consisting of 20% walnut shell, 40% almond shell, and 40% clean wood fuel. For switch grass, initial design calculations should be performed using scales of 500, 1000, and 2000 tonnes per day.

5. References

[1] Turn, S.Q., Kinoshita, Z. Zhang, D. Ishimura, and J. Zhou. 1998. An experimental investigation of hydrogen production from biomass gasification. *International Journal of Hydrogen Energy*. 23(8) pp 641-648.

[2] Anon. 2002. FAO Statistical Databases. (http://apps.fao.org) Food and Agriculture Organization of the United Nations.

[3] Turn, S.Q., C.M. Kinoshita, D.M. Ishimura. 1997. Removal of inorganic constituents of biomass feedstocks by mechanical dewatering and leaching. *Biomass and Bioenergy*. 12(4) pp. 241-252.

[4] Turn, S.Q., C.M. Kinoshita, D.M. Ishimura. 1998. Unpublished data.

[5] Turn, S.Q. 2002. Unpublished data from the Hawaiian Commercial & Sugar Cofiring Tests.

[6] Gabra M. , A. Nordin, M. Ohman, and B. Kjellstrom. 2001. Alkali retention/separation during bagasse gasification: a comparison between a fluidized bed and a cyclone gasifier. *Biomass and Bioenergy* 21, pp. 461-476.

[7] Jorapur R. and A. K. Rajnanshi. 1997. Sugarcane leaf-bagasse gasifiers for industrial heating applications. *Biomass and Energy* 13 pp. 141-146.

[8] Garcia-Perez M., A. Chaala, J. Yang, and C. Roy. 2001. Co-pyrolysis of sugarcane bagasse with petroleum residue. Part 1: Thermogravimetric analysis. *Fuel* 80 pp. 1245-1258.

[9] Suarez, J.A., C. A. Luengo, F. F. Felfli, G. Bezzon and P. A. Beaton. 2000. Thermochemical Properties of Cuban Biomass. *Energy Sources*, 22 pp. 851-857.

[10] Natarajan, E., M. Ohman, M. Gabra, A. Nordini, and T. Liliedahl. 1998. Experimental determination of bed agglomeration tendencies of some common agricultural residues in fluidized bed combustion and gasification. *Biomass and Energy* 15, pp. 163-169.

[11] Turn, S.Q., C.M. Kinoshita, D.M. Ishimura, and J. Zhou. 1998. The fate of inorganic constituents of biomass in fluidized bed gasification. *Fuel*, 77(3), pp. 135-146.

[12] Turn, S.Q., D.M. Ishimura, C.M. Kinoshita, and S. Masutani. 1996. Summary, biomass gasifier facility start up tests -- November and December 1995. Hawaii Natural Energy Institute prepared for the Pacific International Center for High Technology Research.

[13] Anon. 2000. World Sugar and Sweetener Yearbook 1999/2000. F.O. Lichts GmbH, Tunbridge Wells, UK, ISBN 3-9801139-0-6.

[14] Anon. 1999. Indian Sugar Year Book 1997-98-99, Indian Sugar Mills Association, New Delhi, India,

[15] Anon. 2002. Indian Sugar Millers Association. (http://www.indiasugar.com/sugarmap/index.htm)

[16] Shirgaokar, P.V., Executive Director, Ugar Sugar Works, Mahaveer Nagar, Sangli, Maharashtra. personal communication.

[17] Anon. 2001. Mapa Brazil de Unidades Produtoras de Acucar e Alcool – 2001. Grupo Jose Pessoa, San Paulo.

[18] Anon. 2000. 2000/01 Gillmore Sugar Manual: Louisiana, Florida, Hawaii, Texas, Puerto Rico, Sugar Publications, Fargo, ND.

[19] Anon. 1999. Arcview GIS 3.2. Environment Systems Research Institute, Inc., Redlands, CA.

[20] Paturau, J.M. 1989. By-products of the cane sugar industry; an introduction to their industrial utilization, 3rd edition. Elsevier. New York, NY.

[21] Anon. 2000. China Renewable Energy Development Project. Technical Assistance Report No. 3056-PRC. Asian Development Bank.

[22] Kinoshita, C.M. 2002. personal communication.

[23] Anon. 2002. FAO, Definition and classification of nuts and derived products, (http://www.fao.org/waicent/faoinfo/Economic/faodef/FDEF05E.HTM).

[24] Woodruff, J.G. 1979. Tree Nuts: Production, Processing, Products, 2nd Edition. AVI Publishing, Westport, CT.

[25] Kamath R., Bola Raghavendra Kamath & Sons. 2002. personal communication.

[26] Anon. 2002. Istanbul Hazelnut and Product Exporters Union. (http://www.ieuhazelnut.org)

[27] Beach, G. Almond Hullers and Shellers Association. 2002. personal communication

[28] Jenkins, B.M. 1993. Properties of Biomass, in Biomass Energy Fundamentals (TR-102107, Research Project 3295-01) prepared by Appel Consultants, Inc. for Electric Power Research Institute, Palo Alto, CA.

[29] Miles, T. R., T.R. Miles Jr., L.L. Baxter, R.W. Bryers, B.M. Jenkins, and L.L. Oden. 1995. Alkali deposits found in biomass power plants; a preliminary investigation of their extent and nature. NREL Subcontract TZ-2-11226-1, National Renewable Energy Laboratory, Golden, CO.

[30] Rapagna S., N.Jand, A.Kiennemann, and P.U.Foscolo. 2000. Steam-gasification of biomass in a fluidized-bed of olivine particle. *Biomass and Bioenergy* 19, pp. 187-197.

[31] Blesa, M.J., V. Fierro, J.L. Miranda, R. Moliner, J.M. Palacios. 2001. Effect of the pyrolysis process on the physicochemical and mechanical properties of smokeless fuel briquettes. *Fuel Processing Technology* 74. pp 1-17

[32] Anon. 2001. California Department of Food and Agriculture Resource Directory 2001. (http://www.cdfa.ca.gov/docs/ResourceDirectory01.pdf)

[33] Anon. 2002. Almond Board of California, Tel. (209)-549-8262 (www.almondsarein.org).

[34] Anon. 2002. Blue Diamond Growers. (http://www.bluediamond.com)

[35] Savidge, G., Blue Diamond Almond. 2002. personal communication.

[36] Anon. 2001. Walnut situation and outlook. World Horticultural Trade & U.S. Export Opportunities. (http://www.fas.usda.gov/htp/circular/2001/01-12/Stats/walnut.pdf)

[37] Lindsay, S. Diamond Walnut. 2002. personal communication.

[38] Lindsay, D. and T. Payne. Walnut Marketing Board. 2002. personal communication.

[39] Anon. 2002. California Walnut Board Monthly Management Reports. (http://www.walnut.org/prod.html)

[40] Taliaferro, C.M., K.P. Vogel, J.H. Bouton, S.B. McLaughlin, and G.A. Tuskan. 1999. Reproductive characteristics and breeding improvement potential of switchgrass, in R. Overend and E. Chornet (eds.) Proceedings of the Fourth Biomass Conference of the Americas, Biomass: A growth opportunity in green energy and value-added products. pp. 147-153.

[41] Bush, P.V., D.I. Bransby, H.A. Smith, and D. M. Boylan. 2001. Evaluation of switchgrass as a co-firing fuel in the southeast. Final Technical Report. DOE

Cooperative Agreement No. DE-FC36-98GO10349, EPRI WO# 4603-05. Southern Research Institute.

[42] Graham, R.L. and M.E. Walsh. 1999. A national assessment of promising areas for switchgrass, hybrid poplar, or willow energy crop production. Oak Ridge National Laboratory, ORNL-6944.

[43] Amos, W. National Renewable Energy Laboratory. 2002. personal communication; data from the Chariton Valley Biomass Project cofiring tests.

[44] Boylan, D., B. Zemo, and J, Eastis. 2001. Switchgrass Co-firing at Alabama Power Company's Plant Gadsden. Final Report, Southern Company

[45] Spath, P.L., J.M. Lane, M.K. Mann, and W.A. Amos. Update of hydrogen from biomass – determination of the delivered cost of hydrogen. Milestone Report for the U.S.D.O.E. Hydrogen Program. National Renewable Energy Laboratory, Golden, CO.

[46] Anon. 1999. Biomass power generation, sugar cane bagasse and trash. Newsletter of the Centro De Tecnologia Copersucar, Project BRA/96/G31. Piracicaba, Brazil. April, 1999.

[47] Leal, R. Centro de Techologia Copersucar. 2002. personal communication.

Appendix B – Identification / Evaluation of Solids Handling Systems

Identification/Evaluation of Solids Handling Systems

1. Introduction

Pressurized feeding of biomass fuels into fluidized bed gasifiers is an essential unit operation in biomass conversion to hydrogen. A wide variety of designs for feeding biomass-type feedstocks to pressurized reactors have been developed over the past 50 years. Initially, many of these designs were developed in conjunction with the advent of commercial-scale continuous processes in the pulp and paper industries. Additionally, high-pressure options for biomass thermal conversions processes such as pyrolysis and gasification were developed that required continuous solids feeding equipment. Some designs were adapted from coal feeders used in pressurized combustion and gasification processes, but were not directly applicable to biomass feedstocks because of biomass low bulk density and increased resistance to flow. Generally, there are three basic categories of biomass feeding equipment that could be considered for high-pressure biomass gasification. They are rotary valve feeders, lock hopper feed systems, and plug feed systems. The plug feed system comes in different vendor designs, represented by one or more manufacturer.

The successful application of biomass conversion processes to hydrogen requires gasifiers operating at high pressures. For economic reasons, biomass-to-hydrogen conversion processes require operating the gasifiers at pressures higher than 12 bars and preferably in the range of 35-70 bars. Therefore, biomass feed systems must be capable to feed the biomass against this pressure.

The resource assessment study has identified three candidate biomass materials that are available in sufficient quantities and in relatively high concentrations to be economically utilized. The three candidate materials are switchgrass, bagasse, and nutshells.

2. Resource Analysis and Preparation

The three selected fuels for this study are: switchgrass, bagasse, and nutshells. They represent a wide range of physical characteristics that influence the design of the feeding system. The variations in the feedstock bulk density, particle size, moisture content, and flowability are of particular importance for the feeder design. Based on the analyses of feedstock availability, location, and resources, reported earlier, it is recommended that each biomass-to-hydrogen plant operates with only one of the above mentioned feedstock. Therefore, evaluations of feed systems were conducted for each feedstock separately, with no attention to multiple feedstocks.

Switchgrass: This grass is a fibrous, herbaceous species that can be harvested annually and thrives with little attention. Its moisture content varies between 5.9 to 15% (by weight). The assessment study has indicated that the switchgrass production would be dedicated to a single plant and the scale of a hydrogen plant using switchgrass would not be tied to the size and geographic location of host processing facilities, as in the case of bagasse or nutshell feedstocks.

Bagasse: Bagasse, like switchgrass, is a fibrous material. It is a residue of sugar production and its use as a feedstock for gasification has been extensively studied. It contains about 50 % (by

weight) moisture and 50% fiber with small amounts of sucrose and soluble solids. Because of its high water content, drying the bagasse down to about 15 - 20% moisture, prior to feeding to the gasifier, is recommended.

Nutshells: Nutshells, residue from commercial nut processing, differs in quality as a fuel from bagasse and switchgrass. Shells are non-fibrous and have a higher density than bagasse and switchgrass. Thus, feedstock preparation must be different. Nutshells moisture content is less than 10 % (by weight). Almond shells have a relatively high alkali content and the potential to contribute to bed agglomeration in a fluidized bed gasifier. The assessment study has recommended that clean biomass fuels such as prunings or stumpage from the surrounding orchard lands be used to produce a wood/almond shells/walnut shells blend of 40/40/20 to reduce the deleterious effects of the almond shells and increase the available feedstock supply.

Table 1 presents physical property differences between the three biomass candidates. The wide ranges in bulk density, void volume, and increased resistance to flow make a common feeder and other equipment design ever more challenging.

Table 1. Feedstock Properties and Void Volumes

Feedstock	Type/Form	Bulk Density Kg/m^3	% Void Volume in a Bin
Switchgrass	Milled/Chopped to about 75 mm Chopped to about 25mm	50 - 80 80 - 110	50-70 50 -70
Bagasse	Dry – Packed; 1.5 to 2-mm dia, by 25 to 50-mm long 20 % Moisture; 1.5 to 2-mm dia, by 25 to 50-mm long	80-130 100-160	50-70 50 -70
Nutshells (40/40/20 wood/almond shells/walnut shells	Chopped to about less than 12 mm chips	350-500	40

3. Development Status of Biomass Feed Subsystem Technologies

3.1 Biomass Collection, Storage, and Preparation

Biomass must be collected, transported to a storage or preparation site, and prepared for gasification. Depending on the nature of the feedstock, this preparation may involve milling or chopping. The feedstocks chosen for this study are bagasse, switchgrass, and nutshells mixture of wood/almond nutshells/walnut nutshells of 40/40/20. These feedstocks do not require extensive pretreatment and are already consolidated at central locations. The extent of chopping or milling required for these feedstocks will depend on the performance parameters of the feed system, which are dependent on developments in progress. Current feed systems require size reduction

and removal of extraneous material such as irrigation tubing and rocks. The technology required for size reduction is generally available as adaptations of agricultural machinery.

Technologies for biomass collection and storage are similar to those used in agricultural operations. However, since these technologies have mainly been designed for high-value food crops rather than low-cost energy feedstocks, there may be opportunities for cost reductions in these areas. Storage of sufficient quantities of biomass fuel to maintain hydrogen plant production during mill outages may require special design features to minimize microbial degradation, which can affect the handling properties of the bio-fuels. In general, the technology for collection, storage, and preparation can be considered mature and commercially available.

3.2 Biomass Drying

Switchgrass, bagasse, and nutshells moisture levels are about 15%, 45%, and 8%, respectively. To produce high hydrogen to feed as a final product, only bagasse feedstock need to be dried. Standard commercial equipment is available for drying biomass, including rotary drum or fluidized dryers. For most agricultural bio-residues, e.g., bagasse, a rotary drum dryer is suitable and is relatively simple and inexpensive. Rotary drum dryers are commercially available from various vendors.

3.3 Pre-densification

The low bulk density of bagasse and switchgrass results in an increase in size of storage, preparation, and feeding equipment; thus increasing the capital cost. Also, the biodegradable nature of these feedstocks implies significant losses over time and difficulties in ensuring stable and predictable operation with stored fuel. Densification of these biomass fuels into a pellet form can substantially mitigate these drawbacks by reducing the storage and preparation equipment volume, and also by reducing the impact of biological degradation. Moreover, densification may be necessary to create highly controlled operation in the gasifier, thereby producing hydrogen more efficiently.

It has been reported[1] that pelletized bulk bagasse densities as high as 480 Kg/m^3were achieved, a 6-fold density improvement. This translates to a 6-fold size decrease of biomass feed and preparation equipment. It has been reported that the capital cost of a lockhopper biomass feeding system for a 150 MW IGCC thermal input is about 22% of the gasification section.[2] Adding the cost of the dryer, and inert gas generation system increases the capital cost to about 36% of the gasification section. Assuming 0.6 power factor for the cost associated with plant size ratio, then the capital cost of the entire gasification section, upon pelletizing, can be reduced by about 24%; a major cost savings. This saving, however, is offset by the high cost of direct pelletizing (for example, for a 200 tonne switchgrass per day the direct pelletizing cost is estimated at US $17.70 to $27.50) and a loss of about 11.8% of the original biomass energy stored in the switchgrass

[1] "Hawaiian Biomass Gasification Commercialization Project," Technology Verification Phase, Final Report, Contract Number DE-FC36-96GO10150. Submitted by Siemens Westinghouse, March 1999.

[2] "Multifuel Feeding Studies and Performance of Gasifier,", R. Ghazanfari; M. Liukkonen, K. Salo, and A. Horvath; Research funded by The European Commission under Joule-III – Clean Coal Technology, R&D Project under Contract No. JOF3-CT95-0018.

upon pelletizing[3]. Therefore, it can be concluded that the cost of palletizing may double the cost of switchgrass and bagasse feedstocks.

3.4 Feed Systems

A literature review was conducted to evaluate the design and development status of various biomass feed systems around the world. The literature review identified various feed systems and manufacturers. An earlier review was compiled in 1992 by VTT[4]. The report included the experience of biomass gasifiers and feeders of the past 20 years. In 1999, Carbona, Inc. of Finland evaluated multi-fuel feeding systems in a report to the European Union. The report concentrated on feed systems, that were either available commercially and/or in demonstration stage. The report concentrated on feed systems that are used to co-feed multi-fuels containing coal and other biomass fuels into pressurized gasifiers. Later in 1999, NREL conducted a workshop to address the industrial expertise in continuous biomass feeding equipment to pressurized reactor[5]. Other reports and manufacturers were also identified. The review revealed that two different biomass feed systems have been developed and tested: dry and wet feed systems. The dry feed systems include feeds with moisture content as high as 20%, and the wet (paste) feed systems include feeds as high as 75% moisture. Various dry feed systems identified are: rotary valves; lockhoppers with and/or without metering bin injector screw; plug feeders in various design forms including screw-type, screw-piston-type, piston-type, two-piston-type feeders, and pneumatic feeders. The identified wet feed systems is a paste-feeding-piston-type pump. The various feed systems are briefly reviewed in Table 2.

The survey of pressurized feeders currently available commercially yielded several configurations, but these were mainly suitable for applications up to 12 bar pressure. Biomass-to-hydrogen conversion processes require operating the gasifiers at pressures higher than 12 bars and preferably in the range of 35-70 bars. Moreover, from the material balance around the gasifier, the hydrogen production per lb feed is reduced tremendously at moisture content higher than 20%, making it uneconomical. Therefore, we limited our study to pressurized feeders that can operate at pressures higher than 12 bars, and with feeds containing no more than 20% moisture level. Of those systems considered to be suitable for operation, a number was selected for more detailed examination. These fell into three (3) categories: rotary valve feeders, lock hopper feed systems, and plug feed systems. The plug feed system design is based on on-stream biomass densification and direct feeding to the reactor at gasifier pressure. The plug feed system comes in different vendor designs, represented by one or more manufacturer. The discussion below assumes that the biomass feed is only dried, cut and/or milled and fed "as is" with no pre-densification step prior to the feed system.

---

[3] "The Use of Switchgrass Biofuel Pellets as a Greenhouse Gas Offset," R. Samson, M. Drisdelle, L. Mulkins, C. Laponite, and P. Duxbury, Report Bioenergy 2000, August 2, 2000.

[4] "Feeding Biomass into Pressure and Related Safety Engineering", by Aimo Rautalin and Carl Wilen, VTT Technical Research Center of Finland, ESPOO 1992.

[5] "Industrial expertise in continuous biomass feeding equipment to pressurized reactors; potential application to new and existing biomass hydrolysis reactor designs". A Workshop Conducted at the National Renewable Energy Laboratory on April 23, 1999. Prepared by Richard Elander.

3.4.1 Rotary Valve Feeders

In rotary valve feeders, biomass is conveyed from a non-pressurized hopper into the pressurized gasifier in a pocket created by the rotor blades and the feeder frame. Pressure sealing is secured by blowing with high-pressure gas or steam. Two types of rotary valve feeders that operate at about 10-bars pressure were reported. [4] They are designs by: Beloit/IMPCO (formerly C. E. Bauer) and Ahlstrom/Kamyr Inc. The Beloit/IMPCO design (Figure 1) is designed to feed at 9.7 bars reactor pressure. The Ahlstrom/Kamyr Inc. "Asthma" feeder (Figure 2) is designed for sawdust, wood residues and biomass such as bagasse, straw and bamboo. Another rotary feeder design by Kamyr Inc. was reported[4] to feed wood chips into a vessel at 25 bars pressure, but no details were found.

Advantages and disadvantages of the rotary feeders are summarized in Table 3. Reference 4 suggests that the capital cost of a rotary feeder is about 10% of that for a lock hopper system with the same feed capacity. Fibers from bagasse and switchgrass feedstocks are expected to stick to the rotor blades and interior valve body, causing incomplete discharge of the fuel and wearing of valve parts. The rotary feeder is unreliable, and may cause forced plant (gasifier) shutdowns.

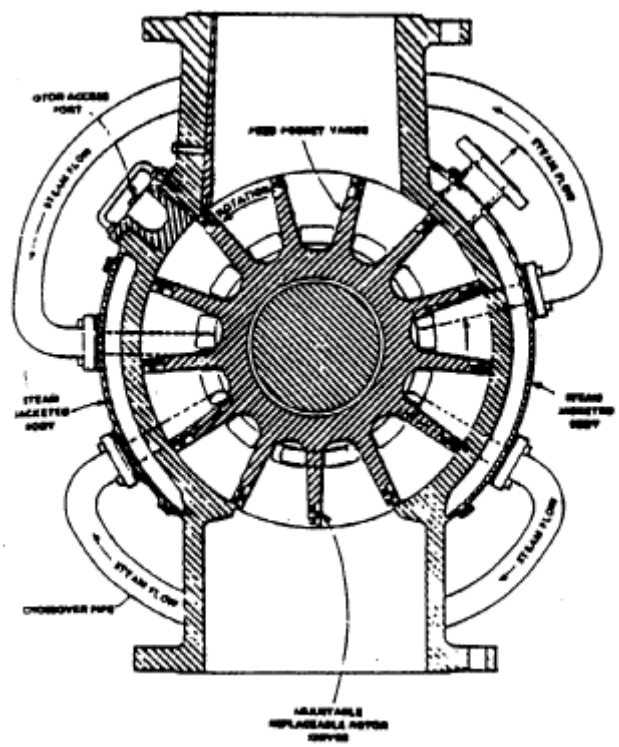

Figure 1. The Beloit / IMPCO Rotary Feeder

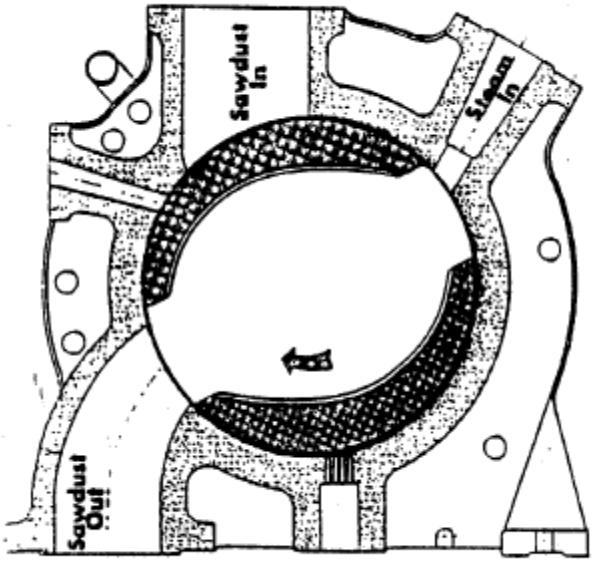

Figure 2. The Ahlstrom / Kamyr Inc. “Asthma” Feeder

Table 2. Biomass Feed Systems

Type of Feed	Pressure, Bar	Capacity, Tones/h	Feedstock	Manufacturers
Rotary Valves	1-25	Up to 140	Wood, saw dust, jute, bagasse, straw, bamboo	- A. Ahlstrom Corporation - Beloit/ IMPCO Division - Ahlstrom/Kamyr Inc. (Asthma Feeder) - Koopers Co. - C.E. Bauer - Beamont Feeders Inc. - Bioneer - Radar
Lockhopper Metering Bin-Injector Screw	1-90	Up to 80	Wood, alfalfa, bagasse	- Miles Consulting Engineer/GTI (formerly IGT) at pilot plant in Chicago, at Carbona (formerly Enviropower) in Finland, and at Biomass Gasification Facility in Hawaii - Framatome (Clamecy)
Plug Feeders-Screw Type	1-50	Up to 29	Wood chips, bagasse	- Sunds (Defibrator Screw Feeder) - Ingersoll-Rand Reciprocating Screw Feeder - Werner and Pfleiderer
Plug Feeders, Screw/Piston-Type	1-40	Up to 10	Wood, fibrous biomass	- The Stake technology (StakeTech Feeder) - Vattenfall Energisystem AB of Sweden - Ingersoll-Rand Co-Axial
Plug Feeders, Piston - Type	1-40	Up to 20	Wood, fibrous biomass	- Schlepper (Lurgi) - Single Acting Piston Feeder (Ingersoll-Rand) - Conspray Feeder (Conspray construction systems - Linear Pocket Feeder (Foster Wheeler)
Plug Feeders Two Piston-Type	1-23	Up to 1	Peat, saw dust, sludge	- Fortum Feeder of Finland
Paste-Feeding, Piston-Type Pump	1-150	Up to 40	Peat, saw dust, sludge	- Putzmeister GmbH of Germany
Pneumatic Feed Systems	Up to 1	Up to 50	Peat, saw dust, sludge	-

Table 3. Advantages/Disadvantages of Rotary Feeders

Advantages	Disadvantages
Little inert gas required. Low capital and operating costs. Low energy consumption. Good feed rate control by regulating speed of rotor. Ability to handle wide variety of feedstocks, including sawdust and fibrous material. Good pressure sealing ability and recirculation of pressurizing gases. Compact Size.	Vulnerable to sticking of moist and resinous materials in valves interior, causing gas leaks and wear, thus requiring routine maintenance and replacement. Unexpected discharge of feed material in the discharge stage causing variations in back- pressure. Limited to pressure differential of less than 10 bars, with exception to slurry feed. Susceptible to bridging and jamming.

3.4.2 Lock Hoppers-Metering Bin-Injector Screw

Lock hoppers and gravity flow have been widely used for feeding into pressurized gasifiers. This feed system is simple and has been used for coal feeds (5 to 7 % moisture) by Lurgi and others for feed rates up to 70 tonnes/h at pressures as high as 90 bars. For biomass feeds, which have lower density and higher moisture content, the lock hopper gravity flow feed system had to be modified. The lock hopper had to be retrofitted with live bottom metering bin equipped with a multi-screw injector system that meters the fuel to the injector screw of the pressurized gasifier. Initially, this design modification has been proposed by Thomas R. Miles Consulting Engineers, as shown in Figure 3. Different variations of the Miles feeder have been successfully tested at GTI (formerly IGT) and Carbona Inc. (Formerly Enviropower). Such a feeder is expected to deal with fuel that has a wide range of chemical and physical properties.

Figure 3 illustrates the principals of operation. After a batch of fuel is received, the lock hopper is sealed and pressurized with high-pressure inert gas. When the pressure in the lock hopper is equalized with the surge hopper (Meter bin), a valve is open to dump the material into the surge hopper. When the pressurization hopper is empty, the valve is closed and the lock hopper is vented to atmospheric pressure.

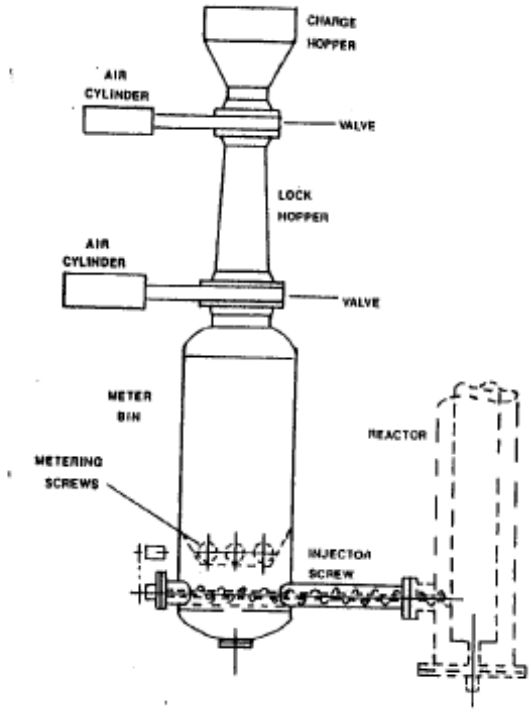

Figure 3. Lock Hopper System with Live Bottoms

The feed system can be separated from the gasifier with an isolation valve located between the metering screw and the feeding screw. The isolation valve is used in case of gasifier malfunctions in order to stop the fuel feed or when the fuel feeding line is not operational.

Advantages and disadvantages of lock hopper feed systems are summarized in Table 4. Reference 3 suggests that the capital cost of a lock hopper feed system is about 5% and 17% cheaper than equivalent capacity piston-type (Kone Wood) and screw piston-type (StakeTech) feeders, respectively. However, for an equivalent capacity feeder it consumes about 5 and 31 times more inert gases than the piston-type (Kone Wood) and screw piston-type (StakeTech) feeders, respectively. Fibrous feed materials, e.g., bagasse and switchgrass, are expected to arch and bridge in the lock hoppers causing non-continuous feed. This problem is eliminated somewhat by using an inverted lock hopper cone design.

Table 4. Advantages/Disadvantages of Lock Hopper Feed System:

Advantages	Disadvantages
Moderate capital investment cost. Low energy consumption. Well-proven and widely tested. Basic design with few moving parts. Capable of accepting a wide range of feedstock particle sizes, provided the material flowability is maintained.	High consumption of inert gas. Feed material may jam and stick to lock hopper valves and interiors, causing wearing of valves, sealing, sticking of valves, and loss of compression gases. Fibrous feed material can result in arching, jamming and bridging. May cause non-continuous feed. Requires a fairly complex control system for valve sequencing, pressurizing, de-pressurizing, and feed rate control.

The lock hopper feeder system offers the advantage of a simple design with few moving parts. In addition, the lock hopper system can handle different types of biomass fuel, including high-moisture content fuel. Moreover, it is the most reliable and has been widely tested. This system has been tested extensively with different types of biomass. For example, this system was tested feeding 9 tonnes bagasse /day against 34 bars pressure gasifier at GTI pilot facility. It was also tested feeding 4.5 tonnes bagasse/h at the BGF Plant site in Hawaii against 20 bars pressure. Historical performance of the lock valves, however, has been reported to be relatively poor for biomass applications.

Many suggestions and modifications have been recommended to improve lock hoppers reliability and durability and to reduce the operating costs. The consumption of pressurizing gas increases sharply as the reactor pressure rises. By having two parallel lock hoppers, inert gas consumption is reduced as the pressure release gas of one lock hopper can be used for pressurizing the other. Moreover, at high feed capacities and pressures, the number of feed cycles is high, resulting in considerable wearing of the sealing components in valves; resulting in high operating and maintenance cost. The double lock hopper design also reduces the wear by reducing the number of cycles.

3.4.3 Plug Feeders

3.4.3.1 Screw-Type: Screw feeders come in a variety of general designs for feeding pressurized reactors, including variable cross section, constant cross section with reciprocating screws, and multiple intermeshing screws. Screw feeders have been developed for and used in the pulping industry at pressure differentials of less than 14 bars pressure. In addition to pulping, screw feeders have been widely used in large scale commercial processes (>1000 tons/day) in several biomass conversion processes, including thermal processes, such as gasification and pyrolysis. This feeder design is represented by the Sunds Defibrator of Sweden and has been successfully used in the pulp industry for feeding wood chips into pressurized processes. The design, shown in Figure 4, is a variable cross section screw feeder. In this system, feedstock enters the screw chamber via a gravity-discharge hopper. The screw flights advance the feedstock forward into a conical throat section. This section is lined with a perforated sheet to allow any free liquid that is squeezed from the feedstock to escape. The conical throat contains anti-rotation bars to help

direct the feedstock forward through the feeder rather than rotating with the feeder shaft. The conical throat ends at a cylindrical plug pipe, where the feedstock has been sufficiently compressed to form a pressure-holding plug. A back-pressure adjuster regulates the strength of the plug formed and its pressure sealing against back-pressure. It is also designed to break extricates. A conical blow back dampener rides on the surface of the plug. If the integrity of the plug is lost, a pneumatic sleeve will cause the blow back dampener to snap shut to help maintain pressure in the reactor. Screw feeders of this design have typically been used in large (up to 1000 tons/day) pulping processes at pressure differentials of 12.5 bars or less using wood chips feedstock. A slightly different design, manufactured by the French Oil Mill Machinery Co., was used in a large scale sugar cane bagasse hydrolysis process for furfural production for 30 years before this plant was recently de-commissioned.

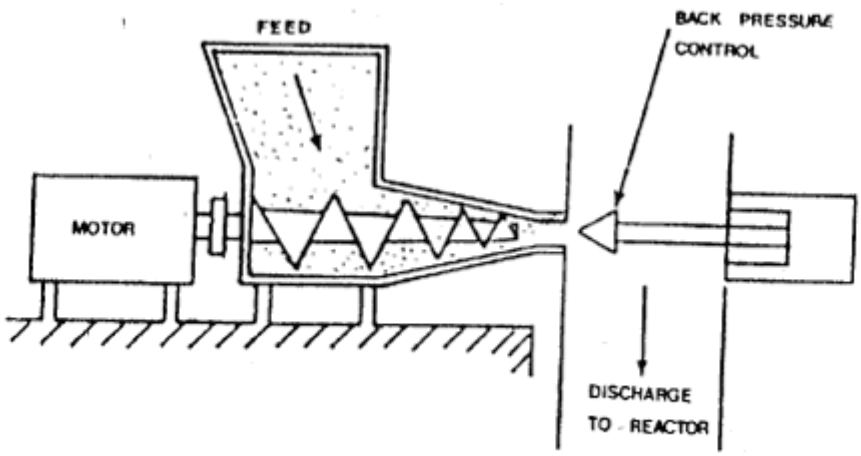

Figure 4. The Sunds Defibrator Screw Feeder

An example of a constant cross section screw feeder system that may be applicable for feeding biomass to pressurized reactors is the Ingersoll-Rand Reciprocating Screw Feeder. This feeder system has been tested on coal feedstock and may be applicable to biomass feedstocks as well. The test unit has a capacity of 18 tonnes/day and a maximum pressure differential between 55 - 105 bars pressure.

Werner and Pfleiderer Feeder is a multiple intermeshing screw feeder. It was initially designed as an extruder system, but has been tested as a feeder to pressurized reactors using coal particles and sawdust as feedstocks. Capacities of up to 400 tonnes/day have been tested for coal, but only about 2 tonnes/day for sawdust. Pressure differential of 100 bars is typical.

Advantages and disadvantages of the Screw-type Feeder, such as Sunds Defibrator, are summarized in Table 5. The capital cost of a Screw-type Feeder (i.e., Sunds Defibrator) is expected to be in the order of the Screw/Piston-type feeder capital cost, or 5% higher than lock hoppers with equivalent capacity. Inert gas usage and energy consumption are also expected to be close to the Screw/Piston-type feeder (e.g., StakeTech). The Sunds Feeder is estimated to consume about 96 % less inert gas and about 100-fold more power than lock hopper feed

systems. Severe erosion of key components that often requires routine refurbishing or replacement is one major disadvantage. In addition the Sunds Feeder has difficulties in processing sticky or stringy feedstock (e.g., switch grass and bagasse), which have tendency to become packed between screw flights or wound around the screw shaft. The Sunds Feeder was tested with bagasse as feed in the mid 1990's by GTI at the BGF Plant site in Hawaii against 20 bars pressure. The feeder failed to properly operate due to formation of "hockey puck-like" plugs that totally plugged and locked into the feed entry to the gasifier. This was due to formation of tarry phenolic material generated from the pyrolysis reaction of bagasse components (e.g., sucrose) due to frictional heat.

Table 5. Advantages/Disadvantages of Screw-type Feeder:

Advantages	Disadvantages
Low consumption of inert gas. Well-proven and widely tested. Continuous or near-continuous feeding. Compact size with versatile installation options. Good pressure sealing ability, when equipped with blowback protection.	High energy consumption due to high frictional forces, and plug formation. Feed material has tendency to clogging and jamming. Difficult to feed dry feedstocks. Susceptible to bridging at the feeder inlet, especially for wet, sticky and fluffy feedstocks. Severe erosion of key components (screw, conical throat and plug pipe) that often requires routine refurbishing or replacement.

3.4.3.2 Screw/piston-type: Various vendors have proposed different screw/piston-type feeder design versions. Designs made by The Stake Technology (StakeTech Feeder)[3] , and Vattenfall Energisystem AB of Sweden[2] are examples of various designs. The principal of this design is based on densification in two steps. During the first stage, the feed screw transports and compresses the material by rotation to the receiving chamber and feed material to the front of the piston, while the piston is in its back position. When a sufficient dense plug is created the rotation stops and the plug is further densified and transferred into a pressure chamber (gasifier) by axial non-rotational motion of the screw-piston. The StakeTech Feeder and the Vattenfall Feeder are shown in Figures 5 and 6, respectively.

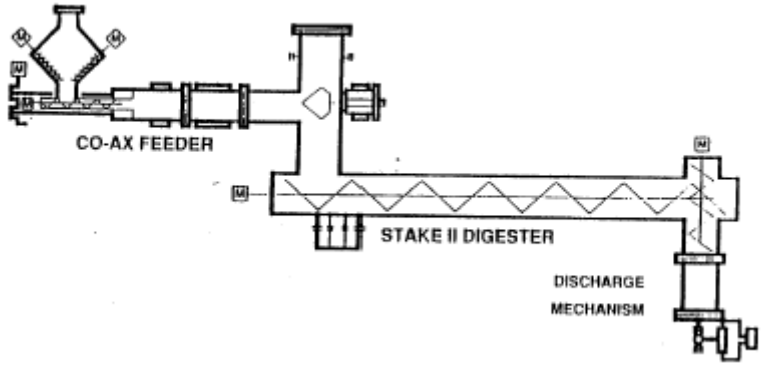

Figure 5. The Stake Feeder Design

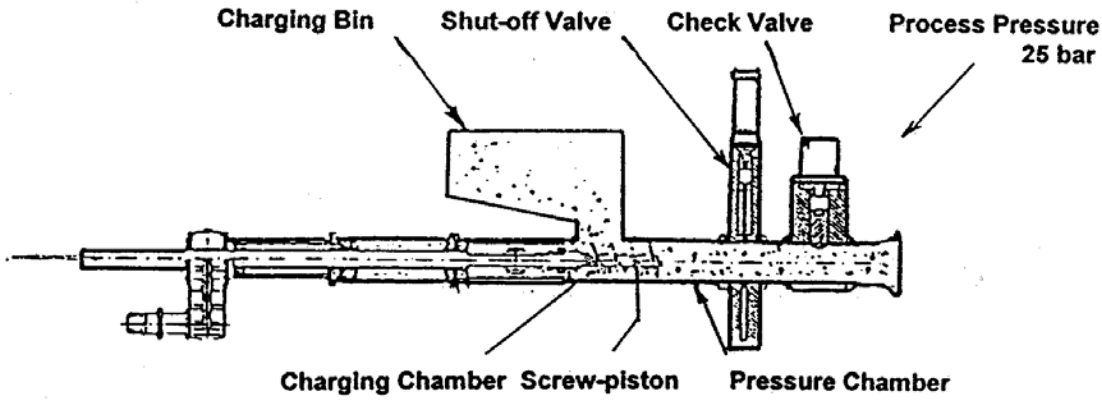

Figure 6. Vattenfall Energisystem AB of Sweden Feeder Design

The Stake Feeder maximum capacity is about 200 Kg/h dry wood chips and the propulsion force has been measured at about 350-400 bars. This indicates that high forces are required and the frame and supporting structure of the feed should be sturdy. Because of heavy equipment wear, high maintenance is required.

The Vattenfall Feeder has been developed for fibrous fuels, such as bagasse and switch grass. A prototype version has been extensively tested with an estimated feeding capacity of 10.8 tonnes/h.

Advantages and disadvantages of the Piston/Screw-type Feeder, such as the StakeTech, are summarized in Table 7. The capital cost of a Piston/Screw-type Feeder is reported[3] to be 5% higher than a lock hopper feed system with equivalent capacity. The Stake Feeder is estimated to consume about 96 % less inert gas and about 100-fold more power than lock hopper feed systems. Fibers from bagasse and switchgrass feedstocks are expected to clog the extruder and stop the feed to the gasifier. Similar to the screw-type feeder, this feeder is expected to suffer from the clogging problems that are inherent in the Screw-type feeders. The clogging, however, is expected to be milder. The high frictional heat also causes wear of equipment components.

Table 7. Advantages/Disadvantages of Screw/Piston-type Feeder:

Advantages	Disadvantages
Moderate capital investment cost. Low consumption of inert gas. Short cycling, leading to near-continuous feeding. Good pressure sealing ability at relatively high-pressure differentials. Feed system is compact.	High energy consumption due to high frictional forces. High frictional forces, can lead to heating of feedstock, and wear. Complex systems may be necessary to deliver feedstock to piston. Limited commercial-scale testing.

3.4.3.3 Piston-type: Piston feeders feed the biomass fuel under normal atmospheric pressure to a feeding tank. After filling, the piston moves forward compressing and reducing the volume of the feeding tank. As a consequence, the pressure increases and the material moves forward in the cylinder. When reaching the required pressure level, the valve is opened and the fuel is fed into the gasifier. The principle of operation of piston-type feeders is shown in Figure 7. The feed cycles can be increased to a point where continuous feeding is possible.

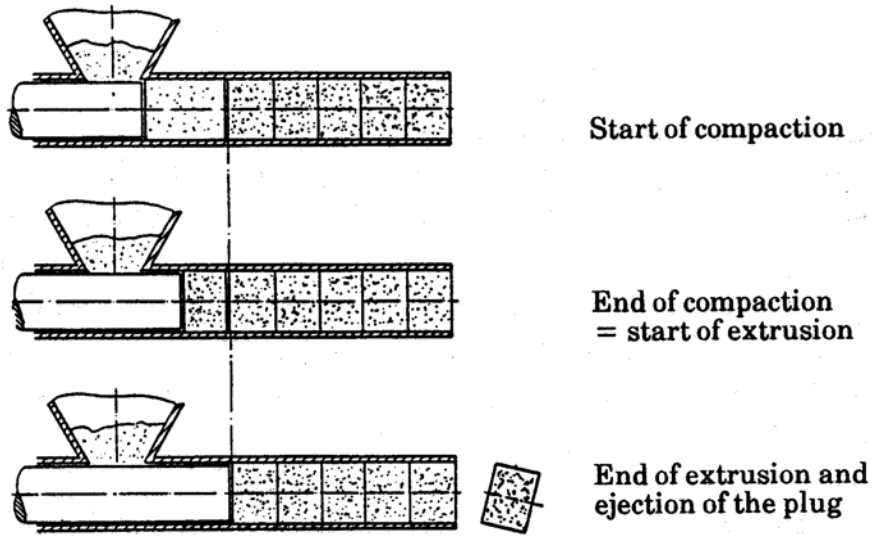

Figure 7. The Operating Principle of a Piston feeder.

This feeder is suited for dry fuels. Piston-type feeders are compact and integrated. They require little or no inert gases. Various manufacturers have proposed different design versions of piston feeders. For example the Schlepper piston feeder by Lurgi; the single-acting piston feeder by Ingersoll-Rand; the Conspray feeder by Conspray Construction Systems; and the linear pocket feeder by Foster Wheeler.

Advantages and disadvantages of the Piston-type Feeder, such as the Schlepper designed by Lurgi, are summarized in Table 8. The capital cost of a Piston-type Feeder is reported[3] to be 20% higher than a lock hopper feed system with equivalent capacity. The Piston Feeder is estimated to consume about 79 % less inert gas and about twice the power of a lock hopper feed system. High frictional forces in the piston sleeve can lead to high power consumption, heating of feedstock material and equipment wear. Fibers from bagasse and switchgrass feedstocks are expected to clog the extruder and stop the feed to the gasifier. Like the screw-type feeder, this feeder is expected to suffer from the clogging problems that are inherent in the Screw-type feeders. The clogging, however, is expected to be milder. The piston feeders may potentially be high cost due to the complexity of the system.

Table 8. Advantages/Disadvantages of Piston-type Feeder:

Advantages	Disadvantages
Moderate consumption of inert gas. Feed system is compact. Short cycling, leading to near-continuous feeding. Good pressure sealing ability at relatively high-pressure differentials.	Moderate energy consumption due to frictional forces in the piston sleeve. High frictional forces, can lead to heating of feedstock, and wear. Difficult to feed dry feedstocks. Complex system may be necessary to deliver feedstock to the piston chamber, especially for wet or sticky feedstocks.

3.4.3.4 Two-piston-type: Fortum of Finland has developed a piston-type feeder for different types of fuel (shown in Figure 8. The feeder consists of two cylinders, which can be rotated 180° and a valve between the feeder and the high-pressure process vessel. The feeder is hydraulically operated and the hydraulic system can be assembled from commercially available components.

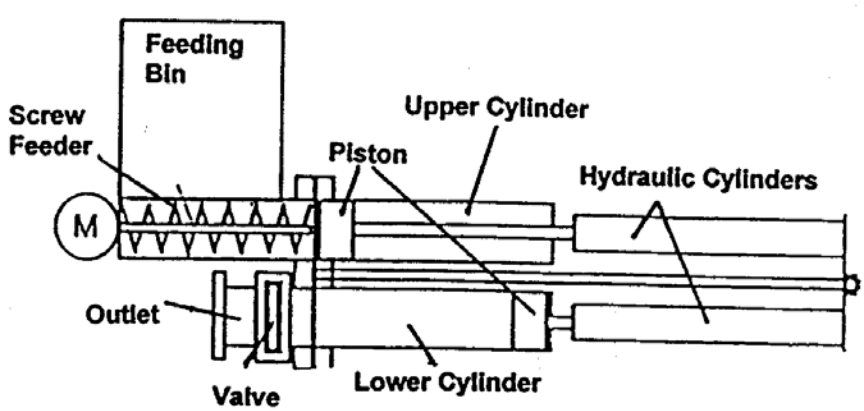

Figure 8. FORTUM Piston Feeder

The principle operation of this feeder is shown in Figure 8. Initially, the lower piston filled with biomass, is moved forward until the pressure in the lower cylinder is raised to the same pressure

as in the gasifier. Then the valve between the feeder and the high-pressure process is opened. The lower cylinder is emptied to the high pressure by moving the piston forward, and at the same time the upper cylinder is filled with biomass fuel by a pre-compression screw feeder.

After the upper cylinder is filled with fuel and the lower cylinder is emptied, the valve between the feeder and the high-pressure gasifier is closed. The lower piston is moved backward until the pressure in the lower cylinder decreases. The cylinders are rotated 180°, so that the cylinders switch places. This means that the cylinder filled with biomass becomes the lower cylinder, the empty cylinder becomes the upper cylinder, and the feeding cycle starts again.

A pilot-scale feeder with a capacity of 10 m^3/h has been tested since 1993 with different feed materials, such as peat, saw dust, wood biomass, and different sludge, up to a pressure of 23 bars. Testing has consisted of short-term duration up to 1-week runs, which have provided information about the operation and durability of the feeder with different feed materials.

Advantages and disadvantages of the Fortum Piston Feeder are summarized in Table 9. The capital cost of the Fortum Piston Feeder is expected to be slightly higher than other piston feeders, due to the additional rotation mechanism. Therefore, the capital cost is expected to be at least 20% higher than a lock hopper feed system with equivalent capacity[3]. The Piston Feeder is estimated to consume about 79 % less inert gas and about twice the power of a lock hopper feed system[3]. High frictional forces in the piston sleeve can lead to high power consumption, heating of feedstock material, and equipment wear. This feeder may suffer from clogging problems that are inherent in other Piston-type feeders. The clogging, however, is expected to be milder. The material plug generated during the compression cycle is not exposed to the gasifier hot gases. This reduces and/or eliminates the formation of tarry/phenolic material that can solidify around the cylinder interiors prohibiting the plug release to the gasifier. This Fortum feeder can potentially be higher cost due to the complexity of the system.

Table 9. Advantages/Disadvantages of Fortum Piston Feeder:

Advantages	Disadvantages
Moderate consumption of inert gas. Low to moderate energy consumption. High capacity. Plug only exposed to gasifier high temperature and pressure for a short period of time.	High frictional forces, can lead to heating of feedstock and wear. Difficult to feed dry feedstocks. Limited commercial testing. Complex system may be necessary to deliver feedstock to the piston chamber, especially for wet or sticky feedstocks.

4. Conclusions and Recommendations

A number of equipment designs for feeding biomass feedstock to pressurized gasifiers may be applicable to the biomass-to-hydrogen processes. All of these feed systems share the common requirement of continually feeding biomass to a pressure vessel. The processes, however, differ in terms of how the solids are processed during feeding, which has significant materials of construction implications. The main issues that are involved in the choice of a pressurized feed system are process pressure, volume, quality of feedstocks, and particle size.

Ideally, a biomass pressure feeder must: 1) be highly reliable; 2) have low construction, maintenance and operational costs; 3) be low in power consumption; 4) have a wide applicability to various biomass feeds; 5) be able to meter and convey biomass in a continuous and non-pulsating manner; 6) be suitable for handling a variety of bulk materials; 7) be insensitive to variations in fuel quality (bulk density, particle size, moisture content and flowability); 8) be able to build sufficient pressure seal against backstroke; and 9) have accurate feed control. In addition, plant size also influences the choice of the feeding system. In general, only a few of these properties can be met, and compromises must be made. These variables are used in making the final choice.

One means of comparing the various feeder design options is in terms of power consumption. In Table 10, specific power consumption (kW per tonne dry feedstock per day) is presented for specific feeder designs from the three main categories[5]. Some of the data in Table 10 are estimated based on the power of similar equipment. As a general rule, plug feeders (screw feeders, screw-piston feeders, and piston feeders) tend to have significantly higher specific power consumption levels than rotary valve feeders and lock hopper systems. This difference is primarily related to the requirement to compress the feedstock to form a pressure-holding plug, which is a highly energy intensive process. Also, as the pressure differential increases, the specific power requirement generally increases as well. This is especially true for the plug feeder, where a higher-pressure differential implies a more compressed feedstock plug to hold against the pressure differential.

Table 10. Operating Variables and Capital Cost for Different type Feeders

Feeder Type	Specific Power kW/tonne/day	Capital Investment Cost Index	Inert Gas Consumption Kg/day
Rotary Valves	0.016	10 (estimate)	129600 (estimate)
Lock hopper	0.082	100	194400
Plug, Screw-type Feeder	0.82 (Sunds Feeder) 1.64 (Ingersoll-Rand)	105 (estimate)	8295 (estimate)
Plug, Screw/Piston-type Feeder	0.082 (Stake Feeder)	105	8295
Plug, Piston-type Feeder	0.164 (Kone Wood)	120	41470
Fortum Piston Feeder	0.082 (estimate)	120 (estimate)	20740 (estimate)

Another means of comparing the various feeders is in terms of capital investment costs. Table 10 also shows a comparison of relative investment costs of the lock hopper system, the piston feeder (Kone Wood), and the StakeTech Feeder based on information supplied by vendors[2].

Costs for the rotary feeder is estimated from data in Reference 4 and costs for other feeders are estimated by similarities. The investment costs do not include installation or costs associated with inert gas consumption.

A third means of comparing the feeders is in terms of inert gas consumption. Table 10 also shows a comparison of relative consumption of inert gases for the lock hopper system, the piston feeder (Kone Wood), and the StakeTech Feeder based on information supplied by vendors[2]. Consumption of inert gases for other feeders are estimated by similarities. Table 10 also shows relative consumption of inert gas for the feeders. Screw piston feeders consume the least inert gas.

Equipment wear from erosion and/or corrosion appears to be universal, to greater or lesser extents, in all existing feeder equipment that may be applicable for biomass feed to gasifiers. This problem is more prevalent in plug feeders due to high power usage and more complex rotating equipment.

Plug feeders are not the best option for feeding biomass to gasifiers. There are deficiencies in their design and in the availability of practical wear-resistant materials of construction, resulting in frequent refurbishing and/or replacement of equipment. The problems of higher wear, as well as high power consumption, will become exacerbated at high pressure differentials, which is a consideration for gasifiers that require high temperatures and pressures. Finally, the ability of a plug feeder to handle stringy and fluffy feedstocks, such as bagasse and switch grass, may be dependent upon pre-processing steps, including pelletizing and/or pre-densification that is rather costly. The Fortum piston feeder, however, has relatively low power consumption and moderate consumption of inert gases. Equipment wear from erosion appears to be much lower than other plug feeders. This is due to a two-stage operation of the plug feed system. The first, a plug formation stage, is developed at relatively low pressure differential, and the second, the plug release to gasifier, conducted at high pressure and temperature for a relatively short period of time. Therefore exposure of the feedstock material to high frictional forces (temperature) and gasifier temperature is minimized, thus reducing the wear and erosion of the cylinder interior. This also eliminates plugging the gasifier inlet due to formation of glue-like material from feedstock pyrolysis. The Fortum feeder deserves further investigation when a feed system is fully designed.

The rotary feeders advantage is the low capital cost and energy consumption, but the inert gas consumption is high. Rotary valves feeders, designed for dry feedstocks, are limited to about 10 to 12 bars pressure. If higher pressures are required for the gasifier, this feeder may not be considered unless higher pressure designs are developed and tested.

Despite the likely higher operating costs (due to high inert gas usage) than other alternative feeders, the lock hopper-based feed system is the preferred choice for all feedstocks. Moreover, lock hoppers have been extensively tested with various biomass fuels and are considered to be a well-proven technology. In contrast, other alternative feed systems have not been fully developed and do not have a proven track record.

We recommend the employment of two parallel lock hoppers to improve the feed systems reliability and durability and to reduce the operating costs. In this system a 25 to 30% less inert gas is consumed compared to the case of only one lock hopper. Moreover, at high feed capacities and pressures, the total number of feed cycles is high, resulting in considerable wear of the sealing components of valves. The double lock hopper design reduces the wear by reducing the number of cycles.

Another direct method to reduce the consumption of inert gas is "partial compaction" of the fuel in the lock hoppers. This involves pushing down on the fuel to compact it by a ratio up to 2:1. This partial compaction requires a design of an internal piston-like device in each lock hopper. This can be accomplished at a low cost, and may be able to reduce the inert gas consumption by as much as 30%.

Appendix C – Unit and Conversion Factors

UNIT AND CONVERSION FACTORS

British unit (B)	Metric equivalent (M)	
ACRE	= 4047 m2	
ATMOSPHERE atm	= 101.325 kPa	
BARREL (petroleum, 42 gal) bbl	= 0.15899 m3	
BAR	= 100 kPa	
BRITISH THERMAL UNIT Btu	= 1055 J	
CUBIC FOOT ft3	= 0.02832 m3	
degree Farenheit (°F)	= F-32/1.8 degree Celsius (°C)	
ft3/min	= 471.9 cm3/s	= 0.0004719 m3/s
scfm (60F, 1 atm)	= 0.4474 liter/s	= 0.0004474 m3/s (0c, 1 atm)
CUBIC INCH in3	= 1.6387 E-5 m3	
CUBIC YARD yd3	= 0.7646 m3	
FOOT ft	= 0.3048 m	
ft of water @ 68F	= 2.989 kPa	
ft/min	= 0.5080 cm/s	= 0.005080 m/s
ft-lbf (*torque*)	= 1.356 J	
GALLON gal	= 3.7854 liter	= 0.0037854 m3
Gpm	= 0.22715 m3/h	= 6.309 E-5 m3/s
HORSEPOWER hp	= 746 W	
INCH in	= 0.0254m	
in Hg	= 3.3864 kPa	
in H2O	= 0.249 kPa	
KWh	= 3.6 E6J	= 3.6 MJ
MILE mi	= 1609.3 m	= 1.6093 km
Mph	= 0.4470 m/s	
OUNCE (*wt*) oz	= 0.02835 kg	
OUNCE (*liq*) oz	= 0.02957 liter	= 2.957 E-5 m3
POISE p	= 0.1000 N-s/m2	= 0.1000 Pa-s
POUND (*mass*)	= 0.4536 kg	
lb/ft3	= 16.018 kg/m3	
Lbf	= 4.448 N	
lbf/in2	= 6.895 kPa	
QUART	= 0.9464 liter	= 9.464 E-4 m3
TON ton (short)	= 907.2 kg	
TON (tonne)	= 1000 kg	

Adapted from American National Standards Institute ANSI Z210.1-1976/ASTM E 380-93/IEEE Std 268-1976.

Appendix D – Bagasse Process Design and Streams

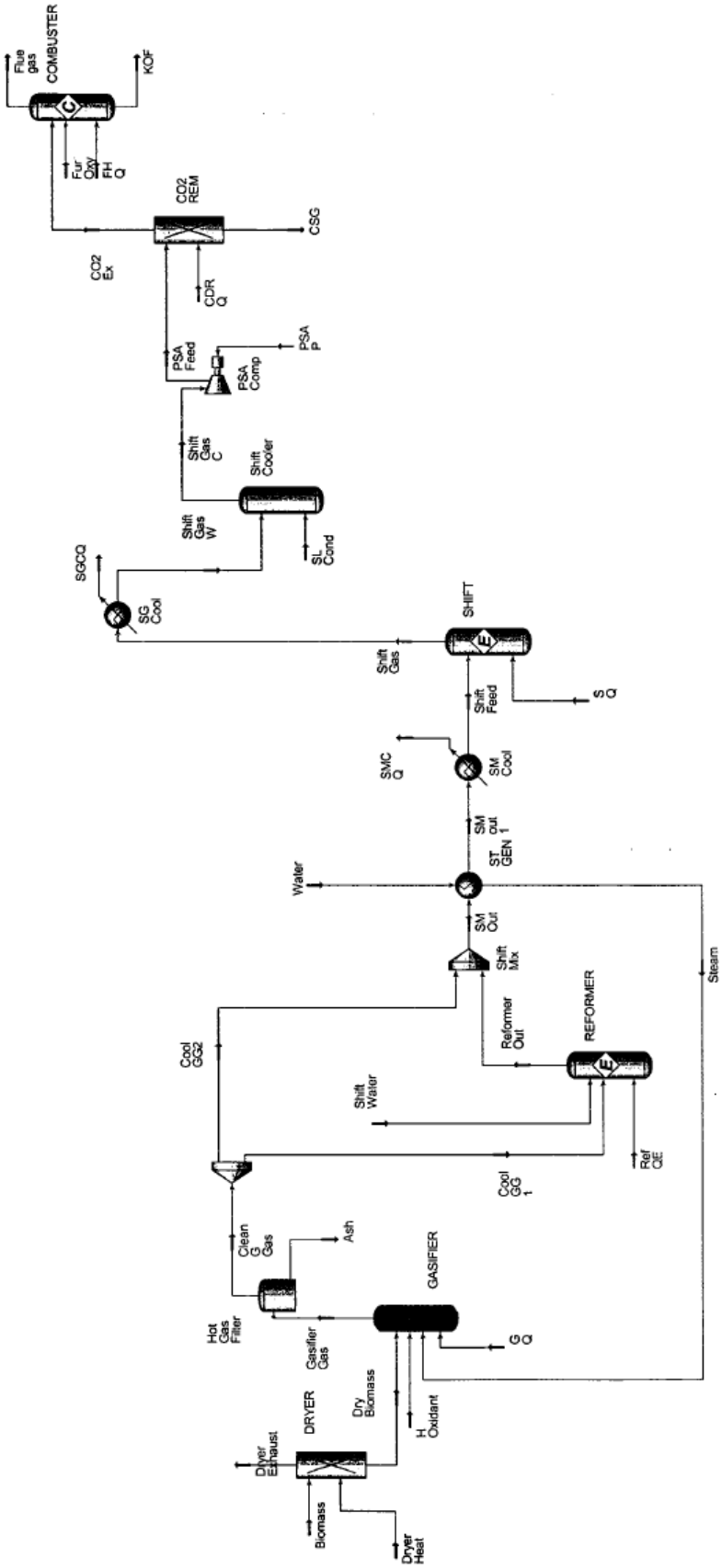
Flue gas
COMBUSTER
KOF
Fur
Dry
FH
Q
CO2 REM
CSG
CO2 Ex
CDR Q
PSA Feed
PSA P
PSA Comp
Shift Gas C
Shift Cooler
Shift Gas W
SL Cond
SGCQ
SG Cool
SHIFT
Shift Gas
Shift Feed
S Q
SMC Q
SM Cool
SM out
ST GEN 1
Water
SM Out
Shift Mix
Steam
Reformer Out
REFORMER
Cool GG2
Shift Water
Ref QE
Cool GG 1
Clean G Gas
Ash
GASIFIER
Hot Gas Filter
Gasifier Gas
G Q
DRYER
Dry Biomass
H Oxidant
Dryer Exhaust
Biomass
Dryer Heat

HYPROTECH LIFECYCLE INNOVATION

Institute of Gas Technology
Calgary, Alberta
CANADA

Case Name: C:\Documents and Settings\zabransky\Simu Programs\HYSYS 2.4.1
Unit Set: SI
Date/Time: Thu Dec 05 15:27:24 2002

Workbook: Case (Main)

PSA 5d All Streams

Name	Biomass	Dryer Exhaust	Dry Biomass	H Oxidant	Steam
Vapour Fraction	0.0000 *	1.0000 *	0.0000 *	1.0000	1.0000
Temperature (C)	26.67 *	134.6	134.6	315.6 *	260.0 *
Pressure (kPa)	344.7 *	310.3 *	310.3 *	689.5 *	758.4 *
Molar Flow (kgmole/h)	1092	693.7	397.9	195.5	257.9
Mass Flow (kg/h)	3.332e+004 *	1.250e+004	2.083e+004	6178 *	4646
Liquid Volume Flow (m3/h)	34.03	12.52	21.51	5.498	4.656
Heat Flow (kJ/h)	-2.637e+008	-1.647e+008	-5.312e+007	7.926e+005	-6.014e+007
Molar Enthalpy (kJ/kgmole)	-2.416e+005	-2.375e+005	-1.335e+005	4054	-2.332e+005
Comp Mole Frac (BIOMASS*)	0.1527 *	0.0000	0.4188	0.0000 *	0.0000
Comp Mole Frac (Hydrogen)	0.0000 *	0.0000	0.0000	0.0000 *	0.0000
Comp Mole Frac (CO)	0.0000 *	0.0000	0.0000	0.0000 *	0.0000
Comp Mole Frac (CO2)	0.0000 *	0.0000	0.0000	0.0000 *	0.0000
Comp Mole Frac (H2O)	0.8473 *	1.0000	0.5812	0.0200 *	1.0000
Comp Mole Frac (Methane)	0.0000 *	0.0000	0.0000	0.0000 *	0.0000
Comp Mole Frac (Ethane)	0.0000 *	0.0000	0.0000	0.0000 *	0.0000
Comp Mole Frac (Ethylene)	0.0000 *	0.0000	0.0000	0.0000 *	0.0000
Comp Mole Frac (Propane)	0.0000 *	0.0000	0.0000	0.0000 *	0.0000
Comp Mole Frac (Benzene)	0.0000 *	0.0000	0.0000	0.0000 *	0.0000
Comp Mole Frac (Nitrogen)	0.0000 *	0.0000	0.0000	0.0300 *	0.0000
Comp Mole Frac (Oxygen)	0.0000 *	0.0000	0.0000	0.9500 *	0.0000
Comp Mole Frac (Ammonia)	0.0000 *	0.0000	0.0000	0.0000 *	0.0000
Comp Mole Frac (HCN)	0.0000 *	0.0000	0.0000	0.0000 *	0.0000
Comp Mole Frac (H2S)	0.0000 *	0.0000	0.0000	0.0000 *	0.0000

Name	Gasifier Gas	Ash	Clean G Gas	Cool GG 1	Cool GG2
Vapour Fraction	1.0000	0.0000	1.0000	1.0000	1.0000
Temperature (C)	871.1 *	871.1	871.1	871.1	871.1
Pressure (kPa)	792.9 *	792.9	792.9	792.9	792.9
Molar Flow (kgmole/h)	1289 *	0.0000	1289	1289	0.0000
Mass Flow (kg/h)	2.979e+004	0.0000	2.979e+004	2.979e+004	0.0000
Liquid Volume Flow (m3/h)	44.20	0.0000	44.20	44.20	0.0000
Heat Flow (kJ/h)	-2.184e+008	0.0000	-2.184e+008	-2.184e+008	0.0000
Molar Enthalpy (kJ/kgmole)	-1.694e+005	-1.694e+005	-1.694e+005	-1.694e+005	-1.694e+005
Comp Mole Frac (BIOMASS*)	0.0000 *	0.0000	0.0000	0.0000	0.0000
Comp Mole Frac (Hydrogen)	0.1684 *	0.1684	0.1684	0.1684	0.1684
Comp Mole Frac (CO)	0.1176 *	0.1176	0.1176	0.1176	0.1176
Comp Mole Frac (CO2)	0.2463 *	0.2463	0.2463	0.2463	0.2463
Comp Mole Frac (H2O)	0.3649 *	0.3649	0.3649	0.3649	0.3649
Comp Mole Frac (Methane)	0.0798 *	0.0798	0.0798	0.0798	0.0798
Comp Mole Frac (Ethane)	0.0038 *	0.0038	0.0038	0.0038	0.0038
Comp Mole Frac (Ethylene)	0.0044 *	0.0044	0.0044	0.0044	0.0044
Comp Mole Frac (Propane)	0.0000 *	0.0000	0.0000	0.0000	0.0000
Comp Mole Frac (Benzene)	0.0030 *	0.0030	0.0030	0.0030	0.0030
Comp Mole Frac (Nitrogen)	0.0099 *	0.0099	0.0099	0.0099	0.0099
Comp Mole Frac (Oxygen)	0.0000 *	0.0000	0.0000	0.0000	0.0000
Comp Mole Frac (Ammonia)	0.0017 *	0.0017	0.0017	0.0017	0.0017
Comp Mole Frac (HCN)	0.0000 *	0.0000	0.0000	0.0000	0.0000
Comp Mole Frac (H2S)	0.0002 *	0.0002	0.0002	0.0002	0.0002

Licensed to: Institute of Gas Technology
* Specified by user.

Workbook: Case (Main) (continued)

PSA 5d All Streams (continued)

Name	Shift Water	Reformer Out	SM Out	SM out 1	Water
Vapour Fraction	0.0000	1.0000	1.0000	1.0000	0.0000
Temperature (C)	15.56 *	815.6 *	815.6	582.1	15.56 *
Pressure (kPa)	689.5 *	689.5	689.5	620.5	827.4 *
Molar Flow (kgmole/h)	0.0000 *	1536	1536	1536	257.9
Mass Flow (kg/h)	0.0000	2.979e+004	2.979e+004	2.979e+004	4646 *
Liquid Volume Flow (m3/h)	0.0000	49.12	49.12	49.12	4.656
Heat Flow (kJ/h)	0.0000	-1.936e+008	-1.936e+008	-2.072e+008	-7.379e+007
Molar Enthalpy (kJ/kgmole)	-2.861e+005	-1.260e+005	-1.260e+005	-1.349e+005	-2.861e+005
Comp Mole Frac (BIOMASS*)	0.0000 *	0.0000	0.0000	0.0000	0.0000 *
Comp Mole Frac (Hydrogen)	0.0000 *	0.3360	0.3360	0.3360	0.0000 *
Comp Mole Frac (CO)	0.0000 *	0.2199	0.2199	0.2199	0.0000 *
Comp Mole Frac (CO2)	0.0000 *	0.1727	0.1727	0.1727	0.0000 *
Comp Mole Frac (H2O)	1.0000 *	0.2529	0.2529	0.2529	1.0000 *
Comp Mole Frac (Methane)	0.0000 *	0.0085	0.0085	0.0085	0.0000 *
Comp Mole Frac (Ethane)	0.0000 *	0.0000	0.0000	0.0000	0.0000 *
Comp Mole Frac (Ethylene)	0.0000 *	0.0000	0.0000	0.0000	0.0000 *
Comp Mole Frac (Propane)	0.0000 *	0.0000	0.0000	0.0000	0.0000 *
Comp Mole Frac (Benzene)	0.0000 *	0.0000	0.0000	0.0000	0.0000 *
Comp Mole Frac (Nitrogen)	0.0000 *	0.0083	0.0083	0.0083	0.0000 *
Comp Mole Frac (Oxygen)	0.0000 *	0.0000	0.0000	0.0000	0.0000 *
Comp Mole Frac (Ammonia)	0.0000 *	0.0014	0.0014	0.0014	0.0000 *
Comp Mole Frac (HCN)	0.0000 *	0.0000	0.0000	0.0000	0.0000 *
Comp Mole Frac (H2S)	0.0000 *	0.0002	0.0002	0.0002	0.0000 *

Name	Shift Feed	Shift Gas	Shift Gas W	Shift Gas C	PSA Feed
Vapour Fraction	1.0000	1.0000	1.0000	1.0000	1.0000
Temperature (C)	232.2 *	232.2 *	93.33 *	93.33 *	226.5
Pressure (kPa)	620.5 *	551.6	551.6	551.6	1482 *
Molar Flow (kgmole/h)	1536	1536	1536	1536	1536
Mass Flow (kg/h)	2.979e+004	2.979e+004	2.979e+004	2.979e+004	2.979e+004
Liquid Volume Flow (m3/h)	49.12	57.73	57.73	57.73	57.73
Heat Flow (kJ/h)	-2.263e+008	-2.383e+008	-2.457e+008	-2.457e+008	-2.387e+008
Molar Enthalpy (kJ/kgmole)	-1.473e+005	-1.551e+005	-1.599e+005	-1.599e+005	-1.554e+005
Comp Mole Frac (BIOMASS*)	0.0000	0.0000	0.0000	0.0000	0.0000
Comp Mole Frac (Hydrogen)	0.3360	0.5288	0.5288	0.5288	0.5288
Comp Mole Frac (CO)	0.2199	0.0272	0.0272	0.0272	0.0272
Comp Mole Frac (CO2)	0.1727	0.3655	0.3655	0.3655	0.3655
Comp Mole Frac (H2O)	0.2529	0.0601	0.0601	0.0601	0.0601
Comp Mole Frac (Methane)	0.0085	0.0085	0.0085	0.0085	0.0085
Comp Mole Frac (Ethane)	0.0000	0.0000	0.0000	0.0000	0.0000
Comp Mole Frac (Ethylene)	0.0000	0.0000	0.0000	0.0000	0.0000
Comp Mole Frac (Propane)	0.0000	0.0000	0.0000	0.0000	0.0000
Comp Mole Frac (Benzene)	0.0000	0.0000	0.0000	0.0000	0.0000
Comp Mole Frac (Nitrogen)	0.0083	0.0083	0.0083	0.0083	0.0083
Comp Mole Frac (Oxygen)	0.0000	0.0000	0.0000	0.0000	0.0000
Comp Mole Frac (Ammonia)	0.0014	0.0014	0.0014	0.0014	0.0014
Comp Mole Frac (HCN)	0.0000	0.0000	0.0000	0.0000	0.0000
Comp Mole Frac (H2S)	0.0002	0.0002	0.0002	0.0002	0.0002

* Specified by user.

Workbook: Case (Main) (continued)

PSA 5d All Streams (continued)

Name	CSG	CO2 Ex	Fur Oxy	Flue gas	KOF
Vapour Fraction	1.0000 *	1.0000 *	1.0000	1.0000	0.0000
Temperature (C)	93.33 *	93.33 *	15.56 *	121.1 *	121.1
Pressure (kPa)	413.7 *	413.7 *	144.8 *	103.4 *	103.4
Molar Flow (kgmole/h)	649.9	886.3	225.4 *	1010	0.0000
Mass Flow (kg/h)	1310	2.848e+004	7025	3.551e+004	0.0000
Liquid Volume Flow (m3/h)	18.76	38.98	6.654	41.50	0.0000
Heat Flow (kJ/h)	1.267e+006	-2.470e+008	-6.539e+004	-3.070e+008	0.0000
Molar Enthalpy (kJ/kgmole)	1949	-2.786e+005	-290.0	-3.040e+005	-2.778e+005
Comp Mole Frac (BIOMASS*)	0.0000	0.0000	0.0000 *	0.0000	0.0000
Comp Mole Frac (Hydrogen)	1.0000	0.1833	0.0000 *	0.0000	0.0000
Comp Mole Frac (CO)	0.0000	0.0471	0.0000 *	0.0000	0.0000
Comp Mole Frac (CO2)	0.0000	0.6336	0.0000 *	0.6104	0.0007
Comp Mole Frac (H2O)	0.0000	0.1041	0.0000 *	0.2783	0.9986
Comp Mole Frac (Methane)	0.0000	0.0148	0.0000 *	0.0000	0.0000
Comp Mole Frac (Ethane)	0.0000	0.0000	0.0000 *	0.0000	0.0000
Comp Mole Frac (Ethylene)	0.0000	0.0000	0.0000 *	0.0000	0.0000
Comp Mole Frac (Propane)	0.0000	0.0000	0.0000 *	0.0000	0.0000
Comp Mole Frac (Benzene)	0.0000	0.0000	0.0000 *	0.0000	0.0000
Comp Mole Frac (Nitrogen)	0.0000	0.0144	0.2100 *	0.0595	0.0000
Comp Mole Frac (Oxygen)	0.0000	0.0000	0.7900 *	0.0493	0.0000
Comp Mole Frac (Ammonia)	0.0000	0.0025	0.0000 *	0.0022	0.0007
Comp Mole Frac (HCN)	0.0000	0.0000	0.0000 *	0.0000	0.0000
Comp Mole Frac (H2S)	0.0000	0.0003	0.0000 *	0.0003	0.0000

Name	Dryer Heat	G Q	Ref QE	SMC Q	S Q
Vapour Fraction	---	---	---	---	---
Temperature (C)	---	---	---	---	---
Pressure (kPa)	---	---	---	---	---
Molar Flow (kgmole/h)	---	---	---	---	---
Mass Flow (kg/h)	---	---	---	---	---
Liquid Volume Flow (m3/h)	---	---	---	---	---
Heat Flow (kJ/h)	4.584e+007	---	2.481e+007	1.906e+007	-1.206e+007
Molar Enthalpy (kJ/kgmole)	---	---	---	---	---
Comp Mole Frac (BIOMASS*)	---	---	---	---	---
Comp Mole Frac (Hydrogen)	---	---	---	---	---
Comp Mole Frac (CO)	---	---	---	---	---
Comp Mole Frac (CO2)	---	---	---	---	---
Comp Mole Frac (H2O)	---	---	---	---	---
Comp Mole Frac (Methane)	---	---	---	---	---
Comp Mole Frac (Ethane)	---	---	---	---	---
Comp Mole Frac (Ethylene)	---	---	---	---	---
Comp Mole Frac (Propane)	---	---	---	---	---
Comp Mole Frac (Benzene)	---	---	---	---	---
Comp Mole Frac (Nitrogen)	---	---	---	---	---
Comp Mole Frac (Oxygen)	---	---	---	---	---
Comp Mole Frac (Ammonia)	---	---	---	---	---
Comp Mole Frac (HCN)	---	---	---	---	---
Comp Mole Frac (H2S)	---	---	---	---	---

Workbook: Case (Main) (continued)

PSA 5d All Streams (continued)

Name	SGCQ	SL Cond	CDR Q	FH Q	PSA P
Vapour Fraction	—	—	—	—	—
Temperature (C)	—	—	—	—	—
Pressure (kPa)	—	—	—	—	—
Molar Flow (kgmole/h)	—	—	—	—	—
Mass Flow (kg/h)	—	—	—	—	—
Liquid Volume Flow (m3/h)	—	—	—	—	—
Heat Flow (kJ/h)	7.345e+006	0.0000	-6.979e+006	5.995e+007	6.973e+006
Molar Enthalpy (kJ/kgmole)	—	—	—	—	—
Comp Mole Frac (BIOMASS*)	—	—	—	—	—
Comp Mole Frac (Hydrogen)	—	—	—	—	—
Comp Mole Frac (CO)	—	—	—	—	—
Comp Mole Frac (CO2)	—	—	—	—	—
Comp Mole Frac (H2O)	—	—	—	—	—
Comp Mole Frac (Methane)	—	—	—	—	—
Comp Mole Frac (Ethane)	—	—	—	—	—
Comp Mole Frac (Ethylene)	—	—	—	—	—
Comp Mole Frac (Propane)	—	—	—	—	—
Comp Mole Frac (Benzene)	—	—	—	—	—
Comp Mole Frac (Nitrogen)	—	—	—	—	—
Comp Mole Frac (Oxygen)	—	—	—	—	—
Comp Mole Frac (Ammonia)	—	—	—	—	—
Comp Mole Frac (HCN)	—	—	—	—	—
Comp Mole Frac (H2S)	—	—	—	—	—

* Specified by user.

Appendix E – Switchgrass Process Design and Streams

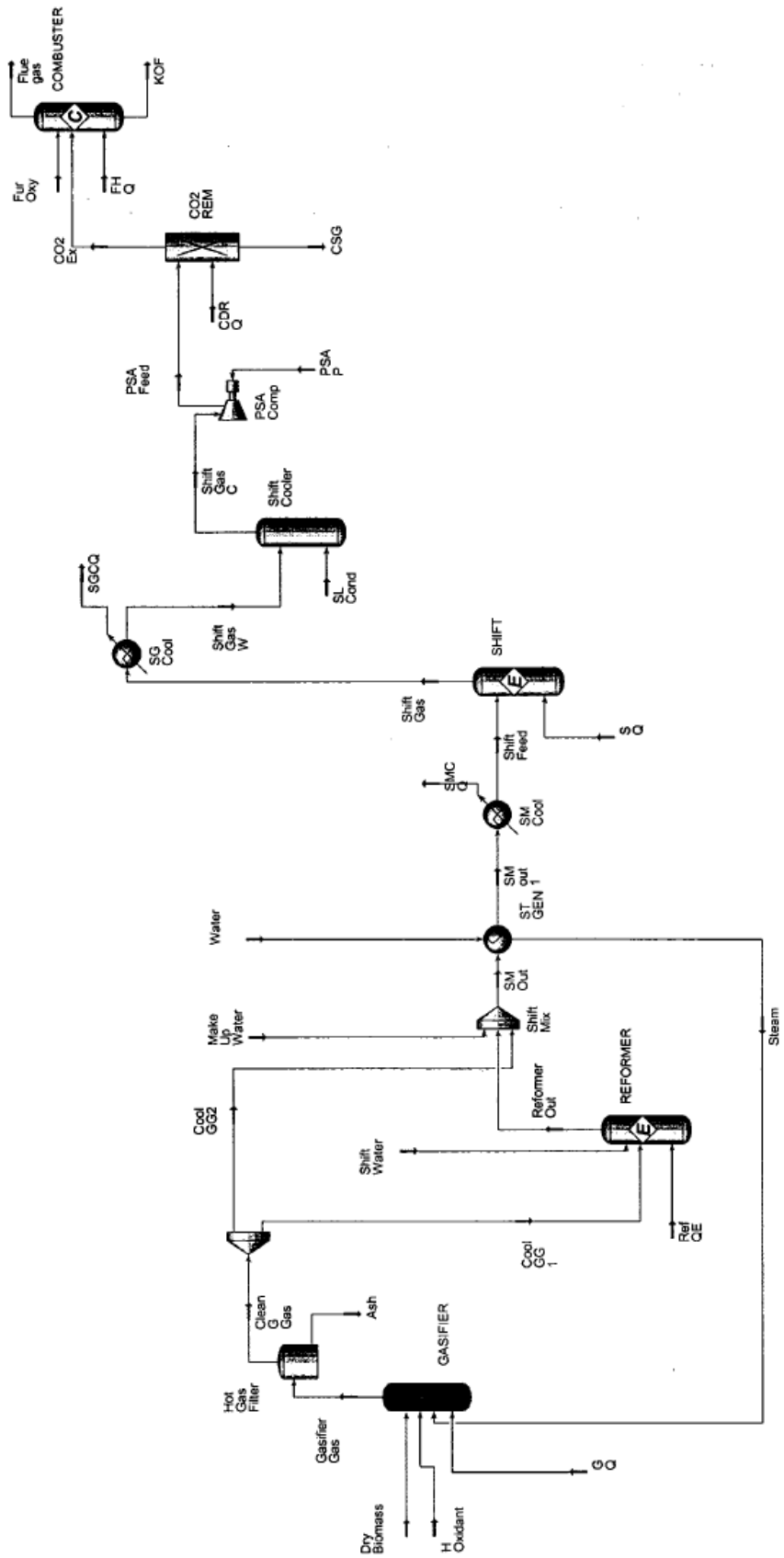
Flue gas
COMBUSTER
KOF
Fur Oxy
FH Q
CO2 Ex
CO2 REM
CSG
CDR Q
PSA Feed
PSA P
PSA Comp
Shift Gas C
Shift Cooler
SGCQ
SG Cool
SL Cond
Shift Gas W
SHIFT
Shift Gas
Shift Feed
SQ
SMC Q
SM Cool
SM out 1
ST GEN 1
Water
SM Out
Make Up Water
Shift Mix
Steam
Reformer Out
REFORMER
Cool GG2
Shift Water
Ref QE
Cool GG 1
Clean G Gas
Ash
GASIFIER
Hot Gas Filter
Gasifier Gas
GQ
Dry Biomass
H Oxidant

HYPROTECH LIFECYCLE INNOVATION

Institute of Gas Technology
Calgary, Alberta
CANADA

Case Name: C:\Documents and Settings\zabransky\Simu Programs\HYSYS 2.4.1
Unit Set: SI
Date/Time: Thu Dec 05 15:28:34 2002

Workbook: Case (Main)

PSA switchd All

Name	Dry Biomass	H Oxidant	Steam	Gasifier Gas	Ash
Vapour Fraction	0.0000 *	1.0000	1.0000	1.0000	0.0000
Temperature (C)	15.56 *	315.6 *	260.0 *	871.1 *	871.1
Pressure (kPa)	310.3 *	792.9 *	758.4 *	792.9 *	792.9
Molar Flow (kgmole/h)	208.3	170.5	291.3	1349 *	0.0000
Mass Flow (kg/h)	2.083e+004 *	5376 *	5249	3.063e+004	0.0000
Liquid Volume Flow (m3/h)	21.67	4.817	5.259	47.82	0.0000
Heat Flow (kJ/h)	-1.120e+006	7.063e+005	-6.794e+007	-2.010e+008	0.0000
Molar Enthalpy (kJ/kgmole)	-5378	4143	-2.332e+005	-1.490e+005	-1.490e+005
Comp Mole Frac (BIOMASS*)	1.0000 *	0.0000 *	0.0000	0.0000 *	0.0000
Comp Mole Frac (Hydrogen)	0.0000 *	0.0000 *	0.0000	0.2043 *	0.2043
Comp Mole Frac (CO)	0.0000 *	0.0000 *	0.0000	0.1779 *	0.1779
Comp Mole Frac (CO2)	0.0000 *	0.0000 *	0.0000	0.2303 *	0.2303
Comp Mole Frac (H2O)	0.0000 *	0.0196 *	1.0000	0.2736 *	0.2736
Comp Mole Frac (Methane)	0.0000 *	0.0000 *	0.0000	0.0862 *	0.0862
Comp Mole Frac (Ethane)	0.0000 *	0.0000 *	0.0000	0.0043 *	0.0043
Comp Mole Frac (Ethylene)	0.0000 *	0.0000 *	0.0000	0.0048 *	0.0048
Comp Mole Frac (Propane)	0.0000 *	0.0000 *	0.0000	0.0000 *	0.0000
Comp Mole Frac (Benzene)	0.0000 *	0.0000 *	0.0000	0.0030 *	0.0030
Comp Mole Frac (Nitrogen)	0.0000 *	0.0490 *	0.0000	0.0087 *	0.0087
Comp Mole Frac (Oxygen)	0.0000 *	0.9314 *	0.0000	0.0000 *	0.0000
Comp Mole Frac (Ammonia)	0.0000 *	0.0000 *	0.0000	0.0065 *	0.0065
Comp Mole Frac (HCN)	0.0000 *	0.0000 *	0.0000	0.0000 *	0.0000
Comp Mole Frac (H2S)	0.0000 *	0.0000 *	0.0000	0.0004 *	0.0004

Name	Clean G Gas	Cool GG 1	Cool GG2	Shift Water	Reformer Out
Vapour Fraction	1.0000	1.0000	1.0000	0.0000	1.0000
Temperature (C)	871.1	871.1	871.1	15.56 *	815.6 *
Pressure (kPa)	792.9	792.9	792.9	689.5 *	689.5
Molar Flow (kgmole/h)	1349	1349	0.0000	0.0000 *	1602
Mass Flow (kg/h)	3.063e+004	3.063e+004	0.0000	0.0000	3.063e+004
Liquid Volume Flow (m3/h)	47.82	47.82	0.0000	0.0000	52.46
Heat Flow (kJ/h)	-2.010e+008	-2.010e+008	0.0000	0.0000	-1.753e+008
Molar Enthalpy (kJ/kgmole)	-1.490e+005	-1.490e+005	-1.490e+005	-2.861e+005	-1.094e+005
Comp Mole Frac (BIOMASS*)	0.0000	0.0000	0.0000	0.0000 *	0.0000
Comp Mole Frac (Hydrogen)	0.2043	0.2043	0.2043	0.0000 *	0.3539
Comp Mole Frac (CO)	0.1779	0.1779	0.1779	0.0000 *	0.2775
Comp Mole Frac (CO2)	0.2303	0.2303	0.2303	0.0000 *	0.1523
Comp Mole Frac (H2O)	0.2736	0.2736	0.2736	1.0000 *	0.1861
Comp Mole Frac (Methane)	0.0862	0.0862	0.0862	0.0000 *	0.0171
Comp Mole Frac (Ethane)	0.0043	0.0043	0.0043	0.0000 *	0.0000
Comp Mole Frac (Ethylene)	0.0048	0.0048	0.0048	0.0000 *	0.0000
Comp Mole Frac (Propane)	0.0000	0.0000	0.0000	0.0000 *	0.0000
Comp Mole Frac (Benzene)	0.0030	0.0030	0.0030	0.0000 *	0.0000
Comp Mole Frac (Nitrogen)	0.0087	0.0087	0.0087	0.0000 *	0.0073
Comp Mole Frac (Oxygen)	0.0000	0.0000	0.0000	0.0000 *	0.0000
Comp Mole Frac (Ammonia)	0.0065	0.0065	0.0065	0.0000 *	0.0055
Comp Mole Frac (HCN)	0.0000	0.0000	0.0000	0.0000 *	0.0000
Comp Mole Frac (H2S)	0.0004	0.0004	0.0004	0.0000 *	0.0003

Licensed to: Institute of Gas Technology
* Specified by user.

Workbook: Case (Main) (continued)

PSA switchd All (continued)

Name	Make Up Water	SM Out	SM out 1	Water	Shift Feed
Vapour Fraction	0.0000	1.0000	1.0000	0.0000	1.0000
Temperature (C)	48.89 *	600.3	362.8	15.56 *	232.2 *
Pressure (kPa)	792.9 *	689.5	620.5	827.4 *	620.5 *
Molar Flow (kgmole/h)	204.1 *	1806	1806	291.3	1806
Mass Flow (kg/h)	3677	3.431e+004	3.431e+004	5249 *	3.431e+004
Liquid Volume Flow (m3/h)	3.685	56.15	56.15	5.259	56.15
Heat Flow (kJ/h)	-5.788e+007	-2.332e+008	-2.486e+008	-8.336e+007	-2.567e+008
Molar Enthalpy (kJ/kgmole)	-2.835e+005	-1.291e+005	-1.377e+005	-2.861e+005	-1.421e+005
Comp Mole Frac (BIOMASS*)	0.0000 *	0.0000	0.0000	0.0000 *	0.0000
Comp Mole Frac (Hydrogen)	0.0000 *	0.3139	0.3139	0.0000 *	0.3139
Comp Mole Frac (CO)	0.0000 *	0.2461	0.2461	0.0000 *	0.2461
Comp Mole Frac (CO2)	0.0000 *	0.1351	0.1351	0.0000 *	0.1351
Comp Mole Frac (H2O)	1.0000 *	0.2781	0.2781	1.0000 *	0.2781
Comp Mole Frac (Methane)	0.0000 *	0.0151	0.0151	0.0000 *	0.0151
Comp Mole Frac (Ethane)	0.0000 *	0.0000	0.0000	0.0000 *	0.0000
Comp Mole Frac (Ethylene)	0.0000 *	0.0000	0.0000	0.0000 *	0.0000
Comp Mole Frac (Propane)	0.0000 *	0.0000	0.0000	0.0000 *	0.0000
Comp Mole Frac (Benzene)	0.0000 *	0.0000	0.0000	0.0000 *	0.0000
Comp Mole Frac (Nitrogen)	0.0000 *	0.0065	0.0065	0.0000 *	0.0065
Comp Mole Frac (Oxygen)	0.0000 *	0.0000	0.0000	0.0000 *	0.0000
Comp Mole Frac (Ammonia)	0.0000 *	0.0049	0.0049	0.0000 *	0.0049
Comp Mole Frac (HCN)	0.0000 *	0.0000	0.0000	0.0000 *	0.0000
Comp Mole Frac (H2S)	0.0000 *	0.0003	0.0003	0.0000 *	0.0003

Name	Shift Gas	Shift Gas W	Shift Gas C	PSA Feed	CSG
Vapour Fraction	1.0000	1.0000	1.0000	1.0000	1.0000 *
Temperature (C)	232.2 *	93.33 *	93.33 *	226.6	93.33 *
Pressure (kPa)	551.6	551.6	551.6	1482 *	413.7 *
Molar Flow (kgmole/h)	1806	1806	1806	1806	770.1
Mass Flow (kg/h)	3.431e+004	3.431e+004	3.431e+004	3.431e+004	1553
Liquid Volume Flow (m3/h)	67.66	67.66	67.66	67.66	22.22
Heat Flow (kJ/h)	-2.728e+008	-2.814e+008	-2.814e+008	-2.732e+008	1.501e+006
Molar Enthalpy (kJ/kgmole)	-1.511e+005	-1.558e+005	-1.558e+005	-1.513e+005	1949
Comp Mole Frac (BIOMASS*)	0.0000	0.0000	0.0000	0.0000	0.0000
Comp Mole Frac (Hydrogen)	0.5330	0.5330	0.5330	0.5330	1.0000
Comp Mole Frac (CO)	0.0270	0.0270	0.0270	0.0270	0.0000
Comp Mole Frac (CO2)	0.3542	0.3542	0.3542	0.3542	0.0000
Comp Mole Frac (H2O)	0.0590	0.0590	0.0590	0.0590	0.0000
Comp Mole Frac (Methane)	0.0151	0.0151	0.0151	0.0151	0.0000
Comp Mole Frac (Ethane)	0.0000	0.0000	0.0000	0.0000	0.0000
Comp Mole Frac (Ethylene)	0.0000	0.0000	0.0000	0.0000	0.0000
Comp Mole Frac (Propane)	0.0000	0.0000	0.0000	0.0000	0.0000
Comp Mole Frac (Benzene)	0.0000	0.0000	0.0000	0.0000	0.0000
Comp Mole Frac (Nitrogen)	0.0065	0.0065	0.0065	0.0065	0.0000
Comp Mole Frac (Oxygen)	0.0000	0.0000	0.0000	0.0000	0.0000
Comp Mole Frac (Ammonia)	0.0049	0.0049	0.0049	0.0049	0.0000
Comp Mole Frac (HCN)	0.0000	0.0000	0.0000	0.0000	0.0000
Comp Mole Frac (H2S)	0.0003	0.0003	0.0003	0.0003	0.0000

* Specified by user.

Workbook: Case (Main) (continued)

PSA switchd All (continued)

Name	CO2 Ex	Fur Oxy	Flue gas	KOF	G Q
Vapour Fraction	1.0000 *	1.0000	1.0000	0.0000	—
Temperature (C)	93.33 *	15.56 *	121.1 *	121.1	—
Pressure (kPa)	413.7 *	144.8 *	103.4 *	103.4	—
Molar Flow (kgmole/h)	1036	225.4 *	1141	0.0000	—
Mass Flow (kg/h)	3.276e+004	7025	3.978e+004	0.0000	—
Liquid Volume Flow (m3/h)	45.43	6.654	46.95	0.0000	—
Heat Flow (kJ/h)	-2.829e+008	-6.539e+004	-3.635e+008	0.0000	—
Molar Enthalpy (kJ/kgmole)	-2.732e+005	-290.0	-3.187e+005	-2.775e+005	—
Comp Mole Frac (BIOMASS*)	0.0000	0.0000 *	0.0000	0.0000	—
Comp Mole Frac (Hydrogen)	0.1859	0.0000 *	0.0000	0.0000	—
Comp Mole Frac (CO)	0.0471	0.0000 *	0.0000	0.0000	—
Comp Mole Frac (CO2)	0.6175	0.0000 *	0.6275	0.0006	—
Comp Mole Frac (H2O)	0.1028	0.0000 *	0.3101	0.9971	—
Comp Mole Frac (Methane)	0.0264	0.0000 *	0.0000	0.0000	—
Comp Mole Frac (Ethane)	0.0000	0.0000 *	0.0000	0.0000	—
Comp Mole Frac (Ethylene)	0.0000	0.0000 *	0.0000	0.0000	—
Comp Mole Frac (Propane)	0.0000	0.0000 *	0.0000	0.0000	—
Comp Mole Frac (Benzene)	0.0000	0.0000 *	0.0000	0.0000	—
Comp Mole Frac (Nitrogen)	0.0113	0.2100 *	0.0518	0.0000	—
Comp Mole Frac (Oxygen)	0.0000	0.7900 *	0.0024	0.0000	—
Comp Mole Frac (Ammonia)	0.0085	0.0000 *	0.0077	0.0022	—
Comp Mole Frac (HCN)	0.0000	0.0000 *	0.0000	0.0000	—
Comp Mole Frac (H2S)	0.0005	0.0000 *	0.0005	0.0000	—

Name	Ref QE	SMC Q	S Q	SGCQ	SL Cond
Vapour Fraction	—	—	—	—	—
Temperature (C)	—	—	—	—	—
Pressure (kPa)	—	—	—	—	—
Molar Flow (kgmole/h)	—	—	—	—	—
Mass Flow (kg/h)	—	—	—	—	—
Liquid Volume Flow (m3/h)	—	—	—	—	—
Heat Flow (kJ/h)	2.570e+007	8.070e+006	-1.612e+007	8.626e+006	0.0000
Molar Enthalpy (kJ/kgmole)	—	—	—	—	—
Comp Mole Frac (BIOMASS*)	—	—	—	—	—
Comp Mole Frac (Hydrogen)	—	—	—	—	—
Comp Mole Frac (CO)	—	—	—	—	—
Comp Mole Frac (CO2)	—	—	—	—	—
Comp Mole Frac (H2O)	—	—	—	—	—
Comp Mole Frac (Methane)	—	—	—	—	—
Comp Mole Frac (Ethane)	—	—	—	—	—
Comp Mole Frac (Ethylene)	—	—	—	—	—
Comp Mole Frac (Propane)	—	—	—	—	—
Comp Mole Frac (Benzene)	—	—	—	—	—
Comp Mole Frac (Nitrogen)	—	—	—	—	—
Comp Mole Frac (Oxygen)	—	—	—	—	—
Comp Mole Frac (Ammonia)	—	—	—	—	—
Comp Mole Frac (HCN)	—	—	—	—	—
Comp Mole Frac (H2S)	—	—	—	—	—

* Specified by user.

Workbook: Case (Main) (continued)

PSA switchd All (continued)

Name	CDR Q	FH Q	PSA P		
Vapour Fraction	—	—	—		
Temperature (C)	—	—	—		
Pressure (kPa)	—	—	—		
Molar Flow (kgmole/h)	—	—	—		
Mass Flow (kg/h)	—	—	—		
Liquid Volume Flow (m3/h)	—	—	—		
Heat Flow (kJ/h)	-8.207e+006	8.047e+007	8.200e+006		
Molar Enthalpy (kJ/kgmole)	—	—	—		
Comp Mole Frac (BIOMASS*)	—	—	—		
Comp Mole Frac (Hydrogen)	—	—	—		
Comp Mole Frac (CO)	—	—	—		
Comp Mole Frac (CO2)	—	—	—		
Comp Mole Frac (H2O)	—	—	—		
Comp Mole Frac (Methane)	—	—	—		
Comp Mole Frac (Ethane)	—	—	—		
Comp Mole Frac (Ethylene)	—	—	—		
Comp Mole Frac (Propane)	—	—	—		
Comp Mole Frac (Benzene)	—	—	—		
Comp Mole Frac (Nitrogen)	—	—	—		
Comp Mole Frac (Oxygen)	—	—	—		
Comp Mole Frac (Ammonia)	—	—	—		
Comp Mole Frac (HCN)	—	—	—		
Comp Mole Frac (H2S)	—	—	—		

* Specified by user.

Appendix F – Nutshell Mix Process Design and Streams

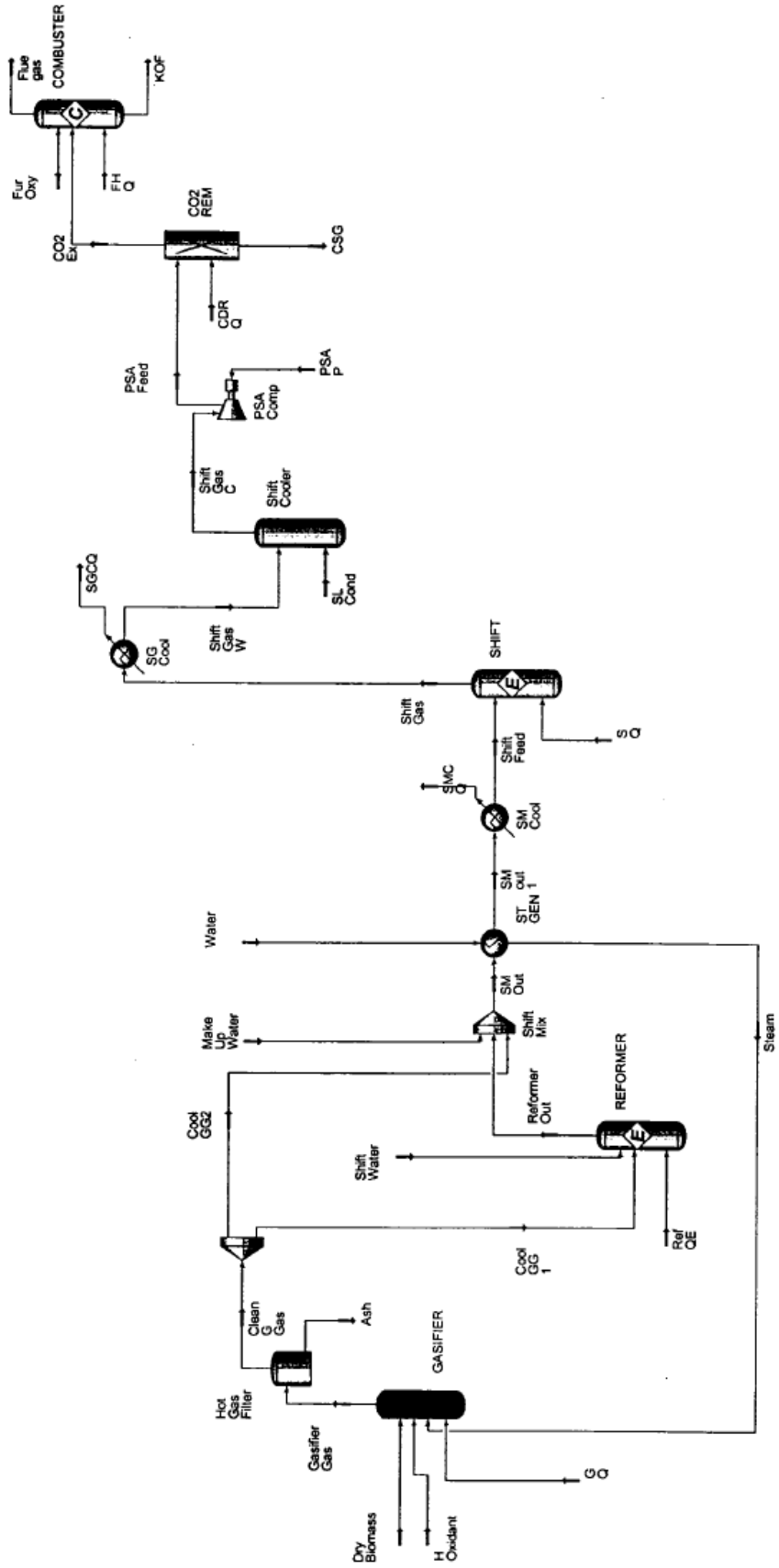
Flue gas
COMBUSTER
KOF
Fur Oxy
FH Q
CO2 REM
CO2 Ex
CSG
CDR Q
PSA Feed
PSA P
PSA Comp
Shift Gas C
Shift Cooler
SG/CQ
SL Cond
SG Cool
Shift Gas W
SHIFT
Shift Gas
SQ
Shift Feed
SMC Q
SM Cool
SM out 1
ST GEN 1
Water
SM Out
Make Up Water
Shift Mix
Steam
Cool GG2
Reformer Out
REFORMER
Shift Water
Ref QE
Cool GG 1
Clean G Gas
Ash
GASIFIER
Hot Gas Filter
Gasifier Gas
GQ
Dry Biomass
H Oxidant

Institute of Gas Technology
Calgary, Alberta
CANADA

Case Name: C:\Documents and Settings\zabransky\Simu Programs\HYSYS 2.4.1
Unit Set: SI
Date/Time: Thu Dec 05 15:29:39 2002

Workbook: Case (Main)

PSAalmixd All

Name	Dry Biomass	Gasifier Gas	KO 1	Shift Gas	KO 2
Vapour Fraction	0.0000 *	1.0000	—	1.0000	0.0000
Temperature (C)	15.56 *	871.1 *	—	232.2 *	232.2
Pressure (kPa)	310.3 *	792.9 *	—	551.6	551.6
Molar Flow (kgmole/h)	208.3	1364 *	—	1860	0.0000
Mass Flow (kg/h)	2.083e+004 *	2.998e+004	—	3.456e+004	0.0000
Liquid Volume Flow (m3/h)	21.67	48.17	—	69.37	0.0000
Heat Flow (kJ/h)	-1.120e+006	-1.883e+008	—	-2.739e+008	0.0000
Molar Enthalpy (kJ/kgmole)	-5378	-1.380e+005	—	-1.473e+005	-2.632e+005
Comp Mole Frac (BIOMASS*)	1.0000 *	0.0000 *	—	0.0000	0.0000
Comp Mole Frac (Hydrogen)	0.0000 *	0.2287 *	—	0.5408	0.0123
Comp Mole Frac (CO)	0.0000 *	0.1982 *	—	0.0267	0.0005
Comp Mole Frac (CO2)	0.0000 *	0.2097 *	—	0.3440	0.0272
Comp Mole Frac (H2O)	0.0000 *	0.2504 *	—	0.0588	0.9413
Comp Mole Frac (Methane)	0.0000 *	0.0861 *	—	0.0190	0.0001
Comp Mole Frac (Ethane)	0.0000 *	0.0041 *	—	0.0000	0.0000
Comp Mole Frac (Ethylene)	0.0000 *	0.0048 *	—	0.0000	0.0000
Comp Mole Frac (Propane)	0.0000 *	0.0000 *	—	0.0000	0.0000
Comp Mole Frac (Benzene)	0.0000 *	0.0032 *	—	0.0000	0.0000
Comp Mole Frac (Nitrogen)	0.0000 *	0.0073 *	—	0.0054	0.0001
Comp Mole Frac (Oxygen)	0.0000 *	0.0000 *	—	0.0000	0.0000
Comp Mole Frac (Ammonia)	0.0000 *	0.0074 *	—	0.0054	0.0184
Comp Mole Frac (HCN)	0.0000 *	0.0000 *	—	0.0000	0.0000
Comp Mole Frac (H2S)	0.0000 *	0.0000 *	—	0.0000	0.0000

Name	Cool GG 1	Reformer Out	KO 3	CSG	CO2 Ex
Vapour Fraction	1.0000	1.0000	0.0000	1.0000 *	1.0000 *
Temperature (C)	871.1	815.6 *	815.6	93.33 *	93.33 *
Pressure (kPa)	792.9	689.5	689.5	413.7 *	413.7 *
Molar Flow (kgmole/h)	1364	1606	0.0000	804.7	1055
Mass Flow (kg/h)	2.998e+004	2.998e+004	0.0000	1622	3.294e+004
Liquid Volume Flow (m3/h)	48.17	52.68	0.0000	23.22	46.15
Heat Flow (kJ/h)	-1.883e+008	-1.641e+008	0.0000	1.568e+006	-2.844e+008
Molar Enthalpy (kJ/kgmole)	-1.380e+005	-1.022e+005	-1.022e+005	1949	-2.695e+005
Comp Mole Frac (BIOMASS*)	0.0000	0.0000	0.0000	0.0000	0.0000
Comp Mole Frac (Hydrogen)	0.2287	0.3673	0.3673	1.0000	0.1907
Comp Mole Frac (CO)	0.1982	0.2900	0.2900	0.0000	0.0471
Comp Mole Frac (CO2)	0.2097	0.1393	0.1393	0.0000	0.6063
Comp Mole Frac (H2O)	0.2504	0.1690	0.1690	0.0000	0.1036
Comp Mole Frac (Methane)	0.0861	0.0220	0.0220	0.0000	0.0334
Comp Mole Frac (Ethane)	0.0041	0.0000	0.0000	0.0000	0.0000
Comp Mole Frac (Ethylene)	0.0048	0.0000	0.0000	0.0000	0.0000
Comp Mole Frac (Propane)	0.0000	0.0000	0.0000	0.0000	0.0000
Comp Mole Frac (Benzene)	0.0032	0.0000	0.0000	0.0000	0.0000
Comp Mole Frac (Nitrogen)	0.0073	0.0062	0.0062	0.0000	0.0095
Comp Mole Frac (Oxygen)	0.0000	0.0000	0.0000	0.0000	0.0000
Comp Mole Frac (Ammonia)	0.0074	0.0062	0.0062	0.0000	0.0095
Comp Mole Frac (HCN)	0.0000	0.0000	0.0000	0.0000	0.0000
Comp Mole Frac (H2S)	0.0000	0.0000	0.0000	0.0000	0.0000

Licensed to: Institute of Gas Technology
* Specified by user.

Workbook: Case (Main) (continued)

PSAalmixd All (continued)

Name	Cool GG2	Shift Feed	SM Out	Shift Water	H Oxidant
Vapour Fraction	1.0000	1.0000	1.0000	0.0000	1.0000
Temperature (C)	871.1	232.2 *	553.3	15.56 *	315.6 *
Pressure (kPa)	792.9	620.5 *	689.5	689.5 *	792.9 *
Molar Flow (kgmole/h)	0.0000	1860	1860	0.0000 *	135.0
Mass Flow (kg/h)	0.0000	3.456e+004	3.456e+004	0.0000	4258 *
Liquid Volume Flow (m3/h)	0.0000	57.27	57.27	0.0000	3.815
Heat Flow (kJ/h)	0.0000	-2.570e+008	-2.361e+008	0.0000	5.594e+005
Molar Enthalpy (kJ/kgmole)	-1.380e+005	-1.382e+005	-1.269e+005	-2.861e+005	4143
Comp Mole Frac (BIOMASS*)	0.0000	0.0000	0.0000	0.0000 *	0.0000 *
Comp Mole Frac (Hydrogen)	0.2287	0.3171	0.3171	0.0000 *	0.0000 *
Comp Mole Frac (CO)	0.1982	0.2504	0.2504	0.0000 *	0.0000 *
Comp Mole Frac (CO2)	0.2097	0.1203	0.1203	0.0000 *	0.0000 *
Comp Mole Frac (H2O)	0.2504	0.2825	0.2825	1.0000 *	0.0196 *
Comp Mole Frac (Methane)	0.0861	0.0190	0.0190	0.0000 *	0.0000 *
Comp Mole Frac (Ethane)	0.0041	0.0000	0.0000	0.0000 *	0.0000 *
Comp Mole Frac (Ethylene)	0.0048	0.0000	0.0000	0.0000 *	0.0000 *
Comp Mole Frac (Propane)	0.0000	0.0000	0.0000	0.0000 *	0.0000 *
Comp Mole Frac (Benzene)	0.0032	0.0000	0.0000	0.0000 *	0.0000 *
Comp Mole Frac (Nitrogen)	0.0073	0.0054	0.0054	0.0000 *	0.0490 *
Comp Mole Frac (Oxygen)	0.0000	0.0000	0.0000	0.0000 *	0.9314 *
Comp Mole Frac (Ammonia)	0.0074	0.0054	0.0054	0.0000 *	0.0000 *
Comp Mole Frac (HCN)	0.0000	0.0000	0.0000	0.0000 *	0.0000 *
Comp Mole Frac (H2S)	0.0000	0.0000	0.0000	0.0000 *	0.0000 *

Name	Shift Gas C	PSA Feed	Shift Gas W	Shift L	Water
Vapour Fraction	1.0000	1.0000	1.0000	0.0000	0.0000
Temperature (C)	93.33 *	227.0	93.33 *	93.33	15.56 *
Pressure (kPa)	551.6	1482 *	551.6	551.6	827.4 *
Molar Flow (kgmole/h)	1860	1860	1860	0.0000	294.6
Mass Flow (kg/h)	3.456e+004	3.456e+004	3.456e+004	0.0000	5307 *
Liquid Volume Flow (m3/h)	69.37	69.37	69.37	0.0000	5.318
Heat Flow (kJ/h)	-2.828e+008	-2.743e+008	-2.828e+008	0.0000	-8.429e+007
Molar Enthalpy (kJ/kgmole)	-1.520e+005	-1.475e+005	-1.520e+005	-2.788e+005	-2.861e+005
Comp Mole Frac (BIOMASS*)	0.0000	0.0000	0.0000	0.0000	0.0000 *
Comp Mole Frac (Hydrogen)	0.5408	0.5408	0.5408	0.0000	0.0000 *
Comp Mole Frac (CO)	0.0267	0.0267	0.0267	0.0000	0.0000 *
Comp Mole Frac (CO2)	0.3440	0.3440	0.3440	0.0008	0.0000 *
Comp Mole Frac (H2O)	0.0588	0.0588	0.0588	0.9927	1.0000 *
Comp Mole Frac (Methane)	0.0190	0.0190	0.0190	0.0000	0.0000 *
Comp Mole Frac (Ethane)	0.0000	0.0000	0.0000	0.0000	0.0000 *
Comp Mole Frac (Ethylene)	0.0000	0.0000	0.0000	0.0000	0.0000 *
Comp Mole Frac (Propane)	0.0000	0.0000	0.0000	0.0000	0.0000 *
Comp Mole Frac (Benzene)	0.0000	0.0000	0.0000	0.0000	0.0000 *
Comp Mole Frac (Nitrogen)	0.0054	0.0054	0.0054	0.0000	0.0000 *
Comp Mole Frac (Oxygen)	0.0000	0.0000	0.0000	0.0000	0.0000 *
Comp Mole Frac (Ammonia)	0.0054	0.0054	0.0054	0.0064	0.0000 *
Comp Mole Frac (HCN)	0.0000	0.0000	0.0000	0.0000	0.0000 *
Comp Mole Frac (H2S)	0.0000	0.0000	0.0000	0.0000	0.0000 *

Workbook: Case (Main) (continued)

PSAalmixd All (continued)

Name	Steam	SM out 1	Flue gas	KOF	Fur Oxy
Vapour Fraction	1.0000	1.0000	1.0000	0.0000	1.0000
Temperature (C)	260.0 *	316.3	121.1 *	121.1	15.56 *
Pressure (kPa)	758.4 *	620.5	103.4 *	103.4	144.8 *
Molar Flow (kgmole/h)	294.6	1860	1194	0.0000	264.0 *
Mass Flow (kg/h)	5307	3.456e+004	4.116e+004	0.0000	8227
Liquid Volume Flow (m3/h)	5.318	57.27	48.43	0.0000	7.792
Heat Flow (kJ/h)	-6.870e+007	-2.517e+008	-3.734e+008	0.0000	-7.657e+004
Molar Enthalpy (kJ/kgmole)	-2.332e+005	-1.353e+005	-3.128e+005	-2.774e+005	-290.0
Comp Mole Frac (BIOMASS*)	0.0000	0.0000	0.0000	0.0000	0.0000 *
Comp Mole Frac (Hydrogen)	0.0000	0.3171	0.0000	0.0000	0.0000 *
Comp Mole Frac (CO)	0.0000	0.2504	0.0000	0.0000	0.0000 *
Comp Mole Frac (CO2)	0.0000	0.1203	0.6070	0.0006	0.0000 *
Comp Mole Frac (H2O)	1.0000	0.2825	0.3192	0.9970	0.0000 *
Comp Mole Frac (Methane)	0.0000	0.0190	0.0000	0.0000	0.0000 *
Comp Mole Frac (Ethane)	0.0000	0.0000	0.0000	0.0000	0.0000 *
Comp Mole Frac (Ethylene)	0.0000	0.0000	0.0000	0.0000	0.0000 *
Comp Mole Frac (Propane)	0.0000	0.0000	0.0000	0.0000	0.0000 *
Comp Mole Frac (Benzene)	0.0000	0.0000	0.0000	0.0000	0.0000 *
Comp Mole Frac (Nitrogen)	0.0000	0.0054	0.0548	0.0000	0.2100 *
Comp Mole Frac (Oxygen)	0.0000	0.0000	0.0106	0.0000	0.7900 *
Comp Mole Frac (Ammonia)	0.0000	0.0054	0.0084	0.0024	0.0000 *
Comp Mole Frac (HCN)	0.0000	0.0000	0.0000	0.0000	0.0000 *
Comp Mole Frac (H2S)	0.0000	0.0000	0.0000	0.0000	0.0000 *

Name	Clean G Gas	Ash	Make Up Water	G Q	S Q
Vapour Fraction	1.0000	0.0000	0.0000	—	—
Temperature (C)	871.1	871.1	48.89 *	—	—
Pressure (kPa)	792.9	792.9	792.9 *	—	—
Molar Flow (kgmole/h)	1364	0.0000	254.0 *	—	—
Mass Flow (kg/h)	2.998e+004	0.0000	4576	—	—
Liquid Volume Flow (m3/h)	48.17	0.0000	4.585	—	—
Heat Flow (kJ/h)	-1.883e+008	0.0000	-7.202e+007	—	-1.695e+007
Molar Enthalpy (kJ/kgmole)	-1.380e+005	-1.380e+005	-2.835e+005	—	—
Comp Mole Frac (BIOMASS*)	0.0000	0.0000	0.0000 *	—	—
Comp Mole Frac (Hydrogen)	0.2287	0.2287	0.0000 *	—	—
Comp Mole Frac (CO)	0.1982	0.1982	0.0000 *	—	—
Comp Mole Frac (CO2)	0.2097	0.2097	0.0000 *	—	—
Comp Mole Frac (H2O)	0.2504	0.2504	1.0000 *	—	—
Comp Mole Frac (Methane)	0.0861	0.0861	0.0000 *	—	—
Comp Mole Frac (Ethane)	0.0041	0.0041	0.0000 *	—	—
Comp Mole Frac (Ethylene)	0.0048	0.0048	0.0000 *	—	—
Comp Mole Frac (Propane)	0.0000	0.0000	0.0000 *	—	—
Comp Mole Frac (Benzene)	0.0032	0.0032	0.0000 *	—	—
Comp Mole Frac (Nitrogen)	0.0073	0.0073	0.0000 *	—	—
Comp Mole Frac (Oxygen)	0.0000	0.0000	0.0000 *	—	—
Comp Mole Frac (Ammonia)	0.0074	0.0074	0.0000 *	—	—
Comp Mole Frac (HCN)	0.0000	0.0000	0.0000 *	—	—
Comp Mole Frac (H2S)	0.0000	0.0000	0.0000 *	—	—

* Specified by user.

Workbook: Case (Main) (continued)

PSAalmixd All (continued)

Name	SMC Q	Ref QE	SGCQ	PSA P	SL Cond
Vapour Fraction	---	---	---	---	---
Temperature (C)	---	---	---	---	---
Pressure (kPa)	---	---	---	---	---
Molar Flow (kgmole/h)	---	---	---	---	---
Mass Flow (kg/h)	---	---	---	---	---
Liquid Volume Flow (m3/h)	---	---	---	---	---
Heat Flow (kJ/h)	5.298e+006	2.424e+007	8.861e+006	8.448e+006	0.0000
Molar Enthalpy (kJ/kgmole)	---	---	---	---	---
Comp Mole Frac (BIOMASS*)	---	---	---	---	---
Comp Mole Frac (Hydrogen)	---	---	---	---	---
Comp Mole Frac (CO)	---	---	---	---	---
Comp Mole Frac (CO2)	---	---	---	---	---
Comp Mole Frac (H2O)	---	---	---	---	---
Comp Mole Frac (Methane)	---	---	---	---	---
Comp Mole Frac (Ethane)	---	---	---	---	---
Comp Mole Frac (Ethylene)	---	---	---	---	---
Comp Mole Frac (Propane)	---	---	---	---	---
Comp Mole Frac (Benzene)	---	---	---	---	---
Comp Mole Frac (Nitrogen)	---	---	---	---	---
Comp Mole Frac (Oxygen)	---	---	---	---	---
Comp Mole Frac (Ammonia)	---	---	---	---	---
Comp Mole Frac (HCN)	---	---	---	---	---
Comp Mole Frac (H2S)	---	---	---	---	---

Name	CDR Q	FH Q
Vapour Fraction	---	---
Temperature (C)	---	---
Pressure (kPa)	---	---
Molar Flow (kgmole/h)	---	---
Mass Flow (kg/h)	---	---
Liquid Volume Flow (m3/h)	---	---
Heat Flow (kJ/h)	-8.456e+006	8.900e+007
Molar Enthalpy (kJ/kgmole)	---	---
Comp Mole Frac (BIOMASS*)	---	---
Comp Mole Frac (Hydrogen)	---	---
Comp Mole Frac (CO)	---	---
Comp Mole Frac (CO2)	---	---
Comp Mole Frac (H2O)	---	---
Comp Mole Frac (Methane)	---	---
Comp Mole Frac (Ethane)	---	---
Comp Mole Frac (Ethylene)	---	---
Comp Mole Frac (Propane)	---	---
Comp Mole Frac (Benzene)	---	---
Comp Mole Frac (Nitrogen)	---	---
Comp Mole Frac (Oxygen)	---	---
Comp Mole Frac (Ammonia)	---	---
Comp Mole Frac (HCN)	---	---
Comp Mole Frac (H2S)	---	---

* Specified by user.

Appendix G – Commercialization Barriers

Barriers to Commercialization of Hydrogen from Biomass

Vision

The vision being addressed is that of a centrally located gasification plant processing low-cost biomass resources into hydrogen. Hydrogen produced in this manner can be fed to large, high efficiency, stationary fuel cell power plants to produce electricity, and the electricity distributed to customers through the existing nationwide electric grid. The hydrogen itself can be transported to the customer and he can process it locally through small stationary fuel cells to produce electricity, burn it as a substitute for natural gas, or compress it into storage onboard a vehicle and use it for transportation applications. Still another alternative is to sell the hydrogen as a chemical feedstock.

Hydrogen as a Chemical Feedstock

There is a very active and growing market for hydrogen as a chemical feedstock. Hydrogen is used in a wide variety of industrial processes from hydrogenating corn oil to the manufacture of ammonia. As a chemical, hydrogen commands a price of from $5 to $15 per Gigajoule with the variation depending primarily on transportation costs.

[Note: 1.0 Gigajoule (Gj) equals 0.95 million Btu (MMBtu) so for purposes of approximation, $/Gigajoule is the equivalent of $/MMBtu.]

In 2001, 504 billion cubic feet (14 billion m^3) of hydrogen were produced for sale in the US[(1)]. This does not include the much larger amount of hydrogen produced and consumed in internal plant operations in the upgrading of petroleum. The vast majority of the hydrogen used in the chemical industry is produced by steam reforming of hydrocarbons with the principal hydrocarbon used being natural gas. As a consequence, the price for merchant hydrogen is closely tied to the cost of natural gas.

While there are no technical barriers to the use of hydrogen from biomass as a chemical feedstock, the close relationship between the price for merchant hydrogen and the cost of natural gas represent a price barrier. Hydrogen produced by steam reforming of hydrocarbons costs, on a first approximation, twice as much as the hydrocarbon feed stock from which it is produced when compared on a Gigajoule basis. So long as hydrogen can be produced on site in large industrial-scale reformers from inexpensive hydrocarbons, hydrogen from biomass will have to compete head-on in the market place with hydrogen from hydrocarbon reforming. In the mid to long-term, however, increasing crude oil and natural gas prices and tax incentives for use of renewable resources or carbon-tax penalties for CO_2 emissions can be expected to swing the economics in favor of biomass production.

Hydrogen to Electricity in Large Stationary Fuel Cells

Currently there are two developers of multi-megawatt stationary fuel cell power plants that expect to have hybrid fuel cell/turbine power plants in the market place within the next five years that can achieve better than 60% fuel to electric conversion efficiency based on the higher

heating value of hydrogen (HHV). A biomass gasifier producing hydrogen would interface well with any of these stationary fuel cells. Here the barriers to commercialization lay with the fuel cell technology. Although these fuel cell power plants are being demonstrated at the 250 kW size class and demonstrations at the multi-megawatt size class are planned for the future, and while limited numbers of fuel cell power plants are being sold for premium power applications, a market clearing price of less than $1000/kW for installed capacity has not been demonstrated. Thus while there is no technical barrier, there once again is a price barrier.

Hydrogen to Electricity in Small Local Fuel Cells

At last count there were nearly a dozen US-based fuel cell developers working on residential fuel cells. The vision here is for a fuel cell system with a built-in natural gas or propane reformer and the attendant fuel processing system needed to deliver clean, pure hydrogen to the fuel cell power plant. Nearly all of the current developers are basing their technology on proton exchange membrane (PEM) fuel cells that are relatively easy to fabricate but highly sensitive to contaminants, in particular carbon monoxide and hydrogen sulfide. As a consequence, a significant part of the costs for these small fuel cell power plants resides in the fuel processing system. What we have essentially is a small chemical plant attached to the fuel cell power plant.

A few of these developers are marketing back-up power supplies which are PEM fuel cells fueled by pure hydrogen from compressed gas cylinders. This suggests that fuel cell technology is more advanced than fuel processing technology on a small scale.

During the 1970s and 80s the United Technology Corporation, with funding from the US Government and the gas industry, had a major program underway to develop small residential and commercial power plants based on phosphoric acid fuel cell technology (PAFC). This work eventually lead to the development of the natural gas-fired 200 kW PC-25 power plant currently being marketed by UTC Fuel Cells, Inc. for premium power applications. Few remember, however, that this program began with a 7-kW residential unit and moved up to a 40-kW demonstration unit for commercial applications and finally settled on 200 kW as the smallest practical size for a PAFC fuel cell operating on natural gas. What happened is that UTC ran into the same scaling factor for the fuel processing system that the chemical industry uses to justify large-scale construction. Large fuel processing systems are cheaper to build than small fuel processing systems when measured on a standard-cubic-meter-of-hydrogen per hour basis. Since the PAFC and the PEM fuel cells share equal sensitivities to carbon monoxide and hydrogen sulfide, it is likely that the current round of residential fuel cell development programs will shortly come to the same conclusions.

However, if relatively pure hydrogen were available to the consumer, the economics change significantly. From one-half to two-thirds of the cost of a residential or small commercial fuel cell power plant disappears if the consumer can connect directly to a source of hydrogen.

Hydrogen as a Fuel Gas

The natural gas industry has its origins in the manufactured gas industry of the 19th Century in which coal was gasified to produce hydrogen and carbon monoxide that was then delivered to

the consumer via low-pressure pipeline. Thus, residential use of gas containing hydrogen can be said to date back to the middle 1800s. When natural gas became plentiful, the switch to clean burning natural gas was accomplished, in most part, by making small changes in gas appliances leaving much of the distribution system and distribution philosophy intact.

In the 1970s when there was a belief that low cost nuclear energy and energy derived from solar power, wind power, and wave power would produce electricity "too cheap to meter," the natural gas industry investigated the prospects for producing hydrogen via water electrolysis and using it to supplement the natural gas supply. Experiments conducted at Public Service Gas and Electric of New Jersey showed that modern (1970s) gas appliances could use up to 10% hydrogen mixed with the natural gas without changes being required of even the most sensitive gas appliances. Gas distribution systems and more robust gas appliances could tolerate up to 20% hydrogen in the natural gas. Thus the concept of supplying a gas mixture containing hydrogen to the gas consumer is not new and significant work has already been done addressing the technology. However, the concept of supplying 100% hydrogen is new and has significant barriers. The barriers to commercialization of hydrogen as a fuel gas can be divided into three categories: 1) Technical Barriers, 2) Economic Barriers, and 3) Psychological Barriers.

Technical Barriers to the Commercialization of Hydrogen as a Fuel Gas

One technical barrier to commercialization of hydrogen as a fuel gas is its low volumetric heating value relative to competing fuels. The tendency for hydrogen to weaken steel is also a handicap in that it requires the use of stainless steel piping for high-pressure lines. These technical barriers make transporting hydrogen a more expensive proposition than transporting its chief competition, natural gas.

Volumetric Heating Value

The heat of combustion of hydrogen, expressed as the higher heating value (HHV), is 141.8 kJ/gram making it the most energetic fuel available on the basis of mass. For this reason it makes an excellent rocket fuel where minimizing weight is of supreme importance. However, hydrogen has the lowest molecular weight of any combustible gas and as a consequence has a low heat of combustion on a volumetric basis. Therefore, a larger volume of hydrogen must be transported relative to other fuels like natural gas to achieve the same energy transport.

Relative to hydrocarbon fuels such as natural gas, propane, or gasoline vapor, combustion of hydrogen requires the least amount of air to achieve exact stoichiometry. Therefore more fuel can be concentrated in a fixed volume. This is a positive attribute. Under ordinary circumstances when hydrogen is burned in air, a cubic meter of hydrogen/air mixture mixed in exact stoichiometric proportions delivers about the same heat as an equal volume of natural gas/air or gasoline vapor/air despite hydrogen's low volumetric heat of combustion. Since combustion devices use air/fuel mixtures, heat generated by a unit volume of stoichiometric air/fuel mixture is the most appropriate method of comparing the serviceability of different fuels. In other words, the same volume of air/fuel mixture moves through the combustion apparatus regardless of the fuel you chose. **On the basis of heat released during combustion of a fixed volume of air/fuel mixture, hydrogen, natural gas, and gasoline vapor are comparable to**

one another. Table 1 below compares selected technical specifications for hydrogen, natural gas, and gasoline vapor.

Table 1 – Fuel Characteristics

	Hydrogen	Natural Gas*	Gasoline*
Higher Heating Value (kJ/g)	142	58	48
Lower Heating Value (kJ/g)	120	52	45
Volumetric Higher Heating Value (MJ/m^3)	12.1	39.3	--
Volumetric Lower Heating Value (MJ/m^3)	10.2	35.4	--
Fuel in a Stoichiometric air/fuel mix (Vol-%)	29.5	9.5	1.76
HHV of 1-m^3 Stoichiometric air/fuel (MJ)	3.52	3.5	3.7
Flame temperature °K	2370	2223 (CH_4)	2470
Maximum flame speed in air (m/s)	3.46	0.45 (CH_4)	1.76
Upper flammability limit in air, (Vol-%)	75	15 (CH_4)	7.6
Lower flammability limit in air, (Vol-%)	4.0	5.3 (CH_4)	1.0
Flame emissivity, %	17 to 25	25 to 33	34 to 43
Minimum ignition energy in air (mJ)	0.02	0.29 (CH_4)	0.24
Normal boiling point of liquid °C	-259	-161 (CH_4)	40 to 200

* Natural gas and gasoline are complex mixtures of hydrocarbons that vary slightly in composition from location to location. Unless indicated otherwise the values used here are reasonable averages. (CH_4) indicates that the value listed is for pure methane rather than natural gas.

Flame Temperature

Flame temperature impacts the heat transfer characteristics, the corrosive nature of the flame, and the formation of nitrogen oxides. Hydrogen, natural gas, and gasoline vapor, all have about the same flame temperature when burned in air and so are relatively equivalent to each other.

Flame Speed

Hydrogen, natural gas, and gasoline vapor differ significantly in flame speed and in their spectral characteristics. Therefore, burners and combustors designed to operate on natural gas or higher hydrocarbon fuels cannot be used with hydrogen without modification. For example, a combustor designed to operate on natural gas can be converted to propane, butane, or vaporized liquid hydrocarbons simply by altering the fuel metering equipment (the fuel orifice in a simple burner). The flame speed, the flame temperature, and spectral emissions of these hydrocarbon fuels are close enough to that of natural gas that no other equipment change need be made. As a result, price driven fuel switching from natural gas to oil is a common practice in utility boilers.

Hydrogen has a flame speed about 10 times faster than natural gas and several times faster than the higher hydrocarbons and were hydrogen to be substituted for natural gas, the flame length would shorten and there would be danger of flash-back into the air/fuel mixing section (burner head) creating a hazard. Flame speed also relates to engine knock in internal combustion engines. While natural gas makes an excellent substitute for gasoline in a conventional IC engine with only minor timing modifications being required, hydrogen requires significant modifications to be used in an IC engine to prevent engine knock.

Flame Emissivity

The spectral characteristics (flame emissivity) of a burning fuel relate to its ability to transfer heat by radiation from the flame front to a heat absorption device such as a heat exchanger or water filled boiler. Heat transfer from the flame to the absorber via radiation from the flame front is in the form radiation of microwave, infrared and visible light wavelengths that results from the excitation of carbon dioxide and water molecules in the hot flame. In the higher hydrocarbons, molecular radicals with unpaired electrons also form in the flame front and produce additional opportunities for radiative heat transfer. The larger the molecule, the more likely it is to form radicals.

Hydrogen, having the simplest possible molecule, burns with an almost invisible flame with most of its radiation in the infrared. Thus effective heat transfer from a burning hydrogen flame must be by conduction (direct contact) since only small amounts of heat can be transferred by radiation. This is not a problem, for example, for a pot sitting on a kitchen range. Almost 100% of the heat is transferred from the flame to the pot via contact with the hot flame and exhaust gases. However, in some industrial applications, for example in molten glass furnaces, significant amounts of heat are transferred via radiation from the flame front to the molten glass. In applications such as these, hydrogen would be at a disadvantage.

Although combustion of hydrogen has significant environmental advantages over natural gas and higher hydrocarbons, it has no specific performance advantage when used in combustion devices designed for other fuels. To achieve maximum efficiency in a combustion device operating on hydrogen fuel requires that the design of the device be optimized for hydrogen.

Ignition Energy

Ignition energy is the minimum energy required to start a self-sustaining chemical reaction, in this case combustion. The energy required to ignite a stoichiometric hydrogen/air mixture is about one-tenth that required to ignite natural gas. The immediate impact of this relates to hydrogen safety in that hydrogen leaked into the air is more likely to ignite, for example due to a static electricity discharge, than is natural gas or gasoline. On the other hand, low ignition energy is a positive attribute, for example, in an internal combustion (IC) engine. An IC engine fueled with hydrogen should have no trouble starting in sub-zero weather.

Hydrogen Embrittlement of Steel

This is both a technical barrier and an economic barrier. There have been many suggestions that the natural gas interstate pipeline system and the local distribution systems can be used to transport hydrogen from the point of production to the consumers. The most recent suggestion comes in the book *Our Future is Hydrogen!* by Robert Siblerud.[(2)] However, some work has been performed assessing whether or not the interstate pipeline system currently in place could be used to transport pure hydrogen and the general conclusion is that it cannot be used because of hydrogen embrittlement.[(3)]

The metals used to fabricate interstate pipelines range from low strength carbon steels with yield strengths of 30,000 psi (207 MPa) to high strength low-alloy steels with yield strengths of 80,000 psi (552 MPa).[4] These steels are weakened by hydrogen during pressure cycling, as occurs normally during pipeline operation. Fatigue crack growth, which is a variation of metal fatigue, is a normal aging process for pipelines undergoing pressure cycling. The presence of hydrogen greatly accelerates fatigue crack growth weakening the pipeline more rapidly than would occur in normal service. The problem is exacerbated in heat effected zones (welds) and by large pressure swings such as occur when the pipeline is depressurized for maintenance and then re-pressurized for continuing service.

Some of the confusion regarding whether the steels used in natural gas pipelines also can be used in hydrogen service may be explained by the observation that hydrogen embrittlement can be inhibited by small amounts of an oxygen containing gas such as air, carbon monoxide, or sulfur dioxide. Thus tests conducted with high purity hydrogen show rapid failure due to fatigue crack growth while tests conducted with lower quality hydrogen contaminated with trace amounts of air, for example, show little evidence of failure. This also may explain why hydrogen embrittlement was not a problem for the manufactured gas distribution systems of the late 19th and early 20th Century.

However, given the current concern for infrastructure safety, it is doubtful that any pipeline company will sign off on using their existing interstate pipeline system for transportation of hydrogen. **The consequence is that any pipeline used to transport hydrogen will have to be constructed from high quality steel and certified for hydrogen use.** Some austenitic stainless steels have been found to be satisfactory for hydrogen service at all temperatures and pressures.[4,5] For example NASA uses Type 316L (UNS designation S31603) for hydrogen service.

Liquid Hydrogen Production

Because of its low boiling point of (minus) -253°C, the energy required to liquefy hydrogen is significant, being about 30 to 35% of the energy value of the liquid hydrogen produced. Nevertheless about one-third of the merchant hydrogen produced in this country is liquefied and delivered to the customer by truck rather than by hydrogen pipeline. As discussed above, merchant hydrogen, that is hydrogen to be used as a chemical feedstock, can command a higher price than hydrogen that might be used for fuel. Therefore, unlike the liquefaction of natural gas where natural gas is used to supply the energy to drive the refrigeration equipment, electricity is used to power the refrigeration equipment for hydrogen liquefaction. Dr. Joan Ogden of the Princeton University Center for Energy and Environmental Studies has authored a report titled "Prospects for Building a Hydrogen Energy Infrastructure" (available at www.princeton.edu/~cees), which addresses the transportation costs for delivery of hydrogen via different routes. The Ogden report, starting with steam reforming of natural gas as the source of hydrogen, places the cost for delivery of liquid hydrogen via truck at an additional $7/Gigajoule versus delivery as a compressed gas via hydrogen pipeline. Thus the difficulty in liquefying hydrogen is both a technical barrier and an economic barrier.

Economic Barriers to Commercialization of Hydrogen as a Fuel Gas

Barring direct government intervention in the form of tax incentives for using renewable resources or tax penalties for CO_2 emissions, when a choice among competing options is made by business, the lowest cost option will invariably win out. It's a fact of life that in the highly competitive business world, choices based on social conscience must ultimately also prove to be profitable or the entrepreneur making the choice will be overwhelmed by the competition and will soon be out of business. Choices made by private consumers, however, often incorporate social conscience in the decision making process provided the cost penalty is reasonable. For example, where the choice is available, consumers routinely chose to subscribe to offers from "green" electric producers even though the choice may entail paying a 10% higher electric rate than charged by a producer using traditional "fossil" energy resources to generate electricity. Consumers, however, place a higher value on convenience of use than does the businessman. For example, a fleet operator may be willing to put up with a 15-minute filling time when refueling a fleet vehicle provided that the economic return in the form of fuel savings outweighs the loss in productivity of his fleet. Most private individuals, however, are uncomfortable with a fill-up time that lasts more than one minute. The natural gas vehicle market where fleet vehicles outnumber privately owned vehicles, can serve as an excellent example. To achieve significant penetration in the private sector hydrogen technologies will have to be convenient as well as cost effective.

Relative Costs for a Hydrogen Pipeline

Although several hydrogen pipelines are in use in the world today, these pipelines are carrying hydrogen for sale as a value added chemical feed stock not as a fuel gas. A definitive study of pipeline costs for a hydrogen pipeline that is the equivalent, in purpose, of an interstate natural gas pipeline is not available. An attempt at costing such a hydrogen pipeline from first principles using the same methods as are used to cost natural gas pipelines was undertaken in 1972 as part of the AGA study.[7] The study concluded that the construction of a hydrogen pipeline would cost from two to three times the cost of constructing a natural gas pipeline when compared on the basis of equivalent energy transported. The primary cost factor is the low volumetric heating value of hydrogen requiring that three times the volume of hydrogen be transported to equal the energy in a given volume of natural gas.

Pumping Losses: Natural gas pipelines depend on natural gas-fueled compression equipment to maintain pipeline pressures. Compressor stations are located at regular intervals along interstate and trans continental pipelines. These compressors provide a mild compression factor of only about 1.1 to 1 and are use to overcome frictional losses and maintain pressure. As a result, a small portion of the gas injected into the pipeline at the wellhead is consumed in powering the compressors as the gas moves through the pipeline.

The volumetric heat of combustion of hydrogen is roughly 1/3 that of natural gas. Therefore, on an energy equivalent basis, three times the volume of hydrogen has to be transported to equal a unit volume of natural gas in energy content. Hydrogen has a somewhat lower dynamic viscosity than natural gas at ambient temperatures. Therefore the frictional losses associated with moving a cubic meter of hydrogen through a pipeline are less than for a cubic meter of

natural gas. This lessens the energy costs associated with transportation such that, for example, the energy costs of moving 3 million cubic meters of hydrogen through a pipeline are only about 2.5 times higher than the energy costs for moving 1 million cubic meters of natural gas. In today's markets where the hydrogen is being sold as a value added chemical feed stock, pipeline compression is likely be supplied by electric motor driven compressors rather than consuming the valuable chemical feed stock. In the future when hydrogen is to be sold as a fuel gas, we would expect the compression equipment to be hydrogen-fueled as it is in natural gas transportation systems. Whereas a natural gas pipeline moving gas across country may be able to deliver 95% of the gas injected into the pipeline at the wellhead, an energy equivalent system transporting hydrogen would be able to deliver only about 88% over the same distance because of the higher parasitic losses required to maintain pressure.

There are three factors that impact the cost of a pipeline project: 1) cost of materials and equipment, 2) cost of labor, and 3) cost of purchasing the right-of-way for the project. Two of these three would not be significantly different for a hydrogen project compared to natural gas. Equipment costs would certainly be higher. For example, to carry the larger volume of gas, a 36-inch diameter stainless steel pipeline would be necessary for hydrogen service to carry the same energy content as can be carried by a 24-inch steel pipeline in natural gas service. However the labor required to construct the pipeline would not be significantly different and the right-of-way costs would be the same. Thus the assessment made in 1972 that a hydrogen pipeline would cost two to three times as much as a natural gas pipeline is too much weighted toward equipment and materials costs.[7] A more practical estimate could be closer to 40% more. However, there is a need for a more comprehensive study of this question.

Table 2 lists some pipeline projects that are currently underway in the US. Costs vary significantly with location and pipe diameter. It is well within the realm of possibility that, because of right-of-way costs, a 1500 MMcf/d hydrogen pipeline in West Texas built of stainless steel pipe would cost less than an equivalent 500 MMcf/d natural gas pipeline in New York State. There is a rule of thumb within the gas industry, "to a first approximation calculate a million dollars per mile." Until a more definitive study is performed, we might propose the hydrogen equivalent as being $1.4 million per mile.

TABLE 2 - Pipeline Project Underway in Fall 2002

#1 Millennium Pipeline 425 miles, $700 million ($1.64 million/mile) 700 MMcf/d of natural gas Ontario, Canada to Southern New York State	TEPPCO Partners Expansion of Jonah System in Wyoming 43 miles, $45 million ($1 million/mile) 20 and 24-inch natural gas pipeline
#2 El Paso Energy Partners 380 miles, $450 million ($1.18 million/mile) 500,000 barrels/day of liquid hydrocarbons	Medicine Hat Pipeline 42 miles, $10 million ($0.23 million/mile) 10-inch pipe, 53 MMcf/d natural gas
Enbridge Northwest Alabama 50 miles, $23 million ($0.46 million/mile) 30-inch natural gas pipeline	Kinder Morgan North Texas Pipeline 86 miles, $70 million ($0.81 million/mile) 30-inch natural gas pipeline

Variable Resource Costs

As mentioned several times above, the cost of producing hydrogen is directly related to the costs of the natural resource from which the hydrogen is made. It is important that the production of hydrogen from biomass use resources that are not in demand for other uses that affect the price. Neither should the development of a biomass to hydrogen industry cause a scarcity in the resources on which it depends. Two examples can suffice as an explanation.

Propane is produced as a secondary product of natural gas production. The retail price of propane is determined almost entirely by the demand since the supply is constant with natural gas production. During the 1970s a study was conducted to determine if wholesale conversion of fleet vehicles to propane, which at the time was a less expensive fuel than gasoline, would ease the energy crisis. It was determined that as the new propane demand came on line, the retail cost of propane would be driven up to where it exceeded that of gasoline and propane shortages would result.

A second example comes from the final PSE&G report on mixing hydrogen with natural gas. The basis of the study was the belief that extremely cheap, off-peak electricity would be available from the nuclear power industry that could be used to generate hydrogen via water electrolysis. The goal was to supplement the natural gas supply with this cheap hydrogen. The conclusion of that study, however, was that as cheap off-peak power became available, large and mid-size industrial users who were responsible for much of the peak demand in the first place, would change their operations to take advantage of the cheaper off-peak electric rates and as a result both the electric demand and the electric rates would be levelized at a rate too high to make hydrogen produced via water electrolysis competitive as a fuel gas.

For these reasons it is important to choose a biomass resource that is not a commodity subject to a supply/demand cycle driven by other uses.

Hydrogen as a Transportation Fuel

There have been many studies addressing the use of hydrogen as a transportation fuel. Many of these studies address the question of whether hydrogen should be produces at a central location and piped to a service station, produced at the service station and then compressed into on-board cylinders, or produced on-board from hydrocarbon or alcohol fuels. The Ogden report suggests that the cheapest hydrogen would come from the central station scenario.

Hydrogen as a transportation fuel, combined with fuel cell vehicles, has a distinct advantage over IC engines. In the typical IC engine vehicle optimized for a hydrocarbon fuel, only about 15% of the fuel value ends up as kinetic energy moving the vehicle down the road. This value increases to about 25% for an IC engine/electric hybrid. Fuel cell vehicles operating on compressed hydrogen have the potential of achieving over 30% and, unlike the hybrids, would be classed as zero emission vehicles. Ignoring vehicle costs for the moment, the efficiency of a fuel cell/electric hybrid vehicle can support a fuel cost in $/Gigawatt that is double that of gasoline in an IC engine vehicle. Fuel cell vehicles are one application where hydrogen has a

distinct advantage over other fuel choices. There is, however, one major barrier to commercialization. No one has an affordable fuel cell vehicle.

Psychological Barriers to Commercialization

Much has been made of the impact of the Hindenburg conflagration and the Challenger disaster on the national psyche when it comes to the subject of hydrogen safety. Hydrogen advocates have made several attempts to change the public's perception of hydrogen by pointing out that it was the combustible paint used on the skin of the Hindenburg that caused the conflagration and failure of the solid fuel booster rockets, not the hydrogen engines or the storage tanks, that caused the Challenger disaster.

Nevertheless even in the absence of these two well-known "incidents," the flammability and explosive nature of hydrogen would still be fixed in our psyche. In US schools, the first acquaintance with the nature of hydrogen occurs in elementary or junior high school in the form of a teacher demonstration. Hydrogen is produced by the chemical action of hydrochloric acid on zinc metal and the hydrogen collected in a test tube. The hydrogen is then ignited, with a burning wooden splinter, making a resounding "pop". In high school a more dramatic demonstration may be performed by first electrolyzing water to produce both hydrogen and oxygen in separate arms of an "H" shaped electrochemical cell and then bringing the two gases together in the same tube and igniting them with an electric spark. Under the right circumstances, the decibel level of the "bang" produced by the hydrogen/oxygen explosion can equal the sound made by a small-caliber pistol. Both demonstrations bring home the message that "hydrogen explodes."

In many cases these two demonstrations may be the only time that a student encounters an exploding gas through out his 12 years of public education. This has the unintended consequence of leaving them with the impression that hydrogen is more dangerous than the other combustible gases they encounters in daily life, natural gas and propane. This impression is reinforced by characterizing hydrogen as "rocket fuel" used by the space shuttle and as the material from which hydrogen bombs are made.

One role that government could play in overcoming this psychological barrier is to develop a series of tested demonstrations for junior high school science teachers to use in the classroom that compares the physical properties and flammability characteristics of hydrogen, natural gas, and propane. It is well within the capabilities of a junior high school student to understand the concepts of heating value, flammability limits, flame temperature, and flame speed. Such concepts can be taught as part of a science program or a fire safety program.

NASA might be encouraged to provide educational materials on its web site describing the relative merits of hydrogen as a rocket fuel. The Saturn V moon rocket used kerosene as a fuel, not liquid hydrogen. Why the switch to hydrogen for the space shuttle? One could even conceive of an interactive game playing off the NASA web site: "Fuel Your Rocket" that calculates lifting capacity, environmental impact, and astronaut safety as a function of fuel choice, with the goal of educating the student that hydrogen is simply another fuel choice, not something inherently more powerful or dangerous than other gaseous fuels.

Safety versus Public Perception

Large quantities of hydrogen are routinely handled safely by the chemical industry and by NASA. Studies of hydrogen fuel vehicles by Sandia National Laboratory [8] and by Ford Motor Company [9] have come to the conclusion that with proper engineering, hydrogen fueled vehicles have the potential to be safer than gasoline or propane fueled vehicles. Ten percent hydrogen mixed with natural gas has been shown to be safe in residential and commercial appliances in the 1970s. However, all this is unknown to the public. In the absence of a major publicity campaign supporting hydrogen safety, the public will continue to think of hydrogen in terms of explosions and conflagrations.

We can learn an important lesson from the history of the General Motors Sierra pickup truck that was sold for a period of time with a natural gas option. As the consequence of two incidences of failure of the compressed gas storage cylinders during refueling, resulting in an explosive release of gas but no fire, GM terminated the program and bought back all the natural gas trucks it had sold at the original sale price.

It is inevitable that as development proceeds, hydrogen fueled vehicles will be involved in accidents. It is important to begin now to educate the public.

Conclusions

There are no significant barriers to commercialization of hydrogen from biomass when that hydrogen is to be sold as a value added chemical feed stock. Prices as high as $15/Gigajoule could be realized for the sale of biomass-derived hydrogen to this market if the central biomass plant was located near the hydrogen customer thus avoiding high transportation changes. A small infrastructure of pipelines and liquid and compressed hydrogen transport vehicles already exist to service this market but do not represent significant competition.

The barriers to commercialization of biomass-derived hydrogen combined with large-scale fuel cell power plants are largely fuel cell related. Here the technology must wait the development of large multi-megawatt class fuel cell power plants.

Electric power generation at the local level using small PEM fuel cells operating on hydrogen from a local distribution system looks promising from the economic point of view in that it significantly reduces fuel cell system costs, but it lacks the infrastructure needed to deliver hydrogen to the consumer.

Significant barriers also exist to the commercialization of hydrogen as a substitute fuel or as a transportation fuel. Chief among these is the cost of transporting hydrogen from the point of production to the point of use. These costs, in turn, are driven by the energy costs required to move large quantities of hydrogen due to its low volumetric heating capacity as a gas and its low boiling point as a liquid. These transportations costs can be offset somewhat if the natural resource used to produce the hydrogen is cheap, of little intrinsic value in its original form, and with little or no market. Hydrogen used as a transportation fuel in fuel cell vehicles, by virtue of

the vehicle's fuel efficiency, can also support a higher fuel price and still remain competitive with traditional hydrocarbon fuels in IC engine driven vehicles.

The result of this preliminary assessment suggests that the path of least resistance, with the fewest barriers, may be to produce hydrogen from low-cost biomass, transport the hydrogen to the consumer via pipeline as a compressed gas, and use it as a transportation fuel in fuel cell vehicles.

References Cited

1 *Chemical & Engineering News*, Vol. **80**, June 24, 2002, page 62

2 Siblerud, Robert, *Our Future is Hydrogen!*, New Science Publications, Wellington, CO (2001)

3 Ogden J.M., Dennis, E., Steinbugler, M. and Strohbehn, J., "Hydrogen Energy Systems Studies," final report to USDOE for Contract No. XR-11265-2, January 18, 1995.

4 *Pipeline Handbook, 7th Edition*, Mohinder L. Nayyar, Editor, McGraw-Hill, New York, (2000)

5 Thompson, A.W. "Materials for Hydrogen Service," *Hydrogen: Its Technology and Implications*, CRC Press, Cleveland, Ohio (1977)

6 Gibbs, B. and Biewald, B., "Transmitting Windpower from the Dakotas to Chicago: A Preliminary Analysis of a Hydrogen Transmission Scenario," Paper presented at the World Congress for a Hydrogen Economy, Denver, CO November 1-4, 2001

7 Gregory, D.P., Chapter IV: "Hydrogen Transmission", *A Hydrogen Energy System*, American Gas Association, (1973)

8 Ringland, J.T., et. al. "Safety Issues for Hydrogen-Powered Vehicles," Sandia National Laboratories, March 1994

9 Ford Motor Company, "Direct Hydrogen Fueled Proton Exchange Membrane Fuel Cell Systems for Transportation Applications: Hydrogen Vehicle Safety Report," Contract No. DE-AC02-94CE50389, May 1997

Appendix H: Economic Sensitivity to Capital Costs

Bagasse Cases **Sensitivity to Capital Cost** Description of Item	Low Cap $25.9 M 500 tonne/day capital -30%	Base $37.0 M 500 tonne/day base case	High Cap $48.1 M 500 tonne/day capital +30%	Low Cap $61.1 M 1000 tonne/day capital -30%	Base $61.1 M 1000 tonne/day base case	High Cap $61.1 M 1000 tonne/day capital +30%	Low Cap $70.7 M 2000 tonne/day capital -30%	Base $100.9 M 2000 tonne/day base case	High Cap $131.2 M 2000 tonne/day capital +30%
Capital cost ($M)	25.9	37.0	48.1	42.7	61.1	79.4	70.7	100.9	131.2
Size dry tonne/day input	400	400	400	800	800	800	1600	1600	1600
Capital $/(dt/day)	64,750	92,500	120,250	53,430	76,329	99,227	44,159	63,085	82,010
CRF per year	0.20	0.20	0.20	0.20	0.20	0.20	0.20	0.20	0.20
$ per yr cap recover $M	$5.18	$7.40	$9.62	$8.55	$12.21	$15.88	$14.13	$20.19	$26.24
No. of staff	20	20	20	20	20	20	20	20	20
$ per yr each staff	70,000	70,000	70,000	70,000	70,000	70,000	70,000	70,000	70,000
Oper per yr $M	$1.40	$1.40	$1.40	$1.40	$1.40	$1.40	$1.40	$1.40	$1.40
Maint fract of cap per yr	0.030	0.030	0.030	0.030	0.030	0.030	0.030	0.030	0.030
Maint per yr $M	$0.78	$1.11	$1.44	$1.28	$1.83	$2.38	$2.12	$3.03	$3.94
Fuel cost $/GJ	$1.50	$1.50	$1.50	$1.50	$1.50	$1.50	$1.50	$1.50	$1.50
H2 prod per input kg/dt	78.1	78.1	78.1	78.1	78.1	78.1	78.1	78.1	78.1
Capacity factor	0.90	0.90	0.90	0.90	0.90	0.90	0.90	0.90	0.90
Hours per year	7884	7884	7884	7884	7884	7884	7884	7884	7884
Fuel in $M per yr	$3.51	$3.51	$3.51	$7.03	$7.03	$7.03	$14.06	$14.06	$14.06
Total $M per yr	$10.87	$13.42	$15.98	$18.26	$22.47	$26.69	$31.71	$38.67	$45.64
10^6 GJ of H2 per year	1.471	1.471	1.471	2.941	2.941	2.941	5.883	5.883	5.883
Cost of H2 in $/GJ	$7.39	$9.13	$10.86	$6.21	$7.64	$9.07	$5.39	$6.57	$7.76
Breakdown of cost of H2:									
capital $/GJ	$3.52	$5.03	$6.54	$2.91	$4.15	$5.40	$2.40	$3.43	$4.46
operation $/GJ	$0.95	$0.95	$0.95	$0.48	$0.48	$0.48	$0.24	$0.24	$0.24
Total	$0.53	$0.75	$0.98	$0.44	$0.62	$0.81	$0.36	$0.51	$0.67
fuel $/GJ	$2.39	$2.39	$2.39	$2.39	$2.39	$2.39	$2.39	$2.39	$2.39
total $/GJ	$7.39	$9.13	$10.86	$6.21	$7.64	$9.07	$5.39	$6.57	$7.76
Values used in above H2 calcs.:									
GJ/tonne (dry biomass)	17.83	17.83	17.83	17.83	17.83	17.83	17.83	17.83	17.83
GJ per tonne of H2	143.31	143.31	143.31	143.31	143.31	143.31	143.31	143.31	143.31
tonnes of dry biomass / yr	131,400	131,400	131,400	262,800	262,800	262,800	525,600	525,600	525,600
tonnes of H2 / yr	10,262	10,262	10,262	20,525	20,525	20,525	41,049	41,049	41,049
10^3 GJ biomass input / yr	2,343	2,343	2,343	4,686	4,686	4,686	9,371	9,371	9,371
10^3 GJ H2 output / yr	1,471	1,471	1,471	2,941	2,941	2,941	5,883	5,883	5,883
efficiency of H2 production	0.628	0.628	0.628	0.628	0.628	0.628	0.628	0.628	0.628
Result: Cost of H2 in $/GJ	**$7.39**	**$9.13**	**$10.86**	**$6.21**	**$7.64**	**$9.07**	**$5.39**	**$6.57**	**$7.76**

Switchgrass Cases **Sensitivity to Capital Cost**	Low Cap $25.5 M	Base $36.5 M	High Cap $47.4 M	Low Cap $42.4 M	Base $60.6 M	High Cap $78.8 M	Low Cap $70.6 M	Base $100.9 M	High Cap $131.1 M
	500 tonne/day capital -30%	500 tonne/day base case	500 tonne/day capital +30%	1000 tonne/day capital -30%	1000 tonne/day base case	1000 tonne/day capital +30%	2000 tonne/day capital -30%	2000 tonne/day base case	2000 tonne/day capital +30%
Capital cost $M	25.5	36.5	47.4	42.4	60.6	78.8	70.6	100.9	131.1
Size dry tonne/day input	440	440	440	880	880	880	1760	1760	1760
Capital/capacity $/(dt/day)	58,005	82,864	107,723	48,213	68,875	89,538	40,119	57,313	74,506
CRF per year (cap return/y)	0.20	0.20	0.20	0.20	0.20	0.20	0.20	0.20	0.20
$ per yr cap recover $M	$5.10	$7.29	$9.48	$8.49	$12.12	$15.76	$14.12	$20.17	$26.23
No. of staff	20	20	20	20	20	20	20	20	20
$ per yr each staff	70,000	70,000	70,000	70,000	70,000	70,000	70,000	70,000	70,000
Oper per yr $M	$1.40	$1.40	$1.40	$1.40	$1.40	$1.40	$1.40	$1.40	$1.40
Maint fract of cap per yr	0.030	0.030	0.030	0.030	0.030	0.030	0.030	0.030	0.030
Maint per yr $M	$0.77	$1.09	$1.42	$1.27	$1.82	$2.36	$2.12	$3.03	$3.93
Fuel cost $/GJ	$1.50	$1.50	$1.50	$1.50	$1.50	$1.50	$1.50	$1.50	$1.50
H2 prod per input kg/dt	84.1	84.1	84.1	84.1	84.1	84.1	84.1	84.1	84.1
Capacity factor	0.90	0.90	0.90	0.90	0.90	0.90	0.90	0.90	0.90
Hours per year	7884	7884	7884	7884	7884	7884	7884	7884	7884
Fuel in $M per yr	$4.06	$4.06	$4.06	$8.12	$8.12	$8.12	$16.23	$16.23	$16.23
Total $M per yr	$11.33	$13.84	$16.36	$19.28	$23.46	$27.64	$33.87	$40.83	$47.79
10^6 GJ of H2 per year	1.742	1.742	1.742	3.484	3.484	3.484	6.968	6.968	6.968
Cost of H2 in $/GJ	$6.50	$7.95	$9.39	$5.53	$6.73	$7.93	$4.86	$5.86	$6.86
Breakdown H2 cost:									
capital $/GJ	$2.93	$4.19	$5.44	$2.44	$3.48	$4.52	$2.03	$2.90	$3.76
operation $/GJ	$0.80	$0.80	$0.80	$0.40	$0.40	$0.40	$0.20	$0.20	$0.20
maint $/GJ	$0.44	$0.63	$0.82	$0.37	$0.52	$0.68	$0.30	$0.43	$0.56
fuel $/GJ	$2.33	$2.33	$2.33	$2.33	$2.33	$2.33	$2.33	$2.33	$2.33
total $/GJ	$6.50	$7.95	$9.39	$5.53	$6.73	$7.93	$4.86	$5.86	$6.86
Values used above:									
GJ/tonne (dry biomass)	18.72	18.72	18.72	18.72	18.72	18.72	18.72	18.72	18.72
GJ per tonne of H2	143.31	143.31	143.31	143.31	143.31	143.31	143.31	143.31	143.31
tonnes of dry biomass / yr	144,540	144,540	144,540	289,080	289,080	289,080	578,160	578,160	578,160
tonnes of H2 / yr	12,156	12,156	12,156	24,312	24,312	24,312	48,623	48,623	48,623
10^3 GJ biomass input / yr	2,706	2,706	2,706	5,412	5,412	5,412	10,823	10,823	10,823
10^3 GJ H2 output / yr	1,742	1,742	1,742	3,484	3,484	3,484	6,968	6,968	6,968
efficiency of H2 production	0.644	0.644	0.644	0.644	0.644	0.644	0.644	0.644	0.644
Cost of H2 product, $/GJ	**$6.50**	**$7.95**	**$9.39**	**$5.53**	**$6.73**	**$7.93**	**$4.86**	**$5.86**	**$6.86**

Nutshell Mix Cases	Low Cap Cost	Base Case	High Cap Cost
Sensitivity to Capital Cost	$25.4 M	$36.3 M	$47.2 M
	500 tonne/d	500 tonne/d	500 tonne/d
	capital -30%	base case	capital +30%
Capital cost $M	25.4	36.3	47.2
Size dry tonne/day input	437.5	437.5	437.5
Capital/capacity $/(dt/day)	58,090	82,986	107,882
CRF per year (cap return/y)	0.2	0.2	0.2
$ per yr cap recover $M	$5.08	$7.26	$9.44
No. of staff	20	20	20
$ per yr each staff	70,000	70,000	70,000
Oper per yr $M	$1.40	$1.40	$1.40
Maint fract of cap per yr	0.03	0.03	0.03
Maint per yr $M	$0.76	$1.09	$1.42
Fuel cost $/GJ	$1.50	$1.50	$1.50
H2 prod per input kg/dt	88.3	88.3	88.3
Capacity factor	0.9	0.9	0.9
Hours per year	7884	7884	7884
Fuel in $M per yr	$4.29	$4.29	$4.29
Total $M per yr	$11.53	$14.04	$16.54
10^6 GJ of H2 per year	1.819	1.819	1.819
Cost of H2 in $/GJ	$6.34	$7.72	$9.10
Breakdown H2 cost:			
capital $/GJ	$2.79	$3.99	$5.19
operation $/GJ	$0.77	$0.77	$0.77
maint $/GJ	$0.42	$0.60	$0.78
fuel $/GJ	$2.36	$2.36	$2.36
total $/GJ	$6.34	$7.72	$9.10
Values used above:			
GJ/tonne (dry biomass)	19.88	19.88	19.88
GJ per tonne of H2	143.31	143.31	143.31
tonnes of dry biomass / yr	143,719	143,719	143,719
tonnes of H2 / yr	12,690	12,690	12,690
10^3 GJ biomass input / yr	2,857	2,857	2,857
10^3 GJ H2 output / yr	1,819	1,819	1,819
efficiency of H2 production	0.637	0.637	0.637
Cost of H2 produced in $/GJ	**$6.34**	**$7.72**	**$9.10**

Appendix I: Economic Sensitivity to Feedstock Costs

Bagasse Feedstock	$1.00/GJ	$2.00/GJ	$3.00/GJ	$1.00/GJ	$2.00/GJ	$3.00/GJ	$1.00/GJ	$2.00/GJ	$3.00/GJ
Cost Sensitivity	500 t/d	500 t/d	500 t/d	1000 t/d	1000 t/d	1000 t/d	2000 t/d	2000 t/d	2000 t/d
Description of Item									
Capital cost ($M)	37.0	37.0	37.0	61.1	61.1	61.1	100.9	100.9	100.9
Size dry tonne/day input	400	400	400	800	800	800	1600	1600	1600
Capital $/(dt/day)	92,500	92,500	92,500	76,329	76,329	76,329	63,085	63,085	63,085
CRF per year	0.20	0.20	0.20	0.20	0.20	0.20	0.20	0.20	0.20
$ per yr cap recover $M	$7.40	$7.40	$7.40	$12.21	$12.21	$12.21	$20.19	$20.19	$20.19
No. of staff	20	20	20	20	20	20	20	20	20
$ per yr each staff	70,000	70,000	70,000	70,000	70,000	70,000	70,000	70,000	70,000
Oper per yr $M	$1.40	$1.40	$1.40	$1.40	$1.40	$1.40	$1.40	$1.40	$1.40
Maint fract of cap per yr	0.030	0.030	0.030	0.030	0.030	0.030	0.030	0.030	0.030
Maint per yr $M	$1.11	$1.11	$1.11	$1.83	$1.83	$1.83	$3.03	$3.03	$3.03
Fuel cost $/GJ	$1.00	$2.00	$3.00	$1.00	$2.00	$3.00	$1.00	$2.00	$3.00
H2 prod per input kg/dt	78.1	78.1	78.1	78.1	78.1	78.1	78.1	78.1	78.1
Capacity factor	0.90	0.90	0.90	0.90	0.90	0.90	0.90	0.90	0.90
Hours per year	7884	7884	7884	7884	7884	7884	7884	7884	7884
Fuel in $M per yr	$2.34	$4.69	$7.03	$4.69	$9.38	$14.07	$9.38	$18.75	$28.13
Total $M per yr	$12.25	$14.60	$16.94	$20.13	$24.82	$29.51	$33.99	$43.37	$52.75
10^6 GJ of H2 per year	1.473	1.473	1.473	2.945	2.945	2.945	5.890	5.890	5.890
Cost of H2 in $/GJ	$8.32	$9.91	$11.51	$6.84	$8.43	$10.02	$5.77	$7.36	$8.95
Breakdown of cost of H2:									
capital $/GJ	$5.03	$5.03	$5.03	$4.15	$4.15	$4.15	$3.43	$3.43	$3.43
operation $/GJ	$0.95	$0.95	$0.95	$0.48	$0.48	$0.48	$0.24	$0.24	$0.24
Total	$0.75	$0.75	$0.75	$0.62	$0.62	$0.62	$0.51	$0.51	$0.51
fuel $/GJ	$1.59	$3.18	$4.78	$1.59	$3.18	$4.78	$1.59	$3.18	$4.78
total $/GJ	$8.32	$9.91	$11.51	$6.84	$8.43	$10.02	$5.77	$7.36	$8.95
Values used above:									
GJ/tonne (dry biomass)	17.84	17.84	17.84	17.84	17.84	17.84	17.84	17.84	17.84
GJ per tonne of H2	143.49	143.49	143.49	143.49	143.49	143.49	143.49	143.49	143.49
tonnes of dry biomass / yr	131,400	131,400	131,400	262,800	262,800	262,800	525,600	525,600	525,600
tonnes of H2 / yr	10,262	10,262	10,262	20,525	20,525	20,525	41,049	41,049	41,049
10^3 GJ biomass input / yr	2,344	2,344	2,344	4,688	4,688	4,688	9,377	9,377	9,377
10^3 GJ H2 output / yr	1,473	1,473	1,473	2,945	2,945	2,945	5,890	5,890	5,890
efficiency of H2 production	0.628	0.628	0.628	0.628	0.628	0.628	0.628	0.628	0.628
Cost of H2 in $/GJ	**$8.32**	**$9.91**	**$11.51**	**$6.84**	**$8.43**	**$10.02**	**$5.77**	**$7.36**	**$8.95**

Switchgrass Feedstock	$1.00/GJ	$2.00/GJ	$3.00/GJ	$1.00/GJ	$2.00/GJ	$3.00/GJ	$1.00/GJ	$2.00/GJ	$3.00/GJ
Cost Sensitivity	500 t/d	500 t/d	500 t/d	1000 t/d	1000 t/d	1000 t/d	2000 t/d	2000 t/d	2000 t/d
Description of Item									
Capital cost ($M)	36.5	36.5	36.5	60.6	60.6	60.6	100.9	100.9	100.9
Size dry tonne/day input	440	440	440	880	880	880	1760	1760	1760
Capital $/(dt/day)	82,860	82,860	82,860	68,876	68,876	68,876	57,314	57,314	57,314
CRF per year	0.20	0.20	0.20	0.20	0.20	0.20	0.15	0.15	0.15
$ per yr cap recover $M	$7.29	$7.29	$7.29	$12.12	$12.12	$12.12	$15.13	$15.13	$15.13
No. of staff	20	20	20	20	20	20	20	20	20
$ per yr each staff	70,000	70,000	70,000	70,000	70,000	70,000	70,000	70,000	70,000
Oper per yr $M	$1.40	$1.40	$1.40	$1.40	$1.40	$1.40	$1.40	$1.40	$1.40
Maint fract of cap per yr	0.030	0.030	0.030	0.030	0.030	0.030	0.030	0.030	0.030
Maint per yr $M	$1.09	$1.09	$1.09	$1.82	$1.82	$1.82	$3.03	$3.03	$3.03
Fuel cost $/GJ	$1.00	$2.00	$3.00	$1.00	$2.00	$3.00	$1.00	$2.00	$3.00
H2 prod per input kg/dt	84.1	84.1	84.1	84.1	84.1	84.1	84.1	84.1	84.1
Capacity factor	0.90	0.90	0.90	0.90	0.90	0.90	0.90	0.90	0.90
Hours per year	7884	7884	7884	7884	7884	7884	7884	7884	7884
Fuel in $M per yr	$2.71	$5.42	$8.13	$5.42	$10.84	$16.26	$10.84	$21.68	$32.52
Total $M per yr	$12.50	$15.21	$17.92	$20.76	$26.18	$31.60	$30.40	$41.24	$52.08
10^6 GJ of H2 per year	1.744	1.744	1.744	3.488	3.488	3.488	6.977	6.977	6.977
Cost of H2 in $/GJ	$7.16	$8.72	$10.27	$5.95	$7.51	$9.06	$4.36	$5.91	$7.46
Breakdown of cost of H2:									
capital $/GJ	$4.18	$4.18	$4.18	$3.47	$3.47	$3.47	$2.17	$2.17	$2.17
operation $/GJ	$0.80	$0.80	$0.80	$0.40	$0.40	$0.40	$0.20	$0.20	$0.20
Total	$0.63	$0.63	$0.63	$0.52	$0.52	$0.52	$0.43	$0.43	$0.43
fuel $/GJ	$1.55	$3.11	$4.66	$1.55	$3.11	$4.66	$1.55	$3.11	$4.66
total $/GJ	$7.16	$8.72	$10.27	$5.95	$7.51	$9.06	$4.36	$5.91	$7.46
Values used in above H2 calcs.:									
GJ/tonne (dry biomass)	18.75	18.75	18.75	18.75	18.75	18.75	18.75	18.75	18.75
GJ per tonne of H2	143.49	143.49	143.49	143.49	143.49	143.49	143.49	143.49	143.49
tonnes of dry biomass / yr	144,540	144,540	144,540	289,080	289,080	289,080	578,160	578,160	578,160
tonnes of H2 / yr	12,156	12,156	12,156	24,312	24,312	24,312	48,623	48,623	48,623
10^3 GJ biomass input / yr	2,710	2,710	2,710	5,420	5,420	5,420	10,841	10,841	10,841
10^3 GJ H2 output / yr	1,744	1,744	1,744	3,488	3,488	3,488	6,977	6,977	6,977
efficiency of H2 production	0.644	0.644	0.644	0.644	0.644	0.644	0.644	0.644	0.644
Cost of H2 in $/GJ	**$7.16**	**$8.72**	**$10.27**	**$5.95**	**$7.51**	**$9.06**	**$4.36**	**$5.91**	**$7.46**

Nutshell Mix Feedstock	$1.00/GJ	$2.00/GJ	$3.00/GJ
Cost Sensitivity	500 t/d	500 t/d	500 t/d
Description of Item			
Capital cost ($M)	36.3	36.3	36.3
Size dry tonne/day input	437.5	437.5	437.5
Capital $/(dt/day)	82,986	82,986	82,986
CRF per year	0.20	0.20	0.20
$ per yr cap recover $M	$7.26	$7.26	$7.26
No. of staff	20	20	20
$ per yr each staff	70,000	70,000	70,000
Oper per yr $M	$1.40	$1.40	$1.40
Maint fract of cap per yr	0.030	0.030	0.030
Maint per yr $M	$1.09	$1.09	$1.09
Fuel cost $/GJ	$1.00	$2.00	$3.00
H2 prod per input kg/dt	88.3	88.3	88.3
Capacity factor	0.90	0.90	0.90
Hours per year	7884	7884	7884
Fuel in $M per yr	$2.86	$5.71	$8.57
Total $M per yr	$12.61	$15.46	$18.32
10^6 GJ of H2 per year	1.820	1.820	1.820
Cost of H2 in $/GJ	$6.93	$8.50	$10.07
Breakdown of cost of H2:			
capital $/GJ	$3.99	$3.99	$3.99
operation $/GJ	$0.77	$0.77	$0.77
Total	$0.60	$0.60	$0.60
fuel $/GJ	$1.57	$3.14	$4.71
total $/GJ	$6.93	$8.50	$10.07
Values used in above H2 calcs.:			
GJ/tonne (dry biomass)	19.88	19.88	19.88
GJ per tonne of H2	143.4	143.4	143.4
tonnes of dry biomass / yr	143,719	143,719	143,719
tonnes of H2 / yr	12,690	12,690	12,690
10^3 GJ biomass input / yr	2,857	2,857	2,857
10^3 GJ H2 output / yr	1,820	1,820	1,820
efficiency of H2 production	0.637	0.637	0.637
Cost of H2 in $/GJ	**$6.93**	**$8.50**	**$10.07**

Appendix J: Economic Sensitivity to Internal Rate of Return

Bagasse Cases	Base Case	Case 1	Case 2	Base Case	Case 1	Case 2	Base Case	Case 1	Case 2
Sensitivity to IRR at 3 sizes	$37.0 M	$37.0 M	$37.0 M	$61.1 M	$61.1 M	$61.1 M	$100.9 M	$100.9 M	$100.9 M
	Bagasse	Bagasse	Bagasse	Bagasse	Bagasse	Bagasse	Bagasse	Bagasse	Bagasse
Feed Rate at 20% Moisture	500 t/d	500 t/d	500 t/d	1000 t/d	1000 t/d	1000 t/d	2000 t/d	2000 t/d	2000 t/d
Internal Rate of Return %	15.0 %	10.0 %	5.0 %	15.0 %	10.0 %	5.0 %	15.0 %	10.0 %	5.0 %
Capital cost $M	37.0	37.0	37.0	61.1	61.1	61.1	100.9	100.9	100.9
Size dry tonne/day input	400	400	400	800	800	800	1600	1600	1600
Capital/capacity $/(dt/day)	92,500	92,500	92,500	76,329	76,329	76,329	63,085	63,085	63,085
CRF per year (cap return/y)	0.20	0.15	0.10	0.20	0.15	0.10	0.20	0.15	0.10
$ per yr cap recover $M	$7.40	$5.55	$3.70	$12.21	$9.16	$6.11	$20.19	$15.14	$10.09
No. of staff	20	20	20	20	20	20	20	20	20
$ per yr each staff	70,000	70,000	70,000	70,000	70,000	70,000	70,000	70,000	70,000
Oper per yr $M	$1.40	$1.40	$1.40	$1.40	$1.40	$1.40	$1.40	$1.40	$1.40
Maint fract of cap per yr	0.030	0.030	0.030	0.030	0.030	0.030	0.030	0.030	0.030
Maint per yr $M	$1.11	$1.11	$1.11	$1.83	$1.83	$1.83	$3.03	$3.03	$3.03
Fuel cost $/GJ	$1.50	$1.50	$1.50	$1.50	$1.50	$1.50	$1.50	$1.50	$1.50
H2 prod per input kg/dt	78.1	78.1	78.1	78.1	78.1	78.1	78.1	78.1	78.1
Capacity factor	0.90	0.90	0.90	0.90	0.90	0.90	0.90	0.90	0.90
Hours per year	7884	7884	7884	7884	7884	7884	7884	7884	7884
Fuel in $M per yr	$3.51	$3.51	$3.51	$7.02	$7.02	$7.02	$14.05	$14.05	$14.05
Total $M per yr	$13.42	$11.57	$9.72	$22.47	$19.42	$16.36	$38.66	$33.62	$28.57
10^6 GJ of H2 per year	1.471	1.471	1.471	2.941	2.941	2.941	5.883	5.883	5.883
Cost of H2 in $/GJ	$9.13	$7.87	$6.61	$7.64	$6.60	$5.56	$6.57	$5.71	$4.86
Breakdown H2 cost:									
capital $/GJ	$5.03	$3.77	$2.52	$4.15	$3.11	$2.08	$3.43	$2.57	$1.72
operation $/GJ	$0.95	$0.95	$0.95	$0.48	$0.48	$0.48	$0.24	$0.24	$0.24
maint $/GJ	$0.75	$0.75	$0.75	$0.62	$0.62	$0.62	$0.51	$0.51	$0.51
fuel $/GJ	$2.39	$2.39	$2.39	$2.39	$2.39	$2.39	$2.39	$2.39	$2.39
total $/GJ	$9.13	$7.87	$6.61	$7.64	$6.60	$5.56	$6.57	$5.71	$4.86
Values used above:									
GJ/tonne (dry biomass)	17.82	17.82	17.82	17.82	17.82	17.82	17.82	17.82	17.82
GJ per tonne of H2	143.31	143.31	143.31	143.31	143.31	143.31	143.31	143.31	143.31
Tonnes of dry biomass / yr	131,400	131,400	131,400	262,800	262,800	262,800	525,600	525,600	525,600
tonnes of H2 / yr	10,262	10,262	10,262	20,525	20,525	20,525	41,049	41,049	41,049
10^3 GJ biomass input / yr	2,342	2,342	2,342	4,683	4,683	4,683	9,366	9,366	9,366
10^3 GJ H2 output / yr	1,471	1,471	1,471	2,941	2,941	2,941	5,883	5,883	5,883
Efficiency of H2 production	0.628	0.628	0.628	0.628	0.628	0.628	0.628	0.628	0.628
Capital cost of plant in $M	**37.0**	**37.0**	**37.0**	**61.1**	**61.1**	**61.1**	**100.9**	**100.9**	**100.9**
Cost of H2 produced in $/GJ	**$9.13**	**$7.87**	**$6.61**	**$7.64**	**$6.60**	**$5.56**	**$6.57**	**$5.71**	**$4.86**

Switchgrass Cases	Base Case	Case 1	Case 2	Base Case	Case 1	Case 2	Base Case	Case 1	Case 2
Sensitivity to IRR at 3 sizes	$36.5 M Swtchgrss	$36.5 M Swtchgrss	$36.5 M Swtchgrss	$60.6 M Swtchgrss	$60.6 M Swtchgrss	$60.6 M Swtchgrss	$100.9 M Swtchgrss	$100.9 M Swtchgrss	$100.9 M Swtchgrss
Feed Rate at 12% Moisture	500 t/d	500 t/d	500 t/d	1000 t/d	1000 t/d	1000 t/d	2000 t/d	2000 t/d	2000 t/d
Internal Rate of Return %	15.0 %	10.0 %	5.0 %	15.0 %	10.0 %	5.0 %	15.0 %	10.0 %	5.0 %
Capital cost $M	36.5	36.5	36.5	60.6	60.6	60.6	100.9	100.9	100.9
Size dry tonne/day input	440	440	440	880	880	880	1760	1760	1760
Capital/capacity $/(dt/day)	82,860	82,860	82,860	68,876	68,876	68,876	57,313	57,313	57,313
CRF per year (cap return/y)	0.20	0.15	0.10	0.20	0.15	0.10	0.20	0.15	0.10
$ per yr cap recover $M	$7.29	$5.47	$3.65	$12.12	$9.09	$6.06	$20.17	$15.13	$10.09
No. of staff	20	20	20	20	20	20	20	20	20
$ per yr each staff	70,000	70,000	70,000	70,000	70,000	70,000	70,000	70,000	70,000
Oper per yr $M	$1.40	$1.40	$1.40	$1.40	$1.40	$1.40	$1.40	$1.40	$1.40
Maint fract of cap per yr	0.030	0.030	0.030	0.030	0.030	0.030	0.030	0.030	0.030
Maint per yr $M	$1.09	$1.09	$1.09	$1.82	$1.82	$1.82	$3.03	$3.03	$3.03
Fuel cost $/GJ	$1.50	$1.50	$1.50	$1.50	$1.50	$1.50	$1.50	$1.50	$1.50
H2 prod per input kg/dt	84.1	84.1	84.1	84.1	84.1	84.1	84.1	84.1	84.1
Capacity factor	0.90	0.90	0.90	0.90	0.90	0.90	0.90	0.90	0.90
Hours per year	7884	7884	7884	7884	7884	7884	7884	7884	7884
Fuel in $M per yr	$4.06	$4.06	$4.06	$8.12	$8.12	$8.12	$16.23	$16.23	$16.23
Total $M per yr	$13.84	$12.02	$10.20	$23.46	$20.43	$17.40	$40.83	$35.79	$30.75
10^6 GJ of H2 per year	1.742	1.742	1.742	3.484	3.484	3.484	6.968	6.968	6.968
Cost of H2 in $/GJ	$7.95	$6.90	$5.85	$6.73	$5.86	$4.99	$5.86	$5.14	$4.41
Breakdown H2 cost:									
capital $/GJ	$4.19	$3.14	$2.09	$3.48	$2.61	$1.74	$2.90	$2.17	$1.45
operation $/GJ	$0.80	$0.80	$0.80	$0.40	$0.40	$0.40	$0.20	$0.20	$0.20
maint $/GJ	$0.63	$0.63	$0.63	$0.52	$0.52	$0.52	$0.43	$0.43	$0.43
fuel $/GJ	$2.33	$2.33	$2.33	$2.33	$2.33	$2.33	$2.33	$2.33	$2.33
total $/GJ	$7.95	$6.90	$5.85	$6.73	$5.86	$4.99	$5.86	$5.14	$4.41
Values used above:									
GJ/tonne (dry biomass)	18.72	18.72	18.72	18.72	18.72	18.72	18.72	18.72	18.72
GJ per tonne of H2	143.31	143.31	143.31	143.31	143.31	143.31	143.31	143.31	143.31
tonnes of dry biomass / yr	144,540	144,540	144,540	289,080	289,080	289,080	578,160	578,160	578,160
tonnes of H2 / yr	12,156	12,156	12,156	24,312	24,312	24,312	48,623	48,623	48,623
10^3 GJ biomass input / yr	2,706	2,706	2,706	5,412	5,412	5,412	10,823	10,823	10,823
10^3 GJ H2 output / yr	1,742	1,742	1,742	3,484	3,484	3,484	6,968	6,968	6,968
efficiency of H2 production	0.644	0.644	0.644	0.644	0.644	0.644	0.644	0.644	0.644
Capital cost of plant in $M	**36.5**	**36.5**	**36.5**	**60.6**	**60.6**	**60.6**	**100.9**	**100.9**	**100.9**
Cost of H2 produced in $/GJ	**$7.95**	**$6.90**	**$5.85**	**$6.73**	**$5.86**	**$4.99**	**$5.86**	**5.14**	**4.41**

Nutshell Mix Cases	Base Case	Case 1	Case 2
Sensitivity to IRR	$36.3 M	$36.3 M	$36.3 M
	Nutshell mix	Nutshell mix	Nutshell mix
Feed Rate at 12.5% Moisture	500 tonne/d	500 tonne/d	500 tonne/d
Internal Rate of Return %	15.0 %	10.0 %	5.0 %
Capital cost $M	36.3	36.3	36.3
Size dry tonne/day input	437.5	437.5	437.5
Capital/capacity $/(dt/day)	82,986	82,986	82,986
CRF per year (cap return/y)	0.20	0.15	0.10
$ per yr cap recover $M	$7.26	$5.45	$3.63
No. of staff	20	20	20
$ per yr each staff	70,000	70,000	70,000
Oper per yr $M	$1.40	$1.40	$1.40
Maint fract of cap per yr	0.030	0.030	0.030
Maint per yr $M	$1.09	$1.09	$1.09
Fuel cost $/GJ	$1.50	$1.50	$1.50
H2 prod per input kg/dt	88.3	88.3	88.3
Capacity factor	0.90	0.90	0.90
Hours per year	7884	7884	7884
Fuel in $M per yr	$4.29	$4.29	$4.29
Total $M per yr	$14.04	$12.22	$10.41
10^6 GJ of H2 per year	1.819	1.819	1.819
Cost of H2 in $/GJ	$7.72	$6.72	$5.72
Breakdown H2 cost:			
capital $/GJ	$3.99	$2.99	$2.00
operation $/GJ	$0.77	$0.77	$0.77
maint $/GJ	$0.60	$0.60	$0.60
fuel $/GJ	$2.36	$2.36	$2.36
total $/GJ	$7.72	$6.72	$5.72
Values used above:			
GJ/tonne (dry biomass)	19.88	19.88	19.88
GJ per tonne of H2	143.31	143.31	143.31
tonnes of dry biomass / yr	143,719	143,719	143,719
tonnes of H2 / yr	12,690	12,690	12,690
10^3 GJ biomass input / yr	2,857	2,857	2,857
10^3 GJ H2 output / yr	1,819	1,819	1,819
efficiency of H2 production	0.637	0.637	0.637
Capital cost of plant in $M	**36.3**	**36.3**	**36.3**
Cost of H2 produced in $/GJ	**$7.72**	**$6.72**	**$5.72**