S

ENGINEERING CHANGE NOTICE

1. ECN 658734

Proj. ECN

2. ECN Category (mark one)	3. Originator's Name, Organization, MSIN, and Telephone No.	4. USQ Required?	5. Date
Supplemental []	BL Philipp, COGEMA, L6-37, 376-0468	[x] Yes [ ] No	March 15, 2000
Direct Revision [x]	6. Project Title/No./Work Order No.	7. Bldg./Sys./Fac. No.	8. Approval Designator
Change ECN []	Cold Vacuum Drying Facility	CVDF/142K	S^NQ
Temporary []	9. Document Numbers Changed by this ECN (includes sheet no. and rev.)	10. Related ECN No(s).	11. Related PO No.
Standby []			
Supersedure []			
Cancel/Void []	SNF-4451 Rev 1		n/a

12a. Modification Work	12b. Work Package No.	12c. Modification Work Complete	12d. Restored to Original Condition (Temp. or Standby ECN only)
[] Yes (fill out Blk. 11b)	n/a	n/a	n/a
[x] No (NA Blks. 11b, 11c, 11d)		Design Authority/Cog. Engineer Signature & Date	Design Authority/Cog. Engineer Signature & Date

13a. Description of Change

13b. Design Baseline Document? [X] Yes [ ] No

General: Added notes at total sensor error in each section about round-off.

The following sections were changed to reflect the latest design requirements or to correct temp range used for cal. test equipment:

Section 3 MCO Pressure Indicator

Corrected 3.3.4 B. xi.) Sensor Test Equipment 2 temperature effect and all value following (that were affected).

Final value 0.263 psig rounded to 0.26

Section 6 Seismic Sensor

Updated equipment to 2.0 g from 0.5 g, changed temperature range from 40-115 F to 17-120 F, and include switch threshold errors. All other sensor errors only reported for 2 g unit so no changes, except for test equipment which no longer has an associated Turn Down Ratio (TDR)

Section 7 Differential Pressure Switch

Corrected Sensor Test Equipment 2 temperature effect and all value following that were affected

Section 8 He Bottle Pressure Indicator

Changed gage range from 3000 psig to 5000 psig in all locations, and removed reference to the size of the bottle.

Added readability Rd component, Removed a copy/paste artifact Power Supply Effect. Corrected Sensor Test Equipment 1 temperature effect and all value following (that were affected). USQ: CVD-00-0091 BB 3/20/00

14a. Justification (mark one)	
Criteria Change	[]
Design Improvement	[x]
Environmental	[]
Facility Deactivation	[]
As-Found	[]
Facilitate Const	[]
Const. Error/Omission	[]
Design Error/Omission	[]

14b. Justification Details

This revision of the Cold Vacuum Drying Setpoint Determination incorporates the changes to the SC He Bottle Pressure Indicator, modifies the seismic sensor to the purchased range and increases the seismic sensor temperature range. Seismic temperature range falls within manufacturer's operating range and provides wider environmental temperatures without affecting safety function. Additionally, this revision includes minor corrections/additions that do not impact the final instrument error.

Design Verification methods are by independent review in accordance with ECN 6-827-01. Documentation of this review accomplished by signatures on pg 2. of this ECN. BLP 3/16/00

Design verification by independent review performed by R. Whitehurst.

15. Distribution (include name, MSIN, and no. of copies)

WC Alaconis	R3-86	(1)	DA King	S1-53	(1)
JR Brehm	R3-26	(1)			
CS Haller	R3-86	(1)	SNF Startup Library	B2-64	(1)
HM Chafin	R3-86	(1)	SNF CVD Satellite Library	X3-25	(1)
R Whitehurst	R3-86	(1)	SNF Project Files	R3-11	(1)
BL Philipp	R3-86	(1)	A. Artzer CVD Library	R3-86	(1)
CR Miska	R3-86	(1)			

RELEASE STAMP

DATE: MAR 21 2000 HANFORD RELEASE STA. 4 ID. 2

A-7900-013-2 (05/96) GEF095

A-7900-013-1

ENGINEERING CHANGE NOTICE	Page 2 of 2	1. ECN (use no. from pg. 1) No. 658734

16. Design Verification Required	17. Cost Impact N/A					18. Schedule Impact (days) N/A	
	ENGINEERING			CONSTRUCTION			
[X] Yes	Additional	[]	$	Additional	[] $	Improvement	[]
[] No	Savings	[]	$	Savings	[] $	Delay	[]

19. Change Impact Review: Indicate the related documents (other than the engineering documents identified on Side 1) that will be affected by the change described in Block 12. Enter the affected document number in Block 19.

SDD/DD	[X]	Seismic/Stress Analysis	[]	Tank Calibration Manual	[]
Functional Design Criteria	[]	Stress/Design Report	[]	Health Physics Procedure	[]
Operating Specification	[]	Interface Control Drawing	[]	Spares Multiple Unit Listing	[]
Criticality Specification	[]	Calibration Procedure	[]	Test Procedure/Specification	[X]
Conceptual Design Report	[]	Installation Procedure	[]	Component Index	[]
Equipment Spec.	[]	Maintenance Procedure	[]	ASME Coded Item	[]
Const. Spec.	[]	Engineering Procedure	[]	Human Factor Consideration	[]
Procurement Spec.	[]	Operating Instruction	[]	Computer Software	[]
Vendor Information	[]	Operating Procedure	[]	Electric Circuit Schedule	[]
OM Manual	[]	Operational Safety Requirement	[]	ICRS Procedure	[]
FSAR/SAR	[X]	IEFD Drawing	[]	Process Control Manual/Plan	[]
Safety Equipment List	[X]	Cell Arrangement Drawing	[]	Process Flow Chart	[]
Radiation Work Permit	[]	Essential Material Specification	[]	Purchase Requisition	[]
Environmental Impact Statement	[]	Fac. Proc. Samp. Schedule	[]	Tickler File	[]
Environmental Report	[]	Inspection Plan	[]		[]
Environmental Permit	[]	Inventory Adjustment Request	[]		[]

20. Other Affected Documents: (NOTE: Documents listed below will not be revised by this ECN.) Signatures below indicate that the signing organization has been notified of other affected documents listed below.

Document Number/Revision	Document Number/Revision	Document Number Revision
none		

21. Approvals

	Signature	Date		Signature	Date
Design Authority	R Whitehurst R Whitehurst per telecon	2-16-00	Design Agent		
Cog. Eng.			PE		
Cog. Mgr.	CS Haller	3/20/00	QA		
QA	~~HM Chafin~~ Robert Rowlands	3/16/00	Safety		
Safety (Nuclear)	JR Brehm	3/20/00	Design		
Environ.			Environ.		
Other			Other		
WC Alaconis		3/20/00			
CR Miska		3/16/00	DEPARTMENT OF ENERGY		
BL Philipp	Barbara Philipp	3/16/00	Signature or a Control Number that tracks the Approval Signature		
			ADDITIONAL		

SNF-4451
Revision 2

Cold Vacuum Drying (CVD) Set Point Determination

Prepared for the U.S. Department of Energy
Assistant Secretary for Environmental Management

Project Hanford Management Contractor for the
U.S. Department of Energy under Contract DE-AC06-96RL13200

Fluor Hanford
P.O. Box 1000
Richland, Washington

Approved for public release; further dissemination unlimited

SNF-4451
Revision 2
ECN 658734

Cold Vacuum Drying (CVD) Set Point Determination

BL Philipp
COGEMA Engineering Corporation

Date Published
March 2000

Prepared for the U.S. Department of Energy
Assistant Secretary for Environmental Management

Project Hanford Management Contractor for the
U.S. Department of Energy under Contract DE-AC06-96RL13200
Fluor Hanford
P.O. Box 1000
Richland, Washington

Release Approval 3/21/00 Date

DATE: MAR 21 2000
STA. 4
HANFORD RELEASE
ID: 2.
Release Stamp

Approved for public release; further dissemination unlimited

LEGAL DISCLAIMER

This report was prepared as an account of work sponsored by an agency of the United States Government. Neither the United States Government nor any agency thereof, nor any of their employees, nor any of their contractors, subcontractors or their employees, makes any warranty, express or implied, or assumes any legal liability or responsibility for the accuracy, completeness, or any third party's use or the results of such use of any information, apparatus, product, or process disclosed, or represents that its use would not infringe privately owned rights. Reference herein to any specific commercial product, process, or service by trade name, trademark, manufacturer, or otherwise, does not necessarily constitute or imply its endorsement, recommendation, or favoring by the United States Government or any agency thereof or its contractors or subcontractors. The views and opinions of authors expressed herein do not necessarily state or reflect those of the United States Government or any agency thereof.

This report has been reproduced from the best available copy.

Printed in the United States of America

Total Pages: 52

RECORD OF REVISION	(1) Document Number SNF-4451	Page 1

(2) Title

COLD VACUUM DRYING SETPOINT DETERMINATION

CHANGE CONTROL RECORD

(3) Revision	(4) Description of Change - Replace, Add, and Delete Pages	Authorized for Release	
		(5) Cog. Engr.	(6) Cog. Mgr. Date
0	(7) EDT No. 626816 - Original Release	R Whitehurst 6/9/99	T Choho 6/9/99
0A	ECN No. 654048 - Page Replacement for changing calibration period for TSH-1*28, 1*29 from 1 year to 1 quarter	R Whitehurst 9/9/99	T Choho 9/9/99
1	ECN No. 657878 Re-format. Incorporate ECN 654048 and 654678	R Whitehurst 1/3/00	T Choho 1/10/00
2 RS	ECN No. 658734 Modify seismic sensor and temp range, Change bottle gauge from 0-3000 to 0-5000, correct temp used for calibration equipment, plus minor edits.	R Whitehurst R Whitehurst per Telecon R. J. Shapley 3/16/00	C Haller C Haller

Cold Vacuum Drying (CVD)

Set Point Determination

Project W-441

SNF-4451

January 3, 2000

Barbara L. Philipp
Barbara L. Philipp
Electrical I&C Engineering
COGEMA Engineering Corporation

03/16/00
Date

R Whitehurst per telecon B.L. Shipley
Technical Reviewer
Richard Whitehurst II
Technical Integration
Fluor Daniel Hanford, Incorporated

3/16/00
Date

Contents

1 INTRODUCTION 6

1.1 GENERAL 6
1.2 SUMMARY OF RESULTS 7

2 MCO VACUUM PRESSURE TRANSMITTER TO SCIC 8

2.1 VACUUM SET POINT IDENTIFICATION 8
2.1.1 Function 8
2.2 PLANT OPERATING CONDITIONS 8
2.2.1 Design-basis event conditions 9
2.3 ABSOLUTE PRESSURE TRANSMITTER (PT-1*08, PT-1*10) 10
2.3.1 Instrument Data 10
2.3.2 Reference Specifications 10
2.3.3 Project Specifications 10
2.3.4 Uncertainty Terms that Affect Set Point Determination 11
2.4 FRAMATOME STAR SYSTEM 13
2.4.1 Processor Module 13
2.4.2 Project Specifications 13
2.4.3 Uncertainty Terms that Affect Set Point Determination 14
2.5 TOTAL LOOP UNCERTAINTY - 12 TORR TRIP SIGNAL LOOP (SC) 15
2.6 SET POINT DETERMINATION 15
2.7 DELTA PRESSURE ACCURACY 16
2.7.1 Uncertainty Terms that Affect Accuracy 16

3 MCO PRESSURE TRANSMITTER TO SCIC 18

3.1 SET POINT IDENTIFICATION 18
3.1.1 Vacuum Trip 18
3.1.2 MCO Low Pressure Trip 18
3.2 PLANT OPERATING CONDITIONS 19
3.2.1 Vacuum Trip - Accidents and responses 19
3.2.2 Low Pressure Trip - Accidents and responses 19
3.3 GAUGE PRESSURE TRANSMITTER (PT-1*36, PT-1*37) 19
3.3.1 Instrument Data 19
3.3.2 Reference Specifications 19
3.3.3 Project Specifications 19
3.3.4 Calibration 20
3.4 FRAMATOME STAR SYSTEM 22
3.4.1 Processor Module 22
3.4.2 Project Specifications 22
3.4.3 Uncertainty terms that affect Calibration 22
3.5 TOTAL LOOP UNCERTAINTY - SAFETY CLASS LOOP 24
3.6 SET POINT DETERMINATION 24

4 TEMPERATURE SWITCH / TRANSMITTER TO SCIC 25

4.1 SET POINT IDENTIFICATION 25
4.1.1 TW Annulus Water Temperature 25
4.1.2 High Bay Temperature 25
4.2 PLANT OPERATING CONDITIONS 25
4.2.1 TW Annulus Water Temperature 25
4.2.2 High Bay Temperature 25
4.3 TEMPERATURE SWITCH / TRANSMITTER (TSH-1*28, 1*29, TSHH-1*38, 1*39) 26
4.3.1 Instrument Data 26
4.3.2 Reference Specifications 26
4.3.3 Project Specifications 26
4.3.4 Calibration 26
4.4 SET POINT DETERMINATION 29

5 MINIMUM PURGE FLOW TRANSMITTER TO SCIC 30

5.1 SET POINT IDENTIFICATION 30
5.1.1 PWC Low Purge Flow Alarm 30
5.2 MASS FLOW TRANSMITTER (FIT-1*20, FIT-1*21) 30
5.2.1 Instrument Data 30
5.2.2 Reference Specifications 30
5.2.3 Project Specifications 31
5.2.4 Calibration 31
5.3 FRAMATOME STAR SYSTEM 33
5.3.1 Processor Module 33
5.3.2 Project Specifications 33
5.3.3 Calibration 33
5.4 TOTAL LOOP UNCERTAINTY - SAFETY CLASS TRIP SIGNAL LOOP 35
5.5 SET POINT DETERMINATION 35

6 SEISMIC MONITORS TO SCIC 36

6.1 SEISMIC SET POINT IDENTIFICATION 36
6.1.1 Function 36
6.2 PLANT OPERATING CONDITIONS 37
6.2.1 Design-basis event conditions 37
6.3 SEISMIC SENSOR (ATR-5335, ATR-5436, ATR-5537) 37
6.3.1 Servo Accelerometer 37
6.3.2 Strong Motion Recorder 38
6.3.3 Project Specifications 38
6.3.4 Uncertainty Terms that Affect Set Point Determination 38
6.4 SET POINT DETERMINATION 40

7 DIFFERENTIAL PRESSURE SWITCH 41

7.1 PRESSURE TRANSMITTER (PDIS-8022,8042,8043) 41
7.1.1 Instrument Data 41
7.1.2 Reference Specifications 41
7.1.3 Project Specifications 41

7.1.4 Calibration *42*

8 HE BOTTLE PRESSURE INDICATOR **44**

8.1 GAUGE PRESSURE INDICATOR (PI-5*02, PT-5*21, PT-5*41, PT-5*61) 44

8.1.1 Instrument Data *44*

8.1.2 Reference Specifications *44*

8.1.3 Project Specifications *44*

8.1.4 Calibration *44*

9 FLOW SWITCH **47**

9.1 FLOW SWITCH (FS-8*52) 47

9.1.1 Instrument Data *47*

9.1.2 Reference Specifications *47*

9.1.3 Calibration *47*

10 REFERENCES **49**

10.1 VENDER INFORMATION 49

10.2 HANFORD 49

List of Figures

FIGURE 2.1 ABSOLUTE PRESSURE SIMPLIFIED BLOCK DIAGRAM 8

FIGURE 3.1 ROSEMOUNT GAUGE PRESSURE SIMPLIFIED BLOCK DIAGRAM 18

FIGURE 5.1 FCI MASS FLOW TRANSMITTER SIMPLIFIED BLOCK DIAGRAM 30

FIGURE 6.1 SEISMIC SENSOR SIMPLIFIED BLOCK DIAGRAM 36

FIGURE 7.1 DWYER DIFFERENTIAL PRESSURE SWITCH SIMPLIFIED BLOCK DIAGRAM 41

FIGURE 8.1 REOTEMP GAUGE PRESSURE SIMPLIFIED BLOCK DIAGRAM 44

FIGURE 9.1 W.E. ANDERSON (DWYER) VANE OPERATED FLOW SWITCH SIMPLIFIED BLOCK DIAGRAM 47

List of Tables

TABLE 1-1. SCIC TRIP SETPOINTS, INSTRUMENT ERROR, AND DELAY TIMES (2 SHEETS) 7

List of Acronyms and Abbreviations

AL	Analytical Limit
AU	Accuracy Uncertainty
AV	Allowable Value
AVSTM	Allowable Value Setpoint Trip Margin
β	Truncation error
B	Bias
CS	Calibrated Span
CU	Channel Uncertainty
DAC	Data Acquisition
DR	Drift Effect
HE	Humidity Effect
FS	Full Scale
MCS	Monitoring and Control System
mR	milli-Rad
MTE	Measurement and Test Equipment
NPH	National Phenomena Hazard
PC	Performance Category:
Psig	Pounds per Square Inch – Gauge
PSE	Power Supply Effect
RA	Relative Accuracy
RD	Reading Error
Rdg	Reading
RE	Radiation Effect
RH	Relative Humidity
SA	Setting Accuracy
SC	Safety Class
SCC	Standard cubic centimeters
SCIC	Safety Class Instrumentation and Controls
SE	Seismic Effect
SMTE	Sensor Measurement and Test Equipment Effect
SP	Static Pressure Effect
TDR	Turn Down Ratio
TE	Temperature Effect
TID	Total Integrated Dose
TS	Trip Setpoint
URL	Upper Range Limit
VDC	Volts – Direct Current

1 Introduction

1.1 General

The Safety Class Instrumentation and Control (SCIC) system provides active detection and response to process anomalies that, if unmitigated, would result in a safety event. Specifically, actuation of the SCIC system includes two portions. The portion which isolates the MCO and initiates the safety-class helium (SCHe) purge, and the portion which detects and stops excessive heat input to the MCO on high tempered water MCO inlet temperature. For the MCO isolation and purge, the SCIC receives signals from MCO pressure (both positive pressure and vacuum), helium flow rate, bay high temperature switches, seismic trips and time under vacuum trips

The SCIC system will isolate the MCO and start a SCHe system purge if any of the following occur.

A. Manually initiated isolation and purge from one of the SCHe "isolation" and "purge" buttons (administratively controlled).

B. Exceeding 8 hours at vacuum the first vacuum cycle or 4 hours at vacuum all subsequent vacuum cycles without re-pressurizing the MCO for a minimum of 4 hours. This is referred to as the 8/4/4 requirement and provides thermal equilibrium within the MCO.

C. MCO is below atmospheric pressure and the helium flow is below the minimum required to keep hydrogen less than 4% by volume. When MCO pressure is below 12 torr there is insufficient hydrogen to exceed the 4% level and therefore no purge is required. A five minute time delay on low flow allows flow to be stopped in order to reach < 12 torr.

D. During the transition from above atmosphere to vacuum, time to reach less than –11.7 psig (155 torr) shall not exceed 5 minutes.

E. During the transition from below -11.1 psig (~185 torr) back to greater than 0.5 psig pressure, the time shall not exceed 5 minutes.

F. MCO reaches an incorrect pressure state without adequate, verified purge volume. The MCO must be maintained above a positive pressure (approximately 0.5 psig) to prevent oxygen ingress unless a purge of adequate volume has been completed. During bulk water draining, the MCO must remain above atmospheric pressure.

G. Bay temperature exceeds the high temperature trip point of 105 °F which would impact safety class instrument calibration.

H. Seismic event of sufficient magnitude (below the *Uniform Building Code* levels).

Set point determination is required for trips C through H.

Set points determination for additional safety-significant sensors used by the HVAC system or the SCHe system are also.required.

1.2 Summary of Results

Table 1-1. Instrument Error

Safety Class or Safety Significant trip or alarm	Field sensor	Total instrument error	Parameter limit	SCIC trip setpoint
MCO 12-torr purge bypass	PT 1*08, 1*10	2 torr with 2 torr system drop	≤ 12 torr	≤ 8.0 torr
MCO high pressure	PT 1*36, 1*37	0.26 psig	≤ 25 psig	≤ 12 psig
MCO low pressure	PT 1*36, 1*37	0.26 psig	≥ 0.24 psig	≥ 0.5 psig
Vacuum limit timer	PT 1*36, 1*37	0.26 psig	≥ 0 psig	≥ 0.26 psig
MCO pressure decay fail	PT 1*36, 1*37	0.26 psig and 0.3 psig	≥ 0.24 psig and ≤ -11.4 psig	≥ 0.5 psig and ≤ -11.7 psig
MCO pressure rise fail	PT 1*36, 1*37	0.3 psig and 0.26 psig	≤ -10.8 psig and ≥ 0.24 psig	≤ -11.1 psig and ≥ 0.5 psig
TW annulus water temperature	TSH 1*28, 1*29	1.9 °C	≤ 50 °C	≤ 48.1 °C
High bay temperature	TSHH 1*38, 1*39	5.6°F	≤ 95 °F	≤ 89 °F
MCO pre-purge	FIT 1*20, 1*21	0.4 scfm	≥ 8.0 scfm	≥ 8.4 scfm
MCO low purge flow	FIT 1*20, 1*21	0.4 scfm	≥ 0.7 scfm	≥ 1.1 scfm
Seismic	ATR 5235, 5336, 5437	0.01g	≤ 0.06 g	≤ 0.05 g
HVAC delta-pressure switch	PDIS-8022, 8042, 8043	0.013 in H_2O		
SCHe Bottle Pressure	PI-5*02, 5*21, 5*41, 5*61	110 psig		
HVAC Flow switch	FS-8*52	120 scfm		

MCO Vacuum transmitter

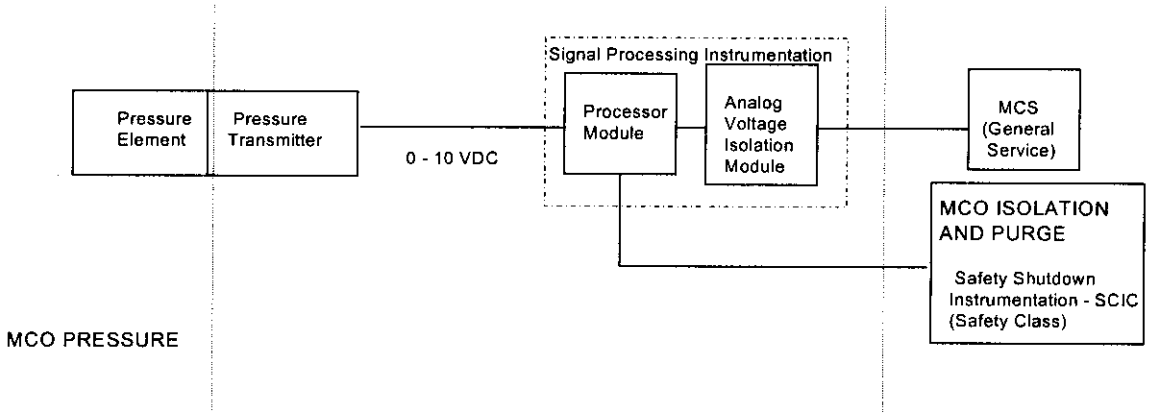

2 MCO vacuum pressure transmitter to SCIC

Figure 2.1 Absolute Pressure Simplified Block Diagram

2.1 Vacuum Set Point Identification

During the Drying mode, the SCIC system will isolate the MCO and start a SCHe system purge if the MCO is below atmospheric pressure and the helium flow is below the minimum required to keep hydrogen less than 4% by volume. When MCO pressure is below 12 torr there is insufficient hydrogen to reach flammable conditions upon an air ingress and therefore no purge is required. The 12 torr limit is the analytical limit for the vacuum pressure monitors PT 1*08, PT 1*10.

2.1.1 Function

A five-minute time delay on low flow allows flow to be stopped in order to reach < 12 torr. Once pressure increases above the 12 torr parameter limit, there is an 2 minute delay to allow a re-start of flow. A trip will occur after this 2 minutes if flow is not above the minimum required or pressure is not less than 12 torr.

2.2 Plant Operating Conditions

During the Drying Mode, the Safety Class Instrumentation and Control System (SCIC) has a MCO Vacuum Timer (initialized to 8 hours) that is used to verify that the Monitoring and Control System (MCS) operates each of the vacuum drying steps within the correct time frame. The MCS operates a continuous purge of helium (at a rate of approximately 1.5 scfm) through the MCO during the initial vacuum Drying mode. The helium purge of 1.5 scfm is maintained to assure that hydrogen does not accumulate. This flow rate establishes a concentration inside the MCO which would be less than ~4% (not including sensor error) for boundary fuel. This ensures that the minimum required TSR of 1.1 scfm (parameter limit plus setpoint error) is not violated. This mode of operation is continued until the MCO is dried to a point that allows a pressure reduction to below 12 torr for a maximum time period of 8 hours.

MCO Vacuum transmitter

Ideally, the system will remain below 12 torr for the entire 8 hours. However, if pressure can not be reduced to less than 12 torr within the 8 hour period, the operator can use the MCS to proceed to the thermal reset. During the thermal reset, the MCS isolates the vacuum pump and initiates a backfill of the MCO with helium. It increases the MCO pressure to 1 psig, and maintains a helium purge of approximately 1.5 scfm for 4 hours to reduce thermal gradients within the fuel. The four hour thermal re-set is a safety requirement.

Following the helium backfill and purge for 4 hours, the MCO vacuum timer is re-set to 4 hours and a second evacuation of the MCO is performed. -The maximum time for the second and any subsequent evacuations is 4 hours. Each subsequent evacuation is followed by a 4-hour minimum duration of helium backfill and purge.

Once the condenser is no longer removing water, the condenser is isolated, the flow is routed through a condenser bypass line, and the vacuum pump operates until pressure equalizes based on the minimum helium flow injection. A short duration is allowed to secure the purge and reach a pressure below 12 torr. Once 12 torr is reached, operation without helium purge is allowed and pressure is expected to be below 0.5 torr. The MCO pressure is monitored and upon reaching a pressure of < 0.5 torr, the MCO is isolated. At this point, a dryness verification test is performed by means of a pressure rebound test.

If the pressure rises above 3 torr within an hour (pressure rebound test), insufficient drying has taken place and more drying is required. More vacuum pumping is performed if the test fails. Once the MCO passes the pressure rebound test, an evacuation to less than 30 torr for up to 28 hours is then conducted with the expected system base pressure of 0.1 torr is achieved. This is called the "PROOF" mode of operation. The proof mode requires the use of the vacuum pump only, while a residual gas analyzer samples the build-up of impurities within the MCO atmosphere during this operation. Multiple faulted conditions could result in water addition to the MCO, therefore a second and final rebound test is conducted at the end of the proof mode. This post drying operation (i.e., "PROOF" mode or mode 6) at 46 °C is utilized to verify that 200 g (0.44 lb) of water or less is in the MCO prior to shipment to the CSB (see HNF-1851, *Cold Vacuum Drying Residual Free Water Test Description*).

2.2.1 Design-basis event conditions

1. The SCIC will initiate a trip during Drying mode if the MCO pressure exceeds the set point for the 12 torr parameter limit during the 8 hour vacuum interval or the 4 hour vacuum intervals for more than 2 minutes.

2. The SCIC will initiate a trip during Proof mode if the MCO pressure exceeds the set point for the 12 torr parameter limit

2.3 Absolute Pressure Transmitter (PT-1*08, PT-1*10)

The sensor chosen to monitor pressure for the 12 torr analytical limit is a high accuracy, temperature regulated Baratron™ Absolute Pressure Transmitters from MKS Instruments. This device is designed for industrial vacuum applications, and comes standard with Factory Mutual Approvals for a NEMA-4 housing.

2.3.1 Instrument Data

Name: Baratron Absolute Pressure Transmitter
Manufacturer: MKS Instruments, Inc.
Model Number: 427A A 00100
Type: High Accuracy, Temperature Controlled (45 °C) Absolute Pressure Transmitter

2.3.2 Reference Specifications

(Bulletin 400-10/96, 1996 - MKS Instruments, Inc.)

Range: 0 to 100 Torr
Resolution: 1×10^{-4} of Full Scale
Accuracy: 0.15% of Reading ± temperature coefficient.
Temperature Effect: Zero 0.007% FS/°C
Span 0.020% Rdg/°C
Temperature Limits: 15 - 40 °C (60 - 105 °F)
Uncertainty below range 15°C (60°F) = ± 0.05 torr
(letter from R. Traverso MKS Applications Engineer 1/26/98)
Power Supply: ± 15 VDC ± 5%
Input/Output: Range: 0.0 to 10.0 VDC
Sensor Overpressure limit: 35 psia
Factory Mutual Approvals: Explosion-proof: Class 1 Division 1&2, Group C & D
Calibration Interval: 1 year between calibrations

2.3.3 Project Specifications

The project safety specifications for the 12 torr sensor include the following:

Safety Classification: Safety Class (SC)
Performance Category: PC-3 (for pressure boundary only)
Environmental Qualification: Environmental Condition B (Certified to 105 °F)
NPH Design Requirements: Seismic Condition B for boundary only
Required Safety Functions: Pressure boundary integrity, input to SCIC for 12 torr trip and pressure rebound test results

---

™ Baratron is a registered trademark of MKS Instruments, Inc, Andover, MA.

MCO Vacuum transmitter

2.3.4 Uncertainty Terms that Affect Set Point Determination

A. Assumptions
   i.) Turn Down Ratio = 1 (transmitter will have a full span of 100 Torr)
   ii.) Calibrations performed at ambient 72 ± 8 °F or 64 – 80 °F
   iii.) Min/max temperature range is 40 – 115 °F
   iv.) Drift: ± 1% Calibrated Span (CS) per year
   v.) Calibrated Span (CS) = 100 Torr

B. Sensor Uncertainty
   i.) Relative Accuracy (RA)
      Given: RA = 0.15% Reading (Rdg)

   ii.) Static Pressure (SP)
      SP = 0% CS
         Basis: Assumed zero for pressures <35 psi.
         Sensor maintains RA = ±0.15% of Rdg or 120% Full Scale whichever is larger up to 35 psi

   iii.) Humidity Effect (HE)
      HE = 0% Calibrated Span
         Basis: Housed in NEMA 4 enclosure

   iv.) Temperature Effect (TE)
      Given: TE_s = ± 0.020% Rdg/°C for Span (100 Torr)
         TE_z = ± 0.007% FS/°C for Zero (0 Torr)
         Uncertainty below temp range of 15°C (60°F) = ± 0.05 torr
      With TDR = 1, CS = Span = 100 Torr

      Assume worst case Rdg = 100 TE_s = 0.02% CS/°C
      TE_z = 0.007% CS/°C

      Combining terms (+)

      Temp Effect = 0.007 %*FS/°C + 0.02%*Rdg/°C = 0.027% CS/°C

      Temp Uncertainty = 0.027% CS/°C + 0.05 * 100%/100torr (converts to CS since calibrated range is 100 torr)
      = 0.027% CS/°C + 0.05% CS

      Assume Tmax = 105 °F
      Tnorm (lower) = 72-8 = 64°F

      Therefore Tdelta = 41 Δ°F = 22.8Δ°C

i.e., Temp Uncertainty = (0.007*FS*dT + 0.02*Rdg*dT + 0.05*FS)%=
(0.007*100* 22.8°C + 0.02* 100 torr* 22.8°C + 0.05*100)/100
= 0.666% CS

v.) Radiation Effect (RE)

Given: Dose Rate = 8.5mR/hr
Total Integrated Dose = 8.5 mR/hr * 43800 hr = 372,300 mR
No Radiation Effect Data, assumed zero because relatively small dose
Assume: RE = ±0%CS

vi.) Power Supply Effect (PSE)
Given: No PSE while supply voltage maintained at 15 VDC ±5%
PSE = 0%

vii.) Seismic Effect (SE)
No credit for this device is taken during or after a seismic event
SE = 0%

viii.) Sensor Measurement and Test Equipment Effect (SMTE)
Test Equipment1 -Fluke 45, DC voltage mode with a 5 digit display
Relative accuracy - measurement and test equipment
RA_{MTE1} = 0.025%Rdg + 2 digits
= 0.025%*(100torr Rdg /(100torr/CS)) + 0.002V/(10V/CS) *100
= ±0.045%CS
Relative accuracy – calibration standard
RA_{STD1} = 0%CS
RD1 = 0%CS
SA1 = (0.025/10)*100 = 0.25%CS (accuracy/upper range limit (10VDC) * CS of instrument (100 torr)
$MTE1 = (RA_{MTE1}^2 + RA_{STD1}^2 + RD1^2 + SA1^2)^{1/2}$
$MTE1 = (0.045^2 + 0^2 + 0^2 + 0.25^2)^{1/2} = 0.254$ %CS

Test Equipment2, Heise PTE-1 with HQS-2 sensor (0-100 Torr)
RA_{MTE2} = ±0.1%CS
RA_{STD2} = ± 0.01%CS
RD2 = 0%CS
SA2 = 0%CS
$MTE2 = (RA_{MTE2}^2 + RA_{STD2}^2 + RD2^2 + SA2^2)^{1/2}$
$MTE2 = (0.1^2 + 0.01^2 + 0^2 + 0^2)^{1/2} = 0.1005$%CS

SMTE = MTE1 + MTE2 = 0.254 + 0.1005 = 0.355%CS

ix.) Total Sensor Uncertainties

The assumed drift term DR will be taken as a bias (conservative option).

$$e^{+} = [(RA+TE)^2 + SP^2 + HE^2 + RE^2 + PSE^2 + SE^2 + SMTE^2]^{1/2} + DR$$
$$= [(0.15 + 0.666)^2 + 0 + 0 + 0 + 0 + 0 + (.355)^2]^{1/2} + 1 = 1.9\%CS$$

$$e^{-} = -([(RA+TE)^2 + SP^2 + HE^2 + RE^2 + PSE^2 + SE^2 + SMTE^2]^{1/2} + DR)$$
$$= -([(0.15 + 0.666)^2 + 0 + 0 + 0 + 0 + 0 + (.355)^2]^{1/2} + 1) = -1.9\%CS$$

The error associated with the sensor (e_{sens}) is as follows:

$$e_{sens} = \pm 1.9\%CS$$

2.4 Framatome STAR System

2.4.1 Processor Module

2.4.1.1 Instrument Data

Name: Processor Module
Manufacturer: Framatome Technologies
Model Number: 1225275-002
Type: Signal Processing Module

2.4.1.2 Reference Specifications

(1960501R 5/96 - Framatome Technologies)

Range: 0 to 10 VDC
Resolution: 14 bits (DAC)
Drift: ±2 mVDC = ±0.02 % Full Scale
Accuracy: ±0.14% of Full Range (Analog Input)
±0.1% of Full Range (Analog Output)
Analog Input/Output: Range: 0.0 VDC to 10.0 VDC
Calibration Interval: 6 months between calibrations

2.4.2 Project Specifications

Safety Classification: Safety Class (SC)
Performance Category: PC-3
Environmental Qualification: Environmental Condition B
NPH Design Requirements: Seismic Condition C
Required Safety Functions: H2 Explosion prevention; Runaway Reaction Prevention

MCO Vacuum transmitter

2.4.3 Uncertainty Terms that Affect Set Point Determination

A. Assumptions
- i.) Turn Down Ratio = 1
- ii.) Calibrations performed at ambient 72 ± 8 °F or 64 – 80 °F
- iii.) Min/max design temperature is 40 – 115 °F
- iv.) Calibrated Span (CS) = Full Scale = 10 VDC
- v.) Processor Module input error calculation multiplier factor = 1

B. Channel Uncertainty Safety Class Trip Signal

i.) Drift (DR)
DR1 = 0.02
DR = ± 0.02 % CS

ii.) Relative Accuracy (RA)
Assume calculation error multiplier = β = 1.0 (few internal calculations and error introduced by data conversions)
Given: RA = β*$Ra_{a\text{-}in}$
= ±(0.14%) Full Range (for range 40 – 140 °F)
RA = ±0.14% CS (for range 40 – 140 °F)

iii.) Static Pressure (SP)
SP = 0% CS
Basis: Not a pressure sensor, not subject to the pressure effects of the process

iv.) Humidity Effect (HE)
HE = 0% CS
Basis: Housed in NEMA 4 enclosure

v.) Temperature Effect (TE)
Given: Reference accuracy is certified for range 40 – 140 °F
And design range is 40 –115 °F)
TE = 0%CS

vi.) Radiation Effect (RE)
Given: Dose Rate = 8.5mR/hr
Total Integrated Dose = 8.5 mR/hr * 43800 hr = 372,300 mR
Radiation Effect Data says there is no effect to 10,000,000 mR TID
Because relatively small dose (based on HNF-SD-SNF-DRD-002, Rev.1)
Assume: RE = ±0%CS

vii.) Power Supply Effect (PSE)
Given: Vender information
No PSE while supply voltage maintained at 15 VDC ±10%
PSE = 0%

MCO Vacuum transmitter

viii.) Seismic Effect (SE)
Device is qualified per IEEE 344-1987 to withstand 17 g seismic event
Design Basis event is postulated as 0.35 g
SE = 0%

ix.) Sensor Measurement and Test Equipment Effect (SMTE)

Test Equipment1: Fluke 45, DC Volts, 5 digit display
RA_{MTE1} = 0.025%Rdg + 2 digits = 0.025% CS + 0.02%CS
= ±0.045%CS (relative accuracy of MTE)
Note: 0.025%Rdg for a 100 torr reading is 0.025% CS

RA_{STD1} = 0%CS (relative accuracy of standard)
RD1 = 0%CS
SA1 = (0.025/10)*100 = 0.25%CS
$MTE1 = (RA_{MTE1}^2 + RA_{STD1}^2 + RD1^2 + SA1^2)^{1/2}$
$MTE1 = (0.045^2 + 0^2 + 0^2 + 0.25^2)^{1/2} = 0.254$ %CS

SMTE = MTE1 = 0.254 %CS

x.) Total Uncertainties – Safety Class Trip Signal

$e^+ = [DR^2 + RA^2 + SP^2 + HE^2 + TE^2 + RE^2 + PSE^2 + SE^2 + SMTE^2]^{1/2}$
$= [0.02^2 + 0.14^2 + 0 + 0 + 0 + 0 + 0 + 0 + 0.254^2]^{1/2} = 0.291$%CS

The error associated with the processor e_{proc} is as follows:e_{proc} = ±0.291%CS

2.5 Total Loop Uncertainty - 12 Torr Trip Signal Loop (SC)

All bias terms are subtracted from the sensor (sens-dr) and processor (proc) error before combining terms then added back in.

Safety class channel uncertainty (CU)
$CU^+ = [e^2_{sens\text{-}dr} + e^2_{proc}]^{1/2} + DR_{sens} + B_{proc}$
$CU^+_{sc} = [0.9^2 + 0.291^2]^{1/2} + 1 + 0 = 1.95$ %CS
CU_{sc} = ±1.95%CS

2.6 Set Point Determination

A. Trip Setpoint
The Analytical Limit (AL) is the maximum pressure allowable before the trip operates.
The Trip Setpoint (TS): TS = AL – (CU+ margin)
Given: AL = 12 Torr
Margin = 2 torr (pressure drops inside the system

i.) TS_{sc} = 12 – 1.95 - 2 = 8.05 Torr (safety class trip conservative ≤8 torr)

B. Allowable Value

The allowable value (AV) provides a threshold value that can be used to assess the instruments expected performance when tested. The Allowable Value setpoint trip margin (AVSTM) is the allowance between the trip setpoint and the AV.

i.) $AV = TS + [(SMTE1^2 + SMTE2^2 + DR_{proc}^2)^{1/2} + DR_{sens}] = TS + AVSTM$

$AV = 8.05 + (0.355^2 + 0.254^2 + 0.02^2)^{1/2} + 1 = 8.05 + 0.44 + 1 = 9.49$

$AVSTM = AV - TS_{sc} = 9.48 - 8.05 = 1.44$

2.7 Delta Pressure Accuracy

2.7.1 Uncertainty Terms that Affect Accuracy

Note: Since this is a Delta Pressure over a relatively short time, several terms are no longer necessary.

A. Sensor Uncertainty

i.) Relative Accuracy (RA)

Given: RA = 0.15% Reading (Rdg)

ii.) Drift (DR) Assume DR = 0 for time interval

iii.) Framatome Input and Output Error

Processor Module input error calculation multiplier factor $\beta = 1.0$

Accuracy: ±0.14% of Full Range (Analog Input)

±0.1% of Full Range (Analog Output)

Full Range = 10 VDC <=> 100 torr

$RA_F = (\beta * RA_I^2 + RA_O^2)^{1/2}$

$RA_F = (0.14^2 + 0.1^2)^{1/2} = 0.172\%CS = 0.172\ 10/100*100/10 = 0.172$ torr

iv.) Total Sensor Delta Pressure Uncertainties

Assume 2 hour Pressure Test with No Temperature Change $\Delta T = 0$

Calibration Temperature $Tc = 72°F = T_1 = T_2$

Sensor and Readout Error on Span Measurements

Pressure rise from 5 to 7.4 torr

$SE_1 = +/- ([(RA_s)^2 + (RA_F)^2]^{1/2}$

$= +/- ([(0.0015*5.0)^2 + (0.172)^2]^{1/2} = +/- 0.172$ torr

$SE_2 = +/- ([(RA_s)^2 + (RA_F)^2]^{1/2}$

$= +/- ([(0.0015*7.4)^2 + (0.172)^2]^{1/2} = +/- 0.172$ torr

MCO Vacuum transmitter

For a pressure rise test from 5.0 torr to 7.4 torr, the error on each measurement is +/-0.17 torr. Since it is a +/- error, the maximum error would be 0.34 torr.

i.e.) 5.0 +/- 0.17 to 7.4 +/- 0.17 becomes 4.83 to 7.57 or 5.17 to 7.23

Span = 2.4 +/- 0.34 torr

SE_{rror} = +/- 0.34 torr

3 MCO pressure transmitter to SCIC

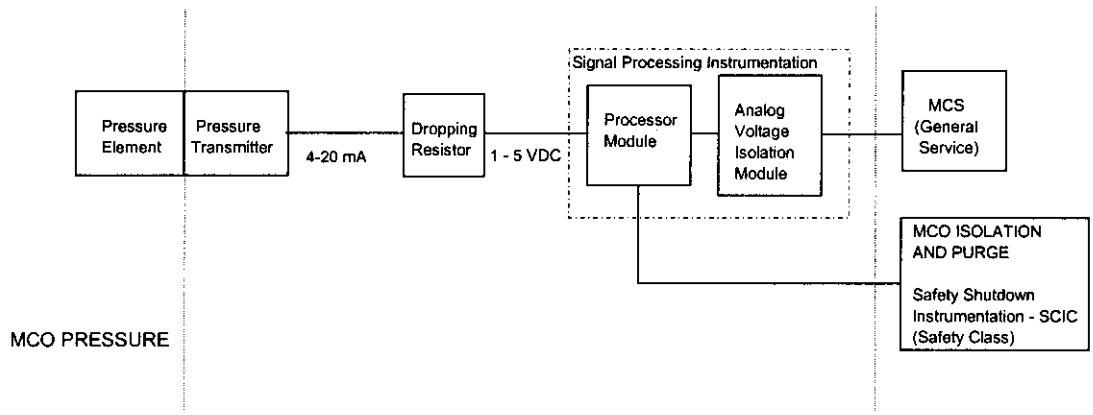

Figure 3.1 Rosemount Gauge Pressure Simplified Block Diagram

3.1 Set Point Identification

3.1.1 Vacuum Trip

Anytime during the DRYING mode (mode 5) the MCO pressure goes below –11.7 psig (~155 torr) then increases above -11.1 psig (~185 torr), the MCS will automatically increase flow (FIT 1*20) to 10 scfm, and re-pressurize the MCO to ~ 1.0 psig.- Restarting a purge must satisfy the minimum purge rate of the parameter limit (0.7 scfm) plus setpoint error. Failure to perform these steps will result in a SCIC MCO isolation and purge. During the transition from above atmosphere to vacuum, time to reach less than –11.7 psig (~155 torr) shall not exceed 5 minutes. During the transition from below -11.1 psig (~185 torr) back to greater than 0.5 psig pressure, the time shall not exceed 5 minutes. The MCO must be maintained above a positive pressure (approximately 0.5 psig) to prevent oxygen ingress unless a purge of adequate volume has been completed. During bulk water draining, the MCO must remain above atmospheric pressure. If the MCO reaches an incorrect pressure state without adequate, verified purge volume the SCIC will perform a MCO isolation and purge.

3.1.2 MCO Low Pressure Trip

The safety function of the **MCO LOW PRESSURE** trip is prevent the ingress of air (oxygen) due to process system leaks. The safety function of the SCIC, for this trip, is to actuate a SC isolation and SCHE purge prior to the MCO pressure dropping below atmospheric (preclude air ingress). Since the normal process cycles between pressure and vacuum, this trip is mode dependent.

3.2 Plant Operating Conditions

3.2.1 Vacuum Trip - Accidents and responses

During the transition from pressure operations to vacuum in MODES 5 and 6, the **"MCO PRESSURE DECAY FAIL"** trip is activated to ensure no leaks which would allow continuous air cycling and to detect a degraded vacuum pump. The MCO must reach the safety parameter limit of –11.4 psig within 5 minutes of entering vacuum (<0.24 psig). Under normal MCS response in MODES 5, 6, and 7, flow will be re-started at ~1.5 scfm in response to being above 12 torr. Once 12 torr is exceeded, the system pressure must go to >0.24 psig within 5 minutes of exceeding the safety parameter limit, timer initiation value of –10.8 psig. In the event of a significant system leak, pressure will not increase above 0.5 psig so within 5 minutes of exceeding the –11.1 psig (~185 torr) setpoint value, the SCIC will cause an isolation and SCHe purge based on the **"MCO PRESS RISE FAIL"** trip.

3.2.2 Low Pressure Trip - Accidents and responses

The MCO LOW PRESSURE trip will occur as soon as pressure drops below 0.24 psig and valve actuation will start within 0.3 seconds from this point. The isolation valves take under a second to fully open (some testing has shown 0.5 seconds) but as soon as the valve comes off the closed seat, helium starts flowing to the MCO.

3.3 Gauge Pressure Transmitter (PT-1*36, PT-1*37)

The sensor chosen to monitor pressure for the –11.7 psig (155 torr), -11.1 psig (185 torr), and 0.5 psig analytical limits is a nuclear grade Gage Pressure Transmitters from Rosemount Nuclear. This device is designed for nuclear safety class vacuum applications.

3.3.1 Instrument Data

Name: Pressure Transmitter
Manufacturer: Rosemount Nuclear
Model Number: 1153GB5 (0-125 to 0-750 in H_2O)
Type: Gauge Pressure Transmitter

3.3.2 Reference Specifications

(PDS 4302 April 1992 - Rosemount Nuclear)

Range: 0-750 in H_2O
Resolution: N/A (transmitter only)
Accuracy: ±0.25% CS
Input/Output: 4-20 mA output
Calibration Interval: 1 year between calibrations

3.3.3 Project Specifications

Safety Classification: Safety Class (SC)
Performance Category: PC-3 for boundary only
Environmental Qualification: Environmental Condition B
NPH Design Requirements: Seismic Condition B
Required Safety Functions: Pressure boundary integrity (signal is safety class, non-seismic)

MCO Pressure Transmitter

3.3.4 Calibration

A. Assumptions
   i.) Calibrations performed at ambient 72 ± 8 °F or 64 – 80 °F
   ii.) Calibration Interval = 1 year

B. Calculation Verification
   i.) Range
   URL = 750 in H_2O

   Zero = -14.7 psig (-406.9 in H_2O) Span = 12 psig (332.17 in H_2O) CS = 26.7 psig (739.07 in H_2O)

   ii.) Turn Down Ratio
   TDR = URL/CS = 750/739 = 1.015

   iii.) Drift
   ± 0.2% Upper Range Limit per 30 months
   DR = ± 0.2% * (URL/CS) = ± 0.2% CS

   iv.) Relative Accuracy (RA)
   Given: RA = ± 0.25% CS

   v.) Static Pressure (SP)
   SP = 0% CS
   Basis: ± 0.5% of Rdg/1000psi. It is systematic and can be calibrated out for a particular pressure before installation.

   vi.) Humidity Effect (HE)
   HE = 0% Calibrated Span
   Basis: 0 – 100 % relative humidity. (Housed in NEMA 4 enclosure)

   vii.) Temperature Effect (TE)
   Given: TE = ± (0.75% URL + 0.5% span) per 100 °F ambient temperature change
   T_{cal} = 72 ± 8 °F (calibration temperature range)
   T_{min} = 40 °F
   T_{max} = 105 °F
   Maximum Tdelta = T_{max} - T_{cal}(lower) - = 105°F - 64 °F = 41delta°F

   TE = ± [(0.75%)*(1.013) + 0.5%]*(41/100)
   = ±0.516 CS

viii.) Radiation Effect (RE)
Given: ± 8.0% URL at 2.2×10^7 rads TID
Given: Expected Dose Rate = 8.5mR/hr
TID = 8.5 mR/hr * 43800 hr = 372,300 mR = 3.72×10^2 rads TID
Approximate as zero because relatively small dose
RE = ±0%CS

ix.) Power Supply Effect (PSE)
Given: >0.005% of output span/volt
PSE > 0.001% CS

x.) Seismic Effect (SE)
No credit for this device is taken for a safety system shutdown during or after a seismic event
SE = 0%

xi.) Sensor Measurement and Test Equipment Effect (SMTE)

Test Equipment1 -Fluke 45, DC current mode 30 mA range with a 5 digit display
Accuracy = 0.05% Rdg + 3 digits
Max reading = 20 mA
Calibrated Span = 20 – 4 = 16 mA

Relative accuracy of MTE1
RA_{MTE1} = 0.05%*20/16 CS + (0.003mA/16)*100%CS = ±0.08125%CS
RA_{STD1} = 0%CS (NIST standard is at least 4 times more accurate)
RD1 = 0%CS (digital readout)
SA1 = (0.025/10)*100 = 0.25%CS (assume tolerance of 0.025 URL)
$MTE1 = (RA_{MTE1}^2 + RA_{STD1}^2 + RD1^2 + SA1^2)^{1/2}$
$MTE1 = (0.08125^2 + 0^2 + 0^2 + 0.25^2)^{1/2} = 0.263$

Test Equipment2, Heise PTE-1 with HQS-2 sensor (0-30psig)
Accuracy = ±0.1% span
Repeatability = ±0.02% span
Temperature Effect = ±0.004% span per °F Note: HQS-2 Ref. Temp is 70 °F
0.004*(80-70) = 0.04
CS_{test} = 30 psig
CS_{inst} = 26.7 psig

Relative accuracy of MTE2
$RA_{MTE2} = \pm(Acc^2 + Repeat^2 + TempEffect^2)^{1/2} * CS_{test}/CS_{inst}$
$= \pm(0.1^2 + 0.02^2 + 0.04)^{1/2} * 30/26.7 = 0.123\%CS$
RA_{STD2} = ± 0.02%CS
RD2 = 0%CS (digital readout)

$SA2 = 0\%CS$
$MTE2 = (RA_{MTE2}^2 + RA_{STD2}^2 + RD2^2 + SA2^2)^{1/2}$
$MTE2 = (0.123^2 + 0.02^2 + 0^2 + 0^2)^{1/2} = 0.125$

$SMTE = [MTE1^2 + MTE2^2]^{1/2} = [0.263^2 + 0.125^2]^{1/2} = 0.291$

xii.) Total Sensor Uncertainties

$e^+ = [RA^2 + DR^2 + SP^2 + TE^2 + HE^2 + RE^2 + PSE^2 + SE^2 + SMTE^2]^{1/2} + B$
$= [0.25^2 + 0.2^2 + 0 + 0.516^2 + 0 + 0 + 0.001^2 + 0 + 0.291^2]^{1/2} + 0 = 0.673\%CS$
$e^- = -[RA^2 + DR^2 + SP^2 + TE^2 + HE^2 + RE^2 + PSE^2 + SE^2 + SMTE^2]^{1/2} + B$
$= -[0.25^2 + 0.2^2 + 0 + 0.516^2 + 0 + 0 + 0.001^2 + 0 + 0.291^2]^{1/2} + 0 = -0.673\%CS$

sensor error (e_{sens})
$e_{sens} = \pm 0.673\%CS$
$e_{sens} = \pm(0.00673)*26.7$ psig $= \pm 0.18$ psig

3.4 Framatome STAR System

3.4.1 Processor Module

See section 2.4.1

3.4.2 Project Specifications

See section 2.4.2

3.4.3 Uncertainty terms that affect Calibration

A. Assumptions
- i.) Because of the random nature (direction and magnitude) of the drift, Calibration intervals of 12 months uses the same values as 6 months
- ii.) Calibrations performed at ambient 72 ± 8 °F or 64 – 80 °F
- iii.) Min/max temperatures is 40 – 115 °F
- iv.) Calibrated Span (CS) = 4 VDC
- v.) Processor Module input error calculation multiplier factor = 1

B. Calculation Verification Error to Safety Class Trip
- i.) Turn Down Ratio
  TDR = URL/CS = 10/4 = 2.5
- ii.) Drift (DR) DR = ± 0.05% CS (See section 2.4.4)
- iii.) Relative Accuracy (RA)

Assume calculation error multiplier = β = 1.0
Given: RA = β*$Ra_{a\text{-}in}$
= ±(0.14%) Full Range
RA = ±0.35% CS (for TDR = 2.5 at 40 – 140 °F)

iv.) Static Pressure (SP) SP = 0% CS (See section 2.4.4)

v.) Humidity Effect (HE) HE = 0% CS (See section 2.4.4)

vi.) Temperature Effect (TE) TE = 0%CS (See section 2.4.4)

vii.) Radiation Effect (RE) RE = ±0%CS (See section 2.4.4)

viii.) Power Supply Effect (PSE) PSE = 0% (See section 2.4.4)

ix.) Seismic Effect (SE) SE = 0% (See section 2.4.4)

x.) Sensor Measurement and Test Equipment Effect (SMTE)

Test Equipment1: Fluke 45, DC Volts, 5 digit display
RA_{MTE1} = 0.025%Rdg + 2 digits = 0.025% + 0.0004%
= ±0.0254%URL (TDR) = ±0.0635%CS

(Note the 0.004% is based on the 2 digits with a upper range limit of 5 VDC, which is 0.0002/5) x 100 = 0.004%URL)

RA_{STD1} = 0%CS (4:1 accuracy ratio)

RD1 = 0%CS (digital readout)

SA1 = (0.025)*10 = 0.25%URL = 0.25%(TDR) = 0.25 * 2.5=0.625%CS

$MTE1 = (RA_{MTE1}^2 + RA_{STD1}^2 + RD1^2 + SA1^2)^{1/2}$
$MTE1 = (0.0635^2 + 0^2 + 0^2 + 0.625^2)^{1/2} = 0.628$ %CS

SMTE = MTE1 = 0.628 %CS

xi.) Total Uncertainties – Safety Class Trip Signal

$e^+ = [DR^2 + RA^2 + SP^2 + HE^2 + TE^2 + RE^2 + PSE^2 + SE^2 + SMTE^2]^{1/2}$
$= [0.05^2 + 0.35^2 + 0 + 0 + 0 + 0 + 0 + 0 + 0.628^2]^{1/2} = 0.721$%CS

e_{sc} = ±0.721%CS
e_{sc} = 0.721/100* 4 = ±0.029 VDC

3.5 Total Loop Uncertainty - Safety Class Loop

Sensor (sens) and processor (proc) loop error

$CU^{+} = [\, e^2_{sens} + e^2_{proc} \,]^{1/2} + B_{sens} + B_{proc}$

$CU^{+}_{sc} = [\, 0.673^2 + 0.721^2 \,]^{1/2} + 0 + 0 = 0.986$ %CS

Channel Uncertainty (CU)

$CU_{sc} = \pm 0.986$%CS

$CU_{sc} = \pm 0.00986 * 26.7 = \pm 0.263$ psig

Note 3rd digit is insignificant and value was rounded i.e. $CU_{sc} = \pm 0.26$ psig

3.6 Set Point Determination

A. Trip Setpoint

The Analytical Limit (AL) is the maximum pressure allowable before the trip operates. The Trip Setpoint (TS): TS = AL – (CU+ margin)

Given: $AL_1 = -11.4$ psig (with a margin of zero)
$AL_2 = -10.8$ psig (with a margin of zero)
$AL_3 = 0$ psig (with a margin of zero)
$AL_4 = 0.24$ psig (with a margin of zero)

i.) $TS_{sc1} = -11.4 - 0.26\text{psig} = -11.66$ psig (rounded to –11.7)

ii.) $TS_{sc2} = -10.8 - 0.26\text{psig} = -11.06$ psig (rounded to –11.1)

iii.) $TS_{sc3} = 0.0 + 0.263\text{psig} = 0.263$ psig (rounded to ≥0.26

iv.) $TS_{sc4} = 0.24 + 0.263\text{psig} = 0.503$ psig (rounded to ≥0.5)

B. Allowable Value

The allowable value (AV) provides a threshold value that can be used to assess the instruments expected performance when tested. The allowance between the trip setpoint and the AV includes Drift, instrument calibration uncertainties, and any additional instrument uncertainties during normal operation that are measured during testing. The purpose for determining an AV is to provide a threshold value that can be used to assess the instrument's performance when tested. The Allowable Value setpoint trip margin (AVSTM)

i.) $AV = TS +/- [(SMTE1^2 + SMTE2^2 + DR_{sens}^2 + DR_{proc}^2)^{1/2}] = TS +/- AVSTM$

$AV = TS - (0.291^2 + 0.635^2 + 0.1^2 + 0.05^2)^{1/2} * 26.7/100$

$AV = TS - 0.707 * 26.7/100 = TS - 0.189\text{psig}$

$AVSTM = 0.189$ psig

4 Temperature switch / transmitter to SCIC

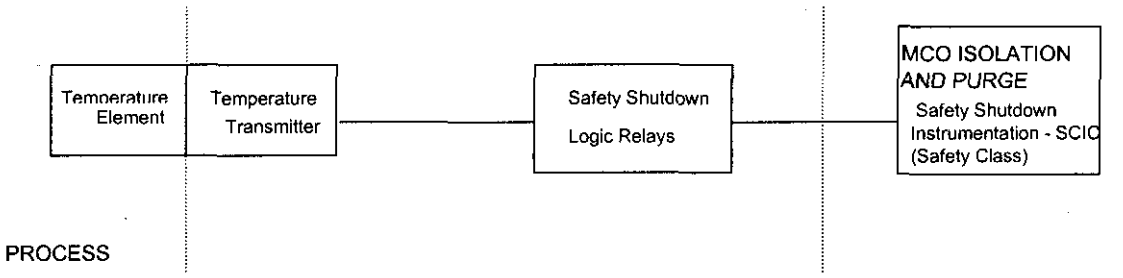

Figure 4.1 Temperature Switch / Transmitter Simplified Block Diagram

4.1 Set Point Identification

4.1.1 TW Annulus Water Temperature

The 50 °C TW Annulus Water Temperature parameter limit value is required for fuel cooling and is identified in the CVDF SAR. This trip results in contacts opening in the SCIC to de-energize the Tempered Water (TW) heater starter. The TW heater are normally controlled by the MCS through a separate starter box, power then is routed through the Train A, then Train B starters. Unless a fault condition (high temperature) occurs these SCIC starters remain closed allowing normal MCS control. This caused the 480VAC to be removed, thus de-energizing the water heater.

4.1.2 High Bay Temperature

A 95 °F bay high temperature parameter limit value is required because of the current fire hazards analysis. Additionally, a 105 °F bay high temperature parameter limit value is required to mitigate impacts to safety-class instrument calibration. 105 °F is the operational limit of the safety class Baratron pressure sensors. A high process bay temperature initiates an SCIC system trip that isolates the MCO and activates the SCHe system, thereby pressurizing and purging the MCO.

4.2 Plant Operating Conditions

4.2.1 TW Annulus Water Temperature

If a high TW (annulus) trip occurs during processing, the SCIC system shuts down the water heater. These actions are fully automatic and require no operator action.

4.2.2 High Bay Temperature

A high process bay temperature initiates an SCIC system ISO&PURGE. These actions are fully automatic and require no operator action.

4.3 Temperature Switch / Transmitter (TSH-1*28, 1*29, TSHH-1*38, 1*39)

4.3.1 Instrument Data

Name: Temperature Switch
Manufacturer: Ashcroft
Model Number: LTDN4KK00040
Type: Temperature Switch / Transmitter

4.3.2 Reference Specifications

(SW-12 – Ashcroft)

Range: 20 – 95 °C (68 – 203 °F) (SW-12 - order choice – Ashcroft)
Repeatability: ±1% span set point repeatability (SW/PI-62 4/3/95 - Ashcroft)
Accuracy: ±1% span (assume same as repeatability)
Calibration Interval: 1 month

4.3.3 Project Specifications

Safety Classification: Safety Class (SC)
Performance Category: PC-1
Environmental Qualification: Environmental Condition B
NPH Design Requirements: NA
Safety Functions: TSH-1*28 ,1*29: TW isolation for H2 Explosion prevention; Runaway Reaction Prevention (non-seismic)
TSH-1*38 ,1*39: Instrument Environmental Monitoring (temperature) for H2 Explosion prevention (non-seismic)

4.3.4 Calibration

A. Assumptions
   i.) Calibrations performed at ambient 72 ± 8 °F or 64 – 80 °F
   ii.) Min/max temperature range is 40 – 115 °F
   iii.) Calibration Interval (TSH-1*28, 1*29) = 3 month
   iv.) Calibration Interval (TSH-1*38,1*39) = 1 year

B. Calculation Verification
   i.) Range
   URL = 95 °C
   Zero = 20 °C
   Span = 75 °C
   CS = 75 °C

   ii.) Turn Down Ratio
   TDR = 1 (Fixed range, no TDR required)

Temperature Switch / Transmitter

iii.) Drift
± 1% Span per month
DR (TSH-1*28, 1*29) = ± (1% * 3 months)$^{1/2}$ = ± 1.73% CS
DR (TSH-1*38, 1*39) = ± (1% * 12 months)$^{1/2}$ = ± 3.46% CS

iv.) Relative Accuracy (RA)
Given: Accuracy = ± 1% CS and Repeatability = ± 1% CS
RA= ± (1% + 1%)$^{1/2}$
RA = ± 1.4%

v.) Static Pressure (SP)
SP = 0% CS
Basis: Temperature element is isolated from the process or exposed to environments with atmospheric pressure expected.

vi.) Humidity Effect (HE)
HE = 0% Calibrated Span
Basis: Water tight and corrosion resistant (Housed in NEMA 4,4X enclosure)

vii.) Temperature Effect (TE)
Given: TE = ± (1% span per 50 °F ambient temperature change
T_{cal} = 72 ± 8 °F (calibration temperature range)
T_{min} = 40 °F
T_{max} = 115 °F
Maximum Tdelta = T_{max} - T_{cal}(lower) = 115°F - 64 °F = 51delta°F

TE = ± 1% CS

viii.) Radiation Effect (RE)
Given: ± 8.0% URL at 2.2 x 10^7 rads TID
Given: Expected Dose Rate = 8.5mR/hr
TID = 8.5 mR/hr * 43800 hr = 372,300 mR = 3.72 x 10^2 rads TID
Approximate as zero because of mild dose
RE = ±0%CS

ix.) Power Supply Effect (PSE)
Assume
PSE = 0% CS

x.) Seismic Effect (SE)
No credit for this device is taken for a safety system shutdown during or after a seismic event
SE = 0%

Temperature Switch / Transmitter

xi.) Sensor Measurement and Test Equipment Effect (SMTE)

Test Equipment1 –AMETEK 140SE JOFRA dry block
Accuracy = ±0.3 °C
Insertion Depth Effect = ±0.1 °C
RA_{MTE1} = Accuracy + Insertion Depth Effect
RA_{MTE1} = 0.3 + 0.1 = 0.4 °C = 0.4/75 CS = 0.53% CS
RA_{MTE1} = ± 0.53% CS
RA_{STD1} = ±0.1 °C (NIST standard (RTD used for calibration)
RA_{STD1} = 0.1 °C (100/75) = 0.1% CS
RD1 = 0%CS (digital readout)
SA1 = 0.1%CS
(Assume standard temperature setpoint accuracy equal to relative accuracy)

$MTE1 = (RA_{MTE1}^2 + RA_{STD1}^2 + RD1^2 + SA1^2 + SA2^2)^{1/2}$
$MTE1 = (0.53^2 + 0.1^2 + 0 + 0.1^2)^{1/2} = 0.55\%CS$

xii.) Setpoint setting accuracy

SA = ±1.0% CS
(Assume Ashcroft temperature setpoint setting accuracy is equal to the sensor relative accuracy)

xiii.) Total Uncertainties

(TSH-1*28, 1*29)
$e^+ = [RA^2 + DR^2 + SP^2 + TE^2 + HE^2 + RE^2 + PSE^2 + SE^2 + SMTE^2 + SA^2]^{1/2} + B$
$= [1.0^2 + 1.73^2 + 0 + 1^2 + 0 + 0 + 0 + 0 + 0.55^2 + 1.0^2]^{1/2} + 0 = 2.5\%CS$
$e^- = -[1.0^2 + 1.73^2 + 0 + 1^2 + 0 + 0 + 0 + 0 + 0.55^2 + 1.0^2]^{1/2} + 0 = -2.5\%CS$
$e_{sens_1*28} = \pm 2.5\%CS = \pm(0.025 * 75) = \pm 1.88$ °C

(TSH-1*38, 1*39)
$e^+ = [RA^2 + DR^2 + SP^2 + TE^2 + HE^2 + RE^2 + PSE^2 + SE^2 + SMTE^2 + SA^2]^{1/2} + B$
$= [1.41^2 + 3.5^2 + 0 + 1^2 + 0 + 0 + 0 + 0 + 0.55^2 + 1.0^2]^{1/2} + 0 = 4.067\%CS$
$e^- = -[1.41^2 + 3.5^2 + 0 + 1^2 + 0 + 0 + 0 + 0 + 0.55^2 + 1.0^2]^{1/2} + 0 = -4.067\%CS$
$e_{sens\ 1*38} = \pm 4.067\%CS = \pm(0.0467 * 75) = \pm 3.05$ °C

xiv.) Channel Uncertainty (CU)

(TSH-1*28, 1*29)
CU_{1*28} = ±2.5%CS (calibration interval 3 months)
CU_{1*28} = ±2.5/100 * 75 = ±1.88 °C (value rounded to 1.9)

Temperature Switch / Transmitter

(TSH-1*38, 1*39)
$CU_{1*38} = \pm 4.067\%CS$ (calibration interval 1 year)
$CU_{1*38} = \pm 4.067/100 * 75 = \pm 3.05$ °C (round to 3.1)

4.4 Set Point Determination

A. Trip Setpoint - TW Annulus Water Temperature
The Analytical Limit (AL) is the maximum temperature allowable before the trip operates. The Trip Setpoint (TS)
Given: AL = 50 °C (with a margin of zero)

i.) TS = AL – (CU+ margin)
$TS_{sc\ 1*28} = 50 - (1.88 + 0) = 48.12$ °C (Calibration interval 3 months)

B. Allowable Value
The allowable value (AV) provides a threshold value that can be used to assess the instruments expected performance when tested. The purpose for determining an AV is to provide a threshold value that can be used to assess the instrument's performance when tested. The Allowable Value setpoint trip margin (AVSTM)

i.) $AV_{sc\ 1*28} = TS_{sc} + (SMTE1^2 + DR^2)^{1/2} = TS_{sc} + AVSTM$
$AV_{sc\ 1*28} = 48.12 + (0.55^2 + 1.73^2)^{1/2}\ 75/100 = 48.12 + 1.815*75/100$
$= 49.48$ °C (calibration 3 months)

C. Trip Setpoint – High Bay Temperature
The Analytical Limit (AL) is the maximum pressure allowable before the trip operates. The Trip Setpoint (TS)
Given: AL = 95 °F (with a margin of zero)
CU = 3.1°C = 5.58 °F (rounded to 5.6)

ii.) TS = AL – (CU+ margin)
$TS_{sc\ 1*38} = 95 - 5.58 = 89.42$ °F (Calibration interval 1 year)

D. Allowable Value
The allowable value (AV) provides a threshold value that can be used to assess the instruments expected performance when tested. The purpose for determining an AV is to provide a threshold value that can be used to assess the instrument's performance when tested. The Allowable Value setpoint trip margin (AVSTM)

ii.) $AV_{sc} = TS_{sc} + (SMTE1^2 + DR^2)^{1/2} = TS_{sc} + AVSTM$
$AV_{sc} = 89.42 + (0.55^2 + 3.5^2)^{1/2}\ 75/100 = 89.42 + 2.66 = 92.08$ °F (calibration 1 year)

5 Minimum Purge Flow transmitter to SCIC

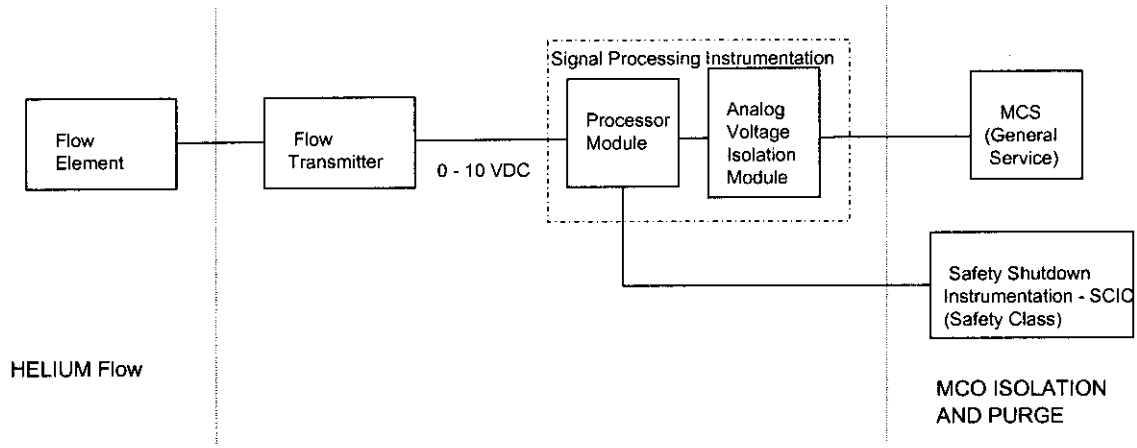

Figure 5.1 FCI Mass Flow Transmitter Simplified Block Diagram

5.1 Set Point Identification

5.1.1 PWC Low Purge Flow Alarm

This alarm signifies that, during the PWC Pre-purge or Post-purge, either there was a low-flow rate or the minimum time for the purge was not met. Manual operator action is required upon an alarm. This alarm function is defense-in-depth

5.2 Mass Flow Transmitter (FIT-1*20, FIT-1*21)

5.2.1 Instrument Data

Name: Mass Flow Meter
Manufacturer: Fluid Components Inc.
Model Number: LT87 (11E000004A2BA00)
Type: Mass Flow Transmitter

5.2.2 Reference Specifications

(Specification 12/95- FCI Fluid Components, Inc.)

Range: 0 – 10 scfm
Repeatability: 0.5% Rdg
Accuracy: ±1% Full Scale
Input/Output: 0 – 10 Volt output
Calibration Interval: 1 year between calibrations

MCO Flow Transmitter

5.2.3 Project Specifications

Safety Classification: Safety Class (SC)
Performance Category: PC-1
Environmental Qualification: Environmental Condition B
NPH Design Requirements: N/A
Required Safety Functions: Thermal Runaway and H2 Explosion prevention; Provides SCIC trip inputs. Pressure boundary integrity (signal is non-seismic)

5.2.4 Calibration

A. Assumptions
   i.) Calibrations performed at ambient 72 ± 8 °F or 64 – 80 °F
   ii.) Min/max temperature range is 40 – 115 °F
   iii.) Calibration Interval = 1 year

B. Calculation Verification
   i.) Range

   Zero = 0 scfm
   Span = 10 scfm
   CS = 10 scfm

   URL = 10 scfm

   ii.) Turn Down Ratio
   TDR = URL/CS = 1

   iii.) Drift (Qualification Report #708349 – FCI Fluid Components, Inc.)
   ± 2.2% Full Scale (FS) per year
   DR = ± 2.2% CS

   iv.) Relative Accuracy (RA)
   Given: RA = ± 3% FS for helium (letter from H. Sittinger App Engineer FCI)
   RA = ± 3% CS

   v.) Static Pressure (SP) (Qualification Report #708349 – FCI, Inc.)
   SP = ± 1% FS/50 psig
   SP = (Max pressure)(Static pressure effect)
   SP = (20 psig) (± 1% FS/50 psig)
   SP = ± 0.4% CS) Note: This is listed as a bias.

   vi.) Humidity Effect (HE)
   HE = 0% Calibrated Span
   Basis: 0 – 100 % relative humidity. (Housed in NEMA 4 enclosure)

vii.) Temperature Effect (TE)
Given: TE = ± 0% CS
Basis: This device uses temperature compensation. The stated accuracy is maintained for a process temperature range of ± 250 °F. Min/max expected temperature range is 40 – 115 °F

viii.) Radiation Effect (RE)
Given: ± 8.0% URL at 2.2×10^7 rads TID
Given: Expected Dose Rate = 8.5mR/hr
TID = 8.5 mR/hr * 43800 hr = 372,300 mR = 3.72×10^2 rads TID
Approximate as zero because relatively small dose
RE = ±0%CS

ix.) Power Supply Effect (PSE)
Assume: PSE = ±0% CS

x.) Seismic Effect (SE)
No credit for this device is taken for a safety system shutdown during or after a seismic event
SE = ±0%

xi.) Sensor Measurement and Test Equipment Effect (SMTE)

Test Equipment1 –FCI calibration laboratory instrumentation
Accuracy = 0.7% Rdg (NIST Traceable)
Max reading = 10 scfm
Calibrated Span = 10 scfm

SMTE = ±0.7% CS (worst case)

xii.) Total Uncertainties

$$e^+ = [RA^2 + DR^2 + TE^2 + HE^2 + RE^2 + PSE^2 + SE^2 + SMTE^2]^{1/2} + SP$$
$$= [3^2 + 2.2^2 + 0 + 0^2 + 0 + 0 + 0^2 + 0 + 0.7^2]^{1/2} + 0.4 = 3.785\%CS$$
$$e^- = -[RA^2 + DR^2 + TE^2 + HE^2 + RE^2 + PSE^2 + SE^2 + SMTE^2]^{1/2} + SP$$
$$= -[3^2 + 2.2^2 + 0 + 0^2 + 0 + 0 + 0^2 + 0 + 0.7^2]^{1/2} + 0.4 = -3.785\%CS$$

e_{sens} = ±3.785%CS =
e_{sens} = ±(0.03785)*10 scfm = ±0.3785 scfm

5.3 Framatome STAR System

5.3.1 Processor Module

5.3.1.1 Instrument Data

Name: Processor Module
Manufacturer: Framatome Technologies
Model Number: 1225275-002
Type: Signal Processing Module

5.3.1.2 Reference Specifications

(1960501 5/95 - Framatome)

Range: 0 to 10 VDC
Resolution: 14 bits (DAC)
Drift: ±2 mVDC = ±0.02 % Full Scale
Accuracy: ±0.14% of Full Range (Analog Input)
±0.1% of Full Range (Analog Output)
Analog Input/Output: Range: 0.0 VDC to 10.0 VDC
Calibration Interval: 12 months between calibrations

5.3.2 Project Specifications

Safety Classification: Safety Class (SC)
Performance Category: PC-3
Environmental Qualification: Environmental Condition B
NPH Design Requirements: Seismic Condition C
Required Safety Functions: H2 Explosion prevention; Runaway Reaction Prevention

5.3.3 Calibration

A. Assumptions
- i.) Turn Down Ratio = 1
- ii.) Calibrations performed at ambient 72 ± 8 °F or 64 – 80 °F
- iii.) Min/max expected temperatures is 40 – 95 °F
- iv.) Calibrated Span (CS) = Full Scale = 10 VDC
- v.) Processor Module input error calculation multiplier factor = 1

B. Channel Uncertainty Safety Class Trip Signal
- i.) Drift (DR)
  DR1 = 0.02
  DR = ± 0.02 % CS

ii.) Relative Accuracy (RA)
Assume calculation error multiplier = β = 1.0
Given: RA = β*$Ra_{a\text{-}in}$
= ±(0.14%) Full Range (for range 40 – 140 °F)
RA = ±0.14% CS (for range 40 – 140 °F)

iii.) Static Pressure (SP)
SP = 0% CS
Basis: Not a pressure sensor, not subject to the pressure effects of the process

iv.) Humidity Effect (HE)
HE = 0% CS
Basis: Housed in NEMA 4 enclosure

v.) Temperature Effect (TE)
Given: Reference accuracy is certified for range 40 – 140 °F
And expected range 40 – 95 °F)
TE = 0%CS

vi.) Radiation Effect (RE)
Given: Dose Rate = 8.5mR/hr
Total Integrated Dose = 8.5 mR/hr * 43800 hr = 372,300 mR
Radiation Effect Data says there is no effect to 10,000,000 mR TID
Because relatively small dose (based on HNF-SD-SNF-DRD-002, Rev.1)
Assume: RE = ±0%CS

vii.) Power Supply Effect (PSE)
Given: Vender information
No PSE while supply voltage maintained at 15 VDC ±10%
PSE = 0%

viii.) Seismic Effect (SE)
Device is qualified per IEEE 344-1987 to withstand 17 g seismic event
Design Basis event is postulated as 0.35 g
SE = 0%

ix.) Sensor Measurement and Test Equipment Effect (SMTE)

Test Equipment1: Fluke 45, DC Volts, 5 digit display
RA_{MTE1} = 0.025%Rdg + 2 digits = 0.025% + 0.002VDC/10VDC*100
= ±0.045%CS
RA_{STD1} = 0%CS
RD1 = 0%CS
SA1 = (0.025/10)*100 = 0.25%CS

$MTE1 = (RA_{MTE1}^2 + RA_{STD1}^2 + RD1^2 + SA1^2)^{1/2}$
$MTE1 = (0.045^2 + 0^2 + 0^2 + 0.25^2)^{1/2} = 0.254$ %CS

SMTE = MTE1 = 0.254 %CS

x.) Total Uncertainties – Safety Class Trip Signal

$e^+ = [DR^2 + RA^2 + SP^2 + HE^2 + TE^2 + RE^2 + PSE^2 + SE^2 + SMTE^2]^{1/2}$
$= [0.02^2 + 0.14^2 + 0 + 0 + 0 + 0 + 0 + 0 + 0.254^2]^{1/2} = 0.291$%CS

$e_{sc} = \pm 0.291$%CS

5.4 Total Loop Uncertainty - Safety Class Trip Signal Loop

$CU^+ = [e^2_{sens\text{-}dr} + e^2_{proc}]^{1/2} + B_{sens} + B_{proc}$

$CU^+_{sc} = [3.785^2 + 0.291^2]^{1/2} + 0.14 + 0 = 3.93$ %CS

$CU_{sc} = \pm 3.93$%CS

$CU_{sc} = \pm 0.0393 * 10 = \pm 0.393$ scfm

5.5 Set Point Determination

A. Trip Setpoint
The Analytical Limit (AL) is the minimum flow allowable before the trip operates. The Trip Setpoint (TS)
Given: AL = 0.70 scfm (with a margin of zero)

i.) TS = AL + (CU+ margin)
$TS_{sc} = 0.70 + 0.393 = 1.093$ scfm (round to 1.1)

B. Allowable Value
The allowable value (AV) provides a threshold value that can be used to assess the instruments expected performance when tested. The allowance between the trip setpoint and the AV includes Drift, instrument calibration uncertainties, and any additional instrument uncertainties during normal operation that are measured during testing. The purpose for determining an AV is to provide a threshold value that can be used to assess the instrument's performance when tested. The Allowable Value setpoint trip margin (AVSTM)

ii.) $AV_{sc} = TS_{sc} - (SMTE1^2 + SMTE2^2 + DR_1^2 + DR_2^2)^{1/2} = TS_{sc} - AVSTM$
$AV_{sc} = 1.1 - 0.1*(0.355^2 + 0.254^2 + 2.2 + 0.02^2)^{1/2} = 1.1 - 0.224 = 0.9$
AVSTM = 0.224 scfm

6 Seismic Monitors to SCIC

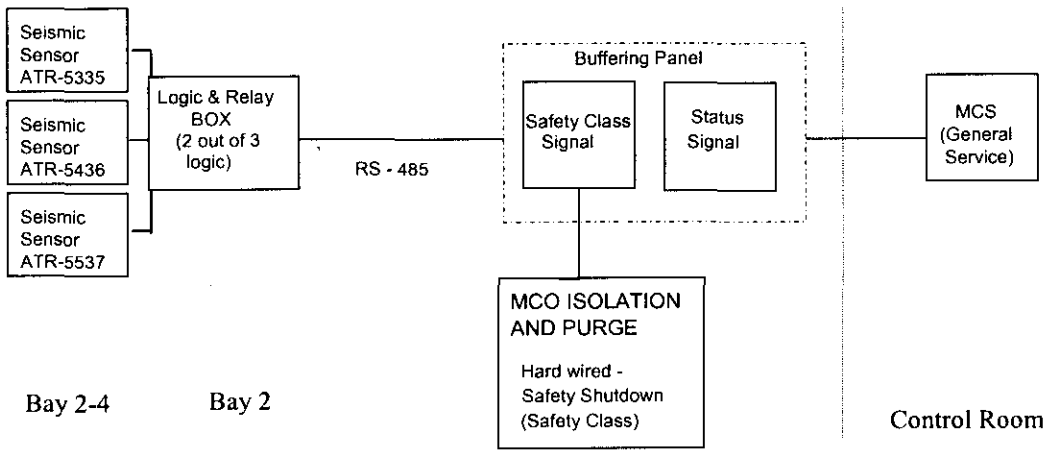

Figure 6.1 Seismic Sensor Simplified Block Diagram

6.1 Seismic Set Point Identification

The seismic monitoring trip design was based on the requirements:

1.) To reduce the seismic qualification necessary for all instruments used by the SCIC for trip functions, and
2.) To allow the Mode Switch to be located in a non-seismically-qualified location (CVDF control room).
3.) To reduce the amount of seismically-qualified piping by providing isolation of non-qualified pipe during and after a seismic event.

A 0.06g value parameter limit is being used to assure a seismic trip well in advance of a seismic event of significant magnitude to break the VPS piping that is not part of the qualified primary MCO boundary. This feature allowed all the piping and instruments outside the isolation valves to be non-seismically qualified. The 0.06g level is at a point where most people would feel the effect but no damage would occur. This level is ~ 20% of the Design Basis Event (DBE) level of 0.26g.

6.1.1 Function

Inputs from SCIC system seismic monitors provide indication of a safety-class seismic event. Seismic sensor/recorders are used to detect, record, (non-safety class function) and trip on a seismic event exceeding the setpoint (parameter limit 0.06 g, triaxial, any direction). Auctioneering logic is used to preclude fault trips by locating each of three sensors in process bays 2, 3, and 4 and by using two out of three (2/3) logic to initiate a Tempered Water (TW) trip and an MCO isolation and purge (ISO & PURGE) trip. The seismic recorder and trip components must initiate a signal to the SCIC system upon ground motion acceleration above the setpoint in order to shutdown the CVD system until equipment is verified operational. However, the seismic trips are independent of

other potions of the SCIC safety-class logic. The seismic trip directly controls the final output relay, which is either closed to allow power to the MCO isolation valves, TW heater, and PWC pumps (non-safety class function), or opened on a trip or loss of power.

6.2 Plant Operating Conditions

There are three seismic sensors/recorder: one each in Bay 2, Bay 3, and Bay 4. The two seismic logic and relay panels are located in Bay 1 to provide easy access for Operations and Maintenance. To reduce spurious trips, the three sensors are auctioneered (2/3 logic). If at least two of the three sensors alarm, a seismic trip occurs. A seismic trip de-energizes the TW heater, initiates an automatic ISO & PURGE of the MCO and de-energizes the PWC circulating pumps (non-safety class). The Seismic trips are hard-wired and always remain active.

6.2.1 Design-basis event conditions

1. The seismic portion of the SCIC is always active and will initiate a trip during all modes if 2 out of 3 of the seismic recorders detect a seismic event that exceeds 0.06 g, triaxial, any direction.

6.3 Seismic Sensor (ATR-5335, ATR-5436, ATR-5537)

The sensor chosen to monitor seismic activity is a Terra Technologies SSA Series 20 Servo Accelerometer with the GSR Strong Motion recorder.

6.3.1 Servo Accelerometer

6.3.1.1 Instrument Data

Name: SSA Series 20 Servo Accelerometer
Manufacturer: Terra Technologies Corp
Model Number: SSA-320 (triaxial configuration)
Type: Servo Accelerometer

6.3.1.2 Reference Specifications

(Specification 12/95 – Terra Technology Corp.)

Range: ±2.0 g
Linearity: ±0.2% (over ±1 g range)
Drift: ±0.05% yearly (Magnetic Stability)
Temperature Effect: ±0.00024%/°C (offset drift)
±0.023%/°C (scale factor drift)
Temperature Limits: -40°C to 70°C
Digital Threshold Stability: ±0.1% (Switch setting)
System Threshold Stability: ±3.0% (Switch setting)
Cross Axis Sensitivity: 0.0005g/g
Input/Output Noise: (RMS) 224E-6 g

Terra Technologies Seismic Recorders

Calibration Interval: yearly

6.3.2 Strong Motion Recorder

6.3.2.1 Instrument Data

Name: Strong Motion recorder
Manufacturer: Terra Technologies Corp
Model Number: GSR
Type: 12 bit

6.3.2.2 Reference Specifications

(Specification 12/95 – Terra Technology Corp.)

Range: ± 2.0- g
Digitization Error: ± 0.025% FS (12 bit)
Temperature Effect: ±0.002%/°C (temperature drift)
Temperature Limits: -10°C to 60°C
Calibration Interval: yearly

6.3.3 Project Specifications

The project safety specifications for the seismic sensor include the following:

Safety Classification: SC
Performance Category: PC-3
Environmental Qualification: Condition B
NPH Design Requirements: Seismic Condition C : Maintain critical function before, during and after Seismic event
Required Safety Functions: Seismic trip for H2 Explosion prevention
Runaway Reaction Prevention

6.3.4 Uncertainty Terms that Affect Set Point Determination

A. Assumptions
   i.) Calibrations performed at ambient 72 ± 8 °F or 64 – 80 °F
   ii.) Min/max temperature range is 17 – 120 °F
   iii.) Full Scale (FS) = Range

B. Sensor Uncertainty
   i.) Drift (DR)
   DR1 = ±0.05 %
   DR = ±0.05 % FS

ii.) Relative Accuracy (RA) (linearity)

Given: Repeatability = ±0.2% Reading (Rdg) (Worst case Rdg = 2.0 g)
Digitization Error = ±0.025% FS
Digital Threshold Stability: ±0.1% * 0.05/2 Note: Assume switch setting
System Threshold Stability: ±3.0% * 0.05/2 is 0.05g and FS is 2.0g

$RA = \pm [0.2^2 + 0.025^2 + (0.1*0.05/2)^2 + (3.0*0.05/2)^2]^{1/2} = \pm 0.215\%$ FS

iii.) Humidity Effect (HE)

HE = 0% Calibrated Span
Basis: Housed in sealed enclosure

iv.) Temperature Effect (TE)

Given: $TE_{s\text{-}od}$ = ±0.00024% Rdg/°C (-40°C to + 70°C)
$TE_{s\text{-}sd}$ = ±0.023% Rdg/°C (-40°C to + 70°C)
$TE_{g\text{-}sd}$ = ±0.002% Rdg/°C (-10°C to + 60°C)

T_{cal} = 72 ± 8 °F (calibration temperature range)
T_{min} = 17 °F T_{max} = 120 °F
Maximum Tdelta = T_{cal}(upper) - T_{min} = 80 °F - 17°F = 63delta°F 35delta°C

v.) Radiation Effect (RE)

Given: Dose Rate = 8.5mR/hr
Total Integrated Dose = 8.5 mR/hr * 43800 hr = 372,300 mR
No Radiation Effect Data, assumed zero because relatively small dose
Assume: RE = ±0%FS

vi.) Power Supply Effect (PSE)

Given: PSE = 0%

vii.) Seismic Effect (SE)

SE = 0% (Designed for seimic activity and digital)

viii.) Sensor Measurement and Test Equipment Effect (SMTE)

Test Equipment1: Fluke 45, DC Volts, 5 digit display
RA_{MTE1} = 0.025%Rdg + 2 digits = 0.025% + 0.02%
= ±0.045% FS
RA_{STD1} = 0%FS (4:1 accuracy ratio)
RD1 = 0%FS (digital readout)
SA1 = (0.025)*10 = 0.25% FS
$MTE1 = (RA_{MTE1}^2 + RA_{STD1}^2 + RD1^2 + SA1^2)^{1/2}$
$MTE1 = (0.045^2 + 0^2 + 0^2 + 0.25^2)^{1/2} = 0.254$ %FS
SMTE = MTE1 = 0.254 %FS

ix.) Total Sensor Uncertainties

$e^+ = [RA^2+DR^2 + TE^2 + SP^2 + HE^2 + RE^2 + PSE^2 + SE^2 + SMTE^2]^{1/2} + B1+B2$
$e^- = -[RA^2+ DR^2+ TE^2 + SP^2 + HE^2 + RE^2 + PSE^2 + SE^2 + SMTE^2]^{1/2} + B1+B2$
$e = [0.215^2 + 0.05^2 + (0.00024^2 + 0.023^2 + 0.002^2)*35^2 + 0 + 0 + 0 + 0 + 0+ 0.254^2]^{1/2} + 224E\text{-}6\ g + 0.0005g/g*2.0g$

$e = \pm 0.8753\%\ FS + 1224E\text{-}6\ g = \pm (0.8753/100 * 1.0 + 1224e\text{-}6)\ g$
$e_{sens} = \pm 0.009977\ g$ (Rounded to 0.01 g)

6.4 Set Point Determination

A. Trip Setpoint
The Analytical Limit (AL) is the maximum seismic activity allowable before the trip operates.
The Trip Setpoint (TS): TS = AL – (CU+ margin)

Given: AL = 0.06
Parameter Limit = PL = 0.06

i.) TS = PL - (CU+ margin)
$TS_{sc} = 0.06 - (0.01) = 0.05\ g$

B. Allowable Value
The allowable value (AV) provides a threshold value that can be used to assess the instruments expected performance when tested. The allowance between the trip setpoint and the AV includes Drift, instrument calibration uncertainties, and any additional instrument uncertainties during normal operation that are measured during testing. The purpose for determining an AV is to provide a threshold value that can be used to assess the instrument's performance when tested. The Allowable Value setpoint trip margin (AVSTM)

iii.) $AV_{sc} = TS_{sc} + (SMTE^2 + DR^2)^{1/2} = TS_{sc} + AVSTM$
$AV_{sc} = 0.05g + (0.254^2 + 0.05^2)^{1/2}\ \%FS = 0.05 + 0.002588 = 0.0526g$
AVSTM = 0.0026g

7 Differential Pressure Switch

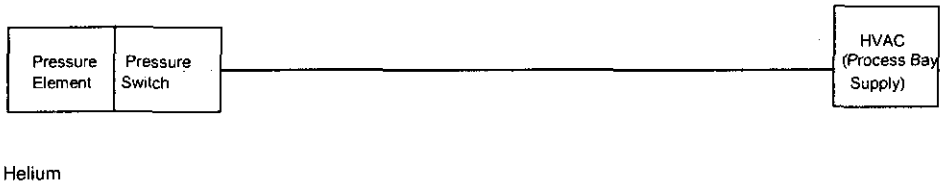

Figure 7.1 Dwyer Differential Pressure Switch Simplified Block Diagram

7.1 Pressure Transmitter (PDIS-8022,8042,8043)

The sensor chosen to monitor gauge pressure for the HVAC System differential pressure analytical limit is a Differential Pressure Instrument from Dwyer.

7.1.1 Instrument Data

Name: Differential Pressure Switch
Manufacturer: Dwyer Instrument Inc.
Model Number: Series 3000MR
Type: Differential Pressure Switch/Gage

7.1.2 Reference Specifications

(www.dwyer-inst.com/pressure/98-18p.html, 1998)

Range: 0 to 5 in H_2O
Resolution: 0.10
Accuracy: ±2% FS
Switch Repeatability: ±1%
Switch Deadband: <1% FS
Calibration Interval: 1 year between calibrations
Operating Temp: 20°F - 120°F

7.1.3 Project Specifications

Safety Classification: Safety Significant (SS)
Performance Category: PC-2
Environmental Qualification: Environmental Condition A
NPH Design Requirements: none
Required Safety Functions: Confinement

Dwyer Differential Pressure Switch

7.1.4 Calibration

A. Assumptions
   i.) Calibrations performed at ambient 72 ± 8 °F or 64 – 80 °F
   ii.) Min/max temperature range is 40 – 115 °F
   iii.) Calibration Interval = 1 year

B. Calculation Verification
   i.) Range
   URL = 5.0 in H_2O
   Zero = 0 in H_2O
   Span = 5.0 in H_2O
   CS = 5.0 in H_2O

   ii.) Turn Down Ratio
   TDR = URL/CS = 5.0/5.0 = 1.0

   iii.) Drift (Assume) ± 0.2%
   DR = ± 0.2% * (URL/CS) = ± 0.20% CS

   iv.) Relative Accuracy (RA)
   Assume: RA = $\pm (\text{Resolution}^2 + \text{Accuracy}^2 + \text{Repeat}^2 + \text{Deadband}^2)^{1/2} * \text{TDR}$
   $RA = \pm (0.1^2 + 2.0^2 + 1.0^2 + 1.0^2)^{1/2} = \pm 2.45$

   v.) Static Pressure (SP)
   SP = 0% CS

   vi.) Humidity Effect (HE)
   HE = 0% Calibrated Span

   vii.) Temperature Effect (TE)
   Given: TE = ± 1.0% per 50 °F ambient temperature change (Assume)
   T_{cal} = 72 ± 8 °F (calibration temperature range)
   T_{min} = 40 °F
   T_{max} = 115 °F
   Maximum Tdelta = T_{max} - T_{cal}(lowe) = 115°F - 64 °F = 51delta°F
   TE = ± 1.0% URL(TDR)

   viii.) Radiation Effect (RE)
   Given: ± 8.0% URL at 2.2×10^7 rads TID
   Given: Expected Dose Rate = 8.5mR/hr
   TID = 8.5 mR/hr * 43800 hr = 372,300 mR = 3.72×10^2 rads TID
   Approximate as zero because relatively small dose
   RE = ±0%CS

Dwyer Differential Pressure Switch

ix.) Power Supply Effect (PSE)
PSE = 0% CS

x.) Seismic Effect (SE)
No credit for this device is taken for a safety system shutdown during or after a seismic event
SE = 0%

xi.) Sensor Measurement and Test Equipment Effect (SMTE)

Test Equipment1 -Fluke 45, DC voltage mode with a 5 digit display
RA_{MTE1} = 0.025%Rdg + 2 digits = 0.025 + 0.02
= ±0.045%CS
RA_{STD1} = 0%CS
RD1 = 0%CS
SA1 = (0.025/10)*100 = 0.25%CS
$MTE1 = (RA_{MTE1}^2 + RA_{STD1}^2 + RD1^2 + SA1^2)^{1/2}$
$MTE1 = (0.045^2 + 0^2 + 0^2 + 0.25^2)^{1/2} = 0.254$
Test Equipment2, Heise PTE-1 with HQS-2 sensor (±0.50 in H_2O)
Accuracy = ±0.1% span
Repeatability = ±0.05% span
Temperature Effect = ±0.004% span per °F
= ±0.04% Note: HQS-2 Ref Temp is 70 °F
CS_{test} = ±0.5 inH_2O
CS_{inst} = ±0.5 inH_2O
$RA_{MTE2} = \pm(Acc^2 + Repeat^2 + TempEffect^2)^{1/2} * CS_{test}/CS_{inst}$ = ±0.12%CS
RA_{STD2} = ± 0.02%CS
RD2 = 0%CS (digital readout)
SA2 = 0%CS
$MTE2 = (RA_{MTE2}^2 + RA_{STD2}^2 + RD2^2 + SA2^2)^{1/2}$
$MTE2 = (0.12^2 + 0.02^2 + 0^2 + 0^2)^{1/2} = 0.122$
$SMTE = [MTE1^2 + MTE2^2]^{1/2} = [0.254^2 + 0.122^2]^{1/2} = 0.282$

xii.) Total Sensor Uncertainties

$e^+ = [RA^2 + DR^2 + SP^2 + TE^2 + HE^2 + RE^2 + PSE^2 + SE^2 + SMTE^2]^{1/2} + B$
$= [2.45^2 + 0.2^2 + 0 + 1.0^2 + 0 + 0 + 0^2 + 0 + 0.282^2]^{1/2} + 0 = 2.67\%CS$
$e^- = -[RA^2 + DR^2 + SP^2 + TE^2 + HE^2 + RE^2 + PSE^2 + SE^2 + SMTE^2]^{1/2} + B$
$= -[2.45^2 + 0.2^2 + 0 + 1.0^2 + 0 + 0 + 0^2 + 0 + 0.282^2]^{1/2} + 0 = -2.67\%CS$

e_{sens} = ±2.67%CS

e_{sens} = ±(0.0267)*0.5 in H_2O = ±0.013 in H_2O

Reotemp Pressure Indicator – Local Pressure

8 He Bottle Pressure Indicator

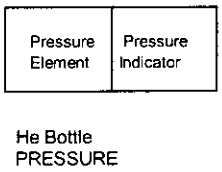

Figure 8.1 Reotemp Gauge Pressure Simplified Block Diagram

8.1 Gauge Pressure Indicator (PI-5*02, PT-5*21, PT-5*41, PT-5*61)

The sensor chosen to monitor pressure for the SC helium bottle pressure analytical limit is Gauge Pressure Indicators from Reotemp Instrument Corp.

8.1.1 Instrument Data

Name: Pressure Gauge
Manufacturer: Reotemp Instrument Corp
Model Number: PR-25-S-1-A-4-P33-D
Type: Local Pressure Gauge

8.1.2 Reference Specifications

Range: 0-5000 psig
Resolution: N/A
Accuracy: ±1.6% FS
Calibration Interval: 1 year between calibrations

8.1.3 Project Specifications

Safety Classification: Safety Class (SC)
Performance Category: PC-3
Environmental Qualification: Environmental Condition B
NPH Design Requirements: Seismic Condition A
Required Safety Functions: Pressure boundary integrity, Post Accident Monitoring

8.1.4 Calibration

A. Assumptions
   i.) Calibrations performed at ambient 72 ± 8 °F or 64 – 80 °F
   ii.) Min/max temperature range is 40 – 115 °F
   iii.) Calibration Interval = 1 year

Reotemp Pressure Indicator – Local Pressure

B. Calculation Verification

i.) Range
URL = 5000 psig
Zero = 0 psig
Span = 5000 psig
CS = 5000 psig

ii.) Turn Down Ratio
TDR = URL/CS = 5000/5000 = 1.0

iii.) Drift
Assume ± 1%
DR = ± 1% * (URL/CS) = ± 1% CS

iv.) Relative Accuracy (RA)
Given: RA = ± 1.6% CS

v.) Readability (Rd)
Graduation increments 100 psi – readability = 50 psi
Percent calibrated span = (50/5000)*100 = 1.0 % CS

vi.) Static Pressure (SP)
SP = 0% CS

vii.) Humidity Effect (HE)
HE = 0% Calibrated Span
Basis: 0 – 100 % relative humidity. (Housed in sealed enclosure)

viii.) Temperature Effect (TE)
Given: Operating Temperature -30 °F to 400 °F
Assume: TE = ± 0% URL

ix.) Radiation Effect (RE)
Given: ± 8.0% URL at 2.2×10^7 rads TID
Given: Expected Dose Rate = 8.5mR/hr
TID = 8.5 mR/hr * 43800 hr = 372,300 mR = 3.72×10^2 rads TID
Approximate as zero because relatively small dose
RE = ±0%CS

x.) Power Supply Effect (PSE)
PSE > 0% CS

Reotemp Pressure Indicator – Local Pressure

xi.) Seismic Effect (SE)
No credit for this device is taken for a safety system shutdown during or after a seismic event
SE = 0%

xii.) Sensor Measurement and Test Equipment Effect (SMTE)

Test Equipment1, Heise PTE-1 with HQS-2 sensor (0-5000psig)
Accuracy = ±0.1% span
Repeatability = ±0.02% span
Temperature Effect = ±0.004% span per °F Note: HQS-2 Ref temp is 70 °F
±0.004%*(80-70) = ±0.04%
CS_{test} = 5000 psig
CS_{inst} = 5000 psig

$RA_{MTE1} = \pm(Acc^2 + Repeat^2 + TempEffect^2)^{1/2} * CS_{test}/CS_{inst} = \pm 0.11\%CS$
$RA_{STD1} = \pm\ 0.02\%CS$
RD1 = 0%CS (digital readout)
SA1 = 0%CS
$MTE1 = (RA_{MTE1}^2 + RA_{STD1}^2 + RD1^2 + SA1^2)^{1/2}$
$MTE1 = (0.11^2 + 0.02^2 + 0^2 + 0^2)^{1/2} = 0.111$

SMTE = 0.111

xiii.) Total Sensor Uncertainties

$e^+ = [RA^2 + Rd^2 + DR^2 + SP^2 + TE^2 + HE^2 + RE^2 + PSE^2 + SE^2 + SMTE^2]^{1/2} + B$
$= [1.6^2 + 1.0 + 1.0^2 + 0 + 0^2 + 0 + 0 + 0^2 + 0 + 0.111^2]^{1/2} + 0 = 2.14\%CS$
$e^- = -[RA^2 + Rd^2 + DR^2 + SP^2 + TE^2 + HE^2 + RE^2 + PSE^2 + SE^2 + SMTE^2]^{1/2} + B$
$= -[1.6^2 + 1.0^2 + 1.0^2 + 0 + 0^2 + 0 + 0 + 0^2 + 0 + 0.113^2]^{1/2} + 0 = -2.14\%CS$

$e_{sens} = \pm 2.14\%CS$
$e_{sens} = \pm(0.0214)*5000$ psig
$e_{sens} = \pm 107$ psig (Note: rounded value to 110 psig.)

W.E. Anderson (Dwyer) Flow Switch

9 Flow Switch

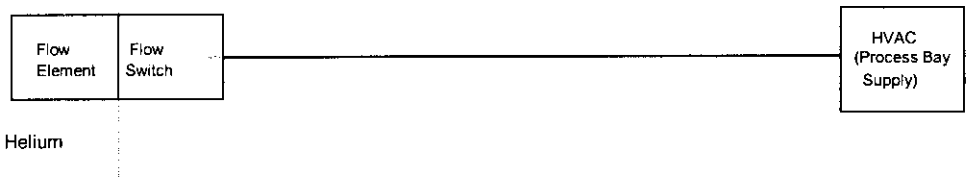

Figure 9.1 W.E. Anderson (Dwyer) Vane Operated Flow Switch Simplified Block Diagram

9.1 Flow Switch (FS-8*52)

The sensor chosen to monitor flow and operate flow switches for the HVAC System is a Vane Operated Flow Switch from W.E Anderson (Dwyer).

9.1.1 Instrument Data

Name: Series V4 Flotect Vane Operated Flow Switch
Manufacturer: Dwyer Instrument Inc.
Model Number: V4-SS
Type: Flow Switch

9.1.2 Reference Specifications

(www.dwyer-inst.com/flow/98-22f.html, 1998)

Range: N/A
Accuracy: ±10% FS
Calibration Interval: 1 year between calibrations
Operating Temp: up to 275°F

9.1.3 Calibration

A. Assumptions
   i.) Calibrations performed at ambient 72 ± 8 °F or 64 – 80 °F
   ii.) Min/max temperature range is 40 – 115 °F
   iii.) Calibration Interval = 1 year

B. Calculation Verification
   i.) Range = N/A
       CS = N/A

   ii.) Turn Down Ratio
       TDR = URL/CS = 1.0

   iii.) Drift
       DR = ± 0%

W.E. Anderson (Dwyer) Flow Switch

iv.) Relative Accuracy (RA)
RA = ± 10%

v.) Static Pressure (SP)
SP = 0% CS

vi.) Humidity Effect (HE)
HE = 0% Calibrated Span

vii.) Temperature Effect (TE)
Assume: TE = ± 0% per °F over expected range

viii.) Radiation Effect (RE)
Given: ± 8.0% URL at 2.2×10^7 rads TID
Given: Expected Dose Rate = 8.5mR/hr
TID = 8.5 mR/hr * 43800 hr = 372,300 mR = 3.72×10^2 rads TID
Approximate as zero because relatively small dose
RE = ±0%CS

ix.) Power Supply Effect (PSE)
PSE = 0% CS

x.) Seismic Effect (SE)
No credit for this device is taken for a safety system shutdown during or after a seismic event
SE = 0%

xi.) Sensor Measurement and Test Equipment Effect (SMTE)

Test Equipment1 –Calibration laboratory instrumentation
Accuracy = 1% Rdg (NIST Traceable)
Parameter Limit = 1000 scfm
Calibrated Span = 1200 scfm
SMTE = ±1% CS (assume)

xii.) Total Sensor Uncertainties

$$e^+ = [RA^2 + DR^2 + SP^2 + TE^2 + HE^2 + RE^2 + PSE^2 + SE^2 + SMTE^2]^{1/2} + B$$
$$= [10^2 + 0^2 + 0 + 0^2 + 0 + 0 + 0^2 + 0 + 1^2]^{1/2} + 0 = 10\%CS$$
$$e^- = -[RA^2 + DR^2 + SP^2 + TE^2 + HE^2 + RE^2 + PSE^2 + SE^2 + SMTE^2]^{1/2} + B$$
$$= -[10^2 + 0^2 + 0 + 0^2 + 0 + 0 + 0^2 + 0 + 1^2]^{1/2} + 0 = 10\%CS$$

$e_{sens} = \pm 10\%CS$

$e_{sens} = \pm(0.10)*1200$ scfm $= \pm 120$ scfm

W.E. Anderson (Dwyer) Flow Switch

10 References

10.1 Vender Information

1. Bulletin 400-10/96, 1996 - MKS Instruments, Inc.)
2. letter from R. Traverso MKS Applications Engineer 1/26/98
3. 1960501R 5/96 - Framatome Technologies
4. PDS 4302 April 1992 - Rosemount Nuclear
5. SW/PI-62 4/3/95 - Ashcroft
6. SW-12 – Ashcroft
7. letter 11/10/97 from H. Sittinger App Engineer FCI
8. Qualification Report #708349, 8/20/84 – FCI Fluid Components, Inc.)
9. Specification 12/95 – Terra Technology Corp.
10. www.dwyer-inst.com/pressure/98-18p.html, 1998
11. www.dwyer-inst.com/flow/98-22f.html, 1998

10.2 HANFORD

1. SNF-3091, 1999, *Cold Vacuum Drying Safety Class Instrumentation and Control System Design Description*, Rev. 1, Fluor Hanford, Inc., Richland, Washington.
2. HNF-1851, *Cold Vacuum Drying Residual Free Water Test Description,* Fluor Hanford, Inc., Richland, Washington.
3. HNF-SD-SNF-DRD-002, Rev.4, *Cold Vacuum Drying Facility Design Requirements,* Fluor Hanford, Inc., Richland, Washington.