ENGINEERING CHANGE NOTICE

Page 1 of 2

1. ECN 654143

Proj. ECN

2. ECN Category (mark one)	3. Originator's Name, Organization, MSIN, and Telephone No.	4. USQ Required?	5. Date
Supplemental ○	B. R. Johns, ISE, S7-24, 373-3429	◉ Yes ○ No	06/25/99
Direct Revision ◉			
Change ECN ○			
Temporary ○			
Standby ○			
Supersedure ○			
Cancel/Void ○			

6. Project Title/No./Work Order No.	7. Bldg./Sys./Fac. No.	8. Approval Designator
Interim Stabilization, Leak Detector Dedication, 103361	241-G/200-GEN	SQ

9. Document Numbers Changed by this ECN (includes sheet no. and rev.)	10. Related ECN No(s).	11. Related PO No.
HNF-4275 rev 0 (JKB 8/11/99)	N/A	N/A

12a. Modification Work	12b. Work Package No.	12c. Modification Work Completed	12d. Restored to Original Condition (Temp. or Standby ECNs only)
○ Yes (fill out Blk. 12b) ◉ No (NA Blks. 12b, 12c, 12d)	N/A	N/A Design Authority/Cog. Engineer Signature & Date	N/A Design Authority/Cog. Engineer Signature & Date

13a. Description of Change — 13b. Design Baseline Document? ◉ Yes ○ No

This ECN is a direct revision of document HNF-4275, Commercial Grade Item Dedication for Leak Detection Relays. The revision changes step 6.2.27 to identify the contacts as "closed" becasuse the 5300 relay is deenergized if the selector switch is in the "fail" position.

The original step 6.2.41 is deleted and the origninal step 6.2.42 is renumbered as 6.2.41. Step 6.2.41 required a green tag on the leak detector relay after testing. Steps 6.2.3 through 6.2.40 are completed after the relays are installed on the PIC skid, therefore a separate green tag is not needed on the relay.

14a. Justification (mark one)	14b. Justification Details
Criteria Change ○	This direct revision of HNF-4275 corrects two steps in testing of the leak detector relays for dedication purposes. Design verification by Inform review per HNF-IP-0842, volume IV, section 4.24. USQ tracking #TF-99-0105, revision 0. This direct revision will not change collective dose since it has no impact on radiological sources, contamination control or shielding. A NEPA review is not required since this is an administrative change per HNF-PRO-452, section 2.1, paragraph 10.
Design Improvement ○	
Environmental ○	
Facility Deactivation ○	
As-Found ○	
Facilitate Const. ○	
Const. Error/Omission ○	
Design Error/Omission ◉	

15. Distribution (include name, MSIN, and no. of copies)

O. M. Jaka	S7-34
B. R. Johns	S7-24
M. R. Koch	S7-24
J. E. Lamphere	S7-24
T. J. Volkman	S7-34
W. F. Zuroff	S7-24

RELEASE STAMP

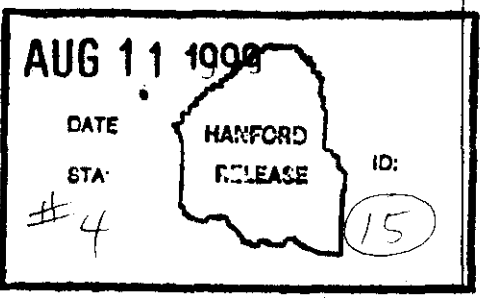

ENGINEERING CHANGE NOTICE

1. ECN (use no. from pg. 1): 654143

16. Design Verification Required	17. Cost Impact		18. Schedule Impact (days)
	ENGINEERING	CONSTRUCTION	
(●) Yes	Additional ○ $ N/A	Additional ○ $ N/A	Improvement ○ N/A
○ No	Savings ○ $ N/A	Savings ○ $ N/A	Delay ○ N/A

19. Change Impact Review: Indicate the related documents (other than the engineering documents identified on Side 1) that will be affected by the change described in Block 13. Enter the affected document number in Block 20.

SDD/DD	☐	Seismic/Stress Analysis	☐	Tank Calibration Manual	☐
Functional Design Criteria	☐	Stress/Design Report	☐	Health Physics Procedure	☐
Operating Specification	☐	Interface Control Drawing	☐	Spares Multiple Unit Listing	☐
Criticality Specification	☐	Calibration Procedure	☐	Test Procedures/Specification	☐
Conceptual Design Report	☐	Installation Procedure	☐	Component Index	☐
Equipment Spec.	☐	Maintenance Procedure	☐	ASME Coded Item	☐
Const. Spec.	☐	Engineering Procedure	☐	Human Factor Consideration	☐
Procurement Spec.	☐	Operating Instruction	☐	Computer Software	☐
Vendor Information	☐	Operating Procedure	☐	Electric Circuit Schedule	☐
OM Manual	☐	Operational Safety Requirement	☐	ICRS Procedure	☐
FSAR/SAR	☐	IEFD Drawing	☐	Process Control Manual/Plan	☐
Safety Equipment List	☐	Cell Arrangement Drawing	☐	Process Flow Chart	☐
Radiation Work Permit	☐	Essential Material Specification	☐	Purchase Requisition	☐
Environmental Impact Statement	☐	Fac. Proc. Samp. Schedule	☐	Tickler File	☐
Environmental Report	☐	Inspection Plan	☐	NONE	☒
Environmental Permit	☐	Inventory Adjustment Request	☐		☐

20. Other Affected Documents: (NOTE: Documents listed below will not be revised by this ECN.) Signatures below indicate that the signing organization has been notified of other affected documents listed below.

Document Number/Revision	Document Number/Revision	Document Number/Revision
N/A	N/A	N/A

21. Approvals

	Signature	Date		Signature	Date
Design Authority	WF ZUROFF [signature]	8/9/99	Design Agent	BR JOHNS [signature]	7/7/99
Cog. Eng.	for JE LAMPHERE [signature]	7/19/99	PE		
Cog. Mgr.	MR KOCH [signature]	7/22/99	QA		
QA	TJ VOLKMAN [signature]	8/4/99	Safety		
Safety	~~OM JAKA~~ J.A. Ronschau [signature]	7/29/99	Design		
Environ.	N/A		Environ.		
Other	Informal Review: TNG [signature]	7/15/99	Other		

DEPARTMENT OF ENERGY

Signature or a Control Number that tracks the Approval Signature

ADDITIONAL

COMMERCIAL GRADE ITEM DEDICATION FOR LEAK DETECTION RELAYS

B. R. JOHNS
LOCKHEED MARTIN HANFORD CORPORATION
Richland, WA 99352
U.S. Department of Energy Contract DE-AC06-96RL13200

EDT/ECN: 654143 UC:
Org Code: 74D00 Charge Code: 103361
B&R Code: EW3120071 Total Pages: 15

Key Words: PICS, SALT WELL, SKID, INTERIM STABILIZATION, LEAK DETECTION

Abstract: This Test Plan provides a test method to dedicate the leak detection relays used on the new Pumping and Instrumentation Control (PIC) skids. The new skids are fabricated on-site. The leak detection system is a safety class system per the Authorization Basis.

TRADEMARK DISCLAIMER. Reference herein to any specific commercial product, process, or service by trade name, trademark, manufacturer, or otherwise, does not necessarily constitute or imply its endorsement, recommendation, or favoring by the United States Government or any agency thereof or its contractors or subcontractors.

Printed in the United States of America. To obtain copies of this document, contact: Document Control Services, P.O. Box 950, Mailstop H6-08, Richland WA 99352, Phone (509) 372-2420; Fax (509) 376-4989.

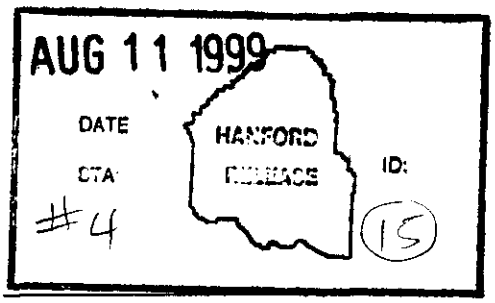

8/10/99

Release Approval Date Release Stamp

Approved For Public Release

RECORD OF REVISION

(1) Document Number: HNF-4275

(2) Title: COMMERCIAL GRADE ITEM DEDICATION FOR LEAK DETECTION RELAYS

Change Control Record

(3) Revision	(4) Description of Change - Replace, Add, and Delete Pages	Authorized for Release	
		(5) Cog. Engr.	(6) Cog. Mgr. Date
0	(7) EDT 623367, (ORIGINAL)	JE.LAMPHERE	M.R.KOCH 5/5/99
1 RS	ECN 654143, Direct revision. Corrected step 6.2.27 and deleted step 6.2.41.	BRJohnson 7/19/99	MRKoch 7/22/99

TABLE OF CONTENTS

1. INTRODUCTION 2
2. OBJECTIVE 2
3. SCOPE 2
4. DESCRIPTION OF TEST 2
4.1. TEST ITEM 2
4.2. TEST ENVIRONMENT 2
4.3. EQUIPMENT AND FACILITIES 3
4.4. DATA 3
4.5. CRITERIA AND CONSTRAINTS 3
5. EXPECTED RESULTS 3
6. TEST PROCEDURE 3
6.1. BENCH TEST 3
6.2. FUNCTIONAL TEST 5
9. SAFETY 7
8. QUALITY ASSURANCE 7
9. ORGANIZATION AND FUNCTION RESPONSIBILITIES 8
10. SCHEDULE 8
11. REPORTS 8
12. REFERENCES 8
13. DATA SHEETS 8
APPENDIX 9

COMMERCIAL GRADE ITEM UPGRADE DEDICATION FOR LEAK DETECTION RELAYS

1. INTRODUCTION

This commercial grade item upgrade dedication test is for the leak detection relays installed on the Pumping and Instrumentation Control (PIC) skids. The PIC skids are used by Interim Stabilization for pumping liquids out of the underground waste tanks. There are two sets of leak detection relay assemblies on each PIC skid. The primary leak detection relay assembly is to monitor the pump pit of the tank being pumped. The second leak detection relay assembly monitors other areas along the transfer line during pumping such as Clean Out Boxes (COB). The leak detection relay assembly is considered Safety Class per the Authorization Basis, chapter 5, table 5.3.2.18-3.

2. OBJECTIVE

The testing outlined in this test procedure will dedicate the two relays used in each leak detector assembly on the PIC skids. These relays are intrinsically safe type relays.

3. SCOPE

This test covers the 5300-S-V-OC and the 2313A relays used in leak detection assemblies. Upon successful completion and passing of the testing outlined in this procedure, the relays are considered dedicated and can be green tagged and installed in the leak detection units.

4. DESCRIPTION OF TEST

4.1. TEST ITEM

The items to be tested are the relays in the leak detection assembly. These leak detection assemblies contain B/W Controls relay part number 5300-S-V-OC and MTL relay part number 2313A.

4.2. TEST ENVIRONMENT

The bench test will be performed in the shop and the functional test will be performed during the Acceptance Test Procedure (ATP) or Operational Test Procedure (OTP) of the leak detection assembly.

4.3. EQUIPMENT AND FACILITIES

Test equipment required is listed below. Calibration is required for the digital voltmeter.

- Digital voltmeter for voltage checks
- Test box to check the B/W Controls relay (Coordinate use with Interim Stabilization maintenance.)
- Bucket of water to test leak detector probe.
- Leak detector probe (Coordinate with Interim Stabilization for probe to use for testing).
- DC power supply for 3.5vdc to 4.0vdc for testing relay.
- A nominal 120vac power source to connect to the leak detection assembly.

4.4. DATA

The test procedure section and data tables identify the parameters to be checked and the acceptable values. The data is primarily voltages and relay contact opening and closing.

4.5. CRITERIA AND CONSTRAINTS

The criteria for acceptance of the relays is based upon proper functioning of the relays during the testing. The relays must function 100% correct to be acceptable. There are no other controlling documents the relays must comply with to be acceptable.

5. EXPECTED RESULTS

The relays must function 100% correct which includes all contacts operations and voltage measurements to meet the acceptance criteria as listed on the data sheets.

6. TEST PROCEDURE

6.1. BENCH TEST

6.1.1. Bench test the Intrinsically Safe 5300-S-V-OC (5300) relay as per the following steps:

6.1.2. Use a calibrated digital voltmeter. Record calibration data on data sheet.

6.1.3. Identify the relays to be tested with a label. Label one as "SALW-LDE-6001*" and the other as "SALW-LDE-6002*". Document the number in the component ID column of the attached tables, one on each table. Replace the * with the skid identification letter.

6.1.4. Quality Control to verify the correct part number of 5300-S-V-OC of the relay that is being tested. Record on the attached table.

6.1.5. Connect the 5300 relay to the test box as shown in the attached sketch 1. Ensure there is no power to the test box when the wires are being connected.

6.1.6. Energize the test box and energize the 5300 relay by closing switch 1 on the test box.

6.1.7. Verify the output voltage at terminals 14 and 15 on the 5300 is between 9 and 11 vdc. Record voltage on attached table.

6.1.8. Verify the current load on the test box is between 6 to 10 amperes. Record on the attached table.

6.1.9. Verify the "relay OFF" light is ON.

6.1.10. Verify the "relay ON" light is OFF.

6.1.11. Verify the voltage between terminals 5 and 8 on the 5300 relay is 0vac +/- 1vac.

6.1.12. Verify the voltage between terminals 6 and 7 on the 5300 relay is 120vac +5vac/-10vac.

6.1.13. Close switch SW2.

6.1.14. Verify the "relay OFF" light is OFF.

6.1.15. Verify the "relay ON" light is ON.

6.1.16. Verify the voltage between terminals 5 and 8 on the 5300 relay is 120 vac +5vac/_10vac.

6.1.17. Verify the voltage between terminals 6 and 7 on the 5300 relay is 0vac +/- 1vac.

6.1.18. Open switch SW2.

6.1.19. Verify the "relay OFF" light is ON.

6.1.20. Verify the "relay ON" light is OFF.

6.1.21. Verify the voltage between terminals 5 and 8 on the 5300 relay is 0vac +/- 1vac.

6.1.22. Verify the voltage between terminals 6 and 7 on the 5300 relay is 120vac +5vac/-10vac.

6.1.23. Repeat steps 6.1.13 through 6.1.22 a total of 5 times. Pause before performing each switch SW2 operation. Record results on the attached table.

6.1.24. The 5300 relay passes the contact test if the results of all 5 tests are satisfactory. Any failure during any of the 5 tests is considered a failure of the relay.

6.1.25. Quality Control is to sign the attached table and green tag the 5300 relay as acceptable for installation.

6.1.26. Repeat steps 6.1.4 through 6.1.25 for each relay.

6.2. FUNCTIONAL TEST

6.2.1. Perform the functional test after the leak detector relays (5300-S-V-OC and 2313A) are installed and the skid is assembled to the point where 120vac control power can be applied to the leak detector assembly. Test each of the two leak detector sets separately.

6.2.2. Record the calibration of the digital multimeter on data sheet.

6.2.3. Quality Control to verify part number of MTL relay as "2313A" and record on data table.

6.2.4. Apply 120vac power to the leak detector assembly either from the skid distribution panel or form a 120vac power source to the line side of the leak detector fuse block.

6.2.5. Disconnect the wires from terminals 1 and 4 of the MTL 2313A relay.

6.2.6. Apply 3.5 to 4.0 vdc power to the MTL 2313A terminals where positive dc goes to terminal 1 and negative dc goes to terminal 4.

6.2.7. Adjust the MTL 2313A relay to activate (where the red light on the relay is OFF) at 3.5 to 4.0 vdc. Record on the data table.

6.2.8. Disconnect the dc power supply from the MTL 2313A relay.

6.2.9. Reconnect the wires disconnected in step 6.2.5 to the MTL 2313A relay.

6.2.10. Place the selector switch on the front of the panel from the leak detector relays to be tested in the "PROBE TEST" position.

6.2.11. Adjust the 5300 sensitivity unit the MTL relay activates (that is the red light OFF). Then add 0.25 to the 5300 sensitivity setting to ensure a margin for activation. Record on data sheet.

6.2.12. Release the selector switch on the front of the panel.

6.2.13. Verify the voltage across terminals 14 and 15 of the 5300 relay and terminals 1 and 4 of the MTL 2313A relay is 9 to 11 vdc.

6.2.14. Remove the 120vac power from the leak detector assembly.

6.2.15. Connect a leak detector probe to the leak detector terminal block as shown in the attached sketch 2.

6.2.16. Return 120vac power to the leak detector assembly.

6.2.17. Place the selector switch on the front of the panel to the "OPERATE" position for the leak detector assembly to be tested.

6.2.18. Verify the contacts between terminals 4 and 5 are CLOSED on the 5300 relay.

6.2.19. Verify the contacts between terminals 9 and 10 are OPENED, the contacts between terminals 13 and 14 are CLOSED and the red light is ON at the MTL 2313A relay.

6.2.20. Place the selector switch to the "TEST PROBE" position.

6.2.21. Verify the contacts between terminals 4 and 5 are OPENED on the 5300 relay.

6.2.22. Verify the contacts between terminals 9 and 10 are CLOSED, the contacts between terminals 13 and 14 are OPENED and the red light is OFF at the MTL 2313A relay.

6.2.23. Return the selector switch to the "OPERATE" position.

6.2.24. Verify the contacts between terminals 4 and 5 are CLOSED on the 5300 relay.

6.2.25. Verify the contacts between terminals 9 and 10 are OPENED, the contacts between terminals 13 and 14 are CLOSED and the red light is ON at the MTL 2313A relay.

6.2.26. Place the selector switch to the "FAIL" position.

6.2.27. Verify the contacts between terminals 4 and 5 are CLOSED on the 5300 relay.

6.2.28. Verify the contacts between terminals 9 and 10 are CLOSED, the contacts between terminals 13 and 14 are OPENED and the red light is OFF at the MTL 2313A relay.

6.2.29. Return the selector switch to the "OPERATE" position.

6.2.30. Verify the contacts between terminals 4 and 5 are CLOSED on the 5300 relay.

6.2.31. Verify the contacts between terminals 9 and 10 are OPENED, the contacts between terminals 13 and 14 are CLOSED and the red light is ON at the MTL 2313A relay.

6.2.32. Place the leak detector probe into a bucket of water.

6.2.33. Verify the contacts between terminals 4 and 5 are OPENED on the 5300 relay.

6.2.34. Verify the contacts between terminals 9 and 10 are CLOSED, the contacts between terminals 13 and 14 are OPENED and the red light is OFF at the MTL 2313A relay.

6.2.35. Remove the leak detector from the bucket of water.

6.2.36. Verify the contacts between terminals 4 and 5 are CLOSED on the 5300 relay.

6.2.37. Verify the contacts between terminals 9 and 10 are OPENED, the contacts between terminals 13 and 14 are CLOSED and the red light is ON at the MTL 2313A relay.

6.2.38. Remove the power from the leak detector assembly being tested.

6.2.39. Disconnect the leak detector probe from the relay set being tested.

6.2.40. Quality Control to sign the data table upon successful completion of the functional tests.

6.2.41. Repeat steps 6.2.3 through 6.2.40 for the other leak detector relay set.

9. SAFETY

This test procedure creates no unique safety hazard. Standard electrical practices are to be used for performing voltage checks on low voltage equipment. Voltages encountered in this test are 5 volts dc and 120 volts ac.

8. QUALITY ASSURANCE

Quality Control shall witness the performance of this test procedure. Quality Control shall be responsible to sign the completed data sheets along with engineering and green tag those relays that successfully complete the testing.

9. ORGANIZATION AND FUNCTION RESPONSIBILITIES

Lockheed Martin Hanford Corporation shall provide the engineering support to ensure the proper test procedure is prepared and the Commercial Grade Item (CGI) dedication forms are completed prior to use of the leak detection relays.

Site Fabrication Services shall perform this test procedure for leak detection relays used in the fabrication of new PIC skids.

10. SCHEDULE

The bench test shall be performed prior to the relays being installed in the PIC skids. The functional test shall be performed during the ATP of the PIC skids that are fabricated.

11. REPORTS

The CGI forms and attached data sheets shall be the official test record. A formal test report will not be issued.

12. REFERENCES

HNF-SD-WM-BIO-001, REVISION 1-C, *TANK WASTE REMEDIATION SYSTEM BASIS FOR INTERIM OPERATION,* March 1999.

HNF-IP-0842, VOLUME IV, SECTION 3.11, REVISION 1, *COMMERCIAL GRADE ITEM UPGRADE,* March 1998.

13. DATA SHEETS

Typical data sheets are in the appendix. A completed copy of each data sheet shall be part of the completed CGI form.

APPENDIX

TEST DATA SHEETS

1. BENCH TEST DATA SHEET
2. FUNCTIONAL TEST DATA SHEET

6.1.2 Voltmeter Standards # _____
Voltmeter Calibration Due Date: _____

5300-S-V-OC RELAY TEST DATA TABLE

STEP	RECORDED DATA	EXPECTED DATA	ACCEPT/UNACCEPT
6.1. 3		SALW-LDE-6001* OR SALW-LDE-6002*	
6.1.4		5300-S-V-OC	
6.1.7		9 TO 11 VDC	
6.1.8		6 TO 10 AMPERES	
6.1.9		"RELAY OFF" light ON	
6.1.10		"RELAY ON" light OFF	
6.1.11		0vac +/- 1vac	
6.1.12		120vac + 5vac/-10vac	

STEP	ACTUAL DATA(RECORD 1ST SET OF DATA)	EXPECTED DATA	TEST SERIES [ACCEPT (A)/UNACCEPT (U)]				
			1	2	3	4	5
6.1.14		"RELAY OFF" light OFF					
6.1.15		"RELAY ON" light ON					
6.1.16		120VAC +5VAC/-10VAC					
6.1.17		0VAC +/- 1VAC					
6.1.19		"RELAY OFF" light ON					
6.1.20		"RELAY ON" light OFF					
6.1.21		0VAC +/- 1VAC					
6.1.22		120VAC +5VAC/-10VAC					

Relay (PASS/FAIL) _____ (ALL TESTS MUST BE ACCEPTABLE)

_____
Quality Control Inspector Date

_____
Cognizant Engineer Date

5300-S-V-OC AND MTL 2313A FUNCTIONAL TESTS

RELAY NUMBER: SALW-LDE-_____
6.2.2 Voltmeter Standards # _____
Voltmeter Calibration Due Date: _____
6.2.3 MTL 2313A part number verified correct: (YES/NO)_____
Step 6.2.7: MTL 2313A relay adjusted to actuate between 3.5 and 4.0 vdc. (YES/NO)_____
Step 6.2.11: B/W relay sensitivity adjusted (+0.25) to actuate the MTL 2313A relay. (YES/NO)_____

STEP	SWITCH POSITION	5300-S-V-OC			MTL 2313A						
		TERMINALS 4 & 5			TERMINALS 9 & 10			TERMINALS 13 & 14			
		STEP	ACTUAL	EXPECTED	STEP	ACTUAL	EXPECTED	ACTUAL	EXPECTED	LIGHT	
6.2.17	OPERATE	6.2.18		CLOSED	6.2.19		OPENED		CLOSED		ON
6.2.20	TEST PROBE	6.2.21		OPENED	6.2.22		CLOSED		OPENED		OFF
6.2.23	OPERATE	6.2.24		CLOSED	6.2.25		OPENED		CLOSED		ON
6.2.26	FAIL	6.2.27		CLOSED	6.2.28		CLOSED		OPENED		OFF
6.2.29	OPERATE	6.2.30		CLOSED	6.2.31		OPENED		CLOSED		ON
6.2.32	OPERATE/IN WATER	6.2.33		OPENED	6.2.34		CLOSED		OPENED		OFF
6.2.34	OPERATE/OUT OF WATER	6.2.35		CLOSED	6.2.36		OPENED		CLOSED		ON

Functional test (PASS/FAIL) _____(ALL EXPECTED DATA MUST BE ACHIEVED)

_____
Quality Control Inspector Date

_____
Cognizant Engineer Date

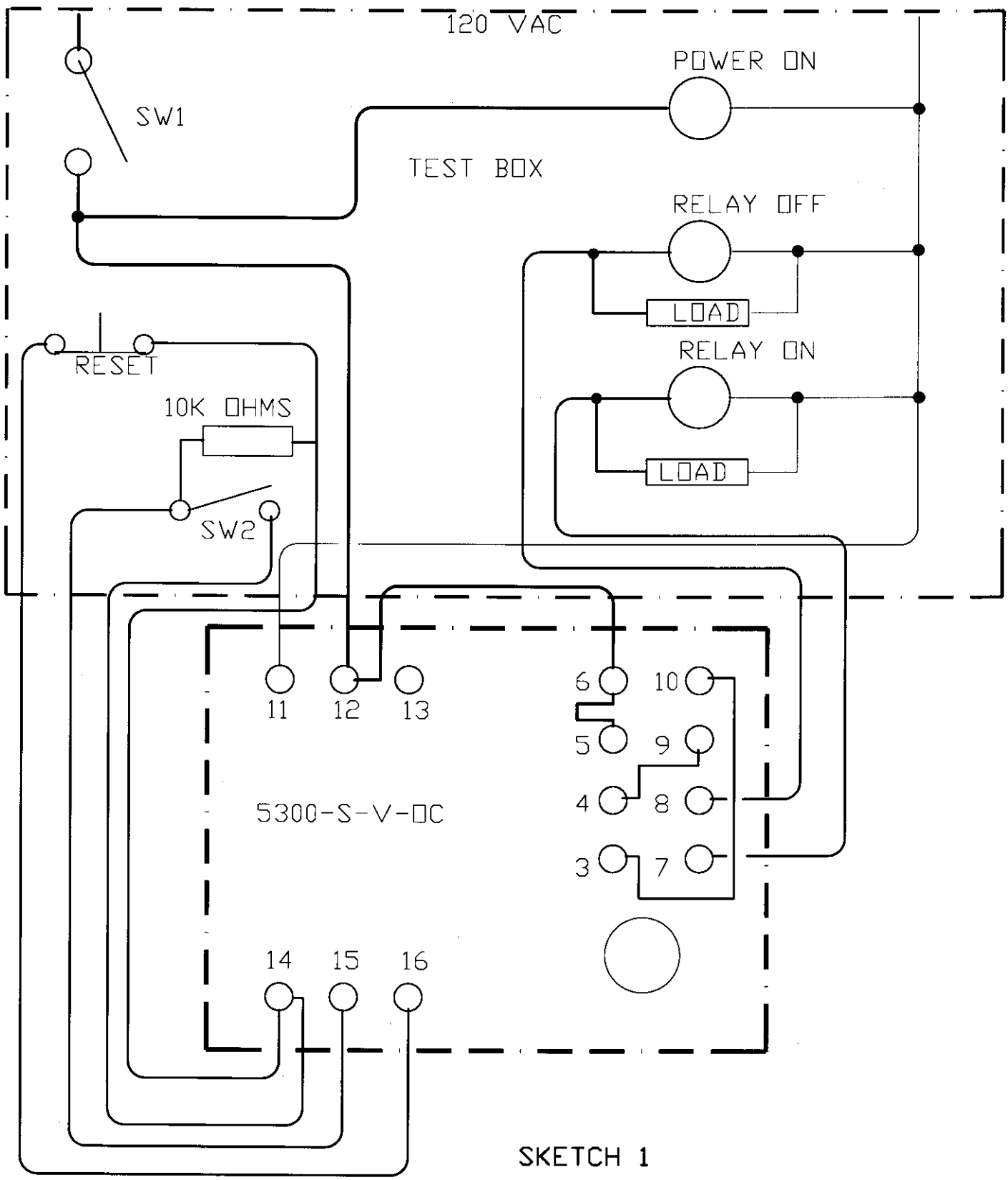

SKETCH 1
RELAY CONTACT TEST SETUP

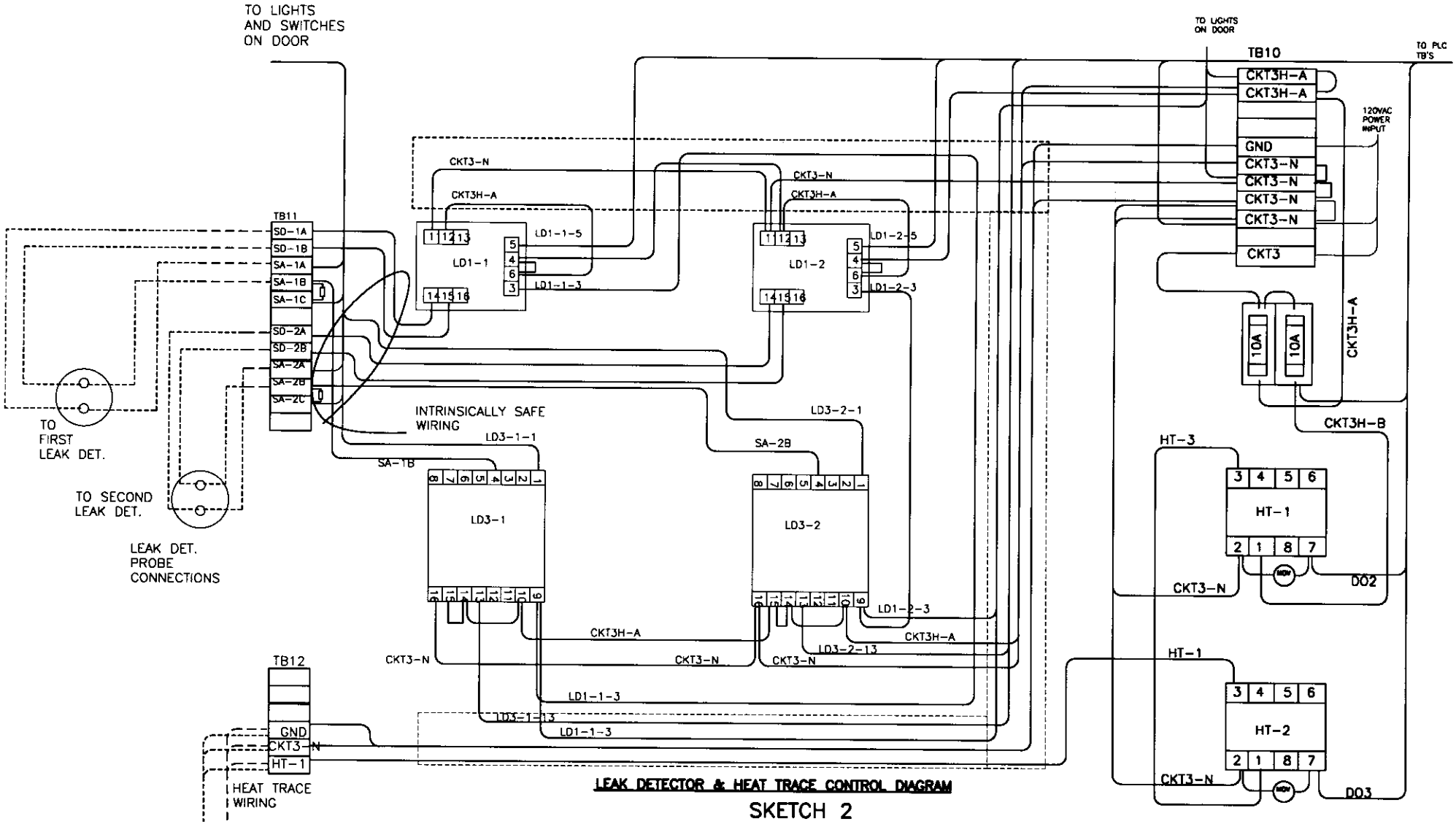

LEAK DETECTOR & HEAT TRACE CONTROL DIAGRAM

SKETCH 2