INNOVATIVE TECHNOLOGY
Summary Report

DOE/EM-0622

# Russian Pulsating Mixer Pump

Tanks Focus Area

*Prepared for*
U.S. Department of Energy
Office of Environmental Management
Office of Science and Technology

March 2002

INNOVATIVE TECHNOLOGY
Summary Report

# Russian Pulsating Mixer Pump

Tech ID 2370

Tanks Focus Area

*Deployed at*
Oak Ridge National Laboratory
Oak Ridge, Tennessee

INNOVATIVE TECHNOLOGY
Summary Report

## *Purpose of this document*

Innovative Technology Summary Reports are designed to provide potential users with the information they need to quickly determine whether a technology would apply to a particular environmental management problem. They are also designed for readers who may recommend that a technology be considered by prospective users.

Each report describes a technology, system, or process that has been developed and tested with funding from the Department of Energy's Office of Science and Technology. A report presents the full range of problems that a technology, system, or process will address and its advantages to the Department of Energy's cleanup in terms of system performance, cost, and cleanup effectiveness. Most reports include comparisons to baseline technologies as well as other competing technologies. Information about commercial availability and technology readiness for implementation is also included. Innovative Technology Summary Reports are intended to provide summary information. References for more detailed information are provided in an appendix.

Efforts have been made to provide key data describing the performance, cost, and regulatory acceptance of the technology. If this information was not available at the time of publication, the omission is noted.

All published Innovative Technology Summary Reports are available on the Office of Science and Technology Web site at www.em.doe.gov/ost under "Publications."

# TABLE OF CONTENTS

1. SUMMARY page 1
2. TECHNOLOGY DESCRIPTION page 5
3. PERFORMANCE page 9
4. TECHNOLOGY APPLICABILITY AND ALTERNATIVES page 13
5. COST page 15
6. OCCUPATIONAL SAFETY AND HEALTH page 17
7. REGULATORY AND POLICY ISSUES page 19
8. LESSONS LEARNED page 21

**APPENDICES**

A. REFERENCES page 23
B. ACRONYMS page 25

# SECTION 1
# SUMMARY

## Technology Summary

The U.S. Department of Energy deployed a Russian pulsating mixer pump—a reciprocating, air-operated mixer—in January 2001 at the Oak Ridge Reservation. The Russian mixer was deployed in tank TH-4 to mobilize a 2.5-foot layer of sludge. The Russian mixer mobilized the sludge with existing tank liquid to create slurry. The slurry was pumped out of tank TH-4 with an air-powered, double-diaphragm pump. This retrieval action left a residual waste heel only 4 inches deep near the outside wall of the tank. Additional material could have been removed by utilizing additional recycle/mixing/pump-out cycles, but the Department of Energy and state regulators agreed that the residual waste volume met the minimal closure criteria.

**How It Works**

The Russian pulsating mixer pump operates by drawing liquid waste into a vertical cylindrical pressure vessel through the perforated strainer (screened intake) and then expelling it forcefully through the discharge manifold (see Figures 1 and 2). The discharge manifold directs waste through an array of four jet nozzles near the bottom of the waste tank to mobilize tank contents and scour the tank floor. The force from the jet nozzles breaks up settled sludge more effectively than mixers designed to recirculate liquid. With a compressed-air supply pressure of 90 pounds per square inch (psi), the pressure vessel takes about 35 seconds to fill and only 7 seconds to empty. This cycle is continuously repeated to create a pulsating mixing action. The entire mixer assembly rotates at prescribed rotation rates through a 90-degree arc on a swivel mounted on a platform-supported tank riser interface. The swivel enables the four fixed nozzles to complete a sweeping circular pattern on the floor of the tank (Hatchell et al. 2001).

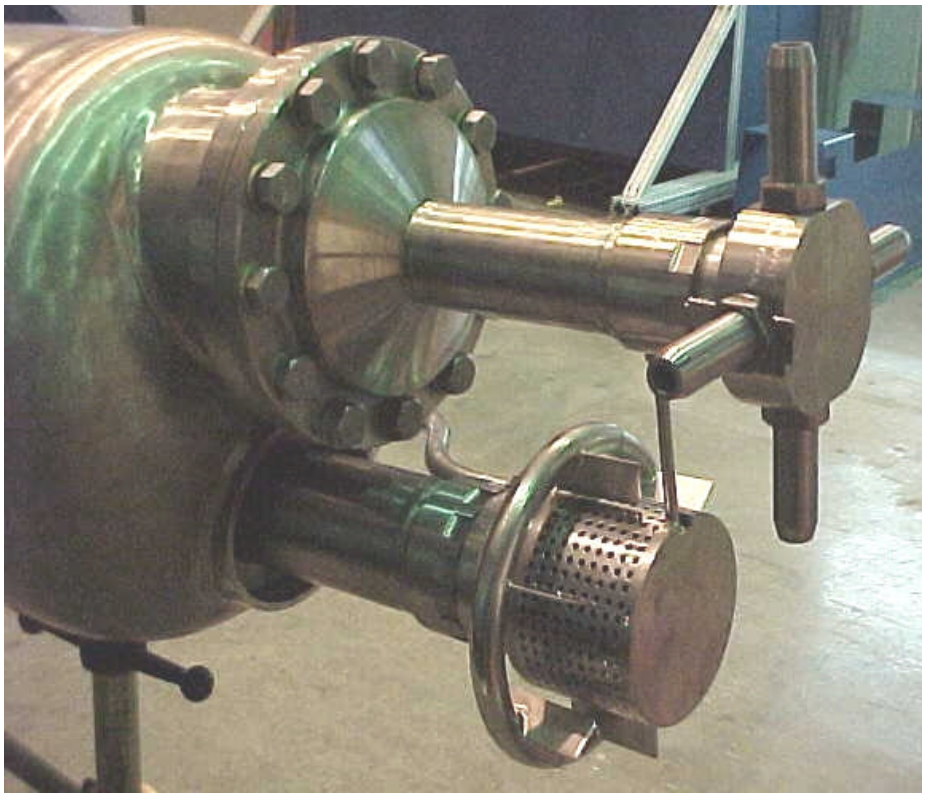

**Figure 1. Bottom of Russian pulsating mixer pump pressure vessel (lying on its side), with screened intake at bottom and four discharge nozzles at upper right.**

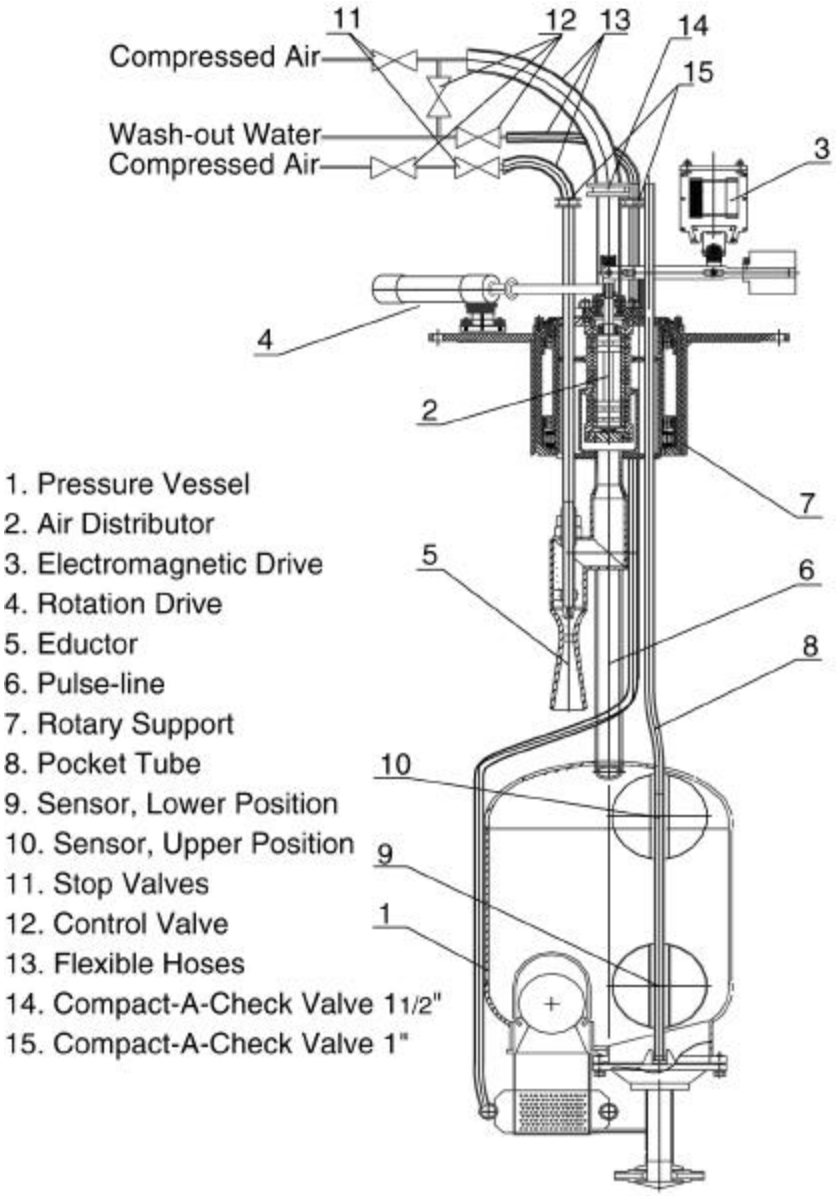


**Figure 2. Russian pulsating mixer pump schematic.**

**Advantages over Baseline**

The primary advantages of the Russian mixer over the baseline motor-driven jet mixer pump are mechanical simplicity, greater scouring force, and the ability to operate in lower liquid levels. The small number of moving parts in the waste tank gives the Russian-designed mixer the following advantages:

- reduced equipment cost,
- reduced weight,
- reduced risk of equipment failure,
- reduced operating cost, and
- reduced power requirements.

## Deployment Summary

A prototype air-operated mixer was provided in July 1997 by the Mining and Chemical Combine at Zheleznogorsk, Russia for testing in an 18-foot-diameter test tank at the Pacific Northwest National Laboratory. The testing demonstrated the ability of the mixer to move solids as far as 7–8 feet away from the nozzles tested. Based on these tests, the Russian mixer was selected to mobilize sludge at Oak

Ridge. American-Russian Environmental Services, Inc. contracted with the Russian commercial firm RadioChem Services Company to fabricate three mixers and one control system at the Mining and Chemical Combine. American-Russian Environmental Services, Inc. contracted with Pacific Northwest National Laboratory to fabricate a tank riser interface, a decontamination spray ring, and a transport cradle for use at Oak Ridge.

Oak Ridge National Laboratory began cold-testing the newly fabricated components in March 2000. Performance tests in the Tanks Technology Cold Test Facility used a mock tank of dimensions similar to tank TH-4 (Lewis and Randolph, 2001). Tests revealed the need for modifications of various support components prior to deployment in a radioactive waste tank. The mixing system was deployed January 12–15, 2001 in radioactive waste storage tank TH-4, which has a diameter of 20 feet and a total working capacity of 14,000 gallons. The mixer successfully slurried 6,300 gallons of settled sludge, which was then pumped out of the tank with an air-powered, double-diaphragm pump, leaving a 4-inch-deep ring of slurry near the tank wall equivalent to 1,100 gallons.

**Participants**

- Department of Energy, Office of Science and Technology, Tanks Focus Area
- Department of Energy, Office of Science and Technology, Industry Programs
- Department of Energy, Environmental Management International Programs
- Pacific Northwest National Laboratory
- Oak Ridge National Laboratory
- National Energy Technology Laboratory
- Mining and Chemical Combine (nuclear installation in Zheleznogorsk, Russia)
- RadioChem Services Company (in Russia)
- American-Russian Environmental Services, Inc.

**Commercial Availability**

The Russian pulsating mixer pump is manufactured by the Mining and Chemical Combine, a Russian Ministry of Atomic Energy nuclear installation in Zheleznogorsk, Russia. Three mixers and a support system were supplied to Oak Ridge by the American-Russian Environmental Services, Inc., a United States corporation representing a consortium of Russian enterprises.

## Contacts

**Technical**

Mike Rinker, Principal Investigator, Pacific Northwest National Laboratory, (509) 375-6623, mike.rinker@pnl.gov.

Thomas Albert, American-Russian Environmental Services, Inc., (727) 734-3800, tom_albert@ares-inc.com.

Ben Lewis, Oak Ridge National Laboratory, (865) 574-4091, lewisbejr@ornl.gov.

**Management**

Jeet Malhotra, National Energy Technology Laboratory, (304) 285-4053, jmalho@netl.doe.gov.

Pete Gibbons, Retrieval Technology Integration Manager, Numatec Hanford Corporation, (509) 372-4926, peter_w_gibbons@rl.gov.

Ted Pietrok, Tanks Focus Area Management Team Lead, (509) 372-4546, theodore_p_pietrok@rl.gov.

Kurt Gerdes, Tanks Focus Area Program Manager, (301) 903-7289, kurt.gerdes@em.doe.gov.

**Other**

All published Innovative Technology Summary Reports are available on the Office of Science and Technology Web site at www.em.doe.gov/ost under “Publications.” The Technology Management System, also available through the Web site, provides information about the Office of Science and Technology programs, technologies, and problems. The Tech ID for the Russian pulsating mixer pump is 2370.

# SECTION 2
# TECHNOLOGY DESCRIPTION

## Overall Process Definition

**Description of the Technology and Supporting Equipment**

The Russian pulsating mixer pump is a reciprocating, air-operated mixer consisting primarily of a pressure vessel, screened intake, check valve, compressed air supply, and discharge manifold with four jet nozzles. An electromechanical air-distribution valve directs compressed air to create vacuum or pressure in the pressure vessel. Check valves in the water and air supply lines are used to control the direction of flow. The maximum working pressure of the mixer is 230 psi. The entire system is remotely controlled and monitored by a laptop computer using LabVIEW™ software (Hatchell et al. 2001).

The mixer uses two distinct, alternating stages—fill and discharge—to perform its mixing action (see Figure 3). During a fill stage, vacuum is created in the pressure vessel by valving compressed air through an eductor mounted on the mixer assembly. The vacuum draws waste slurry into the pressure vessel through a coarse screen and check valve assembly (Hatchell et al. 2001). If the screened intake becomes plugged, wash water can be sprayed on it from a spray ring permanently mounted around the intake (visible in Figure 1). When the sensor float reaches the upper position, a magnet in the float activates the sensor inside the pocket tube, and the compressed air to the eductor is valved off. The valving is changed, and the vessel is pressurized with compressed air to forcefully discharge the waste slurry through four jet nozzles positioned just above the floor of the tank. The force of slurry exiting the nozzles mobilizes sludge and settled solids on the floor of the tank. The mixer can be continuously rotated through a 90-degree arc in alternating clockwise and counterclockwise directions.

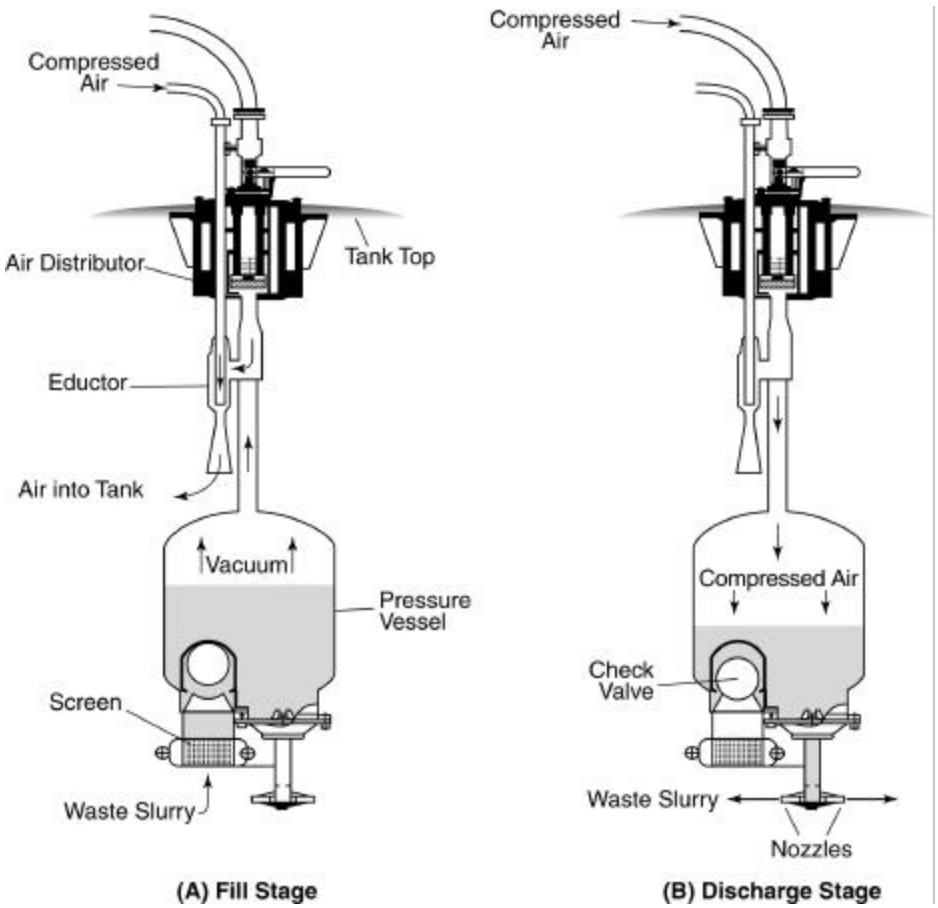


**Figure 3. Material movement during alternating mixer stages.**

Support systems include the mixer control system, tank riser interface, decontamination spray ring, and transport cradle. Table 1 describes the equipment and design requirements (ORNL 1999).

**Table 1. Equipment description and functional requirements**

| Component | Description | Design requirements |
|---|---|---|
| Mixer assembly | Includes the pressure vessel and piping, check valves, strainer, fresh water back-flush system, nozzles, rotation system, and containment seal/isolation system | • Be deployed through existing tank risers, which may have a minimum opening of 23.5 inches without riser sleeve and 22.5 inches with steel riser sleeves.<br>• Withstand storage at ambient conditions of -20° to 120° Fahrenheit and 100% relative humidity.<br>• Minimal cracks, crevices, depressions, or enclosed voids that will not drain or that cannot be cleaned by the jets from a spray ring or by internal flushing. |
| Mixer control system | Includes remote and tank top control, instrumentation, interfaces, control valves and manifold, and a personal computer with accompanying software | • Provide automatic shutdown in case of tank pressurization or loss of containment.<br>• Allow remote operation of the system.<br>• Continuously monitor and record system-operating conditions. |
| Tank riser interface | Consists of the riser interface, lifting lugs, service support platform interface, control valve support structure, dust cover, height adjustment system for the mixer pump, and out-of-tank support structures | • Provide an interface between the mixer pump and the tank riser, the service support platform, site utilities (electrical, air, and water), and the control system.<br>• Provide lifting lugs for crane.<br>• Provide for a height adjustment of 22 inches, the lowest position within 1 inch of tank floor.<br>• Dust cover permits access to any out-of-tank components requiring routine maintenance. |
| Decontamination system | Includes a spray ring to wash down the mixer as it is withdrawn from riser | • Remotely operated to remove surface contamination from the in-tank components prior to the removal of the mixer from the riser.<br>• Attached to the tank riser interface. |
| Transport cradle | Storage and transport container for mixer | • Hold mixer for lifting into vertical position over tank riser. |

## System Operation

Table 2 summarizes the performance requirements for mixer deployment in tank TH-4 (ORNL 1999).

**Table 2. System operation requirements**

| Operational area | Requirements |
|---|---|
| Special operational parameters | • No accumulation of solids and/or contamination inside system components during operation.<br>• Mobilize solids in a 360-degree arc around the base of the system and mobilize solids beneath the mixer pump.<br>• Operate over a range of sludge heights 0–3 feet and supernatant liquid heights 0.5–10 feet.<br>• Operate in a tank waste environment of temperature 40–140° Fahrenheit, radiation field of 150 roentgens/hour, and 7–12 pH. |

| Operational area | Requirements |
|---|---|
| Materials, energy, other expendable items | • Single connection points for compressed air, process water, and electrical power feed.<br>• Operate for 1000 hours over a 2-year span without scheduled maintenance being performed to the in-tank components of the system.<br>• Out-of-tank components serviced without removing the mixer from the riser.<br>• All replacement parts and maintenance items readily available in the United States. |
| Personnel requirements | • Human factors taken into consideration and a modular design approach implemented to ensure ease of equipment setup, operation, maintenance, and removal.<br>• Insertion and withdrawal of the mixer accomplished with a single hoist or crane with minimal human exposure to the load during lifting and rigging operations. No work beneath a suspended load. (Two cranes were actually needed.)<br>• Manual replacement of the swivel bearings and hoses while within the contamination control bag located over the riser. |
| Secondary waste streams | • Decontamination fluid remains within the tank.<br>• Radioactive gas, air, liquid, or aerosols do not escape from the tank during operation, while idle, or during loss of control system or electrical power.<br>• System provides and maintains tank containment even in the case of the tank becoming pressurized.<br>• The maximum airflow into the tank does not produce a positive pressure inside the tank or riser space.<br>• Aerosol generation rate within the tank during operation or failure of the mixer pump does not exceed tank safety limits. |
| Potential operational concerns and risks | • In-tank surfaces of the mixer vertical, tapered, rounded, or shrouded so that the mixer can be inserted and removed from the tank without interfering with the tank riser (i.e., catch on the riser lip).<br>• During deployment or removal, the longitudinal axis of the mixer remains perpendicular with the deck of the support platform.<br>• The weight of the mixer establishes the insertion level into the waste. Operational procedures account for any effects of buoyancy due to components and piping being empty at the time of deployment or removal. |

# SECTION 3
# PERFORMANCE

## Demonstration Description

**Testing at Pacific Northwest National Laboratory**
A prototype of the Russian pulsating mixer pump, called a pulsating monitor, was tested in July 1997. The pulsating monitor consisted of separate components, including an air-operated mixer, a vacuum eductor, compressed air supply, and a flow control unit. These components were demonstrated using an 18.75-foot-diameter tank (Enderlin, Mullen, and Terrones 1997). The mixer contained two diametrically opposed jet nozzles with a 0.31-inch-diameter opening. The nozzles were fixed during the tests.

The demonstration used washed medium sand spread over the tank bottom with water as a supernatant liquid. The sand provided visualization of the flow influence, which the jet nozzles created on the floor of the test tank. By using 80-psi compressed air, the jet nozzles were able to mobilize sand out to a radius of 7–8 feet. The testing provided an understanding of equipment operation, which led to suggestions for improvements necessary for remote operations in radioactive waste tanks.

**Cold-Testing at Oak Ridge National Laboratory**
Cold-testing began in March 2000 on one of the three Oak Ridge mixers fabricated at the Mining and Chemical Combine in Zheleznogorsk and provided by the American-Russian Environmental Services, Inc. The Oak Ridge mixer was equipped with a U.S.-prescribed control system and an eductor attached to the mixer assembly so the eductor would discharge inside the waste tank during operation. The Oak Ridge mixer also included a larger-capacity pressure vessel that required a nominal 23-inch-diameter riser for tank installation. Cold-testing consisted of pretest inspections, functionality tests, and performance tests (Lewis and Randolph, 2001).

***Pretest inspections*** to assess the fabrication quality of the system components included a review of fabrication documentation such as quality assurance records, weld inspections using ultrasonic testing, and as-built drawings. Inspections also included visual analysis, nondestructive evaluation, materials composition analysis, and hydrostatic tests. The pressure vessels were successfully hydrostatically tested to 345 psi. As a result of the pretest inspections, the following modifications were made:

- weld repairs on two of the three pressure vessels,
- weld slag cleanup on one mixer assembly,
- replacement of broken components on the tank riser interface,
- installation of grease fittings on the transport cradle,
- completion of the wiring of the mixer control system, and
- rewiring the tank riser interface drive motor brake.

***Functionality tests*** were conducted to assess the functionality of the tank riser interface, decontamination spray ring, control system components, transport cradle, support fixtures, and contamination control features. All hardware components performed satisfactorily with some minor modifications and replacement of select components to improve operation and reliability. Relays were added to control modules and emergency stops were added. The control system program was extensively revised to improve functionality and simplify operation. The lifting points for the tank riser interface were moved from the top of the frame to the base plate so that the combined mixer and tank riser interface could be lifted as a single unit.

***Performance tests*** were performed in the Tanks Technology Cold Test Facility in a 20-foot-diameter mock tank to simulate deployment in tank TH-4. The decontamination spray ring water jets operating at 500 psi removed all visible, dried kaolin clay simulant that had been smeared on mixer piping. In a debris tolerance test, the mixer operated 2 hours with no problem or blockages in the presence of plastic bags, rubber gloves, and tape.

The cleaning radius test evaluated four nozzle sizes between 0.4 and 0.6 inch using a 90-psi air supply. Waste was simulated with medium-grain sand, 3/8-inch gravel, and kaolin clay. Using the operating pressure of 90 psi, the nozzle size did not dramatically affect the cleaning radius for each material tested.

A cleaning radius of 7–8 feet was observed with the nozzles stationary. When the mixer oscillated, a cleaning radius of 6–8 feet was observed, depending on the depth and type of material tested. At higher operating pressures, the effective cleaning radius may be greater.

Sludge simulant representative of tank TH-4 sludge was placed in the bottom of the mock tank. Mixing and pumping tests were conducted using water depths 1–3 feet with the mixer positioned approximately 1 inch from the floor of the tank. The clay-sand mixtures were easily mobilized to the outside walls of the tank after 45 minutes of mixing time. A positive displacement diaphragm pump was placed near the circumference of the tank to remove the slurry during the mixing process. Very little sludge remained in the mock tank after the mixing and pumping operations were completed.

**Deployment Site Description**

Tank TH-4 has a 20-foot inner diameter, 6.5-foot vertical sidewalls, a 2.6-foot dome rise, and nominal capacity of 14,000 gallons. It was constructed by spraying a cement slurry (gunite process) against a lattice of integral reinforcing bars. Design information indicates a wall thickness of 6 inches and a floor thickness of 3 inches. The floor and wall were coated with a ¼-inch layer of asphalt and a final 1½-inch-thick coating of gunite. The tank is covered by a maximum of 6 feet of soil. Figure 4 shows the weather protection enclosure made with aluminum panels and a Plexiglass door.

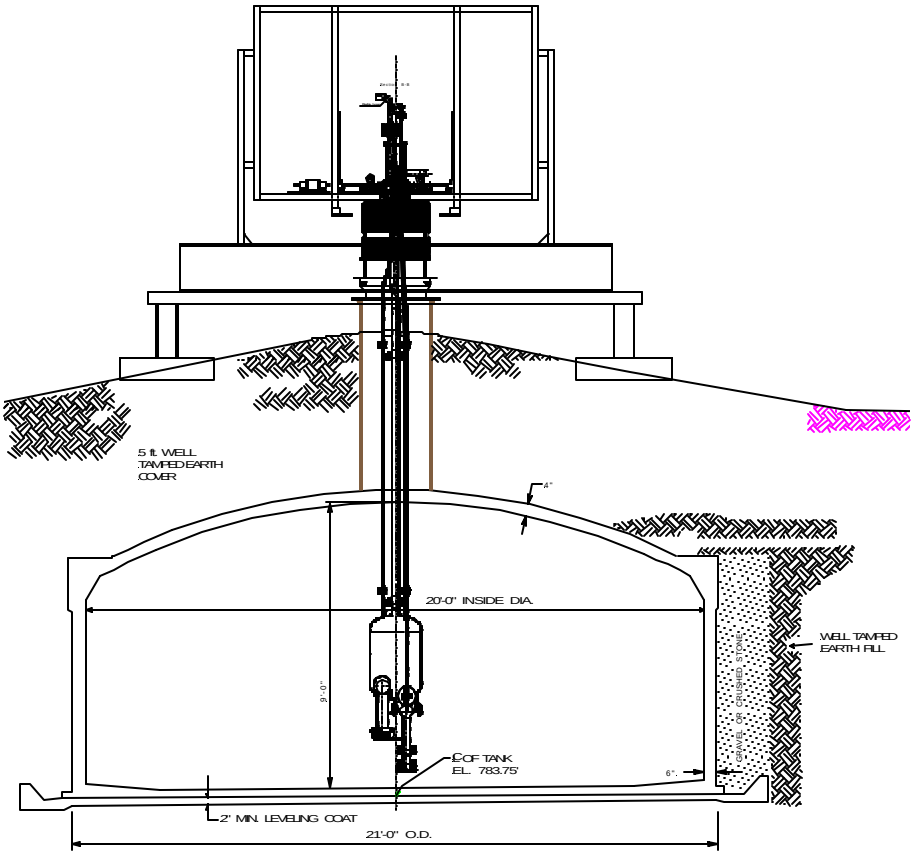


**Figure 4. Mixer installation in Oak Ridge tank TH-4.**

Tank TH-4 contained radioactive waste consisting of 2.5 feet (6,300 gallons) of settled sludge covered by 4 feet of liquid. The solid waste was not heat generating or sensitive to impact, rubbing, or abrasion. The solid waste was a mixture of silt, clay, agglomerated particles (the consistency of paste) and crystallized solids with a particle size range from 10 microns (0.0004 inch) to 3/8 inch. The specific gravity of bulk slurry ranged 1–1.47. The sludge included lumps of gunite and miscellaneous debris such as plastic bags and metal cans ("floats"). Tank temperature ranged 40–80° Fahrenheit. The radiation level ranged 0.1–50 roentgens per hour with point sources in excess of 150 roentgens per hour.

## Deployment Results

The Russian mixer was deployed in Oak Ridge tank TH-4 on January 12, 2001. The maximum air pressure available in the tank farm was about 90 psi. Using 90-psi compressed air, the mixer began operation with a 35-second fill stage and a 7-second discharge stage. After 30 minutes, the fill stage increased beyond 60 seconds, which automatically shut the mixer down. The system was restarted and experienced the same condition. Back-flushing restored normal operations for 5–10 cycles, after which the automatic shutdown recurred. Adjusting the eductor air supply pressure and opening valves did not

significantly affect the automatic shutdown condition. After 2 hours of intermittent mixing, a sample of slurry was taken, and the system was flushed and shut down. The specific gravity of the slurry was 1.004.

The mixing campaign resumed on January 13, with the same automatic shutdowns occurring, frequently with intermittent sticking of the air distributor valve. Isolating the purge air supply manually while filling and varying the operating pressures didn't appear to affect the operation. After about 2 hours of mixing, the transfer pump was turned on to pump the slurry down to a level where the mixer inlet screen could be observed. The screen was clean, ruling out screen plugging as a cause for slow fill times. The slurry was pumped out of tank TH-4 with an air-operated, double-diaphragm pump (1½-inch Sandpiper Model SB 1-1/2-A manufactured by Warren Rupp.) The specific gravity of the slurry transferred was 1.023.

Operations resumed on January 14 by pumping supernatant into tank TH-4 from the supply tank, W-8. Once the liquid level covered the mixer inlet, the mixer was restarted with the nozzles in a fixed position. There were three pump-in/mix/pump-out cycles. Each time the slurry was pumped out, the mixer was rotated 15–20 degrees. The average specific gravity of the transferred slurry was 1.045. The mixer continued to operate intermittently with automatic shutdowns followed by flushing and restarting. The mixer operated approximately 10 hours intermittently on January 13–14.

On January 15, tank TH-4 was refilled to a total depth of approximately 24 inches with supernatant from tank W-8. The plan was to mix for 30 minutes, pump down to the minimum mixer operating level, mix for another 15–20 minutes, and refill the tank to the 24-inch depth with the mixer operating as continuously as possible. The pump-down rate was approximately 50 gallons per minute. Five of these pump in/mix/pump-out cycles were completed within approximately 10 hours. In the afternoon, when the temperature went above the freezing mark, the mixer operated for over 1 hour with no automatic shutdown. The mixer was shut down, flushed, and restarted. It operated for over 1 hour, when the minimum operating level in tank TH-4 was reached. The system was then flushed out for the final time. The average specific gravity of the slurry was 1.04.

The initial erratic operation of the mixer is believed to have resulted from the below-freezing temperatures at the start of the deployment. Near the end of the deployment on January 15, the temperature rose well above freezing, which seemed to improve the overall performance of the mixer. The combination of the vacuum-pressure cycles and below-freezing conditions is believed to have caused the formation of ice crystals in the air distributor valve, affecting the ability of the mixer to fill and discharge.

The mixer scoured the tank floor and pushed slurry up against the side of tank TH-4 beyond the reach of the jet nozzles to create a ring 1–2 feet wide and 15 inches thick. This accumulation was attributed to the intermittent operation of the mixer. The transfer pump was used to remove tank contents to the minimal pump depth of 4 inches. The 15-inch-thick slurry on the edge slumped toward the middle of the tank to yield an outer band of slurry near the wall of the tank with a final depth of 4 inches (see Figure 5).

When Department of Energy and state regulators inspected tank TH-4 during the week of January 18, 2001 and determined that additional sludge removal would not be necessary, the mixing/transfer operation was suspended. The tank site was subsequently demobilized by removing retrieval support equipment from the top of the tank. The tank was filled with grout and stabilized.

**Figure 5. Final solids configuration in tank TH-4.**

# SECTION 4
# TECHNOLOGY APPLICABILITY AND ALTERNATIVES

## Competing Technologies

Technologies competing with the Russian pulsating mixer pump and some salient characteristics are listed below.

**Mechanical mixer (axial flow mixer)**

- Most common mixing technique in chemical processing industry.
- Places the drive motor inside the tank with a direct drive impeller.
- Blade subject to damage if it contacts or becomes entangled with debris in the waste.
- Least expensive of mixing technologies.
- Motor failure requires replacement of entire mixer.
- May require modification to meet aerosol generation limit (Bamberger 2000).
- Deployed at Savannah River and Oak Ridge.
- See axial flow mixer pump, Tech ID 2232 in Technology Management System Web site at http://tms.em.doe.gov.
- See www.Flygt.com for information on Flygt mixers.

**Pulsed-air mixer**

- Pulses of air pass through distributor plates on bottom of tank.
- Pulses of air disturb solids and create mixing action.
- Simple, low-maintenance technology.
- Potential to pressurize tank.
- Demonstrated at Hanford and Oak Ridge.
- Deployed at Oak Ridge to control solid content of waste transfer feed.
- Heavy sludge settles out of the range of the distributor plate.
- Tank ventilation system must have adequate aerosol handling capabilities (Bamberger 2000).
- Large number of plates required in 75-foot-diameter tanks.
- See Pulsed-Air Mixer Innovative Technology Summary Report (DOE1999b) at www.em.doe.gov/ost under “Publications.”
- See Tech ID 1510 in Technology Management System Web site at http://tms.em.doe.gov.

**Past-practice sluicing**

- Requires large amounts of water.
- Provides little control over solids content of the slurry being transferred.
- Cleaning effectiveness diminishes with distance.
- Internal tank obstructions prevent sluicing action from contacting all waste in tank.
- Used to dislodge and slurry sludge from Hanford tanks 1966–1978.
- Used to dislodge and slurry sludge from Oak Ridge gunite tanks 1982–1984.
- Used to mobilize sludge in Hanford Tank C-106 in 2000.

**Motor-driven jet mixer pumps**

- Mechanical pumps recirculate tank waste through jet nozzles in bottom of tank.
- Baseline mixing technology for Hanford and Savannah River tanks.
- Add heat to the tank waste.
- Leakage of seal water into waste tank up to 10 gallons per minute when mixer is running.
- New design uses gas seals to eliminate use of water.
- Operating lifetimes have been as short as 1,200 hours, now may exceed 3,000 hours.
- Require monthly maintenance called “bumping” (Hall 1996).

**Fluidic pulse jet mixer**

- Vacuum pulls tank waste into chamber; air pressure forces waste out same opening to create mixing action in bottom of waste tank.
- No moving parts inside of tank.
- Requires minimal or no maintenance.
- Significant cost savings over alternative technologies (DOE 1999a).
- Potential to contaminate vacuum system with tank waste.
- May require multiple mixers to achieve effective mixing in large-diameter or elongated tanks.
- Potential to pressurize waste tanks.
- May require modification to meet aerosol generation limit (Bamberger 2000).
- Deployed at Oak Ridge in Bethel Valley Evaporator Service Tanks.
- See the AEA Fluidic Pulse Jet Mixer Innovative Technology Summary Report (DOE 1999a) at www.em.doe.gov/ost under “Publications.”
- See Tech ID 1511 in Technology Management System Web site at http://tms.em.doe.gov.

The Russian pulsating mixer pump technology is favored over competing technologies for applications requiring inexpensive and lightweight equipment that can be designed for various riser openings. Operation of the Russian mixer is relatively simple; it uses pressure differentials that are easily monitored and regulated with a simple control strategy. Jet nozzles can be located an inch off the tank floor, where they have the ability to scour the tank bottom and break up settled sludge.

## Technology Applicability

The Russian pulsating mixer pump is a relatively simple piece of equipment for mixing solutions and sludges. The equipment has been used successfully at the Russian Mining and Chemical Combine for facilitating removal of accumulated tank sludges. Russian specialists from RadioChem Service Company have deployed the mixer for radioactive waste retrieval in Russia.

American-Russian Environmental Services, Inc. provided a Russian pulsating mixer pump and two spares to Oak Ridge. One mixer was deployed in tank TH-4. The two spares are available for deployment at other locations. One potential location is the Hanford Site, which has 177 underground waste tanks, including sixteen 55,000-gallon, single-shell tanks with dimensions similar to those of tank TH-4 (20 feet in diameter and 24 feet deep). Future testing at Hanford has been considered.

## Patents/Commercialization/Sponsor

This work was sponsored by the U.S. Department of Energy, Russian Ministry of Atomic Energy, and the Joint Coordinating Committee for Environmental Restoration and Waste Management. The Department of Energy Office of Science and Technology and National Energy Technology Laboratory awarded a contract to American-Russian Environmental Services, Inc., a U.S. corporation representing a consortium of Russian enterprises, to provide the Russian mixer developed by the Russian Mining and Chemical Combine.

The intellectual property rights are owned by the Mining and Chemical Combine. The mixer and its support systems are available through the American-Russian Environmental Services, Inc. Information on the firm is available from its Web site at www.ares-inc.com.

# SECTION 5
# COST

## Methodology

The methodology is to compare the cost of the Russian pulsating mixer pump with the existing baseline. The existing baseline at most sites is the motor-driven jet mixer pump where 1–6 mixers may be used to mix the contents of large 75- to 80-foot-diameter tanks containing 500,000–1,300,000 gallons of waste (Hall 1996). The baseline for mobilizing sludge in the smaller tanks at Oak Ridge varies; however, costs are available for the recent Oak Ridge application of AEA fluidic pulse jet mixers in the five 50,000-gallon, Bethel Valley Evaporator Service Tanks (DOE 1999a).

## Cost Analysis

Table 3 compares capital, installation, disposal, operating, and maintenance costs of the motor-driven jet mixer pump with similar costs for the air-operated Russian pulsating mixer pump (Hall 1996). This comparison is qualitative, as the actual costs may vary depending on radiation levels, specific tank conditions, and riser availability. In addition, the comparable overall cost is influenced by other factors such as the number of mixers needed, tank loading restrictions, and availability of existing infrastructure.

**Table 3. Cost comparison for motor-driven jet mixer pump and air-operated Russian mixer.**

| Component | Motor-driven jet mixer pump | Air-operated Russian mixer |
|---|---|---|
| Capital equipment | $310K at Savannah River | $175K at Oak Ridge |
| Installation | $100K every 5 years | $100K one-time cost |
| Disposal | $125K every 5 years | $55K one-time cost |
| Operation and maintenance | $14K per year | Estimated under $5K per year |
| Tank upgrades | May require platform over tank to bear the weight of the mixer pump | Less likely to require tank upgrade due to lighter weight of mixer |

**Capital Cost**
The capital cost for one Russian pulsating mixer pump at Oak Ridge was $175K. A larger, motor-driven jet mixer pump installed in Tank 51 (1.3 million gallons) at the Savannah River Site cost $310K (Hall 1996). Two different types of motor-driven jet mixer pumps for the Hanford Project W-211 had cost estimates of $620K and $752K, but these were for extremely large (60-feet-long) mixers that could recirculate 10,000 gallons per minute. Two of these mixers could mix the contents of 500,000- to 1,000,000-gallon waste tanks 75 feet in diameter (Hall 1996). The capital cost of an AEA fluidic pulse jet mixer was $550K per 55,000-gallon horizontal tank at Oak Ridge (DOE 1999a). While the capital cost of the Russian mixer appear to be the lowest, the cost of deployment in a 14,000-gallon tank with a 20-foot diameter cannot be extrapolated to larger 75-foot-diameter tanks. It is not known how many Russian mixers would be needed to mix larger-diameter tanks. Therefore, there is no apparent capital cost advantage provided by the Russian mixer.

**Installation Cost**
The installation cost for a jet mixer pump in Tank 51 at Savannah River was $100K (Hall 1996). The estimated installation cost for a jet mixer pump in Project W-211 at Hanford was $140K per mixer. The installation cost of the Russian mixer at Oak Ridge was approximately $100K. There is no apparent installation cost advantage provided by the Russian mixer.

**Disposal Cost**
The cost for removing and disposing a motor-driven jet mixer pump from Tank 51 at Savannah River was $125K (Hall 1996). The cost for removing and disposing a motor-driven jet mixer pump associated with Project W-211 at Hanford was estimated to be $410K per mixer (Hall 1996). The cost for removing and disposing the Russian mixer in tank TH-4 at Oak Ridge, $55K, includes cutting off the bottom half of the mixer, which was left on the floor of the tank. The top half was decontaminated as it was removed and disposed. Disposal costs included the removal of the support platform over the top of tank TH-4 for reuse and capping the riser. While the Russian mixer appears to have a disposal cost advantage, the amount of

equipment disposed is far less than the baseline. If four or more Russian mixers are needed to equal one baseline mixer in a large tank, all apparent disposal costs advantages would disappear.

The average life of motor-driven mixer pumps can be as low as 1,200–2,000 hours for pumps with a claimed design a life of 5,000 or more hours (Hall 1996). The need for mixing operations ranges 1,000–25,000 hours over the next 20 years in support of waste consolidation and waste immobilization. Motor-driven jet mixer pumps could be replaced five times or more in a 20-year period. An estimated life of 1–5 years reflects the uncertainty in failure rates for motor-driven jet mixer pumps.

**Operating and Maintenance Cost**

The baseline motor-driven jet mixer pumps require electricity ($2,500 per year), freeze protection ($2,500 per year), and scheduled monthly maintenance ($9,000 per year) for an annual operating cost of $14K (Hall 1996). The cost of evaporating the seal water that leaks into the tanks was not included. Operating costs do not include tank farm staffing costs, which are relatively constant regardless of whether mixers are operating.

The annual operating cost of the air-operated Russian mixer is significantly less than that of a motor-driven jet mixer pump. The Russian air-operated mixer uses an insignificant amount of electricity for the control system and does not require monthly maintenance or freeze protection. An existing tank farm compressed air system was used to operate the mixer in tank TH-4. Future applications may incur cost to provide compressed air. The estimated operating and maintenance cost is less than $5K per year.

**Technology Scale-Up**

A single air-operated Russian mixer can be used in several tanks with little or no modification to the existing infrastructure. The size of the mixer can be scaled for use on different size tanks and risers. The two existing Russian mixers at Oak Ridge can be deployed through risers if there is a minimum opening of 23.5 inches without a riser sleeve and 22.5 inches with a riser sleeve.

The testing of the Russian mixer in a larger-diameter tank is a future consideration. The mixing forces are expected to extend beyond the current radius of 7–8 feet if the operating pressure can be increased to the design level of 230 psi. The application of the Russian mixer is oriented more toward breaking up well-settled sludge on the bottom of a tank than toward mixing the contents of a tank. It remains to be seen how the scouring area will increase as operating pressures are increased to design levels.

**Cost-Benefit Analysis**

The benefit of a Russian mixer appears to be lower operating costs and lower long-term replacement costs. If a Russian mixer can operate for 20 years while the baseline motor-driven jet mixer has to be replaced once every 5 years, the cost savings become apparent. However, until the effective mixing radius at 230 psi is determined, the number of Russian mixers required for larger-diameter tanks remains unknown.

## Cost Conclusions

The Russian pulsating mixer pump has lower operating costs and lower long-term replacement costs than the baseline motor-driven, jet mixer. The deployment in Oak Ridge tank TH-4 provided costs for deployment in a 14,000-gallon, 20-foot-diameter tank. The Oak Ridge deployment costs are actual costs, which are useful for extrapolation to similar applications in similar tanks.

# SECTION 6
# OCCUPATIONAL SAFETY AND HEALTH

The innovative feature of the Russian pulsating mixer pump is fewer moving parts in the waste tank compared to the baseline motor-driven jet mixer, resulting in less maintenance and fewer replacements of highly contaminated equipment, thus reducing the radiation exposure to tank farm staff. However, new safety concerns are created by moving equipment on top of the tank and compressed air both on top and inside the tank.

## Comparison with Baseline Operating Safety

The baseline motor-driven jet mixer has no moving parts on top of the tank. The only moving pieces of equipment are located inside the tank. The only service required is water for the seals and electricity to operate the motor.

The Russian pulsating mixer pump requires the use of compressed air. During the fill stage, the Russian mixer uses compressed air to operate an eductor attached to the mixer inside the waste tank. The compressed air exiting the eductor enters the waste tank, where there is concern to maintain negative pressure under both normal operation and during an accident.

During the discharge stage, compressed air is used to force the contents of the mixer pressure vessel through jet nozzles into the waste tank. If the level sensor fails, compressed air could be blown through the jet nozzles into the waste tank. An interlock is required to automatically shut down compressed air if a loss of negative pressure is detected in the waste tank. The maximum flow rate of air into the tank could be as high as 200 cubic feet per minute. The limiting factor for flow may be lower based on actual ventilation flow for the tank selected for deployment (ORNL 1999).

The Oak Ridge mixer was built to Russian fabrication standards, which could not be shown equivalent to U.S. American Society of Mechanical Engineers Boiler and Pressure Vessel code requirements. A top-level cross-walk of the standards was done, but actual detailed comparisons of the different code requirements was outside the scope of the work. Oak Ridge chose to accept the risk of using a pressure vessel not qualified by the American Society of Mechanical Engineers inside a waste tank based on the results of detailed inspections of the Russian mixers, successful hydrostatic tests to 345 psi, assessment of material composition information, and impact analysis from potential failures. While the pressure vessel was rated for 230 psi, the only air supply available in the tank farms was 90–100 psi.

The Russian mixer oscillates through a 90-degree arc in 7 seconds. The swivel bearings require regular lubrication. The oscillation of equipment on the top of the tank creates an added safety consideration. The tank riser interface provides the necessary mechanical guards for the moving equipment.

For the cold tests at the Pacific Northwest National Laboratory, the Mining and Chemical Combine provided a separate eductor to generate a vacuum for the fill cycle. The eductor was mounted away from the test tank. Testing revealed that the eductor generated an aerosol of the materials undergoing vacuum transfer.

Before a new mixer was provided to Oak Ridge for testing, the eductor was attached to the portion of the mixer assembly that goes inside of the waste tank. This design change solved the problem of providing containment for eductor aerosols. However, it created a potential new safety problem regarding the rate at which radioactive aerosols are generated inside the tank. A passive flow restriction was installed to limit the aerosol generation rate within the waste tank during operation or failure of the mixer (ORNL 1999). The intent was to ensure that the tank off-gas system safety limits could not be exceeded.

A safety benefit was created by locating the eductor inside the tank. In the event that the level sensor failed, radioactive waste could be pulled up into the eductor. With the eductor located inside the waste tank, the radioactive waste would simply be recycled back into the waste tank.

## Comparison with Baseline Maintenance Safety

The baseline motor-driven jet mixer pump has no moving parts on top of the tank. The moving parts are located inside the tank where no maintenance can be performed. When a motor-driven jet mixer pump fails, replacement is essentially the only option. Replacement of jet mixer pumps requires substantial preparation to minimize radiation dose to maintenance workers and to avoid the spread of contamination.

The air-operated Russian mixers have moving parts on top of the tank. The presence of moving parts adds more maintenance requirements than for baseline mixers. Hoses for compressed air must be positioned to avoid pinching and to minimize wear. The rotation drive must be deactivated during maintenance. Maintenance of the tank ventilation system may be greater due to the increased generation of aerosols. Depending on the specific design, there may be a need to change filters more often to stay within operational radiation limits.

## Required Safety and Health Measures

The use of the air-operated Russian mixer in a radioactive waste tank requires attention to the waste tank ventilation system safety requirements. Interlocks and procedures must be in place to ensure that the ventilation system can safely accommodate the addition of compressed air and aerosols to the tank.

Additional precautions associated with mechanical movement and compressed air hoses on top of the tank should be reflected in operating procedures and operator training.

## Safety Lessons Learned from Demonstration of Technology

The gradual reduction of vacuum with increasing cycles plagued the initial deployment of the Russian mixer in tank TH-4. Routine operation occurred when the air temperature rose above freezing. A lesson learned was to keep the top-of-tank equipment from freezing.

A safety lesson learned early in cold-testing was to locate the eductor inside the waste tank. Fine particulate was observed coming from the eductor during cold-testing. Containment of the eductor aerosols was achieved by attaching the eductor to the portion of the mixer assembly located inside the waste tank.

# SECTION 7
# REGULATORY AND POLICY ISSUES

## Regulatory Considerations

The Oak Ridge National Laboratory Gunite and Associated Tanks Treatability Study project was initiated in fiscal year 1994 to support a record of decision in selecting from seven different options of technologies for retrieval and remediation of these tanks. This decision process is part of a Comprehensive Environmental Response, Compensation, and Liability Act of 1980 (CERCLA) remedial investigation and feasibility study presented to the U.S. Department of Energy and the Tennessee Department of Environment and Conservation. As part of this decision process, new waste retrieval technologies were evaluated.

**Secondary Waste Streams**
No air emissions from equipment in a waste tank to the external environment occurred at Oak Ridge. No hazardous materials, such as oil, could be used without prior approval. No lead-based paint/finishes or exposed lead shielding or materials were used.

**Comprehensive Environmental Response, Compensation, and Liability Act/Resource Conservation and Recovery Act Considerations**
Mobilization of sludge by Russian mixer technology was regulated under CERCLA for the Oak Ridge Gunite and Associated Tanks Remediation Project. This section addresses the nine CERCLA evaluation criteria.

1. Human Health and Environment—The majority of the Russian mixer technology is fully contained within the tank, thereby reducing the risk to human health and the environment.

2. Compliance with Applicable or Relevant and Appropriate Requirements—The Russian mixer was designed and constructed by the Mining and Chemical Combine in Zheleznogorsk, Russia to comply with good engineering practice. Work is under way to achieve future compliance with American standards.

3. Long-Term Effectiveness—Deployment of the Russian mixer enabled improved retrieval of nuclear waste from an underground tank, supporting the long-term program to remediate nuclear waste sites.

4. Reduction of Volume—The Russian mixer did not require additional water to implement the technology. Existing liquid waste was added to tank TH-4 to repeat the cycle of add waste, mix, and pump. Use of the Russian mixer did not increase the volume of waste in the tank.

5. Short-Term Effectiveness—The Russian mixer design included many fail-safe features. Some hypothetical incidents could cause contaminated material to inadvertently escape the tank.

6. Implementability—Full-scale implementation of the Russian mixer technology is simple and easy.

7. Costs—Costs to operate the Russian mixer technology are lower than those of the primary competing technology (i.e., jet mixer pumps).

8. State Acceptance—The state of Tennessee recognized the Russian mixer as a viable technology to mobilize and mix sludge in a tank. State acceptance has been very favorable towards this technology.

9. Community Acceptance—Community acceptance has been favorable. Public meetings have been conducted to address tank issues at Oak Ridge, and no negative feedback has been received regarding the use of the Russian mixer technology in the tanks.

## Safety, Risks, Benefits, and Community Reaction

### Worker Safety

An Oak Ridge health and safety officer participated in the review of the Russian mixer system during the system design, procurement, construction at the Tanks Technology Cold Test Facility, testing, and operation. The system design was reviewed to assess both occupational and operational safety issues. The system was designed to meet applicable Occupational Safety and Health Administration Standards. Specific items examined included:

- radiological issues such as criticality safety, as low as reasonably achievable, double containment, remote handling, and system repair;
- installation issues such as code compliance;
- operational issues such as pressure vessel testing, hoisting, and rigging; and
- occupational issues such as human access, platforms, handrails, noise levels, and hearing protection.

The Russian mixer does not directly expose workers to hazardous or radioactive materials. The mixer operates on automatic cycles, thereby reducing the potential risk to workers.

### Community Safety

There is no history of accidents with this technology. All technology deployments are required to comply with Department of Energy's safety policies and guidelines. It is expected that deployment of Russian mixers at other sites would be covered by an amendment to an existing Safety Analysis Report.

### Environmental Impacts

This technology has the potential to cause a release of contaminants, which makes it necessary to install new interlocks and new procedures for safe operation of the ventilation system of each tank. No unusual impacts are expected from transportation of equipment, samples, waste, or other materials associated with this technology.

# SECTION 8
# LESSONS LEARNED

## Implementation Considerations

The following lessons learned are a combination of results derived from cold and hot tests, which contributed to the evolutionary development and present state of the Russian pulsating mixer pump. Many of these findings have been incorporated into the design to resolve problems experienced in testing.

**Cold Test at the Pacific Northwest National Laboratory**
The cold test was the first experience in the United States with the Russian mixing equipment. The test revealed a need to develop a feedback control and monitoring system to achieve automated operation (e.g., automated fill and discharge cycle). The cold test led to the recommendation to incorporate the latest U.S. commercially available software and instrumentation.

The cold test revealed a need to improve the check valve and inlet design to prevent in-tank debris from fouling the operation of the system. A screen was added to the inlet port for the Oak Ridge mixer.

The cold test revealed a need to increase the flexibility of the valve configuration for the system to provide independent control of the supply and vacuum line pressures.

There was a need to wash the screen over the inlet port. A spray ring was added to the outside of the inlet port screen (see Figure 1).

The eductor was located outside of the tank for the cold test. When aerosols were detected in the eductor discharge, it was realized that the eductor could not be used to pump radioactive or hazardous waste unless the eductor discharge was either contained or treated. The eductor was subsequently attached to the portion of the mixer assembly located on the inside of the waste tank. The relocation of the eductor also solved the noise problem. (During the cold test, the eductor emitted a noise greater than 90 decibels at 20 feet.)

**Cold Tests and Hot Deployment at Oak Ridge National Laboratory**
Height adjustments were needed to achieve discrete elevations for prolonged operations. The tank riser interface was designed to adjust mixer elevation when using risers at varying elevations above the tank floor. Height adjustments will not be required while the mixer is running.

The Russian mixer oscillates and is connected to compressed air and water lines by flexible hoses. The support structure for the control valves must be designed and positioned to avoid interference with the rotation of the mixer. The support structure was designed to limit stress and wear on the hose and associated connections.

The dust cover should be designed to meet the requirement of a mechanical guard over all out-of-tank moving parts with the potential to cause bodily injury or equipment damage. The cover should also be designed to prevent the entry of rainwater.

To meet the requirement of a single pick for deployment and removal of the mixer, a cradle/support device should be designed to accompany the tank riser interface.

The air supply to the mixer for the discharge cycle was varied from 45–90 psi. The purge time was typically around 7.2–7.4 seconds. The eductor pressure was found to operate effectively in the range of 30–35 psi.

The air distributor valve iced up when operated at air temperatures below freezing, resulting in prolonged filling of the pressure vessel, which timed out and automatically shut down the mixer. When the air temperature increased above freezing, the mixer worked as designed. The lesson learned was to add an enclosure to keep the temperature of the air distributor valve above freezing.

## Technology Limitations and Needs for Future Development

The maximum air flow rate into the mixer pressure vessel was 200 cubic feet per minute. The final limiting factor for flow may be slightly lower, based on the estimated aerosol generation rate for the mixer design or measured ventilation flow for the actual tank selected for deployment.

Initially, the charge time varied significantly due to problems with seating of the air distributor valve. Typical charge times during normal operation were 32–35 seconds but continued to vary up to 60 seconds. Following a flush and restart of the mixer, a 35-second charge time was observed for three to four cycles, after which the charge time continually increased until it timed out after five to ten charge cycles. Manual operation of the discharge air supply didn't resolve the situation. Performance of the air distributor valve improved in warmer temperatures. A small weep hole was added to the air distribution valve housing for units 2 and 3 to limit the vacuum level in the valves and prevent excessive vapor from condensing in the valve and freezing.

The pressure vessel was rated for 230 psi; however, only 90–100 psi air was available in the Oak Ridge National Laboratory tank farm. Operating at higher pressure would have increased the cleaning radius of the jets and resulted in lower residual sludge levels (Hatchell et al. 2001). Additional testing to measure the cleaning radius at higher air supply pressures is needed.

# APPENDIX A
# **REFERENCES**


Bamberger, J. A. 2000. *An Assessment of Technologies to Provide Extended Sludge Retrieval from Underground Storage Tanks at the Hanford Site.* PNNL-13048. Richland, Wash.: Pacific Northwest National Laboratory.

DOE (U.S. Department of Energy) 1999a. *AEA Fluidic Pulse Jet Mixer*. DOE/EM-0447. Germantown, Md.: U.S. Department of Energy, Office of Science and Technology.

DOE 1999b. *Pulsed-Air Mixer.* August 1999b. DOE/EM-0462. Germantown, Md.: U.S. Department of Energy, Office of Science and Technology.

Enderlin, C. W., O. D. Mullen, and G. Terrones. 1997. *Performance Evaluation of the Quarter-Scale Russian Retrieval Equipment for the Removal of Hazardous Waste.* PNNL-11740. Richland, Wash.: Pacific Northwest National Laboratory.

Hall, M. N. 1996. *Life-Cycle Cost Analysis of the Advanced Design Mixer Pump.* WHC-SD-WM-CBA-001. Richland, Wash.: Westinghouse Hanford Company.

Hatchell, B., B. E. Lewis*, J. D. Randolph*, and M. Johnson* (*Oak Ridge National Laboratory). 2001. *Russian Pulsating Mixer Pump Deployment in the Gunite and Associated Tanks at ORNL.* PNNL-SA-34056. Richland, Wash.: Pacific Northwest National Laboratory.

Lewis, B. E., and J. D. Randolph. 2001. *Cold Testing of a Russian Pulsating Mixer Pump at the Oak Ridge National Laboratory.* ORNL/TM-2001/141. Oak Ridge, Tenn.: Oak Ridge National Laboratory.

ORNL (Oak Ridge National Laboratory). 1999. *Functions and Requirements for Russian PMP Deployment in the Gunite and Associated Tanks at Oak Ridge National Laboratory.* ORNL/X-OE-820. Oak Ridge, Tenn.: Oak Ridge National Laboratory.

# APPENDIX B
# **ACRONYMS**

| | |
|---|---|
| CERCLA | Comprehensive Environmental Response, Compensation, and Liability Act |
| psi | pounds per square inch |