Section 1 of 2

Document Information			
Document #	SD-SNF-DR-003	**Revision**	2
Title	MCO DESIGN REPORT		
Date	2/18/99		
Originator	SMITH KE	**Originator Co.**	DESH
Recipient		**Recipient Co.**	
References	ECN-648630,HNF-S-0426		
Keywords			
Projects	W-442		
Other Information			

ENGINEERING CHANGE NOTICE

Page 1 of 2

1. ECN 648630

Proj. ECN S

2. ECN Category (mark one) Supplemental [] Direct Revision [X] Change ECN [] Temporary [] Standby [] Supersedure [] Cancel/Void []	3. Originator's Name, Organization, MSIN, and Telephone No. K.E. Smith, SNF Storage Projects, R3-86, 376-0273	4. USQ Required? [] Yes [X] No	5. Date 02/11/99
	6. Project Title/No./Work Order No. Multi-Canister Overpack, W-442	7. Bldg./Sys./Fac. No. 212H	8. Approval Designator S^NQD
	9. Document Numbers Changed by this ECN (includes sheet no. and rev.) HNF-SD-SNF-DR-003, REV 1	10. Related ECN No(s). 645028, 645987, 648627	11. Related PO No. N/A

12a. Modification Work [] Yes (fill out Blk. 12b) [X] No (NA Blks. 12b, 12c, 12d)	12b. Work Package No. N/A	12c. Modification Work Complete N/A Design Authority/Cog. Engineer Signature & Date	12d. Restored to Original Condition (Temp. or Standby ECN only) N/A Design Authority/Cog. Engineer Signature & Date

13a. Description of Change

13b. Design Baseline Document? [X] Yes [] No

General Revision to redesign the MCO and MCO Baskets per Rev 5 of the Performance Specification HNF-S-0426

14a. Justification (mark one)

Criteria Change [X]	Design Improvement [X]	Environmental []	Facility Deactivation []
As-Found []	Facilitate Const []	Const. Error/Omission []	Design Error/Omission []

14b. Justification Details

REVISION 5 OF PERFORMANCE SPECIFICATION HNF-S-0426

Design verification was performed via Independent Review per HNF-PRO-445

15. Distribution (include name, MSIN, and no. of copies)

SEE DISTRIBUTION COVER SHEET

RELEASE STAMP

DATE: FEB 18 1999

STA: 4

HANFORD RELEASE

ID: 2

ENGINEERING CHANGE NOTICE	Page 2of 2	1. ECN (use no. from pg. 1) 648630

16. Design Verification Required	17. Cost Impact ENGINEERING			CONSTRUCTION			18. Schedule Impact (days)		
[x] Yes	Additional	[]	N/A	Additional	[]	N/A	Improvement	[]	N/A
[] No	Savings	[]		Savings	[]		Delay	[]	N/A

19. Change Impact Review: Indicate the related documents (other than the engineering documents identified on Side 1) that will be affected by the change described in Block 13. Enter the affected document number in Block 20.

SDD/DD []
Functional Design Criteria []
Operating Specification []
Criticality Specification []
Conceptual Design Report []
Equipment Spec. []
Const. Spec. [X]
Procurement Spec. []
Vendor Information []
OM Manual []
FSAR/SAR [X]
Safety Equipment List []
Radiation Work Permit []
Environmental Impact Statement []
Environmental Report []
Environmental Permit []

Seismic/Stress Analysis []
Stress/Design Report []
Interface Control Drawing []
Calibration Procedure []
Installation Procedure []
Maintenance Procedure []
Engineering Procedure []
Operating Instruction []
Operating Procedure []
Operational Safety Requirement []
IEFD Drawing []
Cell Arrangement Drawing []
Essential Material Specification []
Fac. Proc. Samp. Schedule []
Inspection Plan []
Inventory Adjustment Request []

Tank Calibration Manual []
Health Physics Procedure []
Spares Multiple Unit Listing []
Test Procedures/Specification []
Component Index []
ASME Coded Item []
Human Factor Consideration []
Computer Software []
Electric Circuit Schedule []
ICRS Procedure []
Process Control Manual/Plan []
Process Flow Chart []
Purchase Requisition []
Tickler File []
[]
[]

20. Other Affected Documents: (NOTE: Documents listed below will not be revised by this ECN.) Signatures below indicate that the signing organization has been notified of other affected documents listed below.

Document Number/Revision	Document Number/Revision	Document Number Revision
MCO TOPICAL REPORT HNF-SD-SNF-SARR005, REV ~~1~~0 KES 2/18/99 MCO FABRICATION SPECIFICATION HNF-S-0453, REV 2 ALL		

21. Approvals

	Signature	Date		Signature	Date
Design Authority L. H. Goldmann		2/12/99	Design Agent J. Tanke	J Tanke KES for per telecon	~~2-11-99~~ 2-12-99
Cog. Eng. K. E. Smith	KE Smith	2/12/99	PE N/A		
Cog. Mgr. J. D. Cloud		2/12/99	QA N/A		
QA C. R. Hoover		2/12/99	Safety N/A		
Safety B.D. Lorenz	BD Lorenz	2/12/99	Design N/A		
Environ.N/A			Environ. N/A		
Other None			Other N/A		

DEPARTMENT OF ENERGY

Signature or a Control Number that tracks the Approval Signature
CB. Loftis Charles B. Loftis 2-12-99

ADDITIONAL MCO will comply with section III Div. 1, of ASME code

CORRESPONDENCE DISTRIBUTION COVERSHEET

Author	Addressee	Correspondence No.
K. E. Smith February 12, 1999		

Subject: MCO DESIGN REPORT DISTRIBUTION LIST

INTERNAL DISTRIBUTION

Approval	Date	Name	Location	w/att
		Correspondence Control	A3-01	
		<u>Spent Nuclear Fuel Project</u>		
		W. C. Alaconis	R3-86	
		G. D. Bazinet	S8-06	
		G. E. Bishop	S7-41	
		D. M. Chenault	R3-86	
		J. D. Cloud	R3-86	
		DP. Devine	T2-10	
		J. R. Fredrickson	R3-86	
		L. J. Garvin	R3-26	
		L. H. Goldmann	R3-86	
		C.R. Hoover	R3-86	
		J.J. Irwin	R3-86	
		C. B. Loftis	S7-41	
		B. D. Lorenz	R3-26	
		L. J. McKenzie	X3-86	
		S. R. Pierce	R3-86	
		K. E. Smith	R3-86	
		C.A. Thompson	X3-72	
		SNF Project Files	R3-11	

Multi-Canister Overpack Design Report

K. E. Smith
DE&S Hanford, Inc., Richland, WA 99352

U.S. Department of Energy Contract DE-AC06-96RL13200

EDT/ECN: ECN 648630 UC: 600
Org Code: 2T340 Charge Code: 105532/AA30
B&R Code: EW7040000 Total Pages: 787

Key Words: Spent Fuel, Canister, Packaging, Container

Abstract: Revision 2 incorporates changes to reflect a 150 psig pressure rating for the mechanically closed MCO and 450 psig pressure rating with the cover cap welded in place, per the MCO Performance Specification, HNF-S-0426, Rev. 5.

*Windows 95, Windows NT, Excel, and MS-DOS are registered trademarks of Microsoft Corporation.

Printed in the United States of America. To obtain copies of this document, contact: Document Control Services, P.O. Box 950, Mailstop H6-08, Richland WA 99352, Phone (509) 372-2420; Fax (509) 376-4989.

2/12/99
Release Approval Date

DATE: HANFORD RELEASE
STA: 4 ID: 2
FEB 18 1999
Release Stamp

Approved for Public Release

RECORD OF REVISION

(1) Document Number
HNF-SD-SNF-DR-003

Page 1

(2) Title
Multi-Canister Overpack Design Report

CHANGE CONTROL RECORD

(3) Revision	(4) Description of Change - Replace, Add, and Delete Pages	Authorized for Release	
		(5) Cog. Engr.	(6) Cog. Mgr. Date
0	(7) EDT 620106	KE Smith	RW Rasmussen
0A	Replaced pages per ECN 645028	KE Smith	RW Rasmussen
0B	Added supplement to Appendix 18 per ECN 645053	KE Smith	RW Rasmussen
0C	Replaced Appendix 7 per ECN 645987	KE Smith	JD Cloud
1	Full scale revision per ECN 648627	KE Smith	JD Cloud
RS 2	Full scale revision per ECN 648630	KE Smith KE Smith	JD Cloud 2-12-99

MULTI-CANISTER OVERPACK DESIGN REPORT

Prepared for DE&S Hanford, Inc.

Document No. HNF-SD-SNF-DR-003, Revision 2

February 1999

DOCUMENT REVISION	AFFECTED PAGES	REVISION DESCRIPTION	DATE OF REVISION	REVISION CHECKED BY	REVISION APPROVED BY
0	All	Initial Issue	May 1997	C.Temus	R. Bastar
1	All, Appendices 1-11 and 19	Revised to include a pressure increase from 150 psi to 450 psi and revised scrap basket design.	July 1998	C.Temus	J. Tanke
2	All, Appendices 1 – 11, 13, 14, 18 and 19	Redesign of MCO and baskets for fabrication, per Revision 5 of the Performance Specification.	February 1999	C Temus 2/11/99	J.C. Tanke 2-11-99

TABLE OF CONTENTS

1.0 INTRODUCTION

The Multi-Canister Overpack (MCO) is a storage/process vessel which will be used to stabilize and store the spent fuel currently stored in the Hanford K Basins. The spent fuel will be placed in one of five fuel basket designs which will be stacked inside the MCO. The fuel stabilization process will include: 1) fuel basket stacking within the MCO, 2) transporting of the fuel inside the MCO to an initial processing facility, 3) cold vacuum drying of the fuel within the MCO, and 4) transporting of the MCO/fuel to the Canister Storage Building (CSB) where the MCOs will be placed inside storage tubes for storage of up to 75 years.

This design report is limited to the features and functions of the MCO and fuel handling/storage baskets relative to the requirements set forth in the Performance Specification for the Spent Nuclear Fuel Multi-Canister Overpack (HNF-S-0426) Reference 6.1, Rev. 5 . The final design is a modification of a preliminary design supplied with the Performance Specification by the buyer Duke Engineering Services Hanford, Inc. Per the Statement of Work, no changes were made to the preliminary design unless required to meet either the specification requirements or as requested by the buyer in the form of a revised Performance Specification.

The Performance Specification limits the evaluation to shielding, structural, and some functional considerations. Criticality, thermal/fluid and interface considerations were not part of the evaluation; however, features were included in the design to accommodate evaluations performed by the buyer and indicated in the Performance Specification. Components such as filters, lifting interfaces, process interfaces, etc., are the responsibility of the buyer.

The MCO is designed to Section III of the ASME Boiler and Pressure Vessel Code as designated within the Performance Specification. The pressure boundary is designed to Subsection NB of the ASME Code Reference 6.2. The formal application of the Code to the containment portion of the MCO is to be by the issuance of a Certified ASME Design Specification that is to cover a subset of the requirements of the Performance Specification. The ASME Certified Design Specification and its related Over Pressure Requirements Report have not been completed, and no evaluations based on these documents were performed against the Code requirements. The N certificate holder (fabricator), responsible for issuing the ASME Design Report will review the Design Specification and Over Pressure Protection Report to ensure Code compliance to those requirements. Some load cases are specifically exempted from meeting the Code requirements by the Performance Specification. The design was evaluated against the Code and has been found to be compliant using the principles and rules as set forth in the Code as shown in the attached Appendices. Interpretations of the Performance Specification, interfaces, and the application of the loads are stated in the Appendices. The final closure weld attaching the cover cap addresses the Code requirements by the use of Code Case N-595 which invokes appropriate stress reduction factors. This Code Case requires that the final closure weld be liquid penetrant inspected at the root and each ¼ inch of weld material including the cover pass to allow use of a stress reduction factor of 0.9 and be helium leak tested. It also requires that the Certified Design Specification containing the Overpressure Protection Report shows that the Service Limits specified in the Design Specification will not be exceeded and hence no pressure relief is required or will be permitted during storage. The redundant cover over the test plug in the cover cap is not considered part of the pressure boundary and is not evaluated or designed to the Code. However, using the same Code Case with the same conditions it is permitted to be a pressure retaining weld, if it is inspected like the closure weld and the appropriate stress reduction factors are used. The Code Case does not require it to be leak tested. The weld used for the installation of the rupture disk may also require further clarification if the vessel is to be certified to the Code. A number of other features including the Mark IV baskets are exempt from Code criteria per the Performance Specification. For example, the Performance Specification does not apply Code criteria to components that are not required for criticality or containment safety. Where geometry control is required for criticality safety, the Performance Specification stipulates that portions of Section III, Subsection NG (Reference 6.3) are to be applied. The design of the Mark 1A baskets meet those requirements.

2.0 DESCRIPTION OF SYSTEM

2.1 GENERAL

The MCO is designed to facilitate the removal, processing and storage of the spent nuclear fuel currently stored in the East and West K-Basins. The MCO is a stainless steel canister approximately 24 inches in diameter and 166 inches long with cover cap installed. The shell and the collar which is welded to the shell are fabricated from 304/304L dual certified stainless steel for the shell and F304/F304L dual certified for the collar. The shell has a nominal thickness of ½ inch. The top closure consists of a shield plug with four processing ports and a locking ring with jacking bolts to pre-load a metal seal under the shield plug.

The fuel is placed in one of four types of baskets in the fuel retention basin. Each basket is then loaded into the MCO which is inside the transfer cask. Once all of the baskets are loaded into the MCO, the shield plug with a process tube is placed into the open end of the MCO. This shield plug provides shielding for workers when the transfer cask, containing the MCO, is lifted from the pool. After being removed from the pool, the locking ring is installed and the jacking bolts are tightened to pre-load the metal main closure seal. The cask is then sealed and the MCO taken to the Cold Vacuum Drying (CVD) facility for bulk water removal and vacuum drying through the process ports. Covers for the process ports may be installed or removed as needed per operating procedures. The MCO is then transferred to the Canister Storage Building (CSB), in the closed transfer cask. At the CSB, the MCO is then removed from the cask and becomes one of two MCOs stacked in a storage tube. MCOs will have a cover cap welded over the shield plug providing a complete welded closure. A number of MCOs may be stored with just the mechanical seal to allow monitoring of the MCO pressure, temperature, and gas composition.

Details of all the MCO components including baskets can be found on the drawings in Appendix 1.

2.2 INTERFACES

The MCO as described above must interface with many exterior components and environments including "hands-on" for all operations. These include:

A. Transfer Cask
B. Mark 1A Storage Basket
C. Mark 1A Scrap Basket
D. Mark IV Storage Basket
E. Mark IV Scrap Basket
F. Single Pass Reactor Fuel Basket
G. Fuel Basket Lifting Grapple
H. Cold Vacuum Drying System
I. Remote operators for Process Ports/valves with the cap off
J. Remote operators for Process Ports/valves with the cap on
K. Remote operators for Process Port covers
L. Locking & Lifting Ring installation/jacking bolts tightening equipment
M. Transfer equipment at CSB
N. CSB storage tubes
O. MCO Handling Machine
P. Closure Cap installation equipment
Q. Non-destructive examination processes for the closure welds
S. Leak rate testing equipment
T. Repair equipment

The design insures proper interface with the above components by compliance with the Performance Specification and the interface drawing provided by the Buyer (SK-1-80096).

2.3 MCO SHELL

The MCO shell provides both confinement and containment of the fuel during both handling and storage. It also provides support for the shield plug and the baskets for stacking, lifting and handling including the postulated drops. The shell is constructed out of 304L/304 dual certified stainless steel. The main section of the shell is fabricated from 24 inch schedule 80S, SA-312 304L/304 dual certified pipe or rolled SA-240 304L/304 dual certified plate. The bottom of the shell is a SA-182 F304L machined forging or may be machined from SA-240 304L plate The top of the shell, the MCO Collar, is a SA-182 F304L/F304 (dual certified) forging, machined with a double lead buttress thread and a seal surface for the primary seal and shield plug to rest, completing the containment boundary.

2.4 COVER CAP

The cover cap is a SA-182 304L forging that is placed on top of the MCO at the CSB after the completion of Cold Vacuum Drying. The purpose of the cover cap is to provide a welded closure that is capable of meeting the containment leakage rate criteria. The closure weld is a full penetration weld just below the top of the locking ring on the collar of the MCO shell. This weld is a field weld that cannot be radiograpically inspected due to the configuration and contents of the MCO. However, it is configured to allow for ultrasonic inspection and it can be Helium leak tested. The weld will be qualified by the use of Code Case N-595 which only requires liquid penetrant inspection. The exterior of the cover cap is machined to have the same lifting rim configuration as the locking ring so that the MCOs can be handled after installation of the cover cap. The cover cap has one mechanically sealed penetration that can be aligned over either Port 1 or Port 2 on the shield plug, to permit operation of that shield plug port through the cover cap after its installation. The penetration is a plug with a mechanical seal that will allow venting of the cover cap, sampling of the atmosphere within the cover cap, as well as access for operation of the selected shield plug ports. The penetration has the capabilities to be seal welded shut, prior to welding the cover cap in place. Its orientation to allow operation of either port #1or #2, will be predetermined. To assure proper orientation, alignment marks will be used and or a fixture employed that holds the orientation correct while the cover is welded in place. Once the correct orientation is determined the cover plates will be checked to ensure that the correct cover plates are either in place or removed to allow for operation through the cover cap as described above. The shield plug cover plates provide a redundant closure for protection. They are designed to 150 psig like the mechanical seal.

2.5 SHIELD PLUG

The shield plug is a multi-functional component of the MCO. It provides a mechanical confinement and containment boundary until the cover cap is welded in place. It also provides for axial shielding to allow personnel access to the top of the MCO for securing the mechanical closure as well as performing the drying and processing functions. The shield plug also retains the main seal which seals against the MCO collar and the shield plug. The shield plug has four ports which connect to four penetrations. The first and second penetrations connect to an internal HEPA filter bank that allows for filtered release of gases from the MCO, either through one of the process ports during vacuum drying or through a backup port which is normally plugged. Both of these ports can be operated either by an external tool or an internal socket through the properly aligned cover cap. The guard plate assembly also protects a short process tube, connected to the fourth port, that serves as backup process port as well as a pressure relief port. Additionally, the guard plate assembly traps air when the shield plug is lowered into the pool and keeps the filter bank dry. The third penetration connects to the long process tube which reaches to the bottom of the MCO aiding in the removal of water during the dewatering and drying process.

The shield plug and guard plate assembly also mates with the fuel baskets to provide top stability. The coupling area of the fuel or scrap baskets to the shield plug assembly minimizes potential migration of fuel rubble inside the center exclusion cavity. This improves criticality safety. The machined ports in the shield plug act as valve bodies for the process plugs and any relief devices. Each of these ports can be covered with cover plates that either have orifices in them to control the pressure relief flow rate or are blank to allow sealing of the MCO as needed. Three of the shield plug port covers are identical, having four closure bolts. The port connecting to the long process tube maintains a five bolt cover plate for ease of identification. This insures proper connections during processing.

2.6 SHIELD PLUG PORTS

The four shield plug ports, as described above, serve different and unique functions for the handling, processing and safety in the storing of the spent fuel. Three of these ports have a unique process plug in them. This process plug is a hollow cross-drilled, threaded, plug that seals when fully engaged and allows flow when the plug is disengaged by unthreading approximately twelve turns. Sealing properties are possible due to a metal C-seal that has the capability of resealing over five times when the plug is tightened into place. The seals are made from a structural hard metal (such as Inconel) which is plated with a soft metal such as silver or gold. The seals and the qualification testing for re-sealing capability are described in Appendix 14. The port connecting to the short draw tube retains a process plug containing a rupture disk. This allows the port to serve as a backup process port as well as a primary over pressure protection port. The rupture disk is designed to rupture at a pressure of 150 psig (which is at the design pressure of the main mechanical seal and below the MCO shell design pressure) at the MCO design temperature of 132°C.

Port number 1 is a spare port, and contains a threaded plug with a socket head and an external hex head. This permits the plug to be operated with the cover cap either off or on when the cover cap penetration aligns with this port. This plug uses the same metal seal used on the process plugs, thus allowing it to maintain a repeatable leak-tight seal. As described above, this port is connected to an internal HEPA filter bank through a one inch diameter passage way.

Port 2 connects to a one inch diameter penetration that leads to the internal HEPA filter bank. The process valve for this port has both a external hex head and an internal socket head that permits the valve to be operated with the cover cap off or on when the cover cap penetration aligns with this port instead of Port 1. The decision of which port will be aligned will be made by the operating entity of the facility prior to the field installation of the cover cap.

Port 3 has a process plug and is connected with the long process tube, located at the center of the shield plug, through a 0.609-inch passageway. The cover plate for this port, as indicated earlier, uses five bolts as opposed to four. This configuration ensures proper placement and application of the process and operator tools.

Port 4 connects to the short process tube through a one inch diameter penetration. The process plug in this port has one 1 inch ASME certified rupture disk built into the upper portion of the valve nut, distinguishing it from the other process plugs. This particular process plug is composed of two pieces. The upper component forms the valve nut and discharge vents. The lower component forms the threaded valve body with process flow holes. The rupture disk is welded to the bottom of the upper half component. The upper half component is then welded to the lower half component, sandwiching the rupture disk in between the two. Incorporating this geometry, the rupture disk is replaceable by replacing the process plug. This particular port has the option of two different cover plates. The first cover plate contains a 1 inch orifice. This allows proper two phase relief of the MCO in the event of over pressurization while full of water, and still provides protection to the process plug from overhead strikes. The second plate is a blind flange identical to the plates covering the remaining process ports. The connection to this port has a 2 mm screen covering it to prevent the discharge of particles should the rupture disk rupture.

All cover plates have captured bolts which allow for remote removal and installation of the covers. The cover plates use a metal C-seal that requires a relatively low sealing pressure.The seal has the capability to "snap" on to the cover plates by being slightly oval thus facilitating remote removal and installation . The metal seal that is used for the process plugs is an Inconel C-seal with a silver or gold plating, produced by EG&G pressure seals. This plating allows the seal to produce a repeatable seal at the high temperature specified (132°C) and still meet the reseal requirements.

2.7 SEAL

The primary seal for the MCO provides a seal between the shell and the shield plug. This seal is manufactured by Helicoflex and is comprised of a high strength alloy spring covered with a 300 series stainless steel inner jacket and a silver outer jacket. The seal is held in place with four stainless steel clips that are screwed to the shield plug. This seal, when properly preloaded, will maintain a leak tight condition. The seal is similar to the standard mechanical seals approved by the Nuclear Regulatory Commission (NRC) for dry fuel storage applications.

2.8 LOCKING RING

The pre-load on the seal is maintained by the use of a locking ring and jacking bolt arrangement. The locking ring is a stainless steel forging with buttress threads. This allows the locking ring to be threaded into the MCO collar, after the shield plug is in place and the MCO is removed from the pool. This ring serves two functions. It provides a grapple interface for handling the MCO and it provides support for the jacking bolts that pre-load the shield plug and the seal. Eighteen SA-193 B8S or B8SA 1-½ inch set screws are threaded into the locking ring. The screws serve as jacking bolts to pre-load the seal and were sized to maintain the appropriate pre-load throughout the operating temperature range to maintain the seal for the 150 psig design pressure for the seal. The mechanical seal is not required to be maintained for the 450 psig pressure. At higher pressures or temperatures than what the seal is evaluated for, loss of preload resulting in loss of seal capability could occur. This may be either plastic or elastic deformation. See Appendix 4 for details.

2.9 MARK 1A STORAGE BASKET

The Mark 1A storage basket is designed to hold 48 intact Mark 1A fuel assemblies. The fuel assemblies, when fabricated, had the dimensions shown in Table 1. The Mark 1A fuel differs from the Mark IV fuel in that it is shorter and smaller in diameter. The fuel is more reactive which imposes criticality control requirements on the Mark 1A basket. The controlling item is the need to maintain an exclusion zone within two inches of center. The exclusion zone is defined by the 6.625-inch outer diameter with a 1.75-inch inner diameter of the center bar.

The basket consists of a center 6.625-inch bar with a 1.75-inch center diameter bore, providing the exclusion zone, threaded to a bottom support plate that also has six support rods at its periphery. The center post and six support rods are perpendicular to the bottom support plate, and make up the main structural members of the basket. The basket also has a sheet metal shroud enveloping the six support rods and a fuel rack. The fuel rack rests in the bottom of the basket to help position the fuel during loading. The fuel rack has 48 holes to receive and maintain the fuel in a vertical array. Between the bottom plate and the fuel rack is a layer of expanded aluminum to keep the fuel from resting directly on the plate. The expanded metal layer prevents gas flow blockage through the 1/2-inch diameter holes in the bottom support plate and allows for water draining. Neither the expanded metal nor the fuel rack are connected to the support plate. This is done to minimize the inertia loading to the bottom plate during the side drop accident conditions. The six support rods on the periphery of the plate have a trapezoidal cross section and the lengths are sized such that they share the load with the center tube during axial loading. This load distribution ensures that the bottom plate is not deformed significantly and will still maintain the center post's position during a horizontal drop following a vertical drop. All of the structural members of the Mark 1A basket are designed to meet ASME Section III, Subsection NG. NG-3000 requirements, supplemented by criticality control deformation limits delineated in the Performance Specification (see Appendix 7 for more details). As can be seen in the Appendix 1 drawings, the top of the center pipe has an end piece that extends into the basket above, or into the centering device on the guard plate on the shield plug assembly. This allows the center pipe to be supported at both ends during the side drop loading. Mating parts are sized such that fuel fines are restricted from entering the center of the bar. The top end piece also interfaces with a lifting grapple. The basket is lifted by a grapple that seats in an internal groove. The load path during basket lifting through the center pipe and bottom plate complies with Performance Specification requirements for safety factors of three on material yield and five on material failure.

All structural portions of the Mark 1A storage basket are fabricated from 304L or 304 austenitic stainless steel. The center post is connected to the bottom plate by a ACME stub thread and the support rods are fastened to the bottom plate using ½ inch countersunk socket head screws.

Table 1. Fuel Dimensions (Reference 6.4)

	Mark IV	Mark 1A
Length cm (in) Max	66.3 (26.1)	53.1 (20.91)
Diameter cm (in)	6.15 (2.42)	6.10 (2.40)

2.10 MARK 1A SCRAP BASKET

The Mark 1A scrap basket is similar in design to the Mark 1A storage basket. All of the structural components are identical. The same requirements for criticality control and ASME Code application apply. The major difference is that there is no aluminum fuel rack, and a stainless steel screen replaces the expanded metal on the support plate. Additionally, six segments separate the basket cavity into six separate compartments plus a fines compartment in the center. The six segments are constructed of copper to improve the heat transfer and distribution characteristics of the basket. The individual compartments aid in the loading and arrangement of the damaged fuel. The six copper segments are fastened to the stainless steel bottom plate through the use of self-tapping screws. The screws are sized to withstand the specified minimum failure load in the Performance Specification. To ensure adequate gas flow through the basket there are flow restricters on the exterior of the shroud to divert gas flow through the holes in the bottom plate. The lifting of the scrap basket is by the same means as the storage basket and complies with the Performance Specification requirements.

2.11 MARK IV STORAGE BASKET

The Mark IV storage basket is designed to hold up to 54 intact Mark IV fuel assemblies. Unlike the Mark 1A basket, the Mark IV basket has no deformation limits for criticality control and hence has no requirements except for self support and meeting the lifting requirements of the Performance Specification. The design is similar to the Mark IA design, using a center post, divider plates, and peripheral support rods. The center post, a 2.84-inch diameter tube secured to the bottom plate by a threaded connection, carries the load during lifting operation. The bottom plate has holes drilled in it to allow gas flow during drying operations. The bottom plate configuration is similar to that of the Mark 1A design. It consists of a bottom plate covered by a piece of expanded aluminum on which the aluminum fuel rack rests. The basket above is supported by the center tube and six 1.313-inch diameter support rods at the periphery. The support rods are connected to the plate in a manner similar to that of the Mark 1A. The basket also has a 11-inch high non-structural sheet metal shroud to help in handling the fuel. The entire structural basket is made from 304L or 304 stainless steel.

Like the Mark 1A baskets, the Mark IV basket is lifted from a groove on the interior of the center tube. The center tube extends above the support rods and into the basket above. This coupling aids in the basket stability and facilitates the insertion of the process tube down the center of the basket. ASME Code methodology and allowables for the material were used in the analysis for both the lifting the baskets and to support the others above it.

2.12 MARK IV SCRAP BASKET

The Mark IV scrap basket is designed to handle damaged Mark IV fuel. The Mark IV scrap basket is the same as the Mark IV storage basket but without the expanded metal and the fuel rack. The stainless shroud is replaced by the segmented copper compartments that are fastened to the stainless bottom plate with self-tapping screws. The Mark IV scrap basket is similar to the Mark IA scrap basket with the exception of the center post and peripheral support rods. The Mark IV basket uses a 2.84-inch center post as opposed to the six inch center post. Like the Mark IA, the top of the center post mates with the basket above or the shield plug assembly, assisting the 1.313-inch diameter rods in axial support. Additionally, the basket is lifted by the same means, a groove internal to the center tube. The Mark IV scrap basket is required to meet the same criteria as that of the Mark IV storage basket. The Mark IV basket designs do not require features or geometry maintenance for criticality control. Both the Mark1A and the Mark IV basket designs have the same lift criteria and will mate with the same lifting device.

2.13 SINGLE PASS REACTOR FUEL BASKET

The single pass reactor fuel is to be stored using the Mark 1A stainless steel basket structure with a fuel holding jig. The fuel holding jig has not been finalized so the exact features, including the weights, are to be determined (TBD). The basket has a design constraint that its total weight will be no greater than that of the Mark 1A baskets when loaded

3.0 REQUIREMENTS

This section establishes the essential requirements needed to define MCO performance, physical and quality characteristics, environmental conditions, and transportability. The italicized text below each requirement describes how the design complies.

3.1 DESIGN LIFE

The MCO shall maintain fuel elements and fuel fragments in a critically safe array throughout its design life of 40 years both before and after being subjected to the design basis accidents described in Section 1 of Reference 1. The MCO shall not knowingly have design features that would prevent its design life from being extended to a total of 75 years. Design life of the rupture disk shall be one year.
Refer to Section 4, Item 1.

The MCO structural components are constructed from austenitic stainless steel with high resistance to corrosion from all aspects of the environment the system is expected to see over the expected lifetime. The scrap baskets have their shroud and divider plates fabricated from *copper. There are no components making up the system that have any known mechanism that will cause the system not to sustain the required design lifetime. None of the design basis accidents described is known to prevent the MCO from completing the expected lifetime or extending it to 75 years. The nickel based rupture disk is compatible with the expected environment and has no known failure mechanism that would prevented it from being serviceable for a minimum of a year.*

3.2 SNF CONFINEMENT

The MCO shall confine its contents during all normal operations and after being subjected to the design basis accidents described in Section 4.19.2 of Reference 6.1. The MCO shall be designed to facilitate confinement while process connections are being made and in conjunction with process piping during process operations. This confinement requirement does not apply to a pressure relief discharge path during actuation of any MCO or CVD pressure relief device.
Refer to Section 4, Item 2.

The MCO is designed to confine its contents during all normal operation and during the design basis accidents described in Reference 6.1. The confinement is met by a 304L stainless steel shell that is closed with a mechanical seal between the shield plug and the shell. The vessel is designed to and is to be fabricated in accordance with the ASME Code Section III, Division 1, Subsection NB (Reference 6.2), as set forth in Reference 6.1. The process plugs are designed to couple with an operator tool, allowing them to be operated within a sealed environment and providing the requested confinement. See Appendix 1.

3.3 SNF CONTAINMENT

The MCO shall maintain its containment capabilities during and after being subjected to the design basis accidents described in Section 4.19.2 of Reference 6.1, except for the cask drops as noted in the same section. During Hanford on-site transportation, and process operations the total gaseous leakage across the MCO pressure boundary, including process connection seals but excluding controlled flow through any port, shall not exceed 1 x 10^{-5} scc/sec. This gaseous leakage rate is based on a clean seal and a clean sealing surface at the final mechanical closure boundary and associated process boundaries. The MCO, when sealed by welding at the CSB weld station, shall be capable of not exceeding a maximum total leak rate of 1 x 10^{-7} scc/sec.
Refer to Section 4, Item 3.

The containment is provided by the same shell and seal system described above. The port valves and rupture disk are designed to meet the 1 x10^{-5} *scc/sec requirements. To provide additional containment all ports are designed to have covers with metal seals. These seals are capable, as is the main seal, of meeting the 1x*10^{-5} *scc/sec criteria. The shell is designed and analyzed for the design basis to comply with Reference 6.2. The shell is not required to meet Reference 6.2 requirements when it is in the cask for the horizontal and corner drop loads. This is due to the cask being designed with a collar that provides a ring/point load to the shell. The shell being fabricated from material with high elongation has the potential of deforming without breaching over this feature but would have localized stresses above the allowables.*

During fabrication the shell is leak tested to 1x 10-7 scc/sec to verify its containment capability. The closure cap will be leak tested after installation. The closure weld is designed to be capable of being inspected ultrasonically. Qualification of this weld will be in accordance with Code Case N-595 which allows for liquid penetrant inspection only. The MCO could provide redundant seals with the port covers in place prior to the installation of the cover cap.

3.4 MAINTAINABILITY

The MCO shall be designed to minimize the need for preventative maintenance throughout its design life. The MCO shall be designed to allow removal/replacement of the rupture disk at the K Basins, CVD, and the CSB as needed.
Refer to Section 4, Item 4.

As can be seen in the detailed drawing in Appendix 1 and discussed in Appendix 2 the MCO exterior is designed entirely out of austenitic stainless steel, which provides for a maintenance free package during its expected lifetime for the expected environment. The process plugs, covers and rupture disk are designed for remote operation to facilitate maintenance on those components. The rupture disk can be removed and or replaced by replacing the rupture disk valve operator plug any time prior to the installation of the cover cap.

3.5 HUMAN FACTORS

The MCO components shall be designed to facilitate handling and assembly with the use of appropriate handling equipment. The MCO design shall also enable handling while wearing protective clothing used in radiation zones (e.g. coveralls, gloves, booties, mask, breathing apparatus, etc.).
Refer to Section 4, Item 5.

The MCO components can all be handled with remote equipment and by personnel in protective clothing. Small components such as seals and bolts are captured or fastened to the larger components that can be handled with the aid of hoists, cranes, etc. The MCO shell can be handled by threading in the locking ring and hoisting from the locking ring. The shield plug can be handled by attaching a lifting device to the bolts holes provided in the top section. The baskets can be handled by the lifting device provided by others. The cover plate seals are snapped into place by the used of elliptical seals. The main seal is held into place by small clips.

3.6 INTERCHANGEABILITY

To the maximum extent possible (design goal), MCO components with like functions shall be interchangeable (i.e., any set of like baskets can be loaded into any MCO shell, any MCO shield plug and locking ring can be used to close and seal any MCO shell, etc.).

The MCO shell, shield plug, lifting ring, cover cap, and the baskets shall have unique identification numbers for tracking and accountability purposes.

Refer to Section 4, Item 6.

All components are dimensioned as shown in Appendix 1 so that after welding and final machining they are all interchangeable. The drawings and the Fabrication Specification provide for the Buyer supplied numbering and marking system that allows for the required tracking and accountability.

3.7 ENVIRONMENTAL CONDITIONS

The MCO shall be capable of performing its mission while subjected to the environmental conditions listed in Table 3.1.
Refer to Section 4, Item 7.

The selection of materials in Appendix 2 and the applicable stress values used for the materials in the analyses performed in Appendices 4-12 insure that the MCO and the fuel baskets are fully functional for the environmental conditions stated above. All containment seals including the process plug seals are also selected for these conditions.

3.8 TRANSPORTABILITY

After fabrication, MCO components shall be transportable by highway from the fabricator facility to the location within the Hanford site where they will be warehoused until requested for the packaging and removal of SNF.
Refer to Section 4, Item 8.

The dimensions of the MCO parts, as shown in Appendix 1 permit transport from the fabricator facility to the warehouse site within Hanford. Suggested packaging of the components for highway transport is provided in the Fabrication Specification.

Table 3.1. External Environmental Conditions (as seen by MCO)

Parameter	Condition
Hanford Site:	
Temperature (Air)	Range: -33°C to 46°C (-27°F to 115°F) Rate of Increase: 14°C (26°F) in 20 minutes Rate of decrease: 13°C (24°F) in 1 hour
Relative Humidity	Range: 5 to 100% Rate of Change: Negligible
K Basin Storage Pool:	
Temperature (Water)	Current Range: 6°C to 38°C (43°F to100°F) Maximum Allowable: 38°C (100°F) [see 3.1.3.3 of Performance Specification]

pH	Current Range: KE: 5.5 to 7.5 KW: 5.5 to 7.5 Allowable Range: KE and KW: 5.0 to 9.5
Electrical Conductivity	Range: KE: Up to 5 µS/cm KW: Up to 2 µS/cm Note: µS/cm= micro Siemen per centimeter
Chloride Content	less than 1 ppm
Nitrate Content	less than 1 ppm
Sulfate Content	less than 1 ppm
Phosphate Content	less than 1 ppm
Fluoride Content	.25 ppm
Sodium Content	1 ppm
Calcium Content	2 ppm
Iron Content	1 ppm
Cold Vacuum Drying Facility:	
Temperature	10°C to 75°C (50°F to 167°F)
Transportation:	
Temperature	0°C to 75°C (32°F to 167°F)
CBS (Storage):	
Temperature (Tube)	10° to 132°C (50°F to 270°F)
Temperature Cycling	Refer to Chapter 4 of HNF-SD-TP-RTP-004, Rev. 0 (WHC 1996a)
Relative Humidity	Refer to Chapter 8 of HNF-SD-TP-RTP-004, Rev. 0 (WHC 1996a)

3.9 MCO DESIGN OVERVIEW

3.9.1 Code Requirements

The MCO shall be designed in accordance with Divisions 1, 11, 13, and 15 of DOE Order 6430.1A, General Design Criteria (DOE 1989). Safety Class (SC) and Safety Significant Components (SS), providing fuel containment, confinement, and criticality control, shall be constructed to meet the rules of ASME Boiler and Pressure Vessel Code, Section III, Rules for

Construction of Nuclear Power Plant Components, Subsection NB (ASME 1998) under the component safety group as guided by the NUREG/CR 3854, UCRL-53544, Fabrication Criteria for Shipping Containers. The Nuclear Regulatory Commission (NRC) positions in Regulatory Guides 1.84 and 1.85 on ASME Section III Code Cases shall be reviewed prior to using such Code Cases for safety class applications for the MCO. Use of additional applicable Section III Code Cases shall be approved by the Buyer. All deviation from Subsection NB shall be documented and justified, and approved by Buyer.
Refer to Section 4, Item 9.

The applicable sections of the ASME code are applied to the various components of the system as shown below. Safety Class (SC) and Safety Significant (SS) requires compliance with the principles and allowables of Section III, Subsection NB of the Code. General Service (GS) components require to be designed and fabricated to industrial codes according to HNF-PRO-097.

System/Component	Function	SSC Designation	Failure Consequences
MCO Components			
Shell	Contain/Protect SNF	SC	Release of radioactive contents which could exceed offsite exposure limits; loss of contingency protection against nuclear criticality accident
Shield Plug	Contain SNF, protect personnel	SC	Release of radioactive contents which could exceed offsite exposure limits
L&L Ring + Set Screws	Maintain pressure on main seal, allows for lift of loaded MCO	SC	Release of radioactive contents which could exceed offsite exposure limits
Cover Cap	Seal MCO	SC	Release of radioactive contents which could exceed offsite exposure limits
IA Baskets	Maintain MK IA SNF elements and scrap in a Critically Safe Configuration	SC	Loss of double-contingency protection against nuclear criticality accident
IV Baskets	Hold MK IV SNF elements and scrap	GS	No release consequences Mark IV fuel does not require criticality control features.
MK1A and IV Scrap Basket Copper Shroud Assembly	Hold scrap and dissipate heat generated internally within the basket	SS	No release consequences, copper is used for thermal conductivity, it is not a structural component on an assembled MCO
Rupture Disk	Protect MCO pressure boundary prior to storage	SC	Over pressurization of MCO resulting in an uncontrolled release which could exceed offsite exposure limits
Plug Valves	Process ports to accommodate gas flows in support of MCO processing	SS	Inability to process the MCO, release of radioactive materials into the environment which exceed exposure limits
Process Internal Filter	Maintain most radioactive	SS	Release of radioactive materials from

System/Component	Function	SSC Designation	Failure Consequences
	solid materials within the MCO		the MCO, pressure buildup within the MCO, loss of defense in depth protection for release of radioactive materials
Seals excluding Main Shield Plug Seal	Containment	SS	Possible contamination release
Long Process Tube	Bulk water removal, introduction of gases during processing, and reflooding, if necessary	SS	Inability to remove water from MCO, inability to introduce gases to process MCO, prevents processing which puts the MCO into a safe configuration
Short Process Tube	Possible SC water removal prior to shipping to CVD, connects to rupture disk as vent path, backup process exit	SS	Rupture disk failure to relieve internal MCO pressure, inability to remove water prior to shipping to CVD
Long Process Tube Screen	Keep particles > 2 mm in diameter in the MCO	SS	Particles larger than 2 mm may leave the MCO allowing for potential radioactivity and potential criticality problems in the process system.
Main Shield Plug Seal	Seals MCO shield plug to shell	SS	Release of radioactive materials from the MCO, pressure buildup within the MCO, loss of defense - depth protection for release of radioactive materials
Cover Plates	Provides leak tight seal	SS	Loss of redundant leak protection
Orifice Cover Plates	Regulate gas flow from MCO	SS	Valve with rupture disk becomes non-operational, causing possible release.
Cover/Orifice Plate Bolts	Maintain Seal Pressure	SS	Loss of double contingency protection against leakage and/or unregulated gas flow from MCO
Aluminum Fuel Racks	Provides positioning during initial loading	GS	Has no effect on safety
Guard Plate assembly on Shield Plug	Protects internal MCO process filter, short process tube and 2 mm screen	SC	Potential damage to filter, short process tube, and screen. Keep top basket center tube stable and centered.

The Sections of the ASME Code Section III Division 1, Subsection NB, Reference 6.2 and Subsection NG, Reference 6.3 are applied to the containment boundary and Mark 1A baskets, respectively. The containment boundary is an SC item, since its failure would result in a potential release. The Mark 1A baskets require SC consideration since the geometric control is required for criticality control. The MCO and the Mark 1A fuel baskets are designed to the technical requirements of the Code as set forth in the Performance Specification. If economically feasible the MCO vessel will be Code stamped. SS items are designed and fabricated to applicable sections of the ASME Code and as set by the Performance Specification. GS items such as the Mark IV baskets, are evaluated to the applicable conditions specified by the Performance Specification (lifting and handling).

3.9.2 MCO Design Criteria

The MCO design shall implement the following criteria:

- ASME Section III Code stamp fabricator required
- Design pressure for shell, bottom plate, and cover cap: 450 psig
- Design pressure for shield plug closure assembly: 150 psig;
- Design temperature: 132°C
- Processing operating pressure: full vacuum internal with 25 psig external pressure, at 75°C
- Processing operating pressure: full vacuum internal with 0 psig external pressure, up to 132°C
- Processing operating pressure: 75 psig internal with 0 psig external pressure up to 132°C
- The MCO assembly must be designed to accommodate 0.65 inch nominal differential thermal expansion, in the axial direction, between the basket stack and the MCO shell and maintain basket nesting and engagement of the top basket with the shield plug
- Maximum allowed radial temperature gradient between the outside of the MCO ½ inch thick shell and the center of the MCO shield plug of 100°C, and a design radial temperature difference within the MCO shell wall of 5°C

Refer to Section 4, Item 10-20.

The design pressure of 450 psig and a design temperature of 132 °C is used for evaluation of the MCO with the cover cap welded in place for all normal conditions and design basis conditions in Appendices 4-12. The design pressure of 150 psig and a design temperature of 132 °C is used for evaluation of the MCO without the cover cap welded in place for all normal conditions and design basis conditions in Appendices 4-12. Appendix 12 demonstrates the MCO's compliance with the applicable Code requirements for the conditions stated above. The mechanical seals used to seal the MCO under these conditions are metallic seals. Since these seals will not be leak tested immediately when installed, the manufacturer's recommendation of not reusing the seal must be adhered to. The seals will be tested at the Cold Vacuum Drying (CVD) facility after drying. An ASME design specification which is a subset of the performance specification will be issued permitting an ASME Section III, Subsection NB design report to be prepared allowing for the MCO containment boundary to be fabricated to and stamped in accordance with the ASME Section III, Code.

3.9.3 Maximum MCO Assembly Weight

The gross weight of MCO (including baskets) containing 288 Mark IA fuel assemblies should not exceed 16,082 lbs or 17,394 lbs flooded. These weights are based on a 288 Mark IA SNF assembly fuel load with a SNF weight of 11,343 lbs. The gross weight of a MCO containing 270 Mark IV fuel assemblies shall not exceed 19,242 lbs dry or 20,457 lbs flooded. This is based on a 270 Mark IV SNF assembly fuel load with a SNF weight of 15,050 lbs. Weights are listed in Appendix A. Weights as quoted are design goals and subject to changes as the design evolves.
Refer to Section 4, Item 21.

Detailed weight calculations for each component of the MCO are provided in Appendix 3. The summary of the expected weights shows that the nominal MCO, without cover, with Mark 1A fuel (MCO Condition 2 in Appendix 3), dry, weighs approximately 17,867 lbs. The nominal MCO flooded with Shield Plug, no cover cap or locking ring and with Mark 1A fuel (MCO Condition 3 in Appendix 3) weighs approximately 18,264 lbs. The MCO with the Mark IV fuel, dry (MCO condition 2 in Appendix 3) weighs approximately 19,691 lbs. The MCO with the Mark IV fuel, flooded (MCO Condition 3 in Appendix 3), weighs approximately 20,093 lbs. The above weights do not reflect the weight of the scrap baskets. The empty scrap baskets may weigh more than the storage baskets but the loaded weight of the scrap baskets will always be less than that of the storage basket.

3.9.4 Height of the MCO

The maximum height of the MCO shall not exceed 160 inches (without final cover cap) at a temperature of 25° C. This includes any connections or devices integral to the MCO in facilitating connections to external process equipment and in providing pressure relief. When the final cover cap is welded in place, the maximum height shall not exceed 167.3 inches.
Refer to Section 4, Item 22.

The maximum height of the MCO with the cover cap off is 160 inches. The maximum height of the MCO with the cover cap in place is less than 167.3 inches, as shown in Appendix 1.

3.9.5 Diameter of the MCO

The nominal outside diameter of the MCO is 24-inches. In no case, including post-accident conditions, is the MCO inside circumference below the bottom of the shield plug allowed to exceed 73.04 inches (23.25 inches * pi). The MCO shell is allowed to have a 25.31-inch maximum as-built OD above the 148-inch elevation measured from the MCO bottom. These dimensional limits are applicable during normal operations and post accident conditions.
Refer to Section 4, Item 23.

The inside circumference below the bottom of the shield plug is maintained to be less than 73.04 inches as shown in Appendix 5 and Appendix 11. These evaluations include the post-level D events as defined in the Performance Specification. The only event that has the potential of any significant distortion of the circumference of the shell is the side drop in the cask and is localized in the area of the collar in the cask. The distortion would be inward (localized denting) and hence the circumference requirement would not be violated.

3.10 MCO SHELL DESIGN

The MCO shell is a cylindrical vessel that provides access to its cavity through its top end and receives a shield plug at its top end for closing. The MCO shell has a bottom assembly that

provides a permanent sealed closure on the shell bottom end. The MCO bottom assembly is nominally flat and must include an internal liquid collection sump at the MCO centerline. The MCO must be designed with a 1.00-inch minimum distance between the inside of the MCO bottom assembly and the bottom of the lowest basket. The MCO must permit or allow loading and stacking of the fuel baskets within its cavity. The empty shell must be designed to load into and out of the transport cask.
Refer to Section 4, Item 16.

As shown in Appendix 1 the MCO shell assembly consists of a forged bottom closure with a low point in the center for facilitating the removal of water, a cylindrical 0.5- inch thick wall shell and a forging collar at the top that mates with the shield plug and locking ring. The top closure permits full access to the inside cavity for stacking of the fuel baskets. All welded components are made of 304L/304 dual certified stainless steel. At the bottom of the cavity, there are 6 basket support plates in the form of a spider supporting the bottom basket and maintaining a 1.00 inch minimum distance between the basket and the bottom head. The empty shell can be loaded into the cask by assembling the locking ring in place and grappling the lift ring on the locking ring similar to what is done in handling the loaded MCOs. The MCO may be up-righted with standard engineered lifting devices although a turning fixture may facilitate the operation. The MCO should not be handled or lifted without the lifting ring in place. The use of other fixtures to lift the MCO increases the potential of damaging and distorting the collar area so that insertion of the locking ring would be very difficult.

3.11 MCO CLOSURE DESIGN

The MCO shall be designed with a mechanical closure configuration. The closure shall rely on a mechanical crushable seal to maintain the containment and confinement requirement at the final closure interface. The closure system shall utilize the shield plug/shell interface as the closure boundary where the crushable seal shall be located. The shield plug shall be held in place via a locking ring threaded into the MCO shell. The locking ring shall contain screws that will be tightened to force the shield plug down against the crushable seal while pushing up on the locking ring.

The MCO shall be designed to incorporate a final welded closure cap over the shield plug. The cap shall be welded to the MCO shell, and the weld geometry shall permit a 100% ultrasonic examination of the weld. The cap shall be capable/configured for lifting the MCO with the same equipment described in Section 4.13 of the Performance Specification Reference 6.1. The cap shall be capable of withstanding the pressure rating of 450 psi at 132°C and shall meet the drop criteria for the drop into the CSB tubes per Table 3 of the Performance Specification. The closure cap shall be capable of being fitted with a recessed threaded plug to be used for helium leak testing after welding. This penetration in the cover cap shall be adequately sized and located to permit insertion of a tool to access the threaded plugs contained in Ports #1 or #2. The weld joining the closure cap to the MCO shell shall be helium leak tight to 1 x 10^{-7} scc/sec.
Refer to Section 4, Item 17.

The MCO closure consists of a shield plug, locking ring and main seal as shown in Appendix 1.

The shield plug assembly rests on a seal ledge on the inside of the MCO collar. The shield plug has a groove in the mating surface to this ledge which holds the main seal and prevents over crushing of the seal. The shield plug is held in place by the locking ring assembly which threads into the collar with a double lead buttress thread. Once the locking ring is installed the eighteen 1-½ inch diameter set screws are tightened, generating a force between the shield plug and the locking ring. The force seats the metal main seal and maintains a minimum sealing load on the seal during all loading conditions. The evaluation of the set screws and their required tightening is shown in Appendix 4. The locking ring is designed so that, with an 1/8-inch gap between its bottom surface and the shield plug, the top surface of the locking ring is 1/8-inch below the top surface of the shield plug. The main seal is a Helicoflex seal. The seal will be installed to the manufacture's recommendation and in a manner which has been verified to meet the leak tightness required. This will require that the seal can only be installed once and not reused. The seal will be helium leak tested at the CVD facility. The details of the seal can be found in Appendix 13.

The closure cap consists of a 304L stainless steel forging that mates with the MCO collar. The closure weld is a full thickness weld that is not radiographically examined. The weld can be ultrasonically examined. The weld can be helium leak tested to demonstrate helium leak tightness to $1x10^{-7}$*scc/sec. The recessed threaded plug has a metallic seal that allows leak testing of the final closure. After the plug is helium leak tested to* 1×10^{-7} *scc/sec it can be further sealed off by welding of a cover plate over the plug. The plug threads into a 1-3/4 inch opening that can be aligned over either Port 1 or Port 2. With opening aligned over either one these ports, the port may be operated through the opening. At the time the decision is made to which Port is to be operable through the cover cap, the cover plate for that Port will be removed and the cover cap will be aligned to allow operation through the cover cap by either alignment marks or by the use of fixture during the installation of the cover cap. Analysis of the weld and the lifting ring which is attached to the cover cap is found in Appendix 6. The lifting rim on the cover cap is the same diameter and thickness as the lifting ring on the locking ring. Analysis is performed combining the lifting loads with the 450 psig internal pressure at 132 ℃.*

3.12 FUEL BASKET DESIGN

3.12.1 Mark IA Baskets

The Mark IA fuel storage and scrap baskets shall meet the rules of Articles NG-2000, NG-3000, NG-4200, NG-4600, and NG-5000, as applicable, of the ASME Boiler and Pressure Vessel Code, Section III, Subsection NG (ASME 1998) under the component safety group as guided by the NUREG/CR 3854, UCRL-53544, Fabrication Criteria for Shipping Containers, 1984. (Explanation: Mark IA fuel has a higher U235 enrichment than Mark IV fuel. The Mark IA basket structural integrity is required for criticality control whereas basket structural integrity is not required for Mark IV fuel. Therefore, ASME Section III, Subsection NG requirements shall be applied to the construction of the Mark IA fuel storage and scrap baskets.)

The design shall meet Service Level A requirements for normal operating loads and Service Level D for accident conditions under ASME Boiler and Pressure Vessel Code, Section III, Subsection NG. During accident conditions the baskets designed for Mark IA fuel and Mark IA fuel fragments/scrap shall maintain the criticality control features defined in Section 4.19.3 of Reference 6.1.
Refer to Section 4, Item 18.

The Mark 1A baskets are designed to meet the applicable sections of ASME Boiler and Pressure Vessel Code, Section III, Subsection NG (ASME 1998), Reference 6.3. The evaluation of the baskets for the Service Level A and load conditions defined in the Performance Specification Reference 6.1 are found in Appendix 7. The combined requirement of sequential loading from the vertical and horizontal drop events is addressed by conforming to both the ASME Code, Service Level D requirements and the Performance Specification criticality requirements. This was necessary to ensure that the center tubes do not move more than two inches radially and that the basket axial deformations are small enough to prevent the baskets from becoming disconnected from one another permitting fuel particles to enter the center tube. No Code stamp is required for the application of the limited Subsection NG requirements applied by the Performance Specification.

3.12.2 Mark IV Baskets

For clarification, the Mark IV fuel storage and scrap baskets do not have to be designed to meet the ASME Code. (Explanation: Mark IV fuel has a lower U235 enrichment than Mark IA fuel. Analyses indicate that the Mark IV fuel in baskets cannot achieve criticality in an MCO under normal operating conditions or accident scenarios. It follows that basket structural integrity for Mark IV criticality control is not required as is the case for Mark IA fuel and scrap. Therefore, ASME Code, Section III, Subsection NG requirements are not required for the design or construction of the Mark IV fuel storage and scrap baskets.)
Refer to Section 4, Item 18.

For consistency with the Mark 1A structural evaluations, the Mark IV baskets were evaluated to ASME Code, Section III, Subsection N., Allowables are for the Level A service conditions. No Level D load cases were considered for the Mark IV baskets.

3.12.3 Mark IA and Mark IV Baskets

For the handling of both loaded and unloaded Mark IA and Mark IV baskets, the design shall meet the safety factors of 3 on material yield and 5 on material ultimate strength. (Design and qualification of the basket grapple interface will be performed by the Cask/Transportation subproject and will not be the responsibility of the MCO Design Agent). These safety factors apply from 5°C through 100°C.

Materials of construction for the Mark IV and Mark IA storage and scrap baskets shall be 304L stainless steel or a material having equal or greater corrosion resistance properties. Scrap baskets

materials shall include copper for thermal conductivity as described in Section 4.12.6 of Reference 6.1. All baskets will be annular open-top containers with a maximum OD of 22.625 inches at 25°C, with the exception of the flexible reed portion of the scrap basket flow restrictor. All baskets will be able to support the fuel at 1.0 g while at 132°C. The basket grapple interface for all baskets shall be a 1/8-inch deep by 1-inch long radial groove beginning 1-7/8-inches from the top end of the basket center tube. Basket sizing shall accommodate a ½-inch clearance between the top of the fuel elements and the bottom plate of the basket above.
Refer to Section 4, Item 18.

The structural material of construction for the baskets is specified to be 304L stainless steel. For the scrap baskets, copper is to be used for construction of the shrouds, and divider plates. Both the Mark 1A and the Mark IV baskets were evaluated for lifting in accordance with the requirements of the Performance Specification. The baskets were also evaluated for the ability to support the fuel and the baskets above at 132 °C. The evaluations can be found in Appendix 7 for the Mark 1A baskets, Appendix 8 for the Mark IV Storage basket and Appendix 9 for the Mark IV Scrap basket. The adequacy of the lifting groove per the Performance Specification is evaluated by the Buyer.

3.12.4 Summary of MCO Fuel Basket Types

The MCO fuel baskets are categorized into two major configurations: 1) intact fuel element baskets, and, 2) scrap fuel (fragment) baskets. Fuel baskets must also maintain criticality control for the higher enriched (Mark IA) fuel. These basic requirements lead to four different basket types as follows:

- Type (1) must have the ability to hold 48 Mark IA (higher enriched) intact fuel elements and must have a criticality control exclusion void, per Section 4.19.3 of Reference 6.1, built into the basket.
- Type (2) must have the ability to hold 54 Mark IV intact-fuel elements, and does not need the exclusion void.
- Type (3) will hold Mark IA (higher enriched) scrap fuel (fragments), and must have a criticality control exclusion void per Section 4.19.3 of Reference 6.1 built into the basket.
- Type (4) will hold Mark IV scrap fuel (fragments), and does not need the exclusion void.

Note: SPR fuel will be loaded into Mark IA baskets that have been modified to permit stacking and organization of the smaller diameter SPR fuel elements. Refer to Section 3.12.7.

Refer to Section 4, Item 18.

Appendix 1 shows that the Mark 1A storage basket can hold 48 Mark 1A intact-fuel elements and has the criticality exclusion void required. The Mark 1A basket modification to hold Single Pass Reactor fuel is TBD. The Mark IV storage basket has the ability to hold 54 Mark IV intact-fuel elements. The Mark 1A scrap basket has the same criticality exclusion void as the Mark 1A *storage basket. The Mark IV scrap basket can hold fuel fragments as required.*

3.12.5 Summary of MCO Fuel Basket Functions

All basket designs shall incorporate a center support tube for axial support during lifting and for protection for the long process tube.

All baskets have a center support tube for axial support during lifting and for process tube protection.

Each basket shall be capable of being loaded, in the upright position, by the Fuel Retrieval System equipment in the K Basin pool.

All baskets have the same open spacing and access defined in the preliminary design provided by Buyer.

The baskets must be stackable inside the MCO with the basket centerline coincident with the MCO centerline. While stacked inside the MCO, the baskets must provide for insertion of a long process tube down the MCO centerline for water draining and gas transport, as needed.

All baskets have the same stackable features that allow them to be stacked with the centering coincident and have internal guides to provide for insertion of the long process tube. As described in Appendix 1, the interfaces between baskets are such that the tube, once started, will not hang up during the insertion operation.

The loaded baskets shall be capable of being easily and safely handled in the basin water, reliably loaded and nested into the MCO/cask assembly in the K Basins load out pits, and engaged with the shield plug shield/guard plate (to be designed) and axial stabilizer. Basket design shall account for differential thermal expansion when subjected to processing temperatures inside the MCO.

The loaded baskets can be easily and safely handled in the basin water. Lead-ins and alignment mechanisms allow the baskets to be loaded and nested in the MCO in the K Basins. The shield plug assembly has an axial stabilizer that engages with the top basket and allows for a differential thermal expansion of a 100°C.

The baskets shall drain free and not capture or retain excessive water to accomplish the bulk water removal step by the CVD System.

The baskets are designed to drain freely and there are no cavities that will retain excessive water.

The baskets shall support heat transfer into and out of the fuel while in gaseous and vacuum environments inside the MCO. The primary heat transfer mode is radiation and conduction during the static (storage) state.

The baskets shall support gas flows needed to properly dry and condition intact fuel and scrap fuel during the vacuum drying process.

The baskets are designed with similar air flow capability as the Buyer supplied preliminary design. Review by the Buyer indicates acceptability to criteria not presented in the Performance Specification.

The baskets shall be compatible with the fuel and MCO containment materials during the expected temperatures, pressures, and atmospheres inside the MCO during handling, shipping, storage and processing.

The baskets are fabricated from austenitic stainless steel, aluminum, and copper, and are compatible with the MCO containment materials which are also fabricated from austenitic stainless steel. All major structural parts of both components are fabricated from 304L or 304 stainless steel. The scrap basket shroud subassembly is manufactured out of copper. The fuel racks spacers are fabricated out of aluminum.

The baskets shall maintain their structural integrity (with specified exceptions) during expected internal MCO environmental conditions, normal MCO handling situations, and after accidents (Mark IA storage and scrap baskets only). This structural integrity is required to maintain criticality safety of the MCO when loaded with Mark IA baskets.

As shown in Appendices 7-9 the baskets will maintain their structural integrity under environmental and normal handling conditions. Appendix 9 shows that the Mark 1A baskets will maintain the required structural integrity after the Design Basis Accident conditions specified in the Performance Specification. Reference 6.1.

The baskets shall be sufficiently strong to preserve the processing ability of the MCO for the bulk water removal, and vacuum drying during normal MCO handling, various internal MCO environments, and after MCO DBA loadings of Section 4.19.2 of Reference 6.1.

Appendix 7 shows that the Mark 1A baskets will retain their geometric configuration so that processing capabilities are not compromised during normal handling and after the Design Basis Accident Loadings specified. The Mark IV baskets which have no structural integrity code criteria per the Performance Specification Reference 6.1 maintains its processing capability by the use of a one inch XXS pipe for the long processing tube. The XXS processing tube design provides considerable resistance to crushing or shear which would reduce the processing capability.

The baskets shall not introduce any additional gas producing materials into the MCO which significantly increases the pressure of the MCO during storage.

The baskets are fabricated from metals that have no known gas producing mechanisms in the environments specified.

The baskets shall not introduce any materials that will appreciably accelerate corrosion of or significantly alter the properties of the MCO containment boundary.

The baskets and the MCO containment boundary is fabricated from austenitic stainless steel. The scrap baskets' components are fabricated out of austenitic stainless steel, with the exception of the six shroud segments, which are fabricated out of copper. The baskets will not accelerate the corrosion of or significantly alter the properties of the MCO containment. The Mark 1A and Mark IV storage baskets have non-structural aluminum fuel racks that are compatible with the fuel and MCO, as indicated in Appendix 2.

The baskets' bottom structural plate shall have a minimum weight not less than 50 lbs. (Note: Scrap baskets may include the weight of the gussets with the bottom plate to meet this requirement.)
As can be seen in Appendix 3 the bottom plates of the Mark 1A and the Mark IV baskets weigh more than 50 pounds.

3.12.6 Mark IA and Mark IV Scrap Baskets

In order to facilitate the safety basis for the Cold Vacuum Drying process, the scrap baskets shall be designed to remove the heat of radiolytic decay and fuel corrosion/oxidation during the drying process. Thermal analyses, performed by the Buyer, have determined this can be accomplished by providing the equivalent to a minimum 1/8-inch thick, full height copper shroud around the perimeter of the basket, with six equally spaced ¼-inch thick copper divider plates to segment the scrap into six equal area compartments. The six copper divider plates shall be thermally bonded to the outside copper shroud. Alternatively, this copper subassembly may be constructed by forming 1/8 inch thick copper plate into six pie-shaped segments and then thermally joining the segments together, both at the outside perimeter and along the top joints where two 1/8-inch thick plates meet to form a ¼-in thick divider between segments. Should a material other than copper be considered for thermal conductivity, it must be at least comparable to 1/8-inch thick copper of better when considering the material's thermal conductivity and thickness.

A partitioned area within the basket shall be designed for scrap fines loading. Scrap fines will vary in size from ¼-inch pieces to approximately 1-inch pieces. The total volume of the partitioned area shall not exceed 10% of the basket area. Material for the partition shall be the same as the other material selected for heat conductivity. The partitioned area for scrap fines must be thermally joined to the segmented plates and must be designed for water draining, gas flow through the container and thermal conductivity, consistent with other areas of the scrap basket. In addition, the partitioned area divider shall have perforations to permit gas flow through the partition wall.

The copper subassembly of the scrap basket shall be designed to withstand a distributed load in tension on the outside shroud of 10,350 pounds before yielding and 17,250 pounds before failure. This provides a safety factor of three to yield and five to failure during loading of the basket into the MCO.

Appendix 1 demonstrates that the scrap baskets meet the above requirements. The capacity of the screw attachments are demonstrated in Appendices 7 and 9.

3.12.7 MARK 1A BASKETS MODIFIED FOR SPR FUEL

The Mark IA fuel basket design shall be modified to permit loading of SPR fuel elements. SPR fuel elements to be loaded range in length from approximately 5 to 9 inches with an outside nominal diameter of 1.5 inches. Detailed information on the SPR fuel is contained in Table 4.2 of HNF-SD-SNF-TI-009.

A loading jig to be inserted in place of the Mark IA aluminum fuel rack shall be designed to permit stacking of SPR fuel elements, either 2 or 3 high, to allow loading of all SPR fuel elements in a maximum of 6 baskets. The inventory of SPR fuel elements in the K Basins is shown in Appendix B of Reference 1. The inside diameter of each loading position shall be sized to allow for a minimum acceptable clearance on the diameter for the largest diameter element. The total equivalent weight load limit of the Mark IA fuel basket shall not be exceeded. Flow paths shall be included in the walls of the loading jig to permit air flow during drying operations. Materials for the jig shall be selected such that potential for any galvanic action between it and the SPR fuel and cladding is minimized. All structural components of the Mark IA basket design, including criticality control features, shall remain unchanged with this modification.
Refer to Section 4, Item 18

The modification of the Mark IA storage basket for the handling of Single Pass Reactor fuel (SPR) is TBD. The formal conceptual design is pending funding and will be added later.

3.13 MCO SHIELD PLUG DESIGN

The MCO shield plug will be a cylindrical forging designed to mate with the open end of the MCO shell. The MCO shield plug also mates with the end effector on the top SNF fuel basket. The MCO assembly must be designed to have at least one-inch nominal free space between the bottom of the guard plate and the top of the SNF elements or fragments at 72°F. The shield plug will only provide worker shielding on the top of the MCO. The shield plug shall feature an integrally machined axisymmetric lifting ring with a 12 ton lifting capacity when gripped with six equally spaced 1.97-inch tangential length by 0.66-inch radial contact length grippers. The ring will facilitate handling of the MCO package when unloading from the transport cask, CSB storage tubes, and process cells with the MHM.
Refer to Section 4, Item 19.

The shield plug assembly which consists of the shield plug , guard plate, internal filters, process valves and pressure relief devices has a basket stabilizer extension which centers the top basket. The assembly has a nominal one inch clearance at 72°F above the fuel or fragments. The shield plug is held in place with a locking ring that has a lifting ring with a 12 ton capacity when gripped with six equally spaced grippers as specified. The demonstration of this capacity is shown in Appendix 6.

The MCO lifting ring design and cover cap lifting rim area must exhibit a safety factor of three on material yield and five on material ultimate strength.

The lifting ring area of both cover cap and the lifting ring complies with the factors of safety for non-critical lifts as shown in Appendices 5 and 6, respectively.

The MCO shielding design shall meet as low as reasonably achievable requirements in accordance with 10 CFR 835, Occupational Radiation Protection (CFR 1993), Subpart K, DOE Order 5480.11, Radiation Protection for Occupational Workers (DOE 1988), Paragraph 9a, HSRCM-1, Hanford Site Radiological Control Manual (RL 1994), Sections 111 and 311, WHCHNF-IP-1043, WHCHNF Occupational ALARA Program (WHCHNF 1995), Section 8.0, and NRC Regulatory Guide 8.8, Information Relative to Ensuring that Occupational Radiation Exposures at Nuclear Power Stations will be As Low As Reasonably Achievable, Revision 3, Section C.2.b, "Radiation Shields and Geometry", and Section C.2.f, "Isolation and Decontamination."

The MCO shield plug will shield workers against photons and neutrons emanating from the inside of the MCO. This shielding shall maintain an average dose across the top of the shield plug of 30 mrem/hr on contact (two inches) for the average MCO fuel inventory shown in Table 1 of Reference 6.1. The 30 mrem/hr limit includes radiation streaming between the MCO shield plug and MCO shell and streaming around penetrations. Streaming emanating from between the MCO and cask is not included. Streaming shall be minimized. For the worst case MCO specified in Reference 6.1, Section 3.1.3.1, Radioactive Source Term, the average dose across the top of the shield plug on contact (two inches) shall not exceed 100 mrem/hr.

The MCO provides more than the specified shielding as demonstrated in Appendix 16.
A summary of the shielding analysis is provided below.

Source Term	*Cleaned and reloaded Mark IV fuel elements: 5.43 MTU; 11 energy bins; 8.29 x 10^{15} photons/sec*
Model Geometry	*27 cm SS lid; 4 penetrations; 1 inch central and lateral holes through lid; 4 cm SS plate under filters; collar in place.*
Detector Geometry	*Tissue equivalent plastic in 3 thicknesses and 8 rings*

Requirement --<100 mrem/h contact, areal average (PeakLoad)	*<7mrem/h photons and neutrons.*
Requirement—30 mrem/h contact, areal average (Nominal Load)	*<2mrem/h photons and neutrons.*

The design of the shield plug reflects numerous features selected to achieve ALARA. The thickness of the stainless steel plug was maximized as much as possible to minimize the dose at the top of the shield plug. Passageways through the shield plug include 90 degree angles to prevent streaming. Shield plug appurtenances were designed to be actuated via both remote-operated and long handled tooling. MCO components have been selected that do not require maintenance or have an operating life longer than planned use.

The selection of the mechanical closure shield plug over the welded shield plug option was made after a thorough study was performed (WHC-SD-SNF-ES-021). This study included a detailed dose estimation based on specific operational steps involved with closing the MCO and cask. Based on these dose/manhour estimates, the decision to proceed with the mechanical closure was made. Therefore, the design does reflect consideration for the cumulative dose.

In the area of ALARA, Operations and Health Physicists (HP) have reviewed the design and have found that it meets the criteria. The reviews to date have indicated that the MCO design is acceptable from an overall radiation dose standpoint, considering the specific operational steps associated with loading , closing, processing, and handling the MCO in each facility.

Within the constraints of other interface requirements (dimensional restrictions, weight restrictions, fuel loading volume requirements, etc.) the current MCO design has resulted in the lowest dose rates possible across the top of the shield plug. This is a result of conscious decisions made during the design process.

The shield plug will provide access to the interior of the MCO via a minimum of three penetrations. The penetrations will connect to four ports counter bored into the top of the shield plug. A description of the ports, penetrations and associated equipment interface follows.

The shield plug has four penetrations with four ports as shown in Appendix 1.

Port #1. Connects to a penetration that leads to the internal HEPA filter bank.

- Up to 1 inch diameter drilled penetration
- Contains a threaded plug with a socket head,
- Capable of replacing threaded plug with a non-safety class rupture disk, and
- Capable of replacing threaded plug with an external HEPA filter

A one inch diameter penetration connects to the internal HEPA filter bank. The port consists of a threaded opening sealed with a socket head plug. The recommended seals for this port are metal C-seals that are retained on the components so that the parts can be replaced. The port as required can have a cover plate. This cover has metal C-seals providing a seal. The covers and attachment bolts are evaluated in Appendix 10.

Port #2. Connects to a penetration that leads to the internal HEPA filter bank.

- 1 inch diameter drilled penetration, and
- Port contains a process valve with a socket head.

This port connects to a 1-inch diameter penetration to the HEPA filter bank. The port is accessed by a process valve that may be covered with blind flange, as stated above. The process plug consists of a 1-7/8 inch threaded plug drilled in the center and then cross drilled below the top of the threads. As the plug is unthreaded, it rises exposing the cross drilled holes and allowing flow. The top has a hex head that can mate with a valve operator. The seal is maintained with a C-seal at the top of the threads that has been proven to reseal in the excess of five times. The torque required to seat the seal is evaluated in Appendix 10 and the seal data is provided in Appendix 14. The valve operator can use the same sealing surface as the cover plates to seal to the shield plug before operating the valve. The valve has both a external hexagonal operator as well as a internal socket.

Port #3. Connects to the long process tube which has a 2 mm screen at the end.

- Approximately .59 inch ID (1/2 inch sch. 80 pipe) minimum diameter drilled penetration
- Port contains a process valve, and
- Requires differentiation in connection for valve operator

The center long process tube connects to a process valve on the exterior of the shield plug via 0.609 inch diameter penetration. The process valve is the same as discussed above however the cover flanges are different. The cover plate has a five bolt pattern compared to the four bolt pattern used to cover the other ports.

Port #4. Connects to the short process tube which has a 2 mm screen at the end.

- 1 inch diameter drilled penetration
- Port contains a safety class rupture disk that will be incorporated into a process valve head
- Provides backup port to Port #2

This port connects to the short process tube is covered by a 2 mm screen through a one inch diameter penetration. The tube has a 2 mm screen at the end to preclude release of particles should the rupture disk rupture. The process valve is similar to the ones described above. The plug is drilled all the way through the center and has a rupture disk between the center bore and the exterior. Details can be found in Appendix 1. The rupture disk is the primary pressure relief device and is set at 150 psig. The cover plate has a four bolt pattern.

The connections leading to the long or short process tubes shall be designed to be easily differentiated by a worker looking at either the top or bottom of the shield plug. The design of the penetrations, ports, and valve mechanism shall implement the following criteria:

The seal connections for the valve operator have different bolt patterns.

Process valves shall be capable of normal operation and achieve sealing criteria in Section 4.3 in Reference 6.1 for five complete cycles.

The process valves can reseal in excess of 5 times, as documented in Appendix 14.

Provisions for pressurizing the MCO interior with an inert gas.

The MCO can be pressurized by the gas of choice through any of the process valves.

Provisions for purging gas from the MCO interior.

Gas may be purged through the use of any two of the process valves. The use of the long process tube would be more efficient.

Penetrations, connections, and seals shall be leakage rate testable in accordance with ANSI N14.5, Leakage Tests on Packages for Shipment of Radioactive Materials (ANSI 1987).

The entire MCO when assembled can be leak tested in accordance with ANSI N14.5 and ASME Section V, Article 10, 1998 by filling it through one of the process ports with a detectable gas and then placing it in a chamber where a vacuum can be pulled and the gas can be detected. Similarly a pressure drop or pressure rise can be used, provided that sensitive enough instrumentation were used to detect the 1 x 10^{-5} *scc/sec required leak rate.*

Provisions to make or break all connections while continuing to maintain SNF containment, with minimal spread of contamination.

By the use of the cover flange sealing surface a valve operator tool designed by others could be used to make and break all connections while maintaining containment.

All penetrations to be sealable to the containment leak rate criteria after the process connection is terminated.

As documented in Appendix 14, the process valve seals are resealable to the containment leak rate criteria.

Connections shall be such as to facilitate their decontamination as per Section 4.18 of Reference 6.1.

The connections are angled to prevent the trapping of debris and are of a smooth finish to facilitate decontamination.

Ports, penetrations, and connections shall be accessible to the operator from the top face of the MCO.

All ports, penetrations, and connections are accessible to the operator from the top per Appendix 1.

> Penetrations and connection connections shall not appreciably reduce or impair MCO shielding.

The shielding requirements are met with consideration of the process valves and penetrations as shown in Appendix 16.

> Provisions for removal or reinstallation of sealing mechanisms as required to cover shield plug appurtenances; these sealing mechanisms cannot extend above the top of the shield plug, including fasteners.

The process valves and rupture disk are designed to be replaced while regaining the same quality seal. The sealing mechanisms are compatible with remote operating equipment.

> Provision to bleed down, in a controlled way into the process piping, internal MCO pressure after process connections are made.

The process valve can be used to bleed down the into the process piping, MCO internal pressure with a correctly designed valve operator and pressure control device.

> Penetrations and connections shall be designed to facilitate remote operation via long handled tools, via a manipulator; and via manual means.

The penetrations and connections are designed to facilitate remote operating as well as manual means. Features such as captured bolts on the cover flanges, standard hex head operators, seals with ability to be retained insure this.

> Ports for rupture disk shall contain a cover with minimum 1 inch orifice for protection of rupture disk from an overhead strike.

Where required cover plates with 1 inch orifices can be installed.

> Process connections shall be designed with a hex cap on the process valve for the operator to engage.

As shown in Appendix 1, the process valves have a hex cap for the operator to engage.

> The bottom side of the shield plug shall incorporate a feature (guardplate) that will keep the internal filter elements dry during insertion of the shield plug into the MCO at the K-Basin pool.

As part of the shield plug, there is a guard plate that protects the filters as shown in Appendix 1 and Appendix 5. This provides for an air pocket that keeps the filters dry when the shield plug is *inserted into the MCO under water.*

In order to protect the shield plug appurtenances from damage during drops, a minimum of 3/8 inch clearance shall be provided between the top of the installed process valves and the bottom of the cover plates.

A minimum of 3/8 inch clearance is provided between the top of the installed process plug and the bottom of the cover plates.

3.14 INTERNAL PROCESS FILTER

The MCO shall have internal process filters to support the vacuum drying outflows from the MCO. These filters shall meet the requirements of HNF-S-0556, MCO Internal HEPA Filter Specification, and be installed between the shield plug bottom and the guardplate. The internal process filters and short process tube shall be protected by a guardplate capable of withstanding the drop accelerations in Table 3. The filter assembly installed with the shield plug shall be capable of withstanding the drop accelerations in Table 3 and still maintain flow capability. (Note: MCO Design Agent is responsible only for the structural attachment of the filter assembly to the shield plug). The filter assembly weight shall not exceed 50 lbs.
Refer to Section 4, Item 20.

The Internal HEPA Filter Specification, HNF-S-0556, is provided in Appendix 15. Appendix 10 provides verification that the structural attachment will support a filter assembly weighing up to 50 pounds for the maximum loading of 101 g's.

3.15 MATERIALS, PROCESSES, AND PARTS

The MCO shell shall be fabricated from type 304/304L dual certified stainless steel. All components welded to the MCO shell must be made of austenitic stainless steels compatible for welding to 304L stainless steel. A mechanically attached shield plug and any components thereof must be made from either 304L, 304N or Nitronic 60. All materials shall be ASME/ASTM certified materials. Provision shall be made to preclude metal-to-metal galling in threaded MCO components. The use of Nitronic 60 material is acceptable for the locking ring set screws, the cover plate bolts, the process valves, threaded plugs, and the rupture disk body. Thermal and chemical compatibility of materials must be shown suitable.
Refer to Section 4, Item 24.

The MCO shell and shield plug assembly are fabricated out of 304L stainless steel and the locking ring is made of 304N stainless steel to insure compatibility. 304/304L dual certified material is used for the collar and the shell to provide added strength and weldability. The process plugs are fabricated out of Nitronic 60 stainless steel. No ferritic materials are used in the design. All materials are specified as either ASME (SA) or ASTM (A) materials, as shown in

Appendix 1. Metal to metal galling is minimized by allowing the use of lubricants on all threaded surfaces and allowing them to be used on other closely fitting surfaces where operationally they would be permitted, such as between the radial surfaces of the locking ring and the shield plug. Harder material such as Nitronic 60 is used for the threaded fasteners.

3.16 MCO CORROSION CONTROL

Specifications generated for the MCO and MCO components shall require cleanliness during fabrication, handling, and storage - before and during use. ASTM A 380-94, "Standard Practice for Cleaning and Descaling Stainless Steel Parts, Equipment, and Systems" (ASTM 1996a), and ASME NQA-1, Quality Assurance Requirements for Nuclear Facility Applications (ASME 1994), shall be invoked for cleanliness control. Appendix D, MCO Corrosion Conditions, describes the corrosion environment encountered by the MCO during various phases of its operation. The MCO shall be designed and constructed to provide full service life under these corrosion conditions. The mechanical seal required for closure shall be of a material best suited for this application.
Refer to Section 4, Item 25.

Appendix A of the Performance Specification demonstrates the acceptability of austenitic stainless steel, specifically 304L for the environment that the MCO will experience. All major structural components of the MCO are fabricated out of austenitic stainless steel and hence there is no significant corrosion impact on the design life of the MCO. The aluminum positioning plate does not detrimentally affect the MCO or baskets and serves no function after initial loading. The copper used in the scrap basket does not adversely affect the MCO or baskets. See Appendix 2. Cleanliness requirements as noted are included in the fabrication specification.

3.17 WELDED JOINTS

All MCO fabricator pressure boundary welds shall be made in accordance with ASME Code, Section III requirements. All welds shall be sufficiently smooth to enable easy decontamination. Butt welds to be ground flush to within .03 inches of base metal. Weld joint designs shall avoid potential contamination traps to the greatest extent practicable. All MCO pressure boundary welds and welds bearing the weight of the fully loaded MCO must be designed for and pass 100% volumetric examination (radiographic or ultrasonic) per ASME requirements. Exceptions for field welds only shall be documented and justified and approved by the buyer.

The field weld joining the cover cap to the MCO shell shall be designed to permit a 100% ultrasonic examination. As determined by the Buyer, flat surfaces behind the weld a minimum of 1.10 inches below and 1.325 inches above the weld centerline are required to facilitate this examination. Additionally, a 30 degree half angle is required on the weld preparations for a 60 degree weld.

Refer to Section 4, Item 26.

All MCO pressure boundary welds are designed and produced to ASME Section III, Division 1, Subsection NB, except the field closure weld which is a full thickness weld that cannot be 100% radiographically examined. It is designed for 100% ultrasonic examination. The acceptance of this weld is that it provides closure to a stabilized system and the quality is insured by welding qualification and the use of liquid penetrant inspection per Code Case N-595. The margins of safety for the weld are provided in Appendices 5 and 11.

3.18 DECONTAMINATION PROVISIONS

MCO exposed surfaces shall facilitate their decontamination. All exposed surfaces shall be smooth without cracks or crevices. Blind or hidden corners or joints in areas potentially exposed to contamination that can not be readily accessed by hand held spray devices shall be minimized. **Refer to Section 4, Item 27.**

All exposed surfaces are smooth with out cracks or crevices to facilitate decontamination. Access to all surfaces is available as can be seen in Appendix 1.

3.19 SAFETY REQUIREMENTS

Refer to Section 4, Item 28

3.19.1 Safety Classification

MCO components shall be classified by safety class in accordance with the requirements of HNF-PRO-704, *Safety Analysis Manual* (PHMC 1997), Section 9.0. MCO components providing fuel containment and criticality control shall be Safety Class items and comply with the requirements of HNF-PRO-704. All other MCO components shall be Safety Significant or General Service items. Safety Class items are:

- MCO Shell Assembly
- Mark IA storage and scrap baskets (structural components)
- SPR storage baskets (structural components)
- Rupture Disk used in Port #4
- MCO Shield Plug Assembly (excluding all port components, except the rupture disk)
- Cover Cap

The various components of the MCO are classified into safety classes in agreement to the above in section 3.9.1 of this report. The applicable code requirements are then applied. The *containment boundary components are designed and fabricated to ASME Code, Section III, Division 1, Subsection NB and the Mark 1A baskets for criticality control purposes are designed and fabricated to Subsection NG.*

3.19.2 Design Basis Accidents

All Safety Class items shall maintain containment, confinement, and subcriticality during and after the Design Basis Accidents (DBAs) listed below. All Safety Significant items, whose failure could result in the failure of the Safety Class items above, shall also be designed to withstand the DBAs listed below.

NOTE: The following design basis accident loadings are required to meet the Service Level D requirements of the ASME B & PV Code, Section III, Subsection NB for Safety Class items which provide fuel containment, confinement, and criticality control. Items required to prevent failure of the Safety Class items are also required to meet the same Service Level D requirements. (Service Level D allowable stresses may be exceeded for horizontal and corner drops while the MCO is in the cask. However, the criticality control measures in 4.19.3 of Reference 6.1 shall be maintained.)

- Design Basis Fire -- Temperatures resulting from exposure to a design basis accidental fire on the outside of the transportation cask. [From 10 CFR 71.73 (3)] This basis fire shall result in exposure of the outside of the cask for not less than 30 minutes to a heat flux not less than that of a radiation environment of 800 °C with an emissivity coefficient of at least 0.9. For purposes of calculation the surface absorptivity must be either that value which the shipping cask may be expected to possess if exposed to a fire or 0.8, whichever is greater. (This fire shall raise the MCO shell temperature to 122°C for 180 minutes after the fire. The 132°C design temperature bound the temperature associated with this fire.) (Note: No analyses required by the MCO Design Agent.)

- Design Basis Earthquake -- The design ground acceleration at the CSB is .35 g. Although this will be amplified due to the position of the MCOs within the facility, the design basis accident drop accelerations bound any imposed earthquake accelerations from the K Basins, CSB, and CVD. (Note: No analyses required by the MCO Design Agent.)

- Design Basis Tornado -- The CSB, and CVD, incorporate preventive and mitigative features regarding radionuclide releases from MCOs due to tornadoes (as determined necessary by Probabilistic Risk Assessments). (Note: No analyses required by the MCO Design Agent.)

- Design Basis Hydrogen Deflagration -- The MCO shall maintain confinement during a design basis hydrogen deflagration event (Service Level D event) beginning at atmospheric pressure inside the MCO at 75°C. (Note: No analyses required by the MCO Design Agent.)

- Design Basis Drops -- The following design basis accident drops have been determined to create accelerations listed in Table 3 that must be survived while maintaining confinement, containment (except for cask drops) and subcriticality. Accelerations to be used for the design basis are listed in Table 3. Temperature range for these drops is 25 to 132°C and pressure range is 0 to 450 psig.

- A two foot vertical drop of a sealed MCO package onto flat reinforced concrete. The MCO lands on the bottom end and there is no credible possibility of a side slap down secondary impact of the MCO.
- A drop (worst case orientation) of the MCO package inside the sealed transportation cask. For an end drop scenario, a secondary side slap down shall be considered. The MCO is physically constrained by the cask walls and remains in the cask. Note: For all drops when the MCO is in the cask, the MCO does not need to maintain a leak tight seal. The MCO shall be able to retain all particulate greater than 2 mm in size or greater after the deformation occurs.
- A vertical drop of the MCO package into the transport cask. Drop heights not to exceed 21.5 feet. "Piston effect" shall be included.
- Vertical drops of MCO package into a CSB storage tube with and without another MCO already within the tube. The tubes will contain impact limiters as required to reduce impact acceleration on the MCO and internals. Each MCO acceleration is limited to 35 g within the CSB tubes.

For all accelerations the fuel shall be modeled with the properties of stainless steel except for the scrap baskets which shall have hydrostatic properties when externally loaded. In cases where one component is dropped onto another (e.g. MCO onto an MCO in the storage tube, and MCO impacting the inside top or bottom of the cask), the eccentricity of the drop is negligible and does not require consideration.
Refer to Section 4, Item 29.

Table 3. MCO and Component Accelerations (g's) Resulting From Design Basis Accident Drops

COMPONENT		g's "PISTON DROP" INTO CASK*	g's TWO (2) FOOT DROP	g's DROP INTO CSB TUBE	g's DROPPED WITH CASK $^{(1)}$
Loaded MCO	Horizontal	N/A	N/A	N/A	101
	Vertical	25	54	35 (Spec) Lower MCO 28 (Calculation)	27
	Corner	N/A	N/A	Upper MCO N/A	Lid Up 33.5 Lid down 27.4
Mark IA Basket Within MCO	Horizontal	N/A	N/A	N/A	101
	Vertical	25 Bottom Basket 25 Other Baskets	34	35 (SPEC)	27 Bottom Basket 27 Other Baskets
	Corner	N/A	N/A	N/A	Lid down: top bskt 27.4; other 27.4 Lid up: bottom bskt 33.5; others 33.5
Mark IV Basket Within MCO	Horizontal	N/A	N/A	N/A	101
	Vertical	25 Bottom Basket 25 Other Baskets	54	35 (Spec)	27 Bottom Basket 27 Other Baskets
	Corner	N/A	N/A	N/A	Lid down: top bskt 27.4; others 27.4 Lid up:bottom bskt 33.35; others 33.5

* g's computed assuming the MCO is slowed by piston-like cushioning effect from air being squeezed through the 0.25 inch diametral clearance between the cask and the MCO and by the cushioning effect of adding water to the bottom of the cask. (Alternate means of limiting the acceleration to <35g are being investigated.)

(1) Reference SARP Tables B7.21 and B7.24

Angle of impact for C/G drop in cask is 10.5 degrees off vertical.

In accordance with the requirements above, the loads provided in Table 3 are evaluated in two ways. The loads that are applied to the MCO shell are evaluated in Appendix 5. These are all the loads that are applied to the containment boundary and have acceptance criteria coming from subsection NB. Tthe horizontal loading and corner drop loads when the MCO is in the cask are not evaluated to Code criteria per the Performance Specification. The cask provides the containment in these load conditions. Additionally there is a high probability of localized denting of the MCO shell where it interacts with the ring inside the cask. The localized denting in the side wall will give stresses beyond those acceptable for Service Level D. However, due to the high elongation of the material and the limited amount of distortion (thickness of the ring), no expected breach of containment by the MCO is expected. Since this is an inward denting, the circumference criteria for criticality is not expected to be violated. For all other load conditions the criteria of Subsection NB, Reference 6.2, was met. The shell is also evaluated to demonstrate that the circumference restriction for criticality control purposes is not violated for any of the load conditions.

The second set of evaluations for the loadings in Table 3 was performed for the Mark 1A baskets. In addition to meeting the criteria of Subsection NG, 6.3 the criteria of maintaining geometry for criticality control in sequential loadings of first the vertical loading and then the horizontal and/or corner loadings was imposed. This evaluation is performed in Appendix 7. Both the criteria for Subsection NG and the criticality control geometry was met for all load conditions.

The evaluations demonstrates that the center tube does not move radially more than two inches. It is also demonstrated that the baskets do not deflect sufficiently to be come uncoupled allowing the fuel particles bigger than 2 mm to enter into the center void. The Mark IV baskets have no function in assuring criticality control per the Performance Specification and were not evaluated for other than lifting and handling loads.

3.19.3 Nuclear Criticality Safety

The MCO design shall achieve and maintain a critically safe array throughout the MCO design life. A criticality safety value of 0.95 for Keff shall be used for the MCO design, functions, and related activities. Per criticality analyses performed by the Buyer, this will be satisfied for MCOs containing MKIA fuel by a nominal 6.625 inch diameter void space at the longitudinal centerline of the MCO. This void space is defined by the 6.625 inch outer by 1.75 inch inner diameter of the center bar of the Mark IA fuel baskets. As this void space is solid steel, by definition, it will preclude intrusion of fuel into this void space. The void space centerline shall not deviate more than two inches from the MCO centerline. The MCO shall maintain these conditions during and after being subjected to the design basis accidents described in Section 14.19.2 of Reference 6.1. MCOs containing MKIV fuel do not require this void space. Additionally, the MCO (for all fuel types) shall be capable of withstanding the effects of the DBAs outlined in Section 4.19.2 of Reference 6.1 with the maximum inside circumference not exceeding the limits allowed in Section 14.9.5 of Reference 6.1.
Refer to Section 4, Item 30

As stated above the MCO shell is evaluated for all loadings specified in Table 3. The evaluation shows that none of the criticality criteria stated above is violated. Details can be found in Appendix 5. The Mark 1A baskets are evaluated for all applicable loads in Table 3 and are demonstrated not to violate any of the criticality control criteria stated above. The details of the Mark 1A baskets can be found in Appendix 7. The design and evaluation of the Mark 1A baskets is based on the MCO being fully loaded with six baskets. No evaluation was performed for partial loads. The required criticality control features of the basket would not work with partial loads.

3.19.4 Relieve Overpressure

The MCO shall relieve internal pressure in excess of 150 psig while it is flooded with water. The MCO shall provide a safety class rupture disk imbedded in the shield plug to facilitate over pressure protection. The rupture disk shall have a minimum 1 inch diameter flow area to accommodate pressure relief. The rupture disk shall be covered with removable 1 inch minimum orifice plate to provide protection to the disk from potential overhead strikes (i.e. dropped tools, gauges, equipment, etc.).

Once water is removed from the MCO and the cold vacuum drying process is complete, the rupture disk orifice plate will be replaced with a blind cover plate and the disk will become inactive and remain inactive during cover cap welding and interim storage at the CSB.
Refer to Section 5, Item 31.

Over pressure protection is provided for the MCO primarily by the use of a rupture disk set at a pressure of 150 psig. This device is located in the process valve that accesses the short process tube. It can be covered with a flange with a 1-inch diameter hole in it to provide the required flow restriction and protection. The rupture disk can be replaced by replacing the process valve plug. The plug can then be refurbished with a new rupture disk if desired and decontamination levels permitting. Appendix 12 provides details on the rupture disk.

3.20 QUALITY ASSURANCE

3.20.1 General Requirements

The Phase 2 Design Agent shall formulate and execute quality assurance programs that provide the following assurances:

- Performance requirements and design criteria are established, documented, and clearly understood.
- Studies, analyses, and design decisions are fully documented.
- Design meets performance requirements and design criteria.
- Design is complete, adequate, and properly documented.
- Traceability to the requirements of the contract technical specification is maintained.

3.20.2 Responsibility For Quality Assurance

The Phase 2 Design Agent shall be responsible for planning and documenting quality assurance audits, including those under the direct responsibility of lower tier subcontractors. The Buyer reserves the right to access and inspect work performed by the contractor and his subcontractors, as well as to direct additional inspections.

3.20.3 Quality Assurance Requirements

3.20.3.1 Multi-Canister Overpacks

Quality assurance requirements shall be applied to MCO design and fabrication activities as follows:

a. MCO Design Activities

MCO design related activities shall be performed in accordance with the applicable sections of 10 CFR 71, *Packaging and Transportation of Radioactive Materials*, Subpart H, *Quality Assurance*, as specified in the *Statement of Work for System Design and Engineering of the Spent Nuclear Fuel Multi-Canister Overpack*, (HNF-SD-SNF-SOW-001).

b. MCO Fabrication

MCO fabrication, including the supply of MCO materials, shall be performed in accordance with the ASME Code, Section III, Division I.

3.20.3.2 Multi-Canister Overpack Baskets

Quality assurance requirements shall be applied to MCO basket design and fabrication activities as follows:

a. MCO Basket Design Activities

MCO basket design related activities shall be performed in accordance with the applicable sections of 10 CFR 71, Subpart H, as specified in the *Statement of Work for System Design and Engineering of the Spent Nuclear Fuel Multi-Canister Overpack*, (HNF-SD-SNF-SOW-001).

b. MCO Basket Fabrication

MCO basket fabrication shall be performed in accordance with the Project Hanford Management Contract (PHMC) *Quality Assurance Program Description (QAPD)*, (HNF-MP-599).

The Hanford Occurrence Reporting System shall be implemented as outlined in HNF-PRO-060, "*Reporting Occurrences and Processing Operations Information*," (PHMC 1998), Section 7.1 for the design and fabrication of the MCO and MCO baskets. The MCO and MCO basket fabrication specifications shall require suppliers to report defects and non-compliances in items or services.

Refer to Section 4, Item 32.

A quality assurance program has been implemented in the design and fabrication requirements for the MCO and its fuel baskets. Per DESH direction, a QA program having the applicable sections of 10 CFR 71, Subpart H program is required for the design of the MCO and baskets. The MCO fabrication, shall be in full compliance with the applicable codes which are ASME Code, Section III, Division 1, Subsection NB for the containment boundary . The basket fabrication shall be performed in accordance with the Project Hanford Management Contract(PHMC) Quality Assurance Program Description (QAPD), (HNF-MP-599).

4.0 COMPLIANCE MATRIX

Design/Interface Parameter	Requirement	Source(s)	How Design Complies with P.S. Requirement
1. Design Life	Maintain fuel elements and fuel fragments for 40 years. No known factors prevent the MCO from being extended to 75 years.	P.S. 4.1, Rev. 5	Material and design have no known aspects that will prevent compliance. Materials of construction were selected to resist corrosion.
2. SNF Confinement	Confine contents during all normal operations and DBAs.	P.S. 4.2, Rev. 5	Confinement is demonstrated Appendices 4, 5 and 11.
3. SNF Containment	Total gaseous leaks shall not exceed 1×10^{-5} scc/sec. When sealed by welding, shall be capable of not exceeding a maximum total leak rate of 1×10^{-7} scc/sec.	P.S. 4.3, Rev. 5	All seals and closure are designed with capabilities of leak tightness better than 1×10^{-5} scc/sec. The welded portion of the containment boundary is tested to demonstrated leak tightness better than 1×10^{-7} scc/sec. The field closure weld is leak tested. The mechanical seal is designed to 150 psi. The complete welded containment of the MCO with the cover cap in place is designed to 450 psi.

Design/Interface Parameter	Requirement	Source(s)	How Design Complies with P.S. Requirement
4. Maintainability	Designed to minimize the need for preventive maintenance, and allow replacement of the externally mounted rupture disk.	P.S. 4.4, Rev. 5	No preventive maintenance is expected. The rupture disk and holder is designed to be replaced as needed.
5. Human Factors	Components shall be designed to facilitate handling and assembly with the use of appropriate handling equipment and also enable handling while wearing protective clothing used in radiation zones.	P.S. 4.5, Rev. 5	The components can be easily handled and assembled with the appropriate handling equipment.
6. Interchangeability	To the maximum extent possible. (i.e., any set of like baskets can be loaded into any MCO shell, any MCO shield plug and locking ring can be used to close and seal any MCO shell, etc.).	P.S. 4.6, Rev. 5	All major components , MCO shell assembly, Shield Plug Assembly, Process valve plugs, cover caps, locking rings and all baskets are designed to be fully interchangeable.
7. Environmental Conditions	Capable of performing its mission while subjected to the environmental conditions listed in Table 3.1.	P.S. 4.7, Rev. 5	The MCO materials are fully compatible with the environmental conditions specified.

Design/Interface Parameter	Requirement	Source(s)	How Design Complies with P.S. Requirement
8. Transportability	Transportable by highway from the fabricator facility to the location within the Hanford site.	P.S. 4.8, Rev. 5	The dimensions of the components shown in Appendix 1 makes them all transport compatible.
9. Code Requirements	ASME Boiler and Pressure Vessel Code, Section III, Subsection NB; for the MCO containment.	P.S. 4.9.1, Rev. 5	The MCO containment meets the ASME Code requirements as specified in Section III, Subsection NB within the limits of the Performance Specification.
10. Design Pressure	450 psig with the cover cap installed and 150 psig when sealed with the mechanical seal only.	P.S. 4.9.2, Rev. 5	The MCO containment is designed for a 450 psig design pressure with cover cap installed and 150 psig with only the mechanical seal in place.
11. Design Temperature	132°C	P.S. 4.9.2, Rev. 5	The MCO containment and components are designed for processing temperatures up to 132°C. See Appendix 11.
12. Processing Operating Pressure	Full internal vacuum 25 psig external @ 75°C	P.S. 4.9.2, Rev. 5	The load conditions evaluated bound this condition. See Appendix 11.
13. Processing Operating Pressure	Full vacuum internal 0 psig external @ 132°C	P.S. 4.9.2, Rev. 5	The load conditions evaluated bound this condition. See Appendix 11.

Design/Interface Parameter	Requirement	Source(s)	How Design Complies with P.S. Requirement
14. Processing Operating Pressure	75 psig internal, 0 psig external, @ 132°C	P.S. 4.9.2, Rev. 5	The design pressure and pressure bound this condition. See Appendix 11.
15.. Maximum temp gradient between MCO shell and center of shield plug.	100°C, thermal expansion of 0.65 inch in axial direction.	P.S. 4.9.2, Rev. 5	This load condition is evaluated in Appendix 11.
16. MCO Shell Design	1.0 inch Minimum between inside of MCO bottom and bottom of lowest basket.	P.S. 4.10, Rev. 5	See Appendix 1 for compliance.
17. MCO Closure Design	Final welded closure cap. Mechanical closure prior to welding cover cap in place.	P.S. 4.11, Rev. 5	See Appendix 1 for compliance.

Design/Interface Parameter	Requirement	Source(s)	How Design Complies with P.S. Requirement
18. Fuel Basket Design	MKIA 304L or a material of equal or greater corrosion resistance properties. Service Level A requirements and Service Level D. ASME Boiler and Pressure Vessel Code, Section III, Subsection NG; NUREG/CR 3854, UCRL-53544; Capacity = 48 elements. MKIV - FS of 3 and 5 for lifting 54 elements. MKIA Scrap - Same as MKIA except capacity is 575 kg. MKIV Scrap - Same as MKIV except capacity is 980 kg.	P.S. 4.12, Rev. 5	See Appendix 1 for compliance with design requirements. Appendix 7 demonstrates the Mark 1A baskets capabilities to comply with the load requirements and applicable Code requirements. Appendices 8 and 9 demonstrate the capabilities of the Mark IV basket to meet the required load conditions including lifting. The capacity of the Mark IV fuel basket is 54 elements and the capacity of the Mark 1A basket is 48 elements. The capacity of the Single Pass Reactor Basket is TBD.

Design/Interface Parameter	Requirement	Source(s)	How Design Complies with P.S. Requirement
19. MCO Shield Plug Design	Designed to mate with open end of the MCO shell and also mates with the end effector on the top SNF fuel basket. One inch minimum free space between the bottom of the shield plug assembly and the top of the SNF elements or fragments. Feature an integrally machined axisymmetric lifting ring with a 12 ton lifting capacity. 10 CFR 835, Subpart K; DOE Order 5480.11, Paragraph 9a; HSRCM-1, Sections 111 and 311; HNF-IP-1043, Section 8.0; and NRC Regulatory Guide 8.8, Section C.2.b, and C.2.f.	P.S. 4.13, Rev. 5	The MCO Shield Plug assembly closes the fully open MCO, provides shielding, protects the HEPA filter bank, stabilizes the top fuel basket, allows for penetrations to the filter bank the process tube and the process tubes. The features of the shield plug assembly and the clearances between the fuel and the assembly can be seen in Appendix 1. The shield plug is held in place with jacking bolts (set screws) between it and the locking ring. The locking ring has a integral lifting ring that has in excess of a twelve ton capacity complying with Performance Specification requirements for lifting.
20. Internal Process Filter	The specification states these filters are rated as HEPA(i.e., 0.3μm capture at 99.97%efficiency) and have demonstrated flow capacity. Capable of withstanding a 100 G drop without damage.	P.S. 4.14, Rev. 5	The internal process filters are specified by the buyer. Details can be found in Appendix 15. The attachment capability of the manifold to withstand a 100 g loading. (Actually the maximum loading is the 101g horizontal loading is shown in Appendix 10.

Design/Interface Parameter	Requirement	Source(s)	How Design Complies with P.S. Requirement
21. Design Goal MCO Weight	Goal weights for MCO with MKIA fuel (dry) 16,082 lbs., with MKIV fuel (dry) 19,242 lbs.	P.S. 4.9.3, Rev. 5	The nominal weight with shield plug and no cover, MK 1A fuel (dry is 18,264 lbs and with MKIV fuel (dry) is 19,691 lbs.
22. MCO Height	160 inches with out cap. 167.30 inches with cap.	P.S. 4.9.4, Rev. 5	As seen in Appendix 1. Maximum height without cap is 160 inches. Maximum height with cap is less than 167.3 inches.
23. MCO Diameter	Nominal OD is 24 inches. Above bottom shield plug is 25.31 inches.	P.S. 4.9.5, Rev. 5	The nominal OD is 24 inches. Above the 148 inch elevation the maximum OD is 25.31 inches. Below 148 inches, the maximum circumference is less than 73.04 inches.
24. Materials, Processes, and Parts	MCO shell shall be fabricated from type 304/304L stainless steel. All materials shall be ASME/ASTM certified materials.	P.S. 4.15, Rev. 5	All welded components of the MCO including the shell are fabricated from 304/304L stainless steel. All materials are designated ASME (SA) or ASTM (A) as shown in Appendix 1.

Design/Interface Parameter	Requirement	Source(s)	How Design Complies with P.S. Requirement
25. MCO Corrosion Control	Cleanliness during fabrication, handling, and storage. ASTM A 380-94 and ASME NQA-1. A mechanical seal is required for final closure.	P.S. 4.16, Rev. 5	Cleanliness is specified during fabrication handling , transportation and storage. This is covered in the Fabrication Specification and the Warehouse Plan. A mechanical closure is used with compatible materials to the shell that will assure its design life similar to the MCO permitting redundant closure seals when the cover cap is welded in place.
26. Welded Joints	ASME Section III, Division 1, NB-3350. Butt welds to be ground flush to within .03 inches of base metal. All MCO pressure boundary welds and welds bearing the weight of the fully loaded MCO must be designed for and pass 100% volumetric examination per ASME requirements, except the field closure welds.	P.S. 4.17, Rev. 5	All pressure boundary welds are designed as per ASME Section III Division 1, NB-3350 welds. All pressure boundary welds and those bearing the weight of the fully loaded MCO meet the volumetric examination requirements of the ASME Code. All welds are flush within 0.03 inches. The field closure welds will be examined per the requirements of Code Case N-595.
27. Decontamination Provisions	All exposed surfaces shall be smooth without cracks or crevices.	P.S. 4.18, Rev. 5	As shown in Appendix 1 all exposed surfaces are smooth and without cracks or crevices.

Design/Interface Parameter	Requirement	Source(s)	How Design Complies with P.S. Requirement
28. Safety Classification	HNF-PRO-704, Section 9.0; 10 CFR 71.73 (3); Service Level D requirements of the ASME B & PV Code, Section III, Subsection NB.	P.S. 4.19, Rev. 5	The components are classified in accordance with the Performance Specification and the applicable sections of the ASME Code and Service Level conditions are complied with.
29. DBA's: Fire Earthquake Drops	Temperature increase of 122°C for 180 minutes after the fire. Acceleration of CSB of .35g. See Table 3 in Section 3.19.2.	P.S. 4.19.2, Rev. 5	The conditions resulting from the fire are bounded by other cases analyzed for. The loads for the drop conditions bound the earthquake conditions. The MCO is shown to meet the drop load conditions in Appendix 5. The Mark A baskets are shown to with stand the loads from Table 3 of the Performance Specification in Appendix 7. Mark IV baskets are not required for criticality safety and are evaluated for lifting in accordance with the Performance Specification.
30. Criticality Safety	6.625 inch void space in center of MCO for MKIA baskets.	P.S.4.19.3 Rev. 5	Appendix 7 demonstrates that the void space is maintained even after sequential drops of vertical and then horizontal. Appendix 5 demonstrates that the circumference requirements are met.

Design/Interface Parameter	Requirement	Source(s)	How Design Complies with P.S. Requirement
31. Overpressure Relief	MCO shall relieve internal pressure.	P.S. 4.19.4, Rev. 5	Relief device features, as specified in the Performance Specification, have been incorporated in the design. See Appendix 1.
32. Q.A.	Applicable sections of10 CFR 71 Subpart H for design MCO containment shall fabricated. in accordance with ASME Code, Section III, Division I. MCO basket fabrication in accordance with Hanford Management Contract Quality Assurance Program Description (HNF-MP-599).	P.S. 5.0, Rev. 5	The QA requirements imposed by the Performance Specification were used in the design and are part of the fabrication specification.

5.0 SUMMARY OF COMPLIANCE WITH REQUIREMENTS

The design of the MCO and fuel baskets is in full compliance with the requirements of the Performance Specification, Reference 6.1. The compliance is demonstrated in the design drawings shown in Appendix 1 and in the evaluation of the design to the specified requirements in Appendices 2-17.

6.0 REFERENCES

6.1 HNF-S-0426, Rev 5, Performance Specification for the Spent Nuclear Fuel Multi-Canister Overpack, December, 1998

6.2 ASME Code, Section III, Division 1, Subsection NB, 1998

6.3 ASME Code, Section III, Division 1, Subsection NG, 1998

6.4 HNF-SD-SNF-TI-015 Rev. 0, Spent Nuclear Fuel Project Technical Data book August 11, 1995

7.0 APPENDICES

Appendix 1 MCO Drawings

H-2-828040		Rev 2	MCO Drawing List
H-2-828041	Sh 1	Rev 2	MCO Assembly
	Sh 2	Rev 2	
	Sh 3	Rev 2	
H-2-828042	Sh 1	Rev 2	MCO Closure
	Sh 2	Rev 2	
	Sh 3	Rev 2	
H-2-828043		Rev 2	MCO Shell
H-2-828044		Rev 2	MCO Shell Bottom
H-2-828045	Sh 1	Rev 2	MCO Mechanical Closure Shield Plug
	Sh 2	Rev 2	
	Sh 2	Rev 2	
H-2-828046		Rev 2	MCO Internal Filter Guard
H-2-828047		Rev 2	MCO Process Valves
H-2-828048		Rev 2	MCO Process Port Cover Plates
H-2-828049		Rev 2	MCO Internal Filter Assembly
H-2-828050		Rev 2	MCO Basket Stabilizer Extension
H-2-828051		Rev.2	MCO Process Tube
H-2-828052		Rev 2	MCO Process Tube Guide Cone
H-2-828053		Rev 2	MCO Basket Support Plate
H-2-828060	Sh 1	Rev 2	K-Basin SNF Storage Basket Mark 1A
	Sh 2	Rev 2	
	Sh 3	Rev 2	
	Sh 4	Rev 2	
	Sh 5	Rev 2	
H-2-828065	Sh 1	Rev 3	K-Basin SNF Scrap Basket Mark 1A
	Sh 2	Rev 3	
	Sh 3	Rev 3	

	Sh 4	Rev 3	
	Sh 5	Rev 3	
H-2-828070	Sh 1	Rev 1	MCO Mark IV Storage Basket
	Sh 2	Rev 1	
	Sh 3	Rev 1	
	Sh 4	Rev 0	
H-2-828075	Sh 1	Rev 3	MCO Mark IV Scrap Basket
	Sh 2	Rev 3	
	Sh 3	Rev 2	
	Sh 4	Rev 0	

Appendix 2	Material Evaluation	
Appendix 3	Weight Summary	Calculation-01 Rev 2
Appendix 4	MCO Closure Bolt Preload Modeling and Response	Calculation-02 Rev 2
Appendix 5	MCO Structural Drop Analysis	Calculation-03 Rev 2
Appendix 6	Stress Analysis of the Lifting Cap and Canister Collar	Calculation-04 Rev 2
Appendix 7	Stress Analysis of the Mark 1A Storage and Scrap Baskets	Calculation-05 Rev 2
Appendix 8	Stress Analysis of the Mark IV Storage Baskets	Calculation-06 Rev 2
Appendix 9	Stress Analysis of the Mark IV Scrap Basket	Calculation-07 Rev 2
Appendix 10	Stress Analysis of Shield Plug Interface Components	Calculation-08 Rev 2
Appendix 11	MCO Thermal Stress Evaluation	Calculation-09 Rev 2
Appendix 12	Rupture Disk Data	
Appendix 13	Main Seal Data	
Appendix 14	Seal Data for Process Valve, Covers, and Filters	
Appendix 15	HEPA Filter Data	
Appendix 16	K-Basin MCO Shield Plug Thickness Technical Evaluation	
Appendix 17	Warehouse Plan	
Appendix 18	Deleted	
Appendix 19	Fabrication Specification for Multi-Canister Overpack	

PROJECT TITLE:

MULTI-CANISTER OVERPACK (MCO)

FOR:

DUKE ENGINEERING & SERVICES HANFORD, INC (DESH)

BY:

PARSON'S INFRASTRUCTURE & TECHNOLOGIES GROUP, INC

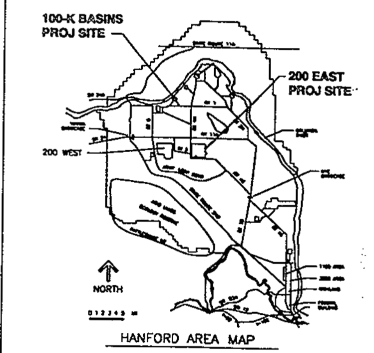

HANFORD AREA MAP

DRAWING LIST

MULTI-CANISTER OVERPACK (MCO)

DRAWING NO.	INDEX NO.	TITLE
H-2-828040	0000	MULTI-CANISTER OVERPACK DRAWING LIST
H-2-828041, 3 SH	3902	MULTI-CANISTER OVERPACK ASSEMBLY
H-2-828042, 3 SH	3902	MCO MECHANICAL CLOSURE
H-2-828043	3902	MCO SHELL
H-2-828044	3902	MCO SHELL BOTTOM
H-2-828045, 3 SH	3902	MCO MECHANICAL CLOSURE SHIELD PLUG
H-2-828046	3902	MCO INTERNAL FILTER GUARD
H-2-828047	3902	MCO PROCESS VALVES
H-2-828048	3902	MCO PROCESS PORT COVER PLATES
H-2-828049	3902	MCO INTERNAL FILTER ASSEMBLY
H-2-828050	3902	MCO BASKET STABILIZER EXTENSION
H-2-828051	3902	MCO PROCESS TUBE
H-2-828052	3902	MCO PROCESS TUBE GUIDE CONE
H-2-828053	3902	MCO BASKET SUPPORT PLATE

MCO BASKETS

DRAWING NO.	INDEX NO.	TITLE
H-2-828060, 5 SH	3902	K-BASIN SNF STORAGE BASKET MARK 1A
H-2-828065, 5 SH	3902	K-BASIN SNF SCRAP BASKET MARK 1A
H-2-828070, 4 SH	3902	MCO MARK IV SNF STORAGE BASKET
H-2-828075, 4 SH	3902	MCO MARK IV SNF SCRAP BASKET

VENDOR INFORMATION

NUMBER	TITLE
H-305236 (REV NC)	HELICOFLEX SEAL
4319-00	COOK SCREEN TECHNOLOGIES SHORT DRAW TUBE
13632	EG & G PRESSURE SCIENCE SEAL
801A91-0012-A	EG & G PRESSURE SCIENCE SEAL
14119	EG & G PRESSURE SCIENCE BOSS C-SEAL
13503	EG & G PRESSURE SCIENCE SEAL

SPECIFICATIONS

SPEC NO.	TITLE
HNF-S-0453	FABRICATION SPECIFICATION FOR MULTI-CANISTER OVERPACK
HNF-S-3868	FABRICATION SPECIFICATION FOR MCO BASKETS
HNF-S-0426	PERFORMANCE SPECIFICATION FOR THE SPENT NUCLEAR FUEL PROJECT MULTI-CANISTER OVERPACK

GENERAL NOTES
FOR DWG H-2-828041 THRU H-2-828053 ONLY

1- ALL DIMENSIONS AND TOLERANCING ARE IN ACCORDANCE WITH ANSI Y14.5M-94. DIMENSIONS ARE IN INCHES AND APPLY AT 72°F UNLESS OTHERWISE SPECIFIED. ALL TOLERANCING APPLIES AFTER WELDING AND FINAL MACHINING.
UNSPECIFIED TOLERANCES SHALL BE:
- DECIMAL 0.X = ± 0.06
  0.XX = ± 0.03
  0.XXX = ± 0.015
- FRACTIONAL ± 1/16"
- ANGULAR ± 1/2°
- COAXIAL FEATURES SHALL BE CONCENTRIC WITHIN ± ⌀ 0.003
- MACHINED FILLET RADII SHALL BE 0.03 MAXIMUM
- MACHINED SURFACES SHALL BE 125√ OR BETTER PER ASME B46.1-95

2- SURFACE TEXTURE SYMBOLS ARE IN ACCORDANCE WITH ASME Y14.36-96. SURFACE TEXTURE VALUES ARE IN MICROINCHES PER ASME B46.1-95.

3- BREAK ALL SHARP EDGES AND REMOVE ALL BURRS.

4- ADDITIONAL FABRICATION REQUIREMENTS ARE IN SPEC HNF-S-0453, FABRICATION SPECIFICATION FOR MULTI-CANISTER OVERPACK.

5- MATERIALS, FABRICATION, AND INSPECTION SHALL BE IN ACCORDANCE WITH ASME SECTION III, DIVISION 1, SUBSECTION NB AS INDICATED BY SPECIFIC COMPONENT DRAWING.

6- WELD SYMBOLS ARE IN ACCORDANCE WITH ANSI/AWS A2.4-98.

7- WELDING AND NDE SHALL BE IN ACCORDANCE WITH B & PV CODE 1998 EDITION, SECTION III, DIVISION 1, SUBSECTION NB (EXCEPT PART NO 37 AND 39 ON DWG H-2-828041). FULL PENETRATION WELDS AND WELD DETAILS MAY BE SUBMITTED FOR APPROVAL AND USED PENDING WRITTEN CONSENT OF THE BUYER.

8- PIECE/PART TOLERANCES ON THESE DRAWINGS SHOULD LEND TO ACCEPTABLE ASSEMBLY GEOMETRICS. ALTERNATE PIECE/PART TOLERANCES MAY BE UTILIZED WITH THE BUYER'S APPROVAL. ACCEPTABLE FINAL ASSEMBLY GEOMETRICS ARE IN THE FABRICATION SPECIFICATION CRITICAL DIMENSION TABLES/SKETCHES. IN THE EVENT THAT THERE IS A CONFLICT BETWEEN THE SPECIFICATION AND THE DESIGN DRAWINGS, THE BUYER SHALL BE NOTIFIED FOR RESOLUTION.

9- CRITICAL DIMENSIONS ARE IDENTIFIED BY THE SYMBOL $\boxed{\text{CD\_\_}}$ AND ARE LISTED AND DEFINED IN THE FABRICATION SPECIFICATION. METHODS OF MEASUREMENT AND GAUGING ARE ALSO DEFINED IN THE SPECIFICATION.

10- PARTS WITH DUAL MATERIAL DESIGNATION OF 304/304L SHALL MEET THE REQUIREMENTS OF 304L OR F304L AND HAVE THE FOLLOWING PROPERTIES
- MINIMUM YIELD STRENGTH = 30 KSI AT 70°F
- MINIMUM TENSILE STRENGTH = 75 SKI AT 70°F

11- ANY PART THAT REQUIRES 304L DESIGNATION MAY BE REPLACED BY 304/304L DUAL CERTIFIED MATERIAL.

12- ALL PARTS AND MATERAIL AS SPECIFIED OR BUYER APPROVED EQUAL.

13- PROCESS PORTS ARE AS FOLLOWS
- ⟨1⟩ - PLUG/INTERNAL FILTER ASSEMBLY
- ⟨2⟩ - PROCESS VALVE/FILTERED
- ⟨3⟩ - PROCESS VALVE/LONG TUBE
- ⟨4⟩ - PROCESS VALVE/RUPTURE DISK/SHORT TUBE

HNF-SD-SNF-DR-003, Rev. 2,
Appendix 1, MCO Drawings
1-1

DWG NO	TITLE	REF NUMBER	TITLE
		HNF-S-0453	MULTI-CANISTER OVERPACK SPECIFICATION
		H-2-828041	MULTI-CANISTER OVERPACK ASSEMBLY
DRAWING TRACEABILITY LIST		NEXT USED ON	END ITEM

		REVISIONS	
RS 2	GENERAL REVISION PER ECN 648628	2/10 98	2/10/98
1	GENERAL REVISION PER ECN 648626	7/9 98	7/19 98

CADFILE B828040A CADCODE WIN95:AC02:13.0:SS

BT BECKER
JD OSTERLOH
R BASTAR (PM)
G PARKER (QA)
C TEMUS (PE)
R BASTAR (PM)
PARSONS I & T, INC.

U.S. DEPARTMENT OF ENERGY
Richland Operations Office
Duke Engineering & Services Hanford, Inc.

MULTI-CANISTER
OVERPACK
DRAWING LIST

F 212-H 0000 H-2-828040 2

SCALE SHOWN SHEET 1 OF 1

PLOT SCALE: 1=1

GTITLE.DWG (10/96)

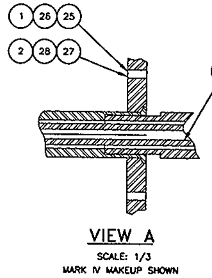

VIEW A

SCALE: 1/3
MARK IV MAKEUP SHOWN

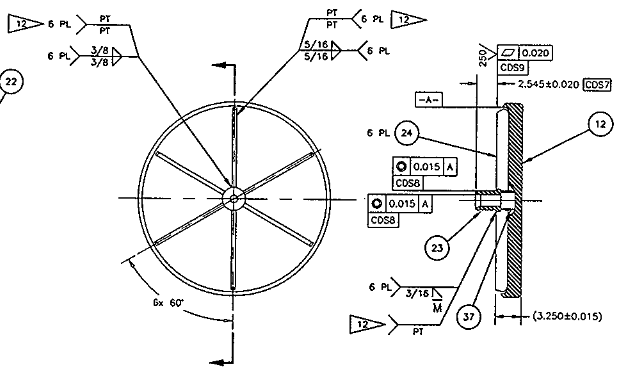

③ BOTTOM PLATE SUBASSEMBLY

SCALE: 1/6

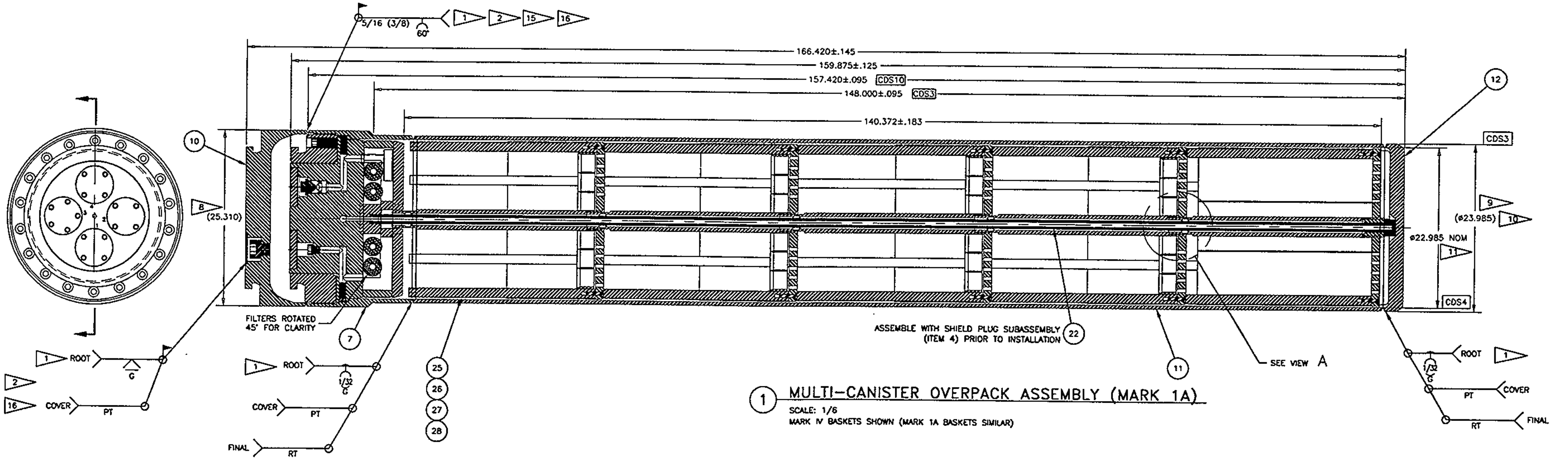

① MULTI-CANISTER OVERPACK ASSEMBLY (MARK 1A)

SCALE: 1/6
MARK IV BASKETS SHOWN (MARK 1A BASKETS SIMILAR)

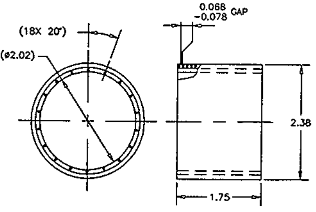

㊲ FILTER SCREEN

SCALE: FULL

PARTS/MATERIAL LIST

QTY REQD -040	-030	-020	-010	PART/DASH NUMBER	NOMENCLATURE/DESCRIPTION	MATERIAL/REFERENCE	SHEET	ITEM NO.
			☒	-010	MULTI-CANISTER OVERPACK ASSY		1	1
		☒						2
	☒	1	1	-030	SUBASSEMBLY, BOTTOM PLATE		1	3
☒		1	1	-040	SUBASSEMBLY, SHIELD PLUG		2	4
								5
1				H-2-828047-004	PROCESS VALVE – PORT ⟨2⟩			6
1				H-2-828042-001	CANISTER COLLAR			7
1				H-2-828042-002	LOCKING & LIFTING RING			8
18				H-2-828042-003	SET SCREW			9
		1	1	H-2-828042-010	CANISTER COVER ASSEMBLY			10
		1	1	H-2-828043-001	SHELL			11
	1			H-2-828044-001	SHELL BOTTOM			12
1				H-2-828045-010	SHIELD PLUG ASSEMBLY			13
1				H-2-828046-001	GUARD PLATE			14
1				H-2-828046-002	GUARD PLATE RING			15
1				H-2-828047-003	PROCESS VALVE – PORT ⟨3⟩			16
1				H-2-828047-010	PROCESS VALVE/RUPTURE DISK ASSEMBLY			17
3				H-2-828048-010	4 HOLE COVER PLATE ASSEMBLY			18
1				H-2-828048-020	5 HOLE COVER PLATE ASSEMBLY			19
1				H-2-828049-010	FILTER MANIFOLD ASSEMBLY			20

CONTINUED ON SHEET 2

FOR GENERAL NOTES SEE H-2-828040
FOR FLAG NOTES SEE SHEET 2

HNF-SD-SNF-DR-003, Rev. 2,
Appendix 1, MCO Drawings
1-2

REV	DESCRIPTION
RS 2	General Revision per ECN 648628
1	General Revision per ECN 648628

REVISIONS

DWG NO	TITLE	REF NUMBER	TITLE
		H-2-828040	DRAWING INDEX
DRAWING TRACEABILITY LIST		NEXT USED ON	END ITEM

REFERENCES

CADFILE B828041A CADCODE WIN95:ACD2:14.0:SS

BT BECKER 5-19-97
JD OSTERLOH 5-19-97
N/A R BASTAR 5-20-97
G PARKER (QA) 5-19-97
C TEMUS (CM) 5-19-97
R BASTAR (PM) 5-20-97
PARSONS I & T, INC.

U.S. DEPARTMENT OF ENERGY
Richland Operations Office
Duke Engineering & Services Hanford, Inc.

MULTI-CANISTER
OVERPACK ASSEMBLY

F 212-H 3902 H-2-828041 2

SCALE SHOWN SHEET 1 OF 3

2 PLOT SCALE: 1=1

1 CTITLE.DWG (10/96)

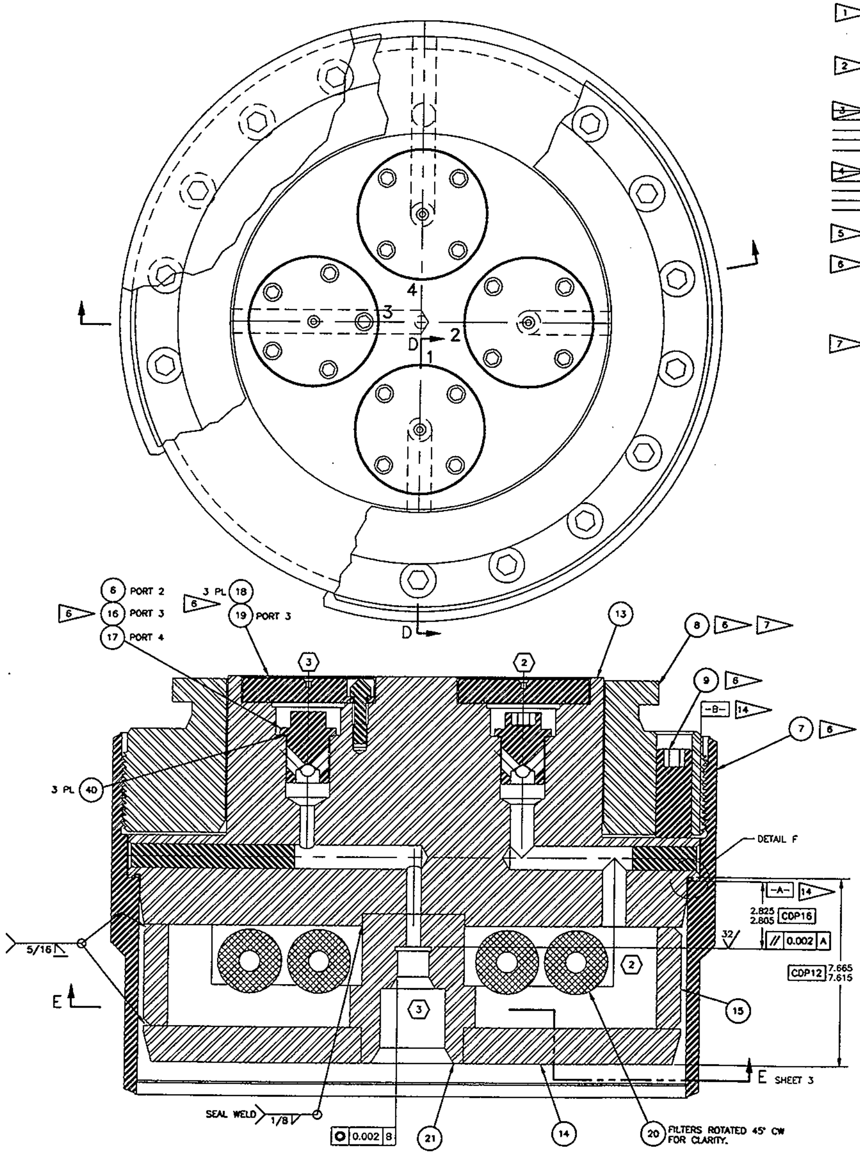

4 SHIELD PLUG SUBASSEMBLY

SCALE: 1/2

1. AVOID EXCESS FILLER METAL DEPOSITS TO LIMIT DISTORTION OF THE SHELL. THE CROWN OF THE WELD SHALL BE MINIMIZED TO NOT INTERFERE WITH THE TRANSFER CASK. GRINDING IS TO BE AVOIDED WHERE POSSIBLE AND MINIMIZED WHERE REQD. ANY GRINDING REQUIRES THICKNESS VERIFICATION.

2. THIS WELD IS SHOWN FOR ILLUSTRATION ONLY. CANISTER COVER (ITEM 10) WILL NOT BE WELDED TO THE MCO UNTIL AFTER COLD VACUUM DRYING AND PLUG COVER WILL NOT BE WELDED TO THE MCO UNTIL TESTING IS COMPLETE.

3. ~~MARK 1A ASSY -010 (ITEM 1). CAN HAVE 6 MARK 1A FUEL BASKET ASSEMBLIES (ITEM 25) OR 5 MARK 1A FUEL BASKET ASSEMBLIES (ITEM 25) WITH 1 MARK 1A SCRAP BASKET ASSEMBLY (ITEM 26). THE SCRAP BASKET ASSEMBLY CAN BE PLACED ON THE TOP OR BOTTOM OF THE BASKET STACK.~~

4. ~~MARK IV ASSY -020 (ITEM 2). CAN HAVE 5 MARK IV FUEL BASKET ASSEMBLIES (ITEM 27) OR 4 MARK IV FUEL BASKET ASSEMBLIES (ITEM 27) WITH 1 MARK IV SCRAP BASKET ASSEMBLY (ITEM 28). THE SCRAP BASKET ASSEMBLY CAN BE PLACED ON THE TOP OR BOTTOM OF THE BASKET STACK.~~

5. SEAL RETAINING SCREWS AND CLIPS ARE SUPPLIED WITH SEAL (ITEM 38).

6. TAKE SPECIAL CARE TO ENSURE THAT THREADS ARE SCRUPULOUSLY CLEAN AND FREE OF BURRS. COAT INTERNAL AND EXTERNAL THREADS WITH NEOLUBE (GRAPHITE/ALCOHOL) LUBRICANT. LUBRICANTS SHALL HAVE A SERVICE TEMPERATURE ABOVE 270°F AND MUST NOT PRODUCE ANY OFF GASSES ABOVE THIS TEMPERATURE. ALL LUBRICANTS SHALL BE APPROVED BY BUYER. TORQUE TO 130 ± 10 FP.

7. WHEN THREADING LOCKING RING INTO COLLAR, USE A LOAD CELL ON A HOISTING DEVICE OR COUNTERWEIGHTS TO ASSIST IN KEEPING WEIGHT OFF OF THREADS. AFTER ASSEMBLY AND TORQUING, THE LOCKING RING (ITEM 8) SHALL BE A MINIMUM OF 1/8" BELOW THE TOP OF THE SHIELD PLUG (ITEM 13).

PARTS/MATERIAL LIST

QTY REQD -040	-030	-020	-010	PART/DASH NUMBER	NOMENCLATURE/DESCRIPTION	MATERIAL/REFERENCE	SHEET	ITEM NO.
1				H-2-828050-001	BASKET STABILIZER EXTENSION			21
		1	1	H-2-828051-001	PROCESS TUBE			22
	1			H-2-828052-001	PROCESS TUBE GUIDE CONE			23
	6			H-2-828053-001	BASKET SUPPORT PLATE			24
			AR	H-2-828060-010	MK 1A SNF STORAGE BASKET (BY OTHERS)			25
			AR	H-2-828065-010	MK 1A SNF SCRAP BASKET (BY OTHERS)			26
		AR		H-2-828070-010	MK IV SNF STORAGE BASKET (BY OTHERS)			27
		AR		H-2-828075-010	MK IV SNF SCRAP BASKET (BY OTHERS)			28
								29
								28
								30
1				-001	PLUG	SA-479, UNS S21800	3	31
AR				-002	ANGLE, 2 X 2 X 1/4	SA-240 OR SA-479 304L SST	3	32
2				-003	PLATE, 2 X 3 X 1/4	SA-240 304L SST	3	33
								34
								35
								36
	1			M098328	FILTER SCREEN, STD ROD-BASE CONST, 63 x 63 WIRE	316/316L SST FAIREY MICROFILTREX	1	37
1				H-305236, REV. NC	SEAL	HELICOFLEX	2	38
1				4319-00	SHORT DRAW TUBE	304/304L SST COOK SCREEN TECHNOLOGIES, INC OR EQUIVALENT	3	39
3				13632	SEAL	EG&G PRESSURE SCIENCE	2	40
1				801A91-0012-A	SEAL	EG&G PRESSURE SCIENCE	2	41
								42
								43
								44

5

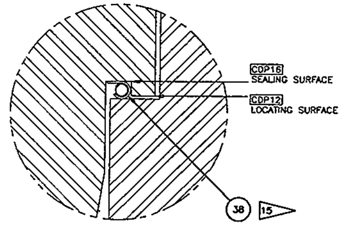

DETAIL F

SCALE: 2/1

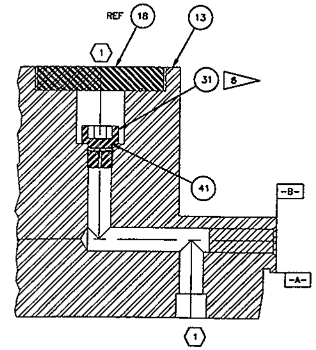

SECTION D-D

SCALE: 1/2

8. OUTSIDE DIAMETER AND STRAIGHTNESS ACROSS CANISTER COLLAR AND CANISTER COVER SHALL BE WITHIN A ⌀25.310 ENVELOPE.

9. OUTSIDE DIAMETER AND STRAIGHTNESS TO COLLAR'S 45° SHOULDER SHALL ALLOW INSERTION INTO A GAGE ⌀24.940 INSIDE DIAMETER AND 149.0 LONG.

10. EXTERNAL OVALITY SHALL NOT EXCEED ⌀24.120 AS MEASURED WITH A RING GAGE MINIMUM LENGTH 4.030.

11. INSIDE DIAMETER AND INTERNAL STRAIGHTNESS SHALL BE VERIFIED BY PASSING A GAGE WITH MINIMUM OD ⌀22.750 AND MINIMUM LENGTH 28.0 THROUGH THE INSIDE OF THE SHELL.

12. USE WATER WASHABLE DYE PENETRANT FOR WELD INSPECTIONS.

13. WELDS ASSOCIATED WITH THE FILTER MANIFOLD MUST BE LEAK TIGHT. COPE END PLATES (ITEM 33) AS NECESSARY TO PROPER FIT.

14. DATUM IDENTIFIERS "A" AND "B" ARE REFERENCED FROM THE SHIELD PLUG SURFACES.

15. LP ROOT AND EACH SUCCESSIVE 0.250 OF WELD THICKNESS AND THE FINAL LAYER SHALL BE PER NB-5000

16. HELIUM LEAK TEST SHALL BE IN ACCORDANCE WITH SECTION V, ARTICLE 10, APPENDIX IV. ACCEPTANCE CRITERIA IS LESS THAN 1×10^{-4} STD CM^3/SEC.

FOR GENERAL NOTES SEE H-2-828040

HNF-SD-SNF-DR-003, Rev. 2,
Appendix 1, MCO Drawings
1-3

DWG NO	TITLE	REF NUMBER	TITLE
		H-2-828040	DRAWING INDEX
DRAWING TRACEABILITY LIST		NEXT USED ON	END ITEM

REV	DESCRIPTION
RS 2	General Revision per ECN 648628
1	General Revision per ECN 648626

REVISIONS

6/99

CADFILE 88280418
CADCODE WIN95:ACD2:14.0:SS

BT BECKER
JD OSTERLOH
N/A R BASTAR
G PARKER (QA)
C TEMUS (CM)
R BASTAR (PM)
PARSONS I & T, INC.

U.S. DEPARTMENT OF ENERGY
Richland Operations Office
Duke Engineering & Services Hanford, Inc.

MULTI-CANISTER
OVERPACK ASSEMBLY

F 212-H 3902 H-2-828041 2

SCALE SHOWN SHEET 2 OF

PLOT SCALE: 1=1

GTITLE.DWG (10/96)

H-2-828041
REV 2
SH 2 OF

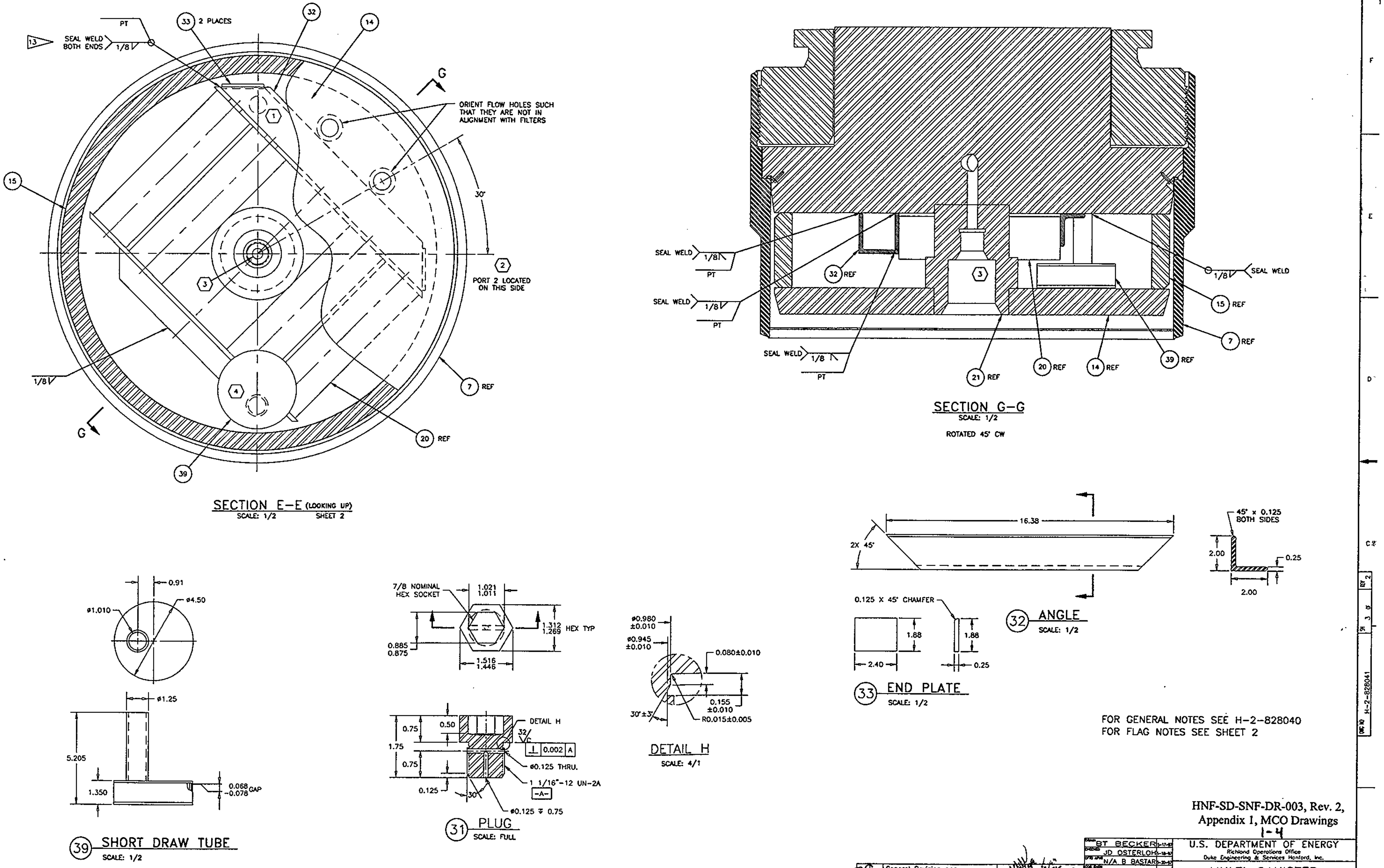

FOR GENERAL NOTES SEE H-2-828040
FOR FLAG NOTES SEE SHEET 2

HNF-SD-SNF-DR-003, Rev. 2,
Appendix 1, MCO Drawings
1-4

U.S. DEPARTMENT OF ENERGY
Richland Operations Office
Duke Engineering & Services Hanford, Inc.

MULTI-CANISTER
OVERPACK ASSEMBLY

BT BECKER	5-17-97	
JD OSTERLOH	5-18-97	
N/A B BASTAR	5-20-97	
G PARKER (QA)		
C TEMUS (CM)		
R BASTAR (PM)		
PARSONS I & T, INC.		

F	212-H	3902	H-2-828041	2	
SCALE SHOWN			SHEET 3 OF		

RS 2	General Revision per ECN 648628	
1	General Revision per ECN 648626	
REV NO	DESCRIPTION	REVISIONS

CADFILE 8828041C CADCODE WIN95:ACD2:14.0:SS

DWG NO	TITLE	REF NUMBER	TITLE
		H-2-828040	DRAWING INDEX
DRAWING TRACEABILITY LIST		NEXT USED ON	END ITEM

2 PLOT SCALE: 1=1

GTITLE.DWG (10/96)

PARTS/MATERIAL LIST

QTY REQD -020	QTY REQD -010	PART/DASH NUMBER	NOMENCLATURE/DESCRIPTION	MATERIAL/REFERENCE	SHEET	ITEM NO.
	☒	-010	CANISTER COVER ASSEMBLY		3	1
☒						2
						3
		-001	CANISTER COLLAR	SA-182 DUAL CERT F304/F304L	1	4
		-002	LOCKING & LIFTING RING	SA-182 F304N	2	5
		-003	SET SCREW, 1 1/2-8 UN-2A	SA-193 B8S or B8SA	2	6
	1	-004	CANISTER COVER	SA-182 F304L	3	7
	1	-006	TEST PLUG	SA-193 B8S OR B8SA	3	8
	1	-007	COVER PLATE, ø4.00	SA-240 OR SA-479 304L	3	9
						10
						11
	1	14119	BOSS C-SEAL, CUSTOM PART	EG&G PRESSURE SCIENCE	3	12

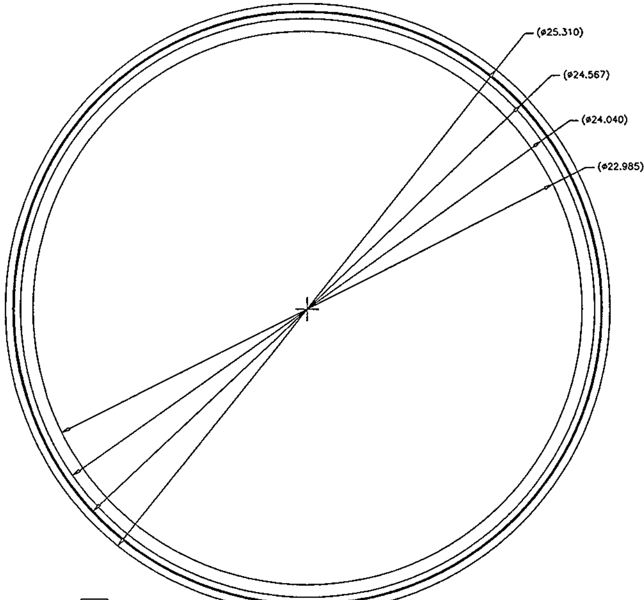

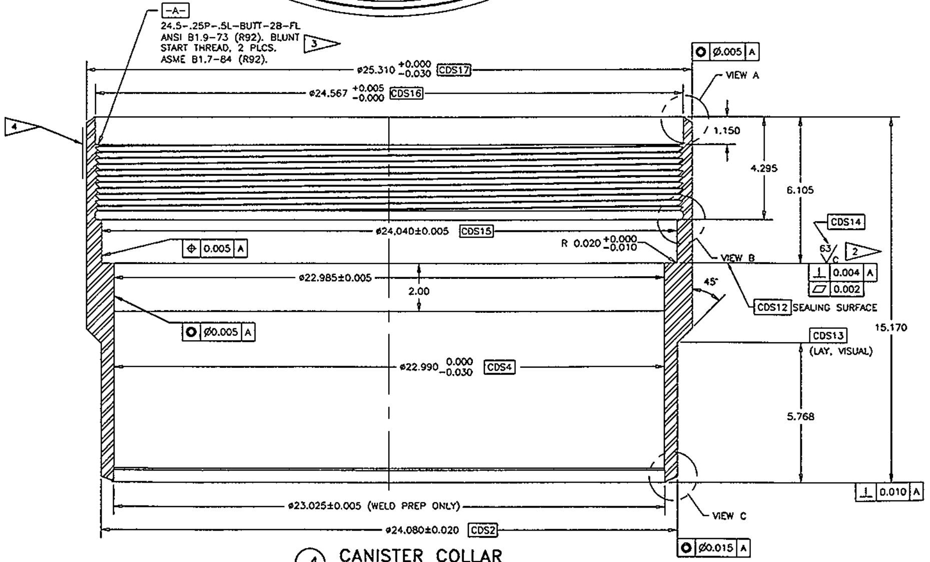

④ CANISTER COLLAR

SCALE: 1/2

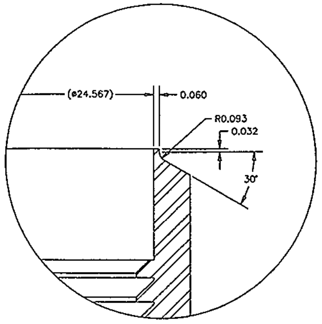

VIEW A

SCALE: 2/1

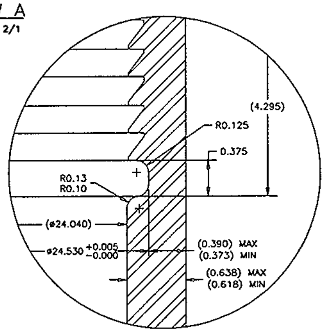

VIEW B

SCALE: 2/1

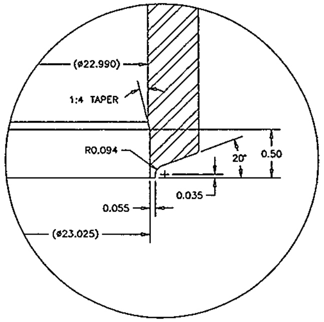

VIEW C

SCALE: 2/1

1. DRILL AND TAP FROM UNDERSIDE OF LOCKING & LIFTING RING (DATUM -A-).
2. THE SEALING FACE MUST BE LATHE TURNED. THE USE OF EMERY CLOTH IS LIMITED TO TOUCHING UP MINOR ACCIDENTAL DEFECTS AND MUST BE PERFORMED BY RUBBING IN LINE WITH THE LAY OF THE TOOL MARKS.
3. BLUNT START THREADS ON THE MCO COLLAR SHALL CONSIST OF 100% AND 50% OF THE THREAD LAND ON THE TOP AND BOTTOM RESPECTIVELY. BLUNT START THREADS ON THE MCO LOCKING RING SHALL CONSIST OF 100% OF THE THREAD LAND ON THE TOP AND BOTTOM. THREADS, REGARDLESS OF THE BLUNT START, SHALL BEGIN AND END AT THE SPECIFIED DIMENSIONS.
4. IDENTIFY PER FABRICATION SPECIFICATION HNF-S-0453 IN APPROXIMATE LOCATION SHOWN.
5. BLUNT START THREADS SHALL BE INCORPORATED ON THE STARTING THREAD AND SHALL CONSIST OF 100% OF THE THREAD LAND. THE TEST PLUG SHALL BE TIGHTENED USING 100 ± 10 FT-LB TORQUE.

FOR GENERAL NOTES SEE H-2-828040

HNF-SD-SNF-DR-003, Rev. 2,
Appendix 1, MCO Drawings
1-5

DWG NO	TITLE	REF NUMBER	TITLE
		H-2-828045	MCO SHIELD PLUG
		H-2-828043	MCO SHELL
DRAWING TRACEABILITY LIST		REFERENCES	
		NEXT USED ON	H-2-828041

	REV NO	DESCRIPTION
RS	2	General Revision per ECN 648628
	1	General Revision per ECN 648626

REVISIONS

CADFILE B828042A CADCODE WIN95:AC02:14.0:SS

BT BECKER
JD OSTERLOH
N/A R BASTAR
G PARKER (QA)
C TEMUS (CM)
R BASTAR
PARSONS I & T, INC.

U.S. DEPARTMENT OF ENERGY
Richland Operations Office
Duke Engineering & Services Hanford, Inc.

MCO MECHANICAL
CLOSURE

F 212-H 3902 H-2-828042 2

SCALE SHOWN SHEET 1 OF 3

PLOT SCALE: 1=1

GTITLE.DWG (10/96)

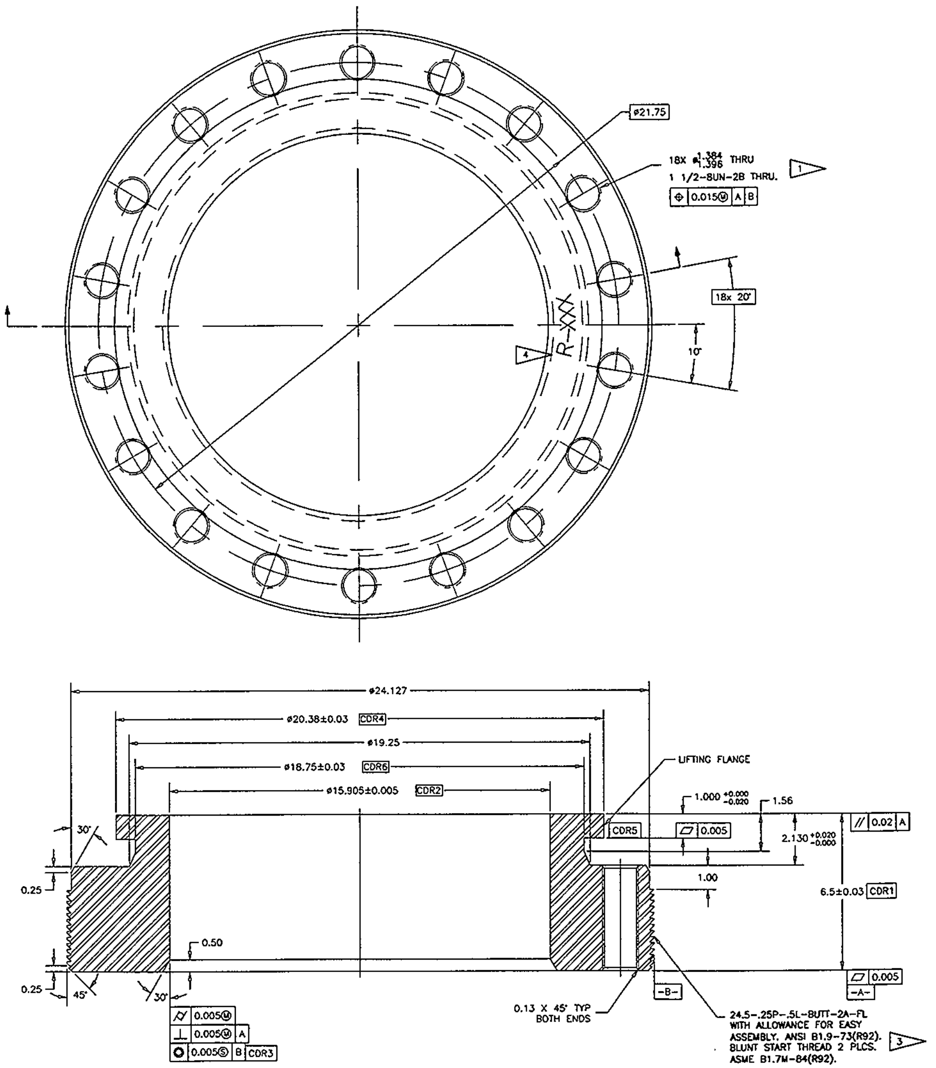

⑤ LOCKING & LIFTING RING

PARTIALLY ROTATED 10° CW
SCALE: 1/2

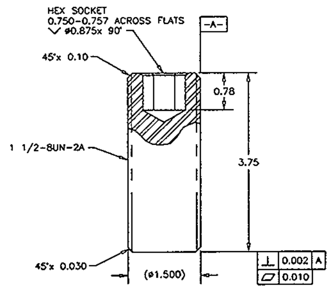

⑥ SET SCREW

FOR GENERAL NOTES SEE H-2-828040
FOR FLAG NOTES SEE SHEET 1

HNF-SD-SNF-DR-003, Rev. 2,
Appendix 1, MCO Drawings
1-6

		H-2-828045	MCO SHIELD PLUG
		REF NUMBER	TITLE
DWG NO	TITLE		REFERENCES
DRAWING TRACEABILITY LIST		NEXT USED ON	H-2-828041

RS	2	General Revision per ECN 648628	2/10/98			
	1	General Revision per ECN 648626	7/10/98	7/10/98	7/10/98	7/10/98
	REV NO	DESCRIPTION	REV BY DATE	CHD by	QA/ PM	OWNER / COMPANY

REVISIONS

CADFILE B828042B
CADCODE WIN95:ACD2:14.0:SS

BT BECKER 5-17-97
JD OSTERLOH 5-19-97
N/A R BASTAR 5-20-97
G PARKER 5-19-97
C TEMUS 5-19-97
R BASTAR 5-20-97
PARSONS I & T, INC.

U.S. DEPARTMENT OF ENERGY
Richland Operations Office
Duke Engineering & Services Hanford, Inc.

MCO MECHANICAL
CLOSURE

F 212-H 3902 H-2-828042 2

SCALE SHOWN
SHEET 2 OF

2 PLOT SCALE: 1=1
GTITLE.DWG (10/96)

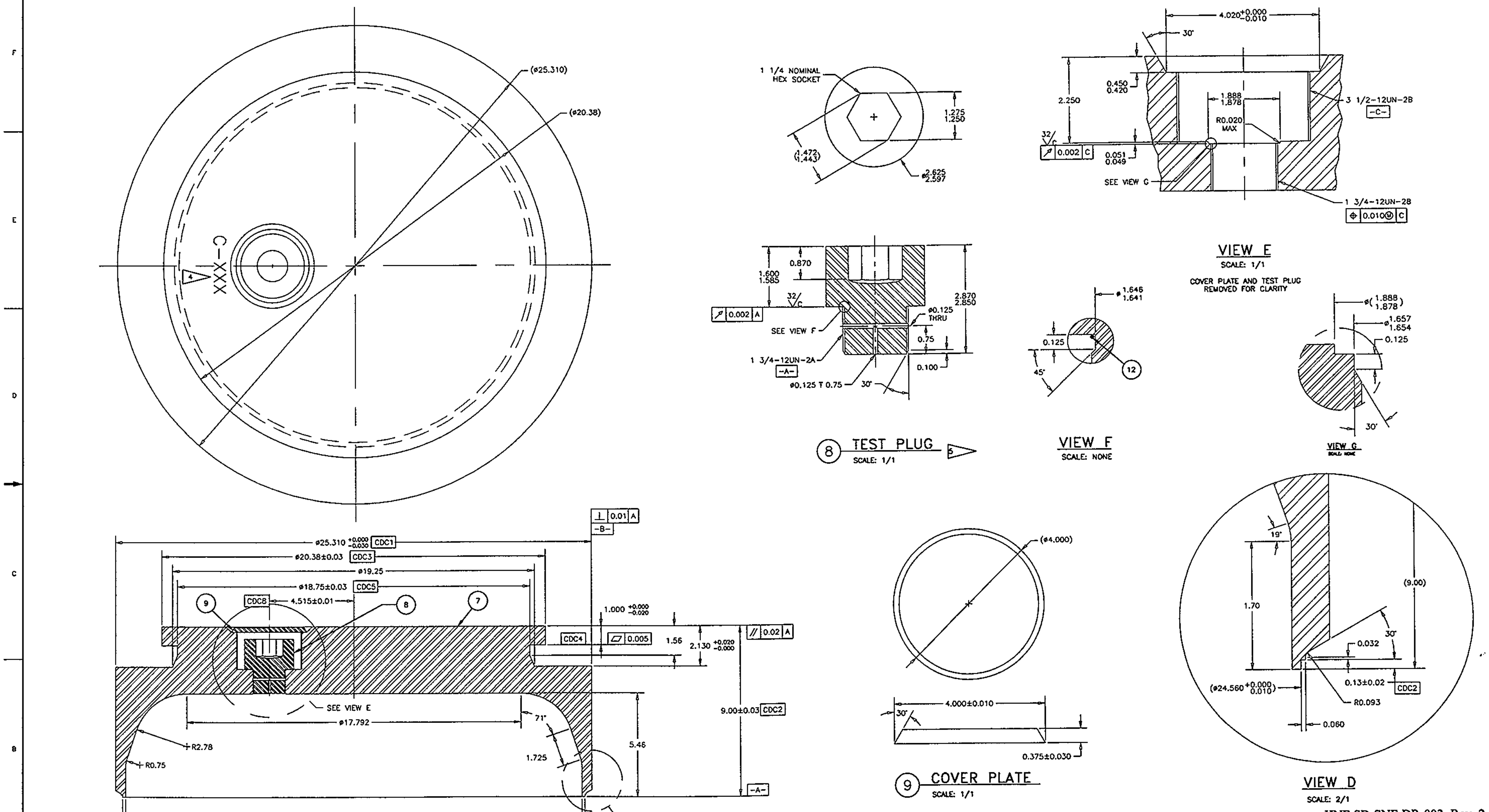

① CANISTER COVER ASSEMBLY
SCALE: 1/2

⑧ TEST PLUG
SCALE: 1/1

VIEW E
SCALE: 1/1
COVER PLATE AND TEST PLUG REMOVED FOR CLARITY

VIEW F
SCALE: NONE

VIEW G
SCALE: NONE

⑨ COVER PLATE
SCALE: 1/1

VIEW D
SCALE: 2/1

HNF-SD-SNF-DR-003, Rev. 2,
Appendix 1, MCO Drawings
1-7

FOR GENERAL NOTES SEE H-2-828040
FOR FLAG NOTES SEE SHEET 1

DWG NO	TITLE	REF NUMBER	TITLE
		NEXT USED ON	H-2-828041
DRAWING TRACEABILITY LIST			REFERENCES

	REV NO	DESCRIPTION
RS	2	General Revision per ECN 648628
	1	General Revision per ECN 648626

REVISIONS

CADFILE B828042C
CADCODE WIN95:ACD2:14.0:SS

BT BECKER 5-18-97
JD OSTERLOH 5-18-97
N/A R BASTAR 5-20-97
G PARKER 5-18-97
C TEMUS 5-19-97
R BASTAR 5-20-97
PARSONS I & T, INC.

U.S. DEPARTMENT OF ENERGY
Richland Operations Office
Duke Engineering & Services Hanford, Inc.

MCO MECHANICAL CLOSURE

BLDG NO	INDEX NO	DWG NO	REV
212-H	3902	H-2-828042	2

SCALE SHOWN
SHEET 3 OF

PLOT SCALE: 1=1
GTITLE.DWG (10/96)

DWG NO H-2-828042 SH 3 OF REV 2

1 SHELL MAY BE SEAMLESS OR WELDED PIPE, SA-312 DUAL CERTIFIED TP 304/304L, NPS, SCHED 80S. WELDED PIPE SHALL HAVE LONGITUDINAL WELD AS SHOWN IN SECTION A-A.

2 SEE SHELL (WITH COLLAR) STRAIGHTNESS REQUIREMENTS ON DRAWING H-2-828041, SHEET 2 (FLAG NOTES 8 THRU 11).

3 MINIMUM WALL THICKNESS SHALL BE 100% VERIFIED.

PARTS/MATERIAL LIST

QTY REQD -020	QTY REQD -010	PART/DASH NUMBER	NOMENCLATURE / DESCRIPTION	MATERIAL / REFERENCE	SHEET	ITEM NO.
		-001	SHELL (24 ø NOM)	SA-240 DUAL CERT 304/304L SST		1

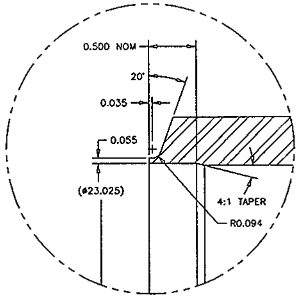

VIEW B
SCALE: 2/1

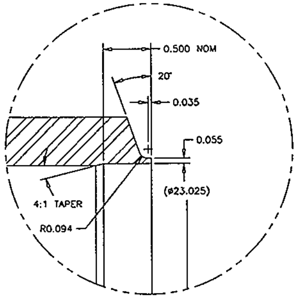

VIEW C
SCALE: 2/1

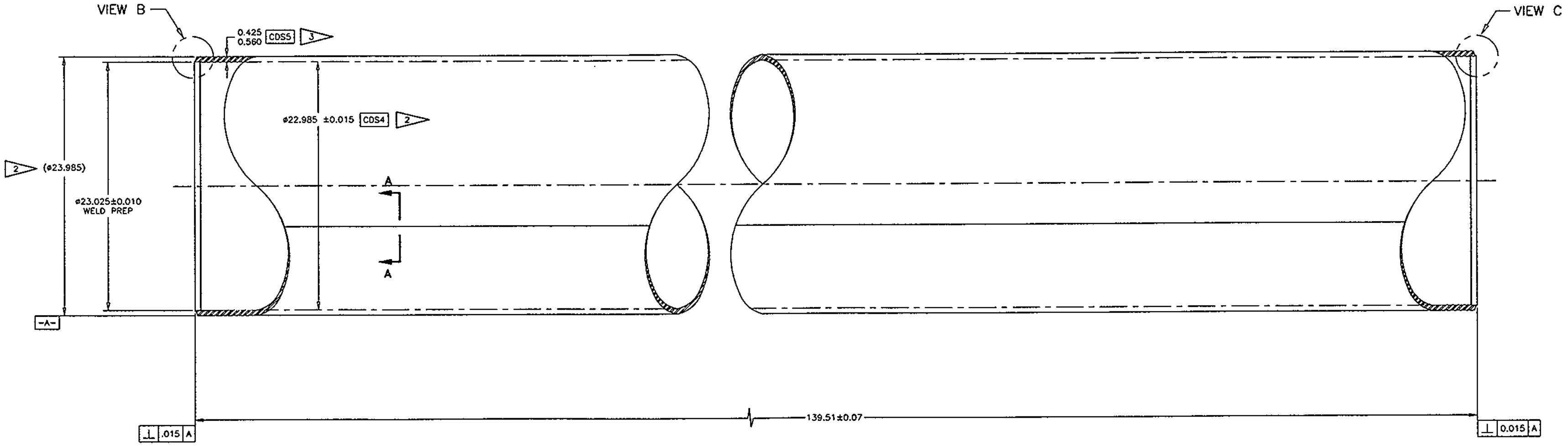

① SHELL
SCALE: 1/4

FOR GENERAL NOTES SEE H-2-828040

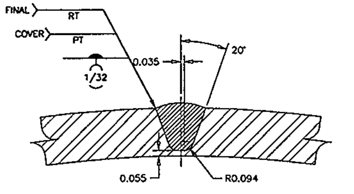

SECTION A-A LONGITUDINAL SEAM WELD
(ROTATED 90° CW)
SCALE: 2/1

HNF-SD-SNF-DR-003, Rev. 2,
Appendix 1, MCO Drawings
1-8

		H-2-828044	MCO SHELL BOTTOM
		H-2-828042	MCO MECHANICAL CLOSURE
		REF NUMBER	TITLE
DWG NO	TITLE	REFERENCES	
DRAWING TRACEABILITY LIST		NEXT USED ON	H-2-828041

RS	2	General Revision per ECN 648628
	1	General Revision per ECN 648626
	REV NO	DESCRIPTION
REVISIONS		

CADFILE B828043A CADCODE WIN95:ACD2:14.0:SS

BT BECKER 5-19-97
JD OSTERLOH 5-19-97
N/A R BASTAR 5-20-97
G PARKER 5-19-97
C TEMUS 5-19-97
R BASTAR 5-20-97
PARSONS I & T, INC.

U.S. DEPARTMENT OF ENERGY
Richland Operations Office
Duke Engineering & Services Hanford, Inc.

MCO SHELL

F 212-H 3902 H-2-828043 REV 2
SCALE SHOWN SHEET 1 OF 1

PLOT SCALE: 1=1
GTITLE.DWG (10/96)

PARTS/MATERIAL LIST

QTY REQD -020	QTY REQD -010	PART/DASH NUMBER	NOMENCLATURE/DESCRIPTION	MATERIAL/REFERENCE	SHEET	ITEM NO.
		-001	SHELL BOTTOM	SA-182 F304L OR SA-240 304L	1	1

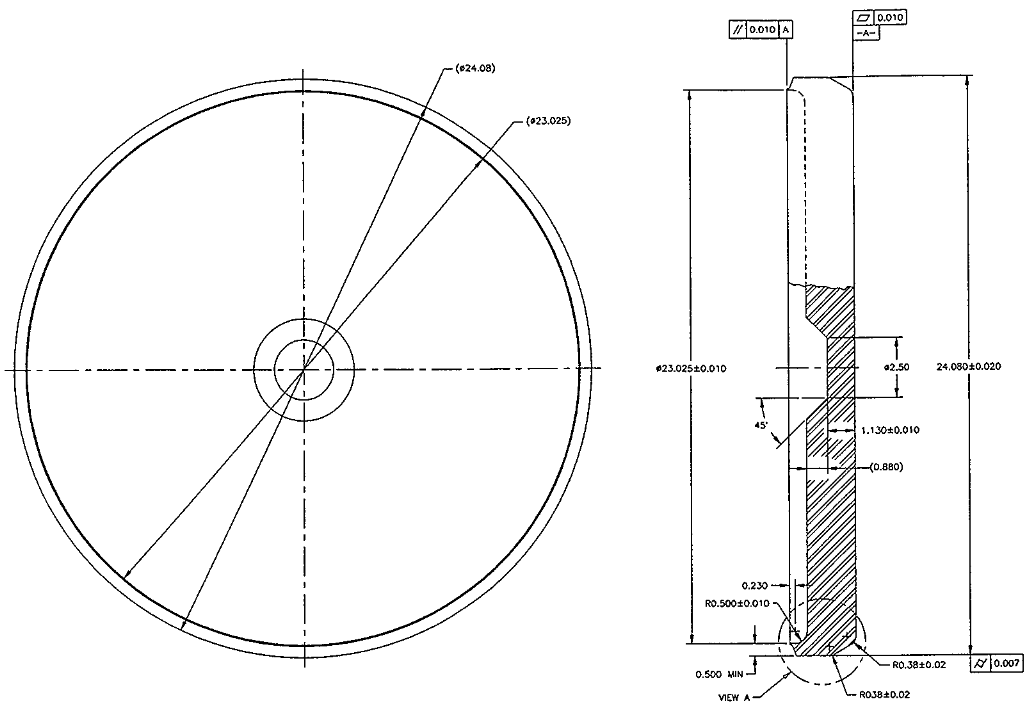

① SHELL BOTTOM
SCALE: 1/2

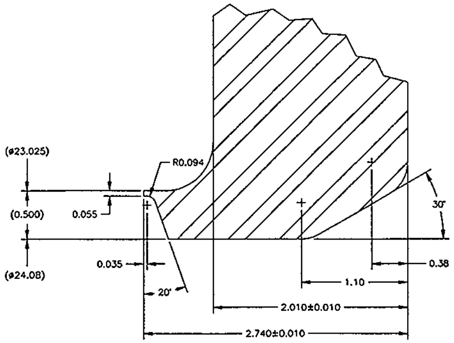

VIEW A
SCALE: 2/1

FOR GENERAL NOTES SEE H-2-828040

HNF-SD-SNF-DR-003, Rev. 2,
Appendix 1, MCO Drawings
1-9

DWG NO	TITLE
DRAWING TRACEABILITY LIST	

REF NUMBER	TITLE
H-2-828052	MCO DIP TUBE GUIDE CONE
H-2-828043	MCO SHELL FOR MECHANICAL CLOSURE
H-2-828053	MCO BASKET SUPPORT PLATE
NEXT USED ON	H-2-828041

REFERENCES

REV NO	DESCRIPTION
RS 2	General Revision per ECN 648628
1	General Revision per ECN 648626

REVISIONS

CADFILE B828044A
CADCODE WIN95:ACD2:14.0:SS

DRAWN	BT BECKER	5-17-97
CHECKED	JD OSTERLOH	5-19-97
SPEC APPD	N/A R BASTAR	5-20-97
APPD	G PARKER	5-19-97
APPD	C TEMUS	5-19-97
APPD	R BASTAR	5-20-97
DESIGN AGENT	PARSONS I & T, INC.	

U.S. DEPARTMENT OF ENERGY
Richland Operations Office
Duke Engineering & Services Hanford, Inc.

MCO SHELL BOTTOM

SIZE	BLDG NO	INDEX NO	DWG NO	REV
F	212-H	3902	H-2-828044	2

SCALE SHOWN SHEET 1 OF 1

2 PLOT SCALE: 1=1

1 GTITLE.DWG (10/96)

DWG NO H-2-828044 SH 1 OF 1 REV 2

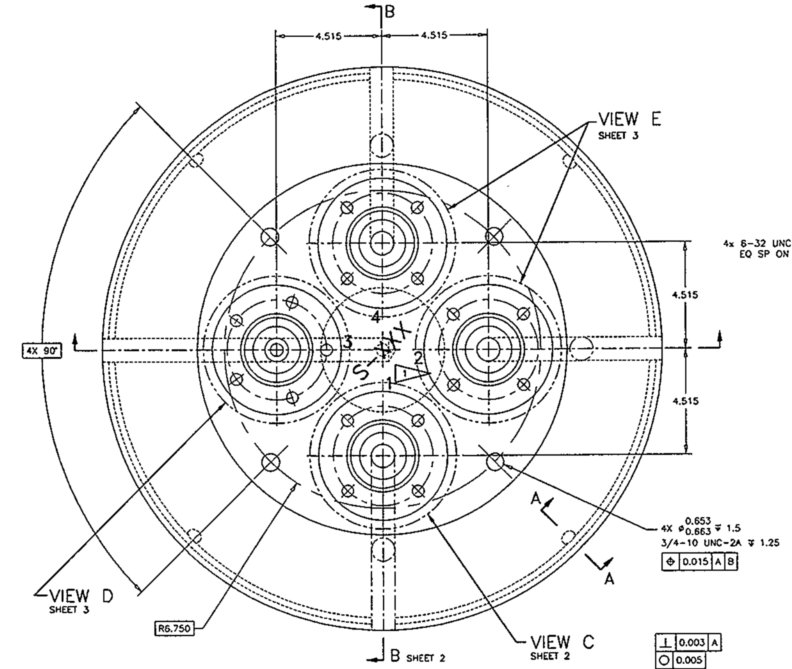

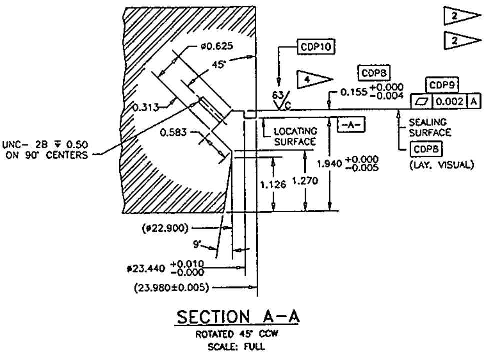

SECTION A-A
ROTATED 45° CCW
SCALE: FULL

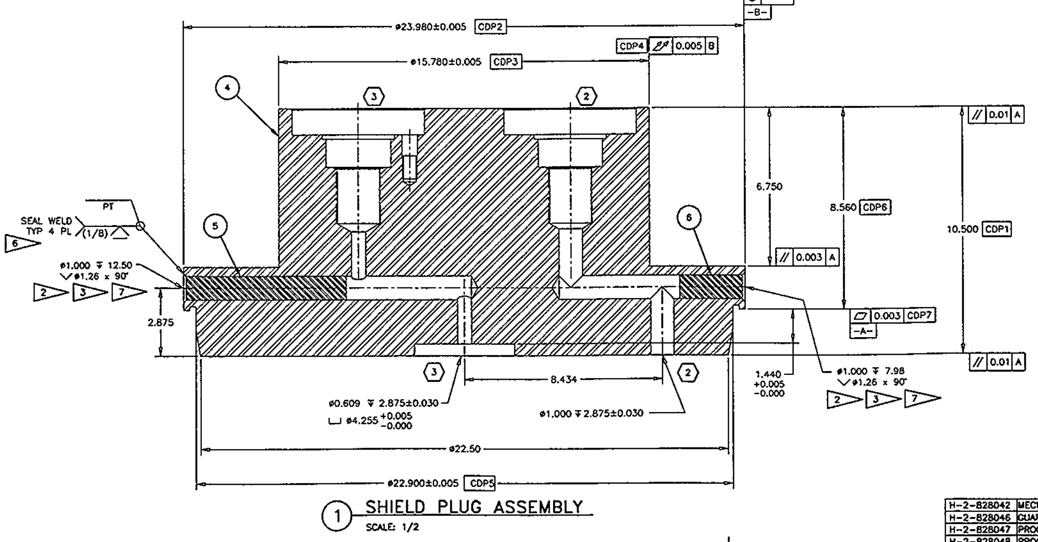

① SHIELD PLUG ASSEMBLY
SCALE: 1/2

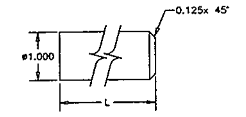

⑤⑥ RADIAL PLUG 2
SCALE: FULL

PARTS/MATERIAL LIST

QTY REQD -020	QTY REQD -010	PART/DASH NUMBER	NOMENCLATURE / DESCRIPTION	MATERIAL/REFERENCE	SHEET	ITEM NO.
	☒	-010	SHIELD PLUG ASSEMBLY		1	1
						2
						3
	1	-001	SHIELD PLUG	SA 182 F304L SST	1	4
	1	-002	RADIAL PLUG, ø1.00X 6.9 L	SA-479 304L SST	1	5
	3	-003	RADIAL PLUG, ø1.00X 2.7 L	SA-479 304L SST	1	6
						7

1. IDENTIFY PER FABRICATION SPECIFICATION HNF-S-0453 IN APPROXIMATE LOCATION SHOWN.
2. FABRICATOR MAY USE DOWEL OR THREADED PLUG PER SA-240 OR SA-479 304L STAINLESS STEEL TO FACILITATE WELD. IF DOWEL IS USED, MATE PARTS IN ACCORDANCE WITH A LC4 CLEARANCE LOCATIONAL FIT, ANSI B4.1-67 (R94).
3. COUNTERSINK AS REQUIRED FOR 0.125 MIN WELD PREP.
4. THE SEALING FACE MUST BE LATHE TURNED. THE USE OF EMERY CLOTH IS LIMITED TO TOUCHING UP MINOR ACCIDENTAL DEFECTS AND MUST BE PERFORMED BY RUBBING IN LINE WITH THE LAY OF THE TOOL MARKS.
5. DRILL, TAP AND COUNTER BORE DEPTHS, AS WELL AS PROJECTED TOLERANCING, ARE REFERENCED FROM DATUM PLANES "C", "E", AND "G".
6. SHIELD PLUG CIRCUMFERENCE AFFECTED BY RADIAL PLUG WELDS MAY BE RECESSED UP TO 0.060.
7. STAMP PART NO. 5 HEAD WITH LETTER DESIGNATION "L". STAMP PART NO. 6 HEAD WITH LETTER DESIGNATION "S". STAMP PART NO. 4 ADJACENT TO RESPECTIVE HOLES WITH LETTER DESIGNATION "L" FOR PORT NO. 3 AND "S" FOR PORT NO. 1, 2, AND 4.

FOR GENERAL NOTES SEE H-2-828040

HNF-SD-SNF-DR-003, Rev. 2,
Appendix 1, MCO Drawings
1-10

REF NUMBER	TITLE
H-2-828042	MECHANICAL CLOSURE ASSY
H-2-828046	GUARD PLATE AND RING
H-2-828047	PROCESS VALVES
H-2-828048	PROCESS PORT FLANGES
H-2-828049	INTERNAL FILTER ASSY
H-2-828050	BASKET STABILIZER EXTENSION

REFERENCES
NEXT USED ON H-2-828041

DWG NO | TITLE
DRAWING TRACEABILITY LIST

REV NO	DESCRIPTION
RS 2	General Revision per ECN 648628
1	General Revision per ECN 648626

REVISIONS
CADFILE 8828045A
CADCODE WIN95:AC02:14.0:SS

BT BECKER
JD OSTERLOH
N/A R BASTAR
G PARKER
C TEMUS
R BASTAR
PARSONS I & T, INC.

U.S. DEPARTMENT OF ENERGY
Richland Operations Office
Duke Engineering & Services Hanford, Inc.

MCO MECHANICAL
CLOSURE SHIELD PLUG

F 212-H 3902 H-2-828045 2
SCALE SHOWN
SHEET 1 OF 3
PLOT SCALE: 1=1
GTITLE.DWG (10/96)

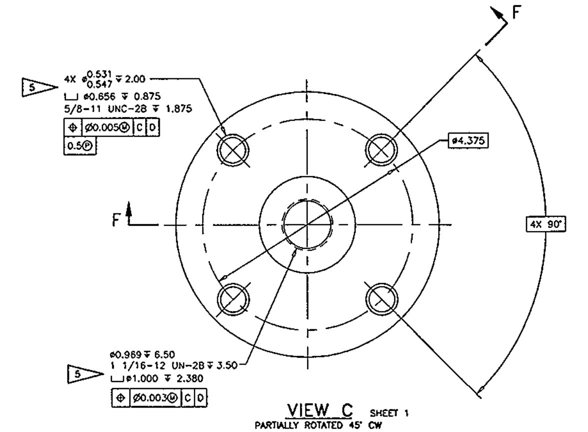

VIEW C SHEET 1
PARTIALLY ROTATED 45° CW
SCALE: FULL
PLUG/INTERNAL FILTER ASSEMBLY PORT ①

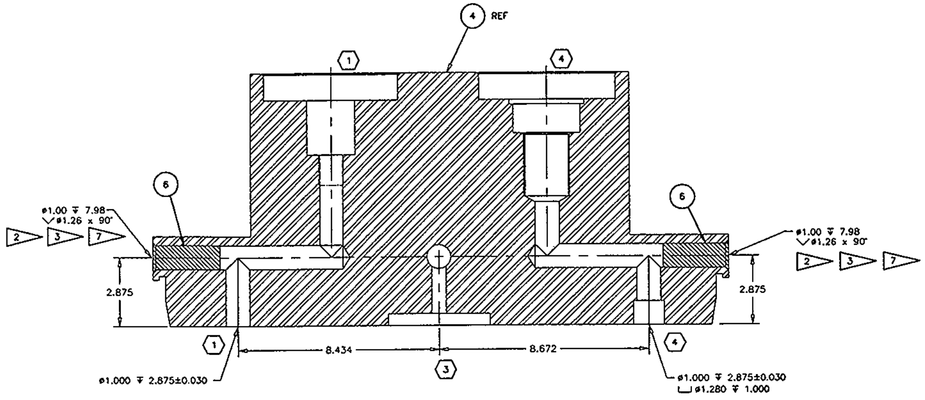

SECTION B-B SHEET 1
ROTATED 90° CCW
SCALE: 1/2 SIZE

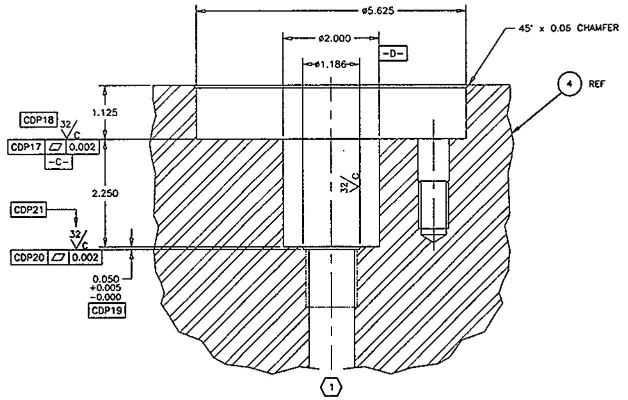

SECTION F-F
PARTIALLY ROTATED 45° CW

FOR GENERAL NOTES SEE H-2-828040
FOR FLAG NOTES SEE SHEET 1

REV	DESCRIPTION				
2	General Revision per ECN 648628	2/18/98			
1	General Revision per ECN 648626	7/3/96	7/16/96	7/16/96	7/16/96

REVISIONS

CADFILE B8280458 CADCODE WIN95:ACD2:14.0:SS

BT BECKER
JD OSTERLOH
N/A R BASTAR
G PARKER
C TEMUS
R BASTAR
PARSONS I & T, INC.

U.S. DEPARTMENT OF ENERGY
Richland Operations Office
Duke Engineering & Services Hanford, Inc.

MCO MECHANICAL
CLOSURE SHIELD PLUG

F 212-H 3902 H-2-828045 2
SCALE SHOWN SHEET 2 OF

PLOT SCALE: 1=1
GTITLE.DWG (10/96)

DWG NO	TITLE	REF NUMBER	TITLE
DRAWING TRACEABILITY LIST		NEXT USED ON	REFERENCES

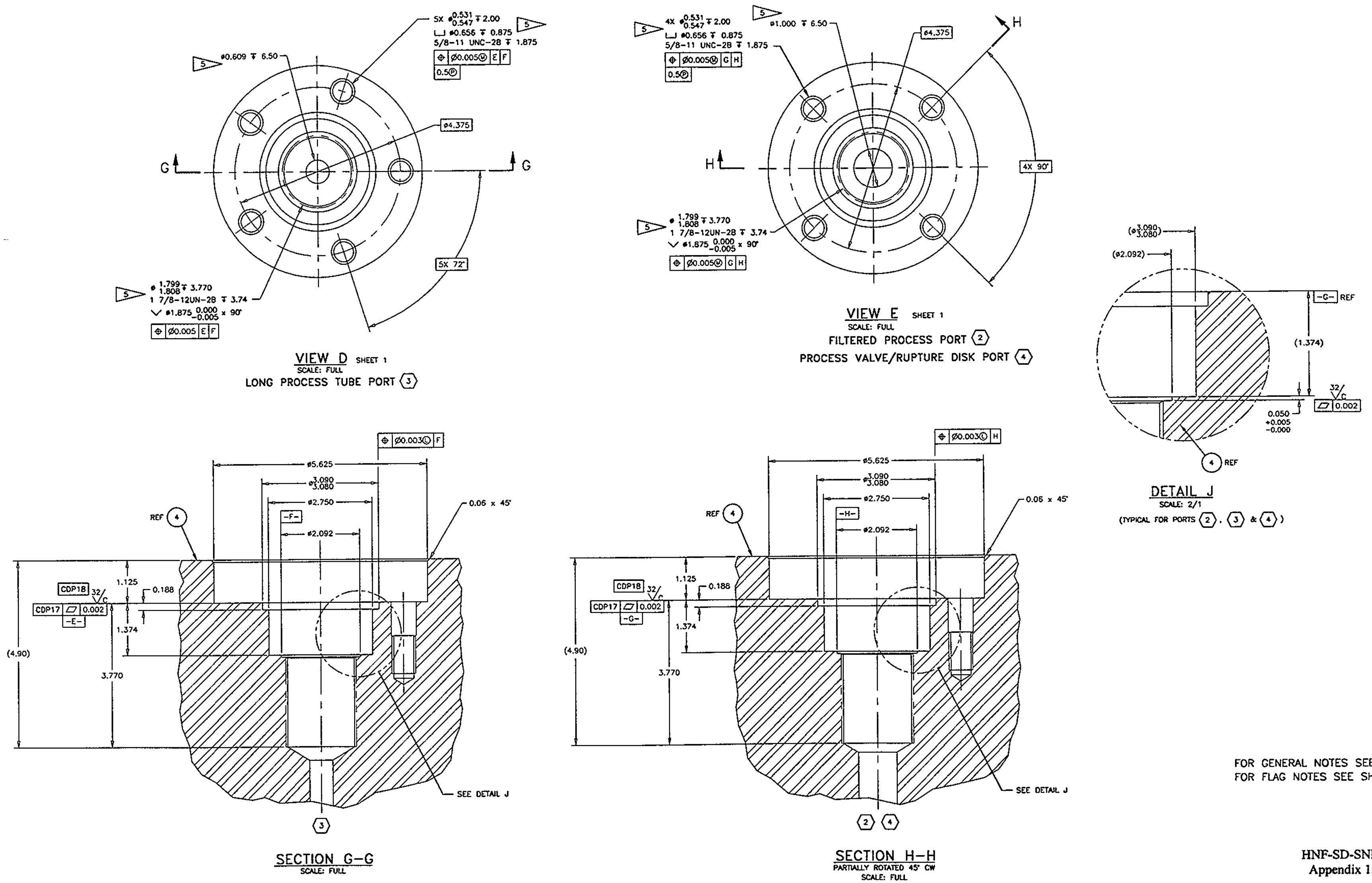

FOR GENERAL NOTES SEE H-2-828040
FOR FLAG NOTES SEE SHEET 1

HNF-SD-SNF-DR-003, Rev. 2,
Appendix 1, MCO Drawings
1-12

REV NO	DESCRIPTION				
2	General Revision per ECN 648628				
1	General Revision per ECN 648626	7/16/98	7/16/98	7/16/98	7/16/98

RS

REVISIONS

BT BECKER 5-15-97
JD OSTERLOH 5-15-97
N/A R BASTAR 5-20-97
G PARKER 5-15-97
C TEMUS 5-19-97
R BASTAR 5-20-97

U.S. DEPARTMENT OF ENERGY
Richland Operations Office
Duke Engineering & Services Hanford, Inc.

MCO MECHANICAL
CLOSURE SHIELD PLUG

F 212-H 3902 H-2-828045 2

PARSONS I & T, INC. SCALE SHOWN SHEET 3 OF

CADFILE 8828045C CADCODE WIN95:AC02:14.0:SS

2 PLOT SCALE: 1=1

GTITLE.DWG (10/96)

DWG NO	TITLE	REF NUMBER	TITLE
DRAWING TRACEABILITY LIST		NEXT USED ON	REFERENCES

DWG NO H-2-828045 SH 3 OF REV 2

PARTS/MATERIAL LIST

QTY REQD -020	QTY REQD -010	PART/DASH NUMBER	NOMENCLATURE/DESCRIPTION	MATERIAL/REFERENCE	SHEET	ITEM NO.
		-001	GUARD PLATE	SA-182 F304L OR SA-240 304L SST	1	1
		-002	GUARD PLATE RING	SA-182 F304L OR SA-240 304L SST	1	2
						3
						4
						5

FLAG NOTES

1 WELD CALLOUTS ARE IDENTIFIED ON H-2-828041.

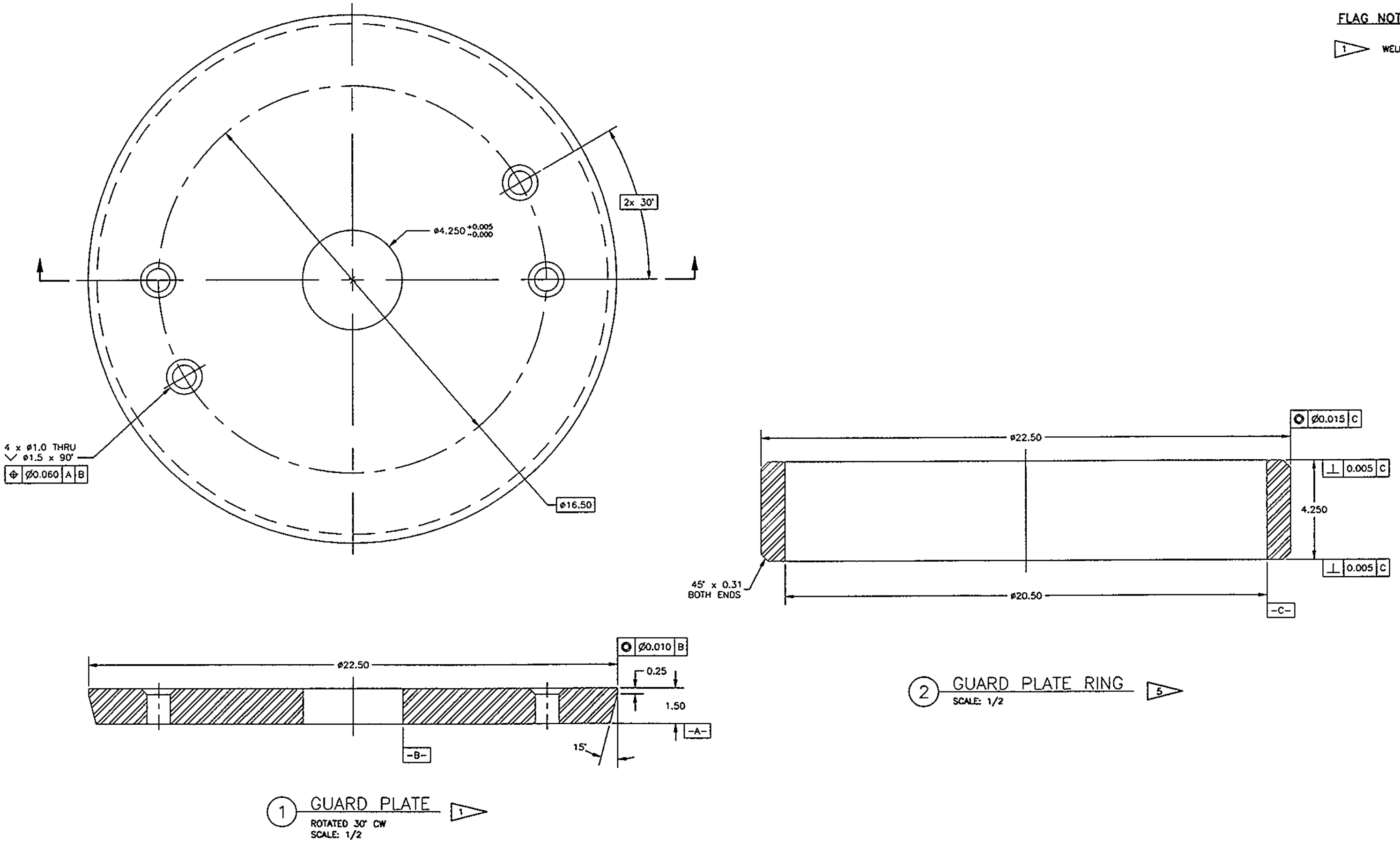

① GUARD PLATE 1
ROTATED 30° CW
SCALE: 1/2

② GUARD PLATE RING 5
SCALE: 1/2

FOR GENERAL NOTES SEE H-2-828040

HNF-SD-SNF-DR-003, Rev. 2,
Appendix 1, MCO Drawings
1-13

DWG NO	TITLE

DRAWING TRACEABILITY LIST

REF NUMBER	TITLE
H-2-828045	MCO SHIELD PLUG
H-2-828050	BASKET STABILIZER

REFERENCES

NEXT USED ON H-2-828041

REV NO	DESCRIPTION
RS 2	General Revision per ECN 648628
1	General Revision per ECN 648626

REVISIONS

CADFILE B828046A
CADCODE WIN95:AC02:14.0:SS

DRAWN B BECKER 5-17-97
CHECKED JD OSTERLOH 5-19-97
N/A R BASTAR 5-20-97
G PARKER (QA) 5-19-97
C TEMUS (CM) 5-19-97
R BASTAR (PM) 5-20-97
PARSONS I & T, INC.

U.S. DEPARTMENT OF ENERGY
Richland Operations Office
Duke Engineering & Services Hanford, Inc.

MCO INTERNAL FILTER
GUARD

F 212-H 3902 H-2-828046 REV 2
SCALE SHOWN
SHEET 1 of 1

PLOT SCALE: 1=1
GTITLE.DWG (10/96)

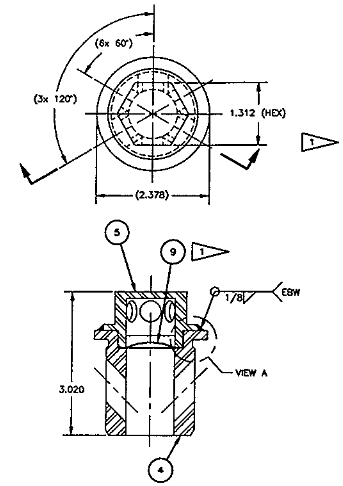

① PROCESS VALVE/ RUPTURE DISC ASSEMBLY
SCALE: FULL

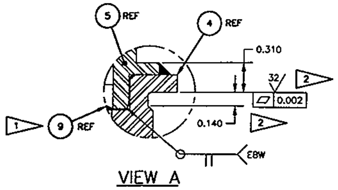

VIEW A
SCALE: 2/1

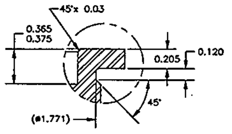

VIEW B
SCALE: 2/1

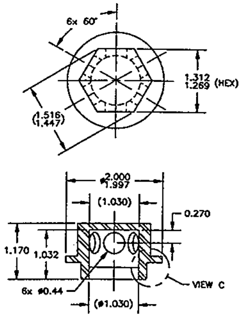

⑤ VALVE NUT
SCALE: FULL

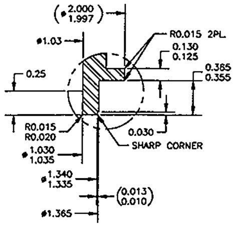

VIEW C
SCALE: 2/1

QTY REQD -020	QTY REQD -010	PART/DASH NUMBER	NOMENCLATURE/DESCRIPTION	MATERIAL/REFERENCE	SHEET	ITEM NO
	☒	-010	PROCESS VALVE/RUPTURE DISK ASSEMBLY		1	1
						2
						3
	1	-001	VALVE BODY	SA-193 B8S OR B8SA	1	4
	1	-002	VALVE NUT	SA-193 B8S OR B8SA	1	5
		-003	PROCESS VALVE - PORT ⟨3⟩	SA-193 B8S OR B8SA	1	6
		-004	PROCESS VALVE - PORT ⟨2⟩	SA-193 B8S OR B8SA	1	7
						8
	1		RUPTURE DISK	NI 200 ASME SB-162	1	9

NOTES

1. FABRICATION, WELDING AND INSPECTION SHALL BE IN ACCORDANCE WITH ASME SECTION III DIVISION I SUBSECTION NB AND SECTION IX, 1998.

FLAG NOTES

1 RUPTURE DISK MUST MEET ASME B & PV CODE SECTION III, DIVISION 1, SUBSECTION NB, 1998. DISK MUST BE CERTIFIED AT 150 PSIG BURST PRESSURE AT 270°F. ⌀1.000 NOMINAL, ⌀1.365 OD OF LIP.

2 FINAL MACHINING PERFORMED AFTER WELDING.

3 BLUNT START THREADS SHALL BE INCORPORATED ON THE STARTING THREAD AND SHALL CONSIST OF 100% OF THE THREAD LAND.

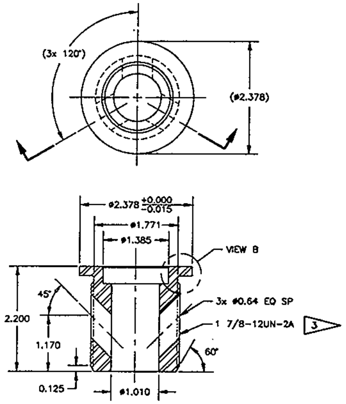

④ VALVE BODY
SCALE: FULL

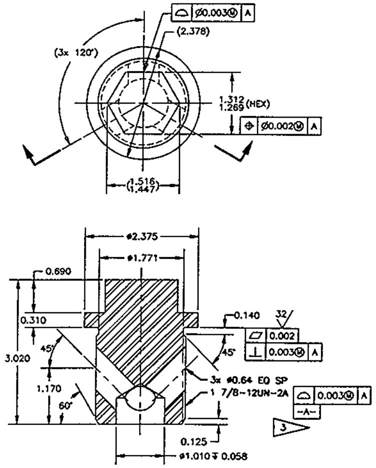

⑥ PROCESS VALVE - PORT 3
SCALE: FULL

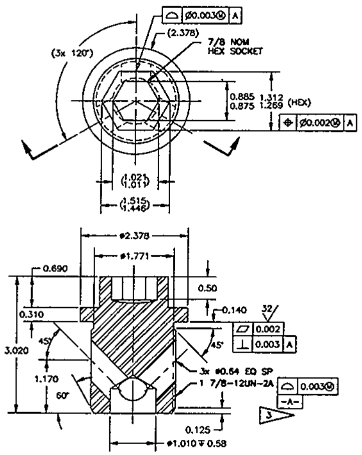

⑦ PROCESS VALVE - PORT 2
SCALE: FULL

FOR GENERAL NOTES SEE H-2-828040

HNF-SD-SNF-DR-003, Rev. 2,
Appendix 1, MCO Drawings

1-14

DWG NO	TITLE	REF NUMBER	TITLE
		H-2-828045	MCO SHIELD PLUG

DRAWING TRACEABILITY LIST
REFERENCES
NEXT USED ON H-2-828041

	REV NO	DESCRIPTION
RS	2	General Revision per ECN 648628
	1	General Revision per ECN 648626

REVISIONS

CADFILE B828047A
CADCODE WIN95:ACD2:14.0:SS

BT BECKER
JD OSTERLOH
RA BASTAR
G PARKER (QA)
C TEMUS (CE)
R BASTAR (PM)
PARSONS I & T, INC.

U.S. DEPARTMENT OF ENERGY
Richland Operations Office
Duke Engineering & Services Hanford, Inc.

MCO PROCESS VALVES

F | 212-H | 3902 | H-2-828047 | 2

SCALE SHOWN
SHEET 1 OF 1

PLOT SCALE: 1=1
GTITLE.DWG (10/96)

QTY REQD -020	QTY REQD -010	PART/DASH NUMBER	NOMENCLATURE/DESCRIPTION	MATERIAL/REFERENCE	SHEET	ITEM NO
	☒	-010	4 HOLE COVER PLATE ASSEMBLY			1
☒		-020	5 HOLE COVER PLATE ASSEMBLY			2
						3
						4
	1	-001	4 HOLE COVER PLATE	SA-240 OR SA-479 304L SST	1	5
1		-002	5 HOLE COVER PLATE	SA-240 OR SA-479 304L SST	1	6
5	4	-003	COVER BOLT, 5/8-11 UNC-2A	SA-193 GR B8S OR B8SA	1	7
						8
						9
1	1	13503	SEAL	EG&G PRESSURE SCIENCE	1	10

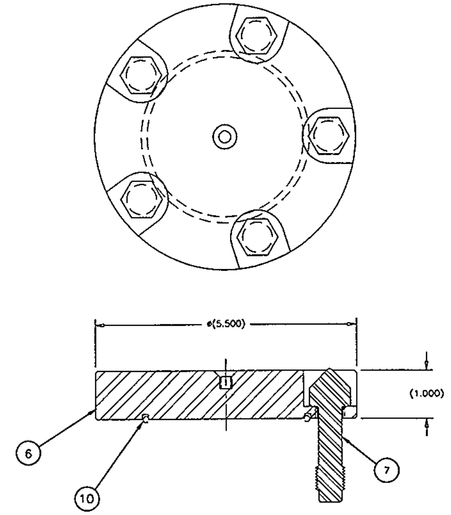

1 4-HOLE COVER PLATE ASSEMBLY SIMILAR
SCALE: 1/1

2 5-HOLE COVER PLATE ASSEMBLY SHOWN
SCALE: 1/1

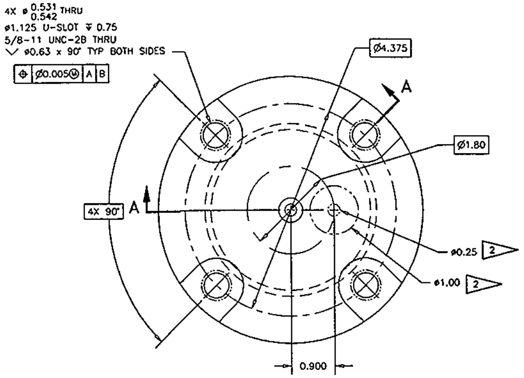

5 4 HOLE COVER PLATE
SCALE: 1/1

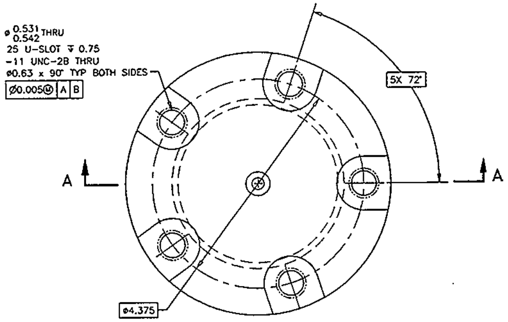

6 5-HOLE COVER PLATE
SCALE: 1/1

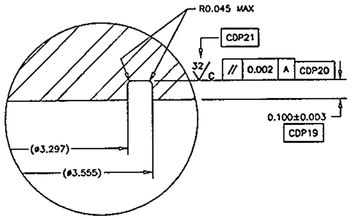

VIEW B
SCALE: 2/1

1 ASSEMBLIES -010 AND -020 ARE IDENTICAL EXCEPT FOR BOLT PATTERN.

2 THE ø.25 AND ø1.00 HOLES TO BE INCORPORATED AT THE REQUEST OF THE BUYER. ITEM 10 IS NOT NECESSARY WITH THE ø1.00 OPTION ONLY.

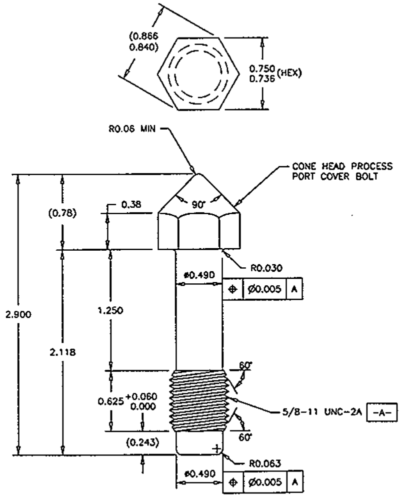

7 COVER BOLT
SCALE: 2/1

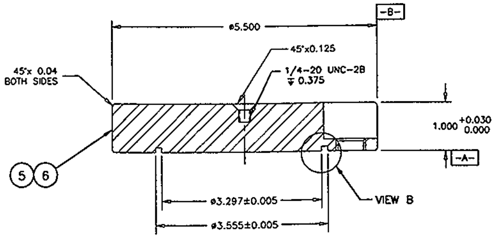

SECTION A-A
SCALE: 1/1
TYP OF 4 HOLE AND

FOR GENERAL NOTES SEE H-2-828040

HNF-SD-SNF-DR-003, Rev. 2,
Appendix 1, MCO Drawings
1-15

		H-2-828045	MCO SHIELD PLUG
		REF NUMBER	TITLE
DWG NO	TITLE	REFERENCES	
DRAWING TRACEABILITY LIST		NEXT USED ON	H-2-828041

RS

REV NO	DESCRIPTION	REV BY DATE
2	General Revision per ECN 648628	2/10/98
1	General Revision per ECN 648626	7/8/98

REVISIONS
CADFILE B828048A CADCODE WIN95:AC02:14.0:SS

DRAWN BT BECKER 5-19-97
CHECKED JD OSTERLOH 5-19-97
N/A R BASTAR 5-20-97
G PARKER (QA) 5-19-97
C TEMUS (CM) 5-19-97
R BASTAR (PM) 5-20-97
PARSONS I & T, INC.

U.S. DEPARTMENT OF ENERGY
Richland Operations Office
Duke Engineering & Services Hanford, Inc.

MCO PROCESS PORT
COVER PLATES

F 212-H 3902 H-2-828048 2
SCALE SHOWN SHEET 1 OF 1

2 PLOT SCALE: 1=1
GTITLE.DWG (10/96)

PARTS/MATERIAL LIST

QTY REQD	-010	PART/DASH NUMBER	NOMENCLATURE/DESCRIPTION	MATERIAL/REFERENCE	SHEET	ITEM NO
	☒	-010	FILTER MANIFOLD ASSEMBLY	HNF-S-0556	1	1
						2
						3
	1	-001	FILTERS	HNF-S-0556	1	4
	1	-002	ANGLE, 2x 2x 1/4x 17 LONG	SA-470 316L	1	5
	1	-003	BAR, 2x 1/4x 17 LONG	SA-240 316L	1	6

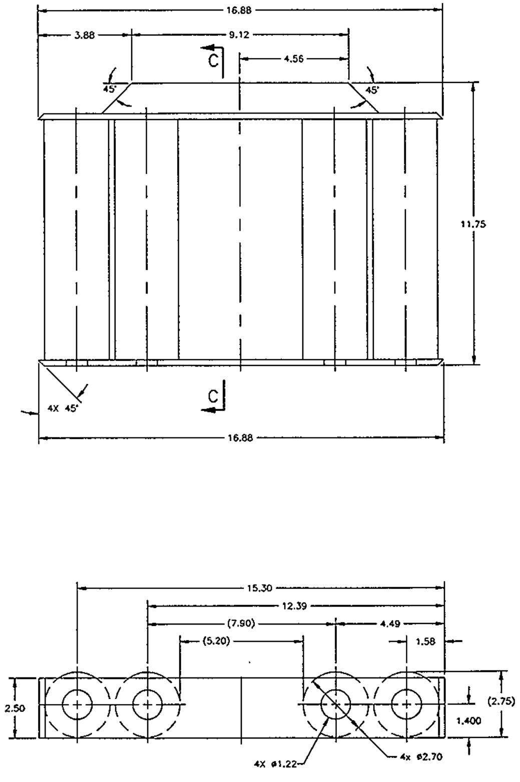

① FILTER ASSEMBLY

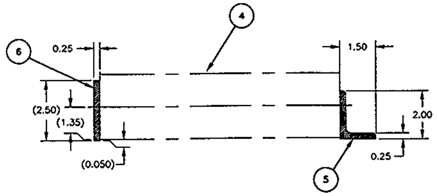

SECTION C-C

ROTATED 90° CW

FOR GENERAL NOTES SEE H-2-828040

HNF SD-SNF-DR-003, Rev. 2,
Appendix 1, MCO Drawings
1-16

		REF NUMBER	TITLE
		H-2-828045	MCO SHIELD PLUG
DWG NO	TITLE		REFERENCES
DRAWING TRACEABILITY LIST		NEXT USED ON	H-2-828041

RS

REV NO	DESCRIPTION
2	General Revision per ECN 648628
1	General Revision per ECN 648626

REVISIONS

CADFILE 8828049A CADCODE WIN95:ACD2:14.0:SS

BT BECKER 5-12-97
JD OSTERLOH 5-18-97
N/A R BASTAR 5-20-97
G PARKER (QA) 5-18-97
C TEMUS (CM) 5-19-97
R BASTAR (PM) 5-20-97
PARSONS I & T, INC.

U.S. DEPARTMENT OF ENERGY
Richland Operations Office
Duke Engineering & Services Hanford, Inc.

MCO INTERNAL
FILTER ASSEMBLY

F 212-H 3902 H-2-828049 2

SCALE 1/2 SHEET 1 OF 1

2 PLOT SCALE: 1/1

GTITLE.DWG (10/96)

PARTS/MATERIAL LIST				
PART/DASH NUMBER	NOMENCLATURE/DESCRIPTION	MATERIAL/REFERENCE	SHEET	ITEM NO
-001	BASKET STABILIZER EXTENSION	SA-479 304L	1	1

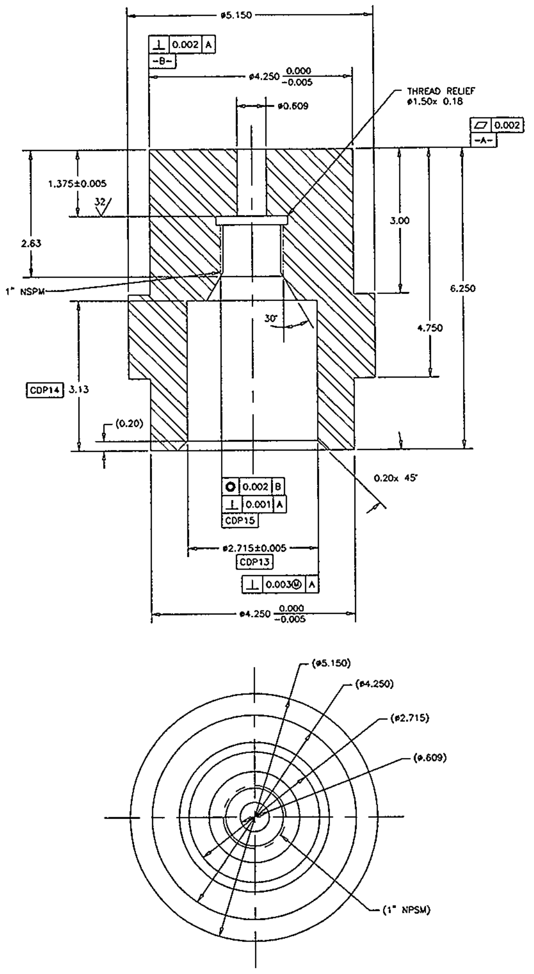

① BASKET STABILIZER EXTENSION

FOR GENERAL NOTES SEE H-2-828040

HNF-SD-SNF-DR-003, Rev. 2,
Appendix 1, MCO Drawings
1-17

DWG NO	TITLE
DRAWING TRACEABILITY LIST	

H-2-828051	MCO PROCESS TUBE
H-2-828046	INTERNAL FILTER SHIELD
H-2-828045	MCO SHIELD PLUG
REF NUMBER	TITLE
REFERENCES	
NEXT USED ON	H-2-828041

RS

REV NO	DESCRIPTION
2	General Revision per ECN 648628
1	General Revision per ECN 648626

REVISIONS

CADFILE B828050A CADCODE WIN95:ACD2:14.0:SS

BT BECKER 5-9-97
JD OSTERLOH 5-16-97
N/A R BASTAR 5-20-97
G PARKER (QA) 5-19-97
C TEMUS (CM) 5-19-97
R BASTAR (PM) 5-20-97
PARSONS I & T, INC.

U.S. DEPARTMENT OF ENERGY
Richland Operations Office
Duke Engineering & Services Hanford, Inc.

MCO BASKET STABILIZER
EXTENSION

SIZE	BLDG NO	INDEX NO	DWG NO	REV
F	212-H	3902	H-2-828050	2

SCALE 1=1 SHEET 1 OF 1

2 PLOT SCALE: 1=1

GTITLE.DWG (10/96)

PARTS/MATERIAL LIST

QTY REQD -020	QTY REQD -010	PART/DASH NUMBER	NOMENCLATURE/DESCRIPTION	MATERIAL/REFERENCE	SHEET	ITEM NO.
	1	-001	PROCESS TUBE, PIPE, 1"X 147" L SCHED XXS	SA-312 TP304L SST	1	1
						2
						3

FLAG NOTES

1 THREADS MUST BE CONCENTRIC WITHIN .002 OF DATUM "A".

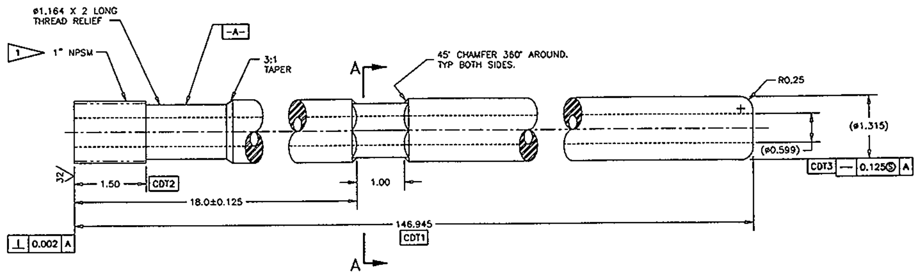

① PROCESS TUBE

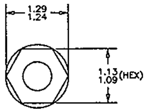

SECTION A-A
SCALE: FULL

FOR GENERAL NOTES SEE H-2-828040

HNF-SD-SNF-DR-003, Rev. 2,
Appendix 1, MCO Drawings
1-18

DWG NO	TITLE
DRAWING TRACEABILITY LIST	

REF NUMBER	TITLE
H-2-828044	MCO SHELL BOTTOM
H-2-828050	BASKET STABILIZER
REFERENCES	
NEXT USED ON H-2-828041	

REVISIONS

	REV NO	DESCRIPTION
RS	2	General Revision per ECN 648628
	1	General Revision per ECN 648626

CADFILE B828051A
CADCODE WIN95:ACD2:14.0:SS

BT BECKER
JD OSTERLOH
N/A R BASTAR
G PARKER (QA)
C TEMUS (CM)
R BASTAR (PM)
PARSONS I & T, INC.

U.S. DEPARTMENT OF ENERGY
Richland Operations Office
Duke Engineering & Services Hanford, Inc.

MCO PROCESS
TUBE

SIZE	BLDG NO	INDEX NO	DWG NO	REV
F	212-H	3902	H-2-828051	2

SCALE 1=1
SHEET 1 OF 1

PLOT SCALE: 1=1
GTITLE.DWG (10/96)

PARTS/MATERIAL LIST

QTY REQD -020	QTY REQD -010	PART/DASH NUMBER	NOMENCLATURE/DESCRIPTION	MATERIAL/REFERENCE	SHEET	ITEM NO.
		-001	PROCESS TUBE GUIDE CONE	SA-479 304L SST	1	1

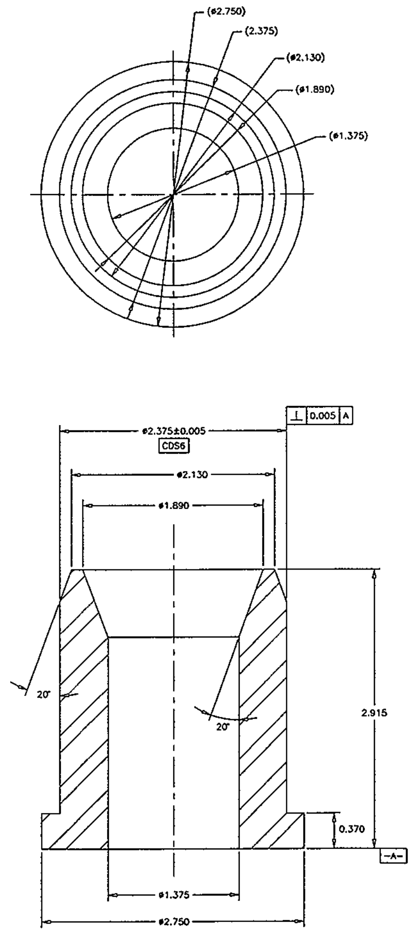

① PROCESS TUBE GUIDE CONE

FOR GENERAL NOTES SEE H-2-828040

HNF-SD-SNF-DR-003, Rev. 2,
Appendix 1, MCO Drawings
1-19 ~~1-20~~ KES

REF NUMBER	TITLE
H-2-828053	MCO BSKT SUPPORT PLATE
H-2-828051	MCO DIP TUBE
H-2-828050	SHELL BOTTOM

REFERENCES

NEXT USED ON H-2-828041

DWG NO	TITLE

DRAWING TRACEABILITY LIST

REV NO	DESCRIPTION
2	General Revision per ECN 648628
1	General Revision per ECN 648626

RS

REVISIONS

CADFILE 8828052A
CADCODE WIN95:ACD2:14.0:SS

DRAWN BT BECKER
CHECKED JD OSTERLOH
N/A R BASTAR
G PARKER (QA)
C TEMUS (CM)
R BASTAR (PM)
PARSONS I & T, INC.

U.S. DEPARTMENT OF ENERGY
Richland Operations Office
Duke Engineering & Services Hanford, Inc.

MCO PROCESS TUBE
GUIDE CONE

SIZE F | BLDG NO 212-H | INDEX NO 3902 | DWG NO H-2-828052 | REV 2

SCALE SHOWN | SHEET 1 OF 1

PLOT SCALE: 1=1

GTITLE.DWG (10/96)

DWG NO H-2-828052 | SH 1 OF 1 | REV 2

QTY REQD -020	QTY REQD -010	PART/DASH NUMBER	NOMENCLATURE/DESCRIPTION	MATERIAL/REFERENCE	SHEET	ITEM NO.
		-001	BASKET SUPPORT PLATE, FLAT BAR 1/2 THK	SA-240 304L SST	1	1

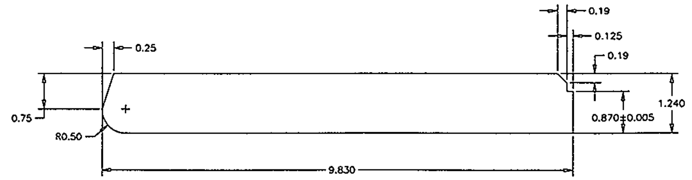

① BASKET SUPPORT PLATE

FOR GENERAL NOTES SEE H-2-828040

DWG NO	TITLE
DRAWING TRACEABILITY LIST	

REF NUMBER	TITLE
H-2-828052	PROCESS TUBE GUIDE CONE
H-2-828044	SHELL BOTTOM
REFERENCES	
NEXT USED ON	H-2-828041

RS

REV NO	DESCRIPTION
2	General Revision per ECN 648628
1	General Revision per ECN 648626

REVISIONS

CADFILE B828053A CADCODE WIN95:ACD2:14.0:SS

BT BECKER 5-8-97
JD OSTERLOH 5-18-97
N/A R BASTAR 5-20-97
G PARKER (QA) 5-18-97
C TEMUS (CM) 5-19-97
R BASTAR (PM) 5-20-97
PARSONS I & T, INC.

U.S. DEPARTMENT OF ENERGY
Richland Operations Office
Duke Engineering & Services Hanford, Inc.

MCO BASKET
SUPPORT PLATE

F 212-H 3902 H-2-828053 2

SCALE 1=1 SHEET 1 OF 1

PLOT SCALE: 1=1

GTITLE.DWG (10/96)

PART/MATERIAL LIST

QUANTITY REQUIRED -040	QUANTITY REQUIRED -030	QUANTITY REQUIRED -020	QUANTITY REQUIRED -010	PART/DASH NUMBER	NOMENCLATURE/DESCRIPTION	MATERIAL/REFERENCE	SHEET	ITEM NO.
			X	-010	ASSEMBLY		1	1
		X	1	-020	SUBASSEMBLY, CENTER POST & BASE PLATE		2	2
	X	~~1~~		~~-030~~	~~SUBASSEMBLY, CENTER POST~~		~~2~~	3
								4
								5
	~~1~~			~~-006~~	~~CENTER COUPLING, BAR ROUND, CENTERLESS GROUND TO ⌀5.0012 — 5.0010 X 4.5 L~~	~~SA-479 304L SST~~	~~3~~	6
	~~1~~			~~-007~~	~~CENTER BUSHING, BAR ROUND, CENTERLESS GROUND TO ⌀5.0012 — 5.0010 X 6 L~~	~~SA-479 304L SST~~	~~3~~	7
		1		-008	CENTER POST, ROUND BAR (⌀6.625"), AS REQ'D	SA-479 DUAL CERT 304/304L SST	3	8
		1		-009	BASE PLATE, (APPROX. ⌀24 X 1.50 THK), AS REQ'D	SA-240 DUAL CERT 304/304L SST	4	9
								10
			1	-011	SPACER, EXPANDED METAL, (RYERSON 3/4 NO. 081 HVY. OR EQUAL), (0.300 THK)	AL 5005H-34 3/4 NO. 0.081 HVY	5	11
			6	-012	OUTSIDE POST, CUSTOM TRAPEZOID BAR	SA-479 DUAL CERT 304/304L SST	5	12
			AR	-013	SHROUD, SHEET METAL 18 GA, (.048 THK) x 14.0, LENGTH AS REQ'D	SA-240 304L SST	1	13
			6	-014	5/8-11 UNRC-3A x 2.50, HEX SOCKET COUNTERSUNK FLAT HEAD CAP SCREW, PER ANSI/ASME B18.3	SA-193 B8S or B8SA	–	14
		1		-015	5/16 COILED SPRING PIN, 0.75 LONG, STD OR HEAVY DUTY	SAE J405 (30302) OR (30304) ANSI/ASME B18.8.2-94	2	15
			1	-016	FUEL RACK, WROUGHT OR CAST ALUMINUM PLATE, APPROX. ⌀24 X 2.5 THK	ALUMINUM	4	16

2

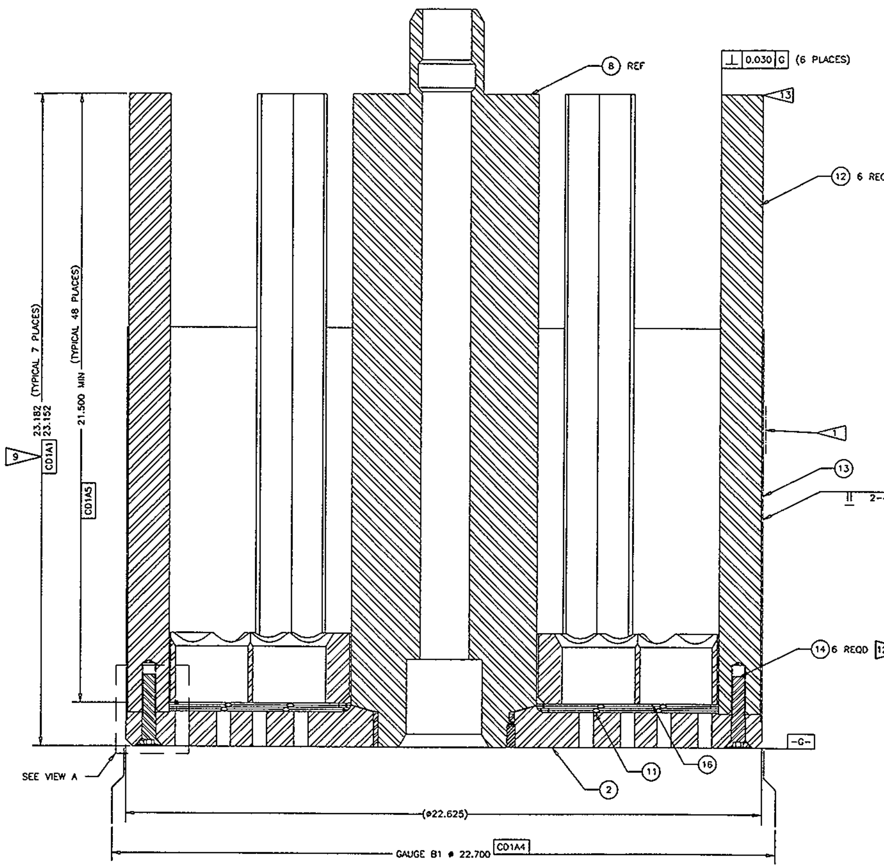

① ASSEMBLY
SCALE: 1/2

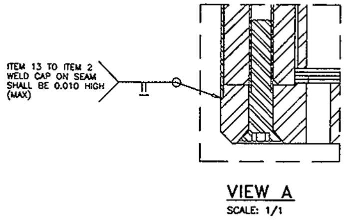

VIEW A
SCALE: 1/1

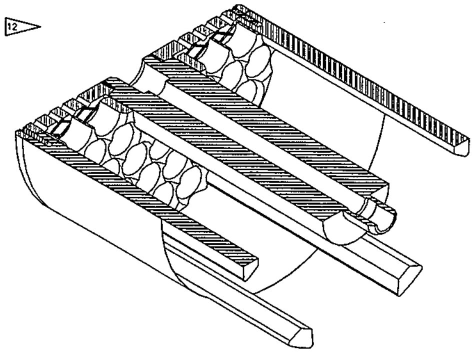

GENERAL NOTES: (UNLESS OTHERWISE SPEC.)

1. ALL PARTS AND MATERIAL AS SPECIFIED OR BUYER APPROVED EQUAL.
2. ABBREVIATIONS ARE IN ACCORDANCE WITH ANSI/ASME Y1.1-89.
3. WELDING SYMBOLS ARE IN ACCORDANCE WITH ANSI/AWS A2.4-98.
4. SURFACE TEXTURE SYMBOLS ARE IN ACCORDANCE WITH ANSI/ASME Y14.36-96. SURFACE TEXTURE VALUES ARE IN MICROINCHES AND ARE IN ACCORDANCE WITH ANSI/ASME B46.1-95.
5. ALL UNSPECIFIED MACHINED SURFACES SHALL BE $\overset{125}{\checkmark}$ OR BETTER.
6. REMOVE ALL BURRS AND BREAK ALL SHARP EDGES.
7. ALL UNSPECIFIED MACHINE TOOL RADII SHALL BE 0.03 MAXIMUM.
8. WELDED SURFACES SHALL BE SMOOTH AND UNIFORM IN APPEARANCE WITHOUT ABRUPT CHANGES IN CONTOUR.
9. DIMENSIONING AND TOLERANCING SHALL BE PER ANSI/ASME Y14.5M-94. DIMENSIONS ARE IN INCHES AND APPLY AT 72°F UNLESS OTHERWISE SPECIFIED. UNSPECIFIED TOLERANCES SHALL BE:
   - -DECIMAL: .X ± 0.1, .XX ± 0.03, .XXX ± 0.010
   - -ANGULAR: ± 1°
   - ~~-ALL IMPLIED 90° ANGLES SHALL BE PERPENDICULAR WITHIN THE GREATEST TOLERANCE OF THE LINEAR DIMENSION.~~
   - ~~-ALL COAXIAL FEATURES SHALL BE CONCENTRIC WITHIN ⌀.003 UNLESS OTHERWISE SPECIFIED.~~
10. APPROXIMATE WEIGHT = 472 LB.
11. FABRICATION, WELDING AND INSPECTION SHALL BE IN ACCORDANCE WITH ASME SECTION III DIVISION 1, SUBSECTION NG AND SECTION IX, 1998
12. ~~MATE PARTS IN ACCORDANCE WITH, INTERFERENCE-LOCATIONAL FITS PER ANSI/ASME B4.1 1967, R1994.~~
13. ADDITIONAL FABRICATION REQUIREMENTS ARE IN HNF-S-3868, MCO BASKET FABRICATION SPECIFICATION.
14. PIECE / PART TOLERANCES ON THESE DRAWINGS SHOULD LEND TO ACCEPTABLE ASSEMBLY GEOMETRIES. ALTERNATE PIECE / PART TOLERANCES MAY BE UTILIZED WITH THE BUYER'S APPROVAL. ACCEPTABLE FINAL ASSEMBLY GEOMETRIES ARE SHOWN IN THE FABRICATION SPECIFICATION'S CRITICAL DIMENSION TABLES / SKETCHES. IN THE EVENT THAT THERE IS A CONFLICT BETWEEN THE CRITICAL DIMENSION TABLES / SKETCHES AND THE DESIGN DRAWINGS, THE BUYER SHALL BE NOTIFIED FOR RESOLUTION.
15. PARTS WITH DUAL MATERIAL DESIGNATION OF 304/304L SHALL MEET THE REQUIREMENTS OF 304L OR F304L AND HAVE THE FOLLOWING PROPERTIES:
    MINIMUM YIELD STRENGTH = 30 KSI @ 70 °F
    MINIMUM TENSILE STRENGTH = 75 KSI @ 70 °F
16. PRIOR TO ASSEMBLY ALL THREAD AND CONTACT SURFACES OF ALL THREADED PARTS SHALL BE BRUSHED WITH NEOLUBE (GRAPHITE/ALCOHOL) TO PROVIDE A COMPLETE SURFACE COATING.
17. CRITICAL DIMENSIONS ARE IDENTIFIED BY THE SYMBOL $\boxed{CD\_\_\_}$ AND ARE LISTED AND DEFINED IN THE FABRICATION SPECIFICATION. METHODS OF MEASUREMENT AND GAUGING ARE ALSO DEFINED IN THE SPECIFICATION.

SEE SHEET 2 FOR FLAG NOTES

HNF-SD-SNF-DR-003, Rev. 2,
Appendix 1, MCO Drawings
(-2)

DWG NO	TITLE	REF NUMBER	TITLE
DRAWING TRACEABILITY LIST		NEXT USED ON	REFERENCES

	REV NO	DESCRIPTION	REV BY DATE	DSN BY	SM/ BY	ENGR COMPANY
RS	2	General Revision per ECN 648629				
	1	General Revision per ECN 648626	7/8/98	7/16/98	7/16/98	7/16/98

REVISIONS

CADFILE B828060A CADCODE WIN95:ACD3:14.0:SS

DRAWN J D OSTERLOH
CHECKED Z SARGENT
APPD R BASTAR (PM)
C TEMUS
R BASTAR
DESIGN AGENT PARSONS I & T, INC.

U.S. DEPARTMENT OF ENERGY
Richland Operations Office
Duke Engineering & Services Hanford, Inc.

K-BASIN SNF
STORAGE BASKET
MARK 1A

SIZE F BLDG NO 212-H INDEX NO 3902 DWG NO H-2-828060 REV 2
SCALE SHOWN SHEET 1 of 5

2 PLOT SCALE: 1=1
1 CTITLE.DWG (10/96)

NOTES:

1. IDENTIFY PER SECTION 6.4.3 OF HNF-S-0453, FABRICATION SPECIFICATION FOR MULTI-CANISTER OVERPACK, WITH SERIAL NUMBER IN APPROX. LOCATION SHOWN.
2. ALTERNATE MATERIAL, SA-312 DUAL CERT. TP 304/304L.
3. ~~⌀.510 ↧ 0.70 INTO ⑥ AND ⑦ RESPECTIVELY. HOLES TO BE INDEXED FROM ⑥ AT ASSEMBLY.~~ .493
4. ~~THOROUGHLY BRUSH THREAD AND CONTACT SURFACES OF THREADED PARTS WITH NEOLUBE (GRAPHITE/ALCOHOL) BEFORE ASSEMBLY.~~
5. ~~SUGGESTED PIECE TOLERANCE MAY BE ADJUSTED BY NO MORE THAN ±0.005 AS LONG AS AN ANSI/ASME B4.1 1967, R1994 INTERFERENCE LOCATIONAL FIT CLASS LN 2 IS OBTAINED.~~
6. ~~WELDING AND NDE SHALL BE IN ACCORDANCE WITH ASME B&PV CODE, 1998 EDITION, SECTION III, DIVISION 1, SUBSECTION NG.~~
7. BASE PLATE HOLES FOR THE ATTACHMENT OF THE SIDEPOSTS MAY BE DRILLED BEFORE OR AFTER ASSEMBLY OF THE BASE PLATE AND THE CENTER POST, PROVIDED THE SPECIFIED LOCATIONAL TOLERANCE OF THESE HOLES IS MET ON THE SUBASSEMBLY.
8. A HELICAL CONTOUR, NOT TO EXCEED 0.005 IN DEPTH, IS ACCEPTABLE IN THE ⌀2.580 FUEL RACK (PN 16) HOLES.
9. THE ASSEMBLED HEIGHT OF THE OUTSIDE AND CENTER SUPPORT POSTS, AS MEASURED FROM THE BASE PLATE SURFACE, SHALL NOT DEVIATE FROM ONE ANOTHER BY MORE THAN 0.030 INCHES.
10. FINAL MACHINING OF THE CENTER POST AND BASE PLATE MAY BE DONE EITHER BEFORE OR AFTER ASSEMBLY AS LONG AS FINISHED DIMENSIONS AND TOLERANCES ARE MET.
11. THE CENTER POST WILL BE SCREWED INTO THE BASEPLATE AND TIGHTENED USING 370 ± 30 FT-LB TORQUE.
12. THE SCREWS USED TO ATTACH THE OUTSIDE POSTS TO THE BASEPLATE WILL BE TIGHTENED USING 60 ± 8 FT-LB TORQUE.
13. THE TOP SURFACE OF THE OUTSIDE POST NEAREST THE BASKET SERIAL NUMBER SHALL BE COLOR MARKED TO FACILITATE BASKET LOADING. DETAILS REGARDING THIS MARKING SHALL BE PROVIDED BY THE FABRICATOR ON HIS SHOP DRAWINGS.

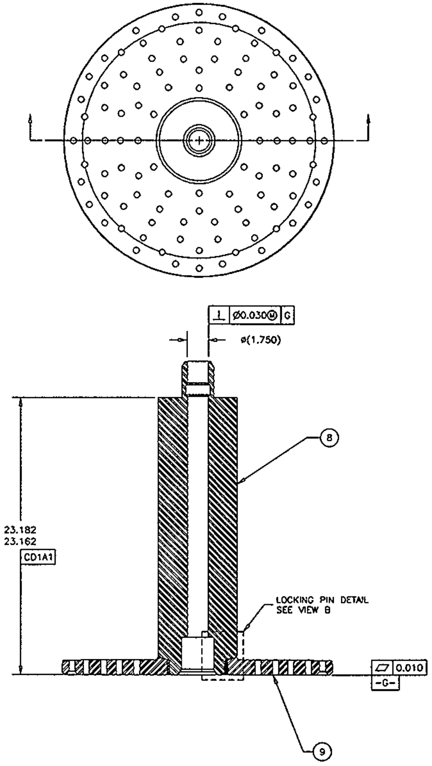

② SUBASSEMBLY, CENTER POST & BASE PLATE 10 11
SCALE: 1/4

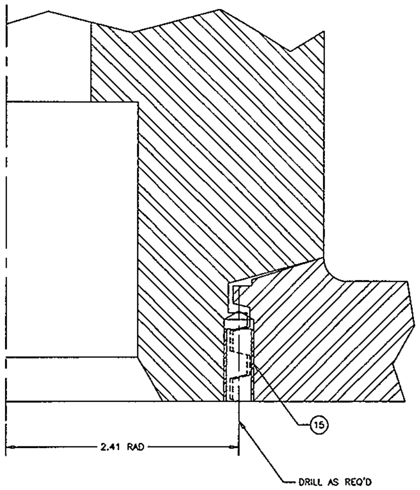

VIEW B
SCALE: 2/1

SEE SHEET 1 FOR GENERAL NOTES

HNF-SD-SNF-DR-003, Rev. 2,
Appendix 1, MCO Drawings
1-22

REV	DESCRIPTION
2	General Revision per ECN 648629
1	General Revision per ECN 648626

REVISIONS

CADFILE B828060B CADCODE WIN95:AC03:14.0:SS

DRAWN	J D OSTERLOH
CHECKED	Z SARGENT
R BASTAR	
	C TEMUS
	R BASTAR
	PARSONS I & T, INC.

U.S. DEPARTMENT OF ENERGY
Richland Operations Office
Duke Engineering & Services Hanford, Inc.

K-BASIN SNF
STORAGE BASKET
MARK 1A

F 212-H 3902 H-2-828060 2
SCALE SHOWN SHEET 2

DWG NO | TITLE | REF NUMBER | TITLE
DRAWING TRACEABILITY LIST | NEXT USED ON SHEET 1 | REFERENCES

2 PLOT SCALE: 1=1
GTITLE.DWG (10/96)

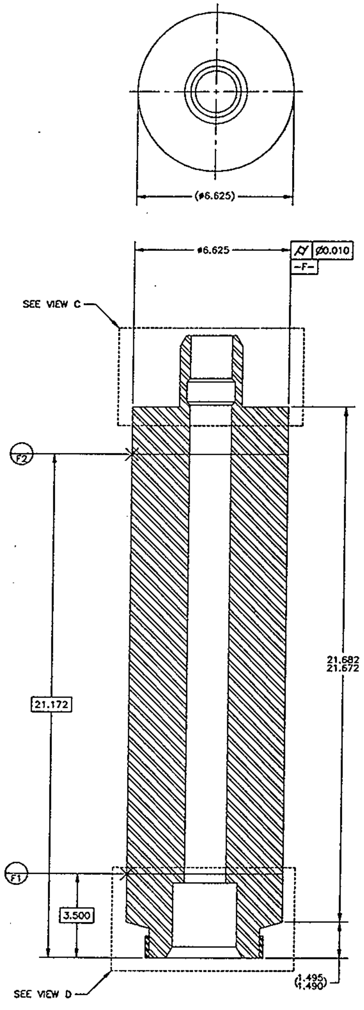

CENTER POST
SCALE: 1/2

⑧

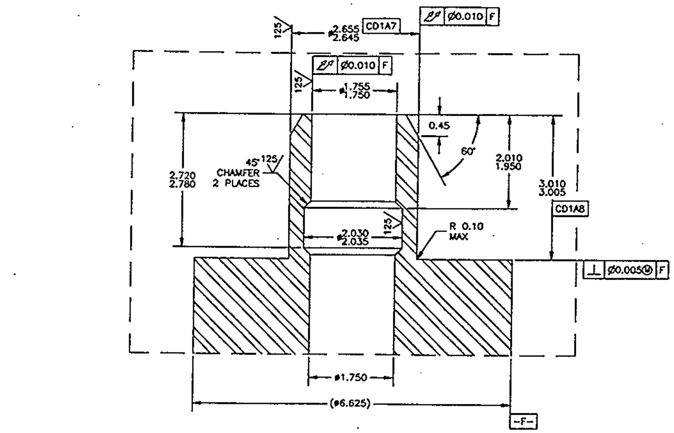

COUPLING NIPPLE DETAIL

VIEW C
SCALE: 1/1

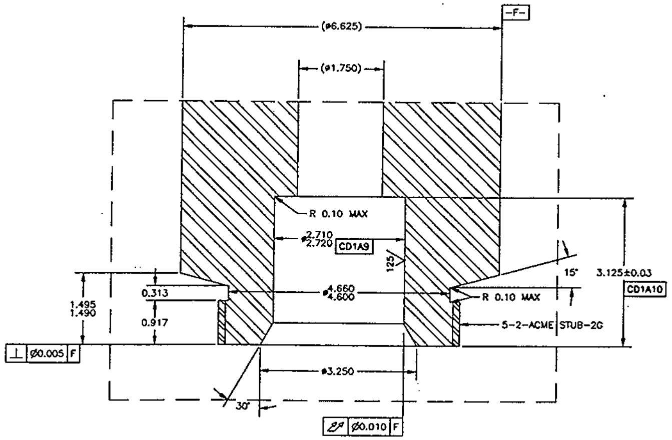

COUPLING PORT DETAIL

VIEW D
SCALE: 1/1

SEE SHEET 1 FOR GENERAL NOTES
SEE SHEET 2 FOR FLAG NOTES

HNF-SD-SNF-DR-003, Rev. 2,
Appendix 1, MCO Drawings
1-23

Manual changes have been updated
on the CAD datafile.

RS	2	General Revision per ECN 648629, 645049, 645078			
	1	General Revision per ECNs 648626, ~~345049, and 645078~~			
	REV NO	DESCRIPTION	REV BY DATE		
		REVISIONS			

CADFILE B828060C
CADCODE WIN95:AC03:14.0:SS

DWG NO	TITLE	REF NUMBER	TITLE
	DRAWING TRACEABILITY LIST	NEXT USED ON SHEET 2	REFERENCES

J D OSTERLOH
Z SARGENT
R BASTAR
C TEMUS
R BASTAR
PARSONS I & T, INC.

U.S. DEPARTMENT OF ENERGY
Richland Operations Office
Duke Engineering & Services Hanford, Inc.

K-BASIN SNF
STORAGE BASKET
MARK 1A

F 212-H 3902 H-2-828060 2
SCALE SHOWN
SHEET 3

PLOT SCALE: 1=1
GTITLE.DWG (10/96)

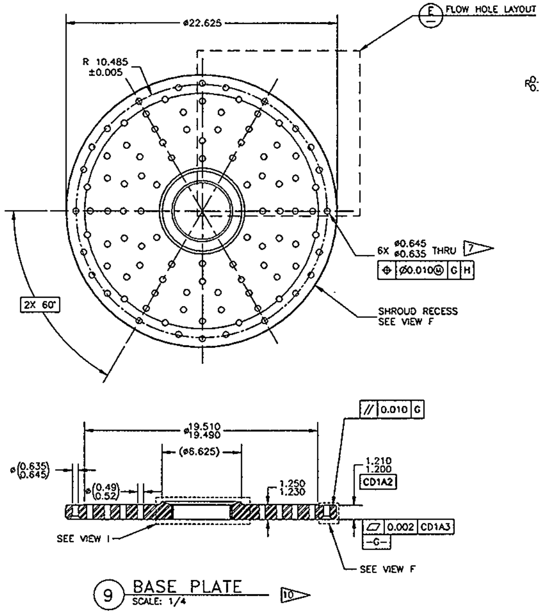

⑨ BASE PLATE
SCALE: 1/4
10

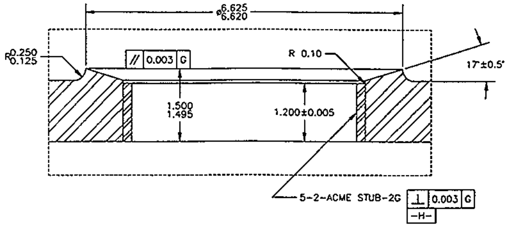

VIEW I
SCALE: 1/1

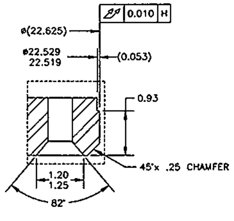

VIEW F
SCALE: 1/1
TYPICAL 6 PLACES

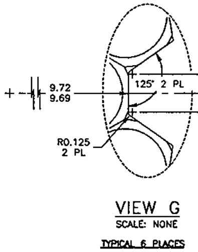

VIEW G
SCALE: NONE
TYPICAL 6 PLACES

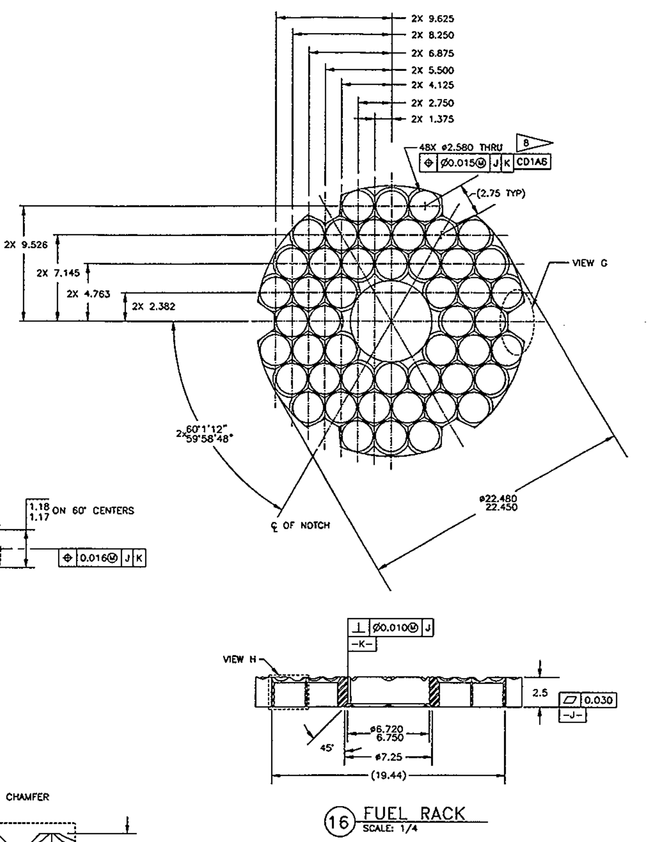

⑯ FUEL RACK
SCALE: 1/4

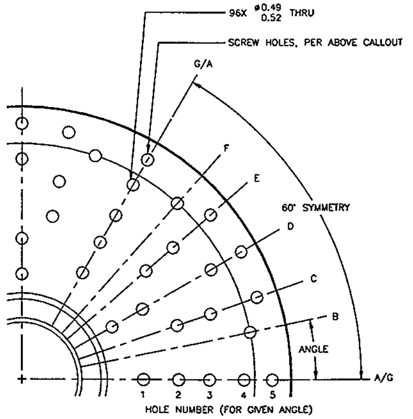

E FLOW HOLE LAYOUT
SCALE: NONE

HOLE FLOW LAYOUT

HOLE NUMBER	HOLE RADIAL DISTANCE FROM CENTER PER ANGLE						
	A/G	B	C	D	E	F	G/A
∦	0.00°	11.65°	19.11°	30.00°	40.89°	48.35°	60.00°
5	X						X
4	9.29"			10.57"			9.29"
3	7.83"		10.40"	9.10"	10.40"		7.83"
2	6.54"		8.32"	5.81"	8.32"		6.54"
1	5.08"	9.74"	6.85"	4.34"	6.85"	9.74"	5.08"

1- "X" DENOTES SCREW HOLES, LOCATION AND SIZE SPECIFIED ON BASE PLATE PLAN
2- HOLES ARE NUMBERED FROM THE CENTER OUT.

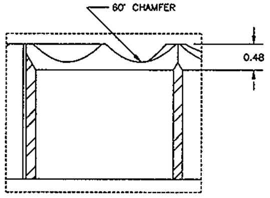

VIEW H
SCALE: NONE
TYPICAL 48 PLACES

SEE SHEET 1 FOR GENERAL NOTES
SEE SHEET 2 FOR FLAG NOTES

HNF-SD-SNF-DR-003, Rev. 2,
Appendix 1, MCO Drawings
1-24

DWG NO	TITLE	REF NUMBER	TITLE
DRAWING TRACEABILITY LIST		NEXT USED ON	SHEET 2
			REFERENCES

RS

REV	DESCRIPTION
2	General Revision per ECN 648629
1	General Revision per ECN 648628

REVISIONS
CADFILE B828060D
CADCODE WIN95:ACD3:14.0:SS

DRAWN J D OSTERLOH
CHECKED Z SARGENT
R BASTAR
C TEMUS
R BASTAR
PARSONS I & T, INC.

U.S. DEPARTMENT OF ENERGY
Richland Operations Office
Duke Engineering & Services Hanford, Inc.

K-BASIN SNF
STORAGE BASKET
MARK 1A

F 212-H 3902 H-2-828060 2
SCALE SHOWN SHEET 4
2 PLOT SCALE: 1=1
GTITLE.DWG (10/96)

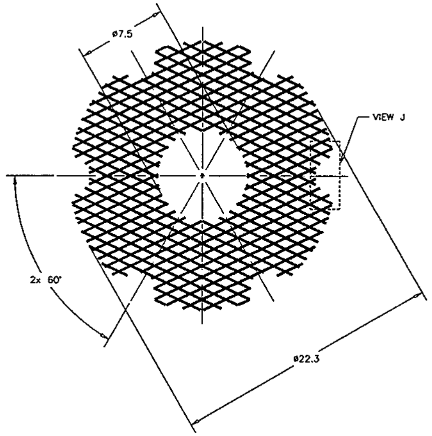

⑪ SPACER
SCALE: 1/4

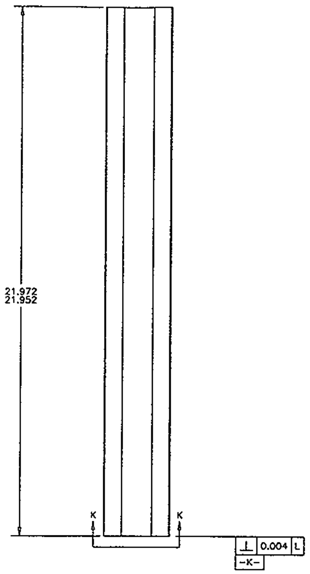

⑫ OUTSIDE POST
SCALE: 1/2

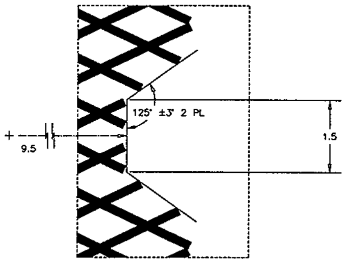

VIEW J
SCALE: 1/1
TYPICAL 6 PLACES

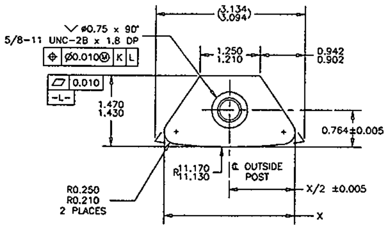

VIEW K--K
SCALE: 1/1

SEE SHEET 1 FOR GENERAL NOTES
SEE SHEET 2 FOR FLAG NOTES

HNF-SD-SNF-DR-003, Rev. 2,
Appendix 1, MCO Drawings
1-25

RS

REV NO	DESCRIPTION	REV BY DATE	CHK BY	CHK/ QA	CHDR
2	General Revision per ECN 648629	2/10/99			
1	General Revision per ECN 648626	7/16/98	7/16/98	7/16/98	7/16/98

REVISIONS

DRAWN	J D OSTERLOH
CHECKED	Z SARGENT
	R BASTAR
	C TEMUS
	R BASTAR
DESIGN AGENT	PARSONS I & T, INC.

U.S. DEPARTMENT OF ENERGY
Richland Operations Office
Duke Engineering & Services Hanford, Inc.

K-BASIN SNF
STORAGE BASKET
MARK 1A

SIZE	BLDG NO	INDEX NO	DWG NO	REV
F	212-H	3902	H-2-828060	2

SCALE SHOWN
SHEET 5 OF

CADFILE B828060E
CADCODE WIN95:ACD3:14.0:SS
PLOT SCALE: 1=1
GTITLE.DWG (10/96)

DWG NO	TITLE	REF NUMBER	TITLE
DRAWING TRACEABILITY LIST		NEXT USED ON	REFERENCES SHEET 1

PART/MATERIAL LIST

QUANTITY REQUIRED -040	-030	-020	-010	PART/DASH NUMBER	NOMENCLATURE/DESCRIPTION	MATERIAL/REFERENCE	SHEET	ITEM NO.
			☒	-010	ASSEMBLY		1	1
		☒	1	-020	SUBASSEMBLY, CENTER POST & BASE PLATE		2	2
	☒	~~1~~		~~-030~~	~~SUBASSEMBLY, CENTER POST~~		~~2~~	3
	☒		1	-040	SUBASSEMBLY, SHROUD		4	4
								5
	~~1~~			~~-006~~	~~CENTER COUPLING, BAR ROUND, CENTERLESS GROUND TO ⌀5.0012 5.0019 X 4.5 L~~	~~SA-479 304L SST~~	~~3~~	6
	~~1~~			~~-007~~	~~CENTER BUSHING, BAR ROUND, CENTERLESS GROUND TO ⌀5.0012 5.0019 X 6 L~~	~~SA-479 304L SST~~	~~3~~	7
		1		-008	CENTER POST, (⌀6.625") ROUND BAR, AS REQD	SA-479 DUAL CERT 304/304L SST	3	8
		1		-009	BASE PLATE, APPROX. (⌀24 x 1.50 THK), AS REQD	SA-240 DUAL CERT 304/304L SST	4	9
		1		-011	5/16" COILED SPRING PIN, 0.75 LG, STD OR HEAVY DUTY	SAE J405 (30302) OR (30304)	2	10
	6			-012	SHROUD, 60° SEGMENT, 0.125 THK	ASTM B152 UNS C12200-060	5	11
			6	-013	OUTSIDE POST, CUSTOM TRAPEZOID BAR	SA-479 DUAL CERT 304/304L SST	5	12
	6			-014	SHROUD CHANNEL, 0.125 THK	ASTM B152 UNS C12200-060	5	13
			6	-015	5/8-11 UNRC 3A x 2.50 LG-HEX SOCKET FLAT COUNTERSUNK HEAD CAP SCREW, PER ANSI/ASME B18.3	SA-193 B8S OR B8SA	-	14
			60	-016	12-14 x 1/2-TYPE F SQUARE DRIVE FLAT HEAD SELF TAPPING SCREW	18-8 STAINLESS STEEL	-	15
								16
	13			-017	COUNTERSUNK HEAD BLIND RIVET, SERIES NO. 4, STYLE 3 OR 4, RIVET NO. 43	GRADE 51, IFI-114 STAINLESS STEEL	4	17
	1			-018	FLOW RESTRICTER, 6 x (71) x 0.013 THK	ASTM B-103, UNS C51000-H08	5	18
			1	-019	BOTTOM SCREEN	SEE FLAG NOTE 8	2	19
								20

2

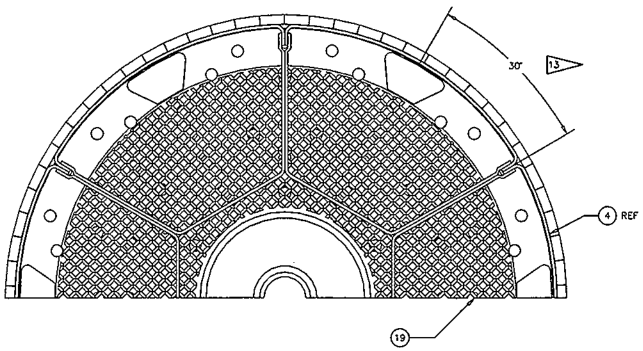

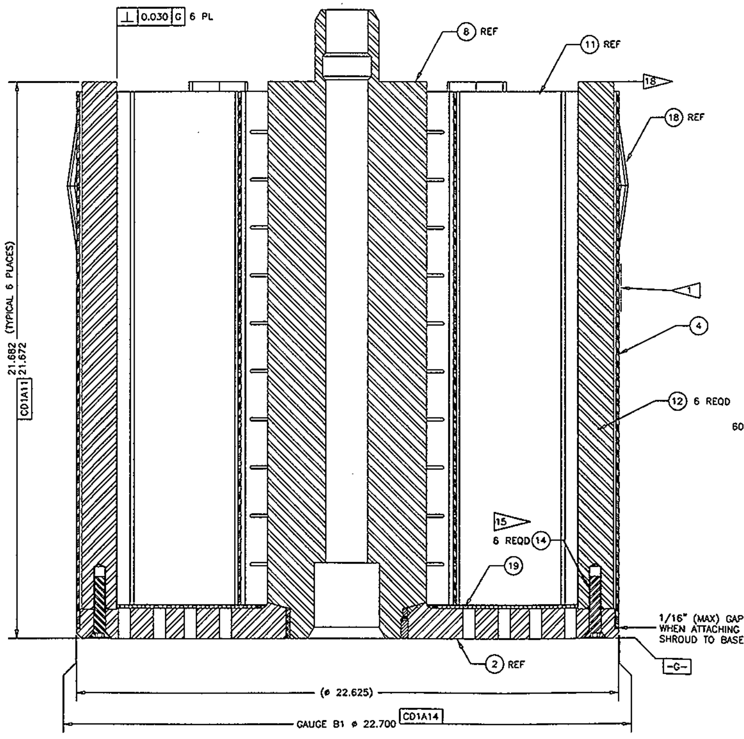

① ASSEMBLY
SCALE: 1/2

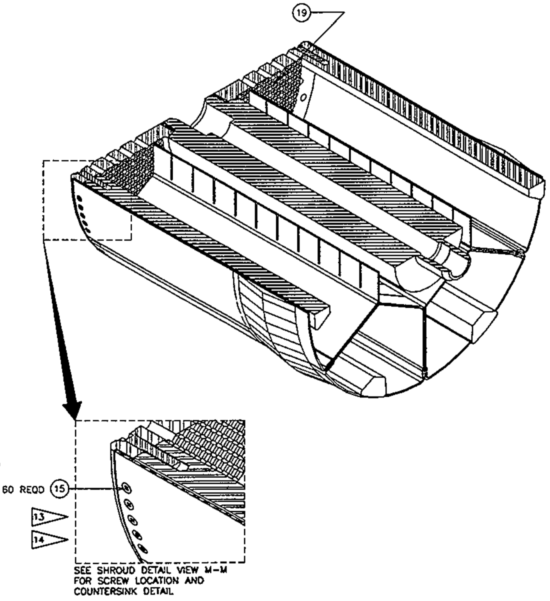

SEE SHROUD DETAIL VIEW M-M FOR SCREW LOCATION AND COUNTERSINK DETAIL

GENERAL NOTES:

1. ALL PARTS AND MATERIAL AS SPECIFIED OR BUYER APPROVED EQUAL.
2. ABBREVIATIONS ARE IN ACCORDANCE WITH ANSI/ASME Y1.1-89.
3. WELDING SYMBOLS ARE IN ACCORDANCE WITH ANSI/AWS A2.4-93.
4. SURFACE TEXTURE SYMBOLS ARE IN ACCORDANCE WITH ANSI/ASME Y14.36-96. SURFACE TEXTURE VALUES ARE IN MICROINCHES AND ARE IN ACCORDANCE WITH ANSI/ASME B46.1-95.
5. ALL UNSPECIFIED MACHINED SURFACES SHALL BE $\overset{125}{\surd}$ OR BETTER.
6. REMOVE ALL BURRS AND BREAK ALL SHARP EDGES.
7. ALL UNSPECIFIED MACHINE TOOL RADII SHALL BE 0.03 MAXIMUM.
8. WELDED SURFACES SHALL BE SMOOTH AND UNIFORM IN APPEARANCE WITHOUT ABRUPT CHANGES IN CONTOUR.
9. DIMENSIONING AND TOLERANCING SHALL BE PER ANSI/ASME Y14.5M-82. DIMENSIONS ARE IN INCHES AND APPLY AT 72°F UNLESS OTHERWISE SPECIFIED. UNSPECIFIED TOLERANCES SHALL BE:
   - -DECIMAL: .X ± 0.1, .XX ± 0.03, .XXX ± 0.010
   - -ANGULAR: ± 1°
   - ~~-ALL IMPLIED 90° ANGLES SHALL BE PERPENDICULAR WITHIN THE GREATEST TOLERANCE OF THE LINEAR DIMENSION.~~
   - ~~-ALL COAXIAL FEATURES SHALL BE CONCENTRIC WITHIN ⌀.003 UNLESS OTHERWISE SPECIFIED.~~
10. APPROXIMATE WEIGHT = 625 LB.
11. FABRICATION, WELDING AND INSPECTION SHALL BE IN ACCORDANCE WITH ASME SECTION III DIVISION 1, SUBSECTION NG AND SECTION IX, 1998. THE COPPER SHROUD SUBASSEMBLY IS A NON-CODE ITEM AND IS EXEMPT FROM CODE REQUIREMENTS.
12. ~~MATE PARTS IN ACCORDANCE WITH INTERFERENCE LOCATIONAL FITS PER ANSI/ASME B4.1-1967, R1998~~
13. ADDITIONAL FABRICATION REQUIREMENTS ARE IN HNF-S-3868, MCO BASKET FABRICATION SPECIFICATION.
14. PIECE / PART TOLERANCES ON THESE DRAWINGS SHOULD LEND TO ACCEPTABLE ASSEMBLY GEOMETRIES. ALTERNATE PIECE / PART TOLERANCES MAY BE UTILIZED WITH THE BUYER'S APPROVAL. ACCEPTABLE FINAL ASSEMBLY GEOMETRIES ARE SHOWN IN THE FABRICATION SPECIFICATION'S CRITICAL DIMENSION TABLES / SKETCHES. IN THE EVENT THAT THERE IS A CONFLICT BETWEEN THE CRITICAL DIMENSION TABLES / SKETCHES AND THE DESIGN DRAWINGS, THE BUYER SHALL BE NOTIFIED FOR RESOLUTION.
15. ~~DIVIDER ASSEMBLY IS TO BE SILVER BRAZED TOGETHER PRIOR TO INSTALLATION INTO THE STRUCTURE.~~
16. PARTS WITH DUAL MATERIAL DESIGNATION OF 304/304L SHALL MEET THE REQUIREMENTS OF 304L OR F304L AND HAVE THE FOLLOWING PROPERTIES:
    MINIMUM YIELD STRENGTH = 30 KSI @ 70 °F
    MINIMUM TENSILE STRENGTH = 75 KSI @ 70 °F
17. PRIOR TO ASSEMBLY ALL THREAD AND CONTACT SURFACES OF ALL THREADED PARTS (EXCEPT SELF-TAPPING SCREWS, PART NO 15) SHALL BE BRUSHED WITH NEOLUBE (GRAPHITE/ALCOHOL) TO PROVIDE A COMPLETE SURFACE COATING.
18. CRITICAL DIMENSIONS ARE IDENTIFIED BY THE SYMBOL $\boxed{CD\_\_}$ AND ARE LISTED AND DEFINED IN THE FABRICATION SPECIFICATION. METHODS OF MEASUREMENT AND GAUGING ARE ALSO DEFINED IN THE SPECIFICATION.

SEE SHEET 2 FOR FLAG NOTES

HNF-SD-SNF-DR-003, Rev. 2,
Appendix 1, MCO Drawings
1-26

	REV NO	DESCRIPTION
RS	3	General Revision per ECN 648629
	2	General Revision per ECN 648626
	1A	

REVISIONS

DRAWN J D OSTERLOH
CHECKED Z SARGEANT
R BASTAR (PM)
C TEMUS (CE)
R BASTAR (PM)
DESIGN AGENT PARSONS I & T, INC.

U.S. DEPARTMENT OF ENERGY
Richland Operations Office
Duke Engineering & Services Hanford, Inc.

K-BASIN SNF
SCRAP BASKET
MARK 1A

F 212-H 3902 H-2-828065 3
SCALE SHOWN SHEET 1 OF 5

CADFILE B828065A CADCODE WIN95:ACD3:14.0:SS
PLOT SCALE: 1=1
GTITLE.DWG (10/96)

DWG NO	TITLE	REF NUMBER	TITLE
DRAWING TRACEABILITY LIST		NEXT USED ON	H-2-828041

DWG NO H-2-828065 SH 1 OF 5 REV 3

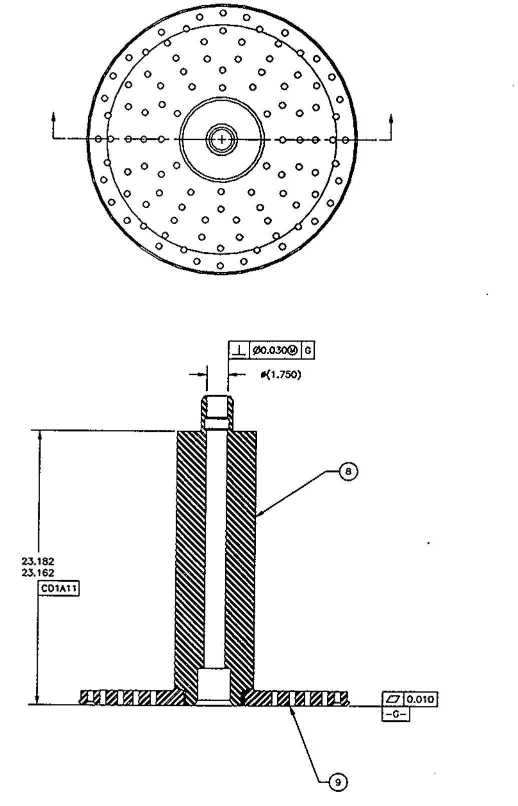

2 SUBASSEMBLY, CENTER POST & BASE PLATE 16 17
SCALE: 1/4

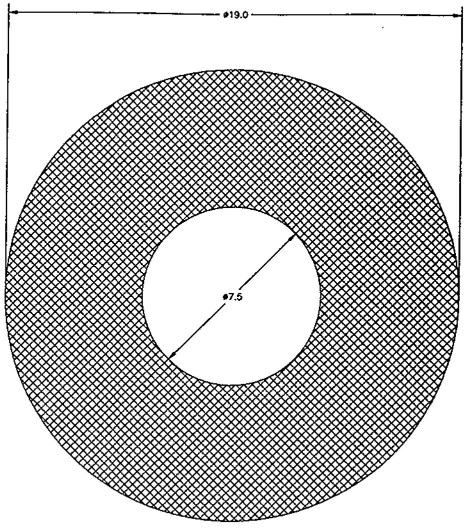

19 BOTTOM SCREEN
SCALE: 1/2

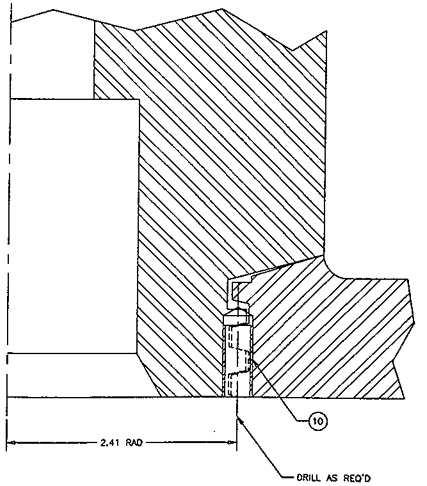

VIEW B
SCALE: 2/1

FLAG NOTES:

1. IDENTIFY PER SECTION 6.4.3 OF HNF-S-0453, FABRICATION SPECIFICATION FOR MULTI-CANISTER OVERPACK, WITH SERIAL NUMBER IN APPROX. LOCATION SHOWN.
2. ALTERNATE MATERIAL, SA-312 DUAL CERTIFIED TP 304/304L.
3. ~~ø $\frac{.493}{.510}$ 0.70 INTO ⑥ AND ⑦ RESPECTIVELY. HOLES TO BE INDEXED FROM ⑧ AT ASSEMBLY.~~
4. ~~THOROUGHLY BRUSH THREAD AND CONTACT SURFACES OF THREADED PARTS WITH NEOLUBE #2 (NEOLUBE "D" — GRAPHITE/ALCOHOL) PRIOR TO ASSEMBLY.~~
5. ~~SUGGESTED PIECE TOLERANCE MAY BE ADJUSTED BY NO MORE THAN ±.005 AS LONG AS AN ANSI/ASME B4.1-1967, R1994 INTERFERENCE LOCATIONAL FIT CLASS LN-2 IS OBTAINED. SHRINK AND PRESS FIT OPERATIONS ARE ACCEPTABLE DURING ASSEMBLY.~~
6. ~~WELDING AND NDE SHALL BE IN ACCORDANCE WITH ASME B&PV CODE, 1998 EDITION, SECTION III, DIVISION 1, SUBSECTION NG.~~
7. BASE PLATE HOLES FOR THE ATTACHMENT OF THE SIDEPOSTS MAY BE DRILLED BEFORE OR AFTER ASSEMBLY OF THE BASE PLATE AND THE CENTER POST, AS LONG AS THE SPECIFIED LOCATIONAL TOLERANCE OF THESE HOLES IS MET ON THE SUBASSEMBLY.
8. WIRE MESH SCREEN, 304 SS, 1/8" X 1/8", WIRE DIAMETER 0.047", % OF OPEN AREA 52.8% OR APPROVED EQUIVALENT.
9. ~~IN THE AREA OF THE ATTACHMENT WELDS, OVERLAY SINGLE PASS SST WELDS USING AN ASME QUALIFIED PROCESS ON THE BASE PLATE. THE ATTACHMENT WELDS OF COPPER TO THE BASE PLATE SHALL BE MADE TO THE OVERLAY ONLY AND NOT TO THE BASE METAL OF THE BASE PLATE.~~
10. ALTERNATE JOINT CONSTRUCTION DETAILS (LAP, FLANGED, OR OTHER) SHALL BE SUBMITTED TO THE BUYER FOR APPROVAL.
11. PREPARE HOLES FOR A BLIND FLUSH HEAD RIVET, AS NEEDED, TO ALLOW FOR A FLUSH OR RECESSED INSTALLATION.
12. THE ASSEMBLED HEIGHT OF THE OUTSIDE AND CENTER SUPPORT POSTS, AS MEASURED FROM THE BASE PLATE SURFACE, SHALL NOT DEVIATE FROM ONE ANOTHER BY MORE THAN 0.030 INCHES.
13. ALLIGN THE CENTER OF THE SHROUD SEGMENT WITH THE CENTER OF THE OUTSIDE POST. THIS WILL ALLOW THE SHROUD ASSEMBLY TO BE ATTACHED TO THE BASE PLATE WITHOUT INTERFERRING WITH THE OUTSIDE POST ATTACHMENT SCREWS.
14. DRILL THE BORE AND COUNTERSINK HOLES FOR THE SHROUD ATTACHMENT SCREWS DURING FINAL ASSEMBLY WHEN THE SHROUD SUBASSEMBLY IS MATED TO THE BASE PLATE. BORE SIZE AND DEPTH WILL HAVE TO BE DETERMINED THROUGH TRIAL AND ERROR PRIOR TO PRODUCTION.
15. THE SCREWS USED TO ATTACH THE OUTSIDE POSTS TO THE BASE PLATE WILL BE TIGHTENED USING 60 ± 8 FT-LB TORQUE.
16. THE CENTER POST WILL BE SCREWED INTO THE BASE PLATE AND TIGHTENED USING 370 ±30 FT-LB TORQUE.
17. FINAL MACHINING OF THE CENTER POST AND BASE PLATE MAY BE DONE EITHER BEFORE OR AFTER ASSEMBLY AS LONG AS FINISHED DIMENSIONS AND TOLERANCES ARE MET.
18. THE TOP SURFACE OF THE OUTSIDE POST NEAREST THE BASKET SERIAL NUMBER SHALL BE COLOR MARKED TO FACILITATE BASKET LOADING. DETAILS REGARDING THIS MARKING SHALL BE PROVIDED BY THE FABRICATOR ON HIS SHOP DRAWINGS.

SEE SHEET 1 FOR GENERAL NOTES

HNF-SD-SNF-DR-003, Rev. 2,
Appendix 1, MCO Drawings
1-27

DWG NO	TITLE	REF NUMBER	TITLE
DRAWING TRACEABILITY LIST		NEXT USED ON SHEET 1	REFERENCES

RS

REV	DESCRIPTION	REV BY DATE	CHK by	QA/	DICP COMPANY
3	General Revision per ECN 648629				
2	General Revision per ECN 648626	7/9/98	7/10/98	7/10/98	7/10/98

REVISIONS

CADFILE B8280658 CADCODE WIN95:ACD3:14.0:SS

DRAWN J D OSTERLOH
CHECKED Z SARGENT
R BASTAR
C TEMUS
R BASTAR
PARSONS I & T, INC.

U.S. DEPARTMENT OF ENERGY
Richland Operations Office
Duke Engineering & Services Hanford, Inc.

K-BASIN SNF
SCRAP BASKET
MARK 1A

F 212-H 3902 H-2-828065 3
SCALE SHOWN SHEET 2 OF

2 PLOT SCALE: 1=1
GTITLE.DWG (10/96)

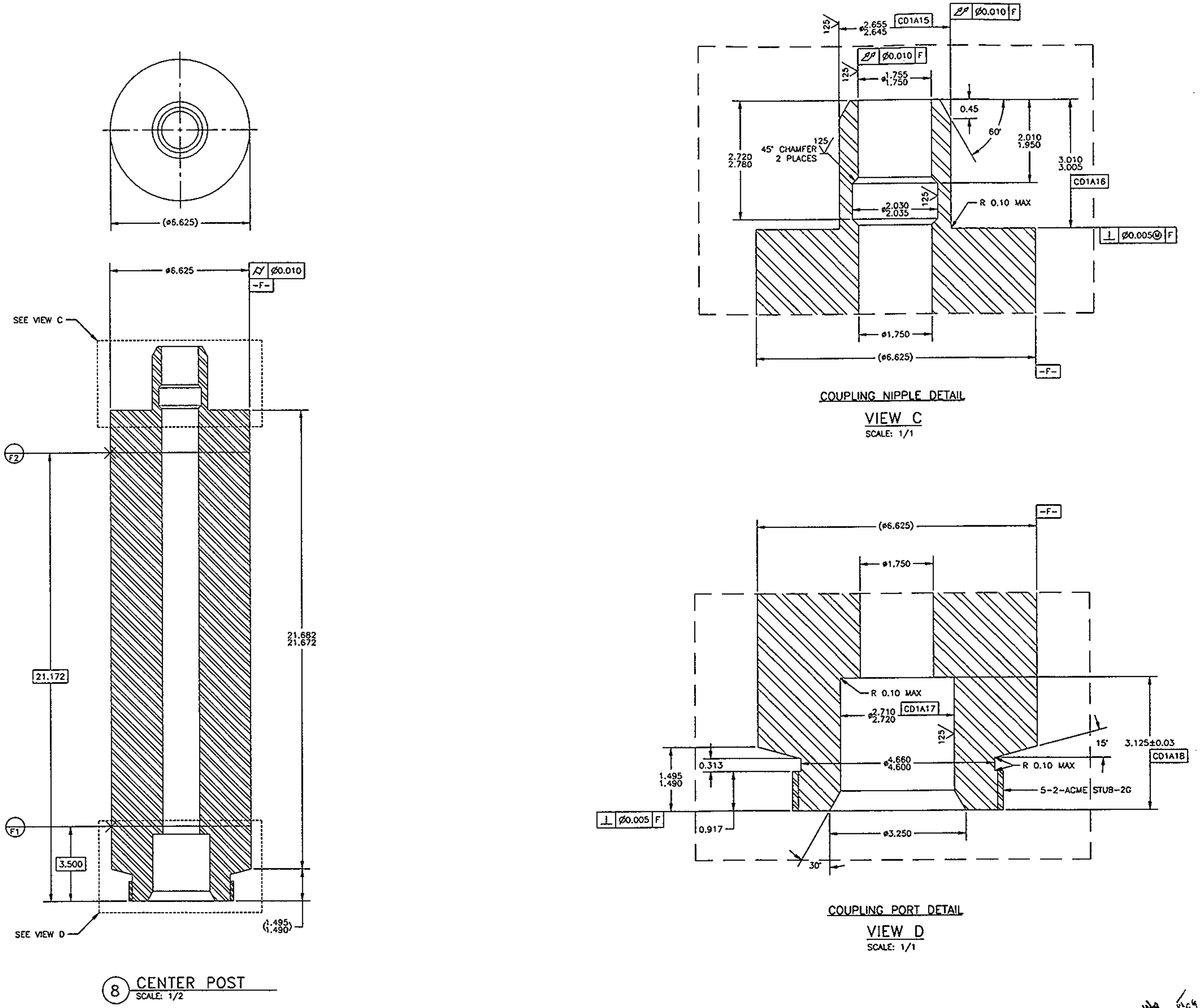

SEE SHEET 1 FOR GENERAL NOTES
SEE SHEET 2 FOR FLAG NOTES

DWG NO	TITLE	REF NUMBER	TITLE	
	DRAWING TRACEABILITY LIST	NEXT USED ON SHEET 2	REFERENCES	

MFG	REV NO	DESCRIPTION	REV BY DATE
RS	3	General Revision per ECN 648629	
	2	General Revision per ECN 648626	7/16/98
	1A		3/14/98

REVISIONS

CADFILE B828065C CADCODE WIN95:ACD3:14.0:SS

J D OSTERLOH
Z SARGENT
R BASTAR
C TEMUS
R BASTAR
DESIGN AGENT PARSONS I & T, INC.

U.S. DEPARTMENT OF ENERGY
Richland Operations Office
Duke Engineering & Services Hanford, Inc.

K-BASIN SNF
SCRAP BASKET
MARK 1A

SIZE	BLDG NO	INDEX NO	DWG NO	REV
F	212-H	3902	H-2-828065	3

SCALE SHOWN SHEET 3 OF

2 PLOT SCALE: 1=1

1 GTITLE.DWG (10/96)

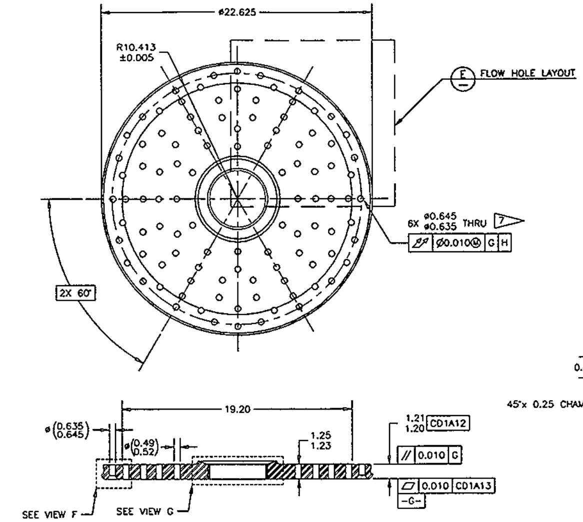

9 **BASE PLATE**
SCALE: 1/4

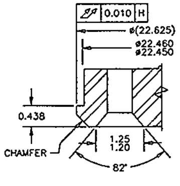

VIEW F
SCALE: 1/1
TYPICAL 6 PLACES

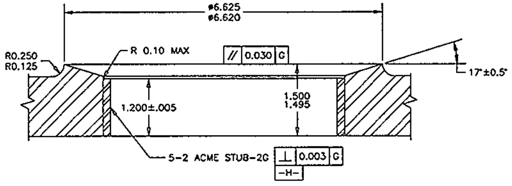

VIEW G
SCALE: 1/1

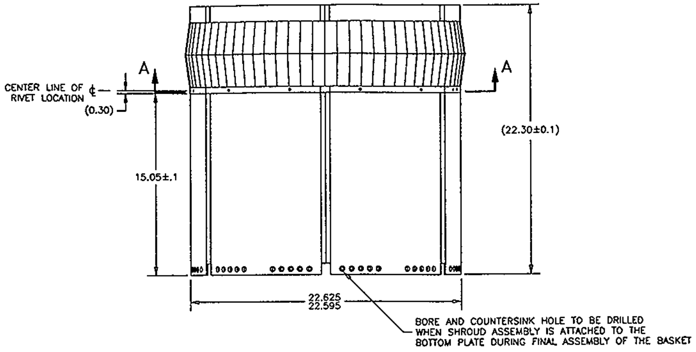

4 **SUBASSEMBLY, SHROUD** 14
SCALE: 1/4

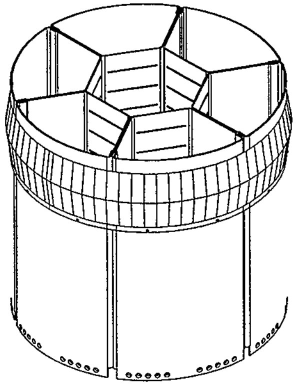

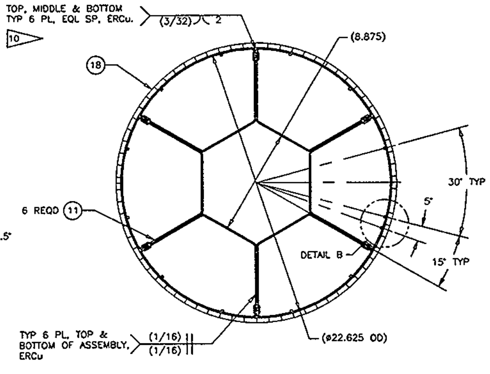

SECTION A-A
SCALE: 1/4

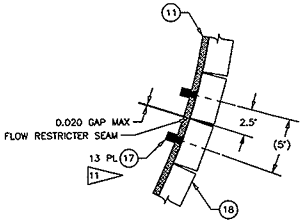

DETAIL B
SCALE: 1/1

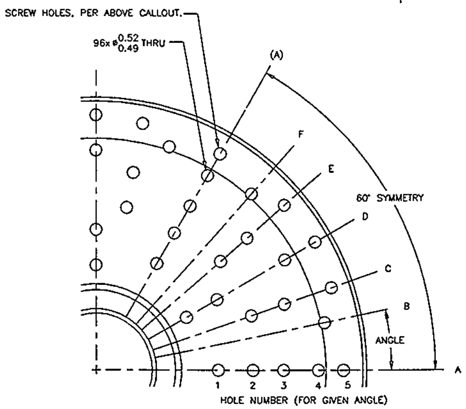

E **FLOW HOLE LAYOUT**
SCALE: NONE

FLOW HOLE LAYOUT							
HOLE NUMBER	HOLE RADIAL DISTANCE FROM CENTER PER ANGLE						
	A	B	C	D	E.	F	(A)
∦	0.00°	11.65°	19.11°	30.00°	40.89°	48.35°	60.00°
5	X						X
4	9.29"			10.57"			9.29"
3	7.83"		10.40"	9.10"	10.40"		7.83"
2	6.54"		8.32"	5.81"	8.32"		6.54"
1	5.08"	9.74"	6.85"	4.34"	6.85"	9.74"	5.08"

1- "X" DENOTES SCREW HOLES, LOCATION SPECIFIED ABOVE.
2- HOLES ARE NUMBERED FROM THE CENTER OUT.

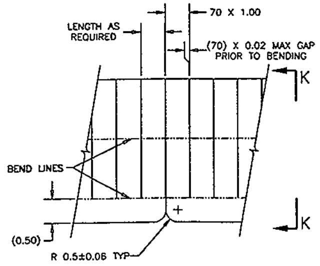

18 **FLOW RESTRICTOR**
SCALE: 1/2

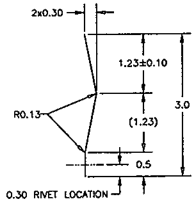

VIEW K-K
SCALE: 1/2

SEE SHEET 1 FOR GENERAL NOTES
SEE SHEET 2 FOR FLAG NOTES

HNF-SD-SNF-DR-003, Rev. 2,
Appendix 1, MCO Drawings
1-29

	REV	DESCRIPTION
RS	3	General Revision per ECN 648629
	2	General Revision per ECN 648626
	1A	

REVISIONS
CADFILE 88280650 CADCODE WIN95:AC03:14.0:SS

DWG NO	TITLE	REF NUMBER	TITLE
DRAWING TRACEABILITY LIST		NEXT USED ON SHEET 2	REFERENCES

J D OSTERLOH 4-17-97
Z SARGENT 4-18-97
R BASTAR (PM) 4-18-97
C TEMUS (CE) 4-18-97
R BASTAR (PM) 4-18-97
PARSONS I & T, INC.

U.S. DEPARTMENT OF ENERGY
Richland Operations Office
Duke Engineering & Services Hanford, Inc.

K-BASIN SNF
SCRAP BASKET
MARK 1A

F 212-H 3902 H-2-828065 3
SCALE SHOWN SHEET 4
PLOT SCALE: 1=1
GTITLE.DWG (10/96)

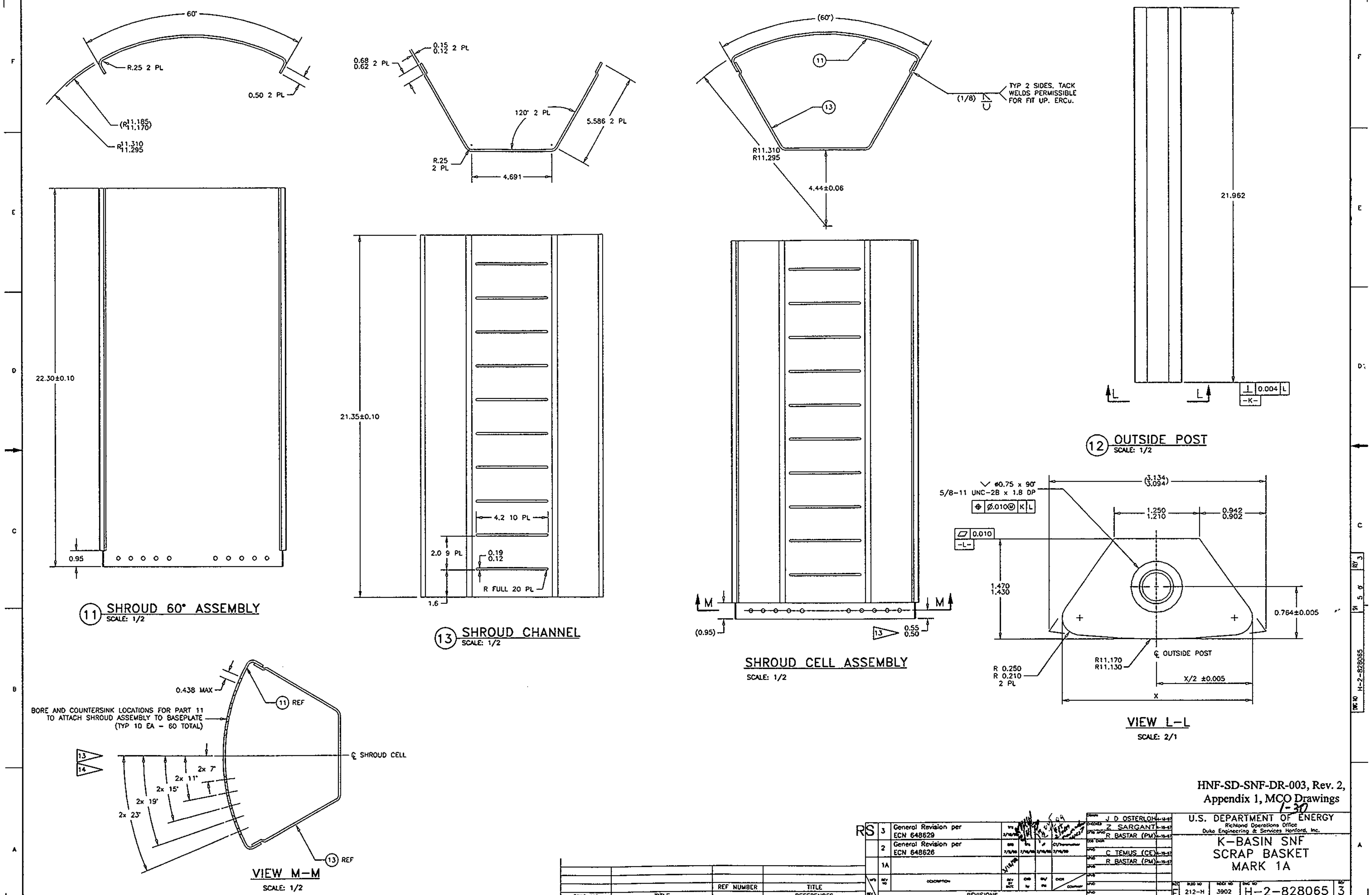

HNF-SD-SNF-DR-003, Rev. 2,
Appendix 1, MCO Drawings
1-30

RS	3	General Revision per ECN 648629	3/16/98
	2	General Revision per ECN 648626	7/9/98
	1A		
	REV NO	DESCRIPTION	

REVISIONS

J D OSTERLOH
Z SARGANT
R BASTAR (PM)
C TEMUS (CE)
R BASTAR (PM)

U.S. DEPARTMENT OF ENERGY
Richland Operations Office
Duke Engineering & Services Hanford, Inc.

K-BASIN SNF
SCRAP BASKET
MARK 1A

SIZE	BLDG NO	INDEX NO	DWG NO	REV
F	212-H	3902	H-2-828065	3

SCALE SHOWN

SHEET 5 OF

DESIGN AGENT PARSONS I & T, INC.

CADFILE B828065E

CADCODE WIN95:ACD3:14.0:SS

DWG NO	TITLE	REF NUMBER	TITLE
DRAWING TRACEABILITY LIST		NEXT USED ON H-2-828041	REFERENCES

2 PLOT SCALE: 1=1

GTITLE.DWG (10/96)

DWG NO H-2-828065 SH 5 REV 3

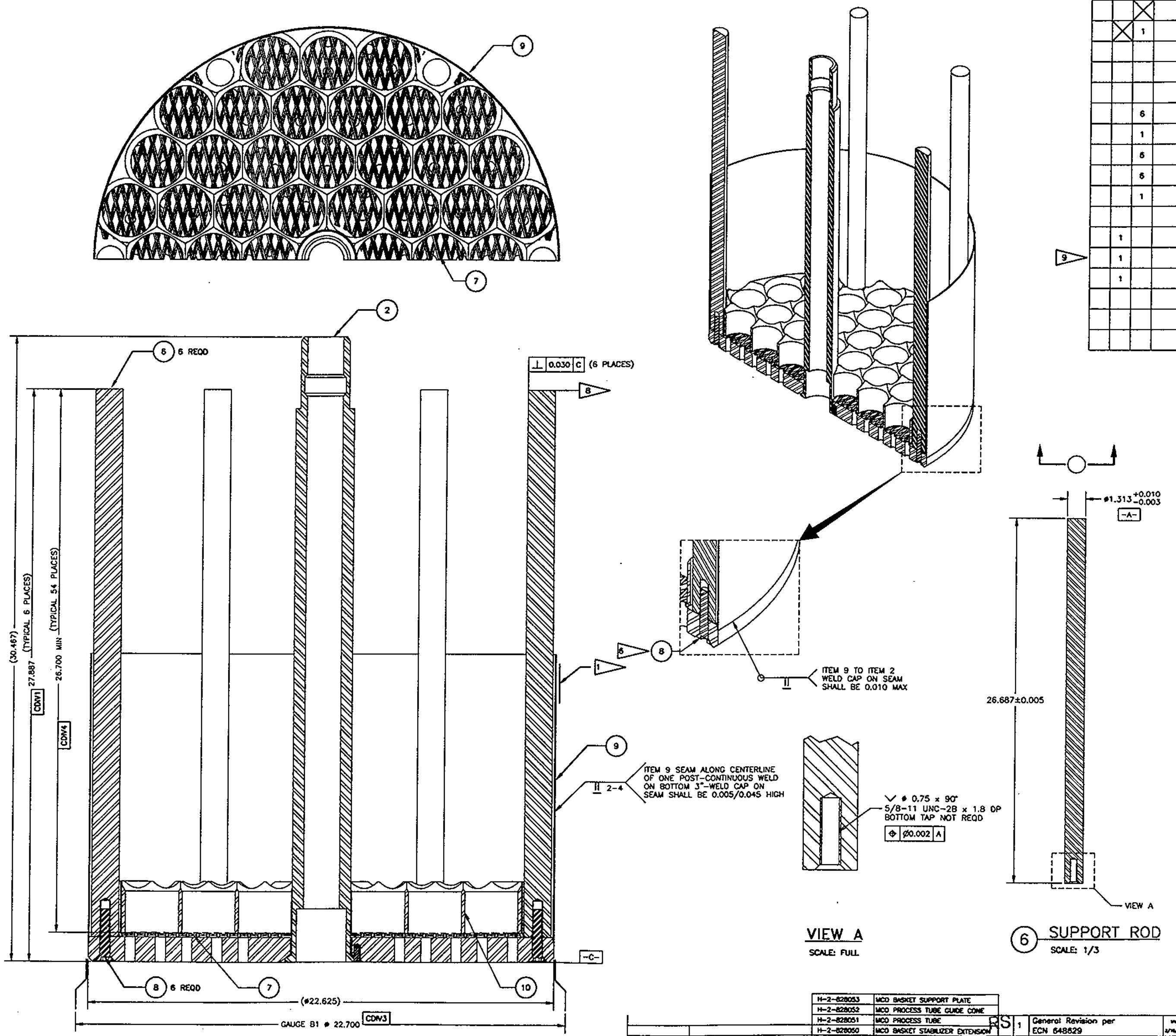

① ASSEMBLY
SCALE: 1/2

VIEW A
SCALE: FULL

⑥ SUPPORT ROD
SCALE: 1/3

PARTS/MATERIAL LIST

QTY REQD -030	QTY REQD -020	QTY REQD -010	PART/DASH NUMBER	NOMENCLATURE/DESCRIPTION	MATERIAL/REFERENCE	SHEET	ITEM NO.
		X	-010	ASSEMBLY		1	1
	X	1	-020	SUBASSEMBLY, BASE PLATE & CENTER POST		3	2
							3
							4
							5
		6	-001	SUPPORT ROD, ROUND BAR, (⌀1 5/16)	ASTM A276, 304/304L SST	1	6
		1	-002	SPACER, EXPANDED METAL APPROX. 0.186 THK	AL 5005H-34	3	7
		6	-003	5/8-11 UNRC-3Ax2.50 HEX SOCKET FLAT COUNTERSUNK HEAD CAP SCREW, PER ANSI/ASME B18.3	ASTM F879, GROUP 1 COND. CW, UNS-S30400	1	8
		6	-004	SHROUD, SHEET METAL 18 GA, (0.048 THK) x 14.0 LENGTH AS REQUIRED	ASTM B-152 UNS C12200-060	1	9
		1	-005	FUEL RACK, WROUGHT OR CAST ALUMINUM PLATE, APPROX. ⌀24.0 x 2.5 THK	ALUMINUM	3	10
							11
	1		-006	BASE PLATE, PLATE (1 1/4)	ASTM A240 DUAL CERT 304/304L SST	2	12
	1		-007	CENTER POST, TUBING OR ROD, ⌀3.75 x 1" WALL	ASTM A511 DUAL CERT MT 304/304L SS	2	13
	1		-008	⌀5/16 COILED SPRING PIN, 0.75 LONG STANDARD OR HEAVY DUTY PER ANSI/ASME B18.2.8.2-95	SAE J405 (30302) OR (30304)	2	14
							15
							16
							17

9 (flag note at item 13)

GENERAL NOTES: (UNLESS OTHERWISE SPEC.)

1. ALL PARTS AND MATERIAL AS SPECIFIED OR BUYER APPROVED EQUAL.
2. ABBREVIATIONS ARE IN ACCORDANCE WITH ANSI/ASME Y1.1-89.
3. WELDING SYMBOLS ARE IN ACCORDANCE WITH ANSI/AWS A2.4-98.
4. SURFACE TEXTURE SYMBOLS ARE IN ACCORDANCE WITH ANSI/ASME Y14.36-96. SURFACE TEXTURE VALUES ARE IN MICROINCHES AND ARE IN ACCORDANCE WITH ANSI/ASME B46.1-95.
5. ALL UNSPECIFIED MACHINED SURFACES SHALL BE $\overset{125}{\surd}$ OR BETTER.
6. REMOVE ALL BURRS AND BREAK ALL SHARP EDGES.
7. ALL UNSPECIFIED MACHINE TOOL RADII SHALL BE 0.03 MAXIMUM.
8. WELDED SURFACES SHALL BE SMOOTH AND UNIFORM IN APPEARANCE WITHOUT ABRUPT CHANGES IN CONTOUR.
9. DIMENSIONING AND TOLERANCING SHALL BE PER ANSI/ASME Y14.5M-94. DIMENSIONS ARE IN INCHES AND APPLY AT 72°F UNLESS OTHERWISE SPECIFIED. UNSPECIFIED TOLERANCES SHALL BE:
   - -DECIMAL: .X ± 0.1, .XX ± 0.03, .XXX ± 0.010
   - -ANGULAR: ± 1°
   - ~~-ALL IMPLIED 90° ANGLES SHALL BE PERPENDICULAR WITHIN THE GREATEST TOLERANCE OF THE LINEAR DIMENSION.~~
10. APPROXIMATE WEIGHT = 228 LB.
11. ~~FABRICATION, WELDING AND INSPECTION SHALL BE IN ACCORDANCE WITH ASME SECTION III DIVISION 1, SUBSECTION NG AND SECTION IX, 1998.~~
12. ~~MATE PARTS IN ACCORDANCE WITH, INTERFERENCE LOCATIONAL FITS PER ANSI/ASME B4.1 1967, R1998.~~
13. ADDITIONAL FABRICATION REQUIREMENTS ARE IN HNF-S-3868, MCO BASKET FABRICATION SPECIFICATION.
14. PIECE / PART TOLERANCES ON THESE DRAWINGS SHOULD LEND TO ACCEPTABLE ASSEMBLY GEOMETRIES. ALTERNATE PIECE / PART TOLERANCES MAY BE UTILIZED WITH THE BUYER'S APPROVAL. ACCEPTABLE FINAL ASSEMBLY GEOMETRIES ARE SHOWN IN THE FABRICATION SPECIFICATION'S CRITICAL DIMENSION TABLES / SKETCHES. IN THE EVENT THAT THERE IS A CONFLICT BETWEEN THE CRITICAL DIMENSION TABLES / SKETCHES AND THE DESIGN DRAWINGS, THE BUYER SHALL BE NOTIFIED FOR RESOLUTION.
15. PARTS WITH DUAL MATERIAL DESIGNATION OF 340/304L SHALL MEET THE REQUIREMENTS OF 304L OR F304L AND HAVE THE FOLLOWING PROPERTIES:
   MINIMUM YIELD STRENGTH = 30 KSI @ 70 °F
   MINIMUM TENSILE STRENGTH = 75 KSI @ 70 °F
16. PRIOR TO ASSEMBLY ALL THREAD AND CONTACT SURFACES OF ALL THREADED PARTS SHALL BE BRUSHED WITH NEOLUBE (GRAPHITE/ALCOHOL) TO PROVIDE A COMPLETE SURFACE COATING.
17. CRITICAL DIMENSIONS ARE IDENTIFIED BY THE SYMBOL $\boxed{CD\_\_}$ AND ARE LISTED AND DEFINED IN THE FABRICATION SPECIFICATION. METHODS OF MEASUREMENT AND GAUGING ARE ALSO DEFINED IN THE SPECIFICATION.

SEE SHEET 2 FOR FLAG NOTES

HNF-SD-SNF-DR-003, Rev. 2,
Appendix 1, MCO Drawings
1-31

REF NUMBER	TITLE
H-2-828053	MCO BASKET SUPPORT PLATE
H-2-828052	MCO PROCESS TUBE GUIDE CONE
H-2-828051	MCO PROCESS TUBE
H-2-828050	MCO BASKET STABILIZER EXTENSION
H-2-828045	MCO SHIELD PLUG
NEXT USED ON	H-2-828041

REFERENCES

DWG NO	TITLE

DRAWING TRACEABILITY LIST

REV	DESCRIPTION
RS 1	General Revision per ECN 648629

REVISIONS

CADFILE B828070A
CADCODE WIN95:AC03:14.0:SS

BT BECKER
JD OSTERLOH
R BASTAR (PM)
C TEMUS (CE)
R BASTAR (PM)
PARSONS I & T, INC.

U.S. DEPARTMENT OF ENERGY
Richland Operations Office
Duke Engineering & Services Hanford, Inc.

MCO MARK IV SNF
STORAGE BASKET

F | 212-H | 3902 | H-2-828070 | 1
SCALE SHOWN
SHEET 1 OF 4
PLOT SCALE: 1=1
GTITLE.DWG (10/96)

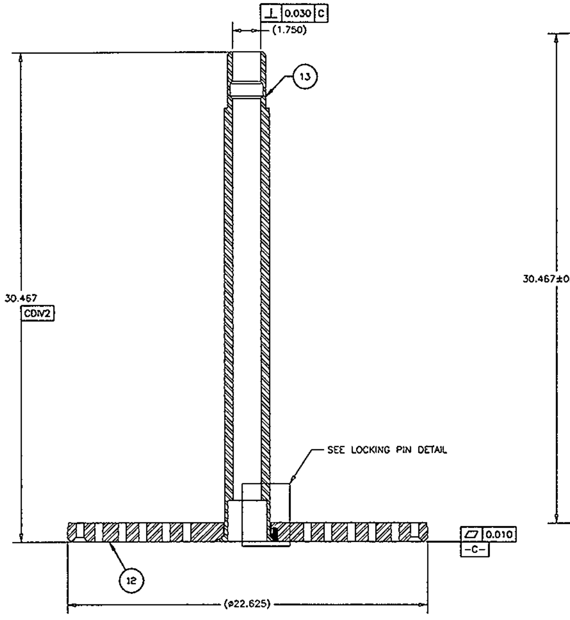

② SUBASSEMBLY, BASEPLATE & CENTER POST 2 7

SCALE: 1/3

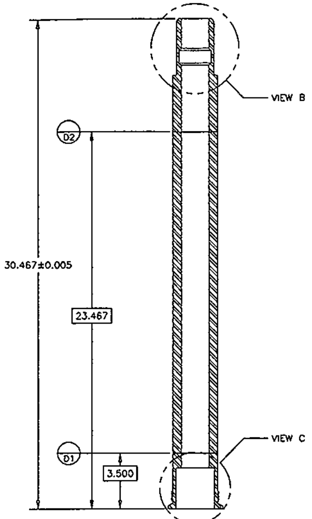

⑬ CENTER POST

SCALE: 1/3

NOTES:

1. IDENTIFY PER SECTION 6.4.3 OF HNF-S-0453, FABRICATION SPECIFICATION FOR MULTI-CANISTER OVERPACK, WITH SERIAL NUMBER IN APPROX. LOCATION SHOWN.
2. FINAL MACHINING OF THE CENTER POST AND BASE PLATE MAY BE DONE EITHER BEFORE AOR AFTER ASSEMBLY OF THE BASEPLATE AND CENTER POST, AS LONG AS FINISHED DIMENSIONS AND TOLERANCES ARE MET.
3. WELDING AND NDE SHALL BE IN ACCORDANCE WITH ASME B & PV CODE, 1998 EDITION, SECTION III, DIVISION 1, SUBSECTION NG.
4. BASE PLATE HOLES FOR THE ATTACHMENT OF THE SIDEPOSTS MAY BE DRILLED BEFORE OR AFTER ASSEMBLY OF THE BASE PLATE AND THE CENTER POST, PROVIDED THE SPECIFIED LOCATIONAL TOLERANCE OF THESE HOLES IS MET ON THE SUBASSEMBLY.
5. A HELICAL CONTOUR, NOT TO EXCEED 0.005 IN DEPTH IS ACCEPTABLE IN THE ø2.580 FUEL RACK (PN 10) HOLES.
6. THE SCREWS USED TO ATTACH THE SUPPORT RODS TO THE BASE PLATE WILL BE TIGHTENED USING 60 ± 8 FT-LB TORQUE.
7. THE CENTER POST WILL BE SCREWED INTO THE BASE PLATE AND TIGHTENED USING 287.5 ± 12.50 FT-LB TORQUE.
8. THE TOP SURFACE OF THE OUTSIDE POST NEAREST THE BACKET SERIAL NUMBER SHALL BE COLOR MARKED TO FACILITATE BASKET LOADING. DETAILS REGARDING THIS MARKING SHALL BE PROVIDED BY THE FABRICATOR ON HIS SHOP DRAWINGS.
9. ALTERNATE MATERIAL, ASTM A479 DUAL CERT. 304/304L.

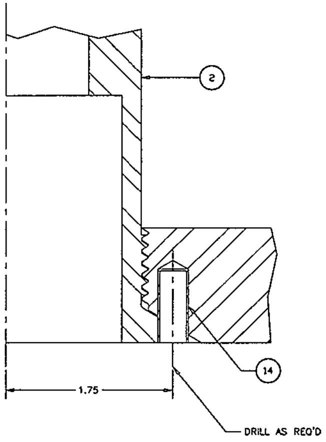

LOCKING PIN DETAIL

SCALE: 2/1

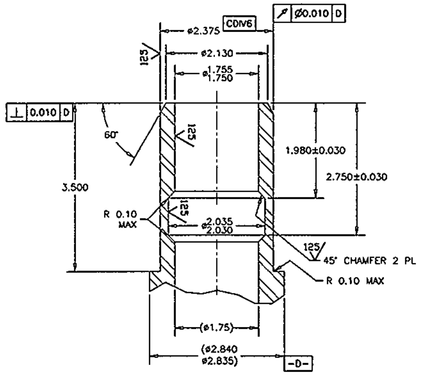

COUPLING NIPPLE DETAIL

VIEW B

SCALE: FULL

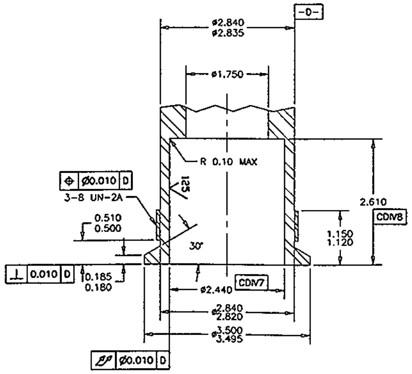

COUPLING PORT DETAIL

VIEW C

SCALE: FULL

SEE SHEET 1 FOR GENERAL NOTES

HNF-SD-SNF-DR-003, Rev. 2,
Appendix 1, MCO Drawings
1-32

DWG NO	TITLE	REF NUMBER	TITLE
DRAWING TRACEABILITY LIST		NEXT USED ON SHEET 1	REFERENCES

S	1	General Revision per ECN 648629	
REV	REV NO	DESCRIPTION	
REVISIONS			

CADFILE B828070B CADCODE WIN95:ACD3:14.0:SS

DRAWN	TF KUYKENDALL
CHECKED	JD OSTERLOH
ENG APPD	R BASTAR
APPD	C TEMUS (CE)
APPD	R BASTAR (PM)
APPD	J TANKE (QA)
DESIGN AGENT	PARSONS I & T, INC.

U.S. DEPARTMENT OF ENERGY
Richland Operations Office
Duke Engineering & Services Hanford, Inc.

MCO MARK IV SNF
STORAGE BASKET

SIZE	BLDG NO	INDEX NO	DWG NO	REV
F	212-H	3902	H-2-828070	1

SCALE SHOWN SHEET 2 OF

PLOT SCALE: 1=1

GTITLE.DWG (10/96)

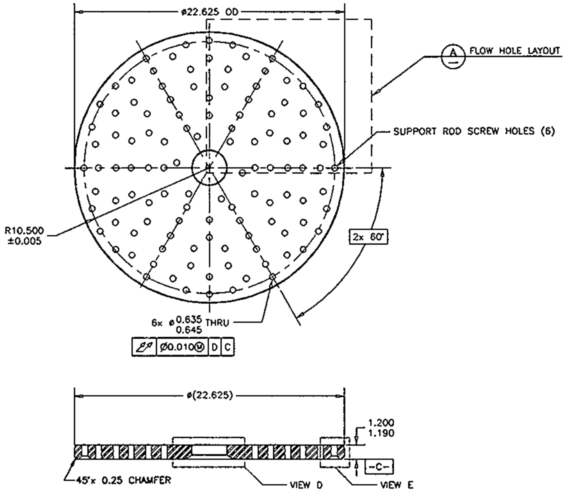

⑫ BASE PLATE

SCALE: 1/4

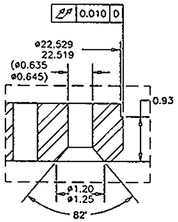

VIEW E

SCALE: FULL

TYPICAL 6 PLACES

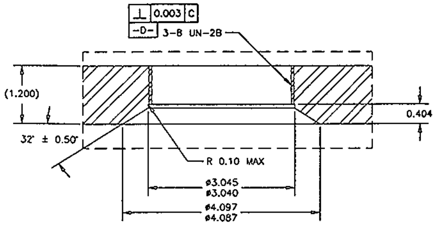

VIEW D

SCALE: FULL

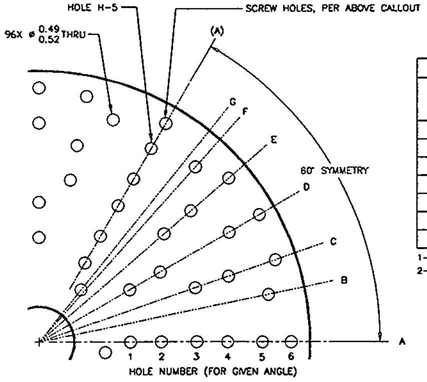

Ⓐ FLOW HOLE LAYOUT

SCALE: NONE

FLOW HOLE LAYOUT								
HOLE NUMBER	HOLE RADIAL DISTANCE FROM CENTER PER ANGLE							
	A	B	C	D	E	F	G	(A)
∮	0.00°	11.65°	19.11°	30.00°	40.89°	48.35°	51.27°	60.0°
6	X							X
5	9.29"							9.29"
4	7.83"			10.57"				7.83"
3	6.54"		10.40"	9.10"	10.40"			6.54"
2	5.08"		8.32"	5.81"	8.32"			5.08"
1	3.79"	9.74"	6.85"	4.34"	6.85"	9.74"	2.78"	3.79"

1– "X" DENOTES SCREW HOLES, LOCATION SPECIFIED ABOVE.
2– HOLES ARE NUMBERED FROM THE CENTER OUT.

SEE SHEET 1 FOR GENERAL NOTES
SEE SHEET 2 FOR FLAG NOTES

HNF-SD-SNF-DR-003, Rev. 2,
Appendix 1, MCO Drawings
1-33

DWG NO	TITLE	REF NUMBER	TITLE
DRAWING TRACEABILITY LIST		NEXT USED ON SHEET 1	REFERENCES

RS 1 General Revision per ECN 648629

REVISIONS

CADFILE B828070C CADCODE WIN95:ACD3:14.0:SS

TF KUYKENDALL
JD OSTERLOH
R BASTAR
C TEMUS (CE)
R BASTAR (PM)
J TANKE (QA)
PARSONS I & T, INC.

U.S. DEPARTMENT OF ENERGY
Richland Operations Office
Duke Engineering & Services Hanford, Inc.

MCO MARK IV SNF
STORAGE BASKET

F 212-H 3902 H-2-828070 1

SCALE SHOWN SHEET 3 OF

☐ CHK PRINT ☐ DATE
☐ COMMENT PRINT ☐ DATE

2 PLOT SCALE: 1=1

1 CTITLE.DWG (10/96)

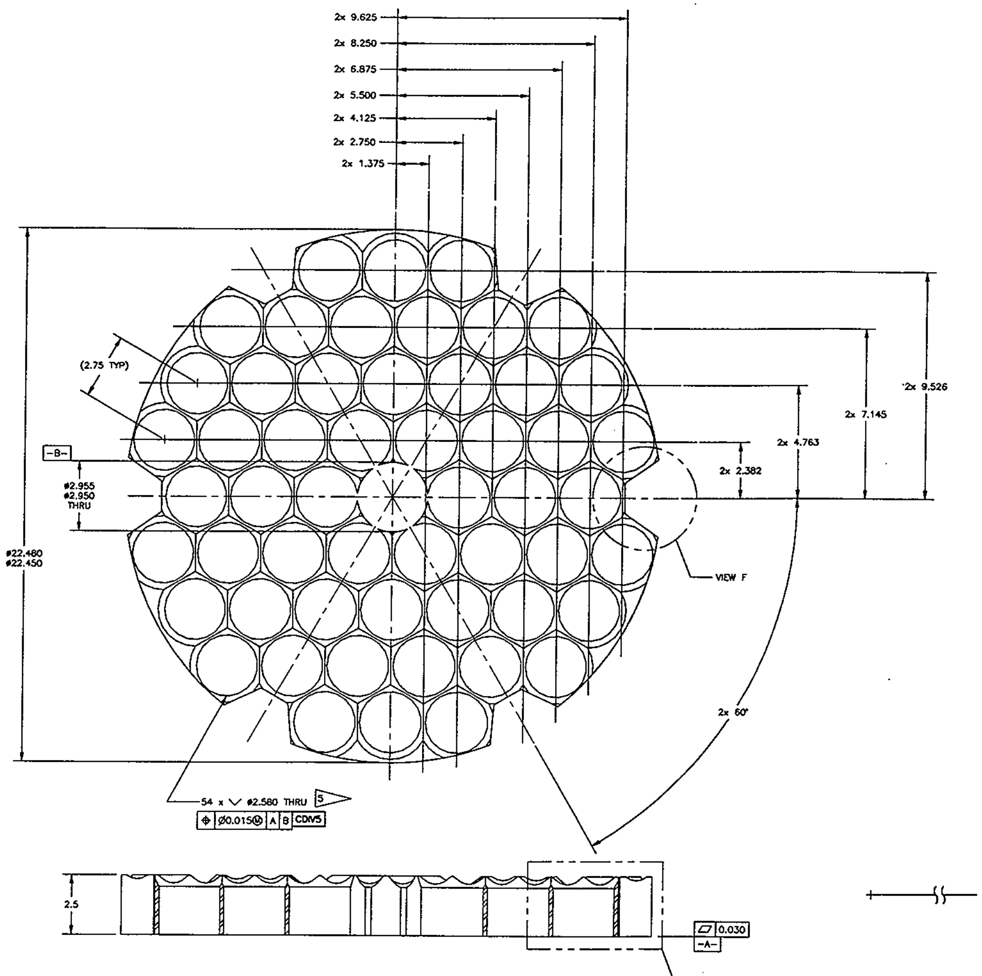

⑩ FUEL RACK
SCALE: 1/2

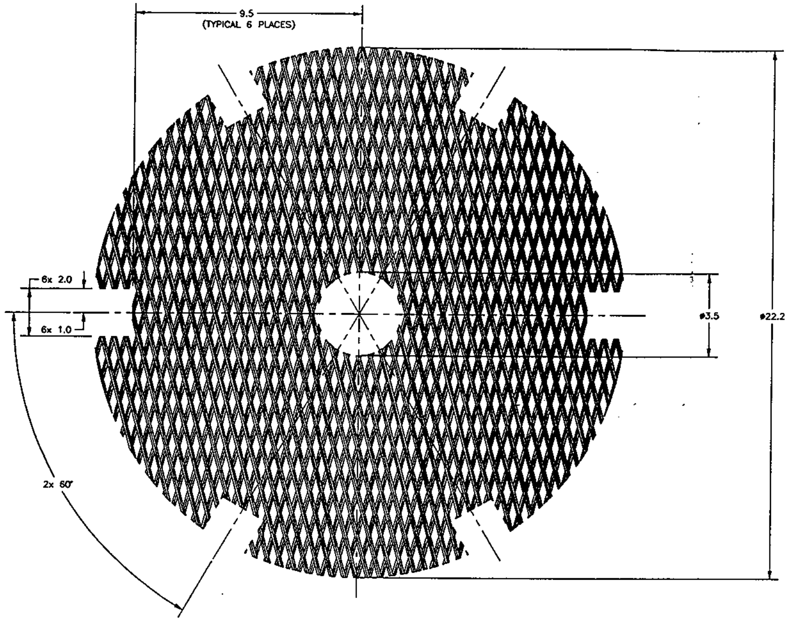

⑦ SPACER
SCALE: 1/2

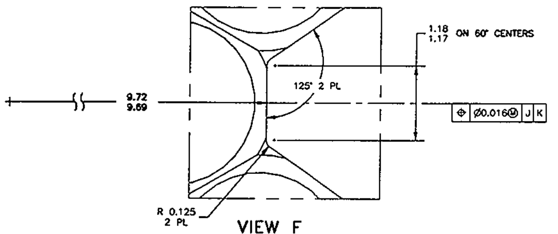

VIEW F
SCALE: NONE
TYPICAL 6 PLACES

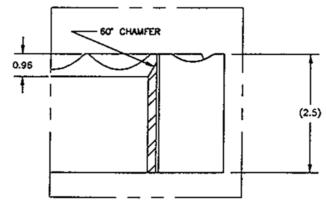

VIEW G
SCALE: NONE
TYPICAL 54 PLACES

SEE SHEET 1 FOR GENERAL NOTES
SEE SHEET 2 FOR FLAG NOTES

DATE: FEB 18 1999
STA. 4
HANFORD
RELEASE
ID: 22
56

HNF-SD-SNF-DR-003, Rev. 2,
Appendix 1, MCO Drawings
1-34

U.S. DEPARTMENT OF ENERGY
Richland Operations Office
Duke Engineering & Services Hanford, Inc.

MCO MARK IV SNF
STORAGE BASKET

F 212-H 3902 H-2-828070 0
PARSONS I & T, INC. SHOWN SHEET 4
2-10-99
2-8-99
2-4-99
2/1/99
2-17-99

DWG NO	TITLE	REF NUMBER	TITLE
DRAWING TRACEABILITY LIST		NEXT USED ON	SHEET 1

REFERENCES
REVISIONS
CADFILE 88280700 CADCODE WIN95:AC03:14.0:SS
PLOT SCALE: 1=1
CTITLE.DWG (10/96)

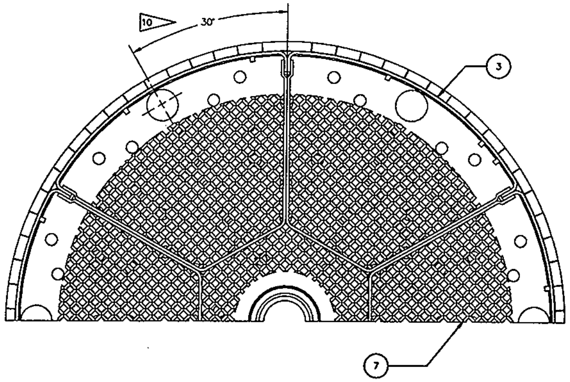

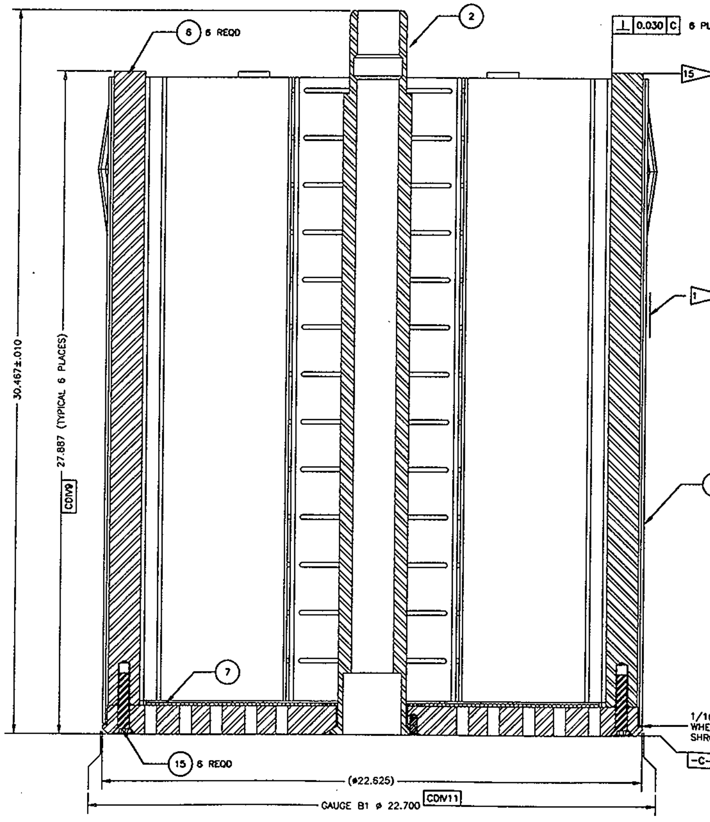

① ASSEMBLY
SCALE: 1/2

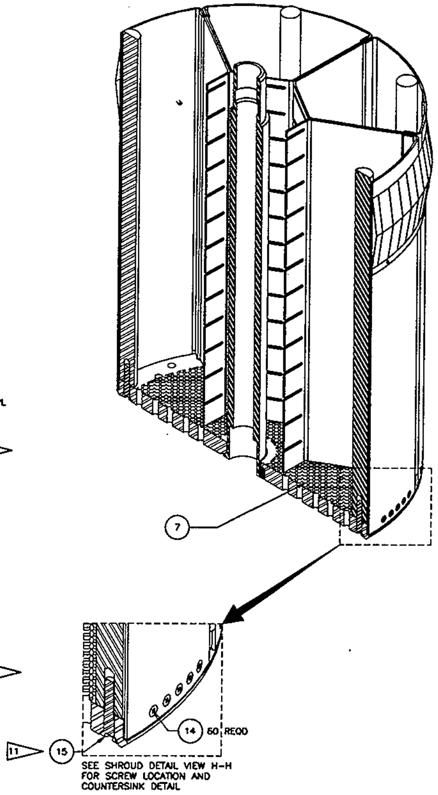

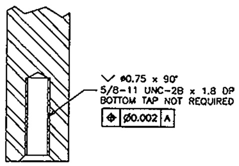

VIEW A
SCALE: FULL

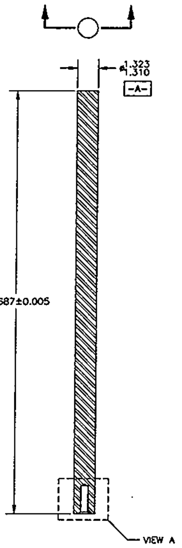

⑥ SUPPORT ROD
SCALE: 1/3

PARTS/MATERIAL LIST

QTY REQD -030	QTY REQD -020	QTY REQD -010	PART/DASH NUMBER	NOMENCLATURE/DESCRIPTION	MATERIAL/REFERENCE	SHEET	ITEM NO.
		X	-010	ASSEMBLY		1	1
	X	1	-020	SUBASSEMBLY, BASE PLATE & CENTER POST		2	2
X		1	-030	SUBASSEMBLY, COPPER SHROUD SECTIONS		4	3
							4
							5
		6	-001	SUPPORT ROD, ROUND BAR	ASTM A276, TP 304/ 304L DUAL CERTIFIED	1	6
		1	-002	BOTTOM SCREEN	304 SST	3	7
	1		-003	CENTER POST, TUBING OR BAR, ⌀3.75 x (1.00 WALL)	ASTM A511 DUAL CERT MT 304/304L SS	2	8
	~~1~~		~~-004~~	~~BUSHING, ⌀4.00" OD x 0.6425" WALL~~	~~ASTM A 479~~ ~~304L SST~~	~~2~~	9
	1		-005	BASE PLATE, PLATE AS REQD	ASTM A240 DUAL CERT 304/304L SS	3	10
6			-006	SHROUND, 60° SEGMENT APPROX 29.32 x 27.02 x 0.125 THK	ASTM B-152 UNS, C12200-060	4	11
1			-009	FLOW RESTRICTER, 0.013 THK x 6 x (71) x (1 1/4)	ASTM B-103 UNO C51000-H08	4	12
6			-011	SHROUD CHANNEL, 0.125 THK	ASTM B-152 UNS C12200-060	4	13
		60		12-14 x 1/2-TYPE F SQUARE DRIVE FLAT HEAD SELF TAPPING SCREW	18-8 STAINLESS STEEL	1	14
		6		5/8-11 UNRC-3A x 2.5 LG COUNTERSUNK HEAD CAP SCREW, PER ANSI/ASME B18.3	ASTM F879, GROUP I, COND CW UNS-S30400	1	15
	1			5/16" COILED SPRING PIN, 0.75 LG, STD OR HEAVY DUTY PER ANSI/ASME B18.8.2-94	SAE J405 (30302) OR (30304)		16
13				COUNTERSUNK FLUSH HEAD BLIND RIVET SERIES NO.4, RIVET NO. 43	GRADE 51, IFI-114 STAINLESS STEEL	4	17

Flag notes 6 and 2 stand beside items 7 and 8.

GENERAL NOTES: (UNLESS OTHERWISE SPECIFIED)

1. ALL PARTS AND MATERIAL AS SPECIFIED OR BUYER APPROVED EQUAL.
2. ABBREVIATIONS ARE IN ACCORDANCE WITH ANSI/ASME Y1.1-89.
3. WELDING SYMBOLS ARE IN ACCORDANCE WITH ANSI/AWS A2.4-93.
4. SURFACE TEXTURE SYMBOLS ARE IN ACCORDANCE WITH ANSI/ASME Y14.36-96. SURFACE TEXTURE VALUES ARE IN MICROINCHES AND ARE IN ACCORDANCE WITH ANSI/ASME B46.1-95.
5. ALL UNSPECIFIED MACHINED SURFACES SHALL BE $\overset{125}{\surd}$ OR BETTER.
6. REMOVE ALL BURRS AND BREAK ALL SHARP EDGES.
7. ALL UNSPECIFIED MACHINE TOOL RADII SHALL BE 0.03 MAXIMUM.
8. WELDED SURFACES SHALL BE SMOOTH AND UNIFORM IN APPEARANCE WITHOUT ABRUPT CHANGES IN CONTOUR.
9. DIMENSIONING AND TOLERANCING SHALL BE PER ANSI/ASME Y14.5M-82. DIMENSIONS ARE IN INCHES AND APPLY AT 72°F UNLESS OTHERWISE SPECIFIED. UNSPECIFIED TOLERANCES SHALL BE:
   -DECIMAL: .X ± 0.1, .XX ± 0.03, .XXX ± 0.010
   -ANGULAR: ± 1°
   ~~-ALL IMPLIED 90° ANGLES SHALL BE PERPENDICULAR WITHIN THE GREATEST TOLERANCE OF THE LINEAR DIMENSION.~~
10. APPROXIMATE WEIGHT = 432 LB.
11. ~~FABRICATION, WELDING AND INSPECTION SHALL BE IN ACCORDANCE WITH ASME SECTION III DIVISION 1, SUBSECTION NG AND SECTION IX, 1998.~~
12. ~~MATE PARTS IN ACCORDANCE WITH, INTERFERENCE LOCATIONAL FITS PER ANSI/ASME B4.1-1967, R1998.~~
13. ADDITIONAL FABRICATION REQUIREMENTS ARE IN HNF-S-3868, MCO BASKET FABRICATION SPECIFICATION.
14. PIECE / PART TOLERANCES ON THESE DRAWINGS SHOULD LEND TO ACCEPTABLE ASSEMBLY GEOMETRIES. ALTERNATE PIECE / PART TOLERANCES MAY BE UTILIZED WITH THE BUYER'S APPROVAL. ACCEPTABLE FINAL ASSEMBLY GEOMETRIES ARE SHOWN IN THE FABRICATION SPECIFICATION'S CRITICAL DIMENSION TABLES / SKETCHES. IN THE EVENT THAT THERE IS A CONFLICT BETWEEN THE CRITICAL DIMENSION TABLES / SKETCHES AND THE DESIGN DRAWINGS, THE BUYER SHALL BE NOTIFIED FOR RESOLUTION.
15. PARTS WITH DUAL MATERIAL DESIGNATION OF 304/304L SHALL MEET THE REQUIREMENTS OF 304L OR F304L AND HAVE THE FOLLOWING PROPERTIES:
    MINIMUM YIELD STRENGTH = 30 KSI @ 70 °F
    MINIMUM TENSILE STRENGTH = 75 KSI @ 70 °F
16. CRITICAL DIMENSIONS ARE IDENTIFIED BY THE SYMBOL $\boxed{CD\_\_}$ AND ARE LISTED AND DEFINED IN THE FABRICATION SPECIFICATION. METHODS OF MEASUREMENT AND GAUGING ARE ALSO DEFINED IN THE SPECIFICATION.
17. PRIOR TO ASSEMBLY ALL THREAD AND CONTACT SURFACES OF ALL THREADED PARTS (EXCEPT SELF-TAPPING SCREWS, PART NO 14) SHALL BE BRUSHED WITH NEOLUBE (GRAPHITE/ALCOHOL) TO PROVIDE A COMPLETE SURFACE COATING.

SEE SHEET 2 FOR FLAG NOTES

HNF-SD-SNF-DR-003, Rev. 2,
Appendix 1, MCO Drawings
1-35

DWG NO	TITLE	REF NUMBER	TITLE
DRAWING TRACEABILITY LIST		NEXT USED ON	REFERENCES
			H-2-828041

REV	DESCRIPTION	REV BY DATE	CHKD BY	OA/PM	CHCR COMPANY
RS 3	Revision per ECN 648629				
2	General Revision per ECN 648626	BRB 7/8/98	TPE 7/16/98	JB 7/16/98	CIC/Reconciliation 7/16/98

REVISIONS

CADFILE B828075A CADCODE WIN95:ACD3:14.0:SS

BT BECKER 4-16-97
JD OSTERLOH 4-16-97
R BASTAR (PM) 4-16-97
C TEMUS (CE) 4-16-97
R BASTAR (PM) 4-16-97
PARSONS I & T, INC.

U.S. DEPARTMENT OF ENERGY
Richland Operations Office
Duke Engineering & Services Hanford, Inc.

MCO MARK IV SNF
SCRAP BASKET

SIZE F BLDG NO 212-H INDEX NO 3902 DWG NO H-2-828075 REV 3
SCALE SHOWN SHEET 1 OF 4

PLOT SCALE: 1=1
GTITLE.DWG (10/96)

DWG NO H-2-828075 SH 1 OF 4 REV 3

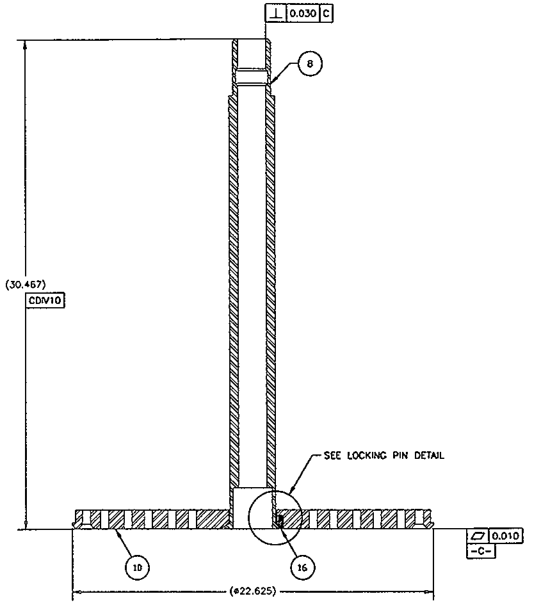

② SUBASSEMBLY, BASE PLATE & CENTER POST 12

SCALE: 1/3

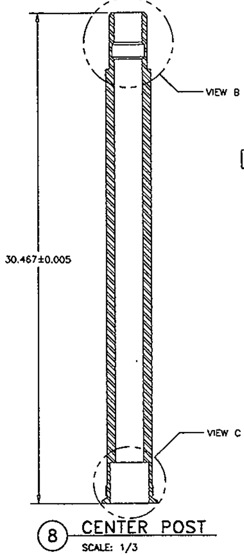

⑧ CENTER POST

SCALE: 1/3

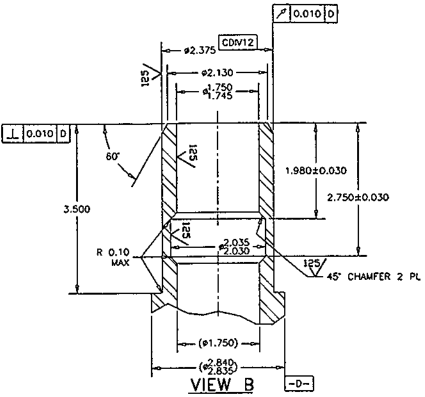

VIEW B

SCALE: FULL

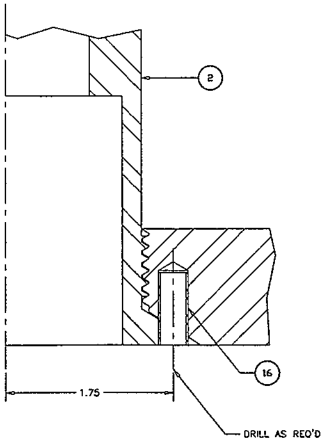

LOCKING PIN DETAIL

SCALE: 2/1

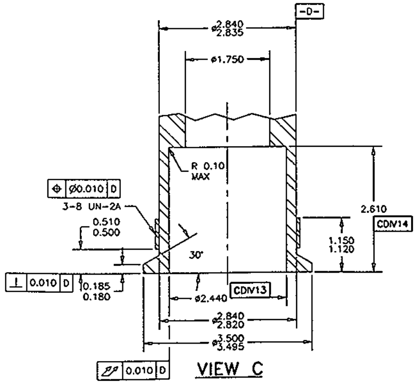

VIEW C

SCALE: FULL

NOTES:

1. IDENTIFY PER SECTION 6.4.3 OF HNF-S-0453, FABRICATION SPECIFICATION FOR MULTI-CANISTER OVERPACK, WITH SERIAL NUMBER IN APPROX. LOCATION SHOWN.
2. ALTERNATE MATERIAL, ASTM A-479 DUAL CERTIFIED 304/304L.
3. ~~COPPER SHROUD & DIVIDER SUBASSEMBLY IS TO BE SILVER BRAZED TOGETHER PRIOR TO INSTALLATION INTO THE STRUCTURE.~~
4. ~~THE 0.125 SLOTS MUST MAINTAIN A MINIMUM OF 0.75 BETWEEN COLUMNS AND 0.25 FROM THE DIVIDER (PART 12) LOCATION. NOTCH THE LAP JOINT OF ITEM 13 AS NECESSARY TO CLEAR BASE PLATE AT FINAL ASSEMBLY.~~
5. ~~OVERLAY A SINGLE PASS SST WELD ON THE BASE PLATE IN THE AREA WHERE THE SHROUD IS TO BE JOINED. THE WELD ATTACHING THE COPPER TO THE BASE PLATE SHALL BE MADE TO THE OVERLAY WELD AND NOT TO THE BASE METAL OF THE BASE PLATE.~~
6. WIRE MESH SCREEN, 304 SS, 1/8" x 1/8", WIRE DIAMETER 0.047", % OF OPEN AREA 52.8% OR APPROVED EQUIVALENT.
7. ALTERNATE JOINT CONSTRUCTION DETAILS (LAP, FLANGED, OR OTHER) SHALL BE SUBMITTED TO THE BUYER FOR APPROVAL.
8. PREPARE HOLES FOR A BLIND FLUSH HEAD RIVET AS NEEDED TO ALLOW FOR A FLUSH OR RECESSED INSTALLATION.
9. DRILL THE BORE AND COUNTERSINK HOLES FOR THE SHROUD ATTACHMENT SCREWS DURING FINAL ASSEMBLY WHEN THE SHROUD SUBASSEMBLY IS MATED TO THE BASE PLATE AND CENTER POST SUBASSEMBLY. BORE SIZE AND DEPTH WILL HAVE TO BE DETERMINED THROUGH TRIAL AND ERROR PRIOR TO PRODUCTION.
10. ALIGNMENT OF THE SUPPORT RODS WITH THE CENTERS OF THE SHROUD CELLS WILL ALLOW ATTACHING THE SHROUD SUBASSEMBLY WITHOUT INTERFERING WITH THE SUPPORT ROD ATTACHMENT SCREWS.
11. THE SCREWS USED TO ATTACH THE SUPPORT RODS TO THE BASE PLATE WILL BE TIGHTENED USING 60 ± 8 FT-LB TORQUE.
12. THE CENTER POST WILL BE SCREWED INTO THE BASE PLATE AND TIGHTENED USING 287.5 ±12.5 FT-LB TORQUE
13. ~~THOROUGHLY BRUSH THREAD AND CONTACT SURFACES OF THREADED PARTS WITH NEOLUBE #2 (NEOLUBE "0" GRAPHITE/ALCOHOL) PRIOR TO ASSEMBLY.~~
14. FINAL MACHNINING OF THE CENTER POST AND BASE PLATE MAY BE DONE EITHER BEFORE OR AFTER ASSEMBLY AS LONG AS FINISHED DIMENSIONS AND TOLERANCES ARE MET.
15. THE TOP SURFACE OF THE OUTSIDE POST NEAREST THE BASKET SERIAL NUMBER SHALL BE COLOR MARKED TO FACILITATE BASKET LOADING. DETAILS REGARDING THIS MARKING SHALL BE PROVIDED BY THE FABRICATOR ON HIS SHOP DRAWINGS.

SEE SHEET 1 FOR GENERAL NOTES

DWG NO	TITLE	REF NUMBER	TITLE
DRAWING TRACEABILITY LIST		NEXT USED ON SHEET 1	REFERENCES

	REV NO	DESCRIPTION	
RS	3	General Revision per ECN 648629	7/16/98
	2	General Revision per ECN 648626	7/16/98

REVISIONS

CADFILE 8828075B | CADCODE WIN95:AC03:14.0:SS

TF KUYKENDALL 8-21-97
JD OSTERLOH 9-3-97
R BASTAR 9-3-97
C TEMUS (CE) 9-3-97
R BASTAR (PM) 9-3-97
J TANKE (QA) 9-3-97
PARSONS I & T, INC.

U.S. DEPARTMENT OF ENERGY
Richland Operations Office
Duke Engineering & Services Hanford, Inc.

MCO MARK IV SNF
SCRAP BASKET

F | 212-H | 3902 | H-2-828075 | 3

SCALE SHOWN | SHEET 2 OF

2 PLOT SCALE: 1=1

CTITLE.DWG (10/96)

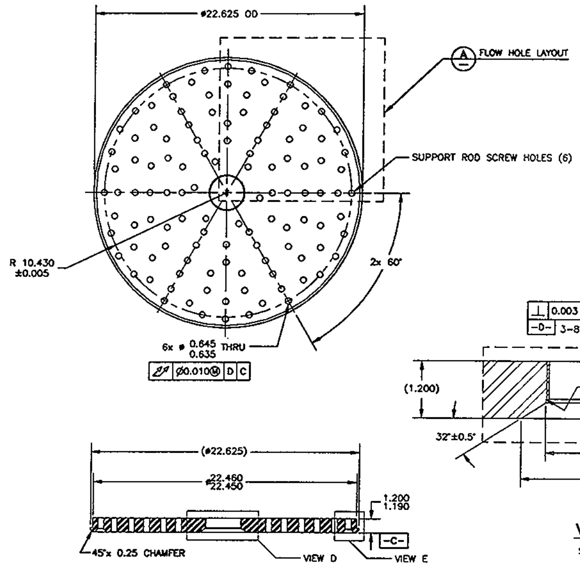

⑩ BASE PLATE 14

SCALE: 1/4

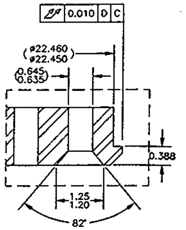

VIEW E

SCALE: FULL

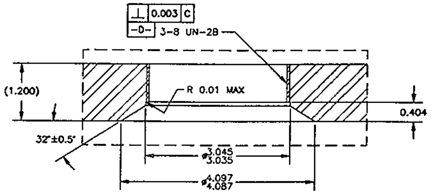

VIEW D

SCALE: FULL

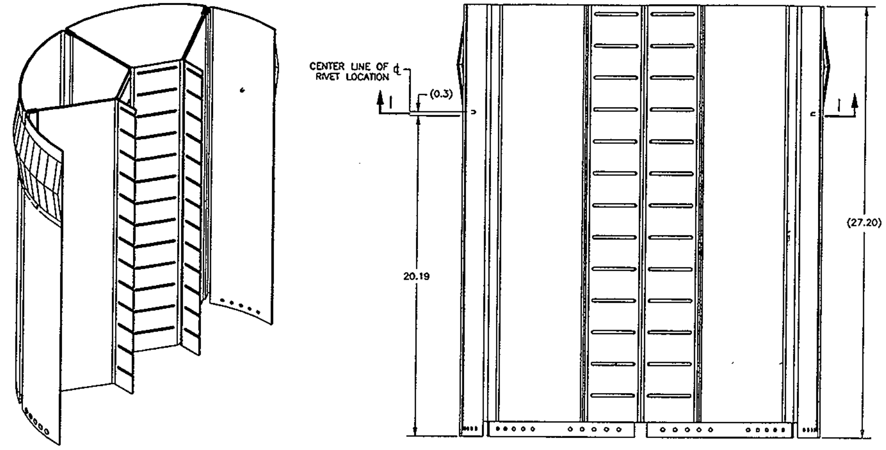

③ SUBASSEMBLY, COPPER SHROUD & DIVIDERS

SCALE: 1/3

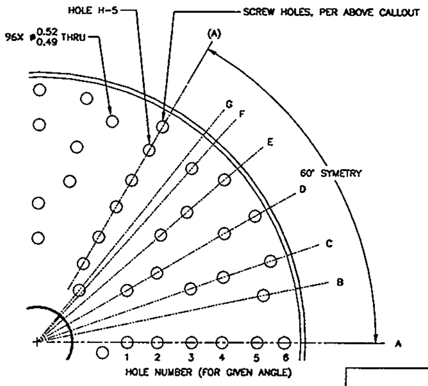

Ⓐ FLOW HOLE LAYOUT

SCALE: NONE

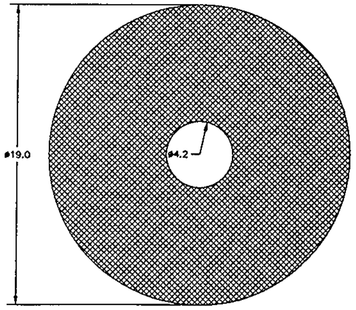

⑦ BOTTOM SCREEN 6

SCALE: 1/3

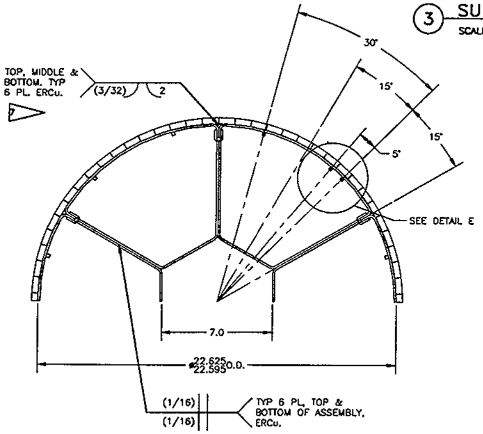

VIEW I–I

SCALE: 1/3

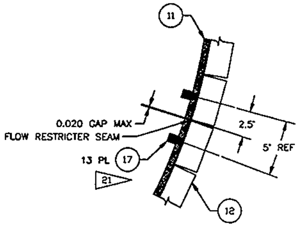

DETAIL E

SCALE: 1/1

HOLE NUMBER	FLOW HOLE LAYOUT HOLE RADIAL DISTANCE FROM CENTER PER ANGLE							
	A	B	C	D	E	F	G	(A)
∮	0.00°	11.65°	19.11°	30.00°	40.89°	48.35°	51.27°	60.0°
6	X							X
5	9.29"							9.29"
4	7.83"			10.57"				7.83"
3	6.54"		10.40"	9.10"	10.40"			6.54"
2	5.08"		8.32"	5.81"	8.32"			5.08"
1	3.79"	9.74"	6.85"	4.34"	6.85"	9.74"	2.78"	3.79"

1– "X" DENOTES SCREW HOLES, LOCATION SPECIFIED ABOVE.
2– HOLES ARE NUMBERED FROM THE CENTER OUT.

SEE SHEET 1 FOR GENERAL NOTES
SEE SHEET 2 FOR FLAG NOTES

1-37

HNF-SD-SNF-DR-003, Rev. 2,
Appendix 1, MCO Drawings

DWG NO	TITLE	REF NUMBER	TITLE
DRAWING TRACEABILITY LIST		NEXT USED ON SHEET 1	REFERENCES

	REV NO	DESCRIPTION				
RS	2	General Revision per ECN 648629				
	1	General Revision per ECN 648626	7/16/96	7/16/96	7/16/96	7/16/96

REVISIONS

CADFILE B828075C CADCODE WIN95:ACD3:14.0:SS

TF KUYKENDALL
JD OSTERLOH
R BASTAR
C TEMUS (CE)
R BASTAR (PM)
J TANKE (QA)
PARSONS I & T, INC.

U.S. DEPARTMENT OF ENERGY
Richland Operations Office
Duke Engineering & Services Hanford, Inc.

MCO MARK IV SNF
SCRAP BASKET

F 212-H 3902 H-2-828075 2

SCALE SHOWN SHEET 3

2 PLOT SCALE: 1=1

CTITLE.DWG (10/96)

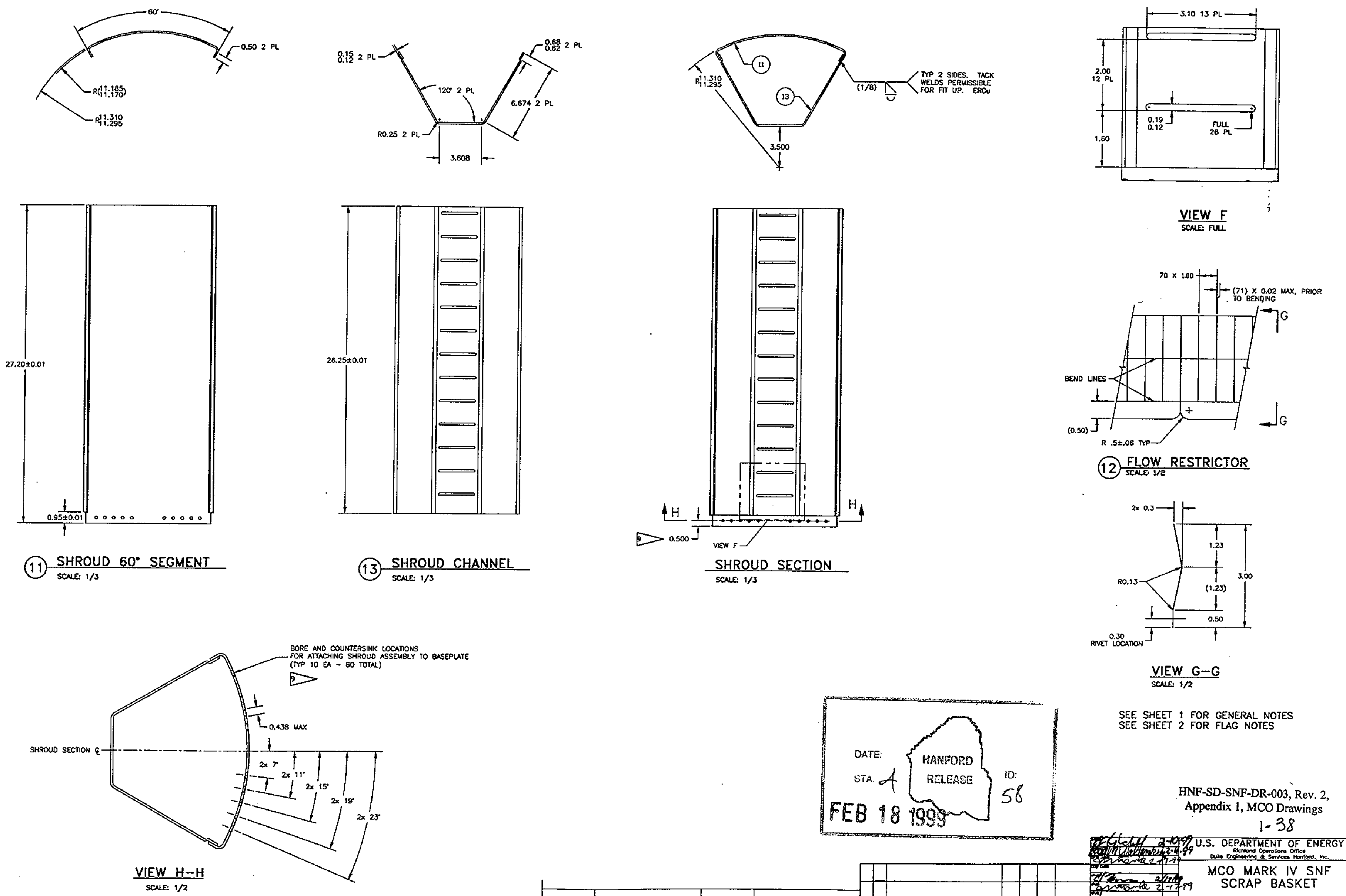

SEE SHEET 1 FOR GENERAL NOTES
SEE SHEET 2 FOR FLAG NOTES

DATE: FEB 18 1999
STA. 4
HANFORD RELEASE
ID: 58

HNF-SD-SNF-DR-003, Rev. 2,
Appendix 1, MCO Drawings
1-38

U.S. DEPARTMENT OF ENERGY
Richland Operations Office
Duke Engineering & Services Hanford, Inc.

MCO MARK IV SNF
SCRAP BASKET

2-10-99
2-4-99
2-17-99
2/17/99
2-17-99

F	212-H	3902	H-2-828075	0

PARSONS I & T, INC.
SCALE SHOWN
SHEET 4 OF

DWG NO	TITLE	REF NUMBER	TITLE
DRAWING TRACEABILITY LIST		NEXT USED ON	SHEET 1

REFERENCES
REVISIONS
CADFILE 88280750 CADCODE WIN95:AC03:14.0:SS
2 PLOT SCALE: 1=1
GTITLE.DWG (10/96)

MULTI-CANISTER OVERPACK DESIGN REPORT

MATERIAL EVALUATION

Prepared for DE&S Hanford, Inc.

Document No. HNF-SD-SNF-DR-003

Appendix 2, Rev. 2

February 1999

DOCUMENT REVISION	AFFECTED PAGES	REVISION DESCRIPTION	DATE OF REVISION	REVISION CHECKED BY	REVISION APPROVED BY
0	1-5	Initial Issue	May 1997	Charles Temus	R. Bastar
1	1-6	Revised to include addition of copper heat transfer for the scrap baskets, and addition of other austenitic steels	July 1998	Charles Temus	J. Tanke
2	All	Revised to include text provided by Buyer	February 1999	2/11/99	2-11-99

1. MATERIALS SELECTION AND CORROSION RESISTANCE

1.1 Materials Selection

Austenitic stainless steel will be used for the majority of the MCO components. Aluminum and copper alloys will be used for some MCO components.

1.1.1 Austenitic Stainless Steel

The primary reasons for selecting austenitic steel rather than ferritic steel are austenitic's increased corrosion resistance, as well as lower costs of material testing and fabrication, and the increased availability of material with suitable properties. Austenitic stainless steel is compatible with the 304L stainless steel MCO shell and fuel baskets. Other significant advantages of using austenitic stainless steel are the reduced maintenance required (especially during storage prior to handling) and fewer corrosion protection requirements for threaded and seal surfaces when compared with ferritic materials.

The disadvantage of austenitic stainless steel is reduced strength. The lower allowable strength of the material results in a lower margin beyond that inherent in the allowable stresses (ASME 1995). However, austenitic stainless steels are inherently tough and plastically deform, absorbing a great deal of energy before catastrophic failure. Also, all of the construction materials should be of the same basic type to preclude differential thermal expansion and challenges to the sealing system. Galling of bolted connections, which could result in excessively high torque values and/or insufficient preload, is not expected.

Designs of bolted connections in which austenitic materials are used typically include a minimum differential hardness. This may be achieved by varying the cold work that the parts are subjected to during fabrication or by specifying different materials that have inherently differing hardnesses. The locking ring is fabricated out of 304N, reducing the galling potential for both the set screws and the main buttress threads. The process valves, set screws and cover plate bolts are fabricated from Nitronic 60 (UNS S21800) stainless steel to provide harder surfaces that further minimize the potential for galling. Galling can also be prevented by using smoother surface textures, coarser threads, slower wrenching speeds, and, most importantly, good thread lubrication (Bickford 1990). There are few restrictions on the use of lubricants on any of the threaded fasteners used on the MCO because none of the fasteners are in the pool at any time. Also, all of the fasteners except the process port valves are outside the pressure boundary. The lubricants must still be functional and not offgas after being heated to a minimum of 132°C (270°F). With this in mind, high quality nuclear grade lubricants, such as Nickel Never Seize[1] or Fel-Pro[2] Nickel 5000 Never Seize, may be used on threaded surfaces. If some components are placed in the pool, lubricants such as NeoLube

---

[1] Never-Seize is a trademark of USM Corporation.

[2] Fel-Pro is a trademark of Fel-Pro Incorporated.

(graphite based) may be used. However, the surfaces in all cases should be relubricated after being removed from the water, if possible and desired.

1.1.2 Other Materials

Aluminum and copper are the only other major materials used other than the various grades of stainless steel in the MCO and fuel baskets. Aluminum-based alloys are used for the fuel rack insert and spacer on the fuel baskets to provide a positioning grid during the fuel loading. The major requirement is that the materials not interfere with the processing of the fuel and that it not lose sufficient strength such that it will block any of the gas flow passages in the baskets. A detailed evaluation of the initial cast alloy chosen, ASTM B26 356.0-T6, can be found in HNF-SD-SNF-ER-018, *Evaluation of Cast Carbon Steel and Aluminum for Rack Insert in MCO Mark IA Fuel Basket* (Graves 1997a). The current design calls for fabrication of the spacer from 5005H-34 plate and the rack insert from either 6061-T6 or A03560-T6 plate. The greater thermal expansion rate of aluminum (compared to stainless steel) is considered in the component tolerances. Upon expansion, the aluminum fuel rack insert would deform before any significant deformation of the basket shroud occurred. However, after the fuel is loaded, neither the basket shroud nor the fuel rack insert has any significant role in the safety or storage of the fuel.

A wrought copper alloy (C12200) is employed for the divider (shroud) subassembly in the Mark IA and Mark IV scrap baskets because it increases the amount of heat conduction from the fuel fines area, thus increasing safety margin during cold vacuum drying. Copper's thermal expansion coefficient is only about 5% to 10% larger than that of stainless steel, therefore uneven expansion at elevated temperatures is not a concern. The copper subassembly is not needed for criticality control. For more details on the selection of the copper alloy, see HNF-SD-SNF-ER-019, *Evaluation of Copper for Divider Subassembly in MCO Mark IA and Mark IV Scrap Fuel Baskets* (Graves 1997b).

Other metals that are used in smaller amounts are the soft metal coatings used on the Inconel and stainless steel seals (i.e., inert metals such as silver that will have no adverse reactions with the stainless steel during the life of the MCO).

1.2 Material Corrosion Resistance

This assessment of chemical and galvanic reactions between the MCO and its environments is divided into three subsections that correspond to the three stages or time periods of operation. The first stage occurs when the MCO is submerged in the K Basins or afterward when it still contains liquid water. The second stage covers the process of water removal and cold vacuum drying. The third stage, without liquid, extends through long-term interim storage.

Assessments of chemical reactions with the environments internal and external to the MCO are predicated on effective control of cleanness during fabrication, handling, and storage of MCO components before and during use. Standards such as ASTM A 380-96, *Cleaning, Descaling, and Passivation of Stainless Steel Parts, Equipment, and Systems* (ASTM 1996a), and ASME NQA-1, *Quality Assurance Requirements for Nuclear Facility Applications* (ASME 1994), are followed for cleanness control.

The MCO is fabricated using welded construction without post-welding heat treatment such that residual stresses in and adjacent to the welds may reach yield strength levels. In an aggressive environment, the MCO could be susceptible to stress corrosion cracking near the welds. The selection of a low carbon stainless steel was made to minimize the potential for stress corrosion cracking. Other conditions that also minimize the potential for stress corrosion cracking are discussed below.

1.2.1 Multi-Canister Overpack Containing Liquid Water

The MCO is immersed in or filled with liquid water for less than 2 days, which is too short for significant corrosion in benign environments.

A properly fabricated and cleaned 304L stainless steel MCO rapidly develops a passive corrosion protective oxide film in air. For submerged service, the film needs oxygen for damage repair. However, this protection is typically retained in natural waters, whether hot or cold, even those with relatively high pollution levels (Butler and Ison 1966). According to the MCO Performance Specification (Goldmann 1998a), the conductivity of water in the K Basins ranges from 1 μS/cm to 5 μS/cm, which is only slightly higher than that of good quality distilled water but significantly lower than that of excellent quality raw water (ASTM 1996b).

The protective oxide film ensures a low rate of corrosion that precludes any damage to the MCO for many years. Common sources of corrosion resistance information do not list typical values for this low uniform corrosion rate. WHC-SD-W236A-TRP-001, *Multi-Function Waste Tank Facility Corrosion Test Report (Phase 1)* (Carlos 1993), reports one example of a low corrosion rate in 304L stainless steel such that the predicted corrosion in 75 years would be 0.038 mm (1.5×10^{-3} in.). A design corrosion allowance is not required at this level of corrosion. The Nitronic 60 alloy, also an austenitic stainless steel, is expected to exhibit corrosion resistance similar to that of 304L stainless steel.

The MCO is susceptible to localized corrosion processes (e.g., pitting, crevice corrosion, or stress corrosion cracking) under certain water conditions. The most damaging condition for stainless steels is high concentration of the chloride ion. Chloride ion content in the K Basins is below the detection limit (Goldmann 1998b), which is 0.083 p/M by weight, and well below that needed for protection against attack in fully submerged service. The fluoride ion is typically of concern for localized corrosion. The fluoride ion content of K Basin water is 0.248 p/M (Goldmann 1998b). High-quality water typically used for mixing cleaning solutions, rinsing, and flushing of nuclear components would contain less than 1 p/M fluoride ion (ASME 1994). Therefore, the fluoride ion will not cause localized corrosion during the water-containing stage. High temperature water containing dissolved oxygen can cause stress corrosion cracking of sensitized stainless steel (Sedricks 1992); however the low water temperature precludes this stress corrosion cracking.

Low levels of polychlorinated biphenyls (PCBs) associated with fuel and sludge corrosion products have been identified in sludge samples from the K East Basin, and their detection raises a concern for thermal or radiolytic decomposition that might contaminate the water in the MCO with chlorine and thereby produce corrosion damage. The corrosion rate of 316 stainless steel in water saturated with chlorine at room temperature is 0.008 mm/yr (ASM 1987, p 1170-1174), a value that would be acceptable for the short duration of submerged service. A specific corrosion rate for 304L stainless steel is not available; however, it is not expected to be significantly different than that for 316 stainless steel. In addition, PCBs decompose slowly, levels are low, and they are not expected because the fuel is cleaned before it is loaded into the MCO.

Iodine is a fission product generated during the irradiation of N Reactor fuel; each MCO will contain about 180 g (0.4 lb.) of iodine (Praga 1998). The iodine in light-water-reactor oxide fuel combines with cesium as cesium iodide (Kohli 1982). This compound can vaporize in oxide fuel and migrate to the fuel-cladding gap by vapor transport along pellet-to-pellet interfaces; however, this behavior is unlikely in N Reactor SNF, which has no fuel pellets or fuel-cladding gap. Iodine (or CsI) could be released as the SNF corrodes. Assuming that the iodine would be distributed uniformly, that the cladding does not exist, that the total uranium surface of the original fuel is exposed to corrosion for 48 hours, and that the corrosion rate of uranium in water is 0.57×10^{-3} g/cm^2/h (ASM 1987, p 814) results in an upper bound estimate of 0.7 p/M maximum iodine content in the 500 L (130 gal) of water in the MCO. The corrosion literature does not identify iodine or the iodide ion as a major corrosion contributor for stainless steel; however, the low level determined for iodine would be acceptable even for the more corrosive chloride ion. Therefore, iodine contamination is not a corrosion concern.

Cesium is a fission product in N Reactor SNF, and each MCO will contain about 1.2 kg (2.6 lb.) of cesium (Praga 1998). Experience at the K Basins shows that cesium is the major source of radioactivity. Using the same corrosion rate, surface area, and time for uranium corrosion as applied above for iodine, an estimate of maximum cesium content in the MCO water after 48 hours of corrosion is about 4 p/M. There is no evidence in the literature or in K Basin operational experience that cesium is detrimental to the corrosion resistance of stainless steel.

Other fission products present in N Reactor SNF in very small quantities (Praga 1998) are dissolved in the water and do not enhance corrosion of stainless steel.

Aluminum is highly resistant to high-purity water (distilled or demineralized) at ambient temperatures, with any slight reaction initially occurring ceasing almost completely within a few days after development of a protective oxide film. After this protective film conditioning period, the amount of metal dissolved by the water becomes negligible (Hollingsworth and Hunsicker 1987). Measured corrosion rates in the K East Basin for either a 5086 or 6061 wrought aluminum are less than 0.5 μm/yr (0.02 mils/yr); similar corrosion rates are expected for the cast aluminum alloy.

Minerals in water combine with dissolved CO_2 and oxygen and react with copper to form a protective film. In distilled or very soft water, protective films are less likely to form; the corrosion rate may vary from less than 2.5 μm/yr to 125 μm/yr (0.1 mil/yr to 5 mil/yr) or more, depending on oxygen and CO_2 content (Polan 1987). Even at the higher corrosion rate, impact to the divider subassembly would be minimal because of the relatively short (far less than 1 year) exposure times.

Water is an electrolytic conductor, so the potential for galvanic corrosion has been examined for several dissimilar metal contact scenarios.

1. Contact between stainless steel and the aluminum fuel rack -- In many environments, including freshwater, aluminum can be used in contact with stainless steels with slight acceleration of corrosion. Stainless steels are easily polarized cathodically in mild environments, so the corrosion current is small (Hollingsworth and Hunsicker 1987). The ratio of stainless steel to aluminum is very large, yet even with an assumed thousand-fold corrosion rate increase, accelerated corrosion of the aluminum would only be 0.5 mm/yr (20 mil/yr).
2. Contact between stainless steel and the copper divider subassembly -- Both copper and stainless steel exhibit protective passive oxide layers on their surfaces with passive stainless steel more noble (corrosion-resistant) than copper in the sea water galvanic series.[3] This results in accelerated galvanic corrosion of the copper. A maximum of two scrap basket are loaded into each MCO, so the area ratio of stainless steel to copper is very large, increasing the copper corrosion rate.[4] The driving force for this galvanic corrosion will be appreciably reduced by the much lower conductivity of the K Basin water (versus sea water) and the relatively small spread between copper and stainless steel in the galvanic series.
3. Contact with Zircaloy-2 fuel cladding -- The zirconium-based cladding and the stainless steel alloys each exhibit passive oxide layers on their surfaces. Both exhibit similar galvanic corrosion potentials in seawater (ASM 1987, p 717-718) thus there should be no accelerated galvanic corrosion for this alloy combination. The cladding's passive oxide film is much more noble than either the aluminum or the copper oxide film. Therefore, any accelerated galvanic corrosion is expected to be of aluminum and copper.
4. Contact with aluminum single pass reactor (SPR) fuel cladding[5] -- Accelerated corrosion of the aluminum fuel cladding with stainless steel would be small (see item 1). The protective oxide coating on the aluminum is less noble than the copper oxide coating. In this case, accelerated corrosion of the aluminum cladding would occur.

---

[3] Copper can accelerate corrosion of active stainless steel, particularly in highly chlorinated water. However, as chloride levels of the K Basin water are very low and stainless steel is easily passivated, this scenario is not expected.

[4] Filling an MCO with more than one scrap basket would reduce the stainless steel-to-copper area ratio, thus reducing the magnitude of the copper corrosion rate increase.

[5] 8001 aluminum alloy which has the following chemical additions: 0.9-1.3% Ni, 0.45-0.7% Fe, 0.17% Si and 0.15% Cu (ASM 1990, p 1456).

5. Contact with uranium fuel -- The uranium is actively corroding with a nonprotective oxide layer resulting in no accelerated corrosion of either the stainless steel or copper. A previous galvanic couple test (Weirick 1987) of uranium with aluminum in 100% relative humidity showed only a slight corrosive attack for both the aluminum and the uranium.
6. Contact between stainless steel and silver -- Silver is only slightly more cathodic than stainless steel, thus galvanic attack of the steel will be negligible.

Even with accelerated galvanic corrosion, the short duration of MCO immersion in water is insufficient for significant corrosion of the construction materials.

1.2.2 Multi-Canister Overpack during Removal of Liquid Water

Less than 48 hours is needed to remove water from the MCO and establish a low internal water vapor pressure (Goldmann 1998b). This period is too short for significant corrosion of either stainless steel, aluminum, or copper in the benign environment.

The vacuum drying operation includes monitoring of pressure increases near the end of the process to ensure that acceptable water vapor partial pressure has been established. The water vapor pressure (<0.5 torr) prevents condensation inside the MCO. The single wet/dry cycle precludes significant buildup of chloride ions to levels that would cause localized corrosion. Once the liquid water is removed and condensation is precluded, liquid (galvanic) corrosion processes cease.

If liquid water is trapped in locations such as cracks or crevices in the fuel elements, a complex flow path might produce slow evaporation kinetics that could allow water to remain after drying and sealing of the MCO. This liquid would slowly evaporate into the gas space during the storage period. If enough water vapor were produced to exceed the saturation pressure, condensation on the slightly cooler wall of the MCO could occur. The question then becomes whether this condensate could dissolve sufficient chloride ion from the previously dried walls to exceed the threshold for pitting or crevice corrosion of 304L stainless steel. Evaporation of the low-chloride K Basin water should not create a chloride concentration problem that would enhance pitting or stress corrosion cracking under dry or fully immersed conditions. However, the situation with a relatively small amount of condensate is unclear (Blackburn 1995). Long-term test programs did not reveal significant pitting of 304L in 15-year exposures in a marine environment with much higher chloride concentrations (Davison et al. 1987, Southwell et al. 1976). Bare uranium inside the MCOs will eventually consume the water-produced H_2.

Water also is removed from the annulus between the shipping cask and the MCO. Any moisture remaining in the annulus will not produce corrosion damage on the exterior of the MCO during the short time required for shipment to the CSB and removal from the shipping cask.

1.2.3 Multi-Canister Overpack after Removal of Liquid Water

Following cold vacuum drying, four gases may exist within the MCO in addition to inert gases:

- Hydrogen gas generated by reactions of the uranium fuel with water vapor or radiolysis of chemically bound water.
- Chlorine gas produced by thermal or radiolytic decomposition of PCBs, detected in low levels in K Basin sludge samples.
- Iodine gas that could be present because of the thermal environment and fuel corrosion.
- Oxygen gas generated by the radiolysis of water.

Hydrogen will not reduce the chromium oxide passive layer on the stainless steel although it may reduce the iron oxide that may co-exist in mixed oxide layers (Adams 1983). Effects of gaseous hydrogen on the mechanical properties of 304L stainless steel are discussed in detail in the next section. Aluminum is considered to be resistant to hydrogen at temperatures approaching aluminum's melting point of 660°C (1,220°F) (Berry 1971). Dry hydrogen gas is not detrimental to aluminum alloys; however, with the addition of water vapor, subcritical crack growth increases dramatically. It is more common to form a multitude of near-surface voids that coalesce to produce a large blister (Craig 1987). A common form of hydrogen damage in copper is known as steam embrittlement and is observed only when copper contains oxygen. Deoxidized coppers with high residual deoxidizer contents (such as the C12200 used in the scrap baskets) are not considered susceptible to hydrogen embrittlement because the oxygen is tied up in complex oxides that do not react appreciably with hydrogen (Polan 1987).

Dry chlorine is compatible with stainless steels at normal pressures, but chlorine gas saturated with water vapor at ambient temperature is extremely corrosive to these alloys (Brown et al. 1947). In chlorine gas, aluminum is usable up to 120°C (250°F), and moisture at room temperature increases attack. A maximum-use temperature of 205°C (400°F) is suggested for copper in dry chlorine (Liening 1987); water vapor at room temperature accelerates attack of copper. However, PCBs in the K Basin canister sludge are identified at low levels, so they should not be present within the MCO at any measurable level. This, coupled with cleaning of the fuel before MCO loading and gas purging before storage, further reduces the possibility of chlorine gas corrosion problems.

If the total 180 g (0.4 lb.) of iodine contained in the fuel in an MCO (Praga 1998) were released, the iodine partial pressure would be 26 torr at atmospheric temperature. In actuality, only a small fraction of the iodine would be expected to be released. Assuming the iodine partial pressure to be about the same as that for chlorine, the fact that iodine is less aggressive means that corrosion damage of the stainless steel, aluminum, or copper is very unlikely.

The passive film on 304L stainless steel that protects against liquid corrosion also protects against gaseous oxidation by impurities (e.g., oxygen or water vapor) in the inert gas environment established in the MCO (Adams 1983). Oxidation of stainless steel only becomes obvious at temperatures above about 400°C (750°F) (ASM 1987, pages 351-353). Oxygen gas has no effect on aluminum as it aids in the formation of a protective oxide coating (Chawla and Gupta 1993). When copper is used at high temperatures in oxygen, scaling results. Below 100°C (212°F), the oxide film increases in thickness logarithmically with time (Polan 1987). At medium temperatures, the scaling rate increases following the parabolic law.

With the liquid removed from the MCO, galvanic corrosion is no longer possible. However, direct contact between the fuel and baskets could lead to liquid metal embrittlement of the stainless steel, aluminum, or copper alloys by fission products or actinides (such as plutonium). Cesium and tin are the low melting point (<205°C [<400°F]) fission products generated in the greatest amounts. However, the tin and cesium levels in the fuel elements are small, so the content in a contact area would be far too small for significant damage to occur to either the stainless steel, aluminum, or copper alloys. Solid metal embrittlement has been observed only in those metal couples in which liquid metal embrittlement occurs (ASM 1987, page 185). A literature search did not reveal any data on solid metal embrittlement of stainless steel by cesium, tin, or any of the actinide metals.

If eutectic liquid could form because localized fuel reactions produced small regions of very high temperature, attack on stainless steel could be severe. Estimates of the lowest temperatures required for liquid eutectic formations obtained from binary-phase diagrams are 646°C (1,195°F) for aluminum-uranium and 725°C (1,336°F) for iron-uranium. Additionally, the melting point of aluminum is 660°C (1,220°F) (ASM 1973). Other eutectics for the binary systems of interest among uranium, zirconium, and copper are higher in temperature. Calculations for temperatures within the MCO during interim storage have resulted in a maximum value of 153°C (307°F) (Reilly 1998).

The environment at the exterior of the MCO will contain both water vapor and oxygen (either as air or as an impurity in inert gas). The passive oxide layer on the stainless steel will prevent significant reaction with these gases. Internal heat generation in the MCO acts to prevent moisture condensation on the exterior of the MCO. Engineered and administrative features protect against accidental intrusion of water into the storage tubes at the CSB including:

- A dry roof that does not collect water.
- Absence of sprinklers for fire protection.
- Prohibition against washing the deck.
- Seals on the CSB storage tube plugs.

1.3 Hydrogen Effects on the Mechanical Properties of Stainless Steel

Hydrogen gas is a principal contributor to the internal pressure in the MCO. The allowable gas amounts defined in HNF-SD-SNF-OCD-001, *Spent Nuclear Fuel Conditioning Product Criteria* (Pajunen 1998), show that the total water and hydrogen puts an upper limit on the hydrogen pressure of 2.14 MPa (310 psi) absolute at a temperature of 154 °C (309 °F). An extensive compilation of the effects of hydrogen on the mechanical properties of 304L stainless steel is provided in DP-1643, *Hydrogen Compatibility Handbook for Stainless Steels* (Caskey 1983). Much of the experimental information was obtained for a pressure of 10,000 psi, either as an external hydrogen environment during the test or as a pressure for charging hydrogen internally into the steel at elevated temperatures. Only in the case of tensile ductility are sufficient data available at lower pressures to determine effects at the MCO pressure.

Following Sievert's Law, the concentration of hydrogen just inside the alloy surface is directly proportional to the square root of the hydrogen pressure (Caskey 1985, p 830). The MCO pressures will be much less than those employed in Caskey's tests (1983), hence, so will the hydrogen concentrations. The extent of hydrogen diffusion into the steel for two MCO CSB conditions and two Caskey hydrogen charging conditions was calculated by combining Fick's second law and the diffusivity temperature-dependant Arrhenius equation (ASM 1985, p 28-65 and 28-66) to yield:

$$x \cong \{D_0 \, t \, [\exp(-Q/RT)]\}^{1/2}$$

where:

x = hydrogen diffusion distance (cm)
D_0 = diffusivity constant, 2×10^{-3} cm^2/sec for 304L (Caskey 1985, p 828)
t = time (sec)
Q = activation energy, 50 kJ/mol for 304L (Caskey 1985, p 828)
R = universal gas constant (8.314 J/mole°K)
T = temperature (degrees Kelvin [K = °C + 273]).

The Caskey conditions calculated were: a) 197°C (387°F) for 1,449 days (Caskey 1983, p 81) and b) 347°C (657°F) for 3 weeks (Caskey 1983, p 83). For both of these conditions, the diffusion distance was equal to or greater than the original diameter of the tensile specimen; thus full penetration of the hydrogen was achieved. The MCO conditions calculated were: a) 132°C (270°F), the maximum MCO shell temperature in CSB, for 40 years and b) 46°C (115°F), the maximum air temperature within CSB storage tubes, for 50 years. The calculated diffusion distances for the MCO conditions were 9.47 mm and 1.42 mm (0.373 in. and 0.056 in.), respectively. These distances correspond to 75% and 11% of the MCO shell wall thickness, thus limiting the hydrogen to the inner surface of the MCO. Consequently, experimental results from Caskey's hydrogen effect tests (Caskey 1983) conservatively bound effects for the MCO. Based upon these calculations, thinner components, less than 8.9 mm (0.35 in.) thick, within the MCO (i.e., the rupture disk) will achieve full hydrogen penetration. The hydrogen concentration was conservatively based on no consumption or acquisition of the H2 gas by the uranium metal.

The following summary of information from DP-1643 (Caskey 1983) contains parenthetical reference to specific figures or pages of that document.

- *Ductility*: The most commonly used index of hydrogen damage in stainless steels has been the change in reduction-of-area as measured for a fractured tensile specimen. The reduction-of-area is a measure of plasticity calculated from the original cross-sectional area (A_o) and the final cross-sectional area at the fracture (A_f).

  $$RA = 100\ (A_o - A_f)/A_o$$

  Another measure of ductility that is used extensively in DP-1643 (Caskey 1983) is plastic strain to failure (E_f).

  $$E_f = \ln\ (A_o/A_f)$$

  High hydrogen pressure can reduce reduction-of-area from a starting value of about 80% to a value of about 22% at a temperature of about –53°C (-63°F), which corresponds to a minimum in reduction-of-area (these values were calculated by converting Caskey's E_f values [Caskey 1983] to reduction-of-area values using the previous equations). However, for a hydrogen pressure of about 3100 kPa (450 psi), the reduction-of-area would only be reduced to about 61% at about 22°C (72°F). This level of reduction-of-area is typically more than adequate to ensure ductile structural behavior in engineering components. At a service temperature of 200°C (392°F), the reduction-of-area value would be even higher than 61% (Caskey 1983, Figures 12 and 13, pages 81, 83, 86).

- *Yield Strength*: High-pressure hydrogen produces small increases of about 0% to 28% in the yield strength of 304L stainless steel (Caskey 1983, pages 24, 31, 81, 82, 83).

- *Tensile Strength*: High-pressure hydrogen typically produces small decreases of about 10% to 15% in the tensile strength (Caskey 1983, pages 31, 81, 82). These small reductions do not influence design allowable stress intensity because this parameter is governed by yield strength for conditions applicable to MCO storage.

- *Notch Strength*: Stainless steels like 304L in conventional tensile tests are typically strengthened by notches in the absence of hydrogen (the opposite behavior indicates susceptibility to brittle fracture at stress concentrations). High-pressure hydrogen produces a reduction of less than 20% in the notch strength (Caskey 1983, pages 47, 88, 89).

- *Elastic/Plastic Fracture Toughness*: High-pressure hydrogen produces reduction in the J-integral at maximum load of about 30% and in the tearing modulus of about 20% (Caskey 1983, pages 84, 85). These changes are much too small to be of practical engineering significance for the MCO.

- *Static Crack Growth*: Slow crack growth under static loads did not occur in fracture mechanics tests of thin specimens of 304L stainless steel. Crack growth did occur in notched specimens loaded to 85% of the notch tensile strength (Caskey 1983, pages 50, 51, 52). As the MCO design does not allow loads to reach this critical level, static crack growth is of no concern.

- *Impact Energy*: Impact tests of a dynamic tear test specimen showed only a small decrease in absorbed energy for tests in hydrogen at room temperature. Even at -196°C (-321°F), absorbed energy values did not indicate brittle fracture (Caskey 1983, pages 81, 83).

- *Stress State*: Burst testing of disks produces a biaxial stress state in the test specimen. Tests using hydrogen as the pressurizing gas show little change in burst pressure relative to helium tests for solution-annealed 304 stainless steel, but a reduction of about 45% in burst pressure for samples that were sensitized or welded (Caskey 1983, page 46; Fidelle 1974).

With the exception of yield and tensile strength, the material properties discussed above are not design parameters. The strength values used during the critical analyses are conservative values as required by the applicable codes and take into account slight property variations. The hydrogen effects on those material properties not used in the design calculations (i.e., notch toughness) show no significant loss in strength, ductility, or resistance to crack propagation that would adversely affect the design, analysis, or structural performance of the MCO.

2. REFERENCES

1. Adams, R. O., 1983, "A Review of Stainless Steel Surfaces," *Journal of Vacuum Science and Technology A*, Vol. 1, p 12-18.

2. ASM, 1990, *Woldman's Engineering Alloys*, 7th Edition, J. P. Frick Editor, American Society for Metals, Metals Park, Ohio.

3. ASM, 1987, *Corrosion*, Metals Handbook, 9th Edition, Volume 13, American Society for Metals, Metals Park, Ohio.

4. ASM, 1985, *Metals Handbook*, Desk Edition, H. E. Boyer and T. L. Gall, Editors, American Society for Metals, Metals Park, Ohio.

5. ASM, 1973, *Metallography, Structures, and Phase Diagrams*, Metals Handbook, 8th Edition, Vol. 13, American Society for Metals, Metals Park, Ohio.

6. ASME, 1995a, *Boiler and Pressure Vessel Code*, American Society of Mechanical Engineers, New York, New York.

7. ASME, 1994, *Quality Assurance Requirements for Nuclear Facility Applications*, ASME NQA-1, Part II, Subpart 2.1, American Society of Mechanical Engineers, New York, New York.

8. ASTM, 1996a, "Standard Practice for Cleaning and Descaling Stainless Steel Parts, Equipment, and Systems," A 380-94, *1996 Annual Book of ASTM Standards*, Volume 01.03, American Society for Testing and Materials, Philadelphia, Pennsylvania.

9. ASTM, 1996b, "Standard Test Methods of Corrosivity of Water in the Absence of Heat Transfer (Electrical Methods)," D 2776, *1996 Annual Book of ASTM Standards*, Volume 11.01, American Society for Testing and Materials, Philadelphia, Pennsylvania.

10. Berry, W. E., 1971, *Corrosion in Nuclear Applications*, John Wiley and Sons, Inc., New York, New York, p 411.

11. Bickford, J. H., 1990, *An Introduction to the Design and Behavior of Bolted Joints*, 2nd Edition, Marcel Dekker, Incorporated, New York, New York.

12. Blackburn, L. D., 1995, *Material Selection for Multi-Canister Overpacks (MCOs)* (memorandum, 57E00-93-003 to L. H. Goldmann, December 13), ICF Kaiser Hanford Company, Richland, Washington.

13. Brown, M. H., W. B. DeLong, and J. R. Auld, 1947, "Corrosion by Chlorine and by Hydrogen Chloride at High Temperatures," *Industrial and Engineering Chemistry*, Vol. 39, p 839-844.

14. Butler, G., and H. C. K. Ison, 1966, *Corrosion and its Prevention in Waters*, Reinhold Publishing Corporation, New York, New York.

15. Carlos, W. C., 1993, *Multi-Function Waste Tank Facility Corrosion Test Report (Phase 1)*, WHC-SD-W236A-TRP-001, Rev. 0, Westinghouse Hanford Company, Richland, Washington.

16. Caskey, G. R., 1985, "Hydrogen Effects in Stainless Steels," *Hydrogen Degradation of Ferrous Alloys*, R. A. Oriani Editor, Noyes Publications, Park Ridge, New Jersey.

17. Caskey, G. R., 1983, *Hydrogen Compatibility Handbook for Stainless Steels*, DP-1643, E. I. du Pont de Nemours & Company, Savannah River Laboratory, Aiken, South Carolina.

18. Chawla, S. L. and R. K. Gupta, 1993, *Materials Selection for Corrosion Control*, American Society for Metals, Materials Park, Ohio, p 190.

19. Craig, B., 1987, "Hydrogen Damage" in *Metals Handbook, Volume 13: Corrosion*, 9th Edition, American Society for Metals, Metals Park, Ohio, p 163-171.

20. Davison, R. M., T. DeBold, and M. J. Johnson, 1987, "Corrosion of Stainless Steels," *Metals Handbook*, 9th Edition, Volume 13, American Society for Metals, Metals Park, Ohio.

21. Goldman, L. H., 1998a, *Performance Specification for the Spent Nuclear Fuel Multi-Canister Overpack*, WHC-S-0426, Rev. 5, Westinghouse Hanford Company, Richland, Washington.

22. Goldmann, L. H., 1996b, *Spent Nuclear Fuel Multi-Canister Overpack Technical Functions and Requirements*, WHC-SD-SNF-FRD-016, Rev. 0, Westinghouse Hanford Company, Richland, Washington.

23. Graves, C. E., 1997a, *Evaluation of Cast Carbon Steel and Aluminum for Rack Insert in MCO Mark 1A Fuel Basket*, HNF-SD-SNF-ER-018, Revision 0, Duke Engineering & Services Hanford, Richland, Washington.

24. Graves, C. E., 1997b, *Evaluation of Copper for Divider Subassembly in MCO Mark 1A and Mark IV Scrap Fuel Baskets*, HNF-SD-SNF-ER-019, Revision 0, Duke Engineering & Services Hanford, Richland, Washington.

25. Hollingsworth, E. H., and H. Y. Hunsicker, 1987, "Corrosion of Aluminum and Aluminum Alloys" in *Metals Handbook, Volume 13: Corrosion*, 9th Edition, American Society for Metals, Metals Park, Ohio, p 583-609.

26. Kohli, R., 1982, "A Thermodynamic Assessment of the Behavior of Cesium and Rubidium in Reactor Fuel Elements," *Material Behavior and Physical Chemistry in Liquid Metal Systems*, H. U. Borgstedt, Editor, Plenum Press, New York, New York, p 345-350.

27. Liening, E. L., 1987, "Corrosion by Chlorine" in *Metals Handbook, Volume 13: Corrosion*, Ninth Edition, American Society for Metals, Metals Park, Ohio, p 1170-1174.

28. Pajunen, A.J.,1998, *Spent Nuclear Fuel Conditioning Product Criteria*, HNF-SD-SNF-OCD-001, Rev. 3, COGEMA Engineering Corporation, Richland, Washington.

29. Polan, N. W., 1987, "Corrosion of Copper and Copper Alloys" in *Metals Handbook, Volume 13: Corrosion*, 9th Edition, American Society for Metals, Metals Park, Ohio, p 610-640.

30. Praga, A. N., 1998, HNF-SD-SNF-TI-009, *105-K Basin Material Design Basis Feed Description for Spent Nuclear Fuel Project Facilities*, Volume 1:Fuel, Rev. 2, Duke Engineering & Services Hanford, Richland, Washington.

31. Reilly, M. A., 1998, *Spent Nuclear Fuel Project Technical Databook*, HNF-SD-SNF-TI-015, Rev. 6, Fluor Daniel Hanford, Richland, Washington.

32. Sedricks, A. J., 1992, "Stress-Corrosion Cracking of Stainless Steels," *Stress Corrosion Cracking*, R. H. Jones, Editor, ASM International, Metals Park, Ohio, p 118-119.

33. Southwell, C. R., J. D. Bultman, and A. L. Alexander, 1976, "Corrosion of Metals in Tropical Environments—Final Report of 16-Year Exposures," *Materials Performance*, Volume 15, Number 7, p 9-25.

34. Weirick, L. J., 1987, "Corrosion of Uranium and Uranium Alloys" in *Metals Handbook, Volume 13: Corrosion*, 9th Edition, American Society for Metals, Metals Park, Ohio, p 813-822.

PARSONS	**CALCULATION PACKAGE**	**FILE NO:** **DOC NO:** **PAGE**	KH-8009-8-01 HNF-SD-SNF-DR-003, Rev. 2 , Appendix 3 1of 28

PROJECT NAME: MCO Design	**CLIENT:** DE&S Hanford, Inc.

CALCULATION TITLE:

Weight Summary

PROBLEM STATEMENT OR OBJECTIVE OF CALCULATION:

Calculate the nominal and maximum weight of the Multi-Canister Overpack.

DOCUMENT REVISION	AFFECTED PAGES	REVISION DESCRIPTION	PREPARED BY INITIALS/DATE	CHECKED BY INITIALS/DATE	APPROVED BY INITIALS/DATE
0	1-27	Initial Issue	Diane Simpson 4/8/97	Marty Pitts 4/17/97	Charles Temus 4/18/97
1	4, 8-14, 22, 24, and 26	Redesign of the scrap baskets & revise weights	Marty Pitts 7/14/98	Zachary Sargent 7/14/98	Charles Temus 7/14/98
2	1, 4 - 6, and 23 – 26, added 27	Redesign of MCO Baskets, added SPR fuel basket table and clarified Table 1	mp 2/9/99	2/9/99	2/9/99

TABLE OF CONTENTS

List of Tables

1. INTRODUCTION

This calculation package provides the calculated weights of fully assembled and loaded MCO's (with and without water), and the calculated weight of individual MCO components.

2. REFERENCES

1. DE&S, *Performance Specification for the Spent Nuclear Fuel Multi-Canister Overpack*, HNF-S-0426, Rev. 5, December 1998 Duke Engineering and Services Hanford, Richland, Washington.

2. Oberg, E., Jones, F. D., Horton, H. L., and Ryffel, H.H., 1996, Machinery's Handbook, 25th Edition, Industrial Press, Inc., New York, New York.

3. Spent Nuclear Fuels, *Spent Nuclear Fuel Project Technical Databook*, WHC-SD-SNF-TI-015, Rev. 0, Westinghouse Hanford Company, Richland, Washington.

4. Department of Defense, United States of America, MIL-HDK-5G, 1 November 1994, Military Handbook, Metallic Materials and Elements for Aerospace Vehicle Structures Volume 1 of 2 Volumes.

5. Beer, F. P., Johnston, E. R. Jr., 1984, Vector Mechanics for Engineers Statics and Dynamics, Fourth Edition, McGraw-Hill Book Company, New York, New York.

6. MCO Drawing Package.

7. Alaskan Copper & Brass Company, Mill Products Stock List.

3. TECHNICAL APPROACH

The weight for the Multi-Canister Overpack (MCO) was determined by multiplying the volume of a component by the density of Stainless Steel (0.286 lb/in^3, Reference 3), or the density of copper (0.322 lb/in^3, Reference 7) for the applicable scrap basket components. Table 1 represents a summary of the weight calculation for the MCO under different load conditions. Table 2 represents the weight of a fully loaded MCO, dry, with the canister cover. Attached as an Appendix are weight tables for each individual MCO Component.

Table 1 - MCO Weight Summary

Item	Condition	Nominal Weight (lbs.)	Maximum Weight (lbs)
MK1A Storage Basket	Empty	471.95	471.95
MK1A Scrap Basket	Empty	624.61	624.61
MK1A Storage Basket	Loaded 48 Fuel Assemblies	2378.03	2378.03
MKIV Storage Basket	Empty	227.82	227.82
MKIV Scrap Basket	Empty	432.11	432.11
MKIV Storage Basket	Loaded 54 Fuel Assemblies	3218.34	3218.34
MCO Condition 1	Empty, Shell, Collar, Bottom Plate, Support Plates, Guide Cone, Dry.	1931.40	1989.41
MCO	MCO Condition 1, filled with water and with six loaded MK1A Storage Baskets.	17235.01	17293.02
MCO	MCO Condition 1, filled with water and with five loaded MKIV Storage Baskets.	19064.13	19122.14
MCO Condition 2	Empty, Shield Plug, Locking Ring with Screws, Shell, Collar, Guide Cone, Bottom Plate, Support Plates, Stabilizer Extension, Internal Filter, Process Valves, Guard Ring, Guard Plate and Dip Tube, Dry.	3468.79	3598.55
MCO	MCO Condition 2, Dry and with six loaded MK1A Storage Baskets.	17736.97	17866.73
MCO	MCO Condition 2, Dry and with five loaded MKIV Storage Baskets.	19560.49	19690.25
MCO Condition 3	Empty, Shell, Collar, Bottom Plate, Support Plates, Guide Cone, Shield Plug, Internal Filter, Dip Tube, Stabilizer Extension , Guard Plate, Guard Ring, Dry.	3038.64	3152.84
MCO	MCO Condition 3, filled with water and with six loaded MK1A Storage Baskets.	18154.10	18263.32
MCO	MCO Condition 3, filled with water and with five loaded MKIV Storage Baskets.	19983.85	20092.45

Table 2 - MCO Assembled with Canister Cover

Item	Condition	Nominal Weight (lbs.)	Maximum Weight (lbs)
Canister Cover	N/A	509.31	520.83
MCO	MCO condition 2, Dry, with six loaded MK1A Storage Baskets & Canister Cover.	18246.28	18387.56
MCO	MCO Condition 2, Dry, with five loaded MKIV Storage Baskets & Canister Cover.	20069.80	20211.08

Notes:

- The Single Pass Reactor (SPR) Fuel basket is a modified version of the Mark 1A fuel basket. A non-structural loading jig replaces the aluminum fuel rack. The fuel elements are stacked 2 to 3 high in each loading position. At the time of this printing (Revision 2) the true weights of the SPR fuel baskets have not been determined. However, the combined weight of the jig and the SPR fuel in the Mark 1A fuel basket is less than the weight of the Mark 1A fuel.
- Revision 2 of this document modifies certain parts of the storage and scrap baskets. Some parts designs were replaced with others, and in most cases the weights do not change. The weights obtained for the fuel baskets in Table 1 were calculated based on nominal dimensions.
- In Table 1, it is assumed that the density of water is 62.3 lb/ft^3 (Mark's Handbook, 9th Edition, page 6-10) at 70°F.
- The shield plug assembly consists of the shield plug, the process valves, the guard plate, the guard plate ring, the stabilizer extension, the dip tube and the internal filter. The nominal weight of the shield plug assembly is 1107.24 lb. and the maximum weight is 1163.43 lb.

Appendix

MCO Components Weight Summaries

Mechanical Closure Detail - Canister Collar											
	O.D. nom. (in.)	O.D. max. (in.)	I.D. nom. (in.)	I.D. min. (in.)	Height nom. (in.)	Height max. (in.)	Volume nom. (in^3)	Volume max. (in^3)	Density, 304L (lb/in^3)	Weight nom. (lbs.)	Weight max. (lbs.)
Top 1.15"	25.310	25.310	24.567	24.567	1.150	1.18	33.472	34.345	0.286	9.57	9.82
Threaded Area	25.310	25.310	24.567	24.567	2.770	2.800	80.623	81.496	0.286	23.06	23.31
.375" Groove	25.310	25.310	24.567	24.567	0.375	0.390	10.915	11.351	0.286	3.12	3.25
Flat after Groove	25.310	25.310	24.040	24.035	1.810	1.840	89.096	90.920	0.286	25.48	26.00
2" Fine Surface	25.310	25.310	22.985	22.980	2.000	2.060	176.378	182.041	0.286	50.44	52.06
Edge to Angle	25.310	25.310	22.99	22.96	0.69	0.72	60.728	64.146	0.286	17.37	18.35
45deg. Angle	25.310	25.310	24.060	24.040	0.625	0.640	15.147	15.752	0.286	4.33	4.51
Angle to End	24.060	24.080	22.990	22.960	6.375	6.390	252.066	264.409	0.286	72.09	75.62
	O.D. nom. (in.)	O.D. min. (in.)	I.D. nom. (in.)	I.D. max. (in.)	Height nom. (in.)	Height min. (in.)	Volume nom. (in^3)	Volume min. (in^3)			
Top bevel	25.310	25.280	24.567	24.567	0.100	0.088	1.455	1.228	0.286	-0.42	-0.35
Threads	24.5670	24.567	24.040	24.070	2.770	2.800	27.864	26.579	0.286	-7.97	-7.60
									Total Weight	197.08	204.96
	O.D. nom. (in.)	O.D. max. (in.)	I.D. nom. (in.)	I.D. min. (in.)	Height nom. (in.)	Height max. (in.)	Volume nom. (in^3)	Volume max. (in^3)			
Bottom Weld	24.045	24.06	23.075	23.03	0.280	0.309	5.026	5.886	0.286	1.44	1.68
										198.52	206.65
Revision			0		1		2				
Prepared by/Date		DS	4/16/97	MP	7/14/98	MP	2/9/99				
Checked by/Date		MP	4/16/97	ZGS	7/14/98	ZGS	2/9/99				

Locking and Lifting Ring												
	# of Bolt Holes	O.D. Nominal (in.)	O.D. max. (in.)	I.D. nom. (in.)	I.D. min (in.)	Height nom. (in.)	Height max. (in.)	Volume nom. (in^3)	Volume max (in^3)	Density, 304L (lb/in^3	Weight nom. (lbs.)	Weight max. (lbs)
Lip		20.380	20.410			1.000	1.000	326.211	327.172	0.286	93.30	93.57
Mid Section		18.750	18.780			1.130	1.170	312.012	324.091	0.286	89.24	92.69
Mid Section Bevel		19.250	19.280	18.750	18.720	0.570	0.600	4.253	5.014	0.286	1.22	1.43
Bottom		24.127	24.142			4.370	4.400	1997.919	2014.137	0.286	571.40	576.04
Take-outs (all at minimums for max. weight)												
		O.D. Nominal (in.)	O.D. min. (in.)	I.D. nom. (in.)	I.D. max (in.)	Height nom. (in.)	Height min. (in.)	Volume nom. (in^3)	Volume min. (in^3)			
Top bevel		24.000	23.970	23.560	23.650	0.380	0.350	3.123	2.094	0.286	-0.89	-0.60
Center Hole		15.905	15.900			6.000	5.970	1192.088	1185.382	0.286	-340.94	-339.02
Center bevel- bottom		16.485	16.480	15.905	15.910	0.500	0.470	3.689	3.408	0.286	-1.05	-0.97
Bottom Bevel		24.440	24.350	24.000	24.030	0.500	0.470	4.185	2.857	0.286	-1.20	-0.82
Bolt Holes	18	1.396	1.384			4.370	4.340	6.689	6.643	0.286	-34.43	-34.20
Threads		24.440	24.350	24.000	24.030	3.370	3.340	28.206	20.306	0.286	-8.07	-5.81
										Total Weight	368.57	382.32
	# of Set Screws	O.D. Nominal (in.)	O.D. max. (in.)	I.D. nom. (in.)	I.D. min (in.)	Height nom. (in.)	Height max. (in.)	Volume nom. (in^3)	Volume max (in^3)	Density, 304L (lb/in^3	Weight nom. (lbs.)	Weight max. (lbs)
Set Screw	18	1.500				3.750	3.780	6.627	6.680	0.286	34.11	34.39
										Weight w/screws	402.68	416.71
Revision		0		1		2						
Prepared by/Date	DS	4/16/97	MP	7/14/98		2/9/99						
Checked by/Date	MP	4/16/97	ZGS	7/14/98		2/9/99						

Canister Cover											
	O.D. nom. (in.)	**O.D. max. (in.)**	**I.D. nom. (in.)**	**I.D. min. (in.)**	**Height nom. (in.)**	**Height max. (in.)**	**Volume nom. (in^3)**	**Volume max. (in^3)**	**Density, 304L (lb/in^3)**	**Weight nom. (lbs.)**	**Weight max. (lbs.)**
Lip	20.380	20.410			1.000	1.000	326.211	327.172	0.286	93.30	93.57
Center Top Section	18.750	18.780			1.130	1.145	312.012	317.166	0.286	89.24	90.71
Center Angle	19.250	19.265	18.750	18.735	0.570	0.600	4.253	4.745	0.286	1.22	1.36
Bottom	25.310	25.310			6.870	6.870	3456.455	3456.455	0.286	988.55	988.55
Take-outs											
	Radius nom. (in.)	**Radius min. (in.)**	**Rrev nom. (in.)**	**Rrev min. (in.)**	**Area nom. ($in.^2$)**	**Area min. ($in.^2$)**	**Volume nom. (in^3)**	**Volume min. (in^3)**			
"1/4 Toroid" where $V=2\pi(Rrev)(Area)$	2.780	2.7500	10.0800	10.0500	6.0699	5.9396	384.4323	375.0604	0.286	-109.95	-107.27
Hole	**O.D. nom. (in.)**	**O.D. min. (in.)**	**I.D. nom. (in.)**	**I.D. max. (in.)**	**Height nom. (in.)**	**Height min. (in.)**	**Volume nom. (in^3)**	**Volume min. (in^3)**			
Top Middle	2.270	2.2600			0.2700	0.2600	1.093	1.043	0.286	-0.31	-0.30
Mid Section	1.875	1.8125			1.2300	1.2200	3.396	3.148	0.286	-0.97	-0.90
"Thread" Area	0.484	0.4720			1.0000	0.9400	0.184	0.164	0.286	-0.05	-0.05
Bottom Tube	0.295	0.2800			1.0400	1.0100	0.071	0.062	0.286	-0.02	-0.02
	O.D. nom. (in.)	**O.D. min. (in.)**	**I.D. nom. (in.)**	**I.D. max. (in.)**	**Height nom. (in.)**	**Height min. (in.)**	**Volume nom. (in^3)**	**Volume min. (in^3)**			
Upper Center Section	17.792	17.777			2.780	2.750	691.169	682.558	0.286	-197.67	-195.21
Lower Center Section	24.250	24.235			2.680	2.650	1237.793	1222.424	0.286	-354.01	-349.61
Groove in Upper Section	Groove removed										
Bottom "leg" angular section	25.310	25.280	24.550	24.550	0.130	0.120	1.935	1.714	0.286	-0.55	-0.49
Bottom "leg" section	25.310	25.280	24.550	24.550	0.130	0.110	3.869	3.143	0.286	-1.11	-0.90
									Total Weight (lbs)	507.65	519.44
							Total Weight welded to the MCO Shell			509.31	520.83
Revision			0		1		2				
Prepared by/Date		DS	4/16/97	MP	7/14/98	MP	2/9/99				
Checked by/Date		MP	4/16/97	ZGS	7/14/98	ZGS	2/9/99				

MCO Shell											
	O.D. nom. (in.)	O.D. max. (in.)	I.D. nom. (in.)	I.D. min. (in.)	Height nom. (in.)	Height max. (in.)	Volume nom. (in³)	Volume max. (in³)	Density, 304L (lb/in³)	Weight nom. (lbs.)	Weight max. (lbs.)
MCO Shell (welded)	23.985	24.000	22.985	22.970	139.510	139.580	5146.545	5303.601	0.286	1471.91	1516.83
									Total Weight	1471.91	1516.83
									Total Weight welded	1471.91	1516.83
Revision			0		1		2				
Prepared by/Date		DS	4/16/97	MP	7/14/98	MP	2/9/99				
Checked by/Date		MP	4/16/97	ZGS	7/14/98		2/9/99				

MCO Shell Bottom											
	O.D. nom. (in.)	**O.D. max. (in.)**	**I.D. nom. (in.)**	**I.D. min. (in.)**	**Height nom. (in.)**	**Height max. (in.)**	**Volume nom. (in^3)**	**Volume max. (in^3)**	**Density, 304L (lb/in^3)**	**Weight nom. (lbs.)**	**Weight max. (lbs.)**
Shell Bottom	23.985	24.000			2.740	2.750	1237.998	1244.071	0.286	354.07	355.80
Center Take-Outs											
	Radius nom. (in.)	**Radius min. (in.)**	**Rrev nom. (in.)**	**Rrev min. (in.)**	**Area nom. ($in.^2$)**	**Area min. ($in.^2$)**	**Volume nom. (in^3)**	**Volume min. (in^3)**			
"1/4 Toroid" where $V=2\pi(Rrev)(Area)$	0.500	0.4900	11.7120	11.6690	0.1963	0.1886	14.4491	13.8260	0.286	-4.13	-3.95
	O.D. nom. (in.)	**O.D. min. (in.)**	**I.D. nom. (in.)**	**I.D. max. (in.)**	**Height nom. (in.)**	**Height min. (in.)**	**Volume nom. (in^3)**	**Volume min. (in^3)**			
Center Section	23.025	23.010			0.730	0.715	303.957	297.323	0.286	-86.93	-85.03
Center Hole	2.500	2.470			0.880	0.860	4.320	4.121	0.286	-1.24	-1.18
Center Angles (both sides of hole)	0.880	0.860			0.880	0.860	0.535	0.500	0.286	-0.16	-0.14
Side Take-Outs											
	O.D. nom. (in.)	**O.D. min. (in.)**	**I.D. nom. (in.)**	**I.D. max. (in.)**	**Height nom. (in.)**	**Height min. (in.)**	**Volume nom. (in^3)**	**Volume min. (in^3)**			
Side Bottom Angles	23.985	23.970	23.465	23.500	1.100	1.000	20.506	17.523	0.286	-5.86	-5.01
								Total Weight welded (lbs)		**255.75**	**260.48**
Revision			0		1		2				
Prepared by/Date		DS	4/16/97	MP	7/14/98	MP	2/9/99				
Checked by/Date		MP	4/16/97	ZGS	7/14/98	ZGS	2/9/99				

Shield Plug												
	Quantity	O.D. Nominal (in.)	O.D. max. (in.)	I.D. nom. (in.)	I.D. min (in.)	Height nom. (in.)	Height max. (in.)	Volume nom. (in³)	Volume max (in³)	Density, 304L (lb/in³	Weight nom. (lbs.)	Weight max. (lbs)
Top		15.780	15.785			6.750	6.765	1320.102	1323.875	0.286	377.55	378.63
Center		23.980	23.985			1.810	1.825	817.461	824.579	0.286	233.79	235.83
Bottom		22.900	22.915			1.940	1.955	799.029	806.262	0.286	228.52	230.59
		O.D. Nominal (in.)	O.D. min. (in.)	I.D. nom. (in.)	I.D. max (in.)	Height nom. (in.)	Height min. (in.)	Volume nom. (in³)	Volume min. (in³)			
Lifting Holes	4	0.658	0.653			1.500	1.500	0.510	0.502	0.286	-0.58	-0.57
Bottom Hole		4.280	4.280			0.500	0.470	7.194	6.762	0.286	-2.06	-1.93
Bottom Vertical Pipe off Bottom Hole		0.609	0.607			3.250	3.220	0.947	0.932	0.286	-0.27	-0.27
Bottom Vertical Pipe to Horizontal to Port #2		1.000	0.997			3.250	3.220	2.553	2.514	0.286	-0.73	-0.72
Horizontal Pipe to Port #3		1.000	0.985			12.500	12.470	9.817	9.502	0.286	-2.81	-2.72
Horizontal Pipe to Port #2		1.000	0.985			8.200	8.170	6.440	6.228	0.286	-1.84	-1.78
Port #4		5.625	5.61			1.125	1.110	27.957	27.437	0.286	-8.00	-7.85
Top Section		3.081	3.080			0.188	0.173	1.402	1.289	0.286	-0.40	-0.37
Upper Middle Section		2.092	2.077			1.186	1.156	4.077	3.917	0.286	-1.17	-1.12
Middle Section		2.750	2.735	2.092	2.108	0.311	0.296	0.389	0.353	0.286	-0.11	-0.10
Middle Section Angle		2.128	2.113			0.056	0.056	0.199	0.196	0.286	-0.06	-0.06
Shoulder		1.825	1.8254			2.626	2.596	6.872	6.794	0.286	-1.97	-1.94
Thread Area		1.000	0.997			1.314	1.284	1.032	1.002	0.286	-0.30	-0.29
Pipe to Center Horizontal Pipe	4	0.656	0.641			0.875	0.860	0.296	0.278	0.286	-0.34	-0.32
Bolt Hole	4	0.542	0.536			1.125	1.095	0.260	0.247	0.286	-0.30	-0.28
Port #3		5.625	5.61			1.125	1.110	27.957	27.437	0.286	-8.00	-7.85
Top Section		3.081	3.080			0.188	0.173	1.402	1.289	0.286	-0.40	-0.37
Upper Middle Section		2.092	2.077			1.186	1.156	4.077	3.917	0.286	-1.17	-1.12
Middle Section		2.750	2.735	2.092	2.108	0.311	0.296	0.389	0.353	0.286	-0.11	-0.10
Middle Section Angle		2.128	2.113			0.056	0.056	0.199	1.739	0.286	-0.06	-0.50
Shoulder		1.825	1.8254			2.626	2.596	6.872	6.794	0.286	-1.97	-1.94
Thread Area		1.000	0.997			1.314	1.284	1.032	1.002	0.286	-0.30	-0.29
Pipe to Center Horizontal Pipe	4	0.656	0.641			0.875	0.860	0.296	0.278	0.286	-0.34	-0.32
Bolt Hole	4	0.542	0.536			1.125	1.095	0.260	0.247	0.286	-0.30	-0.28
SECTION C-C		O.D. Nominal (in.)	O.D. min. (in.)	I.D. nom. (in.)	I.D. max (in.)	Height nom. (in.)	Height min. (in.)	Volume nom. (in³)	Volume min. (in³)			
Port #1		5.625	5.610			1.125	1.110	27.957	27.437	0.286	-8.00	-7.85
Top		2.000	1.985			1.500	1.485	4.712	4.596	0.286	-1.35	-1.31
Mid Section												
Bottom Section to Center		0.953	0.938			3.375	3.330	2.407	2.301	0.286	-0.69	-0.66
Horizontal Pipe	4	0.656	0.641			0.875	0.860	0.296	0.278	0.286	-0.34	-0.32
Bolt Hole	4	0.542	0.536			1.125	1.095	0.260	0.247	0.286	-0.30	-0.28
Revision		0		1		2						
Prepared by/Date	DS	4/16/97	MP	7/14/98	mll	2/9/99						
Checked by/Date	MP	4/16/97	ZGS	7/14/98	ZGS	2/9/99						

Port #2												
Top Section		5.500	5.485			1.125	1.110	26.728	26.228	0.286	-7.64	-7.50
Upper Middle Section		3.081	3.080			0.188	0.173	1.402	1.289	0.286	-0.40	-0.37
Middle Section		2.128	2.113			0.937	0.907	3.333	3.181	0.286	-0.95	-0.91
Middle Section Angle		2.750	2.735	2.128	2.143	0.311	0.296	0.371	0.336	0.286	-0.11	-0.10
Shoulder		2.128	2.113			0.056	0.056	0.199	0.196	0.286	-0.06	-0.06
Thread Area		1.825	1.8254			2.561	2.531	6.702	6.624	0.286	-1.92	-1.89
Pipe to Center Horizontal Pipe		1.000	0.997			1.314	1.284	1.032	1.002	0.286	-0.30	-0.29
Bolt Hole	4	0.656	0.641			0.876	0.860	0.296	0.278	0.286	-0.34	-0.32
	4	0.542	0.536			1.125	1.095	0.260	0.247	0.286	-0.30	-0.28
Pipes												
Horizontal off of Port #1		1.000	0.97			7.940	7.910	6.236	5.845	0.286	-1.78	-1.67
Vertical bottom to Horizontal to Port #1		1.000	0.985			3.250	3.220	2.553	2.454	0.286	-0.73	-0.70
Horizontal off of Port #4		1.000	0.97			7.980	7.950	6.267	5.875	0.286	-1.79	-1.68
Vertical to Horizontal to Port #4		1.000	0.985			3.250	3.220	2.553	2.454	0.286	-0.73	-0.70
										Total Weight	778.61	785.08
Plugs												
	Quantity	O.D. Nominal (in.)	O.D. max. (in.)	I.D. nom. (in.)	I.D. min (in.)	Height nom. (in.)	Height max. (in.)	Volume nom. (in³)	Volume max (in³)	Density, 304L (lb/in³	Weight nom. (lbs.)	Weight max. (lbs)
6.9L	1	1.000	1.015			6.900	6.900	5.419	5.583	0.286	1.55	1.60
2.7L	2	1.000	1.015			2.700	2.700	2.121	2.185	0.286	1.21	1.25
2.0L	1	1.000	1.015			2.000	2.000	1.571	1.618	0.286	0.45	0.46
Angle Take-Outs												
		O.D. Nominal (in.)	O.D. min. (in.)	I.D. nom. (in.)	I.D. max (in.)	Height nom. (in.)	Height min. (in.)	Volume nom. (in³)	Volume min. (in³)			
6.9L	1	1.000	0.985	0.750	0.799	7	7	1.203	0.912	0.286	-0.34	-0.26
2.7L	2	1.000	0.985	0.750	0.799	2.800	2.700	0.481	0.352	0.286	-0.14	-0.10
2.0L	1	1.000	0.985	0.750	0.799	2.800	2.700	0.481	0.352	0.286	-0.14	-0.10
										Weight of the plugs	2.59	2.86
										Weight w/plugs	781.20	787.93
Revision		0		1		2						
Prepared by/Date	DS	4/16/97	MP	7/14/98		2/9/99						
Checked by/Date	MP	4/16/97	ZGS	7/14/98	ZGS	2/9/99						

Internal Filter Guard Plate												
Guard Plate												
	# of Holes	**O.D. Nominal (in.)**	**O.D. max. (in.)**	**I.D. nom. (in.)**	**I.D. min (in.)**	**Height nom. (in.)**	**Height max. (in.)**	**Volume nom. (in³)**	**Volume max (in³)**	**Density, 304L (lb/in³)**	**Weight nom. (lbs.)**	**Weight max. (lbs)**
Plate		22.500	22.530			1.500	1.530	596.412	609.963	0.286	170.57	174.45
Take-outs (all at minimums for max. weight)												
		O.D. Nominal (in.)	**O.D. min. (in.)**	**I.D. nom. (in.)**	**I.D. max (in.)**	**Height nom. (in.)**	**Height min. (in.)**	**Volume nom. (in³)**	**Volume min. (in³)**			
Center Hole		4.250	4.250			1.500	1.470	21.279	20.854	0.286	-6.09	-5.96
Side Angle		22.500	22.470	21.830	21.936	1.250	1.220	14.579	11.361	0.286	-4.17	-3.25
		O.D. Nominal (in.)	**O.D. min. (in.)**	**I.D. nom. (in.)**	**I.D. max (in.)**	**Height nom. (in.)**	**Height min. (in.)**	**Volume nom. (in³)**	**Volume min. (in³)**			
Holes	4	1.000	0.940			1.500	1.470	1.178	1.020	0.286	-1.35	-1.17
Chamfers	4	1.500	1.440	1.000	1.000	0.250	0.220	0.123	0.093	0.286	-0.14	-0.11
										Weight of the Plate	**158.83**	**163.96**
Guard Plate Ring												
		O.D. Nominal (in.)	**O.D. max. (in.)**	**I.D. nom. (in.)**	**I.D. min (in.)**	**Height nom. (in.)**	**Height max. (in.)**	**Volume nom. (in³)**	**Volume max (in³)**			
Ring		22.500	22.530			4.250	4.280	1689.833	1701.761	0.286	483.29	486.70
Take-outs (all at minimums for max. weight)												
		O.D. Nominal (in.)	**O.D. min. (in.)**	**I.D. nom. (in.)**	**I.D. max (in.)**	**Height nom. (in.)**	**Height min. (in.)**	**Volume nom. (in³)**	**Volume min. (in³)**			
Center Hole		20.500	20.470			4.250	4.220	1402.770	1388.795	0.286	-401.19	-397.20
Top and Bottom Side Angles		22.500	22.470	21.880	21.970	0.310	0.280	6.699	4.886	0.286	-1.92	-1.40
										Weight of the Ring	**80.18**	**88.11**
										Total Weight	**239.01**	**252.07**
Revision		0		1		2						
Prepared by/Date	DS	4/16/97	MP	7/14/98		2/9/99						
Checked by/Date	MP	4/16/97	ZGS	7/14/98		2/9/99						

Process Valves												
Process Valve												
	Quantity	O.D. Nominal (in.)	O.D. max. (in.)	I.D. nom. (in.)	I.D. min (in.)	Height nom. (in.)	Height max. (in.)	Volume nom. (in³)	Volume max (in³)	Density, 304L (lb/in³)	Weight nom. (lbs.)	Weight max. (lbs)
Bottom Threaded Portion		1.823	1.825			2.529	2.549	6.601	6.668	0.286	1.89	1.91
Non-threaded Part Below Lip		1.771	1.776			0.14	0.145	0.345	0.359	0.286	0.10	0.10
Lip		2.378	2.383			0.311	0.316	1.381	1.409	0.286	0.40	0.40
		Base nom. (in.)	Base max. (in.)	Triangle Height nom. (in.)	Triangle Height max. (in.)	Height nom. (in.)	Height max. (in.)	Volume nom. (in³)	Volume max (in³)			
Hex Head (Volume=$A_{hexagon}$*h, where $A_{hexagon}$=Area of 12 equal triangles in the hexagon		0.326	0.328	0.565	0.568	0.500	0.505	0.553	0.565	0.286	0.16	0.16
Take-outs (all at minimums for max. weight)												
		O.D. Nominal (in.)	O.D. min. (in.)	I.D. nom. (in.)	I.D. max (in.)	Height nom. (in.)	Height min. (in.)	Volume nom. (in³)	Volume min. (in³)			
Center Hole		1.000	0.970			2.500	2.530	1.963	1.870	0.286	-0.56	-0.53
Bottom Angle		1.823	1.820	1.000	1.005	0.248	0.235	0.228	0.212	0.286	-0.06	-0.06
Side Holes (V= Area of an ellipse cut at a 45° angle*depth)	3	0.688	0.685			0.412	0.410	0.217	0.214	0.286	-0.19	-0.18
Lip angle		2.378	2.373	2.128	2.151	0.125	0.115	0.055	0.045	0.286	-0.02	-0.01
									Process Valve Total Weight		1.71	1.78
Rupture Disk/Process Valve	(also used Continental Disc Corporation dwg. # CD 30820)											
	Quantity	O.D. Nominal (in.)	O.D. max. (in.)	I.D. nom. (in.)	I.D. min (in.)	Height nom. (in.)	Height max. (in.)	Volume nom. (in³)	Volume max (in³)	Density, 304L (lb/in³)	Weight nom. (lbs.)	Weight max. (lbs)
Bottom Threaded Portion		1.823	1.825			2.529	2.549	6.601	6.668	0.286	1.89	1.91
Non-threaded Part Below Lip		1.771	1.776			0.14	0.145	0.345	0.359	0.286	0.10	0.10
Lip		2.378	2.383			0.311	0.316	1.381	1.409	0.286	0.40	0.40
		Base nom. (in.)	Base max. (in.)	Triangle Height nom. (in.)	Triangle Height max. (in.)	Height nom. (in.)	Height max. (in.)	Volume nom. (in³)	Volume max (in³)			
Hex Head (Volume=$A_{hexagon}$*h, where $A_{hexagon}$=Area of 12 equal triangles in the hexagon		0.326	0.328	0.565	0.568	0.500	0.505	0.553	0.565	0.286	0.16	0.16
Take-outs (all at minimums for max. weight)												
		O.D. Nominal (in.)	O.D. min. (in.)	I.D. nom. (in.)	I.D. max (in.)	Height nom. (in.)	Height min. (in.)	Volume nom. (in³)	Volume min. (in³)			
Center Hole Top Portion (excess removed substituted for holes drilled in the top hexagon)		0.900	0.870			0.922	0.967	0.587	0.575	0.286	-0.17	-0.16
Center Hole		1.000	0.970			2.488	2.478	1.954	1.831	0.286	-0.56	-0.52
Bottom Angle		1.823	1.820	1.000	1.005	0.248	0.235	0.226	0.212	0.286	-0.06	-0.06
Side Holes (V= Area of an ellipse cut at a 45° angle*depth)	3	0.688	0.685			0.412	0.410	0.217	0.214	0.286	-0.19	-0.18
Lip angle		2.378	2.373	2.128	2.151	0.125	0.115	0.055	0.045	0.286	-0.02	-0.01
								Rupture Disk/Process Valve Total Weight			1.55	1.63
Revision		0		1		2						
Prepared by/Date	DS	4/16/97	MP	7/14/98		2/9/99						
Checked by/Date	MP	4/16/97	ZGS	7/14/98		2/9/99						

Process Port Cover Plates												
Plate												
	Quantity	O.D. Nominal (in.)	O.D. max. (in.)	I.D. nom. (in.)	I.D. min (in.)	Height nom. (in.)	Height max. (in.)	Volume nom. (in³)	Volume max (in³)	Density, 304L (lb/in³)	Weight nom. (lbs.)	Weight max. (lbs)
Plate	4	5.500	5.515			1.000	1.030	23.758	24.605	0.286	27.18	28.15
Bolt Hole		O.D. Nominal (in.)	O.D. min. (in.)	I.D. nom. (in.)	I.D. max (in.)	Height nom. (in.)	Height min. (in.)	Volume nom. (in³)	Volume min. (in³)			Weight min. (lbs)
Top of Hole	17	1.125	1.110			0.750	0.720	0.746	0.697	0.286	-3.62	-3.39
Center Section	4	0.537	0.531			0.375	0.360	0.085	0.080	0.286	-0.10	-0.09
Seal Groove	4	3.555	3.550	3.297	3.302	0.100	0.097	0.139	0.129	0.286	-0.16	-0.15
										Weight of Plate	23.30	24.52
Cover Bolt												
		O.D. Nominal (in.)	O.D. max. (in.)	I.D. nom. (in.)	I.D. min (in.)	Height nom. (in.)	Height max. (in.)	Volume nom. (in³)	Volume max (in³)	Density, 304L (lb/in³)	Weight nom. (lbs.)	Weight max. (lbs)
Hex Head/Cover Bolt	17	0.866	0.881			0.780	0.810	0.459	0.494	0.286	2.23	2.40
Center	17	0.490	0.505			2.118	2.133	0.399	0.427	0.286	1.94	2.08
										Flange Bolt Weight	4.18	4.48
										Total Weight	27.47	29.00
Revision		0		1		2						
Prepared by/Date	DS	4/16/97	MP	7/14/98		2/9/99						
Checked by/Date	MP	4/16/97	ZGS	7/14/98		2/9/99						

Internal Filter Assembly and Partial Manifold							
According to HNF-S-046, Rev. 3						**Weight nom. (lbs.)**	**Weight max. (lbs)**
		Total Weight shall not exceed				**17**	**50**
Revision		0		1		2	
Prepared by/Date	DS	4/16/97	**MP**	7/14/98	mP	2/9/99	
Checked by/Date	MP	4/16/97	**ZGS**	7/14/98	ZGS	2/9/99	

Basket Stabilizer Extension											
	O.D. nom. (in.)	**O.D. max. (in.)**	**I.D. nom. (in.)**	**I.D. min. (in.)**	**Height nom. (in.)**	**Height max. (in.)**	**Volume nom. (in^3)**	**Volume max. (in^3)**	**Density, 304L (lb/in^3)**	**Weight nom. (lbs.)**	**Weight max. (lbs.)**
Part 1	4.250	4.250	0.609	0.594	1.375	1.380	19.106	19.195	0.286	5.46	5.49
Part 2	4.250	4.250	2.750	2.715	0.180	0.210	1.484	1.763	0.286	0.42	0.50
Part 3	4.250	4.250	1.247	1.241	1.075	1.150	13.937	14.923	0.286	3.99	4.27
Part 4	4.250	4.250	1.287	1.281	0.370	0.430	4.768	5.546	0.286	1.36	1.59
Part 5	5.150	5.165	1.287	1.281	0.120	0.195	2.344	3.834	0.286	0.67	1.10
Part 6	5.150	5.165	2.175	2.170	1.750	1.765	29.952	30.453	0.286	8.57	8.71
Part 7	4.250	4.250	2.175	2.170	1.500	1.530	15.706	16.046	0.286	4.49	4.59
Take-outs											
	O.D. nom. (in.)	**O.D. min. (in.)**	**I.D. nom. (in.)**	**I.D. max. (in.)**	**Height nom. (in.)**	**Height min. (in.)**	**Volume nom. (in^3)**	**Volume min. (in^3)**			
Bottom Angles	3.115	3.110	2.715	2.720	0.490	0.415	0.449	0.371	0.286	-0.13	-0.11
Inside Center Angles	1.8610	1.819	1.287	1.293	0.200	0.200	0.142	0.129	0.286	-0.04	-0.04
									Total Weight	**24.80**	**26.10**
Revision				0		1		2			
Prepared by/Date			DS	4/16/97	**MP**	7/14/98		2/9/99			
Checked by/Date			MP	4/16/97	**ZGS**	7/14/98		2/9/99			

Mechanical Closure Dip Tube											
	O.D. nom. (in.)	O.D. max. (in.)	I.D. nom. (in.)	I.D. min. (in.)	Height nom. (in.)	Height max. (in.)	Volume nom. (in^3)	Volume max. (in^3)	Density, 304L (lb/in^3)	Weight nom. (lbs.)	Weight max. (lbs.)
Tube	1.315	1.330	0.599	0.584	146.945	146.960	158.161	164.805	0.286	45.23	47.13
									Total Weight	45.23	47.13
Revision			0		1		2				
Prepared by/Date		DS	4/16/97	MP	7/14/98		2/9/99				
Checked by/Date		MP	4/16/97	ZGS	7/14/98	ZGS	2/9/99				

Dip Tube Guide Cone											
	O.D. nom. (in.)	**O.D. max. (in.)**	**I.D. nom. (in.)**	**I.D. min. (in.)**	**Height nom. (in.)**	**Height max. (in.)**	**Volume nom. (in^3)**	**Volume max. (in^3)**	**Density, 304L (lb/in^3)**	**Weight nom. (lbs.)**	**Weight max. (lbs.)**
Top and Middle	2.650	2.655	1.375	1.360	2.545	2.560	10.258	10.454	0.286	2.93	2.99
Bottom	2.750	2.765	1.375	1.360	0.590	0.605	2.628	2.754	0.286	0.75	0.79
Take-outs											
	O.D. nom. (in.)	**O.D. min. (in.)**	**I.D. nom. (in.)**	**I.D. max. (in.)**	**Height nom. (in.)**	**Height min. (in.)**	**Volume nom. (in^3)**	**Volume min. (in^3)**			
Top Inside Angle	1.725	1.710	1.375	1.390	0.515	0.500	0.219	0.195	0.286	-0.06	-0.06
Top Outside Angle	2.650	2.655	2.130	2.145	0.515	0.500	0.503	0.481	0.286	-0.14	-0.14
									Total Weight	3.48	3.58

Revision		0		1		2				
Prepared by/Date	DS	4/16/97	MP	7/14/98	mP	2/8/99				
Checked by/Date	MP	4/16/97	ZGS	7/14/98	ZGS	2/9/99				

Basket Support Plate											
	Length nom. (in.)	**Length max. (in.)**	**Width nom. (in.)**	**Width max. (in.)**	**Height nom. (in.)**	**Height max. (in.)**	**Volume nom. (in^3)**	**Volume max. (in^3)**	**Density, 304L (lb/in^3)**	**Weight nom. (lbs.)**	**Weight max. (lbs.)**
Support Plate	9.830	9.845	1.240	1.255	0.500	0.530	6.095	6.548	0.286	1.74	1.87
"Take-outs"											
	Length nom. (in.)	**Length min. (in.)**	**Width nom. (in.)**	**Width min. (in.)**	**Height nom. (in.)**	**Height min. (in.)**	**Volume nom. (in^3)**	**Volume min. (in^3)**			
Angular section	0.190	0.160	0.190	0.160	0.500	0.470	0.009	0.006	0.288	0.00	0.00
Rectangular Section	0.125	0.110	0.590	0.580	0.500	0.470	0.018	0.015	0.286	-0.01	0.00
Radius (length=radius)	0.500	0.53(max.)	1.000	0.940	0.500	0.47 (min.), 0.53 (max.)	0.027	-0.013	0.286	-0.01	0.00
									Total Weight	**1.73**	**1.87**
									Welded Weight	**1.74**	**1.87**
Revision			0		1		2				
Prepared by/Date		DS	4/16/97	MP	7/14/98	mp	2/9/99				
Checked by/Date		MP	4/16/97	ZGS	7/14/98	ZGS	2/9/99				

Mark 1A Storage Basket				
	Quantity	Volume (in^3)	Density (lb/in^3)	Weight (lbs.)
Bottom Plate	1	[redacted]	0.286	[redacted]
Center Post	1	[redacted]	0.286	[redacted]
[redacted]	[redacted]	[redacted]	[redacted]	[redacted]
Support Rods	6	62.9898	0.286	108.09
[redacted]	[redacted]	[redacted]	[redacted]	[redacted]
Fuel Rack	1	202.0600	0.1000	20.21
Shroud	1	45.0940	0.286	12.90
Spacer	1	N/A	N/A	Negligible
			Total Weight (lbs)	[redacted]

Revision		0		1		2
Prepared by/Date	DS	4/16/97	MP	7/14/98		2/9/99
Checked by/Date	MP	4/16/97	ZGS	7/14/98		2/9/99

Mark 1A Scrap Basket							
	Quantity	Volume (in^3)	Density (lb/in^3)	Weight (lbs.)			
Bottom Plate	1	429.1800	0.286	122.75			
[redacted]							
Center Post	1	[redacted]	0.286	[redacted]			
[redacted]							
Side Post	6	62.9820	0.286	108.08			
[redacted]							
Shroud	Shroud weight accounted for in Dividers below						
Seal	1	5.3160	0.322	1.71			
Fines Divider Tube	1	75.4200	0.322	24.29			
Dividers	6	82.7000	0.322	159.78			
			Total Weight (lbs)	[redacted]			
Revision			0		1		2
Prepared by/Date		DS	4/16/97	**MP**	7/14/98	mp	2/9/99
Checked by/Date		MP	4/16/97	**ZGS**	7/14/98	ZGS	2/9/99

Mark IV Storage Basket

	Quantity	Volume (in^3)	Density (lb/in^3)	Weight (lbs.)
[redacted]	1	[redacted]	0.286	[redacted]
[redacted]	1	[redacted]	[redacted]	[redacted]
Round Bar	[redacted]	[redacted]	0.286	[redacted]
Center Post	1	[redacted]	0.286	[redacted]
Sheet Metal	1	37.4880	0.286	10.72
[redacted]	[redacted]	[redacted]	[redacted]	[redacted]
			Total Weight (lbs)	[redacted]

Revision		0		1		2
Prepared by/Date	DS	4/16/97	**MP**	7/14/98		2/9/99
Checked by/Date	MP	4/16/97	**ZGS**	7/14/98		2/9/99

Mark IV Scrap Basket							
	Quantity	Volume (in^3)	Density (lb/in^3)	Weight (lbs.)			
Base Plate	1	[redacted]	0.286	[redacted]			
[redacted]	[redacted]	[redacted]	[redacted]	[redacted]			
Center Post	1	91.2240	0.286	26.09			
Side Posts	[redacted]	[redacted]	0.286	[redacted]			
[redacted]	[redacted]	[redacted]	[redacted]	[redacted]			
Shroud	Shroud weight accounted for in Dividers below						
Fines Tube	1	69.6200	0.322	22.42			
Dividers	6	103.0000	0.322	199.00			
Flow Restricter	1	5.8800	0.322	1.89			
			Total Weight (lbs)	[redacted]			
Revision			0		1		2
Prepared by/Date		DS	4/16/97	MP	7/14/98		2/9/99
Checked by/Date		MP	4/16/97	ZGS	7/14/98	ZGS	2/9/99

SPR Fuel Basket				
	Quantity	Volume (in^3)	Density (lb/in^3)	Weight (lbs.)
Base Plate	TBD	TBD	TBD	TBD
Center Post	TBD	TBD	TBD	TBD
Side Posts	TBD	TBD	TBD	TBD
Shroud	Shroud weight accounted for in Dividers below			
			Total Weight (lbs)	0.00
Revision			2	
Prepared by/Date		MP	2/9/99	
Checked by/Date		RGS	2/9/99	

This page intentionally left blank.

PARSONS	**CALCULATION PACKAGE**	**FILE NO:**	KH-8009-8-02
		DOC NO:	HNF-SD-SNF-DR-003, Rev. 2, Appendix 4
		PAGE	1of 55

PROJECT NAME:
MCO Final Design

CLIENT:
DE&S Hanford, Inc.

CALCULATION TITLE:
MCO CLOSURE BOLT PRELOAD MODELING AND RESPONSE

PROBLEM STATEMENT OR OBJECTIVE OF CALCULATION:

THE OBJECTIVE OF THIS CALCULATION PACKAGE IS TO EVALUATE THE PRELOAD REQUIRED FOR SEATING OF THE CONTAINMENT SEAL AT THE SHIELD PLUG.

DOCUMENT REVISION	AFFECTED PAGES	REVISION DESCRIPTION	PREPARED BY INITIALS / DATE	CHECKED BY INITIALS / DATE	APPROVED BY INITIALS / DATE
0	1-52	Initial Issue	Charles Temus Pages 1-16, 19 Bob Winkel Pages 17-18, 20-52	Bob Winkel Pages 1-16, 19 Zachary Sargent Pages 17-18, 20-52	Charles Temus
1	1-55	Revised to reflect change from 150 psig design pressure and design temperature change from 375°C to 132°C	Henry Averette	Zachary Sargent	Charles Temus
2	1-55	Revised to reflect new design pressure of 150 psig and new material for shell collar.	2/4/99	2/4/99	C/T. 2/9/99

LIST OF TABLES

APPENDICES

1. INTRODUCTION

The MCO assembly is a single purpose Spent Nuclear Fuel (SNF) container that is capable of maintaining subcriticality at all times and maintain SNF containment and confinement after being closed and sealed. The MCO assembly consists of a shell, a shield plug and one to six SNF baskets. After the MCO is loaded with fuel, the shield plug is installed with the containment seal, the locking ring screwed down by means of double lead buttress threads, and the jacking bolts (hereinto refered as the 'bolts') are inserted in the locking ring. The bolts are then torqued to achieve the necessary preload to maintain the seal.

The screws and the connecting components – the locking ring and the shield plug – are evaluated for the loads that are applied to the bolts. These loads consist of the preload, the torque uncertainty and the applied pressure loads.

2. REFERENCES

1. Bickford, John H., An Introduction to the Design and Behavior of Bolted Joints, 2nd Edition, Marcel Dekker, Inc., New York, NY 1990.
2. Multi-Canister Overpack Design Report, Book 1, Appendix 13, "Main Seal Data".
3. Helicoflex High Performance Sealing Data Brochure.
4. Industrial Fasteners Institute, Fastener Standards, 6th Edition, Nova Machine Products Corp., Middleburg Heights, OH, 1988.
5. ASME Boiler and Pressure Vessel Code, Section II - Materials, Part D - Properties, 1998 Edition .
6. ASME Boiler and Pressure Vessel Code, Section III, Division 1, Subsection NB - Class 1 Components, 1998 Edition and 1998 Appendix F.
7. Performance Specification for the Spent Nuclear Fuel Multi-Canister Overpack, HNF-S-0426, Revision 5, December 1998.

3. ASSUMPTIONS

1. A design pressure P of 150 psig is uniformly applied simultaneously with a design temperature of 132°C.
2. Helicoflex seating preload seal requirement P_{SS} of 1700 lb./in [3].
3. Diameter of the seal is D_s = 23.420 - 0.186 = 23.234 inches [2]

4. Maximum design temperature is 132°C (270°F)

4. MATERIAL PROPERTIES

The shield plug is fabricated from Type 304L (forging) stainless steel, the shell collar is fabricated from dual certified 304/304L stainless steel and the locking ring is fabricated from Type F304N (Forging) stainless steel. The bolts are fabricated from SA-193 Grade B8S or B8SA (Nitronic 60).

5. METHOD OF ANALYSIS

The minimum preload for the bolts are determined by considering the pressure and the required compressive load to maintain the seal. Once the minimum preload is determined, the maximum preload is calculated based on the uncertainties of the torquing equipment, lubrication and friction of the bolts.

5.1 Analysis Procedure

a) Determine compressive load required to seat the seal.

b) Determine minimum compressive load required to maintain seal.

c) Calculate torque to maintain the seal considering tool scatter, operator error, control error, relaxation and external load.

d) Check maximum bolt preload with maximum scatter, plus external load, plus thermal load.

e) Check that minimum seal compression is maintained for a preload with maximum negative scatter, external load and thermal load. Check that the minimum loading during initial thightening is sufficient to seat the seal.

f) If minimum seal is not maintained, increase torque and recalculate.

g) Check maximum stress in the bolt, under the bolt and in the thread wall. Verify thread adequacy.

6. GEOMETRY

The geometry for this calculation is per Drawing H-2-828042 (MCO Mechanical Closure) and Drawing H-2-828045 (MCO Mechanical Closure Shield Plug).

The bolts are (Quantity 18) 1-1/2-8 UN - 2A set screws:

The bolt diameter is

$$D_b = 1.50 \text{ in}^2$$

Geometry of the bolt is per Reference 4, Section A, Table 1.

The stress area is

$$A_s = 1.49 \text{ in}^2$$

and the thread root area is

$$A_r = 1.41 \text{ in}^2$$

The thread stripping area for 2A external thread, per inch of engagement is

$$As_s = 2.57 \text{ in}^2/\text{in.}$$

The thread stripping area for 2B internal thread, per inch of engagement is

$$As_n = 3.50 \text{ in}^2/\text{in.}$$

7. MATERIAL PROPERTIES

The material properties are taken from [5] and are summarized in Table 1. The loading temperature is 132°C (270°F)

Table 1: Material Properties for MCO Closure Components

SA - 182 F304L Forging (Shield Plug)

	70° F	200° F	300° F	270° F
E - psi	**28.3×10^6**	**27.6×10^6**	**27.0×10^6**	**27.18×10^6**
S_M - psi	**16,700**	**16,700**	**16,700**	**16,700**
S_Y- psi	**25,000**	**21,300**	**19,100**	**19,760**
S_U- psi	**65,000**	**61,500**	**56,500**	**58,000**
Mean Coefficient of Thermal Expansion from 70° to Temp. - in/in/°F x 10^{-6}				
	70°F	250°F	300°F	270°F
α-in/in/°F	**8.46×10^{-6}**	**8.90×10^{-6}**	**9.00×10^{-6}**	**8.94×10^{-6}**

SA - 182 F304N Forging (Locking Ring)

	70° F	200° F	300° F	270° F
E - psi	**28.3×10^6**	**27.6×10^6**	**27.0×10^6**	**27.18×10^6**
S_M - psi	**23,300**	**23,300**	**22,500**	**22,740**
S_Y- psi	**35,000**	**28,700**	**25,000**	**26,110**
S_U- psi	**80,000**	**80,000**	**75,900**	**77,130**
Mean Coefficient of Thermal Expansion from 70° to Temp. - in/in/°F x 10^{-6}				
	70°F	250°F	300°F	270°F
α-in/in/°F	**8.46×10^{-6}**	**8.90×10^{-6}**	**9.00×10^{-6}**	**8.94×10^{-6}**

SA - 182 F304 Forging (Shell Collar)

	70° F	200° F	300° F	270° F
E - psi	**28.3×10^6**	**27.6×10^6**	**27.0×10^6**	**27.18×10^6**
S_M - psi	**20,000**	**20,000**	**20,000**	**20,000**
S_Y- psi	**30,000**	**25,000**	**22,500**	**23,250**
S_U- psi	**75,000**	**71,000**	**66,000**	**67,500**
Mean Coefficient of Thermal Expansion from 70° to Temp. - in/in/°F x 10^{-6}				
	70°F	250°F	300°F	270°F
α-in/in/°F	**8.46×10^{-6}**	**8.90×10^{-6}**	**9.00×10^{-6}**	**8.94×10^{-6}**

Table 1: Material Properties for MCO Closure Components, cont'd.

SA - 193 Grade B8S or B8SA (Bolting)

	70° F	200° F	300° F	270° F
E - psi	**28.3×10^6**	**27.6×10^6**	**27.0×10^6**	**27.18×10^6**
S_M - psi	**16,700**	**13,000**	**11,000**	**11,600**
S_Y- psi	**50,000**	—	—	—
S_U- psi	**95,000**	—	—	—
Mean Coefficient of Thermal Expansion from 70° to Temp. - in/in/°F x 10^{-6}				
	70°F	250°F	300°F	270°F
α-in/in/°F	**8.46×10^{-6}**	**8.90×10^{-6}**	**9.00×10^{-6}**	**8.94×10^{-6}**

8. ACCEPTANCE CRITERIA

The minimum preload must be maintained at or above the load required to maintain the seal. For all in-service combinations, including temperature cycling, the stress levels in the shield plug under the bolts, in the collar threads and in the locking ring threads should not exceed yield in order to avoid potential seal load losses. Plastic deformation of any of the components is permitted if the tight seal criteria of Appendix E of the ASME Code, Section III is met.

Appendix E of the ASME Code, Section III, Paragraph E-1210, requires the bolt stress resisting the pressure loading plus the minimum loading to ensure a tight joint at the seal should not exceed S_M at the design temperature. The same paragraph also requires the bolt stress necessary to seat the seal to not exceed S_M at atmospheric pressure.

The derivation of minimum seal loading to ensure tight joint conditions uses the results of analysis and testing performed at Garlock Helicoflex in Columbia,SC; these results are shown in [2].

A seal (herein termed the “test seal”) of identical materials and construction of the seal used in the MCO design (herein termed the “MCO seal”) was loaded in an instrumented test fixture to the position of optimum compression. The load at this position is referred to as Y_2 (lb.). From this position, the seal is unloaded until leakage is detected using helium leakage rate equipment. The load prior to the detection of leakage, done by a conservative calculation, is the minimum required load to ensure a tight joint and is referred to as Y_1 (lb.). the load at which leakage was detected in this test was achieved at a considerably lower value.

Test Article Geometry and Test Results

$D_{OST} = 3.470$ in. Outer seal diameter, test article

$d_{ST} = 0.176$ in. Cross section diameter, test article

$D_{ST} = D_{OST} - d_{ST}$ Sealing diameter, test article

$= 3.470 - 0.176$

$= 3.294$ in.

Analysis indicated a minimum calculated load necessary to ensure a tight joint = 3500 lb. (Actual leakage during testing was detected at 600 lb.).

The minimum load per inch to maintain this tight joint condition is:

$$y_1 \text{ (test seal minimum)} = \frac{MinimumSealingLoad}{\pi(D_S)} = \frac{3500}{\pi(3.294)}$$

$$= 338.2 \text{ lb./in.}$$

Correlation between the MCO Seal and the Test Seal at Minimum Sealing Requirement

The MCO seal is constructed with a cross-section diameter of 0.186 inches [2]. The minimum load per unit length required to ensure a tight joint with the MCO seal is derived by multiplying the load per unit length of the test seal by the ratio of $\sqrt{d_{mco} / d_{ST}}$ [3]:

$$y_1 \text{ (MCO seal)} = 338.2\sqrt{0.186 / 0.176}$$

$$= 347.7 \text{ lb./in.} = 60.9 \text{ daN-cm}^{-1}$$

As reference [3] lists y_1 for a 4.7 mm (0.186 in.) silver jacketed seal as 60 daN-cm^{-1}, the minimum load is conservatively taken as 60.9 daN-cm^{-1}.

$$y_1 = 60.9 \text{ daN.}^{cm-1} = 347.7 \text{ lb./in.} = 348 \text{ lb./in.}$$

9. LOAD COMBINATIONS

Since the drop loads are taken directly through the shield plug to the shell, only those loads generated from the pressure and the preload required to maintain the seal will be transmitted through the bolts.

10. ANALYSIS

a) Preload required to seat the seal.

Test results contained in [2] demonstrate that a load of 16,900 lb. was required to seat the test seal. In a manner similar to the determination of minimum sealing load for the MCO seal, the seating load per inch for the MCO seal is determined:

Y_2 (test seal) = 16,900 lb. Total Load

$$y_2 \text{ (test seal)} = \frac{16900}{\pi\ (3.294)} \qquad \text{Load per inch circumference}$$

$$= 1633.1 \text{ lb/in}$$

$$y_2 \text{ (MCO seal)} = 1633.1 \sqrt{\frac{0.186}{0.176}}$$

$$= 1679 \text{ lb/in} = 294 \text{ daN*cm}^{-1}$$

The MCO seal specification shows a y_1 load/length of 1700 lb/in (298 daN-cm^{-1}). This value will be used in the analysis. The minimum load to seat the MCO seal is determined from y_2 (seating load - lb/in) and D_S (sealing diameter = 23.234 in).

$$P_{MIN} = (D_S)(y_2)(\pi) \qquad \text{Load required to seat the seal}$$

$$= (23.234 \text{ in})(1700 \text{ lb/in})(\pi)$$

$$= 1.241 \times 10^5 \text{ lb}$$

b) Minimum preload required to maintain the seal.

The minimum load to maintain the MCO seal is determined from y_1 (minimum seal load lb/in) and D_S (sealing diameter = 23.234 in).

$$SL = (D_S)(y_1)(\pi) \qquad \text{Minimum sealing load}$$

$$= (23.234 \text{ in})(348 \text{ lb/in})(\pi)$$

$$= 2.540 \times 10^4 \text{ lb}$$

The load generated by the internal design pressure is

$$P_L = \frac{(\pi)(P)(D_S)^2}{4} = \frac{(3.1416)(150 \text{ psi})(23.234)^2}{4} = 6.36 \times 10^4 \text{ lb.}$$

The minimum total bolt load at closure temperature becomes

$$LP_{MIN} = P_L + SL = 6.360 \times 10^4 \text{ lb} + 2.540 \times 10^4 \text{ lb.}$$

$$LP_{MIN} = 8.90 \times 10^4 \text{ lb.}$$

Checking the compliance with Subsection NB, NB-3231 [6], which states that the design mechanical loads calculated based on the equations of Appendix E shall produce stresses less than the allowables from Section II, Part D , Table 4. The two equations address the forces required to seat the seal and the forces required to maintain the seal.

The force required to maintain the seal in a tight condition equals the pressure load (P_L) plus the minimum sealing load (SL). The controlling load is the load required to seat the seal.

The stress in the bolts at design conditions (Appendix E of the ASME Code requires the bolt area based on the root diameter, A_R) is:

$$\sigma_{BOLT} = \frac{P_{MIN}}{18\ (Ar)} = \frac{1.241 \cdot 10^5}{18 \cdot \left(1.41\ in^2\right)}$$

$$\sigma_{BOLT} = 4{,}890\ psi$$

This is less than the bolt allowable at design temperature (S_M @ 270°F = 11,600 psi). Therefore the value of σ_{BOLT} is acceptable, and the margin of safety is

$$MS_{BOLT} = \frac{11600}{\sigma_{BOLT}} - 1$$

$$MS_{BOLT} = +1.37$$

The force required to seat the seal is greater than the force required to maintain the seal and the allowable stresses at the time the seal is seated are greater than the allowable stresses at the design temperature, therefore, the requirement of the ASME Code, Section III, Appendix E for bolt stress during seating is met.

c) Torque calculation to maintain seal loading

Assuming the bolts are lubricated with a good grade lubricant, such as Never Seize, the variance due to the nut factor will be minimized (See [1], Table 5.1).

The variance in the applied preload can come from different sources. A suggested way of handling the variance in the preload due to the variance in torquing the bolts is set forth in [1].

Five variables are considered for determining the accuracy of the preload [1]. They are Tool Accuracy, Operator Accuracy, Control Accuracy, Short-term Relaxation and External Loads (including thermal loads).

Tool Accuracy is the accuracy the tool reports when torquing. This involves repeatability as well as variance from the set value. Table 21.2 of [1] shows values of various torquing devices. Air impact wrenches have a value of -100% to +150% which is far beyond the tolerable range that the bolts can handle. Since this will be a remote operation with a gang of torque devices – which may be run hydraulically or pneumatically – some type of accurate control will be assumed to be built in. For calculational purposes, the value of ± 3% is used (reported accuracy of the tool to be used by the buyer). Hence

$$V_{TOOL} = \pm 0.03$$

Operator Accuracy relates to the accuracy determined by the set-up, calibration and application of the remote equipment to be used. It is assumed that built-in controls and checks will provide an accuracy of ±2%. Hence

$$V_{OP} = \pm 0.02$$

Control Accuracy is defined as the accuracy of what is controlled (i.e. torque) and its ability to produce what is desired (i.e. bolt tension). This includes all the variables from the lubricants, bolt alignments, tool types and procedures. NUREG 6007 recommends a control accuracy value of ±30% be applied. Assuming the bolts are torqued several times before the closure torque is applied, the bolts are carefully lubricated and a torquing procedure is developed with the appropriate equipment which will minimize scatter, a value of ±15% is used. This value is based on what is expected by the buyer from testing similar bolts. Hence

$$V_C = \pm 0.15$$

The forth variable being considered is that of short-term relaxation. For simplicity, only the relaxation due to embedment is considered and is assumed to be 10%. Since relaxation will only reduce the preload, there is no positive scatter. Hence

$$V_{STR} = 0.00 \qquad \text{and} \qquad V_{-STR} = -0.10$$

The last variable considered is the effect of external forces such as applied loads and the effect of the joint due to the relative stiffness of the bolt to the parts being clamped. Since the jacking bolts are short and stiff relative to the joint, this variable is small. The following values are based on the results of applying an external (pressure) load to a finite element of the joint discussed in Section 12, hence

$V_{+EX} = 0.0166$ (At maximum preload, see Table 2) $V_{-EX}=0.00$

All the above variables can be combined to give the overall scatter.

For initial seating of the seal, there is no relaxation and no effects from the external loads. Therefore

$$V_{TNI} = \pm \sqrt{V_{TOOL}^2 + V_{OP}^2 + V_C^2}$$

$$V_{TNI} = \pm 0.154$$

The overall scatter of the load in the bolt and in sealing load is :

Negative scatter:

$$V_{TN} = \sqrt{V_{TOOL}^2 + V_{OP}^2 + V_C^2 + V_{STR}^2 + V_{EX}^2}$$

$$V_{TN} = -0.184$$

Positive scatter:

$$V_{TP} = \sqrt{V_{TOOL}^2 + V_{OP}^2 + V_C^2 + V_{+STR}^2 + V_{+EX}^2}$$

$$V_{TP} = 0.155$$

The nominal preload is then

$$P_{NOM} = \frac{P_{MIN}}{\left(1 - V_{TNI}\right)} = \frac{124100}{1 - .154}$$

$$P_{NOM} = 1.467 \times 10^5 \text{ lb}$$

And the maximum preload to seat the seal is

$$P_{MAX\,SS} = (P_{NOM})\,(1 + V_{TNI}) = (1.467 \times 10^5)(1+0.154)$$

$P_{MAX\ SS} = 1.693 \times 10^5$ lb.

As the friction force acts on the bolt end verses under the larger diameter of a standard bolt head, a "nut factor" of 0.117 is used.

With a nut factor F = 0.117, the nominal torque to seat the seal becomes

$$T_{NOM} = \frac{FD_B P_{NOM}}{18} = \frac{(0.117)(1.50\text{ in.})(1.467 \times 10^5\text{ lb})}{18} = 1430\text{ in-lb}$$

T_{NOM} = 120 ft-lb ± 5% (± 10 ft lb)

Conservatively using this torque as a minimum, the recommended torque is 130 ± 10 ft-lb. The maximum initial bolt torque is:

$$P_{MAX} = \frac{(18)(T_{MAX})(1+V_{TNI})}{(F)(D_B)} \quad \text{where } T_{MAX} = 130+10\text{ ft-lb}$$

$$P_{MAX} = \frac{(18)\left(\frac{12\text{ in}}{\text{ft}}\right)(140\text{ ft-lb})(1+0.154)}{(0.117)(1.50\text{ in})} = 1.99 \times 10^5\text{ lb}$$

$P_{MAX} = 2.0 \times 10^5$ lb

Maximum Bolt Load:

ANSYS runs (Section 12) were made modeling the preload as an initial interference at the bolts. Using an iterative process, the proper minimum and maximum preloads were achieved and verified by calculating the corresponding bolt stress. The minimum preload of 124,100 lb yields a bolt stress of 4,890 psi and a bolt load of 6,895 lb per bolt. The maximum preload of 200,000 lb yields a bolt stress of 7,880 psi and a bolt load of 11,111 lb per bolt. Using the results of Table 2, under service conditions of temperature and pressure, the bolt stresses for minimum and maximum preloads are 5,161 psi and 8011 psi, respectively. Therefore, the maximum bolt load is 11,296 lb per bolt.

Compressive capacity of the bolt

The allowable for all stresses in service per NB-3232.1 is $2S_M$ at 270°F [6]

$C_{BOLT} = A_S(2(11600))$

$C_{BOLT} = 3.457 \times 10^4$ lb.

The compression capacity of the shield plug under the bolt is limited to the 304L yield strength:

$C_{PLUG} = A_R(19760)$

$C_{PLUG} = 2.786 \times 10^4$ lb.

Thread Engagement

The allowable stress in the threads is governed by NB-3227.2 [6] which allow the thread stress to be equal to or less than $0.6S_M$.

If the thread engagement length $L_{TH} = 3.5$ in. then the thread capacity is:

For the internal thread:

$TH_{CI} = (As_n)(L_{TH})(0.6)(22,740)$ (F304N @270°F)

$TH_{CI} = 16.7 \times 10^4$ lb.

For the external thread:

$TH_{CE} = (As_S)(L_{TH})(0.6)(11600)$ (SA-193 @ 270°F)

$TH_{CE} = 6.261 \times 10^4$ lb.

The yield stress limit under the bolt on the shield plug controls the serviceability of the joint. Hence the margin of safety is

$$MSJOINT = \frac{19,760}{8,011} - 1 = 1.47$$

The stress area in the thinnest wall of the shell, for one bolt, due to preload (tension only) is:

$T_{WALL} = 0.373$ in = Thickness of the wall (Drawing H-2-828042)

$DT_{WALL} = 24.530$ in = Diameter at the thinnest part of shell

$$AT_{WALL} = (\pi)(DT_{WALL})\left(\frac{T_{WALL}}{18}\right) = 1.596 \text{ in}^2$$

and the stress in the thread at the thinnest part of the wall is based on the maximum bolt load:

$$\sigma_{TWALL} = \frac{11{,}296}{AT_{WALL}}$$

$$\sigma_{TWALL} = 7{,}078 \text{ psi}$$

This is less than S_M = 20,000 psi for the shell collar and therefore is acceptable. Bending and combination of stresses are addressed in the detailed model and analysis of the MCO collar and buttress thread analysis (File No. KH-8009-8-04).

11. SUMMARY

The joint and bolt are adequate to provide a minimum amount of preload required to both seat the seal and also maintain a tight seal during all loading events. The bolts meet both [6] and the Performance Specification criteria which specify that none of the joint components yield during the various conditions and that no leakage is to occur. This conclusion is based on the above calculation which takes a reasonable amount of uncertainty into consideration for the actual preloading based on torquing of the jacking bolts.

12. BOLT PRELOAD MODELING AND RESPONSE

In order to evaluate the changes in bolt and MCO closure seal loading, the two-dimensional, axisymmetric model of the MCO shell (Appendix 5, Section 12), shield plug, locking ring and bolt circle is modified to focus on the jacking bolt and seal response. The following summarizes the model details and the bolt seal response to maximum and minimum preload conditions.

12.1 Jacking Bolt / Seal Model Development

In order to meet the seal manufacturer's specifications [3], a minimum seal preload of 124,100 lb. must be applied to seat the seal. This is the minimum initial bolt preload value. Accounting for uncertainties in the preload application, the maximum preload is estimated to be 200,000 lb.

The bolt preload is applied using CONTAC12 gap elements between the bolt tip and the top of the shield plug. To achieve the desired preload, and appropriate gap element interference is iteratively selected. As a two-dimensional model , the bolts are modeled as an equivalent ring, having the same area as the 18 1-1/2 inch bolts. The stress area of the equivalent bolt is 1.49 in^2. Therefore, the area of the equivalent ring is:

$$A_{ring} = 18(1.49\ \text{in}^2) = 26.82\ \text{in}^2$$

Using a bolt circle diameter of 21.75 inches, the bolt ring thickness is:

$$T_{BR} = \frac{A_{ring}}{\pi(21.75)} = 0.393\ \text{inches}$$

A separate material is selected for the ANSYS elements to model the seal response. The HelicoFlex seal response is nonlinear, but per page 24 of the brochure [3], and the results of seal test data [2], the response is linear when near the seating load, Y_2. When unloading from the seated position, the unloading spring rate is much higher than the loading spring rate. The seal elastic spring constants for loading and for unloading are taken from the load/deflection date of the test seal [2] and are modified to reflect the MCO seal in a similar manner to those previous calculations concerning minimum seal load to maintain a tight joint and minimum seal loading to seat the seal.

Spring Rate During Initial Seating:

From force/deflection data [2]:

K_{STL} = 224,000 lb/in - deflection stiffness of test seal, loading to initial seated position.

dividing by (πD_{TS}):

$$KSTL = \frac{224000}{\pi\ (3.294)}$$ deflection stiffness per inch circumference, test seal, loading

$= 21,646$ lb/in/in

Ratio by $\sqrt{\dfrac{d_{mco}}{d_{st}}}$

$$k_{MCOL} = \left(21646\sqrt{\frac{0.186}{0.176}}\right)$$

$= 22,250$ lb/in/in

$KMCOL = k_{MCOL}(\pi)(D_{SMCO})$

$= 22,250(\pi)(23.234)$

$= 1.624 \times 10^6$ lb/in

Spring Rate during Unloading From Initial Seated Position:

From force/deflection data [2]:

$K_{STU} = 1.65 \times 10^6$ lb/in - deflection stiffness of test seal, unloading

dividing by (πD_{TS}):

$$k_{STU} = \frac{1.65 \cdot 10^6}{\pi\ (3.294)}$$ deflection stiffness per inch circumference, test seal, unloading

$= 1.5945 \times 10^5$ lb/in/in

Ratio by $\sqrt{\dfrac{d_{mco}}{d_{st}}}$

$$k_{MCOU} = 1.5945 \cdot 10^5 \cdot \sqrt{\frac{0.186}{0.176}}$$

$$= 1.639 \times 10^5 \text{ lb/in/in}$$

$$KMCOU = k_{MCOU}(\pi)(D_{SMCO})$$

$$= 1.639 \times 10^5 (\pi)(23.234)$$

$$\mathbf{= 11.96 \times 10^6 \text{ lb/in}}$$

Minimum Seal Load

The seal stop unloads when pressure is applied with the minimum preload condition. The seal area moves apart 0.0073". The seal loses loading down the unload curve.

$$\text{load loss} = (S_{seal})K_{mcov}$$

$$= (.0073)(11.96 \times 10^6)$$

$$= 87{,}308 \text{ lb}$$

$$\text{Final seal load} = 124{,}000 - 87{,}308$$

$$= 36{,}692 \text{ lb}$$

$$\text{Load/inch} = \frac{36692}{\pi\ (23.234)} := 502\ \frac{\text{lb}}{\text{in}} > 348\ \frac{\text{lb}}{\text{in}} \text{ (minimum to ensure tight seal)}$$

Therefore, the seal will remain leak-tight.

12.2 ANSYS Preload / Pressure Response

Both minimum and maximum preloads are evaluated with the ANSYS computer analysis. Two load steps are utilized for each run: 1) preload alone, and 2) preload plus design pressure of 150 psig at 270°F. The ANSYS input and output files are MINBOLT.inp & MAXBOLT.inp and MINBOLT.out & MAXBOLT.out, respectively. The bolt stress and seal load results are summarized in Table 2.

Table 2: Bolt Stress and Seal load Results

	Bolt Stress (psi)			Seal Load (lb)		
ANSYS Run	Preload	Preload +Pressure	% Change	Preload	Preload + Pressure	% Change
Minbolt	4892	5161	+5.49	132,280	129,480	-2.12
Maxbolt	7880	8011	+1.66	197,380	195,460	-0.97

The change in the maximum bolt stress due to the addition of the pressure load is consistent with the values used in determining maximum bolt stress.

13. BOLT PRELOAD UNCERTAINTY

The analysis uses five different uncertainties associated with developing the preload of the bolts/set screws by torquing. These uncertainties are used in the analysis to demonstrate some of the different parameters that influence obtaining the correct preload on the bolts. The values used are not bounding values in any sense. It is left up to the user to develop procedures and tooling that will deliver the required preload in a repetitive manner. Some of the things, other than tooling and technique, that can be done to obtain repetitive and accurate preloading is to use a good quality lubricant and procedures that get uniform and repetitive application on the bolts. Pretorquing of the bolts is also important so that the threads of both the bolts and the locking ring are slightly work hardened and any manufacturing imperfections are smoothed over so that the relationship between preload and torque is more consistent. This can easily be done by using the bolt and locking ring of each individual assembly in the hydrostatic testing of the unit rather than a test assembly.

It is highly recommended that a test program be undertaken to develop the relationship between torque and preload for the specific lubricant, equipment, procedures, and environment for the MCO. A basic program will minimize the uncertainty and potential problems when the units are put into production. The test program will also help in qualifying the seals by ensuring the proper preload, since the seals are not to be tested during production.

APPENDIX A:

Computer Run Output Sheets

&

Input File Listings

COMPUTER RUN COVER SHEET

Project Number:	KH-8009-8
Computer Code:	ANSYS®-PC
Software Version:	5.3
Computer System:	Windows 95, Pentium® Processor
Computer Run File Number:	KH-8009-8-02
Unique Computer Run Filename:	MINBOLT.inp
Run Description:	Analysis of MCO Closure Response, Minimum Bolt Load.
Creation Date / Time:	18 November 1998 2:09:52 PM

Prepared By: Zachary G. Sargent 2/4/99 Date

Checked By: Henry S. Averette 2/4/99 Date

REVISION	0	1	2		PAGE 24 OF 55
PREPARED BY / DATE	CJT 04/17/9	HSA 7/14/98	ZGS 02/04/99		
CHECKED BY / DATE	BW 04/17/97	ZGS 7/14/98	HSA 02/04/99		

LISTING OF MINBOLT.INP FILE

```
/BATCH,LIST
/FILENAM,minbolt
/PREP7
/TITLE,MCO DESIGN- 132 DEGREES C, 150 psi PRESSURE,

TREF,70
TUNIF,270
ETAN=0.05              ! Tangent modulus

/COM **** ELEMENT TYPES ****
ET,1,42,,,1            ! Shell
ET,2,42,,,1            ! Shield Plug
ET,3,42,,,1            ! Lifting & Locking Ring
ET,4,12               ! Gap Elements Between Shield Plug & Shell
KEYOPT,4,7,1
ET,5,42,,,1            ! Bolt

/COM **** REAL CONSTANTS FOR GAP ELEMENTS ****
R,4,-90,1.0e9,-0.06,3.0     ! Shell/Shield Plug, Initially Open .06"
R,5,0,1.0e9,.007562          ! Gap Elements Under Bolt, Min. Preload Interference
R,6,0,1.0e9,-.009,2.0       ! Sealing Stop, initially open, gap adjusted for max. stiffness
R,7,0,1.0e9,0,1.0          ! Bottom MCO Plate, closed
r,8,0,2.42e7,,2.0          ! Seal Spring, max. stiffness (unloading stiffness)

/COM ************* MATERIAL PROPERTIES *************
MP,DENS,1,490/1728          ! 304, 304L & 304N SS
MP,NUXY,1,0.3

MP,DENS,5,490/1728          ! SA193 Grade B8M
MP,NUXY,5,0.3

/COM **** DEFINING TEMPERATURES FOR MPDATA ****
MPTEMP,1, 70,100,200,300

/COM **** DEFINING ELASTIC MODULI FOR 304, 304L, 304N & SA-193 ****
MPDATA,EX,1,1,28.3e+06,28.1e+06,27.6e+06,27.0e+06

/COM                  ! SA-193
MPDATA,EX,5,1,28.3e+06,28.1e+06,27.6e+06,27.0e+06,

/COM **** INSTANTANEOUS COEFFICIENTS OF THERMAL EXPANSION, 304, 304L, 304N & SA-193 ****
MPDATA,ALPX,1,1,8.46e-06,8.63e-06,9.08e-06,9.46e-06

/COM                  ! SA-193
MPDATA,ALPX,5,1,8.42e-06,8.59e-06,9.09e-06,9.56e-06


/COM ************* SHELL GEOMETRY ****************
IR=11.5             ! Internal Shell Radius @ Bottom
OR=12.000             ! Shell Outside Radius @ Bottom
IR2 = 12.02           ! Inside Radius at Collar Sealing Surface
OR2 = 12.625           ! Outside Radius at Collar Sealing Surface
```

```
IR3 = 12.25              ! Inside Radius at Collar-Lifting Ring Weld

/COM **** BOTTOM COVER PLATE  [DWG SK-2-300378] ****
N,1,,-1.32                 ! Row 1
N,2,1.25,-1.32
N,3,2.13,-1.32
N,10,11.423,-1.32
FILL

N,41,0.00,-0.44          ! Row 3
N,42,1.25,-0.44
N,43,2.13,0.44
N,50,IR,0.44
FILL,43,50
N,52,OR,0.44
FILL,50,52

FILL,1,41,1,21,1,10         ! Middle Row
FILL,10,50,1,30
N,32,12,-0.32
FILL,30,32
FILL,10,32,1,11
N,53,IR,1.17
N,55,OR,1.17              ! Shell Stub/Weld
FILL,53,55

/COM **** SHELL [DWGS SK-2-300379 & SK-2-300461] ****
N,65,IR,6.68
N,67,OR,6.68
FILL
FILL,53,65,3,,3,3,1

/COM **** SINGLE ROW SHELL ****
N,100,IR,7.18             ! Inside
N,140,IR,71.68
N,180,IR,136.68

N,101,OR,7.18              ! Outside
N,141,OR,71.68
N,181,OR,136.68
FILL,100,140,20,,2,2,1,2.0
FILL,140,180,19,,2,2,1,.5

/COM **** DOUBLE ROW SHELL ****
N,190,IR,137.18            ! Transition to Double Row
N,192,OR,137.18
FILL

/COM **** BASE OF CASK THROAT–ELEVATION: 138 INCHES ****
N,217,IR,142.68             ! Transition to Double Row
N,219,OR,142.68
FILL
FILL,190,217,8,,3,3,1       ! Vertical Fill

/COM **** BOTTOM OF COLLAR TRANSITION ****
N,235,IR,146.06             ! Start of Transition to Large O.D &
```

```
N,237,OR,146.06            ! Assumed Location of Shield Plug Taper
FILL
N,238,IR,146.68
N,240,OR,146.68
FILL                 ! Horizontal Fill
FILL,217,235,5,,3,3,1        ! Vertical Fill

/COM **** TOP OF COLLAR TRANSITION ****
N,241,IR,147.31           ! End of Transition to Large O.D &
N,243,OR,147.31            ! Assumed Location of Shield Plug Taper
FILL                 ! Horizontal Fill
NGEN,2,3,241,243,1,,0.75

/COM **** COLLAR SEALING SURFACE ****
N,247,IR,149.63           ! Inside Radius of Sealing Surface
N,249,IR2,149.63           ! Outside Radius at Sealing Surface
FILL                 ! Horizontal Fill

/COM **** THICK WALL AT COLLAR TRANSITION ****
NGEN,2,10,240,249,3         ! Nodes 250-259 Coincident w/240-249 (by 3)
N,255,OR2,147.31           ! Outside Surface
N,261,OR2,149.63           ! Outside Surface
N,258,OR2,148.06
N,980,IR,149.38
N,981,11.755,149.38
N,982,IR2,149.38
N,983,12.317,149.38
N,984,OR2,149.38
N,990,OR2,146.68
FILL,240,990,1,251
NGEN,2,5,980,984,1,,-0.66
FILL,246,258,1,257
FILL,253,255,1,,1,3,3
FILL,237,990,1,991

/COM **** COLLAR AT BOTTOM EDGE OF PLUG (.155" above Sealing Surface) ****
NGEN,2,3,259,,,,0.245        ! Nodes 262

/COM **** COLLAR AT TOP EDGE OF PLUG (2" above bottom Edge) ****
NGEN,2,9,262,,,,2.00        ! Nodes 271
FILL,262,271,2

/COM **** COLLAR AT BASE OF THREADS ****
N,274,IR3,152.00
N,1000,IR2,152.00

/COM **** TOP TO COLLAR (WELD CLOSURE) ****
N,295,IR3,156.00
FILL,274,295
NGEN,3,1,259,295,3,(OR2-IR2)/2
NGEN,3,1,274,295,3,(OR2-IR3)/2

/COM ************* LOCKING & LIFTING RING GEOMETRY *************
RING1=7.94
RING2=9.375
RING3=9.625
```

```
RING4=10.19
RING5=12.23
LOCAL,11,0,,152.00          ! Local System z=0 at Base of Ring
CSYS,11

/COM **** TOP EDGE ****
N,401,RING1,6.13
CSYS,O
N,404,9.375,158.13
FILL,401,404,,,1
N,406,RING4,158.13
FILL,404,406,,,1          ! Top Edge

/COM **** LIFTING SURFACE ****
CSYS,11
N,421,RING1,5.13
N,424,RING2,5.13
FILL,421,424
N,426,RING4,5.13
FILL,424,426
FILL,401,421,1,,10,6,1
N,431,RING1,6.13-1.56
N,434,RING2,6.13-1.56
FILL

/COM **** BOLTING SURFACE ****
N,441,RING1,4
N,444,RING3,4
FILL
N,445,10.875-.197,4          ! Inside Edge of Bolt Hole
N,447,10.875+.197,4          ! Outside Edge of Bolt Hole
FILL
N,910,10.875-.197,4
N,911,10.9375+.197,4
N,448,RING5,4              ! O.D of Ring
CSYS,0                   ! Bolt Extension
N,924,10.875-.197,152.00          ! Double Nodes @ Bolt for Gap elements
N,925,10.875+.197,152.00
FILL,910,924,6,,2
FILL,911,925,6,,2
N,525,10.875-.197,151.874          ! Bottom of Bolt Extension
N,527,10.875+.197,151.874
FILL

/COM **** BOTTOM OF LIFTING/LOCKING RING ****
CSYS,11
NGEN,2,70,441,448,1,,-4          ! Bottom Surface of Lifting/Locking Ring
FILL,441,511,6,,10,8,1          ! Fill in Lifting/Locking Ring

/COM ************* SHIELD PLUG (offset y by 158.25) *************
LOCAL,20,0,,158.13
TYPE,2
PLUGR1=11.975
PLUGR2=11.45
PLUGR3=11.25
PLUGR4=7.89
```

```
/COM **** NODES AT PLUG AXIS (r=0) ****
N,601
N,602,0,-1
N,603,0,-1.994
N,606,0,-4.994
FILL,603,606,2,604
N,607,0,-6.25
N,610,0,-8.25
FILL,607,610,2,608
N,611,0,-8.75
N,613,0,-10.5
FILL,611,613

/COM **** NODAL GENERATION ****
NGEN,2,20,601,613,1,0.8825
NGEN,2,20,621,633,1,0.8825            ! Id Large Opening
NGEN,2,20,642,653,1,0.6875
NGEN,2,20,662,673,1,0.6875           ! Id Medium Opening
NGEN,2,20,683,693,1,0.4235           ! Id Small Opening
NGEN,2,10,706,713,1,0.9515           ! Center of Opening

N,730,5.4665,-1.994               ! Od Small Opening
N,736,5.4665,-4.994
FILL,730,736,5,731
N,737,5.4665,-6.25
N,740,5.4665,-8.25
FILL,737,740,2,738
N,741,5.4665,-8.75
N,743,5.4665,-10.5
FILL,741,743
N,748,5.89,-1.0
NGEN,2,20,730,743,1,0.4235
FILL,748,750
N,766,7.265,0
NGEN,2,20,748,763,1,1.375
FILL,766,768
NGEN,3,20,766,768,1,0.3125
N,789,7.5775,-1.56
N,796,7.5775,-5.56
FILL,789,796,6
NGEN,2,20,789,796,1,0.3125
NGEN,3,20,777,783,1,0.3125

/COM **** UNDER LOCKING RING ****
N,824,8.5017,-6.25
N,827,8.5017,-8.25
FILL
N,828,8.5017,-8.75
N,830,8.5017,-10.5
FILL
NGEN,3,7,824,830,1,0.5616
NGEN,2,7,838,844,1,0.625
NGEN,2,7,845,851,1,0.625       ! Under Bolt
N,859,10.875+.197,-6.25
N,860,10.875+.197,-6.917
```

```
N,861,10.875+.197,-7.584
N,862,PLUGR2,-8.25
N,863,PLUGR2,-8.75
N,865,PLUGR3,-10.5
FILL,863,865,1
N,866,PLUGR1-0.288,-6.25
N,869,PLUGR1-0.288,-8.25
FILL,866,869,2
N,870,PLUGR1-0.288,-8.476
NGEN,2,5,866,870,1,0.288

/COM **** REFINING LIFTING EAR ****
CSYS,0
N,877,9.53,158.13
N,889,9.53,157.63
N,901,9.53,157.13
FILL,403,404,1,876,1
FILL,413,414,1,888,1
FILL,423,424,1,900,1
FILL,877,405,1,878
FILL,405,406,2,879,1
FILL,889,415,1,890
FILL,415,416,2,891,1
FILL,404,414,1,881
FILL,877,889,1,882
FILL,878,890,1,883
FILL,405,415,1,884
FILL,879,891,1,885
FILL,880,892,1,886
FILL,406,416,1,887
FILL,889,901,1,894
FILL,414,424,1,893
FILL,901,425,1,902
FILL,890,902,1,895
FILL,415,425,1,896
FILL,425,426,2,903,1
FILL,891,903,1,897
FILL,892,904,1,898
FILL,416,426,1,899
FILL,424,434,1,907
FILL,433,434,1,908,1
FILL,423,433,1,905
FILL,905,907


/COM **** FILTER GUARD PLATE ****
PLATE1=0.273
PLATE2=0.6575
PLATE3=1.357
PLATE4=10.25
PLATE5=11.25

N,1200,PLATE4,146.78
N,1202,PLATE5,146.78
FILL
NGEN,5,3,1200,1202,,,-0.85
```

```
NGEN,2,3,1212,1214,,,-0.25
N,1221,PLATE4,141.88
N,1222,10.75,141.88
N,1223,10.915,141.88
FILL,1215,1221,1,1218
FILL,1223,1217,1,1220
FILL,1216,1222,1,1219
N,1237,6.4375,143.38
FILL,1212,1237,3,1225,4
N,1249,3.578,143.38
FILL,1237,1249,2,1241,4
NGEN,2,1,1225,1249,4,,-0.25
NGEN,2,2,1226,1250,4,,-1.25
FILL,1226,1228,1,1227,,7,4
N,1253,2.625,145.255
N,1254,2.625,145.005
N,1256,2.625,143.38
FILL,1254,1256
N,1257,2.625,143.13
N,1259,2.625,141.88
FILL,1257,1259
NGEN,2,10,1253,1259,1,-0.5
NGEN,2,10,1263,1269,1,-0.768
N,1283,0.6575,145.255
N,1284,0.6575,145.005
N,1260,2.125,147.63
N,1270,1.357,147.63
N,1280,0.6575,147.63
N,1290,0.273,147.63
NGEN,3,1,1260,1290,10,,-0.5625

/COM **** NODES AT BOTTOM GAP ELEMENTS ****
NGEN,2,2000,1,10,1,,-1.00


/COM **** COUPLING NODES ****
/COM **** BETWEEN LIFTING/LOCKING RING & SHELL ****
CP,1,UY,508,277           ! Start Threads
CP,2,UY,498,280
CP,3,UY,488,283
CP,4,UY,478,286
CP,5,UY,468,289
CP,6,UY,458,292

/COM **** BETWEEN BOLT & LOCKING RING ****
CP,7,UY,445,910
CP,8,UX,445,910
CP,9,UY,447,911
CP,10,UX,447,911
*DO,I,1,7
CP,10+I,UY,445+10*I,910+2*I
*ENDDO
*DO,I,1,7
CP,17+I,UY,447+10*I,911+2*I
*ENDDO
*DO,I,1,7
```

```
CP,24+I,UX,445+10*I,910+2*I
*ENDDO
*DO,I,1,7
CP,31+I,UX,447+10*I,911+2*I
*ENDDO
NALL
EALL

/COM **** ELEMENT GENERATION FOR SHELL ****
TYPE,1
MAT,1

/COM **** BOTTOM OF SHELL ****
E,1,2,22,21
E,2,3,23,22
EGEN,8,1,-1
E,10,11,30
E,21,22,42,41
E,22,23,43,42
EGEN,10,1,-1
E,11,31,30
E,11,32,31

/COM **** SHELL ****
E,50,51,54,53
EGEN,2,1,-1
EGEN,5,3,-2

/COM **** FIRST TRANSITION ELEMENTS ****
E,65,66,100
E,100,66,101
E,67,101,66

/COM **** SINGLE SHELL ****
E,100,101,103,102
EGEN,40,2,-1

/COM **** SECOND TRANSITION ELEMENTS ****
E,190,180,191
E,180,181,191
E,181,192,191

/COM **** TOP SHELL (DOUBLE ELEMENT) ****
E,190,191,194,193
EGEN,2,1,-1
EGEN,7,3,-2

/COM **** BOTTOM OF COLLAR ****
TYPE,1
MAT,1
E,211,212,215,214
EGEN,2,1,-1
EGEN,11,3,-2
E,244,245,986,985
EGEN,2,1,-1
E,256,257,988,987
```

```
E,257,258,989,988
E,985,986,981,980
EGEN,4,1,-1
E,980,981,248,247
EGEN,2,1,-1
E,982,983,260,249
E,983,984,261,260

/COM **** COLLAR TRANSITION & THREADED REGIONS ****
E,237,991,251,240
E,991,990,251
E,240,251,254,253
E,251,990,255,254
E,253,254,257,256
EGEN,2,1,-1
E,259,260,263,262
EGEN,2,1,-1
EGEN,12,3,-2
E,271,274,1000

/COM **** MERGE COINCIDENT NODES FOR SHELL ****
ESEL,S,TYPE,,1
NSLE
NUMMRG,NODE,
EALL
NALL
/COM **** END OF SHELL/COLLAR ELEMENT GENERATION ****

/COM **** LOCKING/LIFTING RING ELEMENTS ****
TYPE,3
MAT,1
E,411,412,402,401
EGEN,2,1,-1
EGEN,2,10,-2
E,413,888,876,403
E,881,404,876
E,888,881,876
E,888,414,881
E,881,882,877,404
E,414,889,882,881
E,882,883,878,877
E,889,890,883,882
E,883,884,405,878
E,890,415,884,883
E,884,885,879,405
E,415,891,885,884
E,885,886,880,879
E,891,892,886,885
E,886,887,406,880
E,892,416,887,886
E,423,900,888,413
E,893,414,888
E,900,893,888
E,900,424,893
E,893,894,889,414
E,424,901,894,893
```

```
E,894,895,890,889
E,901,902,895,894
E,895,896,415,890
E,902,425,896,895
E,896,897,891,415
E,425,903,897,896
E,897,898,892,891
E,903,904,898,897
E,898,899,416,892
E,904,426,899,898
E,431,432,422,421
E,905,423,422
E,432,905,422
E,432,433,905
E,905,906,900,423
E,433,908,906,905
E,906,907,424,900
E,908,434,907,906
E,441,442,432,431
EGEN,2,1,-1
E,443,908,433
E,443,444,434,908
E,451,452,442,441
EGEN,3,1,-1
EGEN,7,10,-3
E,454,912,910,444
E,464,914,912,454
E,474,916,914,464
E,484,918,916,474
E,494,920,918,484
E,504,922,920,494
E,514,924,922,504
E,458,448,911,913
E,468,458,913,915
E,478,468,915,917
E,488,478,917,919
E,498,488,919,921
E,508,498,921,923
E,518,508,923,925

/COM **** BOLT ****
TYPE,5
MAT,5
E,455,456,446,445
EGEN,8,10,-1
E,456,457,447,446
EGEN,8,10,-1
/COM ************* END OF LOCKING/LIFTING RING *************

/COM **** SHIELD PLUG ELEMENTS ****
TYPE,2
MAT,1
E,602,622,621,601
EGEN,11,1,-1
EGEN,2,20,-11
E,613,1290,612
```

```
E,1290,1280,632,612
E,1280,633,632
E,633,1270,632
E,1270,652,632
E,1270,653,652
E,643,663,662,642
EGEN,10,1,-1
EGEN,2,20,-10
E,673,693,692,672
EGEN,2,20,-10
E,653,1260,652
E,1260,672,652
E,1260,673,672
E,707,717,716,706
EGEN,7,1,-1
E,717,737,736,716
EGEN,7,1,-1
E,731,751,750,730
EGEN,13,1,-1
E,749,769,768,748
EGEN,15,1,-1
E,767,787,786,766
EGEN,17,1,-1
EGEN,2,20,-17
E,818,825,824,817
EGEN,6,1,-1
EGEN,5,7,-6
E,853,860,859,852
EGEN,6,1,-1
E,860,867,866,859
EGEN,3,1,-1
E,867,872,871,866
EGEN,4,1,-1
/COM ************* END OF SHIELD PLUG *************

/COM ************* FILTER GUARD PLATE *************
E,1200,1201,858,851
E,1201,1202,865,858
E,1203,1204,1201,1200
EGEN,2,1,-1
EGEN,6,3,-2
E,1221,1222,1219,1218
E,1222,1223,1220,1219
E,1226,1215,1212,1225
E,1227,1218,1215,1226
E,1228,1221,1218,1227
E,1230,1226,1225,1229
EGEN,3,1,-1
EGEN,6,4,-3
E,1257,1250,1249,1256
EGEN,3,1,-1
E,1264,1254,1253,1263
EGEN,6,1,-1
E,1271,1261,1260,1270
EGEN,9,1,-1
E,1281,1271,1270,1280
```

```
EGEN,4,1,-1
E,1291,1281,1280,1290
EGEN,2,1,-1

/COM ************* CONTACT ELEMENTS *************
/COM **** BETWEEN LOCKING RING & SHIELD PLUG ****
TYPE,4
REAL,4
E,806,401
E,807,411
E,808,421
E,809,431
E,810,441
E,811,451
E,812,461
E,813,471
E,814,481
E,815,491
E,816,501
E,817,511

/COM **** BETWEEN SHIELD PLUG & BOTTOM OF BOLT
REAL,5
N,3000,10.875-.197,151.88
E,3000,525
E,852,526
E,859,527

/COM **** BETWEEN SHIELD PLUG & SHELL (ABOVE SEAL)
REAL,4
E,271,871
E,268,872
E,265,873
E,262,874

/COM **** BETWEEN SHIELD PLUG & SHELL (BELOW SEAL)
E,863,980

/COM **** BETWEEN SHIELD PLUG AND SEAL LIP
TYPE,4
REAL,6
E,248,870
E,249,875

/COM **** BOTTOM GAP ELEMENTS
TYPE,4
REAL,7
E,2001,1
EGEN,10,1,-1
NALL
EALL
/COM ************* END GAP ELEMENTS *************

/COM ************* BOUNDARY CONDITIONS *************
CSYS,0
NSEL,S,LOC,X,0
```

```
NSEL,R,LOC,Y,-1.33,158.14
D,ALL,UX,0
NALL
EALL
NSEL,S,NODE,,2001,2010
D,ALL,ALL,0
EALL
NALL

/COM **** FINE TUNE SEAL & BOLT REGIONS ****
NMODIF,869,11.72,149.88
NMODIF,870,11.72,149.65
TYPE,2
EMODIF,420,1,3000,846,853,852
E,845,846,3000,3000
TYPE,4
REAL,8
E,248,869                                   ! seal spring
FINI


/COM ***************        SOLUTION PHASE        *************
/SOLUTION
TIME,1                        ! bolt preload only
LSWRITE,1


TIME,2                          ! Preload + Pressure

/COM **** 150 PSI INTERNAL PRESSURE ****
NSEL,S,LOC,X,0,1.26          ! Bottom Plate
NSEL,R,LOC,Y,-0.45,-0.43
SF,ALL,PRES,150
NALL
EALL
NSEL,S,LOC,X,1.24,2.14
NSEL,R,LOC,Y,-0.45,0.45
SF,ALL,PRES,150
NALL
EALL
NSEL,S,LOC,X,2.12,11.51
SF,ALL,PRES,150
NALL
EALL
NSEL,S,LOC,X,11.49,11.51       ! Inside Shell
NSEL,R,LOC,Y,0.43,149.64
SF,ALL,PRES,150
NALL
EALL
NSEL,S,LOC,X,11.49,11.76       ! Edge Shell to Seal
NSEL,R,LOC,Y,149.62,149.64
SF,ALL,PRES,150
NALL
EALL
NSEL,S,LOC,X,11.67,11.69       ! Seal
NSEL,R,LOC,Y,149.64,149.89
```

```
SF,ALL,PRES,150
NALL
EALL
NSEL,S,LOC,X,11.44,11.69       ! Shield Plug (above seal)
NSEL,R,LOC,Y,149.87,149.89
SF,ALL,PRES,150
NALL
EALL
NSEL,S,LOC,X,11.44,11.46       ! Side of Shield Plug
NSEL,R,LOC,Y,149.37,149.89
SF,ALL,PRES,150
NALL
EALL
NSEL,S,LOC,X,11.24,11.46       ! Shield Plug Taper
NSEL,R,LOC,Y,147.62,149.39
SF,ALL,PRES,150
NALL
NSEL,S,LOC,X,11.24,11.26       ! Guard Plate Ring
NSEL,R,LOC,Y,143.12,147.64
NALL
EALL
NSEL,S,LOC,X,10.914,11.26       ! Guard Plate Taper
NSEL,R,LOC,Y,141.87,143.14
SF,ALL,PRES,150
NALL
EALL
NSEL,S,LOC,X,1.34,10.92        ! Guard Plate Bottom
NSEL,R,LOC,Y,141.87,141.89
SF,ALL,PRES,150
NALL
EALL
LSWRITE,2
LSSOLVE,1,2
FINI

/POST1              ! Obtain Bolt/Seal Response
SET,1
LPATH,525,527          ! Bolt Cross Section
PRSECT
LPATH,870,875          ! Seal Stop Cross Section
PRSECT
ETABLE,FORCE,SMISC,1    ! Seal Normal Force
ESEL,S,REAL,,8
PRETAB
EALL
SET,2
LPATH,525,527          ! Bolt Cross Section
PRSECT
LPATH,870,875          ! Seal Stop Cross Section
PRSECT
ETABLE,FORCE,SMISC,1    ! Seal Normal Force
ESEL,S,REAL,,8
PRETAB
FINI
/EXIT
```

COMPUTER RUN COVER SHEET

Project Number:	KH-8009-8
Computer Code:	ANSYS®-PC
Software Version:	5.3
Computer System:	Windows 95, Pentium® Processor
Computer Run File Number:	KH-8009-8-02
Unique Computer Run Filename:	MINBOLT.out
Run Description:	Analysis of MCO Closure Response, Minimum Bolt Load.
Run Date / Time:	24 November 1998 7:22:56 PM

Prepared By: Zachary G. Sargent 2/4/99
Date

Checked By: Henry S. Averette 2/4/99
Date

REVISION	0	1	2		**PAGE 39** **OF 55**
PREPARED BY / DATE	CJT 04/17/9	HSA 7/14/98	02/04/99		
CHECKED BY / DATE	BW 04/17/97	ZGS 7/14/98	02/04/99		

COMPUTER RUN COVER SHEET

Project Number:	KH-8009-8
Computer Code:	ANSYS®-PC
Software Version:	5.3
Computer System:	Windows 95, Pentium® Processor
Computer Run File Number:	KH-8009-8-02
Unique Computer Run Filename:	MXBOLT.inp
Run Description:	Analysis of MCO Closure Response, Maximum Bolt Load.
Creation Date / Time:	24 November 1998 7:26:19 PM

2/4/99
Prepared By: Zachary G. Sargent Date

2/4/99
Checked By: Henry S. Averette Date

LISTING OF MAXBOLT.INP FILE

```
/BATCH,LIST
/FILENAM,maxbolt
/PREP7
/TITLE,MCO DESIGN- 132 DEGREES C, 150 psi PRESSURE,

TREF,70
TUNIF,270
ETAN=0.05              ! Tangent modulus

/COM **** ELEMENT TYPES ****
ET,1,42,,,1            ! Shell
ET,2,42,,,1            ! Shield Plug
ET,3,42,,,1            ! Lifting & Locking Ring
ET,4,12                ! Gap Elements Between Shield Plug & Shell
KEYOPT,4,7,1
ET,5,42,,,1            ! Bolt

/COM **** REAL CONSTANTS FOR GAP ELEMENTS ****
R,4,-90,1.0e9,-0.06,3.0      ! Shell/Shield Plug, Initially Open .06"
R,5,0,1.0e9,.011242            ! Gap Elements Under Bolt, Min. Preload Interference
R,6,0,1.0e9,-.009,2.0        ! Sealing Stop, initially open, gap adjusted for max. stiffness
R,7,0,1.0e9,0,1.0          ! Bottom MCO Plate, closed
r,8,0,2.42e7,,2.0          ! Seal Spring, max. stiffness (unloading stiffness)

/COM ************* MATERIAL PROPERTIES *************
MP,DENS,1,490/1728          ! 304, 304L & 304N SS
MP,NUXY,1,0.3

MP,DENS,5,490/1728          ! SA193 Grade B8M
MP,NUXY,5,0.3

/COM **** DEFINING TEMPERATURES FOR MPDATA ****
MPTEMP,1, 70,100,200,300

/COM **** DEFINING ELASTIC MODULI FOR 304, 304L, 304N & SA-193 ****
MPDATA,EX,1,1,28.3e+06,28.1e+06,27.6e+06,27.0e+06

/COM                   ! SA-193
MPDATA,EX,5,1,28.3e+06,28.1e+06,27.6e+06,27.0e+06,

/COM **** INSTANTANEOUS COEFFICIENTS OF THERMAL EXPANSION, 304, 304L, 304N & SA-193 ****
MPDATA,ALPX,1,1,8.46e-06,8.63e-06,9.08e-06,9.46e-06

/COM                   ! SA-193
MPDATA,ALPX,5,1,8.42e-06,8.59e-06,9.09e-06,9.56e-06


/COM ************* SHELL GEOMETRY ****************
IR=11.5              ! Internal Shell Radius @ Bottom
OR=12.000              ! Shell Outside Radius @ Bottom
IR2 = 12.02            ! Inside Radius at Collar Sealing Surface
OR2 = 12.625             ! Outside Radius at Collar Sealing Surface
```

```
IR3 = 12.25                 ! Inside Radius at Collar-Lifting Ring Weld

/COM **** BOTTOM COVER PLATE   [DWG SK-2-300378] ****
N,1,,-1.32                  ! Row 1
N,2,1.25,-1.32
N,3,2.13,-1.32
N,10,11.423,-1.32
FILL

N,41,0.00,-0.44             ! Row 3
N,42,1.25,-0.44
N,43,2.13,0.44
N,50,IR,0.44
FILL,43,50
N,52,OR,0.44
FILL,50,52

FILL,1,41,1,21,1,10         ! Middle Row
FILL,10,50,1,30
N,32,12,-0.32
FILL,30,32
FILL,10,32,1,11
N,53,IR,1.17
N,55,OR,1.17                ! Shell Stub/Weld
FILL,53,55

/COM **** SHELL [DWGS SK-2-300379 & SK-2-300461] ****
N,65,IR,6.68
N,67,OR,6.68
FILL
FILL,53,65,3,,3,3,1

/COM **** SINGLE ROW SHELL ****
N,100,IR,7.18               ! Inside
N,140,IR,71.68
N,180,IR,136.68

N,101,OR,7.18               ! Outside
N,141,OR,71.68
N,181,OR,136.68
FILL,100,140,20,,2,2,1,2.0
FILL,140,180,19,,2,2,1,.5

/COM **** DOUBLE ROW SHELL ****
N,190,IR,137.18             ! Transition to Double Row
N,192,OR,137.18
FILL

/COM **** BASE OF CASK THROAT--ELEVATION: 138 INCHES ****
N,217,IR,142.68             ! Transition to Double Row
N,219,OR,142.68
FILL
FILL,190,217,8,,3,3,1       ! Vertical Fill

/COM **** BOTTOM OF COLLAR TRANSITION ****
N,235,IR,146.06             ! Start of Transition to Large O.D &
```

```
N,237,OR,146.06             ! Assumed Location of Shield Plug Taper
FILL
N,238,IR,146.68
N,240,OR,146.68
FILL                 ! Horizontal Fill
FILL,217,235,5,,3,3,1       ! Vertical Fill

/COM **** TOP OF COLLAR TRANSITION ****
N,241,IR,147.31             ! End of Transition to Large O.D &
N,243,OR,147.31              ! Assumed Location of Shield Plug Taper
FILL                 ! Horizontal Fill
NGEN,2,3,241,243,1,,0.75

/COM **** COLLAR SEALING SURFACE ****
N,247,IR,149.63             ! Inside Radius of Sealing Surface
N,249,IR2,149.63             ! Outside Radius at Sealing Surface
FILL                 ! Horizontal Fill

/COM **** THICK WALL AT COLLAR TRANSITION ****
NGEN,2,10,240,249,3           ! Nodes 250-259 Coincident w/240-249 (by 3)
N,255,OR2,147.31            ! Outside Surface
N,261,OR2,149.63            ! Outside Surface
N,258,OR2,148.06
N,980,IR,149.38
N,981,11.755,149.38
N,982,IR2,149.38
N,983,12.317,149.38
N,984,OR2,149.38
N,990,OR2,146.68
FILL,240,990,1,251
NGEN,2,5,980,984,1,,-0.66
FILL,246,258,1,257
FILL,253,255,1,,1,3,3
FILL,237,990,1,991

/COM **** COLLAR AT BOTTOM EDGE OF PLUG (.155" above Sealing Surface) ****
NGEN,2,3,259,,,,0.245         ! Nodes 262

/COM **** COLLAR AT TOP EDGE OF PLUG (2" above bottom Edge) ****
NGEN,2,9,262,,,,2.00         ! Nodes 271
FILL,262,271,2

/COM **** COLLAR AT BASE OF THREADS ****
N,274,IR3,152.00
N,1000,IR2,152.00

/COM **** TOP TO COLLAR (WELD CLOSURE) ****
N,295,IR3,156.00
FILL,274,295
NGEN,3,1,259,295,3,(OR2-IR2)/2
NGEN,3,1,274,295,3,(OR2-IR3)/2

/COM ************* LOCKING & LIFTING RING GEOMETRY *************
RING1=7.94
RING2=9.375
RING3=9.625
```

```
RING4=10.19
RING5=12.23
LOCAL,11,0,,152.00          ! Local System z=0 at Base of Ring
CSYS,11

/COM **** TOP EDGE ****
N,401,RING1,6.13
CSYS,O
N,404,9.375,158.13
FILL,401,404,,,1
N,406,RING4,158.13
FILL,404,406,,,1          ! Top Edge

/COM **** LIFTING SURFACE ****
CSYS,11
N,421,RING1,5.13
N,424,RING2,5.13
FILL,421,424
N,426,RING4,5.13
FILL,424,426
FILL,401,421,1,,10,6,1
N,431,RING1,6.13-1.56
N,434,RING2,6.13-1.56
FILL

/COM **** BOLTING SURFACE ****
N,441,RING1,4
N,444,RING3,4
FILL
N,445,10.875-.197,4        ! Inside Edge of Bolt Hole
N,447,10.875+.197,4         ! Outside Edge of Bolt Hole
FILL
N,910,10.875-.197,4
N,911,10.9375+.197,4
N,448,RING5,4              ! O.D of Ring
CSYS,0                   ! Bolt Extension
N,924,10.875-.197,152.00         ! Double Nodes @ Bolt for Gap elements
N,925,10.875+.197,152.00
FILL,910,924,6,,2
FILL,911,925,6,,2
N,525,10.875-.197,151.874         ! Bottom of Bolt Extension
N,527,10.875+.197,151.874
FILL

/COM **** BOTTOM OF LIFTING/LOCKING RING ****
CSYS,11
NGEN,2,70,441,448,1,,-4       ! Bottom Surface of Lifting/Locking Ring
FILL,441,511,6,,10,8,1       ! Fill in Lifting/Locking Ring

/COM ************* SHIELD PLUG (offset y by 158.25) *************
LOCAL,20,0,,158.13
TYPE,2
PLUGR1=11.975
PLUGR2=11.45
PLUGR3=11.25
PLUGR4=7.89
```

```
/COM **** NODES AT PLUG AXIS (r=0) ****
N,601
N,602,0,-1
N,603,0,-1.994
N,606,0,-4.994
FILL,603,606,2,604
N,607,0,-6.25
N,610,0,-8.25
FILL,607,610,2,608
N,611,0,-8.75
N,613,0,-10.5
FILL,611,613

/COM **** NODAL GENERATION ****
NGEN,2,20,601,613,1,0.8825
NGEN,2,20,621,633,1,0.8825          ! Id Large Opening
NGEN,2,20,642,653,1,0.6875
NGEN,2,20,662,673,1,0.6875          ! Id Medium Opening
NGEN,2,20,683,693,1,0.4235          ! Id Small Opening
NGEN,2,10,706,713,1,0.9515          ! Center of Opening

N,730,5.4665,-1.994             ! Od Small Opening
N,736,5.4665,-4.994
FILL,730,736,5,731
N,737,5.4665,-6.25
N,740,5.4665,-8.25
FILL,737,740,2,738
N,741,5.4665,-8.75
N,743,5.4665,-10.5
FILL,741,743
N,748,5.89,-1.0
NGEN,2,20,730,743,1,0.4235
FILL,748,750
N,766,7.265,0
NGEN,2,20,748,763,1,1.375
FILL,766,768
NGEN,3,20,766,768,1,0.3125
N,789,7.5775,-1.56
N,796,7.5775,-5.56
FILL,789,796,6
NGEN,2,20,789,796,1,0.3125
NGEN,3,20,777,783,1,0.3125

/COM **** UNDER LOCKING RING ****
N,824,8.5017,-6.25
N,827,8.5017,-8.25
FILL
N,828,8.5017,-8.75
N,830,8.5017,-10.5
FILL
NGEN,3,7,824,830,1,0.5616
NGEN,2,7,838,844,1,0.625
NGEN,2,7,845,851,1,0.625      ! Under Bolt
N,859,10.875+.197,-6.25
N,860,10.875+.197,-6.917
```

```
N,861,10.875+.197,-7.584
N,862,PLUGR2,-8.25
N,863,PLUGR2,-8.75
N,865,PLUGR3,-10.5
FILL,863,865,1
N,866,PLUGR1-0.288,-6.25
N,869,PLUGR1-0.288,-8.25
FILL,866,869,2
N,870,PLUGR1-0.288,-8.476
NGEN,2,5,866,870,1,0.288

/COM **** REFINING LIFTING EAR ****
CSYS,0
N,877,9.53,158.13
N,889,9.53,157.63
N,901,9.53,157.13
FILL,403,404,1,876,1
FILL,413,414,1,888,1
FILL,423,424,1,900,1
FILL,877,405,1,878
FILL,405,406,2,879,1
FILL,889,415,1,890
FILL,415,416,2,891,1
FILL,404,414,1,881
FILL,877,889,1,882
FILL,878,890,1,883
FILL,405,415,1,884
FILL,879,891,1,885
FILL,880,892,1,886
FILL,406,416,1,887
FILL,889,901,1,894
FILL,414,424,1,893
FILL,901,425,1,902
FILL,890,902,1,895
FILL,415,425,1,896
FILL,425,426,2,903,1
FILL,891,903,1,897
FILL,892,904,1,898
FILL,416,426,1,899
FILL,424,434,1,907
FILL,433,434,1,908,1
FILL,423,433,1,905
FILL,905,907


/COM **** FILTER GUARD PLATE ****
PLATE1=0.273
PLATE2=0.6575
PLATE3=1.357
PLATE4=10.25
PLATE5=11.25

N,1200,PLATE4,146.78
N,1202,PLATE5,146.78
FILL
NGEN,5,3,1200,1202,,,-0.85
```

```
NGEN,2,3,1212,1214,,,-0.25
N,1221,PLATE4,141.88
N,1222,10.75,141.88
N,1223,10.915,141.88
FILL,1215,1221,1,1218
FILL,1223,1217,1,1220
FILL,1216,1222,1,1219
N,1237,6.4375,143.38
FILL,1212,1237,3,1225,4
N,1249,3.578,143.38
FILL,1237,1249,2,1241,4
NGEN,2,1,1225,1249,4,,-0.25
NGEN,2,2,1226,1250,4,,-1.25
FILL,1226,1228,1,1227,,7,4
N,1253,2.625,145.255
N,1254,2.625,145.005
N,1256,2.625,143.38
FILL,1254,1256
N,1257,2.625,143.13
N,1259,2.625,141.88
FILL,1257,1259
NGEN,2,10,1253,1259,1,-0.5
NGEN,2,10,1263,1269,1,-0.768
N,1283,0.6575,145.255
N,1284,0.6575,145.005
N,1260,2.125,147.63
N,1270,1.357,147.63
N,1280,0.6575,147.63
N,1290,0.273,147.63
NGEN,3,1,1260,1290,10,,-0.5625

/COM **** NODES AT BOTTOM GAP ELEMENTS ****
NGEN,2,2000,1,10,1,,-1.00


/COM **** COUPLING NODES ****
/COM **** BETWEEN LIFTING/LOCKING RING & SHELL ****
CP,1,UY,508,277              ! Start Threads
CP,2,UY,498,280
CP,3,UY,488,283
CP,4,UY,478,286
CP,5,UY,468,289
CP,6,UY,458,292

/COM **** BETWEEN BOLT & LOCKING RING ****
CP,7,UY,445,910
CP,8,UX,445,910
CP,9,UY,447,911
CP,10,UX,447,911
*DO,I,1,7
CP,10+I,UY,445+10*I,910+2*I
*ENDDO
*DO,I,1,7
CP,17+I,UY,447+10*I,911+2*I
*ENDDO
*DO,I,1,7
```

```
CP,24+I,UX,445+10*I,910+2*I
*ENDDO
*DO,I,1,7
CP,31+I,UX,447+10*I,911+2*I
*ENDDO
NALL
EALL

/COM **** ELEMENT GENERATION FOR SHELL ****
TYPE,1
MAT,1

/COM **** BOTTOM OF SHELL ****
E,1,2,22,21
E,2,3,23,22
EGEN,8,1,-1
E,10,11,30
E,21,22,42,41
E,22,23,43,42
EGEN,10,1,-1
E,11,31,30
E,11,32,31

/COM **** SHELL ****
E,50,51,54,53
EGEN,2,1,-1
EGEN,5,3,-2

/COM **** FIRST TRANSITION ELEMENTS ****
E,65,66,100
E,100,66,101
E,67,101,66

/COM **** SINGLE SHELL ****
E,100,101,103,102
EGEN,40,2,-1

/COM **** SECOND TRANSITION ELEMENTS ****
E,190,180,191
E,180,181,191
E,181,192,191

/COM **** TOP SHELL (DOUBLE ELEMENT) ****
E,190,191,194,193
EGEN,2,1,-1
EGEN,7,3,-2

/COM **** BOTTOM OF COLLAR ****
TYPE,1
MAT,1
E,211,212,215,214
EGEN,2,1,-1
EGEN,11,3,-2
E,244,245,986,985
EGEN,2,1,-1
E,256,257,988,987
```

```
E,257,258,989,988
E,985,986,981,980
EGEN,4,1,-1
E,980,981,248,247
EGEN,2,1,-1
E,982,983,260,249
E,983,984,261,260

/COM **** COLLAR TRANSITION & THREADED REGIONS ****
E,237,991,251,240
E,991,990,251
E,240,251,254,253
E,251,990,255,254
E,253,254,257,256
EGEN,2,1,-1
E,259,260,263,262
EGEN,2,1,-1
EGEN,12,3,-2
E,271,274,1000

/COM **** MERGE COINCIDENT NODES FOR SHELL ****
ESEL,S,TYPE,,1
NSLE
NUMMRG,NODE,
EALL
NALL
/COM **** END OF SHELL/COLLAR ELEMENT GENERATION ****

/COM **** LOCKING/LIFTING RING ELEMENTS ****
TYPE,3
MAT,1
E,411,412,402,401
EGEN,2,1,-1
EGEN,2,10,-2
E,413,888,876,403
E,881,404,876
E,888,881,876
E,888,414,881
E,881,882,877,404
E,414,889,882,881
E,882,883,878,877
E,889,890,883,882
E,883,884,405,878
E,890,415,884,883
E,884,885,879,405
E,415,891,885,884
E,885,886,880,879
E,891,892,886,885
E,886,887,406,880
E,892,416,887,886
E,423,900,888,413
E,893,414,888
E,900,893,888
E,900,424,893
E,893,894,889,414
E,424,901,894,893
```

```
E,894,895,890,889
E,901,902,895,894
E,895,896,415,890
E,902,425,896,895
E,896,897,891,415
E,425,903,897,896
E,897,898,892,891
E,903,904,898,897
E,898,899,416,892
E,904,426,899,898
E,431,432,422,421
E,905,423,422
E,432,905,422
E,432,433,905
E,905,906,900,423
E,433,908,906,905
E,906,907,424,900
E,908,434,907,906
E,441,442,432,431
EGEN,2,1,-1
E,443,908,433
E,443,444,434,908
E,451,452,442,441
EGEN,3,1,-1
EGEN,7,10,-3
E,454,912,910,444
E,464,914,912,454
E,474,916,914,464
E,484,918,916,474
E,494,920,918,484
E,504,922,920,494
E,514,924,922,504
E,458,448,911,913
E,468,458,913,915
E,478,468,915,917
E,488,478,917,919
E,498,488,919,921
E,508,498,921,923
E,518,508,923,925

/COM **** BOLT ****
TYPE,5
MAT,5
E,455,456,446,445
EGEN,8,10,-1
E,456,457,447,446
EGEN,8,10,-1
/COM ************* END OF LOCKING/LIFTING RING *************

/COM **** SHIELD PLUG ELEMENTS ****
TYPE,2
MAT,1
E,602,622,621,601
EGEN,11,1,-1
EGEN,2,20,-11
E,613,1290,612
```

```
E,1290,1280,632,612
E,1280,633,632
E,633,1270,632
E,1270,652,632
E,1270,653,652
E,643,663,662,642
EGEN,10,1,-1
EGEN,2,20,-10
E,673,693,692,672
EGEN,2,20,-10
E,653,1260,652
E,1260,672,652
E,1260,673,672
E,707,717,716,706
EGEN,7,1,-1
E,717,737,736,716
EGEN,7,1,-1
E,731,751,750,730
EGEN,13,1,-1
E,749,769,768,748
EGEN,15,1,-1
E,767,787,786,766
EGEN,17,1,-1
EGEN,2,20,-17
E,818,825,824,817
EGEN,6,1,-1
EGEN,5,7,-6
E,853,860,859,852
EGEN,6,1,-1
E,860,867,866,859
EGEN,3,1,-1
E,867,872,871,866
EGEN,4,1,-1
/COM ************* END OF SHIELD PLUG *************

/COM ************* FILTER GUARD PLATE *************
E,1200,1201,858,851
E,1201,1202,865,858
E,1203,1204,1201,1200
EGEN,2,1,-1
EGEN,6,3,-2
E,1221,1222,1219,1218
E,1222,1223,1220,1219
E,1226,1215,1212,1225
E,1227,1218,1215,1226
E,1228,1221,1218,1227
E,1230,1226,1225,1229
EGEN,3,1,-1
EGEN,6,4,-3
E,1257,1250,1249,1256
EGEN,3,1,-1
E,1264,1254,1253,1263
EGEN,6,1,-1
E,1271,1261,1260,1270
EGEN,9,1,-1
E,1281,1271,1270,1280
```

```
EGEN,4,1,-1
E,1291,1281,1280,1290
EGEN,2,1,-1

/COM ************* CONTACT ELEMENTS *************
/COM **** BETWEEN LOCKING RING & SHIELD PLUG ****
TYPE,4
REAL,4
E,806,401
E,807,411
E,808,421
E,809,431
E,810,441
E,811,451
E,812,461
E,813,471
E,814,481
E,815,491
E,816,501
E,817,511

/COM **** BETWEEN SHIELD PLUG & BOTTOM OF BOLT
REAL,5
N,3000,10.875-.197,151.88
E,3000,525
E,852,526
E,859,527

/COM **** BETWEEN SHIELD PLUG & SHELL (ABOVE SEAL)
REAL,4
E,271,871
E,268,872
E,265,873
E,262,874

/COM **** BETWEEN SHIELD PLUG & SHELL (BELOW SEAL)
E,863,980

/COM **** BETWEEN SHIELD PLUG AND SEAL LIP
TYPE,4
REAL,6
E,248,870
E,249,875

/COM **** BOTTOM GAP ELEMENTS
TYPE,4
REAL,7
E,2001,1
EGEN,10,1,-1
NALL
EALL
/COM ************* END GAP ELEMENTS *************

/COM ************* BOUNDARY CONDITIONS *************
CSYS,0
NSEL,S,LOC,X,0
```

```
NSEL,R,LOC,Y,-1.33,158.14
D,ALL,UX,0
NALL
EALL
NSEL,S,NODE,,2001,2010
D,ALL,ALL,0
EALL
NALL

/COM **** FINE TUNE SEAL & BOLT REGIONS ****
NMODIF,869,11.72,149.88
NMODIF,870,11.72,149.65
TYPE,2
EMODIF,420,1,3000,846,853,852
E,845,846,3000,3000
TYPE,4
REAL,8
E,248,869                               ! seal spring
FINI


/COM ***************      SOLUTION PHASE      **************
/SOLUTION
TIME,1                       ! bolt preload only
LSWRITE,1


TIME,2                         ! Preload + Pressure

/COM **** 150 PSI INTERNAL PRESSURE ****
NSEL,S,LOC,X,0,1.26          ! Bottom Plate
NSEL,R,LOC,Y,-0.45,-0.43
SF,ALL,PRES,150
NALL
EALL
NSEL,S,LOC,X,1.24,2.14
NSEL,R,LOC,Y,-0.45,0.45
SF,ALL,PRES,150
NALL
EALL
NSEL,S,LOC,X,2.12,11.51
SF,ALL,PRES,150
NALL
EALL
NSEL,S,LOC,X,11.49,11.51       ! Inside Shell
NSEL,R,LOC,Y,0.43,149.64
SF,ALL,PRES,150
NALL
EALL
NSEL,S,LOC,X,11.49,11.76       ! Edge Shell to Seal
NSEL,R,LOC,Y,149.62,149.64
SF,ALL,PRES,150
NALL
EALL
NSEL,S,LOC,X,11.67,11.69       ! Seal
NSEL,R,LOC,Y,149.64,149.89
```

```
SF,ALL,PRES,150
NALL
EALL
NSEL,S,LOC,X,11.44,11.69      ! Shield Plug (above seal)
NSEL,R,LOC,Y,149.87,149.89
SF,ALL,PRES,150
NALL
EALL
NSEL,S,LOC,X,11.44,11.46      ! Side of Shield Plug
NSEL,R,LOC,Y,149.37,149.89
SF,ALL,PRES,150
NALL
EALL
NSEL,S,LOC,X,11.24,11.46      ! Shield Plug Taper
NSEL,R,LOC,Y,147.62,149.39
SF,ALL,PRES,150
NALL
NSEL,S,LOC,X,11.24,11.26      ! Guard Plate Ring
NSEL,R,LOC,Y,143.12,147.64
NALL
EALL
NSEL,S,LOC,X,10.914,11.26      ! Guard Plate Taper
NSEL,R,LOC,Y,141.87,143.14
SF,ALL,PRES,150
NALL
EALL
NSEL,S,LOC,X,1.34,10.92       ! Guard Plate Bottom
NSEL,R,LOC,Y,141.87,141.89
SF,ALL,PRES,150
NALL
EALL
LSWRITE,2
LSSOLVE,1,2
FINI

/POST1            ! Obtain Bolt/Seal Response
SET,1
LPATH,525,527        ! Bolt Cross Section
PRSECT
LPATH,870,875        ! Seal Stop Cross Section
PRSECT
ETABLE,FORCE,SMISC,1   ! Seal Normal Force
ESEL,S,REAL,,8
PRETAB
EALL
SET,2
LPATH,525,527        ! Bolt Cross Section
PRSECT
LPATH,870,875        ! Seal Stop Cross Section
PRSECT
ETABLE,FORCE,SMISC,1   ! Seal Normal Force
ESEL,S,REAL,,8
PRETAB
FINI
/EXIT
```

COMPUTER RUN COVER SHEET

Project Number:	KH-8009-8
Computer Code:	ANSYS®-PC
Software Version:	5.3
Computer System:	Windows 95, Pentium® Processor
Computer Run File Number:	KH-8009-8-02
Unique Computer Run Filename:	MXBOLT.out
Run Description:	Analysis of MCO Closure Response, Maximum Bolt Load.
Run Date / Time:	24 November 1998 7:49:55 PM

Prepared By: Zachary G. Sargent 2/4/99 Date

Checked By: Henry S. Averette 2/4/99 Date

REVISION	0	1	2		**PAGE 55** **OF 55**
PREPARED BY / DATE	CJT 04/17/9	HSA 7/14/98	ZGS 02/04/99		
CHECKED BY / DATE	BW 04/17/97	ZGS 7/14/98	HSA 02/04/99		

PARSONS	CALCULATION PACKAGE	FILE NO: KH-8009-8-03 DOC. NO: HNF-SD-SNF-DR-003, Rev. 2, Appendix 5 PAGE 1 of 125

PROJECT NAME:
MCO Design

CLIENT:
DE&S Hanford, Inc.

CALCULATION TITLE:
MULTI-CANISTER OVERPACK (MCO) STRUCTURAL DROP ANALYSIS

PROBLEM STATEMENT OR OBJECTIVE OF CALCULATION:

THE OBJECTIVE OF THIS CALCULATION PACKAGE IS TO DEMONSTRATE THE STRUCTURAL ADEQUACY OF THE MCO SHELL AND THE FILTER GUARD PLATE IN ACCORDANCE WITH REVISION 5 OF THE MCO PERFORMANCE SPECIFICATION.

DOCUMENT REVISION	AFFECTED PAGES	REVISION DESCRIPTION	PREPARED BY INITIALS / DATE	CHECKED BY INITIALS / DATE	APPROVED BY INITIALS / DATE
0	1-198	Initial Issue	Zachary Sargent	Joe Nichols	Charles Temus
1	1-163	Eliminated 304SS material properties. Recalculated stress ratios and included Buckling Code Case N-284-1. Revised to reflect change in Design Pressure from 150 psig to 450 psig, new geometry and material changes.	Zachary Sargent	Henry Averette	Charles Temus
2	1-125	Up-date lifting cap analyses, change all materials to 304/304L. Update design pressure analyses. Revise drop load cases to properly reflect design spec. Added final weld evaluation and Section 13	~~HSA~~ 2/9/99 Pgs. 1-117 DBarlow DB 2-9-99 p. 118-125	DBarlow DB 2/9/99 p. 1-117 HSA 2/9/99 Pg. 118-125	Charles Temus C/T 2/9/99

CONTENTS

LIST OF TABLES

APPENDICES

1. INTRODUCTION

The MCO assembly is a single purpose Spent Nuclear Fuel (SNF) container that is capable of maintaining subcriticality at all times and maintain SNF containment and confinement after being closed and sealed. The MCO assembly consists of a shell, a shield plug and one to six SNF baskets.

This calculation documents the evaluation of the MCO shell and the filter guard plate under different drop loads. The following load cases are considered:

1. 54g Bare Bottom End Drop without the lifting cap, 150 psi internal pressure, 132°C (270° F) temperature.
2. 54g Bare Bottom End Drop with the lifting cap, 450 psi internal pressure, 132°C (270°F) temperature.
3. 28g CSB tube drop of a fully loaded MCO onto another MCO without modified lifting cap, 150 psi internal pressure, 132°C (270°F) temperature.
4. 28g CSB Tube Drop of a fully loaded MCO onto another MCO with modified lifting cap, 450 psi internal pressure, 132°C (270°F) temperature.

The evaluations are performed based on the criteria of the ASME Code and the Performance Specification [1]. A combination of hand calculations and ANSYS® analysis is used.

2. REFERENCES

1. "Performance Specification for the Spent Nuclear Fuel Multi-Canister Overpack," Specification HNF-S-0426, Revision 5, December 1998.
2. ASME Boiler and Pressure Vessel Code, Section II - Materials, Part D - Properties, 1998 Edition.
3. ASME Boiler and Pressure Vessel Code, Section III, Subsection NB - Class 1 Components, 1998 Edition with 1998 Appendix F.
4. Roark, Raymond J., & Young, Warren C., "Formulas for Stress and Strain", 6th Edition, McGraw-Hill Book Company, New York, 1989.
5. Swanson Analysis Systems, Inc., ANSYS® Engineering Analysis System User's Manual, Version 5.4, 1996.
6. Parsons I & T, File KH-8009-8-05, " Stress Analysis of the Mark IA Storage and Scrap Basket", January 1999.

7. ASME Boiler and Pressure Vessel Code, Supplement No. 11, Code Cases for Nuclear Components, 1998 Edition.
8. Appendix 1 of the MCO Design Report, MCO Drawings.
9. Appendix 13 of the MCO Design Report, Main Seal Data.
10. Manual of Steel Construction, American Institute of Steel Construction, 9th Edition, 1989.

3. ASSUMPTIONS

1. Pressure is applied uniformly.
2. The maximum weight of a fully loaded Mark IV basket is 3189.96 lbs. The following analyses are conservative using 3,225 lbs. for each basket.
3. Maximum shell outer diameter at the collar is increased from 25.27 to 25.31inches (drawing H-2-828042, Revision 1).
4. Calculations performed in this analysis are based on 25.27 inches and therefore are conservative.
5. The collar thread relief thickness is conservatively modeled 0.354 inches, rather than the minimum thickness of 0.373 inches specified on drawing H-2-828042, Revision 1.
6. Others as noted.

4. MATERIAL PROPERTIES

The MCO shell and collar are fabricated from dual certified 304L stainless steel. Dual certified 304L has low carbon content with 304 properties. The remaining components of the MCO assembly are fabricated from 304L stainless steel (without the dual certification of the material properties). For this analysis, allowable stress values are taken from Section II, Part D of the ASME Code (See [2]) and are listed in Table 11.

Table 1: ASME Code Material Properties, SA - 240 Type 304 Stainless Steel

Temp	70° F	200° F	300° F	270° F②
E - psi	28.3×10^6	27.6×10^6	27.0×10^6	27.18×10^6
S_M - psi	20,000	20,000	20,000	20,000
S_Y- psi	30,000	25,000	22,500	23,250
S_U- psi	75,000	71,000	66,000	67,500
α-in/in/°F①	8.46×10^{-6}	8.79×10^{-6}	9.00×10^{-6}	8.94×10^{-6}

Notes:

① Mean Coefficient of Thermal Expansion from 70°F to Temp

② Linearly interpolated between 200° F and 300° F.

Table 2: ASME Code Material Properties, SA - 240 Type 304L Stainless Steel

Temp	70° F	200° F	300° F	270° F②
E - psi	28.3×10^6	27.6×10^6	27.0×10^6	27.18×10^6
S_M - psi	16,700	16,700	16,800	16,700
S_Y- psi	25,000	21,300	19,100	19,760
S_U- psi	70,000	66,200	60,900	62,490
α-in/in/°F①	8.46×10^{-6}	8.79×10^{-6}	9.00×10^{-6}	8.94×10^{-6}

Notes:

① Mean Coefficient of Thermal Expansion from 70°F to Temp

② Linearly interpolated between 200° F and 300° F.

5. ACCEPTANCE CRITERIA

This calculation considers only the postulated drop loads define in the MCO Performance Specification [1]. Criteria for the evaluated drop loads must meet Section III, Subsection NB of the ASME Code with Appendix F [3] and Section 4.9.5 of the MCO Performance Specification [1]. The stress limits criteria and resulting allowables are summarized in Table 333 and Table 444, respectively, and are based on a maximum drop temperature of 132°C (270° F). Furthermore, the criteria of Section 4.9.5 of the MCO Performance Specification states that "In no case, including post accident conditions, is the MCO inside circumference below the bottom of the shield plug allowed to exceed 73.04 inches (23.25 in. ID x π)". Ultimately the MCO shell inside diameter is not to exceed 23.25 inches.

Table 3: Allowable Stress Limit Criteria Summary

Stress Category	**Service Level D (Accident Conditions)**
Primary Membrane Stress Intensity (P_m)	Lesser of $2.4S_m$ and $0.7S_u$
Local Membrane Stress Intensity (P_L)	Lesser of $3.6S_m$ and S_u
Primary Membrane + Bending Stress Intensity (P_m+P_b)	Lesser of $3.6S_m$ and S_u
Primary Membrane + Secondary Stress Intensity Range (P_m+P_b+Q)	n/a

Table 4: Level D Allowable Stresses - Elastic analysis (Temperature = 132°C)

Material	**S_M (ksi)**	**Level D Stress① Limits (ksi)**		
		P_m	**P_L**	**P_M (or P_L) + P_B**
Type 304	20.0	47.25	67.50	67.50
Type 304L	16.7	40.08	60.12	60.12

Notes

① Level D Stress Limits taken from Appendix F, F-1331, 1998 ASME Code.

6. LOAD CONDITIONS & COMBINATIONS

The MCO assembly is evaluated for the following conditions:

1. 54g Bare Bottom End Drop without the lifting cap, 150 psi internal pressure, 132°C (270° F) temperature.
2. 54g Bare Bottom End Drop with the lifting cap, 450 psi internal pressure, 132°C (270°F) temperature.
3. 28g CSB tube drop of a fully loaded MCO onto another MCO without modified lifting cap, 150 psi internal pressure, 132°C (270°F) temperature.
4. 28g CSB Tube Drop of a fully loaded MCO onto another MCO with modified lifting cap, 450 psi internal pressure, 132°C (270°F) temperature.

In each of the above conditions, the MCO assembly is fully loaded with five Mark IV baskets.

The 28g CSB drops bounds the 27g vertical drop with the cask. The 54g Bare bottom End Drop bounds the following cases:

- 25 g vertical "Piston Drop" into cask

- 27 g vertical drop with cask, bottom end down
- 35 g vertical drop into CSB tube

The drops of the MCO within the cask are evaluated as follows:

- For the 101g horizontal drop, the cask spacer discs provide support and restrain for a horizontal drop. Furthermore, the baskets and their support rods and center posts will provide stiffening for the shell. Such support and stiffening will prevent the MCO shell to exceed its allowed maximum diameter. There is a high probability of localized denting of the MCO shell where is meets with the cask spacer discs. This localized denting will produce stresses above those acceptable for Service Level D. However, since the cask spacer disc is thick and the MCO shell material has a relatively high elongation, the amount of distortion will be limited and no expected breach of containment by the MCO is expected. Since the localized denting is an inward process, violation of the circumference criteria for criticality is not expected. Therefore, no further analysis is required.

- The two-foot 54g drop bounds the 27g drop in the cask and no further analysis is required.

- The analysis for the corner drops can be broken down to each vertical and horizontal resultant for each drop. Therefore, the 54g drop bounds the vertical resultant of the 33.5g corner drop with the lid up (angle of impact is 10.5° off vertical) since it is equal to 33.5g x Cosine(10.5°) or 32.9g. The horizontal 101g drop bounds the horizontal resultant of the 33.5g corner drop since it is equal to 33.5g x Sine(10.5°) or 6.1g. The 28g CSB drop bounds the vertical resultant of the 27.4g corner drop with lid down (angle of impact is 10.5° off vertical) since it is equal to 27.4g x Cosine(10.5°) or 26.9g. The horizontal 101g bounds the horizontal resultant of this drop since it is equal to 27.4g x Sine(10.5°) or 5.0g. The resulting stresses for the bounding cases investigated in this calculation do not exceed allowables. Therefore, the stresses ensuing from the 33.5g and 27.4g corner drops are not expected to exceed the bounding analyses performed and no further analysis is required.

7. FILTER GUARD PLATE

7.1 Introduction

The guard plate on the MCO shield plug is evaluated for its ability to protect the internal filters in a top down drop load. The plate has to withstand a 28g load of the entire payload of the MCO including baskets. Conservatively, no credit is taken for the baskets to support any of the fuel. Service level D stress allowables are used for the acceptance criteria. The load level of 28 g's bounds the loading case of 27 g's (lid down) in Table 3 of the MCO Performance Specification.

7.2 Method of Analysis

A hand calculation is performed for the buckling of the guard plate support ring. A hand calculation is also performed to size the weld between the ring and the shield plug and the weld between the plate and its supporting ring.

7.3 Assumptions

1. The fuel loads the plate uniformly
2. The baskets provide structural capacity to distribute the fuel load.
3. Temperature at impact is 132°C (270°F)
4. Maximum weight comes from 5 Mark IV baskets; each basket weighing a maximum of 3,225 lbs.

7.4 Geometry

The support ring is a 1 inch thick ring 4.25 inches high and 22.50 in. OD. Drawing H-2-828046, Rev 1. "MCO Internal Filter Guard" is used for reference and dimensions.

7.5 Material Properties

The guard plate and its support ring are fabricated from Type 304L stainless steel. At 132°C (270°F), the material properties, as defined in Sections 4 and 5, are:

$E = 27.2\text{x}10^6$ psi $S_M = 16.7$ ksi $\upsilon = 0.3$

$S_Y = 19.76$ ksi $S_U = 62.49$ ksi

7.6 Acceptance Criteria

The guard plate must not deflect more than one inch, as it must protect the filters. The support ring must also be checked for buckling.

7.7 Load Combinations

The only load considered for this calculation is an axial acceleration of the fuel at 28 g's for buckling check of the ring. For the welds, an acceleration of 101 g's is used as it provides a worst case acceleration for a side load.

7.8 Analysis

7.8.1 Support Ring

The support ring is assumed to support the entire weight of the payload. The area of the ring is:

$$A_r = \pi \times \left[\frac{22.5^2}{4} - \frac{20.5^2}{4}\right] = 67.54\ \text{in}^2$$

and

$$F = (5\ \text{baskets})(3{,}225\ \text{lbs.})(28g) = 451{,}500\ \text{lbs.}$$

The stress in the ring is:

$$\sigma = \frac{F}{A_r} = \frac{451{,}500\ \text{lbs}}{67.54\ \text{in}^2} = 6{,}684.9\ \text{psi} \quad \text{or } 6{,}685\ \text{psi}$$

The stress σ is well below the allowables of Service Level D (See Table 444). Assuming a uniform axial load p, the change in the height dimension can be found by:

From Roark's [4], Table 28, Case 1a;

$$\frac{R}{t} = \frac{10.25\ \text{in}}{1.00\ \text{in}} = 10.25$$

$$\Delta y = \frac{py}{Et}$$

where;

$$p = \text{Unit Load} = \frac{451{,}500\ \text{lbs}}{(\pi) \times \left(\frac{20.5 + 22.5}{2}\right)} = 6{,}685\ {}^{\text{lbs}}\!/_{\text{in}}$$

Ring Height = 4.25 inches

$$\Delta y = \frac{(6{,}685\ {}^{\text{lbs}}\!/_{\text{in}}) \times (4.25\ \text{in})}{(27.2\text{x}10^6\ \text{psi}) \times (1.00\ \text{in})} = 0.001\ \text{inches}$$

Because of its geometry (very short) and low stress, buckling of the ring is not a concern.

7.8.2 Weld Sizing

Welding of the support ring to the shield plug and the guard plate to the support ring requires the use of structural welds. The size of the welds is determined as follows:

From Appendix 3, Calculation KH-8009-8-01, the nominal weights of the support ring and the guard plate are given as follows:

W_{RING} = 88.11 lbs (89 lbs is conservatively used)

W_{PLATE} = 163.96 lbs (164 lbs is conservatively used)

The center of gravity, from the bottom of the shield plug, of those two components is:

$$\frac{(W_{PLATE})(X_{PLATE})+(W_{RING})(X_{RING})}{W_{PLATE}+W_{RING}}$$

$$\frac{(155.20lbs)\left(4.25in+\frac{1.50in}{2}\right)+(81.12lbs)\left(\frac{4.25in}{2}\right)}{(155.20lbs)+(81.12lbs)}$$

CG = 3.99 inches

The circumferential length of weld, where the diameter, D = 22.50 inches, is

$L_W = \pi D$ = 70.7 inches

and the weld section modulus is

$$S_W = \frac{\pi(D)^2}{4} = \frac{\pi(22.50in)^2}{4} = 398 \text{ in}^2$$

The rules and stress limits which must be satisfied for welds for any Level A through D Service are those given in Table NF-3324.5(a)-1 multiplied by the appropriate base material stress limit factor given in Table NF-3523(b)-1 for components supports. However, per Table NF-3523(b)-1, for Service Level D, the stress limit factors must be obtained from Appendix F (F-1334) of the Code. From Table NF-3324.5(a)-1:

For the base metal (Type 304L) S_U @ 132°C = 62.49 ksi (from Table 2 above). While not specified, the weld metal will have 'as good or better' material properties than the base metal. Therefore, S_U for weld metal is 62.49 ksi. The stress limits then become;

For the base metal, $F_W = 0.40(S_{Y,\text{ Base Metal}})$ = 0.40(19.76 ksi) = 7.90 ksi

For the weld metal, $F_W = 0.30(S_{U,\text{ Weld}})$ = 0.30(62.49 ksi) = 18.75 ksi

And from Appendix F, F-1334 of the Code "the allowable stress presented for Level A Service Condition may be increased using the following factors: the smaller of 2 or $1.167\frac{S_U}{S_Y}$ if $S_U > 1.2S_Y$ or 1.4, if $S_U \le 1.2S_Y$, where S_Y is the yield strength, in ksi, and S_U is the ultimate tensile strength, in ksi, both at temperature."

$$1.2S_Y = 1.2(19.76) = 23.7 < S_U, \quad \text{therefore}$$

$$1.167\frac{S_U}{S_Y} = 1.167\frac{62.49\text{ksi}}{19.76\text{ksi}} = 3.69 > 2$$

Using a factor of 2, F_W then becomes:

For the base metal, $F_W = 2(7{,}900 \text{ psi}) = 15{,}800 \text{ psi}$

For the weld metal, $F_W = 2(19{,}750 \text{ psi}) = 39{,}500 \text{ psi}$

As stated above, 101g side drop is the worst possible case and therefore is considered below.

$$f_{W1} = \frac{(101g)(W_{RING} + W_{PLATE})}{L_W} = \frac{(101g)(89\text{ lbs} + 164\text{ lbs})}{70.7\text{in}}$$

$f_{W1} = 361$ lb/in.

$$f_{W2} = \frac{(101g)(W_{RING} + W_{PLATE})(CG)}{S_W} = \frac{(101g)(89\text{ lbs} + 164\text{ lbs})(3.99\text{ in})}{398\text{ in}^2}$$

$f_{W2} = 257$ lb/in.

$$f_W = \sqrt{(f_{W1})^2 + (f_{W2})^2} = \sqrt{(361\,{}^{lb}\!/_{in})^2 + (257\,{}^{lb}\!/_{in})^2}$$

$f_W = 443$ lb/in

The minimum weld size required is

$$\text{For the Throat} = \frac{443\sqrt{2}}{39{,}500} = 0.0158 \text{ in}$$

$$\text{For the Base} = \frac{443}{15{,}800} = 0.0280 \text{ in}$$

However, the minimum weld size per AISC Specification [10], Table1.17.2A is 5/16 inch. Therefore,

$\text{Weld}_{MIN} = 0.3125$ in.

And the stresses in the 5/16 inch weld are then:

For the Throat = $\frac{415\sqrt{2}}{0.3125in} = 1.88$

For the Base = $\frac{415}{0.3125in} = 1.33$

8. CLOSURE SEAL LEAKAGE

A drop of one MCO onto another MCO inside the CSB Tube is defined by the MCO Performance Specification as a 28g load (load case 3). This drop load is reacted at the top of the bottom MCO shield plug, which, in turn, is reacted through the closure seal / seal stop at the bottom of the shield plug. Section 25, Table 5 indicates that the seal stop does not exceed yield (21.75 ksi calculated v. 23.25 ksi yield) when the MCO has an internal pressure of 150 psig. This section evaluates the consequences when such seal stop exceeds minimum material yield strength (potential worst case scenario at 0 psig). The seal stop is relatively narrow at 0.270 inches.

Given:

W_{MCO} = Weight of fully loaded MCO = 19,703 lb.

G = G-load = 28

σ_Y = 304 minimum yield strength @ 132°C = 23,250 ksi

OD_{SP} = Shield plug outside diameter = 23.980 in.

t_{SS} = Seal stop width = 0.270 in.

A_{SS} = Seal stop area = 20.11 in^2

h_{SS} = Seal stop height = 0.155 in.

The seal stop stress for a 28g drop is

$$\sigma_{SS} = \frac{(W_{MCO})(G)}{A_{SS}} = 27,433 \text{ psi}$$

Estimating the plastic strain by conservatively assuming a strain hardening slope of 1.6 x 10^5 psi [6] gives:

$$\varepsilon_P = \frac{\sigma_{SS} - \sigma_Y}{1.6 \times 10^5 \text{psi}} \quad \text{plastic strain, in/in}$$

σ_Y = 304L minimum yield strength @ 132°C = 19,760 ksi

ε_P = 0.048 in/in

$\delta_P = (\varepsilon_P)(h_{SS})$ plastic (non-recoverable) deformation, inches

$\delta_P = 0.00743$ inches

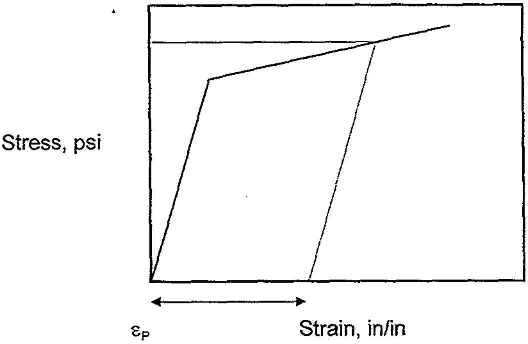

The Helicoflex seal of this cross-section size (4.7 mm) can accommodate an additional 0.3 mm (.012 in.) of compression [9] and maintain sealing.

As 0.00743 in. < .012 in., the seal will remain leak-tight.

9. BARE BOTTOM END DROP

9.1 Introduction

The MCO shell and its contents are evaluated for a two foot 54 g vertical drop onto a flat reinforced concrete surface. The MCO lands on the bottom end and there is no credible possibility of a side slap down secondary impact of the MCO. The following analysis is performed at 132°C (270°F) with an internal pressure of 450 psi (load case 2). The analyses in Section 12 determine the response of the MCO during load cases 1 and 2 (see Section 6 for definition of load cases).

9.2 Geometry

The MCO consists of a cylindrical shell, bottom plate, shield plug, locking ring and jacking bolts. The shell has an outer diameter, which ranges from 24.00 inches to 25.27 inches. The shell diameter is increased to 25.27 inches at beginning of the canister collar to accommodate the shield plug and its locking ring. The MCO cylindrical shell has an inside diameter of 23.00 inches and a length of 139.76 inches. The bottom plate of the MCO is a solid plate 1.130 inches thick at the center and 2.010 inches at the edges.

9.3 Assumptions

In the following analysis, it is assumed that the MCO is fully loaded with five Mark IV baskets, two of which are scrap baskets. The fuel is modeled with the properties of stainless steel except for the scrap baskets, which have hydrostatic properties when externally loaded.

9.4 Analysis

9.4.1 Internal Pressure

The inside diameter of the MCO shell is 23.00 inches and its outer diameter is 24.00 inches. The wall thickness is therefore 0.5 inch. The stress through the shell due to the pressure load is then

$$\sigma_P = \frac{pR}{t}$$

where;

p = internal pressure = 450 psig

R = Mean Radius = (24.00+23.00)/4 = 11.75 in.

T = thickness of MCO shell = 0.5 in.

Therefore;

$$\sigma_P = \frac{(450)(11.75)}{0.50} = 10{,}575 \text{ psi}$$

9.4.2 Hydrostatic Pressure

Upon impact, it is assumed that the bottom basket is crushed. No credit is taken for the baskets to support the fuel and the bottom baskets' fuel is modeled with hydrostatic properties (see Figure 11). The values of K and γ are obtained from [6]. The pressure acting on the shell on at the top of the bottom basket is equivalent to the weight of the four baskets above it and determined as follows:

Given:

$$A = \text{MCO internal area} = \pi \times \frac{(23.00)^2}{4} = 415.48 \text{ in}^2$$

W_B= Maximum weight of a Mark IV basket = 3,225 lbs

G = g-load = 54

K = Pressure Coefficient = 0.3

γ = Density of fuel = 0.217 lb/in^3

h = height of basket = 28 inches is conservatively used

$$P_o = \frac{(4 \text{ baskets}) \times (3{,}225 \text{ lbs})}{415.48 \text{ in}^2} \times 54g \times 0.3 = 503 \text{ psi}$$

The triangular pressure distribution is.

$$P_h = (K)(G)(\Delta h)(\gamma) + P_o$$

The maximum pressure due to the triangular pressure distribution component occurs where h is maximum (28 inches).

$$P_{h,\max} = (K)(G)(\Delta h)(\gamma) + P_o = (0.3)(54)(28)(0.217) + 503 = 1{,}051 \text{ psi}$$

This pressure is additional to the internal P = 450 psi stated above. In accordance with 4.9.5 of the MCO Performance Specification, the shell's maximum circumference is not to exceed 73.04 inches (23.25 x π). At 23.25 inches, the maximum radial displacement allowed is 0.25 inch diametrically, or 0.125 inch radially. Conservatively assuming that the maximum pressure from the crushed fuel and the internal are uniformly distributed (constant pressure of 1,051 psi), and that the ends of the shell are not constrained, the maximum radial displacement is shown to be much less than 0.125 inches. From Roark [4], Table 28, Cases 1b, the deformation in a thin-walled pressure vessel, with a uniform radial pressure is used:

$$\Delta R_{1b} = \frac{qR^2}{Et}$$

where;

q = Internal pressure = 1,051 psi

R = Radius of Curvature = 11.75 inches

E = Young's Modulus = 27.2 x 10^6 psi

t = Wall thickness of the pressure vessel = 0.50 inches

therefore;

$$\Delta R_{1b} = \frac{(450psi)\times(11.5)^2}{(27.2\times10^6 psi)\times(0.5in)} = 0.00438$$

This radial displacement, calculated very conservatively, is well below the maximum of 0.125 inches

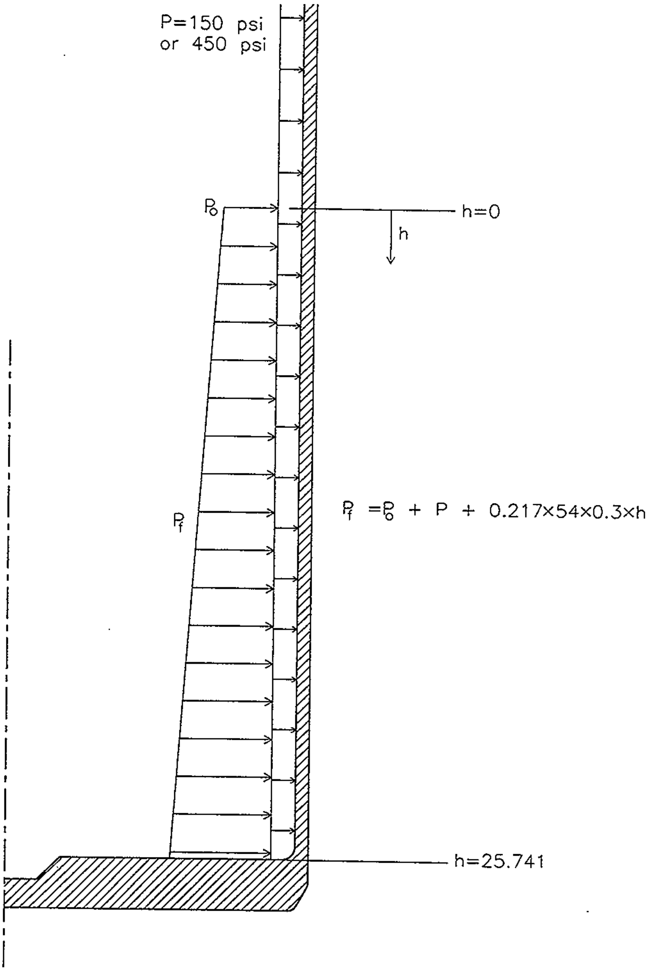

Figure 1: Bare Bottom End Pressure Loading

$$\Delta R_{1b} = \frac{qR^2}{Et} \quad \Delta R_{1d} = \frac{q_o R^2 y}{Etl} \quad q = \frac{q_o y}{l} \quad \Delta R_{1b} = \frac{(450psi)\times(11.5)^2}{(27.2\times10^6 psi)\times(0.5in)} = 0.00438$$

$$\frac{ql}{y} = \frac{(764.09)(139.76)}{24.14} = 4424 \quad \frac{(4424)(11.50)^2(24.14)}{(27.2\times10^6)(0.50)(139.76)} = 0.00743$$

10. CSB TUBE DROP

10.1 Introduction

The MCO is evaluated for a 28g drop in the CSB tube. This simulates the vertical drop of one MCO onto another MCO. The top of the lower MCO being impacted receives a 28g vertical load and is evaluated with and without the lifting cap on. This evaluation of the CSB Tube drop concentrates on the buckling of the shell and its impact.

10.2 Geometry

The MCO consists of a cylindrical shell, bottom plate, shield plug, locking ring, jacking bolts and lifting cap. The shell has a diameter, which ranges from 24.00 inches to 25.27 inches. The shell diameter is increased to 25.27 inches at beginning of the canister collar to accommodate the shield plug and its locking ring. The MCO shell has an inside diameter of 23.00 inches and a length of 139.76 inches. The bottom of the shell is a solid plate 1.130 inches thick at the center and 2.01 inches at the edges.

10.3 Assumptions

In the following analysis, it is assumed that the MCO impacting the lower MCO is fully loaded with five Mark IV baskets. The lower MCO is restricted by the CSB Tube.

10.4 Analysis

As stated above, this load case analyzes the drop of a fully loaded MCO onto another one. The lower MCO is of concern since the shell is subject to buckling. The top of the MCO being impacted receives the equivalent of a 28g load from the upper MCO. The upper MCO lands on the shield plug or the lifting cap of the lower MCO, depending on the evaluation.

The equivalent pressure received by the top of the lower MCO shield plug is calculated by taking the weight of a fully loaded, dry MCO, multiplied by the g-load and divided by the area of the shield plug or the lifting cap.

Where the MCO being impacted does not have the lifting cap, it is assumed that all the weight hits the shield plug first, and not the locking ring. From [1], the weight of a fully loaded MCO, dry, with five loaded Mark IV baskets is 19,703 lbs (20,000 lbs is conservativley assumed). The area of the shield plug does not include the process ports, therefore it is

$$A_{SP} = 39.54 \text{ in}^2$$

The equivalent load applied is

$$P_{EQ} = (28)(20{,}000) = 560{,}000 \text{ lbs}$$

therefore;

$$\frac{P_{EQ}}{A_{SP}} = 1371958 \text{ psi}$$

Where the MCO being impacted has the lifting cap, it is assumed that all the weight is distributed evenly. That distribution is represented as an equivalent pressure acting on top of the lifting cap. The area of the cap is:

$A_{CAP} = 316.6 \text{ in}^2$ (does not include the access port hole through the cap)

therefore;

$$\frac{P_{EQ}}{A_{CAP}} = 1{,}769 \text{ psi}$$

The bottom shell of the MCO sees a stress of P_{EQ}/A_{SHELL} equal to

$$A_{SHELL} = (\pi)\frac{(24.00)^2 - (23.00)^2}{4} = 36.91 \text{ in}^2$$

$$\sigma_{SHELL} = \frac{P_{EQ}}{A_{SHELL}} = 15{,}172 \text{ psi}$$

11. ANSYS® ANALYSIS

In addition to the hand calculations described in Sections 8 and 9, an evaluation of the MCO assembly are performed using the ANSYS®, Version 5.4 finite element program.

11.1 Axisymmetric Model (Load Cases 1, 2, and 3)

The model is axisymmetric (2-D) with PLANE42 elements which have 4 nodes and 2 degrees of freedom at each node.

11.1.1 Boundary Conditions

Symmetry boundary conditions are applied at the edges of the model. Nodes between the jacking bolts and the locking ring, and nodes between locking ring threads and shell threads are coupled. The gap elements between the shield plug and the bottom of the jacking bolts have a very small positive interference to represent the pre-load on the bolts. Gap elements are used at the bottom of the model in order to simulate contact between the bottom plate and ground while allowing for bending and/or axial distortion of the bottom plate.

Load Case 1 analyses the 54g bare bottom end drop of the MCO with a 150 psi internal pressure, without the lifting cap. Load Case 2 uses the same model to analyze the 54g bare bottom end drop of the MCO with a 450 psi internal pressure, with the lifting cap. For load case 2, the lifting cap is not explicitly modeled. The load from the weight of the cap is applied to the top of the canister collar.

11.1.2 Bare Bottom End Drops (Load Cases 1 and 2)

Load Case 1 analyses the 54g bare bottom end drop of the MCO with a 150 psi internal pressure, without the lifting cap. Load Case 2 uses the same model to analyze the 54g bare bottom end drop of the MCO with a 450 psi internal pressure, with the lifting cap. For load case 2, the lifting cap is not explicitly modeled. The load from the weight of the cap is applied to the top of the canister collar as a pressure.

The bare bottom drop analysis is performed with hydrostatic pressure in addition to the design pressure (150 psi for load case 1 and 450 psi for load case 2). The load applied by the payload is modeled as a pressure exerted on the bottom plate of the MCO, and is equivalent to the weight of five loaded Mark IV baskets distributed over the area of the plate. It is;

$$A_p = \text{MCO Bottom Plate area} = \pi \times \frac{(23.00)^2}{4} = 415.48\ \text{in}^2$$

W_B= Maximum weight of a Mark IV basket = 3,200 lbs (see discussion below)

$$P_{bp} = \frac{5(W_B)(54g)}{A_p} = \frac{5 \times (3{,}200) \times (54g)}{415.48^2} = 2{,}079.5\ \text{psi}$$

The hydrostatic pressure described in Section Hydrostatic **Pressure** is applied, with the exception that the applied hydrostatic pressure is based on the previous maximum basket weight of 3,200 lb, rather than a bounding weight of 3,225 lb. Although non-conservative, the payload loads applied to the FEA analyses are based on 3,200 lb. The effect is less than 1%, and considering the low stress ratios, the effect is negligible. Boundary conditions are applied as described in Section 11.1.1.

11.1.3 CSB Tube Drop (Load Case 3)

Load case 3 analyses the impact of a MCO onto another MCO within a CSB tube. The top MCO impacts with a force of 28g. The analysis is performed by applying a pressure (14,162 psi, as defined in Section 10.4) to the top surface of the shield plug to simulate the impact of the top MCO onto the bottom MCO. The internal design pressure of 150 psi (without the lifting cap) is also applied. Boundary conditions are applied as described in Section 11.1.1.

11.2 Model (Load Case 4)

This model is half-symmetric (3-D) with SOLID45elements which have 8 node and 3 degrees of freedom at each node.

11.2.1 Boundary Conditions

The model has symmetry boundary conditions applied at the symmetry section cut. Nodes between the jacking bolts and the locking ring, and nodes between locking ring threads and shell threads are coupled. The gap elements between the shield plug and the bottom of the jacking bolts have a very small positive interference to represent the pre-load on the bolts. Gap elements are used at the bottom of the model in order to simulate contact between the bottom plate and ground while allowing for bending and/or axial distortion of the bottom plate.

11.2.2 CSB Tube Drop

Load case 4 analyses the impact of a MCO onto another MCO within a CSB tube. The top MCO impacts with a force of 28g. The analysis is performed by applying a pressure (1,769 psi, as defined in Section 10.4) to the top surface of the lifting cap to simulate the impact of the top MCO onto the bottom MCO. The internal design pressure of 150 psi (without the lifting cap) is also applied. Boundary conditions are applied as described in Section 11.1.1.

12. RESULTS

These analyses show that ASME Code allowables (Subsection NB and Appendix F) are not violated. The radial displacements due to the load cases and the pressure distribution are well within the allowables given by the MCO Performance Specification. The results are summarized in the following tables. Table 555 and Table 666 summarize where the stresses are linearized. Table 777 summarizes the maximum radial displacement of each analysis. The stress ratios in Table 888 through Table 111111 are calculated as the ratio of the maximum stress intensity to the allowed stress for that type of stress intensity. Table 11 is a summary of the maximum deflections of the filter guard plate under different load cases.

Table 5: ANSYS Model Stress Report Sections
Axisymmetric Model, Load Cases 1,2 & 3

Component	Section	Inside Node	Outside Node
Bottom Plate	1	1	41
	2	9	49
	3	10	50
Lower Shell	4	50	52
	5	1101	1103
	6	62	64
Middle Shell	7	134	135
	8	180	181
Upper Shell	9	202	204
	10	232	234
	11	249	261
	12	262	264
	13	274	279
	14	277	279
	15	292	294
Shield Plug	16	601	641
	17	601	613
	18	603	683
	19	606	706
	20	766	806
	21	768	808
	22	750	810
	23	736	815
	24	869	874
	25	870	875
Guard Plate	26	851	865
	27	1290	1260
	28	1282	1262
	29	1283	1263
	30	1274	1254
	31	1276	1256
Locking Ring	32	431	434
	33	406	426
	34	921	498
	35	404	424

Table 6: ANSYS Model Stress Report Sections
Half-Symmetric Model, Load Case 4

Component	Section①	Inside Node	Outside Node
Bottom Plate	1‡	1	41
	2	9	49
	3	10	50
Lower Shell	4	50	52
	5	1101	1103
	6	62	64
Middle Shell	7	134	135
	8	180	181
Upper Shell	9	202	204
	10	232	234
	11	249	261
	12	262	264
	13	274	279
	14	277	279
	15	292	294
Shield Plug	16‡	1940	55940
	17	1901	1913
	18	2068	2108
	19	2169	2174
Guard Plate	20	2509	2511
	21	2525	2528
	22	2549	2552
	23	2574	2583
	24	2500	2502
Locking Ring	25	1704	1724
	26	1721	1724
	27	1731	1734
Lifting Cap	28‡	1311	1301
	29‡	1349	1345
	30‡	1393	1389
	31‡	1437	1433
	32	1487	1485
	33	1477	1481
	34	1587	1591
	35	1598	1602
	36	1631	1635
	37	302	304

Notes: ① All sections listed are those defined at the 0° azimuth, and except those identified by ‡, are repeated at the 90° and 180° azimuth location

Table 7: Maximum Shell Radial Displacement and Circumference Change

Load Case	**1**	**2**	**3**	**4**
	54g Bottom End Drop without Lifting Cap	**54g Bottom End Drop with Lifting Cap**	**28g CSB Tube Drop Without Lifting Cap**	**28g CSB Tube Drop With Lifting Cap**
Max. Radial Displacement	0.0292	0.0320	0.0250	0.0481
Undeformed Shell Diameter	23.00 in.	23.00 in.	23.00 in.	23.00 in.
Max. Deformed Shell Diameter	23.0584	23.0640	23.0500	23.0962
Max. Calculated Circumference	72.44	72.46	72.41	72.56
Allowed Circumference	73.04 in.	73.04 in.	73.04 in.	73.04 in.

Table 8: Bare Bottom End Drop (54g), without Lifting Cap Summary of Maximum Stress Intensities (Load Case 1)

COMPONENT	Membrane Stress Intensities		Membrane + Bending Stress Intensities	
	Max SI	SR	Max SI	SR
Bottom Plate	3,344	0.07	7,161	0.11
Lower Shell	19,930	0.42	22,310	0.33
Middle Shell	5,735	0.12	5,815	0.09
Upper Shell/Collar	4,604	0.10	7,239	0.11
Shield Plug	7,322	0.18	9,016	0.15
Guard Plate	312.9	0.01	700.2	0.01
Locking Ring	1,727	0.04	2,229	0.03

T[A]able 9: Bare Bottom End Drop (54g) with Lifting Cap Summary of Maximum Stress Intensities (Load Case 2)

COMPONENT	Membrane Stress Intensities		Membrane + Bending Stress Intensities	
	Max SI	SR	Max SI	SR
Bottom Plate	3,933	0.08	8,441	0.13
Lower Shell	25,060	0.53	28,440	0.42
Middle Shell	10,710	0.23	10,950	0.16
Upper Shell/Collar	10,660	0.33[A]	11,160	0.24[A]
Shield Plug	5,749	0.14	8,296	0.14
Guard Plate	585	0.01	1,057	0.02
Locking Ring	2,099	0.05	2,703	0.04

[A] Stress ratio reflects the thickness ratio of the effective weld throat to the basic shell thickness (0.375 / 0.500 = 0.75) in conjunction with the 0.90 stress reduction factor per code case N-595A.1.b

Table 10: 28g CSB Tube Drop without Lifting Cap
Summary of Maximum Stress Intensities (Load Case 3)

COMPONENT	Membrane Stress Intensities		Membrane + Bending Stress Intensities	
	Max SI	SR	Max SI	SR
Bottom Plate	8,522	0.18	12,030	0.18
Lower Shell	16,930	0.36	19,730	0.29
Middle Shell	16,450	0.35	16,520	0.24
Upper Shell/Collar	16,630	0.35	17,760	0.26
Shield Plug	19,040	0.48	21,740	0.36
Guard Plate	5,776	0.14	9,496	0.16
Locking Ring	977	0.02	1,013	0.02

Table 11: 28g CSB Tube Drop with Lifting Cap
Summary of Maximum Stress Intensities (Load Case 4)

COMPONENT	Membrane Stress Intensities		Membrane + Bending Stress Intensities	
	Max SI	SR	Max SI	SR
Bottom Plate	11,850	0.25	19,040	0.28
Lower Shell	21,170	0.45	22,890	0.34
Middle Shell	20,640	0.44	20,850	0.31
Upper Shell/Collar	29,270	0.92[A]	39,080	0.86[A]
Shield Plug	1,477	0.04	3,230	0.05
Guard Plate	1,799	0.04	2,277	0.04
Locking Ring	8,373	0.21	12,990	0.22
Lifting Cap	27,880	0.70	33,180	0.55

[A] Stress ratio reflects the thickness ratio of the effective weld throat to the basic shell thickness (0.375 / 0.500 = 0.75) in conjunction with the 0.90 stress reduction factor per code case N-595A.1.b

Table 12: Summary of Guard Plate Maximum Deflections

Load Case		Maximum Plate Deflection (in.)
1	54g Bare Bottom End Drop without Cap	0.008
2	54g Bare Bottom End Drop with Cap	0.008
4	28g CSB Tube Drop with out Cap	0.007
5	28g CSB Tube Drop with Cap	0.008

12.1 Buckling

12.1.1 End Drop

The maximum compressive membrane stress is checked according to Paragraph NB-3133.6 of [3]. From the analyses using the models described in Section 11, the maximum compressive axial stress in the MCO shell occurs during the postulated drops is 15,620 psi. This result occurs during the CSB drop, with the end cap and zero internal pressure. The results are extracted from Load Step 2 of the ANSYS® analysis, of which the input file (CSBCAP.INP) is listed in Appendix A.

Per Paragraph NB-3133.6(b) of [3], the parameter A is:

$$A = \frac{0.125}{\frac{R_c}{T}} = 0.0052$$

Where the minimum thickness of the MCO Shell, T = 0.485 in. and the inside radius of the MCO Shell, R_c =11.50 in.

$$\frac{0.125}{\left(\frac{11.50}{0.485}\right)} = 0.0052$$

The corresponding value of B, obtained from HA-1 of [2], at 132°C (270°F) is 11,300 psi (interpolated value). Per paragraph F-1331.5 of [3], the allowable compressive stress is equal to 150% of B, or 16,950 psi. Since this value is greater than the computed compressive stress, the MCO shell meets the buckling criterion for an end drop.

As stated above, the maximum allowed compressive stress is 16,950 psi. Although, Tables 9 and 10 of Section 12 report maximum stress intensities greater than 16,950 psi, none of the compressive axial stresses exceed this value. $\frac{D_I + D_O}{4} = \frac{23.000 + 23.970}{4} = 11.743\text{ in}$ $\frac{L_\phi}{\sqrt{Rt}} = 58.56$ $\frac{L_\theta}{\sqrt{Rt}} = 30.92$

$$\frac{300\sigma_Y}{E} - 0.003 = 0.2536 \quad \frac{\alpha_{\phi L} \times \sigma_{\phi eL}}{\sigma_Y} \quad \frac{C_\phi Et}{R} = 597{,}250\text{psi} \quad \frac{1}{\Delta} = 0.154 \quad \frac{\alpha_{\phi L}\sigma_{\phi eL}}{FS}$$

$$\frac{\alpha_{\theta L}\sigma_{hel}}{FS} \quad \frac{\alpha_{\theta L}\sigma_{rel}}{FS} \quad \frac{\alpha_{\phi\theta}\sigma_{\phi\theta eL}}{FS} \quad \frac{C_{\theta h}Et}{R} \quad \frac{0.275t}{R} + \frac{2.1}{M_\phi^4}\left(\frac{R^3}{t}\right) = 0.0105 \quad \frac{C_{\theta r}Et}{R} \quad \frac{0.275t}{R} + \frac{2.1}{M_\phi^4}\left(\frac{R}{t}\right)^3 = 0.0128$$

$$\frac{C_{\phi\theta}Et}{R} \quad \frac{0.746}{\sqrt{M_\phi}} = 0.0942 \quad \frac{\sigma_\phi - 0.5\sigma_{ha}t_\theta / t_\phi}{\sigma_{xa} - 0.5\sigma_{ha}t_\theta / t_\phi} + \left(\frac{\sigma_\theta}{\sigma_{ha}}\right)^2 \leq 1.0 \quad \frac{\sigma_\phi}{\sigma_{xa}} + \left(\frac{\sigma_{\phi\theta}}{\sigma_{\tau a}}\right)^2 \leq 1.0$$

$$\frac{\sigma_\theta}{\sigma_{ra}} + \left(\frac{\sigma_{\phi\theta}}{\sigma_{\tau a}}\right)^2 \leq 1.0 \quad \frac{1}{\Delta} = 0.154 \quad \frac{1}{\Delta} = 0.154 \quad \frac{1.6}{\Delta} = 0.246 \quad \frac{\sigma_\phi}{\sigma_{xc}} \leq 1.0 \quad \frac{\sigma_\theta}{\sigma_{rc}} \leq 1.0$$

$$\frac{\sigma_\phi}{\sigma_{xc}} + \left(\frac{\sigma_{\phi\theta}}{\sigma_{\tau c}}\right)^2 \leq 1.0 \quad \frac{\sigma_\theta}{\sigma_{rc}} + \left(\frac{\sigma_{\phi\theta}}{\sigma_{\tau c}}\right)^2 \leq 1.0$$

14. SHELL BOTTOM WELD ANALYSIS

The Shell Bottom Assembly is a weldment consisting of the shell bottom with six basket support plates and a process tube guide cone welded to it. The evaluation was done to determine the attachment weld stresses. The loading condition is 450 psi internal pressure at 270(F. This is a Level D condition. The Basket Support Plate welds are double 5/16" fillets. The Process Tube Guide Cone welds are double 1/4" fillets.

The evaluation was done using a 3-D ANSYS model (MCObtm990204, listed below) of the various components. The model is a 30 degree symmetrical sector of the bottom plate (see Figure X). There are 6 basket support plate located radially at 60(intervals. The model includes from the radial centerline of one basket support to half way between two support plates. Solid45 3-D Structural Solid elements are used to create the components. The strength and properties of the 304L material are adjusted for the elevated temperature.

The model is the bottom 8" of an MCO. Enough of the shell wall is included to get beyond the end effects of the joint to the bottom plate. The top cut edge of the model is restrained in the vertical direction. The sides of the sector constrained as symmetrical boundaries.

The basket support plate and tube guide welds are modeled with solid elements. Both local and average weld stresses are evaluated. . None of these welds are any part of the pressure boundary. They are double fillet welds with dye penetrant inspection, Type V, category E, per

ASME NG3352.5. From Table NG-3352-1 the welds have a quality factor of 0.6. From Table 4, 304L has an allowable stress intensity limit at 270(F under level D conditions of 60.12 ksi. Thus the welds are limited to 0.6 (60.12) = 36.1 ksi.

The results of the analysis indicate a maximum stress intensity of 18,730 psi in the 5/16" basket support fillet weld. This occurs in a localized area at the lower corner at the inner end of the weld. The 1/4" tube guide fillet weld shows a maximum stress intensity of 28,299 psi at the top outer corner. Again this is a localized stress.

Weld	Allowable Limit	Applied stress	Stress Ratio
Basket support	36,100	18,730	0.52
Tube Guide	36,100	28,299	0.78

Thus all the Shell Bottom Assembly welds have an acceptable margin.

Appendix A:

Computer Run Output Sheets

&

Input File Listings

COMPUTER RUN COVER SHEET

Project Number:	KH-8009-8
Computer Code:	ANSYS®-PC
Software Version:	5.4
Computer System:	Windows NT 4.0, Pentium® II Processor
Computer Run File Number:	KH-8009-8-03
Unique Computer Run Filename:	CSBCAP.inp
Run Description:	MCO CSB Tube Drop with Lifting Cap
Creation Date / Time:	12 December 1998 16:06:44 AM

FOR JOE NICHOLS 2/9/99

Prepared By: Joseph C. Nichols Date

FOR MIKE COHEN 2/9/99

Checked By: Mike Cohen Date

REVISION	0	1	2		PAGE 33 OF 125
PREPARED BY / DATE	ZGS 4/17/97	ZGS 07/14/98	02/09/99		
CHECKED BY / DATE	JN 4/17/97	HA 07/14/98	02/09/99		

LISTING OF CSBCAP.INP FILE

```
fini
/cle
/FILENAM,CSBCAP
/PREP7
/TITLE, 132 DEGREES C, 450 psi PRESSURE, Bare Bottom End Drop
/COLOR,NUM,BLUE,1

TREF,70
TUNIF,270
ETAN=0.006                          ! Tangent modulus

/COM **** ELEMENT TYPES ****
ET,1,SOLID45                        ! Shell & Collar
ET,2,SOLID45               ! Lifting Cap
ET,3,45
ET,4,45
ET,5,45
ET,6,45
ET,7,52,,,,0,,,1                           ! Gap Elements
et,8,14
KEYOPT,8,2,0
KEYOPT,8,3,0


/COM ************* REAL CONSTANTS FOR GAP ELEMENTS *************
R,4,1.0e8,0.045,3.0               ! Shell/Shield Plug, Initially Open 0.045"
R,5,1.0e8,-2.75e-03               ! L. Ring/Shield Plug, Under Bolt, Preloaded
R,6,1.0e8,0,2.0                   ! Sealing Surface, closed
R,7,1.0e8,0,1.0                   ! Above Plug, Closed
R,8,2.42e7                        ! Seal Spring, Max. Stiffness
R,9,2.42e7/2                      ! Seal Spring, Max. Stiffness

R,10,1.0e8,0,1.0                   ! Above Plug, Closed


/COM ************* MATERIAL PROPERTIES *************
MP,DENS,1,490/1728                  ! 304L SS
MP,NUXY,1,0.3


/COM **** DEFINING TEMPERATURES FOR MPDATA ****
MPTEMP,1, 70,100,200,300,400,500
MPTEMP,7,600,650,700,750

/COM **** DEFINING ELASTIC MODULI FOR 304L & SA-193 ****
MPDATA,EX,1,1,28.3e+06,28.1e+06,27.6e+06,27.0e+06,26.5e+06,25.8e+06
MPDATA,EX,1,7,25.3e+06,25.1e+06,24.8e+06,24.5e+06

/COM **** MEAN COEFFICIENTS OF THERMAL EXPANSION (in./in./(F) ****
! SA240 Gr 304L
MPDATA,ALPX,1,1,0,8.55e-06,8.79e-06,9.00e-06,9.19e-06,9.37e-06
MPDATA,ALPX,1,7,9.53e-06,9.61e-06,9.69e-06,9.76e-06
```

```
/COM ************* SHELL GEOMETRY ****************
IR=11.49                       ! Internal Shell Radius @ Bottom
OR=12.000                       ! Shell Outside Radius @ Bottom
IR2 = 12.02                     ! Inside Radius at Collar Sealing Surface
OR2 = 12.655                    ! Outside Radius at Collar Sealing Surface
IR3 = 12.284                     ! Inside Radius at Collar-Lifting Ring Weld
IR4=12.174             ! Inside Radius

/COM **** BOTTOM  PLATE   [DWG SK-2-300378] ****
N,1,,-1.32                                  ! Row 1
N,2,1.25,-1.32
N,3,2.13,-1.32
N,10,11.423,-1.32
FILL

N,41,0.00,-0.19              ! Row 3
N,42,1.25,-0.19
N,43,2.13,0.69
N,50,IR,0.69
FILL,43,50
N,52,OR,0.69
FILL,50,52

FILL,1,41,1,21,1,10             ! Middle Row
FILL,10,50,1,30
N,32,12,-0.32
FILL,30,32
FILL,10,32,1,11
N,53,IR,1.17
N,55,OR,1.17                    ! Shell Stub/Weld
FILL,53,55
FILL,50,53,1,1101
FILL,51,54,1,1102
FILL,52,55,1,1103

/COM **** SHELL [DWGS SK-2-300379 & SK-2-300461] ****
N,65,IR,6.68
N,67,OR,6.68
FILL
FILL,53,65,3,,3,3,1
FILL,53,56,1,1104
FILL,55,58,1,1106
FILL,1104,1106
FILL,56,59,1,1107
FILL,58,61,1,1109
FILL,1107,1109
FILL,59,62,1,1110
FILL,61,64,1,1112
FILL,1110,1112
FILL,62,65,1,1113
FILL,64,67,1,1115
FILL,1113,1115

/COM **** SINGLE ROW SHELL ****
```

```
N,100,IR,7.18                    ! Inside
N,140,IR,71.68
N,180,IR,136.68
N,101,OR,7.18                    ! Outside
N,141,OR,71.68
N,181,OR,136.68
FILL,100,140,20,,2,2,1,2.0
FILL,140,180,19,,2,2,1,.5
FILL,100,102,2,1116,2
FILL,102,104,2,1120,2
FILL,104,106,2,1124,2
FILL,106,108,2,1128,2
FILL,108,110,2,1132,2
FILL,110,112,2,1136,2
FILL,112,114,2,1140,2
FILL,114,116,2,1144,2
NGEN,2,1,1116,1146,2,0.50

/COM **** DOUBLE ROW SHELL ****
N,190,IR,137.18                  ! Transition to Double Row
N,192,OR,137.18
FILL

/COM **** BASE OF CASK THROAT--ELEVATION: 138 INCHES ****
N,217,IR,142.68                    ! Transition to Double Row
N,219,OR,142.68
FILL
FILL,190,217,8,,3,3,1           ! Vertical Fill

/COM **** BOTTOM OF COLLAR TRANSITION ****
N,235,IR,146.06                    ! Start of Transition to Large O.D &
N,237,OR,146.06                    ! Assumed Location of Shield Plug Taper
FILL
N,238,IR,146.68
N,240,OR,146.68
FILL                            ! Horizontal Fill
FILL,217,235,5,,3,3,1           ! Vertical Fill

/COM **** TOP OF COLLAR TRANSITION ****
N,241,IR,147.31                 ! End of Transition to Large O.D &
N,243,OR,147.31                 ! Assumed Location of Shield Plug Taper
FILL                            ! Horizontal Fill
NGEN,2,3,241,243,1,,0.75

/COM **** COLLAR SEALING SURFACE ****
N,247,IR,149.63                 ! Inside Radius of Sealing Surface
N,249,IR2,149.63                ! Outside Radius at Sealing Surface
FILL                            ! Horizontal Fill

/COM **** THICK WALL AT COLLAR TRANSITION ****
NGEN,2,10,240,249,3             ! Nodes 250-259 Coincident w/240-249 (by 3)
N,255,OR2,147.31                ! Outside Surface
N,261,OR2,149.63                ! Outside Surface
N,258,OR2,148.06
N,980,IR,149.38
N,981,11.755,149.38
```

```
N,982,IR2,149.38
N,983,12.317,149.38
N,984,OR2,149.38
N,990,OR2,146.68
FILL,240,990,1,251
NGEN,2,5,980,984,1,,-0.66
FILL,246,258,1,257
FILL,253,255,1,,1,3,3
FILL,237,990,1,991

/COM **** COLLAR AT BOTTOM EDGE OF PLUG (.155" above Sealing Surface) ****
NGEN,2,3,259,,,,0.175             ! Nodes 262

/COM **** COLLAR AT TOP EDGE OF PLUG (1.44" above bottom Edge) ****
NGEN,2,9,262,,,,1.655            ! Nodes 271
FILL,262,271,2
NGEN,3,1,259,271,1,(OR2-IR2)/2

/COM **** COLLAR AT BASE OF THREADS ****
N,274,IR4,151.58
N,1000,IR2,151.58

/COM **** TOP TO COLLAR (WELD CLOSURE) ****
N,277,IR4,152.26
N,280,IR4,152.95
N,283,IR4,153.63
N,286,IR4,154.32
N,289,IR4,154.725
N,290,12.47,154.725
N,291,OR2,154.725
N,292,IR3,155.30
N,295,IR3,155.875
N,300,IR3,154.725
N,302,IR3,155.745
N,304,OR2,155.745
FILL,302,304
NGEN,2,1,274,289,3,0.27
NGEN,2,1,275,290,3,0.211
NGEN,3,1,292,295,1,(OR2-IR3)/2

/COM            CHANGING TO LOCAL COORDINATE SYSTEM
LOCAL,30,1,,,,,90         ! Cylindrical Coordinate for Nodal Sweep Pattern


/COM ************* NODAL GENERATION 60 DEGREE SWEEP *************
NGEN,19,3000,1,1700,1,,-10                   ! 5 Degree Increments

NDELE,3041,108041,3000                ! Deleting Extra Nodes at Bottom Plate Axis
NDELE,3021,108021,3000
NDELE,3001,108001,3000
NDELE,4300,109300,3000
NDELE,4299,109299,3000                ! Deleting  Nodes at Lifting Cap Axis
```

```
/COM ************* ELEMENT GENERATION *************
/COM ************* SHELL *************

TYPE,1              ! SOLID45 - 8 Node Brick
E,2,3002,1,1,22,3022,21,21        ! Bottom Plate
*repeat,18,3000,3000,,,3000,3000,,

E,22,3022,21,21,42,3042,41,41
*repeat,18,3000,3000,,,3000,3000,,

E,23,42,22,22,3023,3042,3022,3022
E,3,23,22,22,3003,3023,3022,3022
E,2,3,22,22,3002,3003,3022,3022
EGEN,18,3000,-3
E,3,4,3004,3003,23,24,3024,3023
EGEN,7,1,-1
EGEN,18,3000,-7
E,23,43,42,42,3023,3043,3042,3042
EGEN,18,3000,-1
E,23,24,3024,3023,43,44,3044,3043
EGEN,9,1,-1
EGEN,18,3000,-9
E,10,11,3011,3010,30,31,3031,3030
EGEN,18,3000,-1
E,32,11,31,31,3032,3011,3031,3031
EGEN,18,3000,-1
E,50,51,3051,3050,1101,1102,4102,4101         ! Bottom Shell
EGEN,5,3,-1
EGEN,18,3000,-5
E,1101,1102,4102,4101,53,54,3054,3053
EGEN,5,3,-1
EGEN,18,3000,-5
E,51,52,3052,3051,1102,1103,4103,4102
EGEN,5,3,-1
EGEN,18,3000,-5
E,1102,1103,4103,4102,54,55,3055,3054
EGEN,5,3,-1
EGEN,18,3000,-5
E,100,65,66,66,3100,3065,3066,3066
EGEN,18,3000,-1
E,67,101,66,66,3067,3101,3066,3066
EGEN,18,3000,-1
E,100,101,66,66,3100,3101,3066,3066
EGEN,18,3000,-1
E,100,101,3101,3100,1116,1117,4117,4116
EGEN,18,3000,-1
E,1116,1117,4117,4116,1118,1119,4119,4118
EGEN,8,4,-1
EGEN,18,3000,-8
E,1118,1119,4119,4118,102,103,3103,3102
*repe,8,4,4,4,4,2,2,2,2
EGEN,18,3000,-8
e,102,103,3103,3102,1120,1121,4121,4120
*repe,7,2,2,2,2,4,4,4,4
EGEN,18,3000,-7
```

```
E,116,117,3117,3116,118,119,3119,3118
EGEN,32,2,-1
EGEN,18,3000,-32
E,180,190,191,191,3180,3190,3191,3191
EGEN,18,3000,-1
E,180,181,191,191,3180,3181,3191,3191
EGEN,18,3000,-1
E,181,192,191,191,3181,3192,3191,3191
EGEN,18,3000,-1
E,190,191,3191,3190,193,194,3194,3193
EGEN,18,3,-1
EGEN,18,3000,-18
E,191,192,3192,3191,194,195,3195,3194
EGEN,18,3,-1
EGEN,18,3000,-18
E,244,245,3245,3244,985,986,3986,3985
EGEN,2,1,-1
EGEN,18,3000,-2
E,985,986,3986,3985,980,981,3981,3980
EGEN,2,1,-1
EGEN,18,3000,-2
E,980,981,3981,3980,247,248,3248,3247          ! Sealing Surface
EGEN,2,1,-1
EGEN,18,3000,-2
E,251,991,990,990,3251,3991,3990,3990          ! Transition at Collar
EGEN,18,3000,-1
E,237,991,3991,3237,250,251,3251,3250
EGEN,18,3000,-1
E,250,251,3251,3250,253,254,3254,3253
EGEN,2,3,-1
EGEN,18,3000,-2
E,251,990,3990,3251,254,255,3255,3254
EGEN,18,3000,-1
E,254,255,3255,3254,257,258,3258,3257
EGEN,18,3000,-1
E,256,257,3257,3256,987,988,3988,3987
EGEN,18,3000,-1
E,257,258,3258,3257,988,989,3989,3988
EGEN,18,3000,-1
E,988,989,3989,3988,983,984,3984,3983
EGEN,18,3000,-1
E,987,988,3988,3987,982,983,3983,3982
EGEN,18,3000,-1
E,982,983,3983,3982,259,260,3260,3259
EGEN,18,3000,-1
E,983,984,3984,3983,260,261,3261,3260
EGEN,18,3000,-1
E,259,260,3260,3259,262,263,3263,3262
EGEN,9,3,-1
EGEN,18,3000,-9
E,1000,274,271,271,4000,3274,3271,3271
EGEN,18,3000,-1
E,260,261,3261,3260,263,264,3264,3263
EGEN,11,3,-1
EGEN,18,3000,-11
E,286,287,3287,3286,300,290,3290,3300
```

```
EGEN,18,3000,-1
E,300,290,3290,3300,292,293,3293,3292
EGEN,18,3000,-1
E,300,289,286,286,3300,3289,3286,3286
EGEN,18,3000,-1
E,292,293,3293,3292,302,303,3303,3302
E,293,294,3294,3293,303,304,3304,3303
!E,302,303,3303,3302,295,296,3296,3295
!E,303,304,3304,3303,296,297,3297,3296
EGEN,18,3000,-2

/COM **** LIFTING CAP GEOMETRY ****
CAP1=9.375           ! Outside Radius Inside Lip
CAP2=10.19           ! Outside Radius at Lip
CAP3=9.625           ! Outside Radius at Chamfer Below Lip (Transition)
CAP4=12.655          ! Outside Radius at Shell
LOCAL,25,0,,164.745      ! Local System at Top Left Corner of Cap (Centerline of Cap)

! Start Center Port
N,1301,0,-3.545
N,1305,0,-2.25
fill
N,1307,0,-1.56
fill,1305,1307
n,1311,0,0
fill,1307,1311

ngen,5,11,1301,1309,,2.765/4
ngen,5,11,1310,,,2.765/4,.12/4
ngen,5,11,1311,,,2.765/4
ngen,3,11,1345,1349,,1.073/2
!nsel,s,node,,1334,1344
!nmodif,all,2.505
!alls
LOCAL,25,1,4.515,164.745,,,90        ! Local System at Top Left Corner of Cap (Centerline of
Cap)
ngen,9,11,1345,1367,,,180/8

csys,0

ngen,5,11,1433,,,2.631/4
ngen,5,11,1434,,,(2.631+.18255)/4,-.12/4
ngen,5,11,1435,,,(2.631+2*.18255)/4,.03/2
ngen,5,11,1436,,,(2.631+3*.18255)/4,.06/2
ngen,5,11,1437,,,3.360/4,.12/4
ngen,5,11,1438,,,(3.360-.125)/4,.06/4
ngen,5,11,1439,,,(3.110)/4
ngen,5,11,1440,,,(3.110)/4 ,-.22/8
ngen,5,11,1441,,,(3.110)/4,-.22/4
ngen,5,11,1442,,,(3.110)/4,-.22/8
ngen,5,11,1443,,,(3.110)/4
ngen,4,11,1485,1487,,(0.815)/3
local,41,1,8.896,164.75-6.325
ngen,8,11,1477,,,,-71.109/7

csys,0
```

```
dsys,0
ngen,4,11,1554,,,.558/3,-1.632/3

ngen,5,11,1481,,,(3.03)/4
ngen,7,11,1525,,,,-(4.927)/6

n1=1488
n2=1492
*do,i,1,10,1
  fill,n1,n2
  n1=n1+11
  n2=n2+11
*enddo



ngen,2,11,1587,,,0.04,-.243
ngen,2,11,1591,,,0.00,-.243
fill,1598,1602
ngen,4,11,1598,1602,,0.00,-1.343/3
ngen,2,11,1631,1635,,0.00,-.358

*get,nx1,node,295,loc,x
*get,nx2,node,1642,loc,x
nmodif,1643,(nx1-nx2)/2+nx2
nmodif,1644,nx1
*get,nx1,node,296,loc,x
nmodif,1645,nx1


/COM            CHANGING TO LOCAL COORDINATE SYSTEM
LOCAL,30,1,,,,,-90          ! Cylindrical Coordinate for Nodal Sweep Pattern
cscir,30,1
/COM ************* NODAL GENERATION 60 DEGREE SWEEP *************


ngen,2,18*3000,1301,1646,,,180
nsel,s,node,,55356,55432s
nmod,all,,180

alls
csys,0

nnum=55466
*do,i,1,11,1
  *get,nx,node,nnum,loc,x
  nmod,nnum,nx-.2
  nnum=nnum+1
*enddo

fill,55301,55466,14,,11,11,1,.7

alls

/pnum,node,0
csys,30
```

```
alls
fill,1301,55301,17,,3000,11,1,1
fill,1312,55312,17,,3000,11,1,1
fill,1323,55323,17,,3000,11,1,1
fill,1334,55334,17,,3000,11,1,1
fill,1345,55345,17,,3000,11,1,1
fill,1356,55356,17,,3000,11,1,1
fill,1367,55367,17,,3000,11,1,1
fill,1378,55378,17,,3000,11,1,1
fill,1389,55389,17,,3000,11,1,1
fill,1399,55399,17,,3000,11,1,1
fill,1400,55400,17,,3000,11,1,1
fill,1411,55411,17,,3000,11,1,1
fill,1422,55422,17,,3000,11,1,1
fill,1433,55433,17,,3000,11,1,1
fill,1444,55444,17,,3000,11,1,1
fill,1455,55455,17,,3000,11,1,1
fill,1466,55466,17,,3000,11,1,1
fill,1477,55477,17,,3000,11,1,1
fill,1496,55496,17,,3000,3,1,1
fill,1507,55507,17,,3000,3,1,1
fill,1518,55518,17,,3000,3,1,1
fill,1488,55488,17,,3000,5,1,1
fill,1499,55499,17,,3000,5,1,1
fill,1510,55510,17,,3000,5,1,1
fill,1521,55521,17,,3000,5,1,1
fill,1532,55532,17,,3000,5,1,1
fill,1543,55543,17,,3000,5,1,1
fill,1554,55554,17,,3000,5,1,1
fill,1565,55565,17,,3000,5,1,1
fill,1576,55576,17,,3000,5,1,1
fill,1587,55587,17,,3000,5,1,1
fill,1598,55598,17,,3000,5,1,1
fill,1609,55609,17,,3000,5,1,1
fill,1620,55620,17,,3000,5,1,1
fill,1631,55631,17,,3000,5,1,1
fill,1642,55642,17,,3000,5,1,1


csys,0
nsel,s,node,,4345,4355
nnum=4345
*do,i,1,11,1
  *get,nx,node,nnum,loc,x
  nmod,nnum,nx-.2
  nnum=nnum+1
*enddo
alls
csys,30
fill,4345,55345,16,,3000,11,1,1

csys,0
nsel,s,node,,4422,4432
nnum=4422
*do,i,1,11,1
  *get,nx,node,nnum,loc,x
```

```
  *get,nz,node,nnum,loc,z
  nmod,nnum,nx+.15,,nz+.1
  nnum=nnum+1
*enddo
alls
csys,30
fill,4422,55422,16,,3000,11,1,1

csys,0
nsel,s,node,,4433,4443
nnum=4433
*do,i,1,11,1
  *get,nx,node,nnum,loc,x
  *get,nz,node,nnum,loc,z
  nmod,nnum,nx+.25,,nz-.2
  nnum=nnum+1
*enddo
alls
csys,30
fill,4433,55433,16,,3000,11,1,.9

nsel,s,loc,y,25
nsel,r,loc,x,9.370,10.2
nsel,r,loc,z,163.7,164.8
nmod,all,,24.479

nsel,s,loc,y,35
nsel,r,loc,x,9.370,10.2
nsel,r,loc,z,163.7,164.8
nmod,all,,35.521

nsel,s,loc,y,25+60
nsel,r,loc,x,9.370,10.2
nsel,r,loc,z,163.7,164.8
nmod,all,,24.479+60

nsel,s,loc,y,35+60
nsel,r,loc,x,9.370,10.2
nsel,r,loc,z,163.7,164.8
nmod,all,,35.521+60

nsel,s,loc,y,25+2*60
nsel,r,loc,x,9.370,10.2
nsel,r,loc,z,163.7,164.8
nmod,all,,24.479+2*60

nsel,s,loc,y,35+2*60
nsel,r,loc,x,9.370,10.2
nsel,r,loc,z,163.7,164.8
nmod,all,,35.521+2*60

alls

type,2
!e,i,j,k,l,m,n,o,p
alls
```

```
esel,u,type,,1
e,1323,4323,4312,1312,1324,4324,4313,1313
egen,10,1,all
egen,15,11,all
egen,4,11,3497,3498
egen,16,11,3489,3492
egen,18,3000,all

e,1312,4312,1301,1301,1313,4313,1302,1302
*repeat,18,3000,3000,,,3000,3000,,
egen,10,1,-18




csys,0
nsel,s,loc,z,0
nplo

alls
numm,node
nsle
nsel,inve
ndele,all


/COM ************* LOCKING & LIFTING RING GEOMETRY *************
RING1=7.8775               ! Inner Radius
RING2=9.375          ! Inside Lip
RING3=9.625          ! Inside Lip, Bottom of Transition
RING4=10.19          ! Outside Lip
RING5=12.065         ! Outside Radius No Threads
RING6=12.174         ! Outside Radius
LOCAL,15,0,,151.58                ! Local System z=0 at Base of Lifting Ring

/COM **** TOP EDGE ****
N,1701,RING1,6.50
CSYS,0
N,1704,RING2,158.08
FILL,1701,1704,,s,1
N,1705,9.53,158.08
N,2200,9.75,158.08
N,2201,9.97,158.08
N,1706,RING4,158.08


/COM **** LIFTING SURFACE ****
CSYS,15
N,1721,RING1,5.50
N,1724,RING2,5.50
FILL,1721,1724
N,1725,9.53,5.50
N,2204,9.75,5.50
N,2205,9.97,5.50
N,1726,RING4,5.50
FILL,1701,1721,1,,10,6,1
```

```
FILL,2200,2204,1,2202
FILL,2201,2205,1,2203
N,1731,RING1,6.50-1.56
N,1734,RING2,6.50-1.56
FILL

/COM **** BOLTING SURFACE ****
N,1741,RING1,4.37
N,1744,RING3,4.37
FILL
NGEN,2,10,1741,1744,,,-0.38
NGEN,2,10,1751,1754,,,-0.64
NGEN,2,10,1761,1764,,,-0.61
NGEN,2,10,1771,1774,,,-0.69
NGEN,2,10,1781,1784,,,-0.68
NGEN,2,10,1791,1794,,,-0.69
NGEN,2,10,1801,1804,,,-0.68
N,1745,10.875-0.75,4.37              ! Inside Edge of Bolt Hole
N,1747,10.875+0.75,4.37              ! Outside Edge of Bolt Hole
FILL
N,2210,10.875-0.75,4.37       ! Double Nodes @ Bolt for Gap elements
N,2211,10.875+0.75,4.37
N,2212,10.875-0.75,3.99
N,2213,10.875+0.75,3.99
N,1755,10.875-0.75,3.99
N,1757,10.875+0.75,3.99
FILL,1755,1757
N,2214,10.875-0.75,3.35
N,2215,10.875+0.75,3.35
N,1765,10.875-0.75,3.35
N,1767,10.875+0.75,3.35
FILL,1765,1767
N,2216,10.875-0.75,2.74
N,2217,10.875+0.75,2.74
N,1775,10.875-0.75,2.74
N,1777,10.875+0.75,2.74
FILL,1775,1777
N,2218,10.875-0.75,2.05
N,2219,10.875+0.75,2.05
N,1785,10.875-0.75,2.05
N,1787,10.875+0.75,2.05
FILL,1785,1787
N,2220,10.875-0.75,1.37
N,2221,10.875+0.75,1.37
N,1795,10.875-0.75,1.37
N,1797,10.875+0.75,1.37
FILL,1795,1797
N,2222,10.875-0.75,0.68
N,2223,10.875+0.75,0.68
N,1805,10.875-0.75,0.68
N,1807,10.875+0.75,0.68
FILL,1805,1807
N,2224,10.875-0.75,0.00
N,2225,10.875+0.75,0.00
N,1815,10.875-0.75,0.00
N,1817,10.875+0.75,0.00
```

```
FILL,1815,1817
N,1825,10.125,-0.105           ! Bottom of Bolt Extension
N,1827,11.625,-0.105
FILL,1825,1827




/COM ****CHAMFER  AND THREADS****
N,1748,RING5-.22,4.37               ! O.D of Ring at Chamfer
N,1758,RING5,3.99
N,1769,RING5,3.35
N,1768,RING6,3.35          ! Top of Threads
N,1779,RING6,3.145
N,1778,RING6,2.74
N,1788,RING6,2.05
N,1798,RING6,1.37
N,1808,RING6,0.68
N,1818,RING6,0.00          ! Bottom of Threads


/COM ************* SHIELD PLUG *************
PLUGR1=11.975
PLUGR2=11.45
PLUGR3=11.25
PLUGR4=7.8775
LOCAL,20,0,,158.21          ! Local System z=0 at Top Left of Shield Plug

/COM **** NODES AT PLUG AXIS (r=0) ****
N,1901
N,1902,0,-1
N,1903,0,-1.994
N,1906,0,-4.994
FILL,1903,1906,2,1904,1
N,1907,0,-6.75
N,1910,0,-8.405
FILL,1907,1910,2,1908,1
N,1911,0,-9.374
N,1913,0,-10.5
FILL,1911,1913

/COM **** NODAL GENERATION ****
NGEN,2,13,1901,1913,1,0.273
NGEN,2,13,1914,1926,1,0.8825-0.273
NGEN,2,13,1927,1939,1,0.8825              ! Id Large Opening
NGEN,2,13,1940,1952,1,0.6875
NGEN,2,13,1953,1965,1,0.6875             ! Id Medium Opening
NGEN,2,13,1966,1978,1,0.4235             ! Id Small Opening
NGEN,2,10,1982,1991,1,0.9515             ! Center of Opening

ndele,1926

N,2030,5.4665,-1.994                    ! Od Small Opening
N,2036,5.4665,-4.994
FILL,2030,2036,5,2031,1
N,2037,5.4665,-6.75
```

```
N,2040,5.4665,-8.405
FILL,2037,2040,2,2038,1
N,2041,5.4665,-9.374
N,2043,5.4665,-10.5
FILL,2041,2043
N,2048,5.89,-1.0
NGEN,2,20,2030,2043,1,0.4235
FILL,2048,2050
N,2066,7.265,0
NGEN,2,20,2048,2063,1,1.375
FILL,2066,2068
N,2086,7.571,0.00
N,2087,7.571,-0.50
N,2088,7.571,-1
N,2089,7.571,-1.55
N,2090,7.571,-2.10
N,2091,7.571,-2.60
N,2092,7.571,-3.10
N,2093,7.571,-3.60
N,2094,7.571,-4.10
N,2095,7.571,-4.90
N,2096,7.571,-5.55
N,2097,7.571,-6.75
N,2106,PLUGR4-.05,0.00
N,1850,PLUGR4-.05,-0.13
N,2107,PLUGR4-.05,-0.63
N,2108,PLUGR4-.05,-1.13
N,2109,PLUGR4-.05,-1.69
N,2110,PLUGR4-.05,-2.26
N,2111,PLUGR4-.05,-2.64
N,2112,PLUGR4-.05,-3.28
N,2113,PLUGR4-.05,-3.89
N,2114,PLUGR4-.05,-4.58
N,2115,PLUGR4-.05,-5.26
N,2116,PLUGR4-.05,-5.95
N,2117,PLUGR4-.05,-6.75



/COM **** UNDER LOCKING RING ****
N,2124,8.5017,-6.75
N,2127,8.5017,-8.405
FILL
N,2128,8.5017,-9.374
N,2130,8.5017,-10.5
FILL
NGEN,2,20,2078,2083,1,0.306
NGEN,2,20,2098,2103,1,0.3065
NGEN,3,7,2124,2130,1,0.5616
NGEN,2,7,2138,2144,1,0.5001
NGEN,2,7,2145,2151,1,0.750       ! Under Bolt
N,2159,11.625,-6.75
N,2160,11.625,-7.302
N,2161,11.625,-7.854
N,2162,PLUGR2,-8.405
```

```
N,2300,PLUGR2,-8.83  !Used to be node 1100

N,2163,PLUGR2,-9.374
N,2165,PLUGR3,-10.5
FILL,2163,2165
N,2166,PLUGR1-0.27,-6.75   ! Seal Tab
N,2169,PLUGR1-0.27,-8.405
FILL,2166,2169,2,2167,1
N,2170,PLUGR1-0.27,-8.56
NGEN,2,5,2166,2170,1,0.27



/COM **** FILTER GUARD PLATE ****
LOCAL,40,0,,147.71          ! Local System z=0 at Bottom Left of Shield Plug
PLATE1=0.273
PLATE2=0.6575
PLATE3=1.357
PLATE4=10.25
PLATE5=11.25

N,2500,PLATE4,-0.85
N,2502,PLATE5,-0.85
FILL
NGEN,5,3,2500,2502,,,-0.85
NGEN,2,3,2512,2514,,,-0.25
N,2521,PLATE4,-5.75
N,2522,10.75,-5.75
N,2523,10.915,-5.75
FILL,2515,2521,1,2518
FILL,2523,2517,1,2520
FILL,2516,2522,1,2519
N,2537,6.4375,-4.25
FILL,2512,2537,3,2525,4
N,2549,3.578,-4.25
FILL,2537,2549,2,2541,4
NGEN,2,1,2525,2549,4,,-0.25
NGEN,2,2,2526,2550,4,,-1.25
FILL,2526,2528,1,2527,,7,4
N,2553,2.625,-2.375
N,2554,2.625,-2.575
N,2556,2.625,-4.25
FILL,2554,2556
N,2557,2.625,-4.5
N,2559,2.625,-5.75
FILL,2557,2559
NGEN,2,10,2553,2559,1,-0.5
NGEN,2,10,2563,2569,1,-0.768
N,2583,0.6575,-2.375
N,2584,0.6575,-2.575
N,2560,2.125
N,2570,1.357
N,2580,0.6575
N,2590,0.273
NGEN,3,1,2560,2590,10,,-0.5625
```

```
alls
nsle
nsel,inve

csys,30
ngen,19,3000,1701,2592,1,,10

/COM **** COUPLING NODES ****
/COM **** BETWEEN LIFTING/LOCKING RING & SHELL ****
/COM **** BETWEEN BOLT & LOCKING RING ****
alls
nrot,all
cpnum=54
nnum1=1745
nnum2=2210
*DO,I,1,19
  CP,cpnum,Uz,nnum1,nnum2  ! Inner Nodes
  nnum1=nnum1+3000
  nnum2=nnum2+3000
  cpnum=cpnum+1
*ENDDO

nnum1=1745
nnum2=2210
*DO,I,1,19
  CP,cpnum,Ux,nnum1,nnum2  ! Inner Nodes
  nnum1=nnum1+3000
  nnum2=nnum2+3000
  cpnum=cpnum+1
*ENDDO

nnum1=1747
nnum2=2211
*DO,I,1,19
  CP,cpnum,Uz,nnum1,nnum2  ! Inner Nodes
  nnum1=nnum1+3000
  nnum2=nnum2+3000
  cpnum=cpnum+1
*ENDDO

nnum1=1747
nnum2=2211
*DO,I,1,19
  CP,cpnum,Ux,nnum1,nnum2  ! Inner Nodes
  nnum1=nnum1+3000
  nnum2=nnum2+3000
  cpnum=cpnum+1
*ENDDO

!
nnum1=1745
nnum2=2210
*DO,I,1,19
  *DO,j,1,7          ! Going Down The Bolt
    CP,cpnum,Uz,nnum1+10*j,nnum2+2*j
    cpnum=cpnum+1
```

```
  *ENDDO
  nnum1=nnum1+3000
  nnum2=nnum2+3000
*ENDDO


nnum1=1747
nnum2=2211
*DO,I,1,19
  *DO,j,1,7          ! Going Down The Bolt
    CP,cpnum,Uz,nnum1+10*j,nnum2+2*j
    cpnum=cpnum+1
  *ENDDO
  nnum1=nnum1+3000
  nnum2=nnum2+3000
*ENDDO


nnum1=1745
nnum2=2210
*DO,I,1,19
  *DO,j,1,7          ! Going Down The Bolt
    CP,cpnum,Ux,nnum1+10*j,nnum2+2*j
    cpnum=cpnum+1
  *ENDDO
  nnum1=nnum1+3000
  nnum2=nnum2+3000
*ENDDO

nnum1=1747
nnum2=2211
*DO,I,1,19
  *DO,j,1,7          ! Going Down The Bolt
    CP,cpnum,Ux,nnum1+10*j,nnum2+2*j
    cpnum=cpnum+1
  *ENDDO
  nnum1=nnum1+3000
  nnum2=nnum2+3000
*ENDDO

! Threads
nnum1=1779
nnum2=289
*DO,I,1,19
  CP,cpnum,Uz,nnum1,nnum2
  nnum1=nnum1+3000
  nnum2=nnum2+3000
  cpnum=cpnum+1
*ENDDO

! Threads
nnum1=1778
nnum2=286
*DO,I,1,19
  CP,cpnum,Uz,nnum1,nnum2
  nnum1=nnum1+3000
```

```
  nnum2=nnum2+3000
  cpnum=cpnum+1
*ENDDO

! Threads
nnum1=1788
nnum2=283
*DO,I,1,19
  CP,cpnum,Uz,nnum1,nnum2
  nnum1=nnum1+3000
  nnum2=nnum2+3000
  cpnum=cpnum+1
*ENDDO

! Threads
nnum1=1798
nnum2=280
*DO,I,1,19
  CP,cpnum,Uz,nnum1,nnum2
  nnum1=nnum1+3000
  nnum2=nnum2+3000
  cpnum=cpnum+1
*ENDDO

! Threads
nnum1=1808
nnum2=277
*DO,I,1,19
  CP,cpnum,Uz,nnum1,nnum2
  nnum1=nnum1+3000
  nnum2=nnum2+3000
  cpnum=cpnum+1
*ENDDO



/COM ************* LOCKING RING *************

TYPE,3
MAT,1                                        ! F304N

E,1711,1712,1702,1701,4711,4712,4702,4701                          ! Top Going Down and
EGEN,11,10,-1                                ! Left to Right
EGEN,3,1,-11
E,1714,1715,1705,1704,4714,4715,4705,4704
EGEN,2,1,-1
EGEN,2,10,-2
E,2202,2203,2201,2200,5202,5203,5201,5200
EGEN,2,2,-1
E,2203,1716,1706,2201,5203,4716,4706,5201
E,2205,1726,1716,2203,5205,4726,4716,5203
E,1754,2212,2210,1744,4754,5212,5210,4744
E,1764,2214,2212,1754,4764,5214,5212,4754
E,1774,2216,2214,1764,4774,5216,5214,4764
E,1784,2218,2216,1774,4784,5218,5216,4774
E,1794,2220,2218,1784,4794,5220,5218,4784
```

```
E,1804,2222,2220,1794,4804,5222,5220,4794
E,1814,2224,2222,1804,4814,5224,5222,4804
E,2213,1758,1748,2211,5213,4758,4748,5211
E,2215,1768,1758,2213,5215,4768,4758,5213
E,2217,1778,1768,2215,5217,4778,4768,5215
E,2219,1788,1778,2217,5219,4788,4778,5217
E,2221,1798,1788,2219,5221,4798,4788,5219
E,2223,1808,1798,2221,5223,4808,4798,5221
E,2225,1818,1808,2223,5225,4818,4808,5223
esel,s,type,,3
egen,18,3000,all


/COM ************* NITRONIC 60 BOLTS (MODELED AS RING) *************
TYPE,4
MAT,1                                          ! SA-193
E,1755,1756,1746,1745,4755,4756,4746,4745
EGEN,8,10,-1
E,1756,1757,1747,1746,4756,4757,4747,4746
EGEN,8,10,-1
esel,s,type,,4
egen,18,3000,all




/COM ************* SHIELD PLUG *************
TYPE,5
MAT,1                                          ! 304L

E,1915,4915,1902,1902,1914,4914,1901,1901
*repeat,18,3000,3000,,,3000,3000,,
EGEN,11,1,-18

E,1928,4928,4915,1915,1927,4927,4914,1914
*repeat,18,3000,3000,3000,3000,3000,3000,3000,3000
EGEN,11,1,-18

E,2590,5590,1913,1913,1925,4925,1912,1912
*repeat,18,3000,3000,,,3000,3000,,


E,2590,2580,5580,5590,1925,1938,4938,4925
*repeat,18,3000,3000,3000,3000,3000,3000,3000,3000

E,2580,1939,1938,1938,5580,4939,4938,4938
*repeat,18,3000,3000,3000,3000,3000,3000,3000,3000

E,1939,2570,1938,1938,4939,5570,4938,4938
*repeat,18,3000,3000,3000,3000,3000,3000,3000,3000

e,2570,1952,4952,5570,1938,1951,4951,4938
*repeat,18,3000,3000,3000,3000,3000,3000,3000,3000

E,1952,2560,1951,1951,4952,5560,4951,4951
*repeat,18,3000,3000,3000,3000,3000,3000,3000,3000
```

```
E,1941,4941,4928,1928,1940,4940,4927,1927
*repeat,18,3000,3000,3000,3000,3000,3000,3000,3000
EGEN,11,1,-18

e,1955,4955,4942,1942,1954,4954,4941,1941
*repeat,18,3000,3000,3000,3000,3000,3000,3000,3000
EGEN,10,1,-18


e,1968,4968,4955,1955,1967,4967,4954,1954
*repeat,18,3000,3000,3000,3000,3000,3000,3000,3000
EGEN,11,1,-18

e,1982,4982,4969,1969,1981,4981,4968,1968
*repeat,18,3000,3000,3000,3000,3000,3000,3000,3000
EGEN,10,1,-18

e,1965,4965,5560,2560,1964,4964,4951,1951
*repeat,18,3000,3000,3000,3000,3000,3000,3000,3000

e,1995,4995,4985,1985,1994,4994,4984,1984
*repeat,18,3000,3000,3000,3000,3000,3000,3000,3000
EGEN,7,1,-18

e,2037,5037,4995,1995,2036,5036,4994,1994
*repeat,18,3000,3000,3000,3000,3000,3000,3000,3000
EGEN,7,1,-18

e,2051,5051,5031,2031,2050,5050,5030,2030
*repeat,18,3000,3000,3000,3000,3000,3000,3000,3000
EGEN,13,1,-18

e,2069,5069,5049,2049,2068,5068,5048,2048
*repeat,18,3000,3000,3000,3000,3000,3000,3000,3000
EGEN,15,1,-18

e,2087,5087,5067,2067,2086,5086,5066,2066
*repeat,18,3000,3000,3000,3000,3000,3000,3000,3000
EGEN,17,1,-18

e,2086,1850,2106,2106,5086,4850,5106,5106
*repeat,18,3000,3000,3000,3000,3000,3000,3000,3000

e,2107,5107,5087,2087,1850,4850,5086,2086
*repeat,18,3000,3000,3000,3000,3000,3000,3000,3000

e,2108,5108,5088,2088,2107,5107,5087,2087
*repeat,18,3000,3000,3000,3000,3000,3000,3000,3000
EGEN,16,1,-18

e,2125,5125,5118,2118,2124,5124,5117,2117
*repeat,18,3000,3000,3000,3000,3000,3000,3000,3000
EGEN,6,1,-18
egen,6,7,-108
```

```
e,2167,5167,5160,2160,2166,5166,5159,2159
*repeat,18,3000,3000,3000,3000,3000,3000,3000,3000
EGEN,3,1,-18

e,2172,5172,5167,2167,2171,5171,5166,2166
*repeat,18,3000,3000,3000,3000,3000,3000,3000,3000
EGEN,4,1,-18



/COM ************* FILTER GUARD PLATE *************
TYPE,6
MAT,1

E,2500,2501,2158,2151,5500,5501,5158,5151
*repeat,18,3000,3000,3000,3000,3000,3000,3000,3000
E,2501,2502,2165,2158,5501,5502,5165,5158
*repeat,18,3000,3000,3000,3000,3000,3000,3000,3000
E,2503,2504,2501,2500,5503,5504,5501,5500
*repeat,18,3000,3000,3000,3000,3000,3000,3000,3000
EGEN,7,3,-18
E,2504,2505,2502,2501,5504,5505,5502,5501
*repeat,18,3000,3000,3000,3000,3000,3000,3000,3000
EGEN,7,3,-18

E,2526,2515,2512,2525,5526,5515,5512,5525
*repeat,18,3000,3000,3000,3000,3000,3000,3000,3000
E,2527,2518,2515,2526,5527,5518,5515,5526
*repeat,18,3000,3000,3000,3000,3000,3000,3000,3000
E,2528,2521,2518,2527,5528,5521,5518,5527
*repeat,18,3000,3000,3000,3000,3000,3000,3000,3000
e,2530,2526,2525,2529,5530,5526,5525,5529
*repeat,18,3000,3000,3000,3000,3000,3000,3000,3000
EGEN,3,1,-18
EGEN,6,4,-54

e,2557,2550,2549,2556,5557,5550,5549,5556
*repeat,18,3000,3000,3000,3000,3000,3000,3000,3000
EGEN,3,1,-18


e,2554,2553,2563,2564,5554,5553,5563,5564
*repeat,18,3000,3000,3000,3000,3000,3000,3000,3000
EGEN,6,1,-18
e,2561,2560,2570,2571,5561,5560,5570,5571
*repeat,18,3000,3000,3000,3000,3000,3000,3000,3000
EGEN,9,1,-18
e,2571,2570,2580,2581,5571,5570,5580,5581
*repeat,18,3000,3000,3000,3000,3000,3000,3000,3000
EGEN,4,1,-18
e,2581,2580,2590,2591,5581,5580,5590,5591
*repeat,18,3000,3000,3000,3000,3000,3000,3000,3000
EGEN,2,1,-18
```

```
csys,0
!Generate the element in the cap that were forgotten
nsel,s,node,,1345,1349
ngen,2,1300,all,,,1.072/2
nsel,s,node,,2645,2649
ngen,2,9,all,,,1.072/2


LOCAL,25,1,4.515,164.745,,,90        ! Local System at Top Left Corner of Cap (Centerline of
Cap)
nsel,s,node,,2645,2658
ngen,9,15,all,,,,180/8

type,2

e,1345,2645,2646,1346,1356,2660,2661,1357
*repeat,8,11,15,15,11,11,15,15,11
egen,4,1,-8

e,2645,2654,2655,2646,2660,2669,2670,2661
*repeat,8,15,15,15,15,15,15,15,15
egen,4,1,-8

/COM ************* CONTACT ELEMENTS *************
alls

/COM **** BETWEEN SHIELD PLUG & SHELL ****
TYPE,7
REAL,4
E,2171,271
E,2172,268
E,2173,265
E,2174,262
E,2300,980
egen,19,3000,-5


/COM **** BETWEEN SHIELD PLUG & SEAL LIP ****
TYPE,7
REAL,6
E,248,2170
E,249,2175
egen,19,3000,-2


TYPE,8
REAL,8
E,247,2162
E,248,2169
egen,19,3000,-2

esel,s,elem,,13392,13393
esel,a,elem,,13428,13429
emode,all,real,9
```

```
/COM **** UNDER THE BOLT ****
TYPE,7
REAL,5
E,2145,1825
E,2152,1826
E,2159,1827
egen,19,3000,-3

/COM **** BETWEEN LOCKING RING & PLUG ****
TYPE,7
REAL,4
E,1850,1701
E,2107,1711
E,2108,1721
E,2109,1731
E,2110,1741
E,2111,1751
E,2112,1761
E,2113,1771
E,2114,1781
E,2115,1791
E,2116,1801
egen,19,3000,-11

csys,0
ngen,2,60000,1,10,1,,-.1
csys,30
ngen,19,3000,60002,60010,1,,10
type,7
real,10
e,1,60001
egen,10,1,-1
egen,19,3000,-9

alls
nsle
nsel,inve
NDEL,ALL
esel,s,type,,1,2
nsle
numm,node,.002
alls
CSYS,0
NSEL,S,LOC,Z,0
D,ALL,Uy
NSEL,S,node,,60000,114010
D,ALL,all
ALLS
d,1,ux,0
alls

fini
/solu
acel,,1
neqit,50
nsubst,1,100,1
```

```
SOLCONTROL,ON,1
lswrite,1

/com  **** Apply the weight of the impacting MCO as a pressure ****
csys,0
NSEL,S,LOC,Y,164.74,164.76
sf,all,pres,1769                      ! 28g x 20,000 lb = 560,000 lb
                                      ! Shield Plug Area = 316.6 in^2
                                      ! P/A = 1,769 psi


alls
neqit,50
nsubst,2,100,2
SOLCONTROL,ON,1
lswrite,2


/com **** Apply Pressure Load  ****
prs=450

csys,30
esel,s,type,,1
nsle
nsel,r,loc,x,0,11.49
nsel,r,loc,z,.69,149.63
sf,all,pres,prs
nsle
nsel,r,loc,x,0,12.02
nsel,r,loc,z,149.63,151.58
sf,all,pres,prs
nsle
nsel,r,loc,x,0,12.174
nsel,r,loc,z,151.58,154.72
sf,all,pres,prs
nsle
nsel,r,loc,x,0,12.284
nsel,r,loc,z,154.72,155.75
sf,all,pres,prs

alls
nsel,s,node,,1301,1642,11
*do,j,1,18,1
  nsel,a,node,,1312+3000*j,1642+3000*j,11
*enddo
*do,j,1,5,1
  nsel,a,node,,2653+j,2773+j,15
*enddo
nsel,a,node,,2645,2765,5
sf,all,pres,prs

nsel,s,node,,2673,2763,15
prsf=prs*1.75*1.75*3.14159/4/9
f,all,fz,prsf

nsel,s,node,,2658
nsel,a,node,,2778
```

```
prsf=prs*1.75*1.75*3.14159/4/18
f,all,fz,prsf

alls
neqit,50
nsubst,2,100,2
SOLCONTROL,ON,1
lswrite,3




/SOLU
save
lssolve,1,3

/post1
set,first
i=0
j=i*9*3000
LPATH,1+j,41+j
PRSECT
LPATH,9+j,49+j
PRSECT
LPATH,10+j,50+j
PRSECT
LPATH,50+j,52+j
PRSECT
LPATH,1101+j,1103+j
PRSECT
LPATH,62+j,64+j
PRSECT
LPATH,134+j,135+j
PRSECT
LPATH,180+j,181+j
PRSECT
LPATH,202+j,204+j
PRSECT
LPATH,232+j,234+j
PRSECT
LPATH,249+j,261+j
PRSECT
LPATH,262+j,264+j
PRSECT
LPATH,274+j,276+j
PRSECT
LPATH,277+j,279+j
PRSECT
LPATH,292+j,294+j
PRSECT
LPATH,1940,1927,1914,1901,55914,55927,55940
PRSECT
LPATH,1901+j,1913+j
PRSECT
LPATH,2068+j,2108+j
PRSECT
```

```
LPATH,2169+j,2174+j
PRSECT
LPATH,2509+j,2511+j
PRSECT
LPATH,2525+j,2528+j
PRSECT
LPATH,2549+j,2552+j
PRSECT
LPATH,2574+j,2583+j
PRSECT
LPATH,2500+j,2502+j
PRSECT
LPATH,1704+j,1724+j
PRSECT
LPATH,1721+j,1724+j
PRSECT
LPATH,1731+j,1734+j
PRSECT
LPATH,1311,1301
PRSECT
LPATH,1349,1345
PRSECT
LPATH,1393,1389
PRSECT
LPATH,1437,1433
PRSECT
LPATH,1487+j,1485+j
PRSECT
LPATH,1477+j,1481+j
PRSECT
LPATH,1587+j,1591+j
PRSECT
LPATH,1598+j,1602+j
PRSECT
LPATH,1631+j,1635+j
PRSECT
LPATH,302+j,304+j
PRSECT

i=1
j=i*9*3000
LPATH,1+j,41+j
PRSECT
LPATH,9+j,49+j
PRSECT
LPATH,10+j,50+j
PRSECT
LPATH,50+j,52+j
PRSECT
LPATH,1101+j,1103+j
PRSECT
LPATH,62+j,64+j
PRSECT
LPATH,134+j,135+j
PRSECT
LPATH,180+j,181+j
```

```
PRSECT
LPATH,202+j,204+j
PRSECT
LPATH,232+j,234+j
PRSECT
LPATH,249+j,261+j
PRSECT
LPATH,262+j,264+j
PRSECT
LPATH,274+j,276+j
PRSECT
LPATH,277+j,279+j
PRSECT
LPATH,292+j,294+j
PRSECT
LPATH,1901+j,1913+j
PRSECT
LPATH,2068+j,2108+j
PRSECT
LPATH,2169+j,2174+j
PRSECT
LPATH,2509+j,2511+j
PRSECT
LPATH,2525+j,2528+j
PRSECT
LPATH,2549+j,2552+j
PRSECT
LPATH,2574+j,2583+j
PRSECT
LPATH,2500+j,2502+j
PRSECT
LPATH,1704+j,1724+j
PRSECT
LPATH,1721+j,1724+j
PRSECT
LPATH,1731+j,1734+j
PRSECT
LPATH,1311,1301
PRSECT
LPATH,1349,1345
PRSECT
LPATH,1393,1389
PRSECT
LPATH,1437,1433
PRSECT
LPATH,1487+j,1485+j
PRSECT
LPATH,1477+j,1481+j
PRSECT
LPATH,1587+j,1591+j
PRSECT
LPATH,1598+j,1602+j
PRSECT
LPATH,1631+j,1635+j
PRSECT
LPATH,302+j,304+j
```

```
PRSECT


i=2
j=i*9*3000
LPATH,1+j,41+j
PRSECT
LPATH,9+j,49+j
PRSECT
LPATH,10+j,50+j
PRSECT
LPATH,50+j,52+j
PRSECT
LPATH,1101+j,1103+j
PRSECT
LPATH,62+j,64+j
PRSECT
LPATH,134+j,135+j
PRSECT
LPATH,180+j,181+j
PRSECT
LPATH,202+j,204+j
PRSECT
LPATH,232+j,234+j
PRSECT
LPATH,249+j,261+j
PRSECT
LPATH,262+j,264+j
PRSECT
LPATH,274+j,276+j
PRSECT
LPATH,277+j,279+j
PRSECT
LPATH,292+j,294+j
PRSECT
LPATH,1901+j,1913+j
PRSECT
LPATH,2068+j,2108+j
PRSECT
LPATH,2169+j,2174+j
PRSECT
LPATH,2509+j,2511+j
PRSECT
LPATH,2525+j,2528+j
PRSECT
LPATH,2549+j,2552+j
PRSECT
LPATH,2574+j,2583+j
PRSECT
LPATH,2500+j,2502+j
PRSECT
LPATH,1704+j,1724+j
PRSECT
LPATH,1721+j,1724+j
PRSECT
LPATH,1731+j,1734+j
```

```
PRSECT
LPATH,1311,1301
PRSECT
LPATH,1349,1345
PRSECT
LPATH,1393,1389
PRSECT
LPATH,1437,1433
PRSECT
LPATH,1487+j,1485+j
PRSECT
LPATH,1477+j,1481+j
PRSECT
LPATH,1587+j,1591+j
PRSECT
LPATH,1598+j,1602+j
PRSECT
LPATH,1631+j,1635+j
PRSECT
LPATH,302+j,304+j
PRSECT

set,next
i=0
j=i*9*3000
LPATH,1+j,41+j
PRSECT
LPATH,9+j,49+j
PRSECT
LPATH,10+j,50+j
PRSECT
LPATH,50+j,52+j
PRSECT
LPATH,1101+j,1103+j
PRSECT
LPATH,62+j,64+j
PRSECT
LPATH,134+j,135+j
PRSECT
LPATH,180+j,181+j
PRSECT
LPATH,202+j,204+j
PRSECT
LPATH,232+j,234+j
PRSECT
LPATH,249+j,261+j
PRSECT
LPATH,262+j,264+j
PRSECT
LPATH,274+j,276+j
PRSECT
LPATH,277+j,279+j
PRSECT
LPATH,292+j,294+j
PRSECT
LPATH,1940,1927,1914,1901,55914,55927,55940
```

```
PRSECT
LPATH,1901+j,1913+j
PRSECT
LPATH,2068+j,2108+j
PRSECT
LPATH,2169+j,2174+j
PRSECT
LPATH,2509+j,2511+j
PRSECT
LPATH,2525+j,2528+j
PRSECT
LPATH,2549+j,2552+j
PRSECT
LPATH,2574+j,2583+j
PRSECT
LPATH,2500+j,2502+j
PRSECT
LPATH,1704+j,1724+j
PRSECT
LPATH,1721+j,1724+j
PRSECT
LPATH,1731+j,1734+j
PRSECT
LPATH,1311,1301
PRSECT
LPATH,1349,1345
PRSECT
LPATH,1393,1389
PRSECT
LPATH,1437,1433
PRSECT
LPATH,1487+j,1485+j
PRSECT
LPATH,1477+j,1481+j
PRSECT
LPATH,1587+j,1591+j
PRSECT
LPATH,1598+j,1602+j
PRSECT
LPATH,1631+j,1635+j
PRSECT
LPATH,302+j,304+j
PRSECT

i=1
j=i*9*3000
LPATH,1+j,41+j
PRSECT
LPATH,9+j,49+j
PRSECT
LPATH,10+j,50+j
PRSECT
LPATH,50+j,52+j
PRSECT
LPATH,1101+j,1103+j
PRSECT
```

```
LPATH,62+j,64+j
PRSECT
LPATH,134+j,135+j
PRSECT
LPATH,180+j,181+j
PRSECT
LPATH,202+j,204+j
PRSECT
LPATH,232+j,234+j
PRSECT
LPATH,249+j,261+j
PRSECT
LPATH,262+j,264+j
PRSECT
LPATH,274+j,276+j
PRSECT
LPATH,277+j,279+j
PRSECT
LPATH,292+j,294+j
PRSECT
LPATH,1901+j,1913+j
PRSECT
LPATH,2068+j,2108+j
PRSECT
LPATH,2169+j,2174+j
PRSECT
LPATH,2509+j,2511+j
PRSECT
LPATH,2525+j,2528+j
PRSECT
LPATH,2549+j,2552+j
PRSECT
LPATH,2574+j,2583+j
PRSECT
LPATH,2500+j,2502+j
PRSECT
LPATH,1704+j,1724+j
PRSECT
LPATH,1721+j,1724+j
PRSECT
LPATH,1731+j,1734+j
PRSECT
LPATH,1311,1301
PRSECT
LPATH,1349,1345
PRSECT
LPATH,1393,1389
PRSECT
LPATH,1437,1433
PRSECT
LPATH,1487+j,1485+j
PRSECT
LPATH,1477+j,1481+j
PRSECT
LPATH,1587+j,1591+j
PRSECT
```

```
LPATH,1598+j,1602+j
PRSECT
LPATH,1631+j,1635+j
PRSECT
LPATH,302+j,304+j
PRSECT


i=2
j=i*9*3000
LPATH,1+j,41+j
PRSECT
LPATH,9+j,49+j
PRSECT
LPATH,10+j,50+j
PRSECT
LPATH,50+j,52+j
PRSECT
LPATH,1101+j,1103+j
PRSECT
LPATH,62+j,64+j
PRSECT
LPATH,134+j,135+j
PRSECT
LPATH,180+j,181+j
PRSECT
LPATH,202+j,204+j
PRSECT
LPATH,232+j,234+j
PRSECT
LPATH,249+j,261+j
PRSECT
LPATH,262+j,264+j
PRSECT
LPATH,274+j,276+j
PRSECT
LPATH,277+j,279+j
PRSECT
LPATH,292+j,294+j
PRSECT
LPATH,1901+j,1913+j
PRSECT
LPATH,2068+j,2108+j
PRSECT
LPATH,2169+j,2174+j
PRSECT
LPATH,2509+j,2511+j
PRSECT
LPATH,2525+j,2528+j
PRSECT
LPATH,2549+j,2552+j
PRSECT
LPATH,2574+j,2583+j
PRSECT
LPATH,2500+j,2502+j
PRSECT
```

```
LPATH,1704+j,1724+j
PRSECT
LPATH,1721+j,1724+j
PRSECT
LPATH,1731+j,1734+j
PRSECT
LPATH,1311,1301
PRSECT
LPATH,1349,1345
PRSECT
LPATH,1393,1389
PRSECT
LPATH,1437,1433
PRSECT
LPATH,1487+j,1485+j
PRSECT
LPATH,1477+j,1481+j
PRSECT
LPATH,1587+j,1591+j
PRSECT
LPATH,1598+j,1602+j
PRSECT
LPATH,1631+j,1635+j
PRSECT
LPATH,302+j,304+j
PRSECT

set,last
i=0
j=i*9*3000
LPATH,1+j,41+j
PRSECT
LPATH,9+j,49+j
PRSECT
LPATH,10+j,50+j
PRSECT
LPATH,50+j,52+j
PRSECT
LPATH,1101+j,1103+j
PRSECT
LPATH,62+j,64+j
PRSECT
LPATH,134+j,135+j
PRSECT
LPATH,180+j,181+j
PRSECT
LPATH,202+j,204+j
PRSECT
LPATH,232+j,234+j
PRSECT
LPATH,249+j,261+j
PRSECT
LPATH,262+j,264+j
PRSECT
LPATH,274+j,276+j
PRSECT
```

```
LPATH,277+j,279+j
PRSECT
LPATH,292+j,294+j
PRSECT
LPATH,1940,1927,1914,1901,55914,55927,55940
PRSECT
LPATH,1901+j,1913+j
PRSECT
LPATH,2068+j,2108+j
PRSECT
LPATH,2169+j,2174+j
PRSECT
LPATH,2509+j,2511+j
PRSECT
LPATH,2525+j,2528+j
PRSECT
LPATH,2549+j,2552+j
PRSECT
LPATH,2574+j,2583+j
PRSECT
LPATH,2500+j,2502+j
PRSECT
LPATH,1704+j,1724+j
PRSECT
LPATH,1721+j,1724+j
PRSECT
LPATH,1731+j,1734+j
PRSECT
LPATH,1311,1301
PRSECT
LPATH,1349,1345
PRSECT
LPATH,1393,1389
PRSECT
LPATH,1437,1433
PRSECT
LPATH,1487+j,1485+j
PRSECT
LPATH,1477+j,1481+j
PRSECT
LPATH,1587+j,1591+j
PRSECT
LPATH,1598+j,1602+j
PRSECT
LPATH,1631+j,1635+j
PRSECT
LPATH,302+j,304+j
PRSECT

i=1
j=i*9*3000
LPATH,1+j,41+j
PRSECT
LPATH,9+j,49+j
PRSECT
LPATH,10+j,50+j
```

```
PRSECT
LPATH,50+j,52+j
PRSECT
LPATH,1101+j,1103+j
PRSECT
LPATH,62+j,64+j
PRSECT
LPATH,134+j,135+j
PRSECT
LPATH,180+j,181+j
PRSECT
LPATH,202+j,204+j
PRSECT
LPATH,232+j,234+j
PRSECT
LPATH,249+j,261+j
PRSECT
LPATH,262+j,264+j
PRSECT
LPATH,274+j,276+j
PRSECT
LPATH,277+j,279+j
PRSECT
LPATH,292+j,294+j
PRSECT
LPATH,1901+j,1913+j
PRSECT
LPATH,2068+j,2108+j
PRSECT
LPATH,2169+j,2174+j
PRSECT
LPATH,2509+j,2511+j
PRSECT
LPATH,2525+j,2528+j
PRSECT
LPATH,2549+j,2552+j
PRSECT
LPATH,2574+j,2583+j
PRSECT
LPATH,2500+j,2502+j
PRSECT
LPATH,1704+j,1724+j
PRSECT
LPATH,1721+j,1724+j
PRSECT
LPATH,1731+j,1734+j
PRSECT
LPATH,1311,1301
PRSECT
LPATH,1349,1345
PRSECT
LPATH,1393,1389
PRSECT
LPATH,1437,1433
PRSECT
LPATH,1487+j,1485+j
```

```
PRSECT
LPATH,1477+j,1481+j
PRSECT
LPATH,1587+j,1591+j
PRSECT
LPATH,1598+j,1602+j
PRSECT
LPATH,1631+j,1635+j
PRSECT
LPATH,302+j,304+j
PRSECT


i=2
j=i*9*3000
LPATH,1+j,41+j
PRSECT
LPATH,9+j,49+j
PRSECT
LPATH,10+j,50+j
PRSECT
LPATH,50+j,52+j
PRSECT
LPATH,1101+j,1103+j
PRSECT
LPATH,62+j,64+j
PRSECT
LPATH,134+j,135+j
PRSECT
LPATH,180+j,181+j
PRSECT
LPATH,202+j,204+j
PRSECT
LPATH,232+j,234+j
PRSECT
LPATH,249+j,261+j
PRSECT
LPATH,262+j,264+j
PRSECT
LPATH,274+j,276+j
PRSECT
LPATH,277+j,279+j
PRSECT
LPATH,292+j,294+j
PRSECT
LPATH,1901+j,1913+j
PRSECT
LPATH,2068+j,2108+j
PRSECT
LPATH,2169+j,2174+j
PRSECT
LPATH,2509+j,2511+j
PRSECT
LPATH,2525+j,2528+j
PRSECT
LPATH,2549+j,2552+j
```

```
PRSECT
LPATH,2574+j,2583+j
PRSECT
LPATH,2500+j,2502+j
PRSECT
LPATH,1704+j,1724+j
PRSECT
LPATH,1721+j,1724+j
PRSECT
LPATH,1731+j,1734+j
PRSECT
LPATH,1311,1301
PRSECT
LPATH,1349,1345
PRSECT
LPATH,1393,1389
PRSECT
LPATH,1437,1433
PRSECT
LPATH,1487+j,1485+j
PRSECT
LPATH,1477+j,1481+j
PRSECT
LPATH,1587+j,1591+j
PRSECT
LPATH,1598+j,1602+j
PRSECT
LPATH,1631+j,1635+j
PRSECT
LPATH,302+j,304+j
PRSECT

fini
```

COMPUTER RUN COVER SHEET

Project Number:	KH-8009-8
Computer Code:	ANSYS®-PC
Software Version:	5.4
Computer System:	Windows NT 4.0, Pentium® II Processor
Computer Run File Number:	KH-8009-8-03
Unique Computer Run Filename:	CSBCAP.out
Run Description:	MCO CSB Tube Drop with Lifting Cap
Run Date / Time:	18 December 1998 19:29:17 PM

FOR JOE NICHOLS 2/9/99

Prepared By: Joseph C. Nichols Date

FOR MIKE COHEN 2/9/99

Checked By: Mike Cohen Date

COMPUTER RUN COVER SHEET

Project Number:	KH-8009-8
Computer Code:	ANSYS®-PC
Software Version:	5.4
Computer System:	Windows NT 4.0, Pentium® II Processor
Computer Run File Number:	KH-8009-8-03
Unique Computer Run Filename:	CSB.inp
Run Description:	MCO CSB Tube Drop without Lifting Cap
Creation Date / Time:	17 December1998 13:26:35

FOR JOE NICHOLS 2/9/99

Prepared By: Joseph C. Nichols Date

FOR MIKE COHEN 2/9/99

Checked By: Mike Cohen Date

REVISION	0	1	2		PAGE 72
PREPARED BY / DATE	ZGS 4/17/97	ZGS 07/14/98	TSA 02/09/99		OF 125
CHECKED BY / DATE	JN 4/17/97	HA 07/14/98	02/09/99		

LISTING OF CSB.INP FILE

```
fini
/cle
/FILENAM,CSB
/PREP7
/TITLE,28g CSB DROP -132 DEGREES C, 150 psi PRESSURE, NO CAP
TREF,70
TUNIF,270

ETAN=0.006                    ! Tangent modulus

/COM ************* ELEMENT TYPES *************
ET,1,42,,,1                          ! Shell & Collar
ET,2,42,,,1                              ! Bolts
ET,3,42,,,1                    ! Locking Ring
ET,4,42,,,1                    ! Shield Plug & Guard Plate
ET,5,12                        ! Gap Elements
KEYOPT,5,7,1

/COM ************* REAL CONSTANTS FOR GAP ELEMENTS *************
R,4,-90,1.0e8,-0.045,3.0        ! Shell/Shield Plug, Initially Open 0.045"
R,5,0,1.0e8,2.75e-03          ! L. Ring/Shield Plug, Under Bolt, Preloaded
R,6,0,1.0e8,0,2.0              ! Sealing Surface, closed
R,7,0,1.0e8,0,1.0         !Bottom MCO Plate, Closed
R,8,0,2.42e7,0,2.0              ! Seal Spring, Max. Stiffness


/COM ************* MATERIAL PROPERTIES *************

/COM **** MATERIAL 1,  304L STAINLESS STEEL ****
MP,DENS,1,493/1728             ! 304L SS
MP,NUXY,1,0.3

/COM ** DEFINING TEMPERATURES (MPDATA) FOR 304L/304 **
MPTEMP,1, 70,100,200,300

/COM ** DEFINING ELASTIC MODULI FOR 304L/304 **
MPDATA,EX,1,1,28.3e+06,28.1e+06,27.6e+06,27.0e+06

/COM ** MEAN COEFFICIENTS OF THERMAL EXPANSION (in./in./(F) 304L/304 **
MPDATA,ALPX,1,1,8.46e-06,8.55e-06,8.79e-06,9.00e-06

/COM **** MATERIAL 2, SA-193 GRADE B8S ****
MP,DENS,2,473/1728
MP,NUXY,2,0.3

/COM ** DEFINING TEMPERATURES (MPDATA) FOR SA-193 **
MPTEMP,1,70,100,200,300

/COM ** DEFINING ELASTIC MODULI FOR SA-193 **
MPDATA,EX,2,1,28.3e+06,28.1e+06,27.6e+06,27.0e+06

/COM ** MEAN COEFFICIENTS OF THERMAL EXPANSION (in./in./(F) SA-193 **
MPDATA,ALPX,2,1,8.55e-06,8.79e-06,9.00e-06,9.19e-06
```

```
/COM ************* SHELL GEOMETRY ****************
IR=11.49                      ! Internal Shell Radius @ Bottom
OR=12.000                      ! Shell Outside Radius @ Bottom
IR2 = 12.02                    ! Inside Radius at Collar Sealing Surface
OR2 = 12.655                   ! Outside Radius at Collar Sealing Surface
IR3 = 12.284                    ! Inside Radius at Collar-Lifting Ring Weld
IR4=12.174           ! Inside Radius

/COM **** BOTTOM  PLATE   [DWG SK-2-300378] ****
N,1,,-1.32                             ! Row 1
N,2,1.25,-1.32
N,3,2.13,-1.32
N,10,11.423,-1.32
FILL

N,41,0.00,-0.19            ! Row 3
N,42,1.25,-0.19
N,43,2.13,0.69
N,50,IR,0.69
FILL,43,50
N,52,OR,0.69
FILL,50,52

FILL,1,41,1,21,1,10            ! Middle Row
FILL,10,50,1,30
N,32,12,-0.32
FILL,30,32
FILL,10,32,1,11
N,53,IR,1.17
N,55,OR,1.17                   ! Shell Stub/Weld
FILL,53,55
FILL,50,53,1,1101
FILL,51,54,1,1102
FILL,52,55,1,1103

/COM **** SHELL [DWGS SK-2-300379 & SK-2-300461] ****
N,65,IR,6.68
N,67,OR,6.68
FILL
FILL,53,65,3,,3,3,1
FILL,53,56,1,1104
FILL,55,58,1,1106
FILL,1104,1106
FILL,56,59,1,1107
FILL,58,61,1,1109
FILL,1107,1109
FILL,59,62,1,1110
FILL,61,64,1,1112
FILL,1110,1112
FILL,62,65,1,1113
FILL,64,67,1,1115
FILL,1113,1115
```

```
/COM **** SINGLE ROW SHELL ****
N,100,IR,7.18                    ! Inside
N,140,IR,71.68
N,180,IR,136.68
N,101,OR,7.18                    ! Outside
N,141,OR,71.68
N,181,OR,136.68
FILL,100,140,20,,2,2,1,2.0
FILL,140,180,19,,2,2,1,.5
FILL,100,102,2,1116,2
FILL,102,104,2,1120,2
FILL,104,106,2,1124,2
FILL,106,108,2,1128,2
FILL,108,110,2,1132,2
FILL,110,112,2,1136,2
FILL,112,114,2,1140,2
FILL,114,116,2,1144,2
NGEN,2,1,1116,1146,2,0.50

/COM **** DOUBLE ROW SHELL ****
N,190,IR,137.18                  ! Transition to Double Row
N,192,OR,137.18
FILL

/COM **** BASE OF CASK THROAT--ELEVATION: 138 INCHES ****
N,217,IR,142.68                    ! Transition to Double Row
N,219,OR,142.68
FILL
FILL,190,217,8,,3,3,1           ! Vertical Fill

/COM **** BOTTOM OF COLLAR TRANSITION ****
N,235,IR,146.06                    ! Start of Transition to Large O.D &
N,237,OR,146.06                    ! Assumed Location of Shield Plug Taper
FILL
N,238,IR,146.68
N,240,OR,146.68
FILL                            ! Horizontal Fill
FILL,217,235,5,,3,3,1           ! Vertical Fill

/COM **** TOP OF COLLAR TRANSITION ****
N,241,IR,147.31                 ! End of Transition to Large O.D &
N,243,OR,147.31                 ! Assumed Location of Shield Plug Taper
FILL                            ! Horizontal Fill
NGEN,2,3,241,243,1,,0.75

/COM **** COLLAR SEALING SURFACE ****
N,247,IR,149.63                 ! Inside Radius of Sealing Surface
N,249,IR2,149.63                ! Outside Radius at Sealing Surface
FILL                            ! Horizontal Fill

/COM **** THICK WALL AT COLLAR TRANSITION ****
NGEN,2,10,240,249,3             ! Nodes 250-259 Coincident w/240-249 (by 3)
N,255,OR2,147.31                ! Outside Surface
N,261,OR2,149.63                ! Outside Surface
N,258,OR2,148.06
N,980,IR,149.38
```

```
N,981,11.755,149.38
N,982,IR2,149.38
N,983,12.317,149.38
N,984,OR2,149.38
N,990,OR2,146.68
FILL,240,990,1,251
NGEN,2,5,980,984,1,,-0.66
FILL,246,258,1,257
FILL,253,255,1,,1,3,3
FILL,237,990,1,991

/COM **** COLLAR AT BOTTOM EDGE OF PLUG (.155" above Sealing Surface) ****
NGEN,2,3,259,,,,0.175          ! Nodes 262

/COM **** COLLAR AT TOP EDGE OF PLUG (1.44" above bottom Edge) ****
NGEN,2,9,262,,,,1.655          ! Nodes 271
FILL,262,271,2
NGEN,3,1,259,271,1,(OR2-IR2)/2

/COM **** COLLAR AT BASE OF THREADS ****
N,274,IR4,151.58
N,1000,IR2,151.58

/COM **** TOP TO COLLAR (WELD CLOSURE) ****
N,277,IR4,152.26
N,280,IR4,152.95
N,283,IR4,153.63
N,286,IR4,154.32
N,289,IR4,154.725
N,290,12.47,154.725
N,291,OR2,154.725
N,292,IR3,155.30
N,295,IR3,155.875
N,300,IR3,154.725
NGEN,2,1,274,289,3,0.27
NGEN,2,1,275,290,3,0.211
NGEN,3,1,292,295,1,(OR2-IR3)/2

/COM ************* LOCKING & LIFTING RING GEOMETRY *************
RING1=7.8775               ! Inner Radius
RING2=9.375          ! Inside Lip
RING3=9.625          ! Inside Lip, Bottom of Transition
RING4=10.19          ! Outside Lip
RING5=12.065         ! Outside Radius No Threads
RING6=12.174         ! Outside Radius
LOCAL,15,0,,151.58                ! Local System z=0 at Base of Lifting Ring

/COM **** TOP EDGE ****
N,401,RING1,6.50
CSYS,0
N,404,RING2,158.08
FILL,401,404,,,1
N,405,9.53,158.08
N,900,9.75,158.08
N,901,9.97,158.08
N,406,RING4,158.08
```

```
/COM **** LIFTING SURFACE ****
CSYS,15
N,421,RING1,5.50
N,424,RING2,5.50
FILL,421,424
N,425,9.53,5.50
N,904,9.75,5.50
N,905,9.97,5.50
N,426,RING4,5.50
FILL,401,421,1,,10,6,1
FILL,900,904,1,902
FILL,901,905,1,903
N,431,RING1,6.50-1.56
N,434,RING2,6.50-1.56
FILL

/COM **** BOLTING SURFACE ****
N,441,RING1,4.37
N,444,RING3,4.37
FILL
NGEN,2,10,441,444,,,-0.38
NGEN,2,10,451,454,,,-0.64
NGEN,2,10,461,464,,,-0.61
NGEN,2,10,471,474,,,-0.69
NGEN,2,10,481,484,,,-0.68
NGEN,2,10,491,494,,,-0.69
NGEN,2,10,501,504,,,-0.68
N,445,10.875-0.75,4.37          ! Inside Edge of Bolt Hole
N,447,10.875+0.75,4.37          ! Outside Edge of Bolt Hole
FILL
N,910,10.875-0.75,4.37     ! Double Nodes @ Bolt for Gap elements
N,911,10.875+0.75,4.37
N,912,10.875-0.75,3.99
N,913,10.875+0.75,3.99
N,455,10.875-0.75,3.99
N,457,10.875+0.75,3.99
FILL,455,457
N,914,10.875-0.75,3.35
N,915,10.875+0.75,3.35
N,465,10.875-0.75,3.35
N,467,10.875+0.75,3.35
FILL,465,467
N,916,10.875-0.75,2.74
N,917,10.875+0.75,2.74
N,475,10.875-0.75,2.74
N,477,10.875+0.75,2.74
FILL,475,477
N,918,10.875-0.75,2.05
N,919,10.875+0.75,2.05
N,485,10.875-0.75,2.05
N,487,10.875+0.75,2.05
FILL,485,487
N,920,10.875-0.75,1.37
N,921,10.875+0.75,1.37
```

```
N,495,10.875-0.75,1.37
N,497,10.875+0.75,1.37
FILL,495,497
N,922,10.875-0.75,0.68
N,923,10.875+0.75,0.68
N,505,10.875-0.75,0.68
N,507,10.875+0.75,0.68
FILL,505,507
N,924,10.875-0.75,0.00
N,925,10.875+0.75,0.00
N,515,10.875-0.75,0.00
N,517,10.875+0.75,0.00
FILL,515,517
N,525,10.125,-0.119               ! Bottom of Bolt Extension
N,527,11.625,-0.119
FILL,525,527

/COM ****CHAMFER  AND THREADS****
N,448,RING5-.22,4.37                   ! O.D of Ring at Chamfer
N,458,RING5,3.99
N,469,RING5,3.35
N,468,RING6,3.35           ! Top of Threads
N,479,RING6,3.145
N,478,RING6,2.74
N,488,RING6,2.05
N,498,RING6,1.37
N,508,RING6,0.68
N,518,RING6,0.00           ! Bottom of Threads


/COM ************* SHIELD PLUG *************
PLUGR1=11.975
PLUGR2=11.45
PLUGR3=11.25
PLUGR4=7.8775
LOCAL,20,0,,158.21          ! Local System z=0 at Top Left of Shield Plug

/COM **** NODES AT PLUG AXIS (r=0) ****
N,601
N,602,0,-1
N,603,0,-1.994
N,606,0,-4.994
FILL,603,606,2,604,1
N,607,0,-6.75
N,610,0,-8.405
FILL,607,610,2,608,1
N,611,0,-9.374
N,613,0,-10.5
FILL,611,613

/COM **** NODAL GENERATION ****
NGEN,2,20,601,613,1,0.8825
NGEN,2,20,621,633,1,0.8825                   ! Id Large Opening
NGEN,2,20,642,653,1,0.6875
NGEN,2,20,662,673,1,0.6875                  ! Id Medium Opening
NGEN,2,20,683,693,1,0.4235                  ! Id Small Opening
```

```
NGEN,2,10,706,713,1,0.9515                ! Center of Opening

N,730,5.4665,-1.994                       ! Od Small Opening
N,736,5.4665,-4.994
FILL,730,736,5,731,1
N,737,5.4665,-6.75
N,740,5.4665,-8.405
FILL,737,740,2,738,1
N,741,5.4665,-9.374
N,743,5.4665,-10.5
FILL,741,743
N,748,5.89,-1.0
NGEN,2,20,730,743,1,0.4235
FILL,748,750
N,766,7.265,0
NGEN,2,20,748,763,1,1.375
FILL,766,768
N,786,7.571,0.00
N,787,7.571,-0.50
N,788,7.571,-1
N,789,7.571,-1.55
N,790,7.571,-2.10
N,791,7.571,-2.60
N,792,7.571,-3.10
N,793,7.571,-3.60
N,794,7.571,-4.10
N,795,7.571,-4.90
N,796,7.571,-5.55
N,797,7.571,-6.75

N,806,PLUGR4,0.00
N,550,PLUGR4,-0.13
N,807,PLUGR4,-0.63
N,808,PLUGR4,-1.13
N,809,PLUGR4,-1.69
N,810,PLUGR4,-2.26
N,811,PLUGR4,-2.64
N,812,PLUGR4,-3.28
N,813,PLUGR4,-3.89
N,814,PLUGR4,-4.58
N,815,PLUGR4,-5.26
N,816,PLUGR4,-5.95
N,817,PLUGR4,-6.75

/COM **** UNDER LOCKING RING ****
N,824,8.5017,-6.75
N,827,8.5017,-8.405
FILL
N,828,8.5017,-9.374
N,830,8.5017,-10.5
FILL
NGEN,2,20,778,783,1,0.306
NGEN,2,20,798,803,1,0.3065
NGEN,3,7,824,830,1,0.5616
NGEN,2,7,838,844,1,0.5001
NGEN,2,7,845,851,1,0.750          ! Under Bolt
```

```
N,859,11.625,-6.75
N,860,11.625,-7.302
N,861,11.625,-7.854
N,862,PLUGR2,-8.405
N,1100,PLUGR2,-8.83
N,863,PLUGR2,-9.374
N,865,PLUGR3,-10.5
FILL,863,865
N,866,PLUGR1-0.27,-6.75     ! Seal Tab
N,869,PLUGR1-0.27,-8.405
FILL,866,869,2,867,1
N,870,PLUGR1-0.27,-8.56
NGEN,2,5,866,870,1,0.27

/COM **** FILTER GUARD PLATE ****
LOCAL,40,0,,147.71          ! Local System z=0 at Bottom Left of Shield Plug
PLATE1=0.273
PLATE2=0.6575
PLATE3=1.357
PLATE4=10.25
PLATE5=11.25

N,1200,PLATE4,-0.85
N,1202,PLATE5,-0.85
FILL
NGEN,5,3,1200,1202,,,-0.85
NGEN,2,3,1212,1214,,,-0.25
N,1221,PLATE4,-5.75
N,1222,10.75,-5.75
N,1223,10.915,-5.75
FILL,1215,1221,1,1218
FILL,1223,1217,1,1220
FILL,1216,1222,1,1219
N,1237,6.4375,-4.25
FILL,1212,1237,3,1225,4
N,1249,3.578,-4.25
FILL,1237,1249,2,1241,4
NGEN,2,1,1225,1249,4,,-0.25
NGEN,2,2,1226,1250,4,,-1.25
FILL,1226,1228,1,1227,,7,4
N,1253,2.625,-2.375
N,1254,2.625,-2.575
N,1256,2.625,-4.25
FILL,1254,1256
N,1257,2.625,-4.5
N,1259,2.625,-5.75
FILL,1257,1259
NGEN,2,10,1253,1259,1,-0.5
NGEN,2,10,1263,1269,1,-0.768
N,1283,0.6575,-2.375
N,1284,0.6575,-2.575
N,1260,2.125
N,1270,1.357
N,1280,0.6575
N,1290,0.273
NGEN,3,1,1260,1290,10,,-0.5625
```

```
/COM **** NODES BELOW THE BOTTOM PLATE FOR GAPS ****
NGEN,2,2000,1,10,1,,-1.00

/COM **** COUPLING NODES ****
/COM **** BETWEEN LIFTING/LOCKING RING & SHELL ****
/COM **** BETWEEN BOLT & LOCKING RING ****

CP,54,UY,445,910     ! Inner Nodes
CP,55,UX,445,910
CP,56,UY,447,911     ! Outer Nodes
CP,57,UX,447,911
!
*DO,I,1,7            ! Going Down The Bolt
CP,57+I,UY,445+10*I,910+2*I
*ENDDO
!
*DO,I,1,7
CP,64+I,UY,447+10*I,911+2*I
*ENDDO
!
*DO,I,1,7
CP,71+I,UX,445+10*I,910+2*I
*ENDDO
!
*DO,I,1,7
CP,78+I,UX,447+10*I,911+2*I
*ENDDO
:
CP,100,UY,479,289          ! Threads
CP,101,UY,478,286
CP,102,UY,488,283
CP,103,UY,498,280
CP,104,UY,508,277


/COM ************* ELEMENT GENERATION *************
/COM ************* SHELL *************

TYPE,1        ! Plane42 -
MAT,1                ! Type 304L/304 Properties  Stainless Steel

E,1,2,22,21          ! Bottom Plate
EGEN,10,1,-1
E,11,32,31
E,21,22,42,41
EGEN,11,1,-1

E,50,51,1102,1101             ! Bottom Shell
EGEN,5,3,-1
E,1101,1102,54,53
EGEN,5,3,-1
E,51,52,1103,1102
EGEN,5,3,-1
E,1102,1103,55,54
```

```
EGEN,5,3,-1
E,65,66,100,
E,66,101,100
E,66,67,101
E,100,101,1117,1116
E,1116,1117,1119,1118
EGEN,8,4,-1
E,1118,1119,103,102
E,102,103,1121,1120
E,1122,1123,105,104
E,104,105,1125,1124
E,1126,1127,107,106
E,106,107,1129,1128
E,1130,1131,109,108
E,108,109,1133,1132
E,1134,1135,111,110
E,110,111,1137,1136
E,1138,1139,113,112
E,112,113,1141,1140
E,1142,1143,115,114
E,114,115,1145,1144
E,1146,1147,117,116
E,116,117,119,118
EGEN,32,2,-1
E,180,181,191
E,190,180,191
E,181,192,191
E,190,191,194,193
EGEN,9,3,-1
E,191,192,195,194
EGEN,9,3,-1

TYPE,1                  ! Collar
MAT,1                          ! FXM-19

E,217,218,221,220
EGEN,9,3,-1
E,218,219,222,221
EGEN,9,3,-1
E,244,245,986,985
E,985,986,981,980
E,980,981,248,247
EGEN,2,1,-3
E,237,991,251,250
E,991,990,251
E,250,251,254,253
E,251,990,255,254
E,253,254,257,246
E,254,255,258,257
E,246,257,988,987
E,257,258,989,988
E,987,988,983,982
E,988,989,984,983
E,982,983,260,259
E,983,984,261,260
E,259,260,263,262
```

```
EGEN,9,3,-1
E,271,274,1000
E,260,261,264,263
EGEN,12,3,-1
E,286,300,289
E,286,287,290,300
E,300,290,293,292
E,292,293,296,295


/COM ************* LOCKING RING *************

TYPE,3
MAT,1                                         ! F304N

E,411,412,402,401                             ! Top Going Down and
EGEN,11,10,-1                                 ! Left to Right
EGEN,3,1,-11
E,414,415,405,404
EGEN,2,1,-1
EGEN,2,10,-2
E,902,903,901,900
EGEN,2,2,-1
E,903,416,406,901
E,905,426,416,903
E,454,912,910,444
E,464,914,912,454
E,474,916,914,464
E,484,918,916,474
E,494,920,918,484
E,504,922,920,494
E,514,924,922,504
E,913,458,448,911
E,915,468,458,913
E,917,478,468,915
E,919,488,478,917
E,921,498,488,919
E,923,508,498,921
E,925,518,508,923


/COM ************* NITRONIC 60 BOLTS (MODELED AS RING) *************

TYPE,2
MAT,2                                         ! SA-193

E,455,456,446,445
EGEN,8,10,-1
E,456,457,447,446
EGEN,8,10,-1


/COM ************* SHIELD PLUG *************

TYPE,4
MAT,1                                         ! 304L
```

```
E,602,622,621,601
EGEN,11,1,-1
EGEN,2,20,-11
E,613,1290,612
E,1290,1280,632,612
E,1280,633,632
E,633,1270,632
E,632,1270,652
E,1270,653,652

E,643,663,662,642
EGEN,10,1,-1
EGEN,2,20,-10
E,653,1260,652
E,1260,673,672,652
E,673,693,692,672
E,684,704,703,683
EGEN,10,1,-1
E,707,717,716,706
EGEN,7,1,-1
E,717,737,736,716
EGEN,7,1,-1
E,731,751,750,730
EGEN,13,1,-1
EGEN,4,20,-13
E,749,769,768,748
EGEN,2,1,-1
EGEN,3,20,-2
E,767,787,786,766
EGEN,2,1,-1
EGEN,2,20,-1
E,787,807,550,786
E,550,806,786
E,818,825,824,817
EGEN,6,1,-1
EGEN,5,7,-6
E,853,860,859,852
EGEN,3,1,-1
EGEN,2,7,-3
E,867,872,871,866
EGEN,4,1,-1
E,1100,862,855
E,856,1100,855
E,856,863,1100
E,857,864,863,856
EGEN,2,1,-1


/COM ************* FILTER GUARD PLATE *************
TYPE,4
MAT,1

E,1200,1201,858,851
E,1201,1202,865,858
E,1203,1204,1201,1200
```

```
EGEN,2,1,-1
EGEN,6,3,-2
E,1221,1222,1219,1218
E,1222,1223,1220,1219
E,1226,1215,1212,1225
E,1227,1218,1215,1226
E,1228,1221,1218,1227
E,1230,1226,1225,1229
EGEN,3,1,-1
EGEN,6,4,-3
E,1257,1250,1249,1256
EGEN,3,1,-1
E,1264,1254,1253,1263
EGEN,6,1,-1
E,1271,1261,1260,1270
EGEN,9,1,-1
E,1281,1271,1270,1280
EGEN,4,1,-1
E,1291,1281,1280,1290
EGEN,2,1,-1


/COM ************* CONTACT ELEMENTS *************

/COM **** BETWEEN SHIELD PLUG & SHELL ****
TYPE,5
REAL,4
E,871,271
E,872,268
E,873,265
E,874,262
E,1100,980


/COM **** BETWEEN SHIELD PLUG & SEAL LIP ****
TYPE,5
REAL,6
E,248,870
E,249,875


TYPE,5
REAL,8
E,247,862
E,248,869


/COM **** UNDER THE BOLT ****
TYPE,5
REAL,5
E,845,525
E,852,526
E,859,527

/COM **** BETWEEN LOCKING RING & PLUG ****
TYPE,5
```

```
REAL,4
E,550,401
E,807,411
E,808,421
E,809,431
E,810,441
E,811,451
E,812,461
E,813,471
E,814,481
E,815,491
E,816,501


/COM **** BELOW BOTTOM PLATE ****
TYPE,5
REAL,7
E,2001,1
EGEN,10,1,-1
NALL
EALL



/COM ************* MERGING COINCIDENT NODES *************
ESEL,S,TYPE,,1
NSLE
NUMMRG,NODE
EALL
NALL


/COM ************* BOUNDARY CONDITIONS *************
CSYS,0
NSEL,S,LOC,X,0
NSEL,R,LOC,Y,-1.5,165
D,ALL,UX,0
NALL
EALL
NSEL,S,NODE,,2001,2010
D,ALL,ALL,0
NALL
EALL



/COM **** LOAD 1: 150 PSI INTERNAL PRESSURE ****
NSEL,S,NODE,,41      ! Bottom Plate
NSEL,A,NODE,,42
NSEL,A,NODE,,43
NSEL,A,NODE,,44
NSEL,A,NODE,,45
NSEL,A,NODE,,46
NSEL,A,NODE,,47
NSEL,A,NODE,,48
NSEL,A,NODE,,49
```

```
NSEL,A,NODE,,50              ! Junction at Shell
NSEL,A,NODE,,1101            ! Bottom Shell
NSEL,A,NODE,,53
NSEL,A,NODE,,1104
NSEL,A,NODE,,56
NSEL,A,NODE,,1107
NSEL,A,NODE,,59
NSEL,A,NODE,,1110
NSEL,A,NODE,,62
NSEL,A,NODE,,1113
NSEL,A,NODE,,65
NSEL,A,NODE,,100
NSEL,A,NODE,,1116
NSEL,A,NODE,,1118
NSEL,A,NODE,,102
NSEL,A,NODE,,1120
NSEL,A,NODE,,1122
NSEL,A,NODE,,104
NSEL,A,NODE,,1124
NSEL,A,NODE,,1126
NSEL,A,NODE,,106
NSEL,A,NODE,,1128
NSEL,A,NODE,,1130
NSEL,A,NODE,,108
NSEL,A,NODE,,1132
NSEL,A,NODE,,1134
NSEL,A,NODE,,110
NSEL,A,NODE,,1136
NSEL,A,NODE,,1138
NSEL,A,NODE,,112
NSEL,A,NODE,,1140
NSEL,A,NODE,,1142
NSEL,A,NODE,,114
NSEL,A,NODE,,116
NSEL,A,NODE,,1144
NSEL,A,NODE,,1146
NSEL,A,NODE,,118
NSEL,A,NODE,,120
NSEL,A,NODE,,122
NSEL,A,NODE,,124
NSEL,A,NODE,,126
NSEL,A,NODE,,128
NSEL,A,NODE,,130
NSEL,A,NODE,,132
NSEL,A,NODE,,134
NSEL,A,NODE,,136
NSEL,A,NODE,,138
NSEL,A,NODE,,140
NSEL,A,NODE,,142
NSEL,A,NODE,,144
NSEL,A,NODE,,146
NSEL,A,NODE,,148
NSEL,A,NODE,,150
NSEL,A,NODE,,152
NSEL,A,NODE,,154
NSEL,A,NODE,,156
```

```
NSEL,A,NODE,,158
NSEL,A,NODE,,160
NSEL,A,NODE,,162
NSEL,A,NODE,,164
NSEL,A,NODE,,166
NSEL,A,NODE,,168
NSEL,A,NODE,,170
NSEL,A,NODE,,172
NSEL,A,NODE,,174
NSEL,A,NODE,,176
NSEL,A,NODE,,178
NSEL,A,NODE,,180
NSEL,A,NODE,,182
NSEL,A,NODE,,184
NSEL,A,NODE,,186
NSEL,A,NODE,,188
NSEL,A,NODE,,190
NSEL,A,NODE,,193
NSEL,A,NODE,,196
NSEL,A,NODE,,199
NSEL,A,NODE,,202
NSEL,A,NODE,,205
NSEL,A,NODE,,208
NSEL,A,NODE,,211
NSEL,A,NODE,,214
NSEL,A,NODE,,217
NSEL,A,NODE,,220
NSEL,A,NODE,,223
NSEL,A,NODE,,226
NSEL,A,NODE,,229
NSEL,A,NODE,,232
NSEL,A,NODE,,235
NSEL,A,NODE,,238
NSEL,A,NODE,,241
NSEL,A,NODE,,244
NSEL,A,NODE,,985
NSEL,A,NODE,,980
NSEL,A,NODE,,247                ! Shell at Sealing Surface
NSEL,A,NODE,,248
NSEL,A,NODE,,870                ! Seal Stop (Plug)
NSEL,A,NODE,,869
NSEL,A,NODE,,862
NSEL,A,NODE,,1100
NSEL,A,NODE,,863                ! Plug Taper
NSEL,A,NODE,,864
NSEL,A,NODE,,865                ! Start Plug Bottom
NSEL,A,NODE,,1202               ! Side of Guard Plate Ring
NSEL,A,NODE,,1205
NSEL,A,NODE,,1208
NSEL,A,NODE,,1211
NSEL,A,NODE,,1214
NSEL,A,NODE,,1217
NSEL,A,NODE,,1220
NSEL,A,NODE,,1223               ! Bottom of Guard Plate
NSEL,A,NODE,,1222
NSEL,A,NODE,,1221
```

```
NSEL,A,NODE,,1228
NSEL,A,NODE,,1232
NSEL,A,NODE,,1236
NSEL,A,NODE,,1240
NSEL,A,NODE,,1244
NSEL,A,NODE,,1248
NSEL,A,NODE,,1252
NSEL,A,NODE,,1259
NSEL,A,NODE,,1269
NSEL,A,NODE,,1279
SF,ALL,PRES,150
NALL
EALL



/COM **** LOAD 2: APPLYING EQUIVALENT 28g CSB DROP ****
NSEL,S,NODE,,601,641,20
NSEL,A,NODE,,766,806,20
SF,ALL,PRES,14162                       ! 28g x 20000 lb = 560,000 lb
NALL                                    ! Shield Plug Area = 39.54 in^2
EALL                                    ! P/A = 14162 psi

save
/COM **** SOLUTION PHASE ****
/SOLUTION
SOLVE
SAVE
FINI

/COM **** POSTPROCESSING ****
/POST1
SET,LAST
/TYPE,ALL,HIDC
/GLINE,ALL,0
RSYS,0
PLNSOL,S,INT
/DSCALE,,20
/REPLOT
NSEL,S,LOC,X,11.49,11.51
NSEL,R,LOC,Y,-0.33,149.63
PRNS,U,X
NALL
EALL
NSEL,S,LOC,X,1.356,11.26
NSEL,R,LOC,Y,141.87,143.39
PRNS,U,Y
NALL
EALL
LPATH,1,41
PRSECT
LPATH,9,49
PRSECT
LPATH,10,50
PRSECT
LPATH,50,52
```

```
PRSECT
LPATH,1101,1103
PRSECT
LPATH,62,64
PRSECT
LPATH,134,135
PRSECT
LPATH,180,181
PRSECT
LPATH,202,204
PRSECT
LPATH,232,234
PRSECT
LPATH,249,261
PRSECT
LPATH,262,264
PRSECT
LPATH,274,276
PRSECT
LPATH,277,279
PRSECT
LPATH,292,294
PRSECT
LPATH,601,641
PRSECT
LPATH,601,613
PRSECT
LPATH,603,683
PRSECT
LPATH,606,706
PRSECT
LPATH,766,806
PRSECT
LPATH,768,808
PRSECT
LPATH,750,810
PRSECT
LPATH,736,815
PRSECT
LPATH,869,874
PRSECT
LPATH,870,875
PRSECT
LPATH,851,865
PRSECT
LPATH,1290,1260
PRSECT
LPATH,1282,1262
PRSECT
LPATH,1283,1263
PRSECT
LPATH,1274,1254
PRSECT
LPATH,1276,1256
PRSECT
LPATH,431,434
```

```
PRSECT
LPATH,406,426
PRSECT
LPATH,921,498
PRSECT
LPATH,404,424
PRSECT
SAVE
FINI
```

COMPUTER RUN COVER SHEET

Project Number:	KH-8009-8
Computer Code:	ANSYS®-PC
Software Version:	5.4
Computer System:	Windows NT 4.0, Pentium® II Processor
Computer Run File Number:	KH-8009-8-03
Unique Computer Run Filename:	CSB.out
Run Description:	MCO CSB Tube Drop without Lifting Cap
Run Date / Time:	17 December 1998 13:27:48

FOR JOE NICHOLS 2/9/99

Prepared By: Joseph C. Nichols Date

FOR MIKE COHEN 2/9/99

Checked By: Mike Cohen Date

COMPUTER RUN COVER SHEET

Project Number:	KH-8009-8
Computer Code:	ANSYS®-PC
Software Version:	5.4
Computer System:	Window NT 4.0, Pentium® II Processor
Computer Run File Number:	KH-8009-8-03
Unique Computer Run Filename:	BBED.inp
Run Description:	MCO Bare Bottom End Drop
Creation Date / Time:	17 December 1998 13:17:45 AM

FOR JOE NICHOLS 2/9/99

Prepared By: Joseph C. Nichols Date

D Barlow FOR MIKE COHEN 2/9/99

Checked By: Mike Cohen Date

LISTING OF BBED.INP FILE

```
fini
/cle
/FILENAM,bbed
/PREP7
/TITLE,28g CSB DROP - 132 DEGREES C, 150 psi PRESSURE, NO CAP
TREF,70
TUNIF,270

ETAN=0.006                        ! Tangent modulus

/COM ************* ELEMENT TYPES *************
ET,1,42,,,1                                ! Shell & Collar
ET,2,42,,,1                                      ! Bolts
ET,3,42,,,1                       ! Locking Ring
ET,4,42,,,1                       ! Shield Plug & Guard Plate
ET,5,12                           ! Gap Elements
KEYOPT,5,7,1

/COM ************* REAL CONSTANTS FOR GAP ELEMENTS *************
R,4,-90,1.0e8,-0.045,3.0            ! Shell/Shield Plug, Initially Open 0.045"
R,5,0,1.0e8,2.75e-03              ! L. Ring/Shield Plug, Under Bolt, Preloaded
R,6,0,1.0e8,0,2.0                  ! Sealing Surface, closed
R,7,0,1.0e8,0,1.0           !Bottom MCO Plate, Closed
R,8,0,2.42e7,0,2.0                  ! Seal Spring, Max. Stiffness


/COM ************* MATERIAL PROPERTIES *************

/COM **** MATERIAL 1,  304L STAINLESS STEEL ****
MP,DENS,1,493/1728                 ! 304L SS
MP,NUXY,1,0.3

/COM ** DEFINING TEMPERATURES (MPDATA) FOR 304L/304 **
MPTEMP,1, 70,100,200,300

/COM ** DEFINING ELASTIC MODULI FOR 304L/304 **
MPDATA,EX,1,1,28.3e+06,28.1e+06,27.6e+06,27.0e+06

/COM ** MEAN COEFFICIENTS OF THERMAL EXPANSION (in./in./(F) 304L/304 **
MPDATA,ALPX,1,1,8.46e-06,8.55e-06,8.79e-06,9.00e-06



/COM **** MATERIAL 2, SA-193 GRADE B8S ****
MP,DENS,2,473/1728
MP,NUXY,2,0.3

/COM ** DEFINING TEMPERATURES (MPDATA) FOR SA-193 **
MPTEMP,1,70,100,200,300

/COM ** DEFINING ELASTIC MODULI FOR SA-193 **
MPDATA,EX,2,1,28.3e+06,28.1e+06,27.6e+06,27.0e+06

/COM ** MEAN COEFFICIENTS OF THERMAL EXPANSION (in./in./(F) SA-193 **
```

```
MPDATA,ALPX,2,1,8.55e-06,8.79e-06,9.00e-06,9.19e-06



/COM ************* SHELL GEOMETRY ****************
IR=11.49                      ! Internal Shell Radius @ Bottom
OR=12.000                      ! Shell Outside Radius @ Bottom
IR2 = 12.02                    ! Inside Radius at Collar Sealing Surface
OR2 = 12.655                   ! Outside Radius at Collar Sealing Surface
IR3 = 12.284                    ! Inside Radius at Collar-Lifting Ring Weld
IR4=12.174           ! Inside Radius

/COM **** BOTTOM  PLATE   [DWG SK-2-300378] ****
N,1,,-1.32                                ! Row 1
N,2,1.25,-1.32
N,3,2.13,-1.32
N,10,11.423,-1.32
FILL

N,41,0.00,-0.19            ! Row 3
N,42,1.25,-0.19
N,43,2.13,0.69
N,50,IR,0.69
FILL,43,50
N,52,OR,0.69
FILL,50,52

FILL,1,41,1,21,1,10            ! Middle Row
FILL,10,50,1,30
N,32,12,-0.32
FILL,30,32
FILL,10,32,1,11
N,53,IR,1.17
N,55,OR,1.17                   ! Shell Stub/Weld
FILL,53,55
FILL,50,53,1,1101
FILL,51,54,1,1102
FILL,52,55,1,1103

/COM **** SHELL [DWGS SK-2-300379 & SK-2-300461] ****
N,65,IR,6.68
N,67,OR,6.68
FILL
FILL,53,65,3,,3,3,1
FILL,53,56,1,1104
FILL,55,58,1,1106
FILL,1104,1106
FILL,56,59,1,1107
FILL,58,61,1,1109
FILL,1107,1109
FILL,59,62,1,1110
FILL,61,64,1,1112
FILL,1110,1112
FILL,62,65,1,1113
FILL,64,67,1,1115
FILL,1113,1115
```

```
/COM **** SINGLE ROW SHELL ****
N,100,IR,7.18                     ! Inside
N,140,IR,71.68
N,180,IR,136.68
N,101,OR,7.18                     ! Outside
N,141,OR,71.68
N,181,OR,136.68
FILL,100,140,20,,2,2,1,2.0
FILL,140,180,19,,2,2,1,.5
FILL,100,102,2,1116,2
FILL,102,104,2,1120,2
FILL,104,106,2,1124,2
FILL,106,108,2,1128,2
FILL,108,110,2,1132,2
FILL,110,112,2,1136,2
FILL,112,114,2,1140,2
FILL,114,116,2,1144,2
NGEN,2,1,1116,1146,2,0.50

/COM **** DOUBLE ROW SHELL ****
N,190,IR,137.18                   ! Transition to Double Row
N,192,OR,137.18
FILL

/COM **** BASE OF CASK THROAT--ELEVATION: 138 INCHES ****
N,217,IR,142.68                     ! Transition to Double Row
N,219,OR,142.68
FILL
FILL,190,217,8,,3,3,1            ! Vertical Fill

/COM **** BOTTOM OF COLLAR TRANSITION ****
N,235,IR,146.06                     ! Start of Transition to Large O.D &
N,237,OR,146.06                     ! Assumed Location of Shield Plug Taper
FILL
N,238,IR,146.68
N,240,OR,146.68
FILL                             ! Horizontal Fill
FILL,217,235,5,,3,3,1            ! Vertical Fill

/COM **** TOP OF COLLAR TRANSITION ****
N,241,IR,147.31                  ! End of Transition to Large O.D &
N,243,OR,147.31                  ! Assumed Location of Shield Plug Taper
FILL                             ! Horizontal Fill
NGEN,2,3,241,243,1,,0.75

/COM **** COLLAR SEALING SURFACE ****
N,247,IR,149.63                  ! Inside Radius of Sealing Surface
N,249,IR2,149.63                 ! Outside Radius at Sealing Surface
FILL                             ! Horizontal Fill

/COM **** THICK WALL AT COLLAR TRANSITION ****
NGEN,2,10,240,249,3              ! Nodes 250-259 Coincident w/240-249 (by 3)
N,255,OR2,147.31                 ! Outside Surface
N,261,OR2,149.63                 ! Outside Surface
N,258,OR2,148.06
```

```
N,980,IR,149.38
N,981,11.755,149.38
N,982,IR2,149.38
N,983,12.317,149.38
N,984,OR2,149.38
N,990,OR2,146.68
FILL,240,990,1,251
NGEN,2,5,980,984,1,,-0.66
FILL,246,258,1,257
FILL,253,255,1,,1,3,3
FILL,237,990,1,991

/COM **** COLLAR AT BOTTOM EDGE OF PLUG (.155" above Sealing Surface) ****
NGEN,2,3,259,,,,0.175            ! Nodes 262

/COM **** COLLAR AT TOP EDGE OF PLUG (1.44" above bottom Edge) ****
NGEN,2,9,262,,,,1.655           ! Nodes 271
FILL,262,271,2
NGEN,3,1,259,271,1,(OR2-IR2)/2

/COM **** COLLAR AT BASE OF THREADS ****
N,274,IR4,151.58
N,1000,IR2,151.58

/COM **** TOP TO COLLAR (WELD CLOSURE) ****
N,277,IR4,152.26
N,280,IR4,152.95
N,283,IR4,153.63
N,286,IR4,154.32
N,289,IR4,154.725
N,290,12.47,154.725
N,291,OR2,154.725
N,292,IR3,155.30
N,295,IR3,155.875
N,300,IR3,154.725
NGEN,2,1,274,289,3,0.27
NGEN,2,1,275,290,3,0.211
NGEN,3,1,292,295,1,(OR2-IR3)/2

/COM ************* LOCKING & LIFTING RING GEOMETRY *************
RING1=7.8775                 ! Inner Radius
RING2=9.375          ! Inside Lip
RING3=9.625          ! Inside Lip, Bottom of Transition
RING4=10.19          ! Outside Lip
RING5=12.065         ! Outside Radius No Threads
RING6=12.174         ! Outside Radius
LOCAL,15,0,,151.58                 ! Local System z=0 at Base of Lifting Ring

/COM **** TOP EDGE ****
N,401,RING1,6.50
CSYS,0
N,404,RING2,158.08
FILL,401,404,,,1
N,405,9.53,158.08
N,900,9.75,158.08
N,901,9.97,158.08
```

```
N,406,RING4,158.08


/COM **** LIFTING SURFACE ****
CSYS,15
N,421,RING1,5.50
N,424,RING2,5.50
FILL,421,424
N,425,9.53,5.50
N,904,9.75,5.50
N,905,9.97,5.50
N,426,RING4,5.50
FILL,401,421,1,,10,6,1
FILL,900,904,1,902
FILL,901,905,1,903
N,431,RING1,6.50-1.56
N,434,RING2,6.50-1.56
FILL

/COM **** BOLTING SURFACE ****
N,441,RING1,4.37
N,444,RING3,4.37
FILL
NGEN,2,10,441,444,,,-0.38
NGEN,2,10,451,454,,,-0.64
NGEN,2,10,461,464,,,-0.61
NGEN,2,10,471,474,,,-0.69
NGEN,2,10,481,484,,,-0.68
NGEN,2,10,491,494,,,-0.69
NGEN,2,10,501,504,,,-0.68
N,445,10.875-0.75,4.37          ! Inside Edge of Bolt Hole
N,447,10.875+0.75,4.37          ! Outside Edge of Bolt Hole
FILL
N,910,10.875-0.75,4.37      ! Double Nodes @ Bolt for Gap elements
N,911,10.875+0.75,4.37
N,912,10.875-0.75,3.99
N,913,10.875+0.75,3.99
N,455,10.875-0.75,3.99
N,457,10.875+0.75,3.99
FILL,455,457
N,914,10.875-0.75,3.35
N,915,10.875+0.75,3.35
N,465,10.875-0.75,3.35
N,467,10.875+0.75,3.35
FILL,465,467
N,916,10.875-0.75,2.74
N,917,10.875+0.75,2.74
N,475,10.875-0.75,2.74
N,477,10.875+0.75,2.74
FILL,475,477
N,918,10.875-0.75,2.05
N,919,10.875+0.75,2.05
N,485,10.875-0.75,2.05
N,487,10.875+0.75,2.05
FILL,485,487
N,920,10.875-0.75,1.37
```

```
N,921,10.875+0.75,1.37
N,495,10.875-0.75,1.37
N,497,10.875+0.75,1.37
FILL,495,497
N,922,10.875-0.75,0.68
N,923,10.875+0.75,0.68
N,505,10.875-0.75,0.68
N,507,10.875+0.75,0.68
FILL,505,507
N,924,10.875-0.75,0.00
N,925,10.875+0.75,0.00
N,515,10.875-0.75,0.00
N,517,10.875+0.75,0.00
FILL,515,517
N,525,10.125,-0.119               ! Bottom of Bolt Extension
N,527,11.625,-0.119
FILL,525,527

/COM ****CHAMFER  AND THREADS****
N,448,RING5-.22,4.37                   ! O.D of Ring at Chamfer
N,458,RING5,3.99
N,469,RING5,3.35
N,468,RING6,3.35           ! Top of Threads
N,479,RING6,3.145
N,478,RING6,2.74
N,488,RING6,2.05
N,498,RING6,1.37
N,508,RING6,0.68
N,518,RING6,0.00           ! Bottom of Threads


/COM ************* SHIELD PLUG *************
PLUGR1=11.975
PLUGR2=11.45
PLUGR3=11.25
PLUGR4=7.8775
LOCAL,20,0,,158.21          ! Local System z=0 at Top Left of Shield Plug

/COM **** NODES AT PLUG AXIS (r=0) ****
N,601
N,602,0,-1
N,603,0,-1.994
N,606,0,-4.994
FILL,603,606,2,604,1
N,607,0,-6.75
N,610,0,-8.405
FILL,607,610,2,608,1
N,611,0,-9.374
N,613,0,-10.5
FILL,611,613

/COM **** NODAL GENERATION ****
NGEN,2,20,601,613,1,0.8825
NGEN,2,20,621,633,1,0.8825                   ! Id Large Opening
NGEN,2,20,642,653,1,0.6875
NGEN,2,20,662,673,1,0.6875                  ! Id Medium Opening
```

```
NGEN,2,20,683,693,1,0.4235             ! Id Small Opening
NGEN,2,10,706,713,1,0.9515             ! Center of Opening

N,730,5.4665,-1.994                    ! Od Small Opening
N,736,5.4665,-4.994
FILL,730,736,5,731,1
N,737,5.4665,-6.75
N,740,5.4665,-8.405
FILL,737,740,2,738,1
N,741,5.4665,-9.374
N,743,5.4665,-10.5
FILL,741,743
N,748,5.89,-1.0
NGEN,2,20,730,743,1,0.4235
FILL,748,750
N,766,7.265,0
NGEN,2,20,748,763,1,1.375
FILL,766,768
N,786,7.571,0.00
N,787,7.571,-0.50
N,788,7.571,-1
N,789,7.571,-1.55
N,790,7.571,-2.10
N,791,7.571,-2.60
N,792,7.571,-3.10
N,793,7.571,-3.60
N,794,7.571,-4.10
N,795,7.571,-4.90
N,796,7.571,-5.55
N,797,7.571,-6.75

N,806,PLUGR4,0.00
N,550,PLUGR4,-0.13
N,807,PLUGR4,-0.63
N,808,PLUGR4,-1.13
N,809,PLUGR4,-1.69
N,810,PLUGR4,-2.26
N,811,PLUGR4,-2.64
N,812,PLUGR4,-3.28
N,813,PLUGR4,-3.89
N,814,PLUGR4,-4.58
N,815,PLUGR4,-5.26
N,816,PLUGR4,-5.95
N,817,PLUGR4,-6.75

/COM **** UNDER LOCKING RING ****
N,824,8.5017,-6.75
N,827,8.5017,-8.405
FILL
N,828,8.5017,-9.374
N,830,8.5017,-10.5
FILL
NGEN,2,20,778,783,1,0.306
NGEN,2,20,798,803,1,0.3065
NGEN,3,7,824,830,1,0.5616
NGEN,2,7,838,844,1,0.5001
```

```
NGEN,2,7,845,851,1,0.750         ! Under Bolt
N,859,11.625,-6.75
N,860,11.625,-7.302
N,861,11.625,-7.854
N,862,PLUGR2,-8.405
N,1100,PLUGR2,-8.83
N,863,PLUGR2,-9.374
N,865,PLUGR3,-10.5
FILL,863,865
N,866,PLUGR1-0.27,-6.75     ! Seal Tab
N,869,PLUGR1-0.27,-8.405
FILL,866,869,2,867,1
N,870,PLUGR1-0.27,-8.56
NGEN,2,5,866,870,1,0.27

/COM **** FILTER GUARD PLATE ****
LOCAL,40,0,,147.71            ! Local System z=0 at Bottom Left of Shield Plug
PLATE1=0.273
PLATE2=0.6575
PLATE3=1.357
PLATE4=10.25
PLATE5=11.25

N,1200,PLATE4,-0.85
N,1202,PLATE5,-0.85
FILL
NGEN,5,3,1200,1202,,,-0.85
NGEN,2,3,1212,1214,,,-0.25
N,1221,PLATE4,-5.75
N,1222,10.75,-5.75
N,1223,10.915,-5.75
FILL,1215,1221,1,1218
FILL,1223,1217,1,1220
FILL,1216,1222,1,1219
N,1237,6.4375,-4.25
FILL,1212,1237,3,1225,4
N,1249,3.578,-4.25
FILL,1237,1249,2,1241,4
NGEN,2,1,1225,1249,4,,-0.25
NGEN,2,2,1226,1250,4,,-1.25
FILL,1226,1228,1,1227,,7,4
N,1253,2.625,-2.375
N,1254,2.625,-2.575
N,1256,2.625,-4.25
FILL,1254,1256
N,1257,2.625,-4.5
N,1259,2.625,-5.75
FILL,1257,1259
NGEN,2,10,1253,1259,1,-0.5
NGEN,2,10,1263,1269,1,-0.768
N,1283,0.6575,-2.375
N,1284,0.6575,-2.575
N,1260,2.125
N,1270,1.357
N,1280,0.6575
N,1290,0.273
```

```
NGEN,3,1,1260,1290,10,,-0.5625


/COM **** NODES BELOW THE BOTTOM PLATE FOR GAPS ****
NGEN,2,2000,1,10,1,,-1.00

/COM **** COUPLING NODES ****
/COM **** BETWEEN LIFTING/LOCKING RING & SHELL ****
/COM **** BETWEEN BOLT & LOCKING RING ****

CP,54,UY,445,910      ! Inner Nodes
CP,55,UX,445,910
CP,56,UY,447,911      ! Outer Nodes
CP,57,UX,447,911
!
*DO,I,1,7             ! Going Down The Bolt
CP,57+I,UY,445+10*I,910+2*I
*ENDDO
!
*DO,I,1,7
CP,64+I,UY,447+10*I,911+2*I
*ENDDO
!
*DO,I,1,7
CP,71+I,UX,445+10*I,910+2*I
*ENDDO
!
*DO,I,1,7
CP,78+I,UX,447+10*I,911+2*I
*ENDDO
!
CP,100,UY,479,289           ! Threads
CP,101,UY,478,286
CP,102,UY,488,283
CP,103,UY,498,280
CP,104,UY,508,277


/COM ************* ELEMENT GENERATION *************
/COM ************* SHELL *************

TYPE,1          ! Plane42 -
MAT,1                 ! Type 304L/304 Properties  Stainless Steel

E,1,2,22,21           ! Bottom Plate
EGEN,10,1,-1
E,11,32,31
E,21,22,42,41
EGEN,11,1,-1

E,50,51,1102,1101                 ! Bottom Shell
EGEN,5,3,-1
E,1101,1102,54,53
EGEN,5,3,-1
E,51,52,1103,1102
EGEN,5,3,-1
```

```
E,1102,1103,55,54
EGEN,5,3,-1
E,65,66,100,
E,66,101,100
E,66,67,101
E,100,101,1117,1116
E,1116,1117,1119,1118
EGEN,8,4,-1
E,1118,1119,103,102
E,102,103,1121,1120
E,1122,1123,105,104
E,104,105,1125,1124
E,1126,1127,107,106
E,106,107,1129,1128
E,1130,1131,109,108
E,108,109,1133,1132
E,1134,1135,111,110
E,110,111,1137,1136
E,1138,1139,113,112
E,112,113,1141,1140
E,1142,1143,115,114
E,114,115,1145,1144
E,1146,1147,117,116
E,116,117,119,118
EGEN,32,2,-1
E,180,181,191
E,190,180,191
E,181,192,191
E,190,191,194,193
EGEN,9,3,-1
E,191,192,195,194
EGEN,9,3,-1

TYPE,1                  ! Collar
MAT,1                          ! FXM-19

E,217,218,221,220
EGEN,9,3,-1
E,218,219,222,221
EGEN,9,3,-1
E,244,245,986,985
E,985,986,981,980
E,980,981,248,247
EGEN,2,1,-3
E,237,991,251,250
E,991,990,251
E,250,251,254,253
E,251,990,255,254
E,253,254,257,246
E,254,255,258,257
E,246,257,988,987
E,257,258,989,988
E,987,988,983,982
E,988,989,984,983
E,982,983,260,259
E,983,984,261,260
```

```
E,259,260,263,262
EGEN,9,3,-1
E,271,274,1000
E,260,261,264,263
EGEN,12,3,-1
E,286,300,289
E,286,287,290,300
E,300,290,293,292
E,292,293,296,295


/COM ************* LOCKING RING *************

TYPE,3
MAT,1                                        ! F304N

E,411,412,402,401                            ! Top Going Down and
EGEN,11,10,-1                                ! Left to Right
EGEN,3,1,-11
E,414,415,405,404
EGEN,2,1,-1
EGEN,2,10,-2
E,902,903,901,900
EGEN,2,2,-1
E,903,416,406,901
E,905,426,416,903
E,454,912,910,444
E,464,914,912,454
E,474,916,914,464
E,484,918,916,474
E,494,920,918,484
E,504,922,920,494
E,514,924,922,504
E,913,458,448,911
E,915,468,458,913
E,917,478,468,915
E,919,488,478,917
E,921,498,488,919
E,923,508,498,921
E,925,518,508,923


/COM ************* NITRONIC 60 BOLTS (MODELED AS RING) *************

TYPE,2
MAT,2                                        ! SA-193

E,455,456,446,445
EGEN,8,10,-1
E,456,457,447,446
EGEN,8,10,-1


/COM ************* SHIELD PLUG *************

TYPE,4
```

```
MAT,1                                              ! 304L

E,602,622,621,601
EGEN,11,1,-1
EGEN,2,20,-11
E,613,1290,612
E,1290,1280,632,612
E,1280,633,632
E,633,1270,632
E,632,1270,652
E,1270,653,652

E,643,663,662,642
EGEN,10,1,-1
EGEN,2,20,-10
E,653,1260,652
E,1260,673,672,652
E,673,693,692,672
E,684,704,703,683
EGEN,10,1,-1
E,707,717,716,706
EGEN,7,1,-1
E,717,737,736,716
EGEN,7,1,-1
E,731,751,750,730
EGEN,13,1,-1
EGEN,4,20,-13
E,749,769,768,748
EGEN,2,1,-1
EGEN,3,20,-2
E,767,787,786,766
EGEN,2,1,-1
EGEN,2,20,-1
E,787,807,550,786
E,550,806,786
E,818,825,824,817
EGEN,6,1,-1
EGEN,5,7,-6
E,853,860,859,852
EGEN,3,1,-1
EGEN,2,7,-3
E,867,872,871,866
EGEN,4,1,-1
E,1100,862,855
E,856,1100,855
E,856,863,1100
E,857,864,863,856
EGEN,2,1,-1


/COM ************* FILTER GUARD PLATE *************
TYPE,4
MAT,1

E,1200,1201,858,851
E,1201,1202,865,858
```

```
E,1203,1204,1201,1200
EGEN,2,1,-1
EGEN,6,3,-2
E,1221,1222,1219,1218
E,1222,1223,1220,1219
E,1226,1215,1212,1225
E,1227,1218,1215,1226
E,1228,1221,1218,1227
E,1230,1226,1225,1229
EGEN,3,1,-1
EGEN,6,4,-3
E,1257,1250,1249,1256
EGEN,3,1,-1
E,1264,1254,1253,1263
EGEN,6,1,-1
E,1271,1261,1260,1270
EGEN,9,1,-1
E,1281,1271,1270,1280
EGEN,4,1,-1
E,1291,1281,1280,1290
EGEN,2,1,-1


/COM ************* CONTACT ELEMENTS *************

/COM **** BETWEEN SHIELD PLUG & SHELL ****
TYPE,5
REAL,4
E,871,271
E,872,268
E,873,265
E,874,262
E,1100,980


/COM **** BETWEEN SHIELD PLUG & SEAL LIP ****
TYPE,5
REAL,6
E,248,870
E,249,875


TYPE,5
REAL,8
E,247,862
E,248,869


/COM **** UNDER THE BOLT ****
TYPE,5
REAL,5
E,845,525
E,852,526
E,859,527

/COM **** BETWEEN LOCKING RING & PLUG ****
```

```
TYPE,5
REAL,4
E,550,401
E,807,411
E,808,421
E,809,431
E,810,441
E,811,451
E,812,461
E,813,471
E,814,481
E,815,491
E,816,501


/COM **** BELOW BOTTOM PLATE ****
TYPE,5
REAL,7
E,2001,1
EGEN,10,1,-1
NALL
EALL



/COM ************* MERGING COINCIDENT NODES *************
ESEL,S,TYPE,,1
NSLE
NUMMRG,NODE
EALL
NALL


/COM ************* BOUNDARY CONDITIONS *************
CSYS,0
NSEL,S,LOC,X,0
NSEL,R,LOC,Y,-1.5,165
D,ALL,UX,0
NALL
EALL
NSEL,S,NODE,,2001,2010
D,ALL,ALL,0
NALL
EALL
SAVE




/COM **** LOAD 1: 150 PSI INTERNAL PRESSURE ****

NSEL,S,NODE,,41      ! Bottom Plate
NSEL,A,NODE,,42
NSEL,A,NODE,,43
NSEL,A,NODE,,44
NSEL,A,NODE,,45
```

```
NSEL,A,NODE,,46
NSEL,A,NODE,,47
NSEL,A,NODE,,48
NSEL,A,NODE,,49
NSEL,A,NODE,,50                 ! Junction at Shell
NSEL,A,NODE,,1101               ! Bottom Shell
NSEL,A,NODE,,53
NSEL,A,NODE,,1104
NSEL,A,NODE,,56
NSEL,A,NODE,,1107
NSEL,A,NODE,,59
NSEL,A,NODE,,1110
NSEL,A,NODE,,62
NSEL,A,NODE,,1113
NSEL,A,NODE,,65
NSEL,A,NODE,,100
NSEL,A,NODE,,1116
NSEL,A,NODE,,1118
NSEL,A,NODE,,102
NSEL,A,NODE,,1120
NSEL,A,NODE,,1122
NSEL,A,NODE,,104
NSEL,A,NODE,,1124
NSEL,A,NODE,,1126
NSEL,A,NODE,,106
NSEL,A,NODE,,1128
NSEL,A,NODE,,1130
NSEL,A,NODE,,108
NSEL,A,NODE,,1132
NSEL,A,NODE,,1134
NSEL,A,NODE,,110
NSEL,A,NODE,,1136
NSEL,A,NODE,,1138
NSEL,A,NODE,,112
NSEL,A,NODE,,1140
NSEL,A,NODE,,1142
NSEL,A,NODE,,114
NSEL,A,NODE,,116
NSEL,A,NODE,,1144
NSEL,A,NODE,,1146
NSEL,A,NODE,,118
NSEL,A,NODE,,120
NSEL,A,NODE,,122
NSEL,A,NODE,,124
NSEL,A,NODE,,126
NSEL,A,NODE,,128
NSEL,A,NODE,,130
NSEL,A,NODE,,132
NSEL,A,NODE,,134
NSEL,A,NODE,,136
NSEL,A,NODE,,138
NSEL,A,NODE,,140
NSEL,A,NODE,,142
NSEL,A,NODE,,144
NSEL,A,NODE,,146
NSEL,A,NODE,,148
```

```
NSEL,A,NODE,,150
NSEL,A,NODE,,152
NSEL,A,NODE,,154
NSEL,A,NODE,,156
NSEL,A,NODE,,158
NSEL,A,NODE,,160
NSEL,A,NODE,,162
NSEL,A,NODE,,164
NSEL,A,NODE,,166
NSEL,A,NODE,,168
NSEL,A,NODE,,170
NSEL,A,NODE,,172
NSEL,A,NODE,,174
NSEL,A,NODE,,176
NSEL,A,NODE,,178
NSEL,A,NODE,,180
NSEL,A,NODE,,182
NSEL,A,NODE,,184
NSEL,A,NODE,,186
NSEL,A,NODE,,188
NSEL,A,NODE,,190
NSEL,A,NODE,,193
NSEL,A,NODE,,196
NSEL,A,NODE,,199
NSEL,A,NODE,,202
NSEL,A,NODE,,205
NSEL,A,NODE,,208
NSEL,A,NODE,,211
NSEL,A,NODE,,214
NSEL,A,NODE,,217
NSEL,A,NODE,,220
NSEL,A,NODE,,223
NSEL,A,NODE,,226
NSEL,A,NODE,,229
NSEL,A,NODE,,232
NSEL,A,NODE,,235
NSEL,A,NODE,,238
NSEL,A,NODE,,241
NSEL,A,NODE,,244
NSEL,A,NODE,,985
NSEL,A,NODE,,980
NSEL,A,NODE,,247         ! Shell at Sealing Surface
NSEL,A,NODE,,248
NSEL,A,NODE,,870         ! Seal Stop (Plug)
NSEL,A,NODE,,869
NSEL,A,NODE,,862
NSEL,A,NODE,,1100
NSEL,A,NODE,,863         ! Plug Taper
NSEL,A,NODE,,864
NSEL,A,NODE,,865         ! Start Pug Bottom
NSEL,A,NODE,,858
NSEL,A,NODE,,851
NSEL,A,NODE,,844
NSEL,A,NODE,,837
NSEL,A,NODE,,830
NSEL,A,NODE,,823
```

```
NSEL,A,NODE,,803
NSEL,A,NODE,,783
NSEL,A,NODE,,763
NSEL,A,NODE,,743
NSEL,A,NODE,,723
NSEL,A,NODE,,713
NSEL,A,NODE,,693
NSEL,A,NODE,,673
NSEL,A,NODE,,653
NSEL,A,NODE,,633
NSEL,A,NODE,,613
SF,ALL,PRES,150

NSEL,S,NODE,,41,50
SFCUM,PRES,ADD                 ! at 54 g's
SF,ALL,PRES,2079.5             ! Vertical Pressure from 5 Baskets
NSEL,S,NODE,,50,65,3
NSEL,A,NODE,,1101,1113,3
NSEL,A,NODE,,1116,1146,2
NSEL,A,NODE,,100,116,2
SFCUM,PRES,ADD                 ! at 54 g's
sfgrad,pres,0,y,.69,-.3*54*.217
sf,all,pres,500+.3*54*.217*25.741
alls
LSWRITE,1



/COM **** LOAD 3: APPLYING 54g ACCELERATION ****
ACEL,,54
LSWRITE,2




/COM **** LOAD 1: 450 PSI INTERNAL PRESSURE ****
sfdele,all,pres
sfgrad,pres,0,y,.69,0
NSEL,S,NODE,,41      ! Bottom Plate
NSEL,A,NODE,,42
NSEL,A,NODE,,43
NSEL,A,NODE,,44
NSEL,A,NODE,,45
NSEL,A,NODE,,46
NSEL,A,NODE,,47
NSEL,A,NODE,,48
NSEL,A,NODE,,49
NSEL,A,NODE,,50            ! Junction at Shell
NSEL,A,NODE,,1101          ! Bottom Shell
NSEL,A,NODE,,53
NSEL,A,NODE,,1104
NSEL,A,NODE,,56
NSEL,A,NODE,,1107
NSEL,A,NODE,,59
NSEL,A,NODE,,1110
NSEL,A,NODE,,62
```

```
NSEL,A,NODE,,1113
NSEL,A,NODE,,65
NSEL,A,NODE,,100
NSEL,A,NODE,,1116
NSEL,A,NODE,,1118
NSEL,A,NODE,,102
NSEL,A,NODE,,1120
NSEL,A,NODE,,1122
NSEL,A,NODE,,104
NSEL,A,NODE,,1124
NSEL,A,NODE,,1126
NSEL,A,NODE,,106
NSEL,A,NODE,,1128
NSEL,A,NODE,,1130
NSEL,A,NODE,,108
NSEL,A,NODE,,1132
NSEL,A,NODE,,1134
NSEL,A,NODE,,110
NSEL,A,NODE,,1136
NSEL,A,NODE,,1138
NSEL,A,NODE,,112
NSEL,A,NODE,,1140
NSEL,A,NODE,,1142
NSEL,A,NODE,,114
NSEL,A,NODE,,116
NSEL,A,NODE,,1144
NSEL,A,NODE,,1146
NSEL,A,NODE,,118
NSEL,A,NODE,,120
NSEL,A,NODE,,122
NSEL,A,NODE,,124
NSEL,A,NODE,,126
NSEL,A,NODE,,128
NSEL,A,NODE,,130
NSEL,A,NODE,,132
NSEL,A,NODE,,134
NSEL,A,NODE,,136
NSEL,A,NODE,,138
NSEL,A,NODE,,140
NSEL,A,NODE,,142
NSEL,A,NODE,,144
NSEL,A,NODE,,146
NSEL,A,NODE,,148
NSEL,A,NODE,,150
NSEL,A,NODE,,152
NSEL,A,NODE,,154
NSEL,A,NODE,,156
NSEL,A,NODE,,158
NSEL,A,NODE,,160
NSEL,A,NODE,,162
NSEL,A,NODE,,164
NSEL,A,NODE,,166
NSEL,A,NODE,,168
NSEL,A,NODE,,170
NSEL,A,NODE,,172
NSEL,A,NODE,,174
```

```
NSEL,A,NODE,,176
NSEL,A,NODE,,178
NSEL,A,NODE,,180
NSEL,A,NODE,,182
NSEL,A,NODE,,184
NSEL,A,NODE,,186
NSEL,A,NODE,,188
NSEL,A,NODE,,190
NSEL,A,NODE,,193
NSEL,A,NODE,,196
NSEL,A,NODE,,199
NSEL,A,NODE,,202
NSEL,A,NODE,,205
NSEL,A,NODE,,208
NSEL,A,NODE,,211
NSEL,A,NODE,,214
NSEL,A,NODE,,217
NSEL,A,NODE,,220
NSEL,A,NODE,,223
NSEL,A,NODE,,226
NSEL,A,NODE,,229
NSEL,A,NODE,,232
NSEL,A,NODE,,235
NSEL,A,NODE,,238
NSEL,A,NODE,,241
NSEL,A,NODE,,244
NSEL,A,NODE,,985
NSEL,A,NODE,,980
NSEL,A,NODE,,247                ! Shell at Sealing Surface
NSEL,A,NODE,,248
NSEL,A,NODE,,870                ! Seal Stop (Plug)
NSEL,A,NODE,,869
NSEL,A,NODE,,862
NSEL,A,NODE,,1100
NSEL,A,NODE,,863                ! Plug Taper
NSEL,A,NODE,,864
NSEL,A,NODE,,865                ! Start Pug Bottom
NSEL,A,NODE,,858
NSEL,A,NODE,,851
NSEL,A,NODE,,844
NSEL,A,NODE,,837
NSEL,A,NODE,,830
NSEL,A,NODE,,823
NSEL,A,NODE,,803
NSEL,A,NODE,,783
NSEL,A,NODE,,763
NSEL,A,NODE,,743
NSEL,A,NODE,,723
NSEL,A,NODE,,713
NSEL,A,NODE,,693
NSEL,A,NODE,,673
NSEL,A,NODE,,653
NSEL,A,NODE,,633
NSEL,A,NODE,,613
SF,ALL,PRES,450
NSEL,S,NODE,,41,50
```

```
SFCUM,PRES,ADD                    ! at 54 g's
SF,ALL,PRES,2079.5                ! Vertical Pressure from 5 Baskets
NSEL,S,NODE,,50,65,3
NSEL,A,NODE,,1101,1113,3
NSEL,A,NODE,,1116,1146,2
NSEL,A,NODE,,100,116,2
SFCUM,PRES,ADD                    ! at 54 g's
sfgrad,pres,0,y,.69,-.3*54*.217
sf,all,pres,500+.3*54*.217*25.741
alls

/com,   add weight of lifting cap
nsel,s,node,,295,297
sfgrad,pres,0,y,.69,0
sf,all,pres,947.4

alls
LSWRITE,3




fini
/solu
save
LSSOLVE,1,3
FINI



/COM **** POSTPROCESSING ****
/POST1
SET,2
/TYPE,ALL,HIDC
/GLINE,ALL,0
RSYS,0
PLNSOL,S,INT
/DSCALE,,20
/REPLOT
NSEL,S,LOC,X,11.49,11.51
NSEL,R,LOC,Y,-0.33,149.63
PRNS,U,X
NALL
EALL
NSEL,S,LOC,X,1.356,11.26
NSEL,R,LOC,Y,141.87,143.39
PRNS,U,Y
NALL
EALL
LPATH,1,41
PRSECT
LPATH,9,49
PRSECT
LPATH,10,50
PRSECT
LPATH,50,52
```

```
PRSECT
LPATH,1101,1103
PRSECT
LPATH,62,64
PRSECT
LPATH,134,135
PRSECT
LPATH,180,181
PRSECT
LPATH,202,204
PRSECT
LPATH,232,234
PRSECT
LPATH,249,261
PRSECT
LPATH,262,264
PRSECT
LPATH,274,276
PRSECT
LPATH,277,279
PRSECT
LPATH,292,294
PRSECT
LPATH,601,641
PRSECT
LPATH,601,613
PRSECT
LPATH,603,683
PRSECT
LPATH,606,706
PRSECT
LPATH,766,806
PRSECT
LPATH,768,808
PRSECT
LPATH,750,810
PRSECT
LPATH,736,815
PRSECT
LPATH,869,874
PRSECT
LPATH,870,875
PRSECT
LPATH,851,865
PRSECT
LPATH,1290,1260
PRSECT
LPATH,1282,1262
PRSECT
LPATH,1283,1263
PRSECT
LPATH,1274,1254
PRSECT
LPATH,1276,1256
PRSECT
LPATH,431,434
```

```
PRSECT
LPATH,406,426
PRSECT
LPATH,921,498
PRSECT
LPATH,404,424
PRSECT
```

```
SET,3
/TYPE,ALL,HIDC
/GLINE,ALL,0
RSYS,0
PLNSOL,S,INT
/DSCALE,,20
/REPLOT
NSEL,S,LOC,X,11.49,11.51
NSEL,R,LOC,Y,-0.33,149.63
PRNS,U,X
NALL
EALL
NSEL,S,LOC,X,1.356,11.26
NSEL,R,LOC,Y,141.87,143.39
PRNS,U,Y
NALL
EALL
LPATH,1,41
PRSECT
LPATH,9,49
PRSECT
LPATH,10,50
PRSECT
LPATH,50,52
PRSECT
LPATH,1101,1103
PRSECT
LPATH,62,64
PRSECT
LPATH,134,135
PRSECT
LPATH,180,181
PRSECT
LPATH,202,204
PRSECT
LPATH,232,234
PRSECT
LPATH,249,261
PRSECT
LPATH,262,264
PRSECT
LPATH,274,276
PRSECT
```

```
LPATH,277,279
PRSECT
LPATH,292,294
PRSECT
LPATH,601,641
PRSECT
LPATH,601,613
PRSECT
LPATH,603,683
PRSECT
LPATH,606,706
PRSECT
LPATH,766,806
PRSECT
LPATH,768,808
PRSECT
LPATH,750,810
PRSECT
LPATH,736,815
PRSECT
LPATH,869,874
PRSECT
LPATH,870,875
PRSECT
LPATH,851,865
PRSECT
LPATH,1290,1260
PRSECT
LPATH,1282,1262
PRSECT
LPATH,1283,1263
PRSECT
LPATH,1274,1254
PRSECT
LPATH,1276,1256
PRSECT
LPATH,431,434
PRSECT
LPATH,406,426
PRSECT
LPATH,921,498
PRSECT
LPATH,404,424
PRSECT
```

COMPUTER RUN COVER SHEET

Project Number:	KH-8009-8
Computer Code:	ANSYS®-PC
Software Version:	5.4
Computer System:	Windows NT 4.0, Pentium® II Processor
Computer Run File Number:	KH-8009-8-03
Unique Computer Run Filename:	BBED.out
Run Description:	MCO Bare Bottom End Drop
Run Date / Time:	17 December 1998 13:21:45 PM

FOR JOE NICHOLS 2/9/99

Prepared By: Joseph C. Nichols Date

FOR MIKE COHEN 2/9/99

Checked By: Mike Cohen Date

PARSONS

CLIENT: **DE&S Hanford, Inc.** **FILE NO:** **KH-8009-8-03**
PROJECT: **MCO Design** **DOC. NO.: HNF-SD-SNF-DR-003, Rev. 2 , Appendix 5**

COMPUTER RUN COVER SHEET

Project Number:	KH-8009-8
Computer Code:	ANSYS®-PC
Software Version:	5.3
Computer System:	Windows 95, Pentium® II Processor
Computer Run File Number:	KH-8009-8-03
Unique Computer Run Filename:	MCObtm990204.inp
Run Description:	Support Plate Weld Analysis Input
Run Date / Time:	9 February 1999 9:31:45 AM

DBarlow 2-9-99

Prepared By: Dwight Barlow Date

2/9/99

Checked By: Henry Averette Date

REVISION	0	1	2		**PAGE 118**
PREPARED BY / DATE	**ZGS 4/17/97**	**ZGS 07/14/98**	DB **02/09/99**		**OF 125**
CHECKED BY / DATE	**JN 4/17/97**	**HA 07/14/98**	HA **02/09/99**		

```
/BATCH,LIST
/title,MCO SHELL BOTTOM, 990209B
/COM  MCO SHELL BOTTOM, 450 PSI, 270F, 5/16" WELD
/COM   fn = MCObtm990204
/FILENAME,MCObtm990204
/PREP7

/triad,ltop

*afun,deg
/COM ELEMENT TYPES
ET,1,SOLID 45          ! SHELL BTM
ET,2,SOLID 45          ! BASKET SUPT PLATE
ET,3,SOLID 45          ! PROCESS TUBE GUIDE
ET,4,SOLID 45          ! SHELL WALL
ET,5,SOLID 45          ! BASKET SUPT WELD
ET,6,SOLID 45          ! GUIDE WELD

ET,7,SHELL63           ! FOR MODEL CONSTRUCTION ONLY
R,7,.1

/COM NO REAL CONSTANTS REQD

/COM  MATERIAL PROPERTIES, SA-182 F304L AT 270F
MP,EX,1,27.18E+6
MP,NUXY,1,.3
MP,DENS,1,.283

/COM NODES

/CON SHELL BOTTOM
N,1,0,0,0
N,4,1.25,0,0
FILL
N,6,2.13,0,0
FILL,4,6
N,15,10.58,0,0
FILL, 6,15
N,19,11.4049,0,0
FILL,15,19

N,101,0,1.13,0
N,104,1.25,1.13,0
FILL
N,106,2.13,2.01,0
FILL,104,106
N,115,10.58,2.01,0
FILL, 106,115
N,116,11.0125,2.01,0
N,119,12.04,2.01,0
```

```
FILL,116,119

FILL,1,101,4,21,20,19,1

N,120,11.3661,2.1564,0
N,122,12.04,2.1564,0
FILL
N,123,11.5125,2.51,0
N,125,12.04,2.51,0
FILL
N,126,11.5125,2.74,0
N,128,12.04,2.74,0
FILL                     ! TOP OF SHELL WELD
N,129,11.4925,3,0        ! SHELL WALL
N,130,12.04,3,0
NGEN,7,2,129,130,1,0,.85,0

/COM  CYLINDRICAL COORD SYSTEM
CLOCAL,11,1,,,,,-90              ! AT GLOBAL ORIGIN, Z IS GLOBAL Y

NGEN,2,1400,1,142,1,0,30,0        1 FAR SIDE NODES

CSYS,0                          ! GLOBAL CART COORD SYST

NSEL,S,LOC,Z,-.01,.01        ! FRONT FACE
NSEL,R,LOC,X,2.1,10.6        ! UNDER  WELD
NGEN,2,200,ALL,,,0,0,-.25
NSEL,R,LOC,Z,-.01,.01            ! RIB
NGEN,2,400,ALL,,,,,-.5625        ! 5/16" WELD

NSEL,S,LOC,Z,-.01,.01            ! FRONT FACE BEYOND WELD
NSEL,R,LOC,X,10.6,13
CSYS,11                        ! CYL.
NGEN,3,200,ALL,,,0,1.52,0
NALL

FILL,406,1406,4,606,200,6,20
FILL,415,1415,4,615,200,6,20
CSYS,0                           ! CART.
FILL,606,615,8,607,1,4,200
FILL,626,635,8,627,1,4,200
FILL,646,655,8,647,1,4,200
FILL,666,675,8,667,1,4,200
FILL,686,695,8,687,1,4,200
FILL,706,715,8,707,1,4,200
CSYS,11                         ! CYL
FILL,416,1416,4,616,200,4,1     ! FILLS BTM BEYOND WELD
FILL,436,1436,4,636,200,4,1
FILL,456,1456,4,656,200,4,1
FILL,476,1476,4,676,200,4,1
```

```
FILL,496,1496,4,696,200,4,1
FILL,516,1516,4,716,200,4,1

FILL,520,1520,4,720,200,3,1
FILL,523,1523,4,723,200,3,1
FILL,526,1526,4,726,200,3,1

FILL,529,1529,4,729,200,7,2      ! INNER FACE OF SHELL
FILL,530,1530,4,730,200,7,2      ! OUTER FACE OF SHELL

 CSYS,11                         ! CYL.
FILL,5,1405,6,205,200,6,20       ! CENTER OF SHELL BOTTOM
FILL,4,1404,6,204,200,6,20
FILL,3,1403,6,203,200,6,20      ! END OF SHELL BOTTOM

CSYS,0                          ! CART.
N,1603,1.25,2.01,0              ! BASKET SUPT
N,1604,1.375,2.01,0
N,1605,1.625,2.01,0
N,1606,2.13,2.01,0
N,1615,10.58,2.01,0
FILL
N,1616,11.08,2.01,0
NGEN,2,20,1603,1616,1,0,.3125,0
NGEN,2,40,1603,1616,1,0,.65,0
NGEN,3,20,1644,1656,1,0,.295,0
NSEL,S,NODE,,1600,1699,1
NGEN,3,200,ALL,,,0,0,-.25
NALL

N,2001,.6875,2.66,0               ! TUBE GUIDE
N,2002,1.1875,2.66,0
N,2003,1.375,2.66,0
NGEN,3,20,2001,2003,1,0,.295,0
NGEN,6,20,2041,2042,1,0,.509,0
CSYS,11                           ! CYL.
NGEN,2,200,2001,2142,1,0,10.3,0
NGEN,2,400,2001,2142,1,0,20.6,0
NGEN,2,600,2001,2142,1,0,30,0         ! END OF TUBE GUIDE

CSYS,0                          ! CART.
NALL
NLIST


/COM ELEMENTS

/COM SHELL BOTTOM

TYPE,1
```

```
REAL,1

E,1,2,1402,21,22,1422              ! SHELL BOTTOM
E,2,3,403,1402,22,23,423,1422
E,1402,403,1003,1422,423,1023
E,1402,1003,1403,1422,1023,1423
E,3,4,404,403,23,24,424,423
E,403,404,604,1003,423,424,624,1023
E,1003,604,1004,1403,1023,624,1024,1423
E,1403.,1004,1404,1423,1024,1424
E,4,5,205,404,24,25,225,424
E,404,205,405,604,424,225,425,624
E,604,405,805,1004,624,425,825,1024
E,1004,805,1005,1404,1024,825,1025,1424
E,1404,1005,1405,1424,1025,1425
E,5,6,206,205,25,26,226,225
E,205,206,406,405,225,226,426,425
E,405,406,606,805,425,426,626,825
E,805,606,806,825,626,826
E,805,806,1006,1005,825,826,1026,1025
E,1005,1006,1206,1405,1025,1026,1226,1425
E,1405,1206,1406,1425,1226,1426
EGEN,5,20,-20

E,6,7,207,206,26,27,227,226
EGEN,7,200,-1
EGEN,5,20,-7
EGEN,13,1,-35

E,116,120,117,316,320,317           ! DIFFERENT ORIENTATION
EGEN,7,200,-1
E,117,120,121,118,317,320,321,318
EGEN,2,1,-1
EGEN,7,200,-2
EGEN,3,3,-14
E,126,129,127,326,329,327          ! SHELL WALL
E,127,129,130,327,329,330
E,127,130,128,327,330,328
EGEN,7,200,-3
E,129,131,132,130,329,331,332,330
EGEN,6,2,-1
EGEN,7,200,-6                      ! END OF BOTTOM PLATE

/COM BASKET SUPPORT
TYPE,2
E,1603,1604,1804,1803,1623,1624,1824,1823
EGEN,2,1,-1
E,1623,1624,1824,1823,1643,1644,2203,1843
E,1624,1625,1825,1824,1644,1645,1845,2203
E,1644,1645,1845,2203,1664,1665,1865,2223
```

```
E,1664,1665,1865,2223,1684,1685,1885,2243
E,1605,1606,306,1805,1625,1626,1826,1825
E,1625,1626,1826,1825,1645,1646,1846,1845
EGEN,3,20,-1
EGEN,10,1,-4
E,1615,1635,1636,315,1835,1836
E,1635,1636,1836,1835,1655,1656,1856,1855
EGEN,3,20,-1

/COM TUBE GUIDE
TYPE,3
E,2001,2002,2202,2201,2021,2022,2222,2221
EGEN,2,1,-1
EGEN,2,20,-2
E,2041,2042,2242,2241,2061,2062,2262,2261
EGEN,5,20,-1
EGEN,3,200,-9

/COM BASKET SUPPORT WELD
TYPE,5
E,306,506,1826,307,507,1827
EGEN,9,1,-1

/COM GUIDE WELD
E,2203,1845,2403,2223,1865,2423
EGEN,2,20,-1

ELIST

/COM BOUNDARIES
CSYS,11                    ! CYL
NROTAT,ALL
NSEL,S,LOC,Y,-.01,.01
DSYM,SYMM,Y,11
NSEL,S,NODE,,1400,1600,1
NSEL,A,NODE,,2600, 2800
DSYM,SYMM,Y,11

NSEL,S,LOC,Z,8,8.5
D,ALL,UZ,0
NALL

CSYS,0                     ! CAT.

EALL
NALL
ALLS

FINI
```

```
/COM  END OF MODEL

 /SOLUTION

! ********************** LS-1 **********************

ESEL,S,TYPE,,1
NSLE
CSYS,11
NSEL,R,LOC,Z,1.129,1.131
NSEL,R,LOC,X,-.1,1.26
SF,ALL,PRES,450

NSEL,S,NODE,,104,1504,200
NSEL,A,NODE,,105,1505,200
NSEL,A,NODE,,106,1506,200
SF,ALL,PRES,450

NSEL,S,LOC,Z,2.0,2.015
NSEL,R,LOC,X,-.1,11.1
SF,ALL,PRES,450

NSEL,S,NODE,,116,1516,200
NSEL,A,NODE,,120,1520,200
NSEL,A,NODE,,123,1523,200
SF,ALL,PRES,450

NSEL,S,LOC,X,11.49,11.52
NSEL,R,LOC,Z,2,8.5
SF,ALL,PRES,450

CSYS,0                    ! CART

NALL
EALL

SAVE
LSWRITE

LSSOLVE,1
SAVE
FINI
```

COMPUTER RUN COVER SHEET

Project Number:	KH-8009-8
Computer Code:	ANSYS®-PC
Software Version:	5.3
Computer System:	Windows 95, Pentium® II Processor
Computer Run File Number:	KH-8009-8-03
Unique Computer Run Filename:	MCObtm990204.out
Run Description:	Support Plate Weld Analysis Output
Run Date / Time:	9 February 1999 9:33:21 AM

DBarlow 2-9-99

Prepared By: Dwight Barlow Date

2/9/99

Checked By: Henry Averette Date

REVISION	0	1	2		PAGE 125
PREPARED BY / DATE	ZGS 4/17/97	ZGS 07/14/98	02/09/99		OF 125
CHECKED BY / DATE	JN 4/17/97	HA 07/14/98	02/09/99		

PARSONS

CALCULATION PACKAGE

FILE NO: KH-8009-8-04
DOC NO: HNF-SD-SNF-DR-003, Rev 2, Appendix 6
PAGE 1 of 95

PROJECT NAME:
MCO Final Design

CLIENT:
DE&S Hanford, Inc.

CALCULATION TITLE:
STRESS ANALYSIS OF THE LIFTING CAP AND CANISTER COLLAR

PROBLEM STATEMENT OR OBJECTIVE OF CALCULATION:

PERFORM A STRESS ANALYSIS OF THE LIFTING CAP AND CANISTER COLLAR IN ACCORDANCE WITH REVISION 5 OF THE MCO PERFORMANCE SPECIFICATION.
CRITERIA ARE BASED ON THE ASME CODE.

REVISION 1 INCORPORATES THE NEW DESIGN TEMPERATURE OF 132°C, THE NEW DESIGN PRESSURE OF 450 PSIG, THE NEW LIFTING CAP GEOMETRY AND NEW MATERIAL PROPERTIES.

REVISION 2 INCORPORATES THE NEW MATERIAL FOR THE SHELL COLLAR, THE NEW THREAD RELIEF THICKNESS AND THE NEW LIFTING CAP GEOMETRY. ADDED SECTION 11. DELETED REFERENCE TO N14.6.

DOCUMENT REVISION	AFFECTED PAGES	REVISION DESCRIPTION	PREPARED BY INITIALS / DATE	CHECKED BY INITIALS / DATE	APPROVED BY INITIALS / DATE
0	1-90	Initial Issue	Zachary Sargent Pages 1-35 Pages 46-73 Bob Winkel Pages 36-45 Pages 74-90	Joe Nichols Pages 1-35 Pages 46-73 Ward Ingles Pages 36-45 Pages 74-90	Charles Temus
1	1-89	Revised to new design temperature, pressure, geometry & material properties.	Zachary Sargent Pages 1-11, 15-21, 29-49 Henry Averette Pages 12-14 Dwight Barlow Pages 22-28, 50-89	Henry Averette Pages 1-11, 15-89 Dwight Barlow Pages 12-14	Charles Temus
2	All	Revised as listed above.	DWIGHT BARLOW DB 2-12-99 For Zachary SARGENT ZGS	2/12/99	Charles Temus 2/12/99

CONTENTS

LIST OF TABLES

LIST OF FIGURES

APPENDICES

1. INTRODUCTION

The canister collar is welded to the shell to provide a sealing surface for the shield plug seal and has a double lead buttress thread for positioning of the locking ring. After Cold Vacuum Drying of the MCO is completed, a cap (referenced here as the lifting cap) is placed over the shield plug and welded to the canister collar. This cap is designed to accommodate a lifting grapple with six gripping shoes. The cap is modified to include a plug and cover flange through the top for the purposes of leak testing and Helium back filling.

This calculation documents the evaluation of the lifting cap and canister collar under lifting and pressure loads. It also documents the evaluation of the weld at the lifting cap-canister collar interface. The evaluations are performed based on the criteria of the ASME Code. A combination of hand calculations and ANSYS© analysis is used.

2. REFERENCES

1. "Performance Specification for the Spent Nuclear Fuel Multi-Canister Overpack," Specification HNF-S-0426, Revision 5, December 1998.
2. ASME Boiler and Pressure Vessel Code, Section II - Materials, Part D - Properties, 1998 Edition.
3. Not used
4. Roark, Raymond J., & Young, Warren C., "Formulas for Stress and Strain", 5th Edition, McGraw-Hill Book Company, New York, 1975.
5. ASME Boiler and Pressure Vessel Code, Section III, Subsection NG - Material, 1998 Edition.
6. Duke Engineering & Services Hanford, Inc, Specifications Drawings, Drawing H-2-828042, Sheets 1, 2 and 3, Revision 1.
7. Swanson Analysis System, Inc., ANSYS© Engineering Analysis System User's Manual, Volumes I, II and III, Version 5.4, December 1997 and Version 5.3, June 1996.

8. "Buttress Inch Screw Threads- 7°/45° Form With 0.6 Pitch Basic Height of Thread Engagement," ANSI B1.9 - 1973, American Society of Mechanical Engineers, New York, New York.

9. Green, R. E. and McCauley, C. J., Machinery's Handbook, 25th Edition, Industrial Press, New York, New York, 1996.

10. ASME Boiler and Pressure Vessel Code, Section III, Subsection NB - Class 1 Components, 1998 Edition.

3. ASSUMPTIONS

1. Pressure is applied uniformly
2. Others as noted

4. GEOMETRY

Figure 1 shows the dimensions and locations of the grapples on the MCO Handling Machine (MHM).

Please refer to Drawings H-2-828042, sheets 1, 2 and 3 for lifting cap and canister collar dimensions.

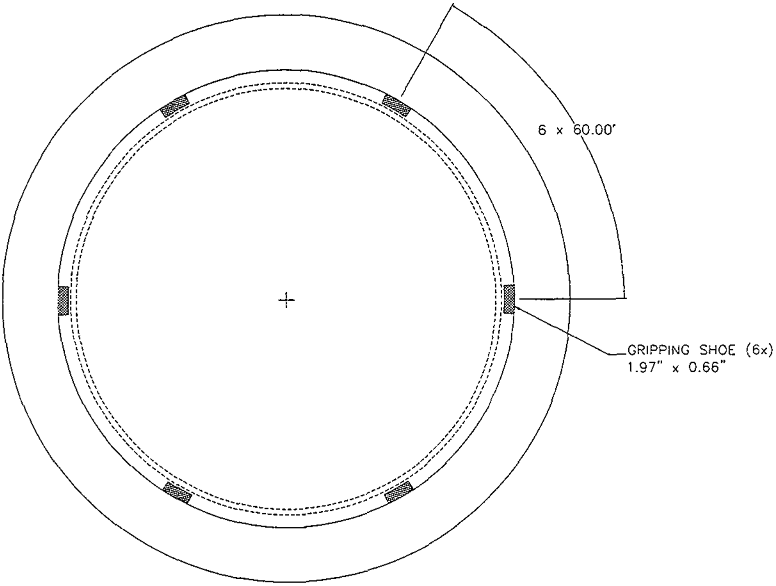

Figure 1: Lifting Cap with Gripping Shoe Configuration

Note: This illustration does not show the helium leak test hole.

5. MATERIAL PROPERTIES

The lifting cap is fabricated from SA-182 F304L stainless steel and the canister collar is fabricated from dual certified SA-182 Type F304L/F304 stainless steel. Values are taken from Section II, Part D of the Code (See [2]) and are listed in Table 1.

Table 1: ASME Code Material Properties for Lifting Cap & Canister Collar

SA -182 F304L Forging

	70° F	200° F	300° F	270° F
E - psi	**28.3×10^6**	**27.6×10^6**	**27.0×10^6**	**27.18×10^6**
S_M - psi	**16,700**	**16,700**	**16,700**	**16,700**
S_Y- psi	**25,000**	**21,300**	**19,100**	**19,760**
S_U- psi	**70,000**	**66,200**	**61,500**	**62,910**
Mean Coefficient of Thermal Expansion from 70° to Temp. - in/in/°F x 10^{-6}				
	100°F	200°F	300°F	270°F
α-in/in/°F	**8.55×10^{-6}**	**8.79×10^{-6}**	**9.00×10^{-6}**	**8.97×10^{-6}**

SA -182 F304 Forging

	70° F	200° F	300° F	270° F
E - psi	**28.3×10^6**	**27.6×10^6**	**27.0×10^6**	**27.18×10^6**
S_M - psi	**20,000**	**20,000**	**20,000**	**20,000**
S_Y- psi	**30,000**	**25,000**	**22,500**	**23,250**
S_U- psi	**75,000**	**71,000**	**66,000**	**67,500**
Mean Coefficient of Thermal Expansion from 70° to Temp. - in/in/°F x 10^{-6}				
	100°F	200°F	300°F	270°F
α-in/in/°F	**8.55×10^{-6}**	**8.79×10^{-6}**	**9.00×10^{-6}**	**8.97×10^{-6}**

SA-193 Gr. B8S or B8SA

Material	Elastic Modulus, psi (270°F)	S_m, psi (270°F)
SA 193 Grade B8S or B8SA (Bolting)	27.2×10^6	11,600

6. ACCEPTANCE CRITERIA

This calculation considers (1) lifting loads and (2) pressure loads. Criteria for each are described below.

6.1 Lifting Loads

Per Section 4.11 of the MCO Specification (See [1]), the lifting cap design "shall be capable/configured for lifting the MCO with the same equipment described in Section 4.13." Section 4.13 of [1] describe such equipment as a " lifting ring with a 12 ton lifting capacity." Therefore the lifting cap shall have a lifting capacity of 12 ton. Furthermore, " the lifting ring design and cover cap lifting area must exhibit a safety factor of three on material yield and five on material ultimate strength. These allowables are applied to the "membrane plus bending" component of stress. At the maximum lifting temperature of 132°C, the allowables are:

$$\frac{S_y}{3} = \frac{19.8\ ksi}{3} = 6.6\ ksi$$

$$\frac{S_u}{5} = \frac{58.0\ ksi}{5} = 11.6\ ksi$$

$$\Rightarrow use{:}\ P_m + P_b \leq 6.6 \quad ksi$$

6.2 Pressure Loads

Per Section 4.11 of [1], " the cap shall be capable of withstanding the pressure rating of 450 psig at 132°C." The MCO specification does not provide criteria for the lifting cap and canister collar under these loads, thus the normal (Level A) condition criteria of Subsection NG will be used. For membrane and membrane plus bending stresses the allowable stresses of Table 2 are applied.

6.3 Welds

Per Section 4.17 of [1], " All MCO pressure boundary welds and welds bearing the fully loaded MCO must be designed for and pass 100% volumetric examination (x-rays or ultrasonic) per ASME requirements" and " All MCO fabricator pressure boundary welds shall be made in accordance with ASME Section III, Division I, NB-3350". Therefore the stress limits for full penetration groove weld shall not exceed the stress values for the base metal being joined and the allowables of Table 2 apply.

Table 2: Level A Allowables 304L

Temperature		S_m	Design / Level A Stress Limits	
° F	° C	(From Table 1)	P_m (S_m)	(P_m or P_L) + P_b ($1.5S_m$)
270	132	16.70 ksi	16.70 ksi	25.10 ksi

Note: Design & Level A stress limits for NG-3221 & NG-3222, respectively.

7. LOAD CONDITIONS & COMBINATIONS

The MCO lifting cap and canister collar are evaluated for the following case:

1. Lifting of the MCO and contents while at 132°C and 450 psig. This loading is evaluated using criteria based on the safety factors listed in Section 6.1. The canister collar and the weld at the cap-collar interface are evaluated using Subsection NG.

8. STRESS ANALYSIS - HAND CALCULATIONS

The lifting cap is evaluated using hand calculations and ANSYS® analysis. Since there are no practical hand calculations that may verify the stresses incurred in the lifting ear due to lifting, the following sections (8.1 thru 8.3) are merely a proof that the pressure and lifting loads were applied properly in the ANSYS© analysis. The section below the buttress threads acts as a thread relief and is the thinnest portion of the vessel. This is a critical section and an evaluation was performed using ANSYS® analysis. In a small portion of the thread relief stesses beyond the yield strength were encountered. An analysis was undertaken using hand calculations which determined the sum of membrane and bending stresses at the discontinuity are within the yield criteria and the results from the ANSYS® analysis (Section 10) should be considered as peak stresses.

8.1 Lifting Load

The lifting cap must support the total weight of the MCO and contents for lifting. Per Section 4.13 of [1], the lifting cap must also have a total lifting capacity of 12 ton (24,000 lb.). A lifting grapple with six (6) gripping shoes will be used to lift the MCO and its contents by the lifting cap. Figure 1 displays the gripping shoe configuration for the lifting grapple - lifting cap interface. The analysis presented here will cover only a 60° sector (360°/6 shoes).

Each gripping shoe will carry a weight W of

$$P = \frac{24000 lb}{6} = 4000 \text{ lbs}$$

The outer diameter of the MCO shell is 24.08 in. and the inner diameter is 23.025 in. Therefore the cross sectional area of the shell is

$$A_{shell} = \frac{\pi\left(D_o^2 - D_i^2\right)}{4} = \frac{\pi\left(24.08^2 - 23.025^2\right)}{4}$$

$$A_{shell} = 39.01 \text{ in}^2$$

and the area of the section is

$$A_{\sec tion} = \frac{39.01 in^2}{6} = 6.50 \text{ in}^2$$

Therefore the stress through the shell due to the lifting load is

$$\sigma_L = \frac{P}{A_{\sec tion}} = \frac{4000}{6.50} = 615 \text{ psi}$$

The thinnest point in the shell is located at the thread relief in the canister collar. Since it will also see the lifting load through its section, it is analyzed.

The minimum outer diameter of the MCO shell at the thread relief is 25.28 inches and the maximum inner diameter at the base of the threads is 24.530 inches. The thread relief cross sectional thickness is therefore 0.373 inches minimum. The minimum cross-sectional area of the shell through that section is

$$A_{collar} = 30.53 \text{ in}^2$$

and the area of the section (1/6 of total area. A_{collar}) is:

$$A_{collar\ section} = 5.09 \text{ in}^2$$

Therefore the axial stress through the canister collar due to the lifting load is

$$\sigma_{collar} = \frac{P}{A_{collar\,section}} = \frac{4000}{5.09} = 786 \text{ psi}$$

8.2 Pressure Load

As stated in Section 6.2 above, the lifting cap must be able to withstand an internal pressure of 450 psig. The MCO shell has a thickness of 0.5 in. and its inside diameter is 23.00 in. The stress through the shell due to the pressure load is then

$$\sigma_P = \frac{pR}{t}$$

where p = internal pressure = 450 psig

R = mean radius = (24.00+23.00)/4 = 11.75 in.

t = thickness of MCO shell = 0.5 in.

Therefore

$$\sigma_P = \frac{(450)(11.75)}{0.50} = 10575 \text{ psi}$$

At its thinnest point, the thread relief has a minimum thickness of 0.373 inches below the canister collar buttress threads. The stresses through the thread relief due to the pressure are then:

R = (25.280+24.530)/4 = 12.453 in.

$$\sigma_{ap} = \frac{(450)(12.453)}{2(0.373)} = 7512 \text{ psi - axial stress}$$

$$\sigma_{hp} = \frac{(450)(12.453)}{0.373} = 15024 \text{ psi - hoop stress at the thread relief.}$$

8.3 Lifting and Pressure Loads

8.3.1 Upper Shell

When both lifting and pressure loads are applied together, the stress through the shell due to these loads then becomes

$$\sigma_{a(L+p)} = \frac{pR}{2t} + \frac{P}{A_{\sec tion}}$$

$\sigma_{a(L+p)} = 5288 + 615 = 5903$ psi - axial stress at the shell

$\sigma_{h(L+p)} = 10575$ psi - hoop stress at the shell

8.3.2 Thread Relief

The stress through the thinnest point is at the thread relief, which is within the closure portion of the vessel. Subsection NB-3227.3 of the ASME Code [10] addresses "nonintegral connections", including "screwed in plugs" and "shear ring closures", which are subject to failure "by bell mouthing or other types of progressive deformation". Such failures are addressed in NB-3227.3 by limiting the primary plus secondary stress intensities to the material yield strength.

The stresses in the thread relief with pressure retained are a function of the preload and lifting load only; if the pressure is not maintained, the requirements no longer follow the requirement to limit stresses to yield per Subsection NB-3227.3 but revert to the allowables of Subsection NB-3222.2 and are evaluated in Section 10.3.

As the bearing load of the thead engagement is assumed to be at the pitch diameter, the offset from the thread pitch location to the median of the thread relief cross-section produces a bending moment acting circumferentially at the upper end of the thread relief:

Pitch diameter of internal thread - E_n = D (major diameter) - h (0.6pitch) [8]

= 24.50 -0.6(.25) = 24.35 inch

The mean radius of the thread relief is 12.453, therefore the offset is :

$$\text{Offset} = 12.453 - \frac{24.35}{2} = 0.278 \text{ inch}$$

The maximum preload is 200,000 lb (conservative upper bound from Appendix 4) and the moment per unit length around the thread relief is:

$$M_0 = \frac{(0.278)(200{,}000)}{2\pi(12.453)} = 710.59\ \frac{\text{in - lb}}{\text{in}}$$

Using Ref. [4] ,Page 462, Case 11:

Input: Length =140 inch
Mean radius = 12.453 in.
Elastic Modulus = 29 x 10^6 psi
Poisson's Ratio = 0.30
Distance from end of cylinder to point of load = 4.295 - .375 = 3.92 inch
Distance to point of interest = 3.92 inch

$$\lambda = \left(\frac{3(1 - \nu^2)}{R^2 t^2}\right)^{\frac{1}{4}} = 0.515\ \text{in}^{-1}$$

$$D = \frac{E(t^3)}{12(1-\nu^2)} = 1.378 \text{ x } 10^5 \text{ lb in.}$$

$$\text{M (point of interest)} = 355.29\ \frac{\text{lb - in}}{\text{in}}$$

$\sigma_{\text{axial,bending}}$ = Meridional Bending Stress = 15,320 psi (axial direction)

$\sigma_{\text{hoop,membrane}}$ = Circumferential Membrane Stress = 76 psi (hoop direction)

$\sigma_{\text{hoop,bending}}$ = Circumferential Bending Stress = 4,597 psi (hoop direction)

The above stresses are secondary as they result from bending at a gross structural discontinuity per NB-3213.9(b.).

The direct axial stress is a combination of the preload plus the lifting load:

$$\sigma_{\text{axial,direct}} = \frac{\text{Preload} + \text{Lifting Load}}{\text{Area}}$$

$$= \frac{200{,}000 + 24000}{3.53} = 7{,}337 \text{ psi}$$

$$\sigma_a = \text{total axial stress} = \sigma_{\text{axial,direct}} + \sigma_{\text{axial,bending}}$$

$$= 7{,}337 + 15{,}320 = 22{,}657 \text{ psi}$$

$$\sigma_h = \text{total hoop stress} = \sigma_{\text{hoop,membrane}} + \sigma_{\text{hoop,bending}}$$

$$= 76+4{,}597 = 4{,}673 \text{ psi}$$

Table 3: Canister Collar Thread Relief Hand Calculations

Stress	Stress Category	Allowed	Section 8.3.2 Results	Ratio
σ_{AXIAL}	P_M+Q	23,250 psi	22,657 psi	0.97
σ_{HOOP}	P_M+Q	23,250 psi	4,673 psi	0.20

$$\text{Ratio} = \frac{\text{Result}}{\text{Allowed}}$$

Table 3 is a compilation of hand calculation results of Section 8.3.2 for the thread relief section of the canister collar. The stress levels are within the requirements of Subsection NB-3227.3. Note that the allowed value in the above table is a special stress case, limited to yield stress.

9. ANSYS© ANALYSIS

In addition to the hand calculations described in Section 8, an evaluation of the lifting cap and canister is performed . The model is a 3-D, 180° section and is developed with SOLID45 elements with 3 degrees of freedom at each node.

9.1 **Stress Analysis**

9.1.1 Boundary Conditions

A 180° section of the lifting cap and canister collar is modeled using ANSYS Finite Element Analysis. Symmetry boundary conditions are applied at the edges of the models. The bottom edge is fixed in the vertical direction to approximate the lifting configuration.

9.1.2 Loading

Two loads are applied to the models. A 450 psi pressure is applied uniformly to the inside of the model . In order to apply the lifting load properly, the model is built using a series of slices of different thickness and refining the mesh in the appropriate area. The intent of this is to apply the lifting load on few elements which represent the area of a gripping shoe. Per Section 4.13 of [1] "The shield plug shall feature an integrally machined axisymmetric lifting ring with a 12 ton lifting capacity when gripped with six equally spaced 1.97" tangential length by 0.66" radial contact length grippers". The area of the gripper is approximated to be 1.3 in^2 (1.97" x 0.66"). Figure 1 shows the six elements representing that area. Since the gripping shoe has an area of 1.3 in^2, the total load F, applied at each set of elements representing the lifting areas, is

$$A_{shoe} = 1.3 \text{ in}^2$$

$$P = 4000 \text{ lbs} \quad \text{(See Section 8.1)}$$

$$F = \frac{P}{A_{shoe}} = \frac{4000}{1.3} = 3077 \text{ psi}$$

A load of 3,100 psi is conservatively used as the basis for the lifting load. When applied, lifting load is multiplied by 3 and the results are compared to the yield strength of 304, in order to show compliance with Section 6.1. Since one third of yield is less than one fifth of ultimate for 304L stainless steel and one third of yield is the controlling allowable, no further analysis is required.

9.1.3 Results

Stresses are classified as membrane plus bending stresses: $P_m + P_B$. Since Section 6.1 limits these stresses to the linear portion of membrane plus bending tensile, or the combined shear stresses in a section, peak stresses are ignored.

Table 4 compares the calculated results of Sections 8.1 thru 8.3 to the ANSYS analysis results. ANSYS results are obtained using LPATH/PRSECT command. Stress results for several locations on the assembly are summarized and ratioed to the allowables in Tables 5 and 6.

For the lifting cap, the corresponding ANSYS input and output files are caplift.inp and caplift.out, respectively.

Table 4: Hand vs. ANSYS Rsults

Stress	Stress Category	Allowed	Section 8 Results	ANSYS Results	Ratio
S_L	P_M	31.94 ksi	615 psi	762 psi	0.02
S_{Hoop}	P_M	31.94 ksi	10575 psi	10,060 psi	0.32
S_{L+P}	P_M	31.94 ksi	5903 psi	5,462 psi	0.17

$$\text{Ratio} = \frac{\text{Calculated stress}}{\text{Allowable Stress}}$$

Table 5: ANSYS Results—Pressure① + Lifting

Location	Criteria	Stress Intensities		Ratio
		Maximum	Allowed $P_M + P_B$	
Lifting Ear	Section 6.1	9,955 psi	19,760 psi	0.50
Lifting Cap Transition	Section 6.1	13,450 psi	19,760 psi	0.68
Weld	ASME Section NG	10,270 psi	25,100 psi	0.41
Bottom of Collar②	ASME Section NG	6,894 psi	34,875 psi	0.20

Notes:

① Lifting load of 3 times the design load is applied in the analysis. All stress results include a 450 psi internal pressure.

② Although it is non-conservative to include pressure, the effect is small

Table 6: Ansys Model Stress Report Section

Component	Inside Node	Outside Node
Lifting Ear	7485	7487
	7486	7488
	10485	10487
	10486	10488
	13485	13487
	13486	13488
	25485	25487
	25486	25488
	28485	28487
	28486	28488
	31485	31487
	31486	31488
	43485	43487
	43486	43488
	49485	49487
	49486	49488
Lifting Cap Transition	7587	7591
	10587	10591
	13587	13597
	25587	25591
	28587	28597
	31587	32591
	43587	23591
	46587	46591
	49587	49591
Collar Transition	6274	6276
	9274	9276
	12274	12276
	24274	24276
	27274	27276
	20274	20276
	42274	42276
	45274	45276
	48274	48276
Welds	6302	6304
	9302	9304
	12302	12304
	24302	24304
	27302	27304
	30302	30304
	42302	42304
	45302	45304
	48302	48304

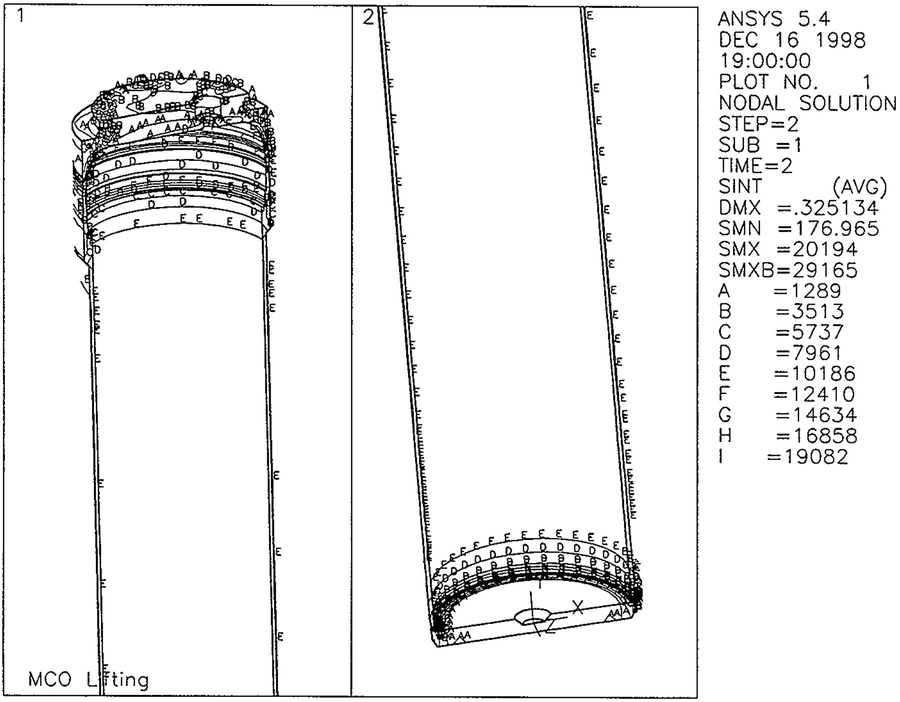

Figure 2: Stress Intensities – Upper & Lower Front Views

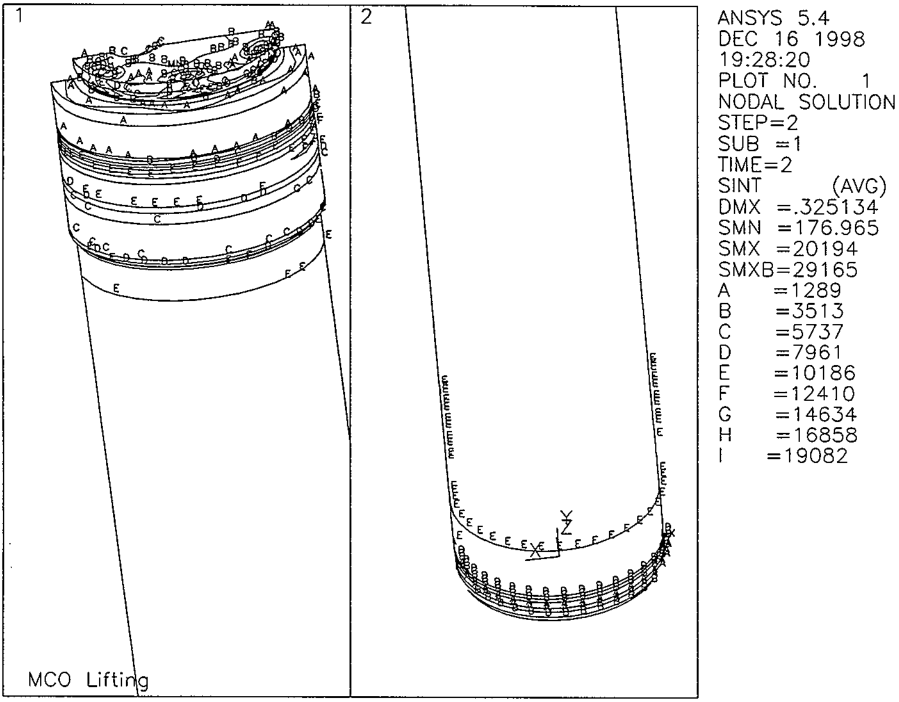

Figure 3: Stress Intensities – Upper & Lower Back Views

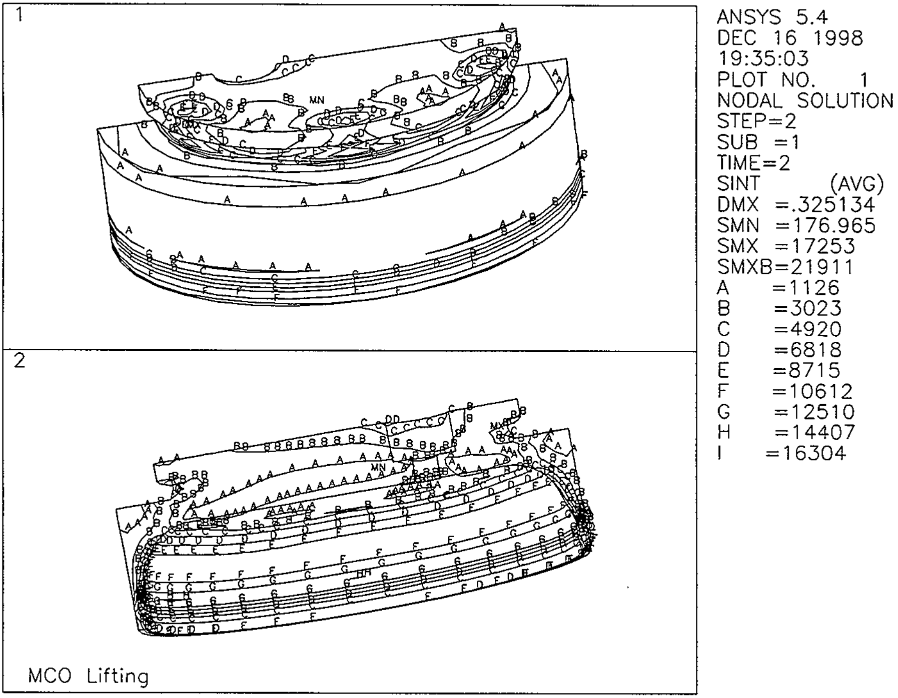

Figure 4: Stress Intensities Lifting Cap

10. DETAILED THREAD/CLOSURE EVALUATION

Due to the importance of the buttress closure threads in providing and maintaining the MCO seal loading, a detailed analysis of the threads and other closure hardware is performed. The detailed analysis approach, results, and conclusions follows below.

10.1 Analysis Discussion

The locking ring thread design involves buttress threads with a specified pitch of 0.25 in. and an engagement length of 2.770 in. The buttress thread design details are shown in Figure 6 and are in conformance with ANSI B1.9 [8]. As an initial check on the thread adequacy for the bolt loading, thread stripping (thread shear) calculations are performed on the locking ring threads. Since ANSI B1.9 does not specify a formula for external thread stripping area, a conservative approximation from Machinery's Handbook [9] is used. On page 1718 of [9], a stripping/shear area, per inch of engagement, for Acme threads is given as

$$A_s = 3.1416 \cdot D_1 \max[0.5 + n \tan 14.5^\circ (D_2 \min. - D_1 \max)]$$

where, D_1max is the maximum minor diameter of the internal thread and D_2min is the minimum pitch diameter of the external thread.

Conservatively using the minor diameter of the locking ring external threads, and conservatively ignoring the 2nd term inside the brackets, results in the following thread stripping area:

$$l_{engage} := 2.770\ in$$

$$D_{min} := 24.168 \cdot in$$

$$A_s = \pi \cdot D_{min} \cdot 0.5 \cdot l_{engage}$$

$$A_s := 105.158\ in^2$$

From Appendix 4 (Calculation KH-8009-8-02), the maximum bolt in-service loading is 200,000 lb, resulting in the following thread shear stress (allowable thread stress is $0.6S_m$ per ASME Section III, Subsection NB-3227.2 [10]):

$$P_{MAX} = 200{,}000 \text{ lb}$$

$$\tau_s := \frac{P_{ma}}{A_s}$$

$$\tau_s = 1902 \text{ psi}$$

$$S_{m132} := 22740 \frac{\text{lb}}{\text{in}^2}$$ Locking Ring - 304N @ 132°C

$$\text{Ratio} := \frac{\tau_s}{0.6 \cdot S_{m132}}$$

$$\text{Ratio} = 0.139$$

Thus, the thread stripping area is adequate for the maximum jacking bolt loading.

The detailed thread/closure model developed is shown in Figure 7. Contact elements are used at the threads, bolt interface, and seal stop interface. The model is subjected to the following load sequence: (1) The maximum room temperature preload of 200,000 lb (conservative upper bound from Appendix 4). The preload is iteratively obtained using an interference fit at the bolt/shield plug interface. (2) Bolt preload plus 150 psi at 132°C. Note that the model details focus on the thread region. Other areas are modeled in much less detail, e.g. the shield plug and the locking ring, away from the threads. Also, the thread relief was increased to 0.373 inches from 0.354 inches. Both the modeling approximations and the dimensional changes are judged to have a small effect on the results. The only boundary constraint is an axial displacement constraint at the bottom of the shell.

To account for nonlinear effects occurring during the load sequence, bilinear plasticity (BKIN) and large displacements (NLGEOM) are both enabled in the ANSYS analysis. Note, from Figure 7, that the full bolt width of 1.5 in. is modeled using axisymmetric ring elements. The full bolt width is used to bound the closure response in a cross section passing through a bolt. To provide the correct bolt stiffness, the elastic modulus of the bolt material is reduced by the ratio of the actual bolt area divided by the bolt ring area. The effective bolt length is assumed to project through the first few bolt threads (0.25 in.).

10.2 Analysis Results

The ANSYS input and output files for the thread/closure analysis are THRD16.inp and THRD16.out, respectively . A summary of the results for the load sequence discussed in Section 10.1 follows below.

The stress/strain state of the thread region following the three step load sequence is summarized in Figure 8 and Figure 9. Note, from Figure 9, that the peak equivalent plastic strain of 0.16% occurs in the thread relief region below the bottom thread. Plastic straining, of lesser magnitude, also occurs in the root of the two bottom threads. This concentration of plastic straining in the bottom threads is anticipated since the thread load progressively diminishes above the bottom thread. This condition is considered to be a peak stress and, as the vessel is not subject to repeated loading, a fatigue evaluation is not performed.

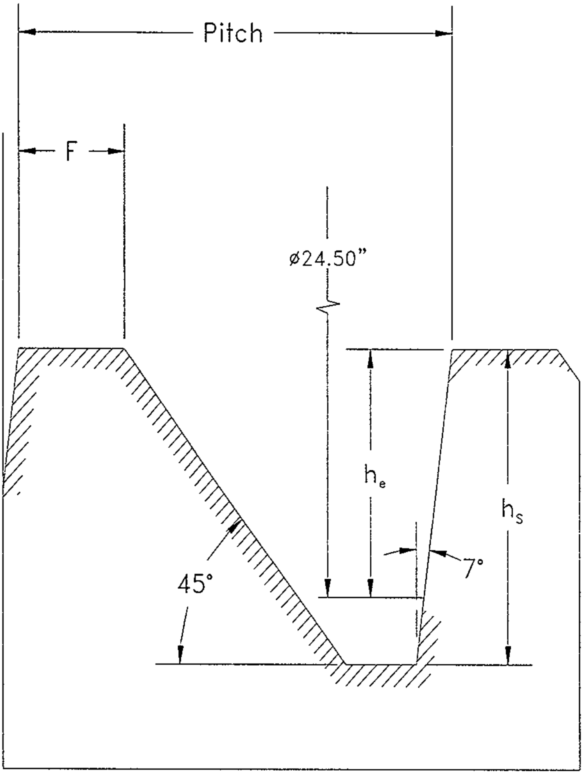

Pitch = 0.25 in.

h_e = 0.1410 in.

h_s = 0.1660 in.

F = 0.04080 in.

Figure 6: Thread Detail Geometry

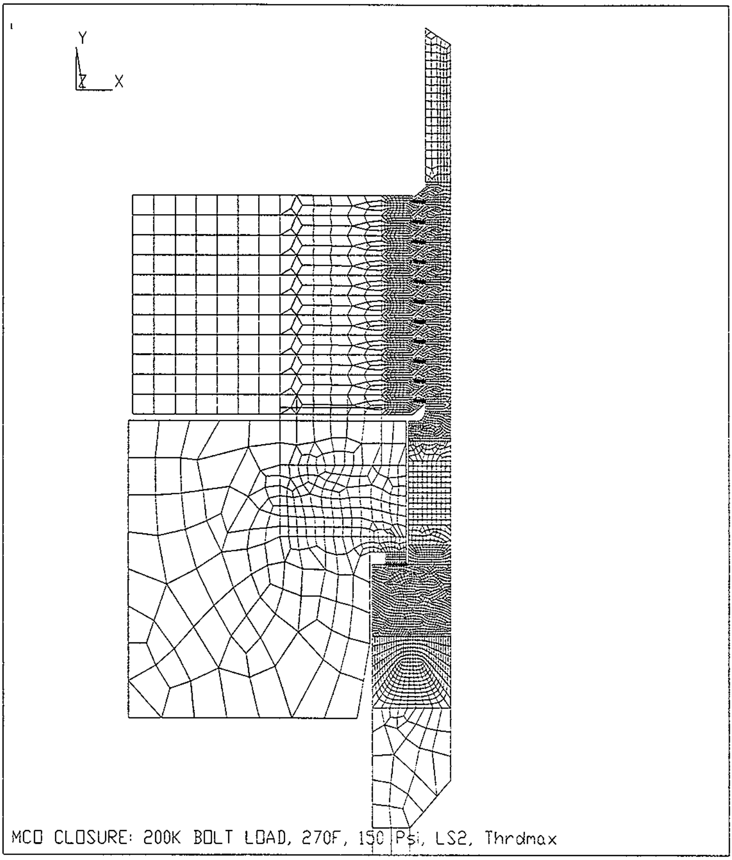

Figure 7: Finite Element Model of MCO Thread/Closure Region

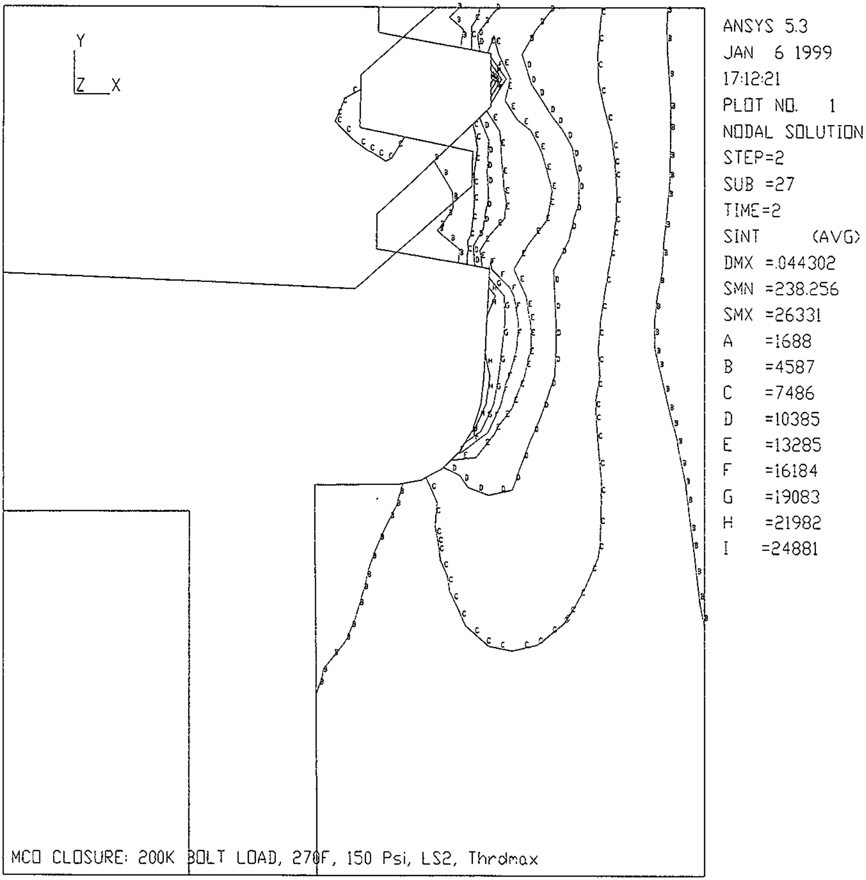

Figure 8: Stress Intensity Contours, Bottom Threads

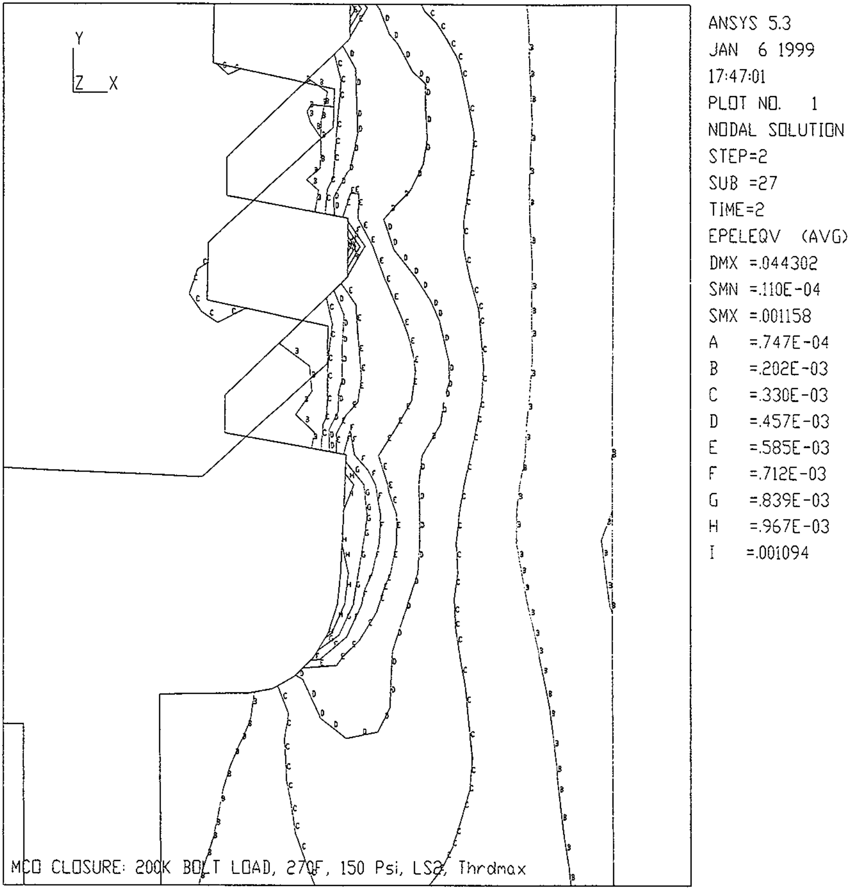

Figure 9: Equivalent Strain Contours, Bottom Threads

10.3 Collar Lifting Load Analysis

This section is the stress analysis of the worst case lifting condition for the MCO. It is assumed that the MCO is at its maximum temperature, the Jack bolt and Seal loads are still applied, the MCO is full of water so it is at its maximum weight, and the maximum internal pressure of 450 psi has leaked past the seal and is applied to the cap. It is required that the resulting membrane stress shall be less than S_m for the materials involved.

The lifting load path proceeds from the cap, down through the collar to the shell. The most highly stressed portion of the load path is at the thread relief in the collar, where the wall is a minimum of 0.373" thick. This is the area that is check herein.

The applied loads are:

MCO weight = 24,000 lb = W_M

Temperature = 270°F

Internal Pressure = 450 psi

Jack bolt load = 200,000 lb = W_B

The pressure load is applied over the internal diameter of the cap just above the collar threads.

P = 450 psi internal pressure

D_i = 24.25 inches Cap maximum internal diameter

$$W_P := P \frac{\pi}{4} D^2$$

$$= 450 \times 1/4\ \pi\ 24.25^2$$

$$= 207{,}839 \text{ lb}$$

The total axial load is:

$F_T = W_M + W_P + W_B$

$= 24,000 + 207,839 + 200,000$

$= 431,839$ lb.

The minimum cross sectional area of the thread relief is:

Di = inner diameter = 24.535 inches

D_m = mean diameter of thread relief = 2 x 12.463 = 24.93 inches

$A = \pi Dt = (3.1416)(24.93)(0.373)$

$A = 29.21$ in^2

The membrane stress:

$$\sigma_{axial,membrane} = \frac{F_t}{A} = \frac{431,839}{29.21} = 14,784 \text{ psi}$$

At 270°F, S_M is 31,940 psi 19,708 < 31,940

Thus the thread relief area of the collar meets the requirement that the membrane stress, 19,708 psi, is less than S_M, 31,940 psi.

Primary plus secondary stress is found by adding the secondary bending from Section 8.3.2 to the above primary stress:

$P_m + Q = 19,708 + 39,209$

$= 58,917$ psi

Allowable stress is $3S_M = 3(31,940) = 95,820$ psi

Therefore, the thread relief meets the requirements for primary plus secondary stress.

11. COVER CAP TEST PLUG AND COVER PLATE EVALUATION

The cover cap has a recessed threaded plug to be used fo Helium leak testing after welding. This plug is 1.75 inches in diameter and will permit the insertion of a tool to access the threaded plugs contained in ports #1 and #2 of the shield plug. After final leak testing, a 4.00-inch diameter cover plate is welded. The following evaluates the threaded plug and the cover plate for a pressure of 450 psig.

11.1 Test Plug (Item 8)

The test plug, Item 8, is SA-193,Grade B8S of B8SA material and is torqued to 100 lb.-ft., the same torque level as the process valves. Torque is limited to the requirements of Reference (4), Subsection NG-3232.2, the preload stress being limited to (1.2)0.9S_Y. For SA-193 material at 270° F, $S_Y = 3(S_M) = 3(11{,}600) = 34{,}800$ psi. The stress limit is therefore (1.2)(0.9)34,800 = 37,584 psi. The maximum allowed preload force is therefore

A_S (1 3/4-12 UN - 2A) = 2.19 in^2
$F = \sigma A_S = 82{,}309$ lb.

The preload force at a torque of 100 lb.-ft. is:

$F = 12T / Kd$

T = torque lb.-ft.
K = "nut factor" = 0.20
d = 1.75 in.

$F = 12(100) / 0.20(1.75) = 3{,}429$ lb.
using a 30% uncertainty factor the preload is
= 3,429(1.30) = 4,458 lb. << 82,309 lb.

The pressure load is $450 (\pi/4)(1.75)^2 = 1{,}082$ lb. and is less than the preload of 4,458 lb.

The stripping of the thread in the canister cover is checked for this loading:

$$\frac{A_{S,INTERNAL}}{L_E} = \pi\, n\, D_{SMIN}\left[\frac{1}{2n} + 0.57735\left(D_{SMIN} - E_{NMAX}\right)\right]$$ Reference(9.)

D_{SMIN} = minimum major diameter of external thread = 1.7368 in.
E_{NMAX} = maximum pitch diameter of internal thread = 1.7037 in
L_E = length of engagement = 9.0 - 2.13 - 5.46 = 1.41 in.

$$\frac{A_{S,INTERNAL}}{L_E} = \pi\,(12)\,(1.7368)\left[\frac{1}{2(12)} + 0.57735(1.7368 - 1.7037)\right]$$

$$= 3.979\ \text{in}^2/\text{in}$$

$$A_{S,INTERNAL} = 3.979\ (1.41)$$

$$= 5.61\ \text{in}^2$$

The allowable stress is 0.6 S_M = 0.6(16,700) = 10,020 psi
The stripping load is 5.61(10,020) = 56,212 lb. >> 4,458 lb. preload
Therefore stripping of the threads is not a concern.

11.2 Cover Plate (Item 9)

The cover plate is a 4-inch diameter flat plate 5/16 inch thick. The analysis is performed considering the cover plate as simply supported at the edge. The maximum stress intensity is considered a $P_L + P_B$ stress and is limited to 1.5 S_M.

$$\text{Maximum Bending Moment} = M_C = \frac{qa^2(3+\nu)}{16}$$

q = pressure load = 450 psi
a = plate radius = 2 in.
ν = Poisson's ratio = 0.27

$$\text{Maximum stress} = \sigma_R = \sigma_T = \frac{6M_C}{t^2}$$

$$\sigma_{MAX} = \frac{6(450)(2.0)^2(3.27)}{16(0.31)^2}$$

$$= 22{,}968 \text{ psi}$$

Stress Intensity = $\sigma_{MAX} - \sigma_{PRESS.}$

$$= 22{,}968 + 450 = 23{,}418 \text{ psi}$$

Allowable = 1.5 S_M = 1.5(16,700) = 25,050 psi

$$R = \frac{23{,}418}{25{,}050} = 0.93$$

$$\text{Weld Stress} = \frac{\text{Total Load on Weld}}{\text{Peripheral Area}}$$

$$= \frac{\frac{\pi}{4}(4.0)^2(450)}{\pi(4.0)(0.31)(.707)} = 2040 \text{ psi}$$

Allowable Stress = (0.9)0.6S_M = (0.9)0.6(16,700) = 9,018 psi

Note: 0.9 weld factor per Code Case N-595 Part 1.c

$$R = \frac{2040}{9{,}018} = 0.23$$

Therefore, the 5/16-inch plate is adequately sized for 450 psig.

Appendix A:

Computer Run Output Sheets & Input Files

COMPUTER RUN COVER SHEET

Project Number:	KH-8009-8
Computer Code:	ANSYS®-PC
Software Version:	5.4
Computer System:	Windows 95®, Pentium® Processor
Computer Run File Number:	KH-8009-8-04
Unique Computer Run Filename:	caplift.inp
Run Description:	Stress Analysis of Lifting Cap
Creation Date / Time:	16 December 1998 06:08:56 PM

DBarlow for Joe Nichols 2-12-99

Prepared By: Joe Nichols Date

FOR ZACHARY G. SARGENT 2/12/99

Checked By: Zachary G. Sargent Date

REVISION	0	1	2		PAGE 35 of 95
PREPARED BY / DATE	ZGS 4/17/97	ZGS 7/14/98	02/12/99		
CHECKED BY / DATE	JN 4/17/97	HSA 7/14/98	02/12/99		

LISTING OF CAPLIFT.INP

```
fini
/cle
/FILENAM,CAPLIFT
/PREP7
/TITLE, MCO Lifting
/COLOR,NUM,BLUE,1

TREF,70
TUNIF,270
ETAN=0.006                        ! Tangent modulus

/COM **** ELEMENT TYPES ****
ET,1,SOLID45                      ! Shell & Collar
ET,2,SOLID45             ! Lifting Cap



/COM ************* MATERIAL PROPERTIES *************
MP,DENS,1,490/1728                ! 304L SS
MP,NUXY,1,0.3


/COM **** DEFINING TEMPERATURES FOR MPDATA ****
MPTEMP,1, 70,100,200,300,400,500
MPTEMP,7,600,650,700,750

/COM **** DEFINING ELASTIC MODULI FOR 304L & SA-193 ****
MPDATA,EX,1,1,28.3e+06,28.1e+06,27.6e+06,27.0e+06,26.5e+06,25.8e+06
MPDATA,EX,1,7,25.3e+06,25.1e+06,24.8e+06,24.5e+06

/COM **** MEAN COEFFICIENTS OF THERMAL EXPANSION (in./in./(F) ****
! SA240 Gr 304L
MPDATA,ALPX,1,1,0,8.55e-06,8.79e-06,9.00e-06,9.19e-06,9.37e-06
MPDATA,ALPX,1,7,9.53e-06,9.61e-06,9.69e-06,9.76e-06


/COM ************* SHELL GEOMETRY ****************
IR=11.49                         ! Internal Shell Radius @ Bottom
OR=12.000                         ! Shell Outside Radius @ Bottom
IR2 = 12.02                       ! Inside Radius at Collar Sealing Surface
OR2 = 12.655                     ! Outside Radius at Collar Sealing Surface
IR3 = 12.284                    ! Inside Radius at Collar-Lifting Ring Weld
```

```
IR4=12.174          ! Inside Radius

/COM **** BOTTOM  PLATE   [DWG SK-2-300378] ****
N,1,,-1.32                           ! Row 1
N,2,1.25,-1.32
N,3,2.13,-1.32
N,10,11.423,-1.32
FILL

N,41,0.00,-0.19          ! Row 3
N,42,1.25,-0.19
N,43,2.13,0.69
N,50,IR,0.69
FILL,43,50
N,52,OR,0.69
FILL,50,52

FILL,1,41,1,21,1,10            ! Middle Row
FILL,10,50,1,30
N,32,12,-0.32
FILL,30,32
FILL,10,32,1,11
N,53,IR,1.17
N,55,OR,1.17                   ! Shell Stub/Weld
FILL,53,55
FILL,50,53,1,1101
FILL,51,54,1,1102
FILL,52,55,1,1103

/COM **** SHELL [DWGS SK-2-300379 & SK-2-300461] ****
N,65,IR,6.68
N,67,OR,6.68
FILL
FILL,53,65,3,,3,3,1
FILL,53,56,1,1104
FILL,55,58,1,1106
FILL,1104,1106
FILL,56,59,1,1107
FILL,58,61,1,1109
FILL,1107,1109
FILL,59,62,1,1110
FILL,61,64,1,1112
FILL,1110,1112
FILL,62,65,1,1113
```

```
FILL,64,67,1,1115
FILL,1113,1115

/COM **** SINGLE ROW SHELL ****
N,100,IR,7.18                     ! Inside
N,140,IR,71.68
N,180,IR,136.68
N,101,OR,7.18                     ! Outside
N,141,OR,71.68
N,181,OR,136.68
FILL,100,140,20,,2,2,1,2.0
FILL,140,180,19,,2,2,1,.5
FILL,100,102,2,1116,2
FILL,102,104,2,1120,2
FILL,104,106,2,1124,2
FILL,106,108,2,1128,2
FILL,108,110,2,1132,2
FILL,110,112,2,1136,2
FILL,112,114,2,1140,2
FILL,114,116,2,1144,2
NGEN,2,1,1116,1146,2,0.50

/COM **** DOUBLE ROW SHELL ****
N,190,IR,137.18                   ! Transition to Double Row
N,192,OR,137.18
FILL

/COM **** BASE OF CASK THROAT--ELEVATION: 138 INCHES ****
N,217,IR,142.68                     ! Transition to Double Row
N,219,OR,142.68
FILL
FILL,190,217,8,,3,3,1           ! Vertical Fill

/COM **** BOTTOM OF COLLAR TRANSITION ****
N,235,IR,146.06                     ! Start of Transition to Large O.D &
N,237,OR,146.06                     ! Assumed Location of Shield Plug
Taper
FILL
N,238,IR,146.68
N,240,OR,146.68
FILL                            ! Horizontal Fill
FILL,217,235,5,,3,3,1           ! Vertical Fill

/COM **** TOP OF COLLAR TRANSITION ****
```

```
N,241,IR,147.31                        ! End of Transition to Large O.D &
N,243,OR,147.31                        ! Assumed Location of Shield Plug Taper
FILL                                   ! Horizontal Fill
NGEN,2,3,241,243,1,,0.75

/COM **** COLLAR SEALING SURFACE ****
N,247,IR,149.63                        ! Inside Radius of Sealing Surface
N,249,IR2,149.63                       ! Outside Radius at Sealing Surface
FILL                                   ! Horizontal Fill

/COM **** THICK WALL AT COLLAR TRANSITION ****
NGEN,2,10,240,249,3                    ! Nodes 250-259 Coincident w/240-249 (by
3)
N,255,OR2,147.31                       ! Outside Surface
N,261,OR2,149.63                       ! Outside Surface
N,258,OR2,148.06
N,980,IR,149.38
N,981,11.755,149.38
N,982,IR2,149.38
N,983,12.317,149.38
N,984,OR2,149.38
N,990,OR2,146.68
FILL,240,990,1,251
NGEN,2,5,980,984,1,,-0.66
FILL,246,258,1,257
FILL,253,255,1,,1,3,3
FILL,237,990,1,991

/COM **** COLLAR AT BOTTOM EDGE OF PLUG (.155" above Sealing Surface)
****
NGEN,2,3,259,,,,0.175                   ! Nodes 262

/COM **** COLLAR AT TOP EDGE OF PLUG (1.44" above bottom Edge) ****
NGEN,2,9,262,,,,1.655                  ! Nodes 271
FILL,262,271,2
NGEN,3,1,259,271,1,(OR2-IR2)/2

/COM **** COLLAR AT BASE OF THREADS ****
N,274,IR4,151.58
N,1000,IR2,151.58

/COM **** TOP TO COLLAR (WELD CLOSURE) ****
N,277,IR4,152.26
N,280,IR4,152.95
```

```
N,283,IR4,153.63
N,286,IR4,154.32
N,289,IR4,154.725
N,290,12.47,154.725
N,291,OR2,154.725
N,292,IR3,155.30
N,295,IR3,155.875
N,300,IR3,154.725
N,302,IR3,155.745
N,304,OR2,155.745
FILL,302,304
NGEN,2,1,274,289,3,0.27
NGEN,2,1,275,290,3,0.211
NGEN,3,1,292,295,1,(OR2-IR3)/2

/COM                CHANGING TO LOCAL COORDINATE SYSTEM
LOCAL,30,1,,,,,90          ! Cylindrical Coordinate for Nodal Sweep Pattern


/COM ************* NODAL GENERATION 60 DEGREE SWEEP *************
NGEN,19,3000,1,1700,1,,-10                     ! 5 Degree Increments

NDELE,3041,108041,3000    ! Deleting Extra Nodes at Bottom Plate Axis
NDELE,3021,108021,3000
NDELE,3001,108001,3000
NDELE,4300,109300,3000
NDELE,4299,109299,3000              ! Deleting  Nodes at Lifting Cap Axis




/COM ************* ELEMENT GENERATION *************
/COM ************* SHELL *************

TYPE,1                ! SOLID45 - 8 Node Brick
E,2,3002,1,1,22,3022,21,21          ! Bottom Plate
*repeat,18,3000,3000,,,3000,3000,,

E,22,3022,21,21,42,3042,41,41
*repeat,18,3000,3000,,,3000,3000,,

E,23,42,22,22,3023,3042,3022,3022
E,3,23,22,22,3003,3023,3022,3022
```

```
E,2,3,22,22,3002,3003,3022,3022
EGEN,18,3000,-3
E,3,4,3004,3003,23,24,3024,3023
EGEN,7,1,-1
EGEN,18,3000,-7
E,23,43,42,42,3023,3043,3042,3042
EGEN,18,3000,-1
E,23,24,3024,3023,43,44,3044,3043
EGEN,9,1,-1
EGEN,18,3000,-9
E,10,11,3011,3010,30,31,3031,3030
EGEN,18,3000,-1
E,32,11,31,31,3032,3011,3031,3031
EGEN,18,3000,-1
E,50,51,3051,3050,1101,1102,4102,4101        ! Bottom Shell
EGEN,5,3,-1
EGEN,18,3000,-5
E,1101,1102,4102,4101,53,54,3054,3053
EGEN,5,3,-1
EGEN,18,3000,-5
E,51,52,3052,3051,1102,1103,4103,4102
EGEN,5,3,-1
EGEN,18,3000,-5
E,1102,1103,4103,4102,54,55,3055,3054
EGEN,5,3,-1
EGEN,18,3000,-5
E,100,65,66,66,3100,3065,3066,3066
EGEN,18,3000,-1
E,67,101,66,66,3067,3101,3066,3066
EGEN,18,3000,-1
E,100,101,66,66,3100,3101,3066,3066
EGEN,18,3000,-1
E,100,101,3101,3100,1116,1117,4117,4116
EGEN,18,3000,-1
E,1116,1117,4117,4116,1118,1119,4119,4118
EGEN,8,4,-1
EGEN,18,3000,-8
E,1118,1119,4119,4118,102,103,3103,3102
*repe,8,4,4,4,4,2,2,2,2
EGEN,18,3000,-8
e,102,103,3103,3102,1120,1121,4121,4120
*repe,7,2,2,2,2,4,4,4,4
EGEN,18,3000,-7
E,116,117,3117,3116,118,119,3119,3118
```

```
EGEN,32,2,-1
EGEN,18,3000,-32
E,180,190,191,191,3180,3190,3191,3191
EGEN,18,3000,-1
E,180,181,191,191,3180,3181,3191,3191
EGEN,18,3000,-1
E,181,192,191,191,3181,3192,3191,3191
EGEN,18,3000,-1
E,190,191,3191,3190,193,194,3194,3193
EGEN,18,3,-1
EGEN,18,3000,-18
E,191,192,3192,3191,194,195,3195,3194
EGEN,18,3,-1
EGEN,18,3000,-18
E,244,245,3245,3244,985,986,3986,3985
EGEN,2,1,-1
EGEN,18,3000,-2
E,985,986,3986,3985,980,981,3981,3980
EGEN,2,1,-1
EGEN,18,3000,-2
E,980,981,3981,3980,247,248,3248,3247        ! Sealing Surface
EGEN,2,1,-1
EGEN,18,3000,-2
E,251,991,990,990,3251,3991,3990,3990        ! Transition at Collar
EGEN,18,3000,-1
E,237,991,3991,3237,250,251,3251,3250
EGEN,18,3000,-1
E,250,251,3251,3250,253,254,3254,3253
EGEN,2,3,-1
EGEN,18,3000,-2
E,251,990,3990,3251,254,255,3255,3254
EGEN,18,3000,-1
E,254,255,3255,3254,257,258,3258,3257
EGEN,18,3000,-1
E,256,257,3257,3256,987,988,3988,3987
EGEN,18,3000,-1
E,257,258,3258,3257,988,989,3989,3988
EGEN,18,3000,-1
E,988,989,3989,3988,983,984,3984,3983
EGEN,18,3000,-1
E,987,988,3988,3987,982,983,3983,3982
EGEN,18,3000,-1
E,982,983,3983,3982,259,260,3260,3259
EGEN,18,3000,-1
```

```
E,983,984,3984,3983,260,261,3261,3260
EGEN,18,3000,-1
E,259,260,3260,3259,262,263,3263,3262
EGEN,9,3,-1
EGEN,18,3000,-9
E,1000,274,271,271,4000,3274,3271,3271
EGEN,18,3000,-1
E,260,261,3261,3260,263,264,3264,3263
EGEN,11,3,-1
EGEN,18,3000,-11
E,286,287,3287,3286,300,290,3290,3300
EGEN,18,3000,-1
E,300,290,3290,3300,292,293,3293,3292
EGEN,18,3000,-1
E,300,289,286,286,3300,3289,3286,3286
EGEN,18,3000,-1
E,292,293,3293,3292,302,303,3303,3302
E,293,294,3294,3293,303,304,3304,3303
!E,302,303,3303,3302,295,296,3296,3295
!E,303,304,3304,3303,296,297,3297,3296
EGEN,18,3000,-2

/COM **** LIFTING CAP GEOMETRY ****
CAP1=9.375            ! Outside Radius Inside Lip
CAP2=10.19            ! Outside Radius at Lip
CAP3=9.625            ! Outside Radius at Chamfer Below Lip (Transition)
CAP4=12.655           ! Outside Radius at Shell
LOCAL,25,0,,164.745      ! Local System Top Left Corner of Cap (CL Cap)

! Start Center Port
N,1301,0,-3.545
N,1305,0,-2.25
fill
N,1307,0,-1.56
fill,1305,1307
n,1311,0,0
fill,1307,1311

ngen,5,11,1301,1309,,2.765/4
ngen,5,11,1310,,,2.765/4,.12/4
ngen,5,11,1311,,,2.765/4
ngen,3,11,1345,1349,,1.073/2
!nsel,s,node,,1334,1344
!nmodif,all,2.505
```

```
!alls
LOCAL,25,1,4.515,164.745,,,90 ! Local System Top Left Corner Cap (CL Cap)
ngen,9,11,1345,1367,,,180/8

csys,0

ngen,5,11,1433,,,2.631/4
ngen,5,11,1434,,,(2.631+.18255)/4,-.12/4
ngen,5,11,1435,,,(2.631+2*.18255)/4,.03/2
ngen,5,11,1436,,,(2.631+3*.18255)/4,.06/2
ngen,5,11,1437,,,3.360/4,.12/4
ngen,5,11,1438,,,(3.360-.125)/4,.06/4
ngen,5,11,1439,,,(3.110)/4
ngen,5,11,1440,,,(3.110)/4 ,-.22/8
ngen,5,11,1441,,,(3.110)/4,-.22/4
ngen,5,11,1442,,,(3.110)/4,-.22/8
ngen,5,11,1443,,,(3.110)/4
ngen,4,11,1485,1487,,(0.815)/3
local,41,1,8.896,164.75-6.325
ngen,8,11,1477,,,,-71.109/7

csys,0
dsys,0
ngen,4,11,1554,,,.558/3,-1.632/3

ngen,5,11,1481,,,(3.03)/4
ngen,7,11,1525,,,,-(4.927)/6

n1=1488
n2=1492
*do,i,1,10,1
  fill,n1,n2
  n1=n1+11
  n2=n2+11
*enddo



ngen,2,11,1587,,,0.04,-.243
ngen,2,11,1591,,,0.00,-.243
fill,1598,1602
ngen,4,11,1598,1602,,0.00,-1.343/3
ngen,2,11,1631,1635,,0.00,-.358
```

```
*get,nx1,node,295,loc,x
*get,nx2,node,1642,loc,x
nmodif,1643,(nx1-nx2)/2+nx2
nmodif,1644,nx1
*get,nx1,node,296,loc,x
nmodif,1645,nx1


/COM             CHANGING TO LOCAL COORDINATE SYSTEM
LOCAL,30,1,,,,,-90       ! Cylindrical Coordinate for Nodal Sweep Pattern
cscir,30,1
/COM ************* NODAL GENERATION 60 DEGREE SWEEP *************


ngen,2,18*3000,1301,1646,,,180
nsel,s,node,,55356,55432
nmod,all,,180

alls
csys,0

nnum=55466
*do,i,1,11,1
  *get,nx,node,nnum,loc,x
  nmod,nnum,nx-.2
  nnum=nnum+1
*enddo

fill,55301,55466,14,,11,11,1,.7

alls

/pnum,node,0
csys,30
alls
fill,1301,55301,17,,3000,11,1,1
fill,1312,55312,17,,3000,11,1,1
fill,1323,55323,17,,3000,11,1,1
fill,1334,55334,17,,3000,11,1,1
fill,1345,55345,17,,3000,11,1,1
fill,1356,55356,17,,3000,11,1,1
fill,1367,55367,17,,3000,11,1,1
fill,1378,55378,17,,3000,11,1,1
fill,1389,55389,17,,3000,11,1,1
```

```
fill,1399,55399,17,,3000,11,1,1
fill,1400,55400,17,,3000,11,1,1
fill,1411,55411,17,,3000,11,1,1
fill,1422,55422,17,,3000,11,1,1
fill,1433,55433,17,,3000,11,1,1
fill,1444,55444,17,,3000,11,1,1
fill,1455,55455,17,,3000,11,1,1
fill,1466,55466,17,,3000,11,1,1
fill,1477,55477,17,,3000,11,1,1
fill,1496,55496,17,,3000,3,1,1
fill,1507,55507,17,,3000,3,1,1
fill,1518,55518,17,,3000,3,1,1
fill,1488,55488,17,,3000,5,1,1
fill,1499,55499,17,,3000,5,1,1
fill,1510,55510,17,,3000,5,1,1
fill,1521,55521,17,,3000,5,1,1
fill,1532,55532,17,,3000,5,1,1
fill,1543,55543,17,,3000,5,1,1
fill,1554,55554,17,,3000,5,1,1
fill,1565,55565,17,,3000,5,1,1
fill,1576,55576,17,,3000,5,1,1
fill,1587,55587,17,,3000,5,1,1
fill,1598,55598,17,,3000,5,1,1
fill,1609,55609,17,,3000,5,1,1
fill,1620,55620,17,,3000,5,1,1
fill,1631,55631,17,,3000,5,1,1
fill,1642,55642,17,,3000,5,1,1


csys,0
nsel,s,node,,4345,4355
nnum=4345
*do,i,1,11,1
  *get,nx,node,nnum,loc,x
  nmod,nnum,nx-.2
  nnum=nnum+1
*enddo
alls
csys,30
fill,4345,55345,16,,3000,11,1,1

csys,0
nsel,s,node,,4422,4432
nnum=4422
```

```
*do,i,1,11,1
  *get,nx,node,nnum,loc,x
  *get,nz,node,nnum,loc,z
  nmod,nnum,nx+.15,,nz+.1
  nnum=nnum+1
*enddo
alls
csys,30
fill,4422,55422,16,,3000,11,1,1

csys,0
nsel,s,node,,4433,4443
nnum=4433
*do,i,1,11,1
  *get,nx,node,nnum,loc,x
  *get,nz,node,nnum,loc,z
  nmod,nnum,nx+.25,,nz-.2
  nnum=nnum+1
*enddo
alls
csys,30
fill,4433,55433,16,,3000,11,1,.9


nsel,s,loc,y,20
nsel,r,loc,x,9.370,10.2
nsel,r,loc,z,163.7,164.8
nmod,all,,24.479
nsel,s,loc,y,40
nsel,r,loc,x,9.370,10.2
nsel,r,loc,z,163.7,164.8
nmod,all,,35.521
nsel,s,loc,y,20+60
nsel,r,loc,x,9.370,10.2
nsel,r,loc,z,163.7,164.8
nmod,all,,24.479+60
nsel,s,loc,y,40+60
nsel,r,loc,x,9.370,10.2
nsel,r,loc,z,163.7,164.8
nmod,all,,35.521+60
nsel,s,loc,y,20+2*60
nsel,r,loc,x,9.370,10.2
nsel,r,loc,z,163.7,164.8
nmod,all,,24.479+2*60
```

```
nsel,s,loc,y,40+2*60
nsel,r,loc,x,9.370,10.2
nsel,r,loc,z,163.7,164.8
nmod,all,,35.521+2*60


nsel,s,node,,7474,7476
nmod,all,,20+4.479/2
nsel,s,node,,13474,13476
nmod,all,,40-5.521/2
nsel,s,node,,25474,25476
nmod,all,,20+4.479/2+60
nsel,s,node,,31474,31476
nmod,all,,40-5.521/2+60
nsel,s,node,,43474,43476
nmod,all,,20+4.479/2+2*60
nsel,s,node,,49474,49476
nmod,all,,40-5.521/2+2*60

nsel,s,node,,7484
nmod,all,,20+4.479/2
nsel,s,node,,13484
nmod,all,,40-5.521/2
nsel,s,node,,25484
nmod,all,,20+4.479/2+60
nsel,s,node,,31484
nmod,all,,40-5.521/2+60
nsel,s,node,,43484
nmod,all,,20+4.479/2+2*60
nsel,s,node,,49484
nmod,all,,40-5.521/2+2*60


alls

type,2
!e,i,j,k,l,m,n,o,p
alls
esel,u,type,,1
e,1323,4323,4312,1312,1324,4324,4313,1313
egen,10,1,all
egen,15,11,all
egen,4,11,3497,3498
egen,16,11,3489,3492
```

```
egen,18,3000,all

e,1312,4312,1301,1301,1313,4313,1302,1302
*repeat,18,3000,3000,,,3000,3000,,
egen,10,1,-18


csys,0
!Generate the element in the cap that were forgotten
nsel,s,node,,1345,1349
ngen,2,1300,all,,,1.072/2
nsel,s,node,,2645,2649
ngen,2,9,all,,,1.072/2


LOCAL,25,1,4.515,164.745,,,90  !Local System Top Left Corner Cap (CL Cap)
nsel,s,node,,2645,2658
ngen,9,15,all,,,,180/8

type,2

e,1345,2645,2646,1346,1356,2660,2661,1357
*repeat,8,11,15,15,11,11,15,15,11
egen,4,1,-8

e,2645,2654,2655,2646,2660,2669,2670,2661
*repeat,8,15,15,15,15,15,15,15,15
egen,4,1,-8


csys,0
nsel,s,loc,z,0
nplo

alls
numm,node
nsle
nsel,inve
!ndele,all


alls
nsle
nsel,inve
```

```
NDEL,ALL
esel,s,type,,1,2
nsle
numm,node,.002
alls
CSYS,0
NSEL,S,LOC,Z,0
D,ALL,Uz
NSEL,S,LOC,Y,-1.322,-1.319
D,ALL,Uy
ALLS
d,1,ux,0
alls

nsel,s,node,,7485,7518,11
nsel,a,node,,10485,10518,11
nsel,a,node,,13485,13518,11
nsel,a,node,,25485,25518,11
nsel,a,node,,28485,28518,11
nsel,a,node,,31485,31518,11
nsel,a,node,,43485,43518,11
nsel,a,node,,46485,46518,11
nsel,a,node,,49485,49518,11
sf,all,pres,3100*3
alls
lswrite,1


prs=450
csys,30
esel,s,type,,1
nsle
nsel,r,loc,x,0,11.49
nsel,r,loc,z,.69,149.63
sf,all,pres,prs
nsle
nsel,r,loc,x,0,12.02
nsel,r,loc,z,149.63,151.58
sf,all,pres,prs
nsle
nsel,r,loc,x,0,12.174
nsel,r,loc,z,151.58,154.72
sf,all,pres,prs
nsle
```

```
nsel,r,loc,x,0,12.284
nsel,r,loc,z,154.72,155.75
sf,all,pres,prs

alls
nsel,s,node,,1301,1642,11
*do,j,1,18,1
  nsel,a,node,,1312+3000*j,1642+3000*j,11
*enddo
*do,j,1,5,1
  nsel,a,node,,2653+j,2773+j,15
*enddo
sf,all,pres,prs

nsel,s,node,,2673,2763,15
prsf=prs*1.75*1.75*3.14159/4/9
f,all,fY,prsf

nsel,s,node,,2658
nsel,a,node,,2778
prsf=prs*1.75*1.75*3.14159/4/18
f,all,fY,prsf
alls
lswrite,2

/SOLU
save
lssolve,1,2

/post1
set,1
LPATH,7485,7487
PRSECT
LPATH,7486,7488
PRSECT
LPATH,10485,10487
PRSECT
LPATH,10486,10488
PRSECT
LPATH,13485,13487
PRSECT
LPATH,13486,13488
PRSECT
LPATH,25485,25487
```

```
PRSECT
LPATH,25486,25488
PRSECT
LPATH,28485,28487
PRSECT
LPATH,28486,28488
PRSECT
LPATH,31485,31487
PRSECT
LPATH,31486,31488
PRSECT
LPATH,43485,43487
PRSECT
LPATH,43486,43488
PRSECT
LPATH,46485,46487
PRSECT
LPATH,46486,46488
PRSECT
LPATH,49485,49487
PRSECT
LPATH,49486,49148
PRSECT
LPATH,7587,7591
PRSECT
LPATH,10587,10591
PRSECT
LPATH,13587,13591
PRSECT
LPATH,25587,25591
PRSECT
LPATH,28587,28591
PRSECT
LPATH,31587,31591
PRSECT
LPATH,43587,43591
PRSECT
LPATH,46587,46591
PRSECT
LPATH,49587,49591
PRSECT
LPATH,6274,6276
PRSECT
LPATH,9274,9276
```

```
PRSECT
LPATH,12274,12276
PRSECT
LPATH,24274,24276
PRSECT
LPATH,27274,27276
PRSECT
LPATH,30274,30276
PRSECT
LPATH,42274,42276
PRSECT
LPATH,45274,45276
PRSECT
LPATH,48274,48276
PRSECT
LPATH,6302,6304
PRSECT
LPATH,9302,9304
PRSECT
LPATH,12302,12304
PRSECT
LPATH,24302,24304
PRSECT
LPATH,27302,27304
PRSECT
LPATH,30302,30304
PRSECT
LPATH,42302,42304
PRSECT
LPATH,45302,45304
PRSECT
LPATH,48302,48304
PRSECT

set,2
LPATH,7485,7487
PRSECT
LPATH,7486,7488
PRSECT
LPATH,10485,10487
PRSECT
LPATH,10486,10488
PRSECT
LPATH,13485,13487
```

```
PRSECT
LPATH,13486,13488
PRSECT
LPATH,25485,25487
PRSECT
LPATH,25486,25488
PRSECT
LPATH,28485,28487
PRSECT
LPATH,28486,28488
PRSECT
LPATH,31485,31487
PRSECT
LPATH,31486,31488
PRSECT
LPATH,43485,43487
PRSECT
LPATH,43486,43488
PRSECT
LPATH,46485,46487
PRSECT
LPATH,46486,46488
PRSECT
LPATH,49485,49487
PRSECT
LPATH,49486,491488
PRSECT
LPATH,7587,7591
PRSECT
LPATH,10587,10591
PRSECT
LPATH,13587,13591
PRSECT
LPATH,25587,25591
PRSECT
LPATH,28587,28591
PRSECT
LPATH,31587,31591
PRSECT
LPATH,43587,43591
PRSECT
LPATH,46587,46591
PRSECT
LPATH,49587,49591
```

```
PRSECT
LPATH,6274,6276
PRSECT
LPATH,9274,9276
PRSECT
LPATH,12274,12276
PRSECT
LPATH,24274,24276
PRSECT
LPATH,27274,27276
PRSECT
LPATH,30274,30276
PRSECT
LPATH,42274,42276
PRSECT
LPATH,45274,45276
PRSECT
LPATH,48274,48276
PRSECT
LPATH,6302,6304
PRSECT
LPATH,9302,9304
PRSECT
LPATH,12302,12304
PRSECT
LPATH,24302,24304
PRSECT
LPATH,27302,27304
PRSECT
LPATH,30302,30304
PRSECT
LPATH,42302,42304
PRSECT
LPATH,45302,45304
PRSECT
LPATH,48302,48304
PRSECT
```

COMPUTER RUN COVER SHEET

Project Number:	KH-8009-8
Computer Code:	ANSYS®-PC
Software Version:	5.4
Computer System:	Windows 95®, Pentium® Processor
Computer Run File Number:	KH-8009-8-04
Unique Computer Run Filename:	Caplift.out
Run Description:	Stress Analysis of Lifting Cap
Run Date / Time:	16 December 1998 06:35:10 PM

D Barlow for Joe Nichols 2-12-99

Prepared By: Joe Nichols Date

FOR ZACHARY G. SARGENT 2/12/99

Checked By: Zachary G. Sargent Date

COMPUTER RUN COVER SHEET

Project Number:	KH-8009-8
Computer Code:	ANSYS® 5.3
Software Version:	5.3
Computer System:	Windows 95®, Pentium® Processor
Computer Run File Number:	KH-8009-8-04
Unique Computer Run Filename:	THRDMIN.inp
Run Description:	Stress Analysis of the MCO Thread/Closure
Creation Date / Time:	7 December 1998 11:40.46 AM

D Barlow for Z. Sargent 2-12-99

Prepared By: Zachary G. Sargent Date

FOR JOE NICHOLS 2/12/99

Checked By: Joe Nichols Date

LISTING OF THRDMIN.INP FILE

```
/BATCH,LIST
/TITLE,MCO CLOSURE THREADS, PRELOAD ONLY, NO FRICTION, W/ SEAL
/COM ****REF. H-2-828042, R1, MINIMUM MATERIAL BASED ON TOLERANCES ,12-98
/COM 0.373 INCH THREAD RELIEF

/FILNAME,THRDMIN
/PREP7

/TRIAD,LTOP

*AFUN,DEG
/COM **** SHELL COLLAR (INTERNAL THREADS) ****
ET,2,PLANE42,,,1   ! Axisymmetric quads

/COM **** JACKING BOLTS ****
ET,3,PLANE42,,,1   ! Axisymmetric quads

/COM **** LIFTING AND LOCKING RING (EXTERNAL THREADS) ****
ET,4,PLANE42,,,1   ! Axisymmetric quads

/COM **** SHIELD PLUG AND SEAL ****
ET,6,PLANE42,,,1   ! Axisymmetric quads

ET,7,CONTAC48     ! Contact surface (gap) elements at threads
KEYOPT,7,7,1
R,7,1.0E+06

ET,8,CONTAC12            ! Contact elements under jacking bolts
KEYOPT,8,7,1
R,8,0,1.0E+05,.1849,1.0   ! Initial interference for preload 124,100 lb

/COM **** VARIABLES ****
HS=.1657              ! Thread height
HE=.1406                 ! Height of thread engagement
F=.0408                  ! Crest width
Dpitch=24.5
Rpitch=Dpitch/2
Pitch=.25            ! Pitch

/COM **** SHELL DIMENSIONS ****
RSin =24.04/2          ! Collar inside radius (below threads)
RSout=25.28/2          ! Collar outside radius
```

```
IRshell1=11.4925          ! Shell inside radius (lower section)
ORshell1=12.04            ! Shell outside radius (lower section)

REmin=Rpitch-HS         ! External thread (locking & lifting ring)
REmax=Rpitch

RImin=Rpitch-HE         ! Internal thread (shell collar)
RImax=Rpitch-HE+HS

RSavg=(RImax+RSout)/2  ! Average radius at threads

Rrelief=24.535/2

BoltCirc=21.75      ! Bolt circle diameter
BoltSize=1.500      ! Bolt nominal diameter

BoltIR=(BoltCirc-BoltSize)/2      ! Diameter at inside edge jacking bolts
BoltOR=(BoltCirc+BoltSize)/2     ! Diameter at outside edge jacking bolts
BoltA=3.1415926*((BoltOR*BoltOR)-(BoltIR*BoltIR))

/COM **** SCALE FACTOR FOR BOLT E AND Sy (AXISYMMETRIC) ****
RealArea=18*1.41    ! Tensile area of jacking bolts
SF=RealArea/BoltA   ! SF = Actual bolt area/modeled bolt area

ELSIZE=.7*0.05          ! Element size for thread mesh  (.0350)

/COM **** THREAD DIMENSIONS ****
Y2=0
Y3=(HS-HE)*TAN(7)
Y4=(HS*TAN(7))
Y5=(HS*TAN(7))+F
Y6=pitch-Y5

/COM **** MATERIAL PROPERTIES ****

/COM **** MATERIAL 1: SA-182 F304L
MP,NUXY,1,.3                   ! Poisson's constant with temperature
MP,DENS,1,493/1728  ! Weight density(493lb/ft^3), assumed constant w/temp

/COM **** NONLINEAR PROPERITES FOR MATERIAL 1 ****
ETAN=.006                      ! Use 5% tangent modulus
TB,BKIN,1,4              ! Yield stress and tangent moduli v. temperature
TBTEMP,70
```

```
TBDATA,1,25000,ETAN*28.3E+06
TBTEMP,200
TBDATA,1,21300,ETAN*27.6E+06
TBTEMP,270
TBDATA,1,19760,ETAN*27.18E+06
TBTEMP,300
TBDATA,1,19100,ETAN*27.0E+06

MPTEMP,1,70,200,270,300

/COM **** ELASTIC MODULI FOR MATERIAL 1 ****
MPDATA,EX,1,1,28.3E+06,27.6E+06,27.18E+06,27.0E+06

/COM **** MEAN COEFFICIENT OF THERMAL EXPANSION FOR MATERIAL 1 ****
MPTEMP,1,70,250,270,300
MPDATA,ALPX,1,1,8.46E-06,8.9E-06,8.94E-06,9.00E-06

/COM **** MATERIAL 2: SA-193 B8S, B8SA ****
MP,NUXY,2,.3                   ! Poisson's constant with temperature
MP,DENS,2,493/1728 ! Weight density(493 lb/ft^3),assumed constant w/temp.

/COM **** NONLINEAR PROPERTIES FOR MATERIAL 2 ****
TB,BKIN,2,4              ! Yield stress and tangent moduli v. temperature
TBTEMP,70
TBDATA,1,SF*50000,ETAN*28.3E+06
TBTEMP,200
TBDATA,1,SF*50000,ETAN*27.6E+06
TBTEMP,270
TBDATA,1,SF*50000,ETAN*27.18E+06
TBTEMP,300
TBDATA,1,SF*50000,ETAN*27.0E+06

MPTEMP,1,70,200,270,300

/COM **** ELASTIC MODULI FOR MATERIAL 2 ****
MPDATA,EX,2,1,SF*28.3E+06,SF*27.6E+06,SF*27.18E+06,SF*27.0E+06

/COM **** MEAN COEFFICIENTS OF THERMAL EXPANSION FOR MATERIAL 2 ****
MPTEMP,1,70,250,270,300
MPDATA,ALPX,2,1,8.46E-06,8.90E-06,8.94E-06,9.00E-06

/COM **** MATERIAL 3: SA-182 F304N ****
MP,NUXY,3,.3                   ! Poisson's constant with temperature
MP,DENS,3,493/1728 ! Weight density (4931b/ft^3),assumed constant w/temp.
```

```
/COM **** NONLINEAR PROPERTIES FOR MATERIAL 3 ****
ETAN=.006                  ! Use 5% tangent modulus
TB,BKIN,3,4               ! Yield stress and tangent moduli v. temperature
TBTEMP,70
TBDATA,1,35000,ETAN*28.3E+06
TBTEMP,200
TBDATA,1,28700,ETAN*27.6E+06
TBTEMP,270
TBDATA,1,26110,ETAN*27.18E+06
TBTEMP,300
TBDATA,1,25000,ETAN*27.0E+06

MPTEMP,1,70,200,270,300

/COM **** ELASTIC MODULI FOR MATERIAL 3 ****
MPDATA,EX,3,1,28.3E+06,27.6E+06,27.18E+06,27.0E+06

/COM **** MEAN COEFFICIENTS OF THERMAL EXPANSION FOR MATERIAL 3 ****
MPTEMP,1,70,250,270,300
MPDATA,ALPX,3,1,8.46E-06,8.9E-06,8.94E-06,9.00E-06

/COM **** MATERIAL 4: SA-182 F304 ****
MP,NUXY,4,.3                       ! Poisson's constant with temperature
MP,DENS,4,493/1728 ! Weight density (493lb/ft^3),assumed constant w/temp.

/COM **** NONLINEAR PROPERTIES FOR MATERIAL 4   ****
ETAN=.006              ! USE 5% TANGENT MODULUS
TB,BKIN,4,4            ! YIELD STRESS AND TANGENT MODULI V. TEMPERATURE
TBTEMP,70
TBDATA,1,30000,ETAN*28.3E+06
TBTEMP,200
TBDATA,1,25000,ETAN*27.6E+06
TBTEMP,270
TBDATA,1,23250,ETAN*27.18E+06
TBTEMP,300
TBDATA,1,22500,ETAN*27.0E+06

/COM **** ELASTIC MODULI FOR MATERIAL 4   ****
MPTEMP,1,70,200,270,300
MPDATA,EX,4,1,28.3E+06,27.6E+06,27.18E+06,27.0E+06

/COM **** MEAN COEFFICIENTS OF THERMAL EXPANSION FOR MATERIAL 4 ****
MPTEMP,1,70,250,270,300
```

```
MPDATA,ALPX,4,1,8.24E-06,8.57E-06,8.602E-06,8.65E-06

/COM **** LIST MATERIAL PROPERTIES ****
MPLIST
TBLIST

/COM **** SHELL COLLAR (INTERNAL THREAD) ****
K,10,IRshell1,-10.875
K,11,ORshell1,-10.875
K,12,IRshell1,-5.125
K,13,ORshell1,-5.125          ! Bottom of transistion - outer shell

K,14,RSout,-4.525
K,15,IRshell1,-3.62           ! Top of transistion - outer shell
K,16,RSout,-3.62

K,17,IRshell1,-2.715
K,18,RSout,-2.715

K,19,IRshell1,-1.81           ! Sealing surface
K,20,23.375/2,-1.81           ! Sealing surface
K,21,RSin,-1.81          ! Sealing surface
K,22,RSout,-1.81              ! Sealing surface

K,31,RSin,-1.56
K,32,RSout,-1.56

K,33,RSin,-1.31
K,34,RSout,-1.31

K,35,RSin,-0.5
K,36,RSout,-0.5

K,37,RSin,-0.25
K,38,RSout,-0.25

K,39,RSin,0                        ! Bottom of thread relief
K,40,Rrelief-0.125,0          ! Bottom of thread relief - tangent point
K,41,RSavg,0.125          ! Centerpoint of thread relief at vert. tangent
K,42,RSout,0.125           ! Outside of thread relief at vertical tangent

K,43,Rrelief,.125                  ! Thread relief vertical tangent point
K,44,Rrelief-.125,0.125       ! Thread relief center of curvature
```

```
/COM **** AREA ? - FIRST THREAD ****
K,105,RSout,0.25
K,106,RSavg,0.25
K,107,RImax,0.25
K,108,RImin+HE,0.25+Y3
K,109,RImin,0.25+Y4
K,110,RImin,0.25+Y5
K,111,RImax,0.25+Y6
K,112,RImax,0.25+Pitch
K,113,RSavg,0.25+Pitch
K,114,RSout,0.25+Pitch

/COM **** LINES FOR COLLAR AT THREAD RELIEF ****
L,37,38
L,38,42
L,42,41
L,41,43
LARC,43,40,44,.125
L,40,39
L,39,37

A,10,11,13,12                 ! Nominal shell
A,12,13,14,16,15              ! Collar transition
A,15,16,18,17
A,17,18,22,21,20,19           ! Area at sealing surface
A,21,22,32,31                 ! Collar above sealing surface
A,31,32,34,33                 ! Collar - medium elements
A,33,34,36,35                 ! Collar - coarse element
A,35,36,38,37                 ! Collar - medium elements

AL,1,2,3,4,5,6,7

/COM **** GENERATE THREAD AREAS ****
A,43,41,106,107                         ! Thread relief - inside
A,41,42,105,106                         ! Thread relief - outside
A,107,106,113,112,111,110,109,108            ! Thread tooth
A,106,105,114,113                                 ! Thread outside

/COM **** LIFTING & LOCKING RING (EXTERNAL THREAD) ****
LOCAL,11,0,,0.08
K,1000,15.9/2                           ! 7.95"
K,1001,BOLTIR
K,1002,BOLTOR
K,1003,12.0
```

```
K,1004,REMIN
K,1005,REMAX,Y6-Y5
K,1006,REMAX,Y6-Y4
K,1007,REMAX-HE,Y6-Y3
K,1008,REMIN,Y6-Y2
K,1009,REMIN,PITCH

K,1010,12.0,PITCH
K,1011,BOLTOR,PITCH
K,1012,BOLTIR,PITCH
K,1013,15.9/2,PITCH

/COM ****AREA 5 ****
A,1003,1004,1005,1006,1007,1008,1009,1010         ! thread profile

/COM **** AREA ? ****
A,1002,1003,1010,1011                      ! outer (fine) transition

/COM **** AREA ? ****
A,1001,1002,1011,1012                       ! inner (coarse) transition

/COM **** AREA ? ****
A,1000,1001,1012,1013                                  ! ring

/COM **** SHIELD PLUG DIMENSIONS  ****
RPLUG1=15.78/2
RPLUG2=22.90/2
RPLUG3=23.975/2
RSEAL1=23.45/2                    ! o-ring groove
RSEAL2=23.375/2                   ! o-ring groove

/COM **** SHIELD PLUG     ****
LOCAL,12,0,,-1.81

/COM **** SHIELD PLUG OUTLINE ****
K,2000,RPLUG1,-1.94
K,2001,RPLUG2-0.181,-1.94
K,2002,RPLUG2,-1
K,2003,RPLUG2,0.155
K,2004,RPLUG3-0.300,0.155
K,2005,RPLUG3-0.300,0.001
K,2006,RPLUG3,0.001
K,2007,RPLUG3,0.155
```

```
K,2008,RPLUG3,1.81
K,2009,RPLUG1,1.81

/COM **** OTHER LOCATIONS ON SHIELD PLUG ****
K,2100,BoltIR,1.81
K,2101,BoltOR,1.81
K,2102,BoltIR,1.25
K,2103,BoltOR,1.25
K,2104,RPLUG3,1.25
K,2105,BOLTIR,0.35
K,2106,11.9,0.35

K,2107,RPLUG3,.35
K,2108,RPLUG2,.35

A,2102,2103,2101,2100                                  ! Under bolt
A,2103,2104,2008,2101                        ! Outside radius at top
A,2105,2108,2106,2107,2104,2103,2102         ! Center of plug
A,2005,2006,2007,2004
A,2003,2004,2007,2107,2106,2108
A,2000,2001,2002,2003,2108,2105,2102,2100,2009

/COM **** MESH AREAS (FINE TO COARSE)  ****
ESIZE,ELSIZE
TYPE,2                             ! Collar
MAT,4
AMESH,10
AMESH,12
AMESH,9

TYPE,4                             ! L/L ring
MAT,3
AMESH,14

TYPE,6                             ! Plug quads
MAT,1
AMESH,21

TYPE,2                             ! Collar quads
MAT,4
AMESH,4

ESIZE,1.5*ELSIZE
TYPE,2                             ! Collar quads
```

```
MAT,4
AMESH,11
AMESH,13
AMESH, 5

ESIZE,2*ELSIZE
TYPE,4                                ! Ring quads
MAT,3
AMESH,15

TYPE,6                                ! Plug quads
MAT,1
AMESH,22

ESIZE,4*ELSIZE
TYPE,2                                ! Collar quads
MAT,4
AMESH, 3
TYPE,6                                ! Plug quads
MAT,1
AMESH,20

TYPE,2
MAT,4
ESIZE,2*ELSIZE
AMESH,8
AMESH,6
AMESH,7

ESIZE,8*ELSIZE
TYPE,4                                ! Ring quads
MAT,3
AMESH,16

TYPE,6                                ! Plug quads
MAT,1
AMESH,18
AMESH,19

ESIZE,10*ELSIZE
TYPE,4                                     ! Ring quads
MAT,3
AMESH,17
```

```
TYPE,2                                  ! Collar quads
MAT,4
AMESH,2

ESIZE,15*ELSIZE
TYPE,2                                  ! Collar quads
MAT,4
AMESH,1

TYPE,6                                  ! Plug quads
MAT,1
AMESH,23


AGEN,11,12,17,1,,0.25                        !  Generate 11 threads
ALLS

/COM **** GROUP NODES FOR GAP SURFACES ****
LSEL,S,LINE,,45                         ! Shell - 1st thread
NSLL,,1                                      ! Select nodes on line
CM,T1SHELL,NODE                    ! Group nodes

LSEL,S,LINE,,96                         ! Shell - thread 2
NSLL,,1
CM,T2SHELL,NODE

LSEL,S,LINE,,124                        ! Shell - thread 3
NSLL,,1
CM,T3SHELL,NODE

LSEL,S,LINE,,152                        ! Shell - thread 4
NSLL,,1
CM,T4SHELL,NODE

LSEL,S,LINE,,180                        ! Shell - thread 5
NSLL,,1
CM,T5SHELL,NODE

LSEL,S,LINE,,208                        ! Shell - thread 6
NSLL,,1
CM,T6SHELL,NODE

LSEL,S,LINE,,236                        ! Shell - thread 7
NSLL,,1
```

```
CM,T7SHELL,NODE

LSEL,S,LINE,,264                  ! Shell - thread 8
NSLL,,1
CM,T8SHELL,NODE

LSEL,S,LINE,,292                  ! Shell - thread 9
NSLL,,1
CM,T9SHELL,NODE

LSEL,S,LINE,,320                  ! Shell - thread 10
NSLL,,1
CM,T10SHELL,NODE

LSEL,S,LINE,,348                  ! Shell - thread 11
NSLL,,1
CM,T11SHELL,NODE

LSEL,S,LINE,,52                   ! Ring - 1st thread
NSLL,,1
CM,T1RING,NODE

LSEL,S,LINE,,104                  ! Ring - thread 2
NSLL,,1
CM,T2RING,NODE

LSEL,S,LINE,,132                  ! Ring - thread 3
NSLL,,1
CM,T3RING,NODE

LSEL,S,LINE,,160                  ! Ring - thread 4
NSLL,,1
CM,T4RING,NODE

LSEL,S,LINE,,188                  ! Ring - thread 5
NSLL,,1
CM,T5RING,NODE

LSEL,S,LINE,,216                  ! Ring - thread 6
NSLL,,1
CM,T6RING,NODE

LSEL,S,LINE,,244                  ! Ring - thread 7
NSLL,,1
```

```
CM,T7RING,NODE

LSEL,S,LINE,,272                   ! Ring - thread 8
NSLL,,1
CM,T8RING,NODE

LSEL,S,LINE,,300                   ! Ring - thread 9
NSLL,,1
CM,T9RING,NODE

LSEL,S,LINE,,328                   ! Ring - thread 10
NSLL,,1
CM,T10RING,NODE

LSEL,S,LINE,,356                   ! Ring - thread 11
NSLL,,1
CM,T11RING,NODE


/COM **** SURFACES AT O-RING ****

LSEL,S,LINE,,21,22                      ! Collar
NSLL,,1
CM,CSEAL,NODE

LSEL,S,LINE,,78                    ! Plug
NSLL,,1
CM,PSEAL,NODE

LSEL,ALL
NALL

/COM **** GENERATE GAP ELEMENTS ****
TYPE,7
REAL,7
GCGEN,T1RING,T1SHELL
GCGEN,T2RING,T2SHELL
GCGEN,T3RING,T3SHELL
GCGEN,T4RING,T4SHELL
GCGEN,T5RING,T5SHELL
GCGEN,T6RING,T6SHELL
GCGEN,T7RING,T7SHELL
GCGEN,T8RING,T8SHELL
GCGEN,T9RING,T9SHELL
```

```
GCGEN,T10RING,T10SHELL
GCGEN,T11RING,T11SHELL

GCGEN,PSEAL,CSEAL

/COM **** BOLTS  ****
CSYS,12                          ! Same as shield plug local,12,0,,-1.81
K,3000,BOLTIR,1.810+.001                   ! K,2100,BoltIR,2.00
K,3001,BOLTOR,1.810+.001              ! K,2101,BoltOR,2.000
A,3000,3001,1011,1012          ! Connect to ring above 1st thread
TYPE,3                                     ! Bolt
MAT,2
REAL,1
ESIZE,8*ELSIZE
AMESH,84

/COM **** MERGE COINCIDENT NODES ON AREA BOUNDARIES ****
ESEL,S,TYPE,,2                        ! Shell collar
NSLE                                       ! Select nodes based on elements
KSLN                                       ! Select keypoints based on nodes
NUMMERG,NODE
NUMMRG,ELEM
NUMMERG,KP

ESEL,S,TYPE,,4                        ! Lifting & locking ring
NSLE
KSLN                                       ! Select keypoints based on nodes
NUMMERG,NODE
NUMMRG,ELEM
NUMMERG,KP

ESEL,S,TYPE,,6                        ! Shield plug
NSLE
KSLN                                       ! Select keypoints based on nodes
NUMMERG,NODE
NUMMRG,ELEM
NUMMERG,KP

ALLS

/COM **** GENERATE GAP ELEMENTS  ****
LSEL,S,LINE,,370                           ! Line on "bolt"
NSLL,,1                                    ! Select nodes on line
CM,BOLTGAPS,NODE                      ! Group nodes as "boltgaps"
```

```
LSEL,S,LINE,,68                             ! Line on plug
NSLL,,1                                     ! Select nodes on line
CM,PLUGGAPS,NODE                       ! Group nodes as "pluggaps"

*GET,NUM_BOLT,NODE,,COUNT                   ! Number of nodes = "num_bolts"
*DIM,NODE_I,,NUM_BOLT                            ! Dimension arrays for nodes
*DIM,NODE_J,,NUM_BOLT

/COM **** SORT NODES ON BOLT ****
CMSEL,,BOLTGAPS
*GET,YVAL,NODE,,MNLOC,Y                          ! Get y-value
*DO,I,1,NUM_BOLT
    *GET,MIN_R,NODE,,MNLOC,X                  ! Get value of minimum radius
    NODE_I(I)=NODE(MIN_R,YVAL,0)          ! Get node number at minimum radius
    NSEL,U,NODE,,NODE_I(I)                  ! Remove selected node from group
*ENDDO

/COM **** SORT NODES ON PLUG ****
CMSEL,,PLUGGAPS
*GET,YVAL,NODE,,MNLOC,Y                          ! Get y-value
*DO,I,1,NUM_BOLT
    *GET,MIN_R,NODE,,MNLOC,X                 ! Get value of minimum radius
    NODE_J(I)=NODE(MIN_R,YVAL,0)          ! Get node number at minimum radius
    NSEL,U,NODE,,NODE_J(I)                  ! Remove selected node from group
*ENDDO

ALLS

/COM ****GENERATE ELEMENTS ****              ! Jack bolt contact12 with plug
TYPE,8
REAL,8
*DO,I,1,NUM_BOLT
    E,NODE_J(I),NODE_I(I)
*ENDDO

NALL
EALL

/COM **** RELAX CONVERGENCE TOLERANCES ****
CNVTOL,F,,.01                          ! 1% on force (10*default)
!CNVTOL,M,,.01                         ! 1% on moment (10*default)

/COM **** BOUNDARY CONDITIONS ****
```

```
CSYS,12
NSEL,S,LOC,X,RPLUG1                        ! Inside of plug
NSEL,R,LOC,Y,-1.94,1.81
D,ALL,UX,0.0                               ! Fix radially

CSYS,0
NSEL,S,LOC,Y,-10.875                       ! Base of shell
D,ALL,UY,0.0                                    ! Fix vertical (rollers)
NALL

/COM **** LIP AT TOP OF COLLAR ****
/COM **** KEYPOINTS ****
K,800,RSOUT,4.7206
K,801,12.443,4.8228
K,802,RIMAX, 4.925

/COM **** LIP AREAS ****
A,256,263,800,801                                         ! Area 85
A,257,256,801,802                                         ! Area 86

/COM **** MESHING LIP AREAS 85, 86 ****
ESIZE,3*ELSIZE
TYPE,2                                                    ! Collar
MAT,4                                                     ! Collar
REAL,1
AMESH,85
AMESH,86

/COM **** MERGE AREA BOUNDARIES TO REST OF COLLAR ****
ESEL,S,TYPE,,2                                       ! Collar elem
NSLE
KSLN
NUMMRG,NODE
NUMMRG,ELEM
NUMMRG,KP

NALL
EALL
SAVE
FINI
/COM **** END OF MODEL ****


/SOLUTION
```

```
/COM **** FIRST STEP TO CLOSE GAPS  -  LS-1 ****
TUNIF,70
TREF,70

/TITLE,MCO CLOSURE THREADS - LOAD STEP 1 - THREAD CLOSURE
KBC,1                              ! Set change loads for load step 1
NSUBST,1                                    ! Number of substeps
NEQIT,10                           ! Number of equilibrium iterations

/COM **** DISPLACE RING UPWARDS TO CLOSE GAP ****
ESEL,S,TYPE,,4                              ! Select ring elements
NSLE                                             ! Select nodes on ring
NSEL,R,LOC,X,15.9/2                         ! Inside of ring
D,ALL,UY,.0046                              ! Move ring up
NALL
EALL

/COM **** DISPLACE SHIELD PLUG DOWNWARDS TO CLOSE GAP ****
ESEL,S,TYPE,,6                              ! Select plug elements
NSLE                                             ! Select nodes on plug
NSEL,R,LOC,X,RPLUG1                    ! Inside of plug
D,ALL,UY,-.00101                       ! Move plug down to compress seal

ALLS

LSWRITE      ! ****************** END OF LS-1 *************************

/TITLE,MCO CLOSURE: 124.1K BOLT LOAD, 270 F, 150. PRESS, 124.1K SEAL
LOAD-LS-2,THRDMIN
TUNIF,270
KBC,0                              ! Ramp change loads for load step 2
NSUBST,10                              ! Number of substeps
NEQIT,15                           ! Number of equilibrium iterations
AUTOTS,ON
NROPT,AUTO
NLGEOM,ON

FK,2003,FY,62050          ! Seal Preload on Plug- Total Preload 124,100 lb
FK,2004,FY,62050
F,549,FY,-31025             !  Seal Preload on Collar - 124,100 lb total
F,550,FY,-62050
F,551,FY,-31025
```

```
ESEL,S,TYPE,,4                          ! Select ring elements
NSLE                                         ! Select nodes on ring
DDELE,ALL,UY                            ! Remove y displacement

ESEL,S,TYPE,,5,6                        ! Select ring elements
NSLE                                         ! Select nodes on ring
DDELE,ALL,UY                            ! Remove y displacement
NALL
EALL

/**** COM APPLY PRESSURE LOAD ****
P_INT=150                                    ! Nominal internal pressure
PA_REAL=11.617*11.617
PA_MODEL=(RPLUG2*RPLUG2)-(RPLUG1*RPLUG1)
P_INT_P=P_INT*PA_REAL/PA_MODEL     ! Corrected pressure on plug bottom

LSEL,S,LINE,,82                         ! Shield plug - seal groove
LSEL,A,LINE,,86,87                      ! Shield plug side
LSEL,A,LINE,,11                         ! Collar at base
LSEL,A,LINE,,15                         ! Collar at taper
LSEL,A,LINE,,18
LSEL,A,LINE,,23
LSEL,A,LINE,,22                    ! Collar at seal
SFGRAD                             ! Reset gradient (none used)
SFL,ALL,PRES,P_INT                 ! Apply pressure

/**** COM SHIELD PLUG BOTTOM ****
LSELS,S,LINE,,85                        ! Shield plug bottom
SFL,ALL,PRES,P_INT_P
ALLS
SFTRAN                                  ! Transfer line loads to elements

EALL
NALL
ALLS

SAVE
LSWRITE
LSSOLVE,1,2
SAVE
FINI
```

COMPUTER RUN COVER SHEET

Project Number:	KH-8009-8
Computer Code:	ANSYS®-PC
Software Version:	5.3
Computer System:	Windows 95®, Pentium® Processor
Computer Run File Number:	KH-8009-8-04
Unique Computer Run Filename:	THRDMIN.out
Run Description:	Stress Analysis of the MCO Thread/Closure
Creation Date / Time:	14 December 1998 4:52:02 PM

DBarlow for Z, Sargent 2-12-99

Prepared By: Zachary G. Sargent Date

FOR JOE NICHOLS 2/12/99

Checked By: Joe Nichols Date

COMPUTER RUN COVER SHEET

Project Number:	KH-8009-8
Computer Code:	ANSYS®-PC
Software Version:	5.3
Computer System:	Windows 95®, Pentium® Processor
Computer Run File Number:	KH-8009-8-04
Unique Computer Run Filename:	THRDMAX.INP
Run Description:	Stress Analysis of the MCO Thread/Closure
Run Date / Time:	11 December 1998 3:37:52 PM

DBarlow for Z Sargent 2-12-99

Prepared By: Zachary G. Sargent Date

FOR JOE NICHOLS 2/12/99

Checked By: Joe Nichols Date

REVISION	**0**	1	2		PAGE 76 of 95
PREPARED BY / DATE	ZGS 4/17/97	ZGS 7/14/98	DB 02/12/99		
CHECKED BY / DATE	JN 4/17/97	HSA 7/14/98	[illegible] 02/12/99		

LISTING OF THRDMAX.INP FILE

```
/BATCH,LIST
/TITLE,MCO CLOSURE THREADS, PRELOAD ONLY, NO FRICTION, W/ SEAL
/COM REF. H-2-828042, REV. 1, MINIMUM MATERIALS BASED ON TOLERANCES,12-98
/COM 0.373 INCH THREAD RELIEF

/FILNAME,Thrd373
/PREP7

/TRIAD,LTOP

*AFUN,DEG
/COM **** SHELL COLLAR (INTERNAL THREADS) ****
ET,2,PLANE42,,,1    ! Axisymmetric Quads

/COM **** JACKING BOLTS ****
ET,3,PLANE42,,,1    ! Axisymmetric Quads

/COM **** LIFTING & LOCKING RING (EXTERNAL THREADS) ****
ET,4,PLANE42,,,1    ! Axisymmetric Quads

/COM **** SHIELD PLUG AND SEAL ****
ET,6,PLANE42,,,1    ! Axisymmetric Quads

ET,7,CONTAC48      ! Contact surface (gap) elements at threads
KEYOPT,7,7,1
R,7,1.0E+06

ET,8,CONTAC12             ! Contact elements under jacking bolts
KEYOPT,8,7,1
R,8,0,1.0E+05,.2946,1.0    ! Initial interference for preload at 200,000
lb.

/COM **** DEFINE VARIABLES ****
HS=.1657        ! Thread height
HE=.1406        ! Height of thread engagement
F=.0408         ! Crest width
DPITCH=24.5
RPITCH=DPITCH/2
PITCH=.25       ! PITCH

/COM **** SHELL DIMENSIONS ****
RSIN =24.04/2          ! Collar inside radius (below threads)
```

```
RSOUT=25.28/2           ! Collar outside radius

IRSHELL1=11.4925          ! Shell inside radius (lower section)
ORSHELL1=12.04            ! Shell outside radius (lower section)

REMIN=RPITCH-HS         ! External thread (locking & lifting ring)
REMAX=RPITCH

RIMIN=RPITCH-HE         ! Internal thread (shell collar)
RIMAX=RPITCH-HE+HS

RSAVG=(RIMAX+RSOUT)/2     ! Average radius at threads

RRELIEF=24.535/2

BOLTCIRC=21.75      ! Bolt circle diameter
BOLTSIZE=1.500      ! Bolt nominal diameter

BOLTIR=(BOLTCIRC-BOLTSIZE)/2       ! Diameter at inside edge jacking bolts
BOLTOR=(BOLTCIRC+BOLTSIZE)/2       ! Diameter at outside edge jacking
bolts
BOLTA=3.1415926*((BOLTOR*BOLTOR)-(BOLTIR*BOLTIR))

/COM **** SCALE FACTOR FOR BOLT E & SY (MODELED AS AXISYMMETRIC) ****
REALAREA=18*1.41     ! Tensile area of jacking bolts
SF=REALAREA/BOLTA    ! SF = Actual bolt area/modeled bolt area

ELSIZE=.7*0.05          ! Element size for thread mesh   .0350

/COM **** THREAD DIMENSIONS ****
Y2=0
Y3=(HS-HE)*TAN(7)
Y4=(HS*TAN(7))
Y5=(HS*TAN(7))+F
Y6=PITCH-Y5

/COM  **** MATERIAL PROPERTIES ****

/COM **** MATERIAL 1: SA-182 F304L
MP,NUXY,1,.3                 ! Poisson's constant with temperature
MP,DENS,1,493/1728           ! Weight density (493 lb/ft^3), assumed
constant w/temp

/COM **** NONLINEAR PROPERITES FOR MATERIAL 1 ****
```

```
ETAN=.006                       ! Use 5% tangent modulus
TB,BKIN,1,4                     ! Yield stress and tangent moduli v.
temperature
TBTEMP,70
TBDATA,1,25000,ETAN*28.3E+06
TBTEMP,200
TBDATA,1,21300,ETAN*27.6E+06
TBTEMP,270
TBDATA,1,19760,ETAN*27.18E+06
TBTEMP,300
TBDATA,1,19100,ETAN*27.0E+06

MPTEMP,1,70,200,270,300

/COM **** ELASTIC MODULI FOR MATERIAL 1 ****
MPDATA,EX,1,1,28.3E+06,27.6E+06,27.18E+06,27.0E+06

/COM **** MEAN COEFFICIENT OF THERMAL EXPANSION FOR MATERIAL 1 ****
MPTEMP,1,70,250,270,300
MPDATA,ALPX,1,1,8.46E-06,8.9E-06,8.94E-06,9.00E-06

/COM **** MATERIAL 2: SA-193 B8S, B8SA ****
MP,NUXY,2,.3                    ! Poisson's constant with temperature
MP,DENS,2,493/1728              ! Weight density (493 lb/ft^3), assumed
constant w/temp.

/COM **** NONLINEAR PROPERTIES FOR MATERIAL 2 ****
TB,BKIN,2,4                ! Yield stress and tangent moduli v. temperature
TBTEMP,70
TBDATA,1,SF*50000,ETAN*28.3E+06
TBTEMP,200
TBDATA,1,SF*50000,ETAN*27.6E+06
TBTEMP,270
TBDATA,1,SF*50000,ETAN*27.18E+06
TBTEMP,300
TBDATA,1,SF*50000,ETAN*27.0E+06

MPTEMP,1,70,200,270,300

/COM **** ELASTIC MODULI FOR MATERIAL 2 ****
MPDATA,EX,2,1,SF*28.3E+06,SF*27.6E+06,SF*27.18E+06,SF*27.0E+06

/COM **** MEAN COEFFICIENTS OF THERMAL EXPANSION FOR MATERIAL 2 ****
MPTEMP,1,70,250,270,300
```

```
MPDATA,ALPX,2,1,8.46E-06,8.90E-06,8.94E-06,9.00E-06

/COM **** MATERIAL 3: SA-182 F304N ****
MP,NUXY,3,.3                ! Poisson's constant with temperature
MP,DENS,3,493/1728              ! Weight density (493 lb/ft^3), assumed
constant w/temp.

/COM **** NONLINEAR PROPERTIES FOR MATERIAL 3 ****
ETAN=.006                   ! Use 5% tangent modulus
TB,BKIN,3,4                 ! Yield stress and tangent moduli v.
temperature
TBTEMP,70
TBDATA,1,35000,ETAN*28.3E+06
TBTEMP,200
TBDATA,1,28700,ETAN*27.6E+06
TBTEMP,270
TBDATA,1,26110,ETAN*27.18E+06
TBTEMP,300
TBDATA,1,25000,ETAN*27.0E+06

MPTEMP,1,70,200,270,300

/COM **** ELASTIC MODULI FOR MATERIAL 3 ****
MPDATA,EX,3,1,28.3E+06,27.6E+06,27.18E+06,27.0E+06

/COM **** MEAN COEFFICIENTS OF THERMAL EXPANSION FOR MATERIAL 3 ****
MPTEMP,1,70,250,270,300
MPDATA,ALPX,3,1,8.46E-06,8.9E-06,8.94E-06,9.00E-06

/COM **** MATERIAL 4: SA-182 F304 ****
MP,NUXY,4,.3                    ! Poisson's constant with temperature
MP,DENS,4,493/1728        ! Weight density (493 lb/ft^3), assumed constant
w/temp.

/COM **** NONLINEAR PROPERTIES FOR MATERIAL 4  ****
ETAN=.006             ! USE 5% TANGENT MODULUS
TB,BKIN,4,4           ! YIELD STRESS AND TANGENT MODULI V. TEMPERATURE
TBTEMP,70
TBDATA,1,30000,ETAN*28.3E+06
TBTEMP,200
TBDATA,1,25000,ETAN*27.6E+06
TBTEMP,270
TBDATA,1,23250,ETAN*27.18E+06
TBTEMP,300
```

```
TBDATA,1,22500,ETAN*27.0E+06

/COM **** ELASTIC MODULI FOR MATERIAL 4   ****
MPTEMP,1,70,200,270,300
MPDATA,EX,4,1,28.3E+06,27.6E+06,27.18E+06,27.0E+06

/COM **** MEAN COEFFICIENTS OF THERMAL EXPANSION FOR MATERIAL 4 ****
MPTEMP,1,70,250,270,300
MPDATA,ALPX,4,1,8.24E-06,8.57E-06,8.602E-06,8.65E-06

/COM **** LIST MATERIAL PROPERTIES ****
MPLIST
TBLIST

/COM **** SHELL COLLAR (INTERNAL THREAD) ****
K,10,IRSHELL1,-10.875
K,11,ORSHELL1,-10.875
K,12,IRSHELL1,-5.125
K,13,ORSHELL1,-5.125     ! Bottom of transition - outer shell

K,14,RSOUT,-4.525
K,15,IRSHELL1,-3.62      ! Top of transition - outer shell
K,16,RSOUT,-3.62

K,17,IRSHELL1,-2.715
K,18,RSOUT,-2.715

K,19,IRSHELL1,-1.81      ! Sealing surface
K,20,23.375/2,-1.81           ! Sealing surface
K,21,RSIN,-1.81          ! Sealing surface
K,22,RSOUT,-1.81              ! Sealing surface

K,31,RSIN,-1.56
K,32,RSOUT,-1.56

K,33,RSIN,-1.31
K,34,RSOUT,-1.31

K,35,RSIN,-0.5
K,36,RSOUT,-0.5

K,37,RSIN,-0.25
K,38,RSOUT,-0.25
```

```
K,39,RSIN,0                   ! Bottom of thread relief
K,40,RRELIEF-0.125,0          ! Bottom of thread relief - tangent point
K,41,RSAVG,0.125              ! Centerpoint of thread relief at vert.
tangent
K,42,RSOUT,0.125              ! Outside of thread relief at vert. tangent

K,43,RRELIEF,0.125            ! Thread relief vertical tangent point
K,44,RRELIEF-0.125,0.125      ! Thread relief center of curvature

/COM **** AREA ? - FIRST THREAD ****
K,105,RSOUT,0.25
K,106,RSAVG,0.25
K,107,RIMAX,0.25
K,108,RIMIN+HE,0.25+Y3
K,109,RIMIN,0.25+Y4
K,110,RIMIN,0.25+Y5
K,111,RIMAX,0.25+Y6
K,112,RIMAX,0.25+PITCH
K,113,RSAVG,0.25+PITCH
K,114,RSOUT,0.25+PITCH

/COM **** LINES FOR COLLAR AT THREAD RELIEF ****
L,37,38
L,38,42
L,42,41
L,41,43
LARC,43,40,44,.125
L,40,39
L,39,37

A,10,11,13,12                 ! Nominal shell
A,12,13,14,16,15              ! Collar transition
A,15,16,18,17
A,17,18,22,21,20,19           ! Area at sealing surface
A,21,22,32,31                 ! Collar above sealing surface
A,31,32,34,33                 ! Collar - medium element
A,33,34,36,35                 ! Collar - coarse element
A,35,36,38,37                 ! Collar - medium element

AL,1,2,3,4,5,6,7

/COM **** GENERATE THREAD AREAS ****
A,43,41,106,107                           ! Thread relief - inside
A,41,42,105,106                           ! Thread relief -outside
```

```
A,107,106,113,112,111,110,109,108       ! Thread tooth
A,106,105,114,113                             ! Thread outside

/COM **** LIFTING & LOCKING RING (EXTERNAL THREAD) ****
LOCAL,11,0,,0.08
K,1000,15.9/2                  ! 7.95"
K,1001,BOLTIR
K,1002,BOLTOR
K,1003,12.0

K,1004,REMIN
K,1005,REMAX,Y6-Y5
K,1006,REMAX,Y6-Y4
K,1007,REMAX-HE,Y6-Y3
K,1008,REMIN,Y6-Y2
K,1009,REMIN,PITCH

K,1010,12.0,PITCH
K,1011,BOLTOR,PITCH
K,1012,BOLTIR,PITCH
K,1013,15.9/2,PITCH

/COM **** AREA 5 ****
A,1003,1004,1005,1006,1007,1008,1009,1010         ! Thread profile
/COM **** AREA ? ****
A,1002,1003,1010,1011                                        ! Outer fine
transition
/COM **** AREA ? ****
A,1001,1002,1011,1012                                        ! Inner
(coarse) transition
/COM **** AREA ? ****
A,1000,1001,1012,1013                                        ! Ring

/COM **** SHIELD PLUG DIMENSIONS ****
RPLUG1=15.78/2
RPLUG2=22.90/2
RPLUG3=23.975/2
RSEAL1=23.45/2                              ! O-ring
RSEAL2=23.375/2                             ! O-ring groove

/COM **** SHIELD PLUG ****
LOCAL,12,0,,-1.81

/COM **** SHIELD PLUG OUTLINE ****
```

```
K,2000,RPLUG1,-1.94
K,2001,RPLUG2-0.181,-1.94
K,2002,RPLUG2,-1
K,2003,RPLUG2,0.155
K,2004,RPLUG3-0.300,0.155
K,2005,RPLUG3-0.300,0.001
K,2006,RPLUG3,0.001
K,2007,RPLUG3,0.155
K,2008,RPLUG3,1.81
K,2009,RPLUG1,1.81

/COM **** OTHER LOCATIONS ON SHIELD PLUG ****
K,2100,BOLTIR,1.81
K,2101,BOLTOR,1.81
K,2102,BOLTIR,1.25
K,2103,BOLTOR,1.25
K,2104,RPLUG3,1.25
K,2105,BOLTIR,0.35
K,2106,11.9,0.35

K,2107,RPLUG3,0.35
K,2108,RPLUG2,0.35

A,2102,2103,2101,2100                             ! Under bolt
A,2103,2104,2008,2101                             ! Outside radius at top
A,2105,2108,2106,2107,2104,2103,2102         ! Center of plug
A,2005,2006,2007,2004
A,2003,2004,2007,2107,2106,2108
A,2000,2001,2002,2003,2108,2105,2102,2100,2009

/COM **** MESH AREAS (FINE TO COARSE) ****
ESIZE,ELSIZE             ! 0.035"
TYPE,2                   ! Collar
MAT,4
AMESH,10
AMESH,12
AMESH,9

TYPE,4                   ! Locking/lifting ring
MAT,3
AMESH,14

TYPE,6                   ! Plug quads
MAT,1
```

```
AMESH,21

TYPE,2                   ! Collar quads
MAT,4
AMESH,4

ESIZE,1.5*ELSIZE
TYPE,2                   ! Collar quads
MAT,4
AMESH,11
AMESH,13
AMESH,5

ESIZE,2*ELSIZE
TYPE,4                   ! RING QUADS
MAT,3
AMESH,15
!
TYPE,6                   ! PLUG QUADS
MAT,1
AMESH,22

ESIZE,4*ELSIZE
TYPE,2                   ! Collar quads
MAT,4
AMESH, 3
TYPE,6                   ! Plug quads
MAT,1
AMESH,20
!
TYPE,2
MAT,4
ESIZE,2*ELSIZE
AMESH,8
AMESH,6
AMESH,7

ESIZE,8*ELSIZE
TYPE,4                   ! Ring quads
MAT,3
AMESH,16
TYPE,6                   ! Plug quads
MAT,1
AMESH,18
```

```
AMESH,19

ESIZE,10*ELSIZE
TYPE,4                   ! Ring quads
MAT,3
AMESH,17
TYPE,2                   ! Collar quads
MAT,4
AMESH,2

ESIZE,15*ELSIZE
TYPE,2                   ! Collar quads
MAT,4
AMESH,1
TYPE,6                   ! Plug quads
MAT,1
AMESH,23

AGEN,11,12,17,1,,0.25         !  Generate 11 threads
ALLS

/COM **** GROUP NODES FOR GAP SURFACES ****
LSEL,S,LINE,,45               ! Shell - 1st thread
NSLL,,1                            ! Select nodes on line
CM,T1SHELL,NODE          ! Group nodes

LSEL,S,LINE,,96               ! Shell - thread 2
NSLL,,1
CM,T2SHELL,NODE

LSEL,S,LINE,,124              ! Shell - thread 3
NSLL,,1
CM,T3SHELL,NODE

LSEL,S,LINE,,152              ! Shell - thread 4
NSLL,,1
CM,T4SHELL,NODE

LSEL,S,LINE,,180              ! Shell - thread 5
NSLL,,1
CM,T5SHELL,NODE

LSEL,S,LINE,,208              ! Shell - thread 6
NSLL,,1
```

```
CM,T6SHELL,NODE

LSEL,S,LINE,,236                ! Shell - thread 7
NSLL,,1
CM,T7SHELL,NODE

LSEL,S,LINE,,264                ! Shell - thread 8
NSLL,,1
CM,T8SHELL,NODE

LSEL,S,LINE,,292                ! Shell - thread 9
NSLL,,1
CM,T9SHELL,NODE

LSEL,S,LINE,,320                ! Shell - thread 10
NSLL,,1
CM,T10SHELL,NODE

LSEL,S,LINE,,348                ! Shell - thread 11
NSLL,,1
CM,T11SHELL,NODE


LSEL,S,LINE,,52                 ! Ring - 1st thread
NSLL,,1
CM,T1RING,NODE

LSEL,S,LINE,,104                ! Ring - thread 2
NSLL,,1
CM,T2RING,NODE

LSEL,S,LINE,,132                ! Ring - thread 3
NSLL,,1
CM,T3RING,NODE

LSEL,S,LINE,,160                ! Ring - thread 4
NSLL,,1
CM,T4RING,NODE

LSEL,S,LINE,,188                ! Ring - thread 5
NSLL,,1
CM,T5RING,NODE

LSEL,S,LINE,,216                ! Ring - thread 6
```

```
NSLL,,1
CM,T6RING,NODE

LSEL,S,LINE,,244              ! Ring - thread 7
NSLL,,1
CM,T7RING,NODE

LSEL,S,LINE,,272              ! Ring - thread 8
NSLL,,1
CM,T8RING,NODE

LSEL,S,LINE,,300              ! Ring - thread 9
NSLL,,1
CM,T9RING,NODE

LSEL,S,LINE,,328              ! Ring - thread 10
NSLL,,1
CM,T10RING,NODE

LSEL,S,LINE,,356              ! Ring - thread 11
NSLL,,1
CM,T11RING,NODE


/COM **** SURFACES AT O-RING ****

LSEL,S,LINE,,21,22                 ! Collar
NSLL,,1
CM,CSEAL,NODE

LSEL,S,LINE,,78                    ! Plug
NSLL,,1
CM,PSEAL,NODE

LSEL,ALL
NALL

/COM **** GENERATE GAP ELEMENTS ****
TYPE,7
REAL,7
GCGEN,T1RING,T1SHELL
GCGEN,T2RING,T2SHELL
GCGEN,T3RING,T3SHELL
GCGEN,T4RING,T4SHELL
```

```
GCGEN,T5RING,T5SHELL
GCGEN,T6RING,T6SHELL
GCGEN,T7RING,T7SHELL
GCGEN,T8RING,T8SHELL
GCGEN,T9RING,T9SHELL
GCGEN,T10RING,T10SHELL
GCGEN,T11RING,T11SHELL

GCGEN,PSEAL,CSEAL

/COM **** BOLTS ****
CSYS,12                                 ! Same as shield plug
local,12,0,,-1.81
K,3000,BOLTIR,1.810+0.001               ! K,2100,BOLTIR,2.00
K,3001,BOLTOR,1.810+0.001           ! K,2101,BOLTOR,2.000
A,3000,3001,1011,1012               ! Connect to ring above 1st thread
TYPE,3                              ! Bolt
MAT,2
REAL,1
ESIZE,8*ELSIZE
AMESH,84

/COM **** MERGE COINCIDENT NODES ON AREA BOUNDARIES  ****
ESEL,S,TYPE,,2                 ! Shell collar
NSLE                                ! Select nodes based on elements
KSLN                                ! Select keypoints based on nodes
NUMMERG,NODE
NUMMRG,ELEM
NUMMERG,KP

ESEL,S,TYPE,,4                 ! Lifting and locking ring
NSLE
KSLN                                ! Select keypoints based on nodes
NUMMERG,NODE
NUMMRG,ELEM
NUMMERG,KP

ESEL,S,TYPE,,6                 ! Shield plug
NSLE
KSLN                                ! Select keypoints based on nodes
NUMMERG,NODE
NUMMRG,ELEM
NUMMERG,KP
```

```
ALLS

/COM **** GENERATE GAP ELEMENTS  ****
LSEL,S,LINE,,370                          ! Line on "bolt"
NSLL,,1                                   ! Select nodes on line
CM,BOLTGAPS,NODE                      ! Group nodes as "boltgaps"

LSEL,S,LINE,,68                           ! Line on plug
NSLL,,1                                   ! Select nodes on line
CM,PLUGGAPS,NODE                      ! Group nodes as "pluggaps"

*GET,NUM_BOLT,NODE,,COUNT                       ! Number of nodes =
"num_bolts"
*DIM,NODE_I,,NUM_BOLT                             ! Dimension arrays for nodes
*DIM,NODE_J,,NUM_BOLT

/COM **** SORT NODES ON BOLT ****
CMSEL,,BOLTGAPS
*GET,YVAL,NODE,,MNLOC,Y                           ! Get Y-value
*DO,I,1,NUM_BOLT
    *GET,MIN_R,NODE,,MNLOC,X                      ! Get value of minimum
radius
    NODE_I(I)=NODE(MIN_R,YVAL,0)                 ! Get node number at minimum
radius
    NSEL,U,NODE,,NODE_I(I)                        ! Remove selected node from
group
*ENDDO

/COM **** SORT NODES ON PLUG ****
CMSEL,,PLUGGAPS
*GET,YVAL,NODE,,MNLOC,Y                           ! Get Y-value
*DO,I,1,NUM_BOLT
    *GET,MIN_R,NODE,,MNLOC,X                      ! Get value of minimum
radius
    NODE_J(I)=NODE(MIN_R,YVAL,0)                 ! Get node number at minimum
radius
    NSEL,U,NODE,,NODE_J(I)                        ! Remove selected node from
group
*ENDDO

ALLS

/COM **** GENERATE ELEMENTS ****
TYPE,8                                ! Jack bolt -contact12 with plug
```

```
REAL,8
*DO,I,1,NUM_BOLT
    E,NODE_J(I),NODE_I(I)
*ENDDO

NALL
EALL

/COM **** RELAX CONVERGENCE TOLERANCES ****
CNVTOL,F,,.01     ! 1% ON FORCE (10*DEFAULT)

/COM **** BOUNDARY CONDITIONS ****
CSYS,12
NSEL,S,LOC,X,RPLUG1                     ! Inside of plug
NSEL,R,LOC,Y,-1.94,1.81
D,ALL,UX,0.0                            ! Fix radially

CSYS,0
NSEL,S,LOC,Y,-10.875                    ! Base of shell
D,ALL,UY,0.0                                 ! Fix vertical (rollers)
NALL

/COM  **** LIP AT TOP OF COLLAR ****
/COM  **** KEYPOINTS ****
K,800,RSOUT,4.7206
K,801,12.443,4.8228
K,802,RIMAX, 4.925

/COM **** LIP AREAS ****
A,256,263,800,801                                      ! Area 85
A,257,256,801,802                                      ! Area 86

/COM **** MESHING LIP AREAS 85, 86 ****
ESIZE,3*ELSIZE
TYPE,2                                                 ! Collar
MAT,4                                                  ! Collar
REAL,1
AMESH,85
AMESH,86

/COM **** MERGE AREA BOUNDARIES TO REST OF COLLAR ****
ESEL,S,TYPE,,2                                    ! Collar elements
NSLE
KSLN
```

```
NUMMRG,NODE
NUMMRG,ELEM
NUMMRG,KP

NALL
EALL
SAVE
FINI
/COM **** END OF MODEL ****


/SOLUTION
/COM **** FIRST STEP TO CLOSE GAPS  -  LS-1 ****
TUNIF,70
TREF,70
/TITLE,MCO CLOSURE THREADS - LOAD STEP 1 - THREAD CLOSURE
KBC,1                                         ! Set change loads for load
step 1
NSUBST,1                                 ! Number of substeps
NEQIT,10                                 ! Number of equilibrium
iterations

/COM **** DISPLACE RING UPWARDS TO CLOSE GAP ****
ESEL,S,TYPE,,4                           ! Select ring elements
NSLE                                          ! Select nodes on ring
NSEL,R,LOC,X,15.9/2                      ! Inside of ring
D,ALL,UY,0.0046                          ! Move ring up
NALL
EALL

/COM **** DISPLACE SHIELD PLUG DOWNWARDS TO CLOSE GAP ****
ESEL,S,TYPE,,6                           ! Select plug elements
NSLE                                          ! Select nodes on plug
NSEL,R,LOC,X,RPLUG1                 ! Inside of plug
D,ALL,UY,-0.00101                        ! Move plug down to compress seal

ALLS

LSWRITE     ! **** END OF LS-1 ****

/TITLE,MCO CLOSURE: 200K BOLT LOAD, 270F, 150 Psi, LS2, Thrdmax
TUNIF,270
KBC,0                                    ! Ramp change loads for load step 2
NSUBST,40                                ! Number of substeps
```

```
NEQIT,40                           ! Number of equilibrium iterations
AUTOTS,ON
NROPT,AUTO
NLGEOM,ON

FK,2003,FY,62050      !  Seal preload on plug- total preload = 124,100 lb
FK,2004,FY,62050
F,549,FY,-31025                    !  Seal preload on collar - 124,100 lb
total
F,550,FY,-62050
F,551,FY,-31025

ESEL,S,TYPE,,4                     ! Select ring elements
NSLE                                    ! Select nodes on ring
DDELE,ALL,UY                       ! Remove Y displacement

ESEL,S,TYPE,,5,6                   ! Select ring elements
NSLE                                    ! Select nodes on ring
DDELE,ALL,UY                       ! Remove Y displacement
NALL
EALL

/COM **** APPLY PRESSURE LOAD ****
P_INT=150                                         ! Nominal internal
pressure
PA_REAL=11.617*11.617
PA_MODEL=(RPLUG2*RPLUG2)-(RPLUG1*RPLUG1)
P_INT_P=P_INT*PA_REAL/PA_MODEL     ! Corrected pressure on plug bottom

LSEL,S,LINE,,82                              ! Shield plug - seal groove
LSEL,A,LINE,,86,87                      ! Shield plug side
LSEL,A,LINE,,11                         ! Collar at base
LSEL,A,LINE,,15                         ! Collar at taper
LSEL,A,LINE,,18
LSEL,A,LINE,,23
LSEL,A,LINE,,22                         ! Collar at seal
SFGRAD                                  ! Reset gradient (none used)
SFL,ALL,PRES,P_INT                      ! Apply pressure

/COM **** SHIELD PLUG BOTTOM ****
LSELS,S,LINE,,85                        ! Shield plug bottom
SFL,ALL,PRES,P_INT_P
ALLS
SFTRAN                                  ! Transfer line loads to elements
```

```
EALL
NALL
ALLS

SAVE
LSWRITE

LSSOLVE,1,2
SAVE
FINI
```

COMPUTER RUN COVER SHEET

Project Number:	KH-8009-8
Computer Code:	ANSYS®-PC
Software Version:	5.3
Computer System:	Windows 95®, Pentium® Processor
Computer Run File Number:	KH-8009-8-04
Unique Computer Run Filename:	THRDMAX.OUT
Run Description:	Stress Analysis of the MCO Thread/Closure
Run Date / Time:	15 December 1998 11:55:20 PM

D Barlow for Zachary G. Sargent 2-12-99

Prepared By: Zachary G. Sargent Date

FOR JOE NICHOLS 2/12/99

Checked By: Joe Nichols Date

REVISION	0	1	2		PAGE 95 of 95
PREPARED BY / DATE	ZGS 4/17/97	ZGS 7/14/98	02/12/99		
CHECKED BY / DATE	JN 4/17/97	HSA 7/14/98	02/12/99		

Section 2 of 2

Document Information			
Document #	SD-SNF-DR-003	**Revision**	2
Title	MCO DESIGN REPORT		
Date	2/18/99		
Originator	SMITH KE	**Originator Co.**	DESH
Recipient		**Recipient Co.**	
References	ECN-648630,HNF-S-0426		
Keywords			
Projects	W-442		
Other Information			

PARSONS

CALCULATION PACKAGE

FILE NO: KH-8009-8-05

DOC. NO. HNF-SD-SNF-DR-003, Rev.2, Appendix 7

PAGE 1 of 77

PROJECT NAME: MCO Design

CLIENT: DE&S Hanford, Inc.

CALCULATION TITLE:

STRESS ANALYSIS OF THE MARK 1A STORAGE AND SCRAP BASKETS

PROBLEM STATEMENT OR OBJECTIVE OF CALCULATION:

PERFORM A STRESS ANALYSIS OF THE MARK 1A STORAGE AND SCRAP BASKETS IN ACCORDANCE WITH REVISION 5 OF THE MULTI-CANISTER OVERPACK (MCO) PERFORMANCE SPECIFICATION (REFERENCE 1). FOUR LOADING CONDITIONS ARE CONSIDERED:

1. LIFTING AT A MAXIMUM TEMPERATURE OF 100° C.
2. DEADWEIGHT STACKING INSIDE THE MCO AT A DESIGN TEMPERATURE OF 375° C.
3. VERTICAL DROP LOADING OF 35 G'S AT A MAXIMUM TEMPERATURE OF 132°C.
4. HORIZONTAL DROP LOADING OF 101 G'S AT A MAXIMUM TEMPERATURE OF 132° C.

CRITERIA ARE BASED ON THE ASME CODE, SUBSECTION NG.

REVISION 0a OF THIS APPENDIX REFLECTS THE CHANGES MADE TO THE MARK 1A SCRAP BASKET ONLY. CHANGES INCLUDE REPLACEMENT OF SHEET METAL SHROUD AND STIFFENER PLATES WITH COPPER AND ADDITION OF FINES DIVIDER TUBE.

REVISION 0b OF THIS APPENDIX REFLECTS THE CHANGES MADE TO THE BASEPLATE OF THE BASKETS (NEW HOLE PATTERN) AND EVALUATION OF THE WELD CONNECTING THE BASEPLATE TO THE COPPER SHROUD (SCRAP BASKET ONLY). THIS REVISION ALSO INCORPORATES THE CHANGE IN DESIGN TEMPERATURE OF 132°C IN LIEU OF 375°C [15].

REVISION 1 REFLECTED REPLACEMENT OF SHEET METAL SHROUD AND ADDITION OF DIVIDER TUBES. MODIFIED CALCULATIONS AS NECESSARY. ADDED THERMAL EXPANSION SECTION. REVISED NEW HOLE PATTERN FOR THE BOTTOM PLATE (INCLUDING ANALYSES) AND INCORPORATED EVALUATION OF COPPER/SHROUD BASEPLATE WELD FOR THE SCRAP BASKETS. REVISED TO INCORPORATE REDUCED SECTION OF CENTER SUPPORT ABOVE BASEPLATE WELD.

REVISION 2 COVERS THE CHANGE TO A HOLLOW CENTER POST WITH A THREADED CONNECTION TO THE BOTTOM PLATE, A REVISED SUPPORT ROD CROSS SECTION AND ANALYSIS, AND ATTACHMENT OF SHROUD USING SCREWS.

DOCUMENT REVISION	AFFECTED PAGES	REVISION DESCRIPTION	PREPARED BY INITIALS / DATE	CHECKED BY INITIALS / DATE	APPROVED BY INITIALS / DATE
0	1-85	Initial Issue	Bob Winkel	Joe Nichols	Charles Temus
1	1-82	See Above	Zachary Sargent	Henry Averette	Charles Temus
2	1-77	See Above	For P. Ness ZGS 2/9/99	Henry S. Averett HSA 2/9/99	Charles Temus CJT 2/9/99

TABLE OF CONTENTS

LIST OF FIGURES

LIST OF TABLES

LIST OF APPENDICES

1. INTRODUCTION

This calculation documents the evaluation of the Mark IA Storage and Scrap Baskets for lifting, deadweight, and drop accident loading. The structural adequacy evaluation is based upon Section III, Subsection NG of the ASME Code for the deadweight stacking and drop load conditions. As discussed in Section 4, the Mark 1A Storage and Scrap Basket structural components are identical. This permitted the combining of the Mark 1A basket evaluations into a single report.

2. REFERENCES

1. DE&S, 1997, *Performance Specification for the Spent Nuclear Fuel Multi-Canister Overpack*, HNF-S-0426, Rev. 5, Duke Engineering and Services Hanford, Richland, Washington. November '98.

2. "K-Basin SNF Storage Basket Mark 1A" Drawing No. H-2-82860, Rev. 2.

3. *ASME Boiler and Pressure Vessel Code, Section II, Materials, Part D-- Properties*, 1998 Edition, American Society of Mechanical Engineers, New York, New York.

4. *ASME Boiler and Pressure Vessel Code, Section III, Subsection NG*, 1998 Edition, American Society of Mechanical Engineers, New York, New York.

5. *ASME Boiler and Pressure Vessel Code, Section III, Subsection NF*, 1998 Edition, American Society of Mechanical Engineers, New York, New York.

6. Not Used

7. Roark, R. J. and Young, W. C., 1975, *Formulas for Stress and Strain*, 5th Edition, McGraw-Hill, New York, New York.

8. Avallone, E., and Baumeister, T., *Standard Handbook for Mechanical Engineers*, 9th Edition, McGraw-Hill, New York, New York.

9. Myers, J. A., 1962, *Handbook of Equations for Mass and Area Properties of Various Geometrical Shapes,* US Naval Ordnance Test Station, China Lake, California.

10. Bowles, J. E., 1988, *Foundation Analysis and Design,* 4th Edition, McGraw-Hill, New York City, New York.

11. AISC, 1989, *Manual of Steel Construction, Ninth Edition,* American Institute of Steel Construction, Chicago, Illinois.

12. Pugh, C. E, et al, 1972, *Currently Recommended Constitutive Equations for Inelastic Design Analysis of FFTF Components,* ORNL-TM-3602, Oak Ridge National Laboratory, Oak Ridge, Tennessee.

13. "K-Basin SNF Scrap Basket Mark 1A" Drawings H-2-828065, Revision 3.

14. Letter from K. E. Smith of DE&SH, "Basis for Changes to the Multi-Canister Overpack Design", dated 9 December 1997, DESH-9761486.

15. Letter from K. E. Smith of DE&SH, "Multi-Canister Overpack Pressure rating Matrix", dated 8 January 1998, DESH-9850136.

16. Machinery's Handbook, 17th Edition, Industrial Press, 1966.

17. G. C. Mok, L. E. Fischer, T. S. Hsu, "*Stress analysis of Closure Bolts for Shipping Casks*", NUREG/CR-6007, UCRL-ID-110637, U. S. Nuclear Regulatory Commission, 1992.

3. ASSUMPTIONS

1. For the vertical drop loading when the baskets are stacked within the MCO, it was conservatively assumed that the basket support rods are in alignment, with the exception of the bottom basket, which is rotated 30° relative to the baskets above. This configuration produces the maximum bending in the basket bottom plate.

2. Since the Performance Specification [1] does not specify the density of the scrap material in a loaded scrap basket, it is assumed that the scrap basket weight does not govern. The governing weight is assumed to be that of the fully loaded Mark 1A storage basket, and a weight of 2,400 lb is used in analysis.

3. For the horizontal drop evaluation, it was assumed that the top end support for the center post, which interfaces with either the basket above or the bottom of the shield plug assembly, is maintained throughout the drop. See Section 9 for a discussion and justification of this assumption.

4. Other assumptions as noted within the calculation documentation.

4. GEOMETRY

The Mark IA Storage and Scrap Basket geometries are defined in Drawing Nos. H-2-828060 and H-2-828065 [2], respectively. The primary structural components for both basket designs (bottom plate, support rods, and center post) are identical. The primary structural components and other significant components are identified in the Figure 1 sketch of the storage basket. The scrap basket has additional components in the form of six 60° shroud segments, fabricated from copper plate. When all 6 segments are fastened together they provide a fines area around the center post and stiffener plates between the outer shroud and the fines area. The shrouds provide no structural function except to position the scrap material during initial loading.

A summary of the function of each structural component is provided in Table 1. The bottom plate has a thickness of 1.2 inches with 1/2-inch flow holes, except in the center (where the bottom plate is attached to the center post), the thickness is 1.5 inches to accommodate the threaded connection. The center post is fabricated from 6.625 inch O.D. bar stock and fastened to the bottom plate using 5 inch diameter, 2-pitch acme stub threads. The top of the center post features a center coupling which interfaces with the lifting grapple and also provides stability by interfacing with a mating provision in the basket above when the baskets are stacked within the MCO. The coupling of the uppermost basket interfaces with the shield plug assembly. The approximately trapezoidal geometry of the support rods is selected to provide the maximum cross section for the available space. There is also a thick aluminum fuel-positioning plate, or fuel rack (storage basket only) which rests on the bottom plate. The fuel rack serves a locational function and is not subjected to a structural evaluation.

Both the storage and scrap basket designs include a shroud located on the outside circumference of the baskets. The storage basket shroud is fabricated out of 18 gauge sheet metal and is half-height. The scrap basket shroud is fabricated out of copper and is full-height. The use of copper for the scrap basket shroud increases dissipation of the heat produced by the fuel and is a modification from the original design. Since the fuel rack in the storage basket prevents significant loading to the shroud, the storage basket shroud is considered to be non-structural. Since the scrap basket shroud is fabricated out of copper, it is not classified as a structural component. However, since it is subjected to a relatively low pressure loading due to the scrap pieces bearing against the shroud, an evaluation is performed to demonstrate copper behavior under pressure and elevated temperature.

The Single Pass Reactor Fuel basket is a modified version of the Mark 1A fuel basket. A non-structural loading jig replaces the aluminum fuel rack. The fuel elements are stacked 2 to 3 high in each loading position. The combined weight of the jig and the SPR fuel in the Mark 1A fuel basket is less than the weight of the Mark 1A fuel. Therefore all analysis for the Mark 1A basket is bounded by the Mark 1A fuel load.

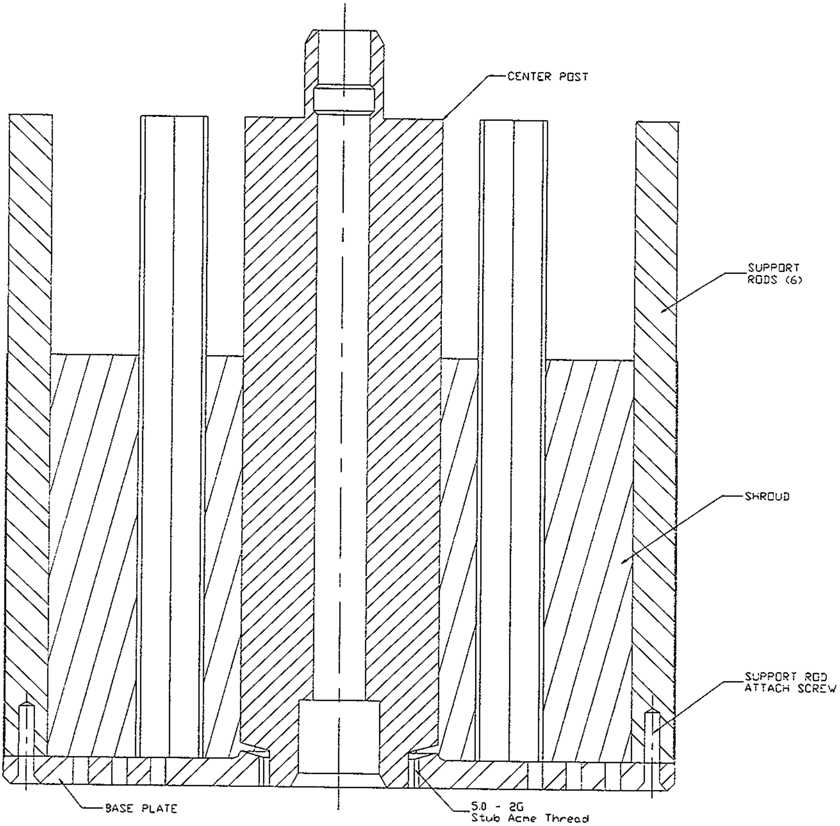

Figure 1: 180° Sector of Mark 1A Storage Basket Structural Components.

Table 1: Mark 1A Basket Structural Components

Component Name	Component Part No. in Dwgs. H-2-828060 & H-2-828065	Structural Functions
Center Post	8	(1) Primary load carrying component during lifting operations. (2) Provide support to above baskets when stacked inside the MCO. (3) Provides "void space" boundary for criticality safety, which must be maintained during normal operations and following drop accidents (Reference 1, Section 4.18.3).
Center Coupling	8	Primary load bearing component during lifting operations and a shear support for the center post during a horizontal drop accident.
Support Rod	12	Provide support to above baskets when stacked inside the MCO for normal operations and during vertical drop accidents.
Bottom Plate	9	Support the fuel during normal operations and maintain the position of the center post during drop accidents.

5. MATERIAL PROPERTIES

Per [2], the bottom plate and center post are fabricated from 304L stainless steel, and the support rods are fabricated from dual certified 304L/304 stainless steel. Other materials include the non-structural aluminum fuel rack for the storage basket and the copper shroud segments for the scrap basket. For this analysis, the only mechanical properties of interest are the elastic modulus, yield strength, ultimate strength, and ASME stress allowable, S_m. Properties for 304L are listed in Table 2, and for dual certified 304L/304 (identical with 304) are listed in Table 3, extracted from Reference [3].

The yield strength and ultimate strength of the copper shroud material are 7.65 ksi and 30 ksi, respectively, at 132 °C.

6. ACCEPTANCE CRITERIA

For the lifting, dead weight stacking, and drop loads considered, the appropriate acceptance criteria is discussed below.

6.1 Lifting Loads

Per Section 4.12.3 of the Performance Specification [1], the Mark1A basket designs shall meet the safety factors of 3 on material yield and 5 on material ultimate strength. These safety factors apply from 5°C to 100°C. The load bearing members of a special lifting device shall be capable of lifting three times the combined weight of the shipping container with which it will be used, plus the weight of intervening components of the special lifting device, without generating a combined shear stress or maximum tensile stress at any point in the device in excess of the corresponding minimum tensile yield strength of their materials of construction. They shall also be capable of lifting five times that weight without exceeding the ultimate tensile strength of the materials. The shear stress shall be taken as an average value over the cross section, and that the tensile stress may be due to direct or bending loads. The bending stress is defined as being linear over the cross section. Note that these stress limits (factor of three on yield and five on ultimate) are more restrictive than the limits on stress prescribed by the ASME Code, Section III, Subsection NG.

Table 2:
ASME Code Material Properties for Type 304L Stainless Steel

Temperature		E[1]	α[2]	S_y[3]	S_m[4]	S_u[5]
°F	°C	(x 10^6 psi)	(x10^{-6})	(ksi)	(ksi)	(ksi)
-20	-29		--	25.0	16.7	70.0
70	21	28.3	--	25.0	16.7	70.0
100	38	28.3	8.55	25.0	16.7	70.0
200	93	27.6	8.79	21.3	16.7	66.2
270	132	27.2[6]	8.94	19.8	16.7	62.5
300	149	27.0	9.00	19.1	16.7	60.9

Table 3:
ASME Code Material Properties for Type 304 Stainless Steel

Temperature		E[1]	α[2]	S_y[3]	S_m[4]	S_u[5]
°F	°C	(x 10^6 psi)	(x10^{-6})	(ksi)	(ksi)	(ksi)
-20	-29		--	30.0	20.0	75.0
70	21	28.3	--	30.0	20.0	75.0
100	38	28.3	8.55	30.0	20.0	75.0
200	93	27.6	8.79	25.0	20.0	71.0
270	132	27.2[6]	8.94	23.25	20.0	67.5
300	149	27.0	9.00	22.5	20.0	66.0

Notes for Tables 2 and 3:

1. Table TM-1, Material Group G
2. Table TE-1
3. Table Y-1
4. Table 2A
5. Table U
6. Underlined values determined by linear interpolation, all others taken from ASME B&PV Code, Section II, Part D.

The “load bearing members of a special lifting device” are interpreted to apply to all components of the storage baskets in the load path between the lifting grapple and fuel. At the maximum lifting temperature of 100°C, the allowables are:

$$\frac{Sy}{3} = \frac{21.04ksi}{3} = 7.01ksi$$
$$\frac{Su}{5} = \frac{65.6ksi}{5} = 13.12ksi$$
$$\Rightarrow Use: Pm + Pb \leq 7.01ksi$$

6.2 Deadweight Loads

Per Section 4.12.3 of [1], the Mark IA baskets “shall meet the intent of ASME Boiler and Pressure Vessel Code, Section III, subsection NG”. For primary membrane and primary membrane plus bending stresses, the allowable stresses of Table 4 apply. The dead weight stacking basket configuration is identical to the vertical drop accident configuration. Since the loading differences far exceed the allowable differences, the vertical drop accident condition obviously bounds the dead weight condition.

Table 4:
Allowable Stresses - Deadweight

Temperature		S_M	Design/Level A Stress Limits	
°F	°C	(from Table 2)	P_M (S_M)	$P_M + P_B$ ($1.5S_M$)
212	100	16.7 ksi	16.7 ksi	25.1 ksi
270	132	16.7 ksi	16.7 ksi	25.1 ksi

Notes: 1. Design and Level A stress limits from NG-3221 and NG-3222, respectively.

2. Axial compressive stresses must be limited to values established in accordance with one of the following:

-- NB-3133.3 (external pressure)
-- NB-3133.6 (axial compression on cylindrical shells)
-- NB-3322.1 (c) (column type members)

3. Pure shear shall be limited to $0.6S_M$ per NG-3227.2(a).

6.3 Drop Loading Conditions

From Table 3 of the Performance Specification [1], the bounding vertical drop loading is 35 g's and the horizontal drop loading is 101 g's. The only potential sequential drop (vertical followed by horizontal) in the Performance Specification is the "Dropped with Cask" case, which specifies a 27g vertical(corner)/101g horizontal. In this report, the sequential drop is conservatively evaluated as a 35g/101g combination, except for Section 9, where a 27g/101g combination is used. A maximum drop temperature of 132° C (270° F) is specified in Rev. 3 of [1], which was released following the completion of the Mark1A basket analyses. The previous revision of Reference 1 specified a maximum drop temperature of 200°C. Since the existing analyses were conservative, not all of the analyses were repeated when Rev. 3 was released. However, the summary table (Table 6) given in Section 8.7 was modified to reflect the Rev. 3 drop temperature reduction. For Level D events, the ASME Subsection NG acceptance criteria is specified in Appendix F, Para. F-1440, which refers to Para. F-1300, with some specified exceptions. The appropriate allowable stresses are listed in Table 5.

Note that allowables are listed for the revised drop temperatures only. As indicated, the decrease in drop temperature has a significant influence on the allowables, particularly for allowables which are a function of the ultimate strength.

In addition to the Table 5 stress limits, Section 4.19.3 of the Performance Specification [1] stipulates a nuclear criticality safety requirement that a nominal void of 6.625 in. in diameter be maintained at the basket centerline. For all load conditions including the drop accidents, this centerline void cannot deviate from the centerline by more than two inches. For the vertical drop, this requirement is met by demonstrating conformance to the ASME Code center post buckling requirements. For the horizontal drop, this requirement is addressed by predicting the maximum transverse deformation (elastic/plastic) in the center post for the horizontal drop loading.

6.4 Shroud Segment to Bottom Plate Attachment Criteria

Per item 8 of [14], "the copper subassembly of the scrap basket shall be designed to withstand a distributed load in tension on the outside shroud of 10,350 pounds before yielding and 17,250 pounds before failure. This provides a safety factor of three to yield and five to failure during loading of the basket into the MCO". The evaluation is performed in Section 8.4.1 of this package.

Table 5: Allowable Stresses for Drop Loading

Stress Category	ASME Appendix F Paragraph No.	Stress Limit Criteria	Allowable Stress Value @ 132°C (ksi)
Primary Membrane	F-1331.1(a)	$2.4S_m$[1] (Elastic Analysis)	40.1
	F-1341.2(a)	$0.7S_u$ (Plastic Analysis)	43.8
Primary Membrane + Bending	F-1331.1(c)(1)	$1.5(2.4S_m)$[1] (Elastic Analysis)	60.1
	F-1341.2(b)	0.9Su (Plastic Analysis)	56.3
Ave. Primary Shear	F-1331.1(d)	$0.42S_u$	26.3
Center Post Compression	F-1331.5(b)	150% of NB-3133 Limit	—
Support Rod Buckling[2]	F-1334.3[2]	F-1334.3(a)(1) Analysis	—

Notes:

1. Based upon the lesser of $2.4S_m$ and $0.7S_u$.
2. Linear type component support criteria used for support rod column buckling.

7. LOAD CONDITIONS & COMBINATIONS

As discussed above, the Mark IA Storage Baskets are evaluated for four load cases: (1) lifting, (2) dead weight stacking inside the MCO, (3) a 35g vertical drop, and (4) a 101g horizontal drop. Each of these load conditions are independent, and are not combined. There is, however, the concern for a sequential drop, i.e. an end drop followed by a horizontal drop. This concern is addressed by examining the maximum plastic distortion occurring in the vertical drop, which could potentially impact the buckling strength for a subsequent horizontal drop.

8. STRESS ANALYSIS CALCULATIONS

The Mark IV Storage Baskets are evaluated using both hand calculations and finite element calculations (ANSYS). The finite element calculations are limited to stress predictions for the support rods (Section 8.2) and the relatively complex bottom plate (Section 8.3).

8.1 Center Post

The center post and its connection to the bottom plate was evaluated for lifting and for both a 35g vertical drop and a 101g horizontal drop event. For the vertical drop, the controlling ASME Code limit is axial compression (column buckling). For the horizontal drop, the threaded joint controls.

8.1.1 Lifting

Lifting loads are carried by the center coupling and by the acme threaded connection between the center post and the bottom plate. The lifting analysis of the center coupling is given in Section 8.1.4. The threads are seated with a torque of 340 - 400 ft-lb and tack welded to keep snug. Since this torque is very small compared to the size of the threads, no further consideration of the torque is necessary. The analysis of the threaded connection is now performed.

The preload of the center post thread is computed to equal the weight of the loaded basket times two to account for suddenly applied loads.

$$\text{Torque} = \frac{(.17)(2)(2400)(5.0)}{(12)} = 340\ \text{ft-lb} \quad \text{therefore use 340 to 400 ft-lb.}$$

The shear area of the acme threads is found in Section 8.1.3 as $A_s = 7.977\ \text{in}^2$ for an effective length of thread engagement of one inch, or $(0.9)7.977 = 7.179\ \text{in}^2$ for the effective thread length of 0.9 inches. Conservatively assuming that the load on the joint is the entire weight of the basket of 2,400 lb, the shear stress in the threads is

$$\tau = \frac{2{,}400}{7.179} = 334\ \text{psi}$$

From Section 6.1, the allowable stress in lifting is 7.01 ksi, or 7,010 psi. The stress ratio on thread shear for the acme threads is therefore

$$\text{Ratio} = \frac{334}{7{,}010(0.6)} = 0.079$$

where the factor of 0.6 modifies the allowable for shear stress. The minimum diameter in the thread relief is $d_{eff} = 4.60$ inches. With the bushing bore diameter of $d_b = 2.71$ inches, the tensile stress area is

$$A_t = \frac{\pi}{4}\left(d_{eff}^2 - d_b^2\right) = 10.85\ \text{in}^2$$

The tensile stress is

$$\sigma = \frac{2{,}400}{A_t} = 221\,\text{psi}$$

And the stress ratio is

$$\text{Ratio} = \frac{221}{7{,}010} = 0.032$$

Therefore, the center post attachment to the bottom plate is acceptable for the lifting condition.

8.1.2 Vertical Drop Load Condition

The center post is loaded in compression by the vertical drop load. The lowest of the six baskets is subjected to the greatest load. The Mark 1A basket weight is bounded by the weight of the storage basket, at 2,400 lb. The buckling capacity of the center post is checked using ASME Code, Appendix F, Subsection F-1334.3(b). Material temperature is 132 °C.

$E = 27.2 \times 10^6$ psi	304L Stainless Steel Modulus
$S_y = 19.8$ ksi	304L Stainless Steel Yield Strength
$K_p = 0.8$	Center Post Effective Length Factor, Conservatively Assumed Pinned at Top (Table C-C2.1, [11])
$L_p = 22$ in.	Length of Center Post, From Threaded Joint to Flat Top (bounding)
$R = 6.625/2 = 3.313$ in.	Outside Radius of Center Post
$R_i = 1.75/2 = 0.875$ in.	Inside Radius of Center Post
$A_p = \pi\left(R^2 - R_i^2\right) = 32.08$ in^2	Cross Sectional Area of Center Post
$r_P = 0.5\sqrt{R^2 + R_i^2} = 1.713$ in.	Radius of Gyration of Center Post
$\lambda = \frac{K_P L_P}{r_P}\frac{1}{\pi}\sqrt{\frac{S_Y}{E}} = 0.088$	From F-1334.3

Since the center post is a heavy shape, F-1334.3(b)(2) applies. For $\lambda < 1$,

$$P_Y = S_Y(A_P) = 63.52 \times 10^4 \text{ lb.}$$

$$P = \frac{1-\frac{\lambda^2}{4}}{1.11+0.75\lambda+0.83\lambda^2-0.81\lambda^3} P_Y = 53.64 \times 10^4 \text{ lb.}$$

The axial buckling load on the center post of the lowest of the six baskets is

$$P_{cp} = 5(35)(2{,}400) = 42.0 \times 10^4 \text{ lb.}$$

and the ratio of load to capacity is

$$\text{Ratio} = \frac{P_{cp}}{P} = 0.783$$

Thus, the bottom basket center post capacity is adequate to support the entire 35g vertical drop load. Due to deflection of the bottom plate under load, the load is shared between the center post and the support rods, and the center post does not carry the entire load, as discussed in Section 8.2. Therefore, buckling of the center post is not of concern.

8.1.3 Horizontal Drop Load Condition

For the horizontal drop, the center post is loaded in beam bending. Since the post is attached essentially rigidly to the bottom plate and is simply supported at the top coupling, it may be modeled as a propped cantilever. The loading consists of a uniform loading of 8 fuel elements (60° section), plus the center post weight, using 101g. The total weight of the center post is bounded by 220 lb. Each fuel element weighs 39.7 lb. From Section 8.1.1, the length of the center post is bounded by 22 inches. The horizontal loading (1g) is therefore

$$W_T = \frac{220+8(39.7)}{22} = 24.4 \text{ lb/in}$$

The moment in a propped cantilever is maximum at the wall (i.e., at the joint to the bottom plate), which is the location of the threaded joint and of the minimum moment resisting cross section. The maximum moment is:

$$M_P = \frac{W_T L_P^2}{8}(101) = 149{,}096 \text{ in}-\text{lb}$$

The center post is attached to the bottom plate using a single stub acme thread having a five inch diameter and 2-pitch. From Machinery's Handbook [16], the stress area, A_t, and thread shear area, A_s, of the threaded portion is

$$A_t = \pi\left(\frac{E_s + K_s}{4}\right)^2 = 17.507\ \text{in}^2$$

$$A_s = \pi K_n\left[0.5 + \frac{1}{p}\tan(14.5)\left(E_s - K_n\right)\right] = 7.977\ \text{in}^2/\text{in}$$

where E_s = 4.7973 in, K_s = 4.6454 in, and K_n = 4.7250 in, from Table 7b of [16]. Although the boss thickness of the bottom plate is 1.5 inches, due to the thread relief groove, the minimum thread engaged length is 0.922 inches. Conservatively, 0.9 inches is assumed in analysis.

The shear stress in the threads due to the applied moment at the joint, M_p, is found as follows. The moment is opposed by a couple having a force F along the post axis, with a pivot point a distance R = 3.313 inches away at the O.D. of the post. The force is

$$F = \frac{M_p}{R} = 45{,}003\ \text{lb}$$

Conservatively assume that only the threads on the side of the post far from the pivot are active in resisting the load (i.e., half of the thread area), so that the shear area is

$$A_{sa} = (0.9)(0.5)A_s = 3.590\ \text{in}^2$$

where the factor of 0.9 is the effective length of the threads, and the factor of 0.5 accounts for only a half-circumference of thread. The shear stress in the threads is

$$\tau = \frac{F}{A_{sa}} = 12{,}536\ \text{psi}$$

From Table 4, the allowable average primary shear stress for the drop condition is 26.3 ksi. The stress ratio on center post attachment thread shear is

$$\text{Ratio} = \frac{\tau}{26{,}300} = 0.477$$

The threaded portion is also subject to bending stress on the cross section. The moment of inertia of the threaded portion is

$$I = \frac{\pi}{64}\left(d_{eff}^4 - d_b^4\right) = 19.33\ in^4$$

where the minimum diameter of the thread relief, d_{eff} = 4.60 inches, and the bushing bore diameter, d_b = 2.71 inches. The c-distance is $d_{eff}/2$, or 2.3 inches. The bending stress is

$$\sigma = \frac{M_p c}{I} = 17{,}740\ psi$$

From Table 4, the allowable stress for primary membrane plus bending is 60.1 ksi (elastic analysis). The stress ratio is

$$Ratio = \frac{\sigma}{60{,}100} = 0.295$$

Therefore, the center post and its attachment to the bottom plate are acceptable.

8.1.4 Center Coupling

The center coupling is an extension of the center post which interfaces with adjacent baskets and the MCO shield plug. It is loaded during lifting and during a horizontal drop. During deadweight stacking, the center coupling interface with the center bushing is dimensioned to prevent loading of the center coupling. The minimum section of the coupling is the lifting grapple interface, which has an O.D./I.D. of 2.66"/2.00":

Check net section for tension (lifting load) and shear (horizontal drop loading)

$$A_{MIN} = \left[(2.66)^2 - (2.00)^2\right]\frac{\pi}{4} = 2.416\ in^2$$

$$\sigma_{Lift} = \frac{2{,}400}{A_{MIN}} = 993\ psi$$

$$Ratio = \frac{\sigma_{LIFT}}{\frac{S_Y}{3}} = 0.142$$

Thus, the center coupling is O.K. for the lifting load condition. For the horizontal drop, check the minimum section for average shear adequacy. Conservatively ignore bending resistance of bottom plate connection (top end reaction = 1/2 of 101g loading of eight 39.7 lb fuel pins).

$$\tau_{DROP} = \frac{8(39.7\text{lb})(101\text{g})}{2(A_{MIN})} = 6.64(10^3)\text{ psi}$$

S_U = 62500 psi

$$\text{Ratio} = \frac{\tau_{DROP}}{0.42S_U} = 0.253$$

Therefore, the center coupling is also adequate for the horizontal drop 101g loading.

8.2 Support Rod

The axial load carrying capacity of the support rods is determined using the approach outlined in ASME B&PV Code, Appendix F, Subsection F-1334.3(a)(1). According to this methodology, the allowable capacity of the support rods is (2/3) of the maximum capacity determined by a nonlinear buckling finite element analysis, taking account of material plasticity and load eccentricity. The support rod is 21.967 inches long, and is bolted securely to the baseplate. The cross section of the rod, showing the minimum fabrication envelope, is shown in Figure 2. These minimum dimensions are conservatively used to model the support rod. The material is Type 304L stainless steel, certified as having the mechanical properties of Type 304.

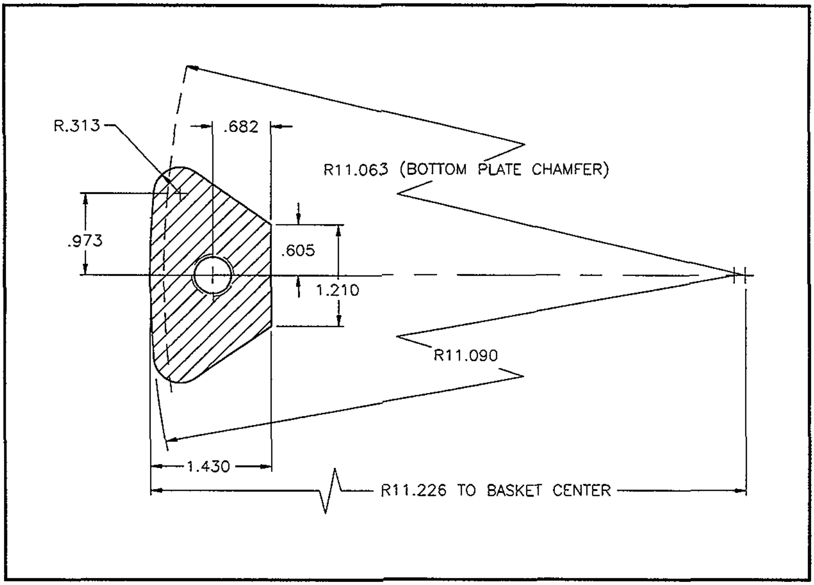

Figure 2: Cross Section of Support Rods

The ANSYS® 5.4 FEA model of the rod is shown in Figure 3. The rod is conservatively given a length of 22 inches. Part of the shell is included to model the lateral support of the support rod supplied by the shell as the rod deformed shape moves outward. The rod is constructed of SOLID45 elements, and the MCO shell of SHELL43 elements, both capable of large deflections and nonlinear material behavior. The potential contact between the rod and the shell is modeled using CONTACT52 gap elements. Conservatively, the maximum gap (considering fabrication tolerances) is used, equal to 0.265 inches.

Since there are six support rods, a 1/6th (60°) symmetry model is used. The bottom of the support rod is considered fixed to the bottom plate of the lowest basket. The MCO shell is ½ inches thick, and is joined to the bottom plate of the canister at essentially the same elevation as the lower end of the support rod. The upper end of the shell segment is located 22 inches (approximately one basket length) above the top of the support rod. Since the support rod forces are very localized, this length is adequate. The circumferential edges of the shell are constrained in a manner consistent with symmetry, the bottom of the shell is fixed, and the top is free.

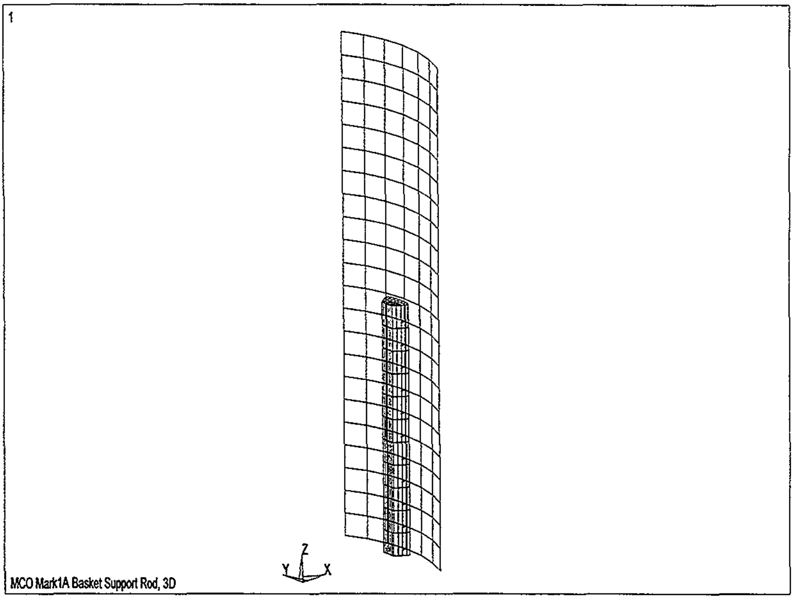

Figure 3: Support Rod Finite Element Model

The load is applied to the support rod as a defined displacement in the axial direction, and is applied at a node which is located 0.25 inches radially inward from the centroid of the rod. This offset provides the initial buckling eccentricity, and is derived from the chamfer located on the lower surface of the bottom plate. Based on the radius of the chamfer (11.063 inches) and the radial location of the rod (outer edge at a radius of 11.226 inches), the radial distance of the top face of the rod which is not loaded by the bottom plate is (11.226 - 11.063) = 0.163 inches. (The outer radius of contact is shown as a dotted line in Figure 2). However, a load offset equal to the entire ¼ inch chamfer is conservatively used. This radially inward bias of the load also ensures that the initial buckling of the rod will be in the outward direction, resulting in lateral support from the MCO shell. In addition, the radial displacement of the loaded node at the upper end of the rod is constrained to be zero, consistent with a pinned end. This requires that adequate friction is present between the bottom plate of the basket above and the support rod. As is demonstrated, the resulting radial reaction load is easily obtained with a conservative, lower bound friction coefficient. From Table 3.2.1 of Reference [8], the lowest dynamic, dry coefficient of friction for steel on steel is 0.42. However, a value of 0.1 may be conservatively assumed, which is adequate to pin the upper end of the support rod. The material properties of the support rod and MCO shell are based on a bilinear stress strain curve for Type 304 material, utilizing the yield strength of 23,250 psi at 270 °F from Table 3 and a tangent modulus of 160,000 psi from Table B1 of [12].

The ANSYS finite element model input listing is given in Appendix A (Rod3d.inp/Rod3d.out). The resulting force-deflection curve for a single support rod is shown in Figure 4. The choice of 0.25 inches for the displacement of the top of the rod is arbitrary, and ensures that the maximum capacity of the rod is developed. The first, lower peak is the initial bifurcation point as the rod begins to buckle. The lowest point is reached just before the rod first contacts the MCO shell, at which point the buckling capacity increases steeply. The curve levels off as an inward deformation of the lower part of the rod begins to occur. The stress in the shell remains elastic throughout. The maximum load carrying capacity of a single support rod is 65,625 lb, at an axial deformation of 0.2 inches. The radial reaction of the top of the rod is 6,400 lb, and to keep it in place a minimum coefficient of friction of 6,400/65,625 = 0.098 is needed, which is below the lower bound coefficient discussed above. Therefore, the pinned assumption of the upper end of the rod is valid. The deformed shape of the rod at an upper displacement of 0.2 inches is shown in Figure 5.

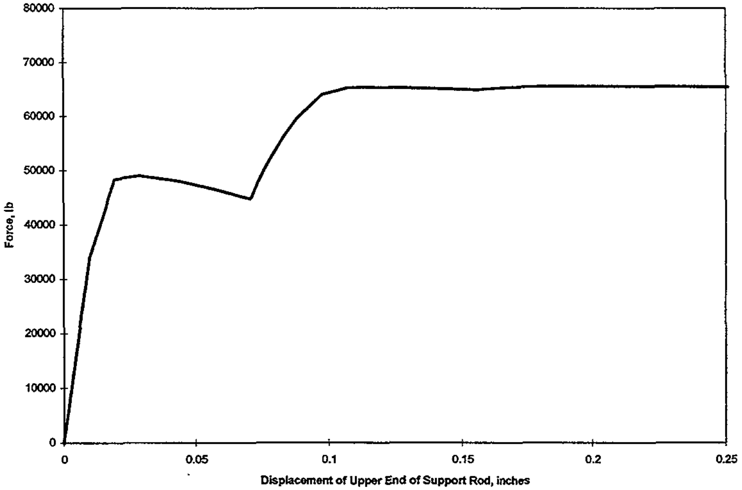

Figure 4: Support Rod Force Deflection Curve (Single Rod)

Since there are six support rods per basket, the total load carrying capacity of the support rods in the lowest basket is 6(65,625) = 393,750 lb. The length of the rods may vary by 0.030 inches, but since (as shown in Figure 4) the force-deflection curve is relatively flat in the region of maximum capacity, the effect of length variation of this modest magnitude is negligible. Per ASME Code Appendix F, Subsection 1334.3(a)(1), the allowable capacity is (2/3) of this value, or

$$P_a = (2/3)(393{,}750) = 262{,}500 \text{ lb}$$

The load applied to the support rods is based on the load distribution between the center post and the rods, and is a function of the stiffness of the bottom plate. The Figure 7 ANSYS model was used to determine the load distribution. The fuel pressure was applied to the plate, and the support rod and center post reactions were 5,209 lb and 3,778 lb, respectively, for a total load of 8,987 lb. The load sharing ratios are therefore 3,778/8,987 = 0.42 for the center post, and 5,209/8,987 = 0.58 for the support rods. This analysis assumed simultaneous contact at all six rods and the center post. As stated above, the length of the rods and the center post could individually vary by 0.030 inches. However, since the support rods retain essentially their maximum capacity up to and beyond a displacement of 0.2 inches, the height variation of 0.03 inches has no effect on the load distribution. The load which the support rods must carry is

$$P = (5)(2{,}400)(35)(0.58) = 243{,}600 \text{ lb}$$

which is equivalent to 58% of the weight of five Mark 1A storage baskets weighing 2,400 lb each under a 35g impact. The stress ratio is

$$\text{Ratio} = \frac{P}{P_a} = 0.928$$

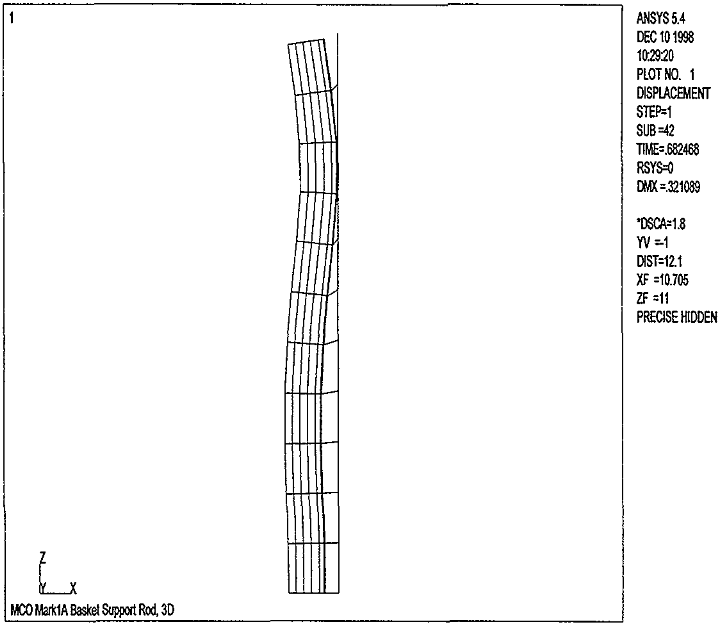

Figure 5: Support Rod Deformed Shape

Note that, at the maximum applied load of 243,600 lb (40,600 lb/rod), the axial displacement of each rod is only 0.014 inches, and thus, the rods have still not reached the first, lower bifurcation point. Therefore, the margin of safety is substantial. Two other conservatisms in the analysis are worthy of note. First, the relatively large flat surface on the top of the support rod leads to a degree of "load centering" as shown in Figure 6. The rotation of the top of the support rod under eccentric loading has the effect of moving the load application point outward, thus reducing the eccentricity. In the model, by contrast, the eccentricity was not only upper-bounded, but held constant. Second, paragraph F-1322.3(c) permits an adjustment of the stress-strain properties to account for strain rate effects. The increase in the yield strength for the drop accident load cases was conservatively ignored. Therefore, buckling of the support rods in an end drop is not of concern.

The support rods are attached to the base plate with 5/8 -11 flat head screws. Torque is applied to the limits of Reference (4.), Subsection NG-3232.2, the preload stress being limited to $(1.2)0.9S_Y$. For SA-193 material at 270° F, $S_Y = 3(S_M) = 3(11,600) = 34,800$ psi. The stress limit is therefore (1.2)(0.9)34,800 = 37,584 psi. The maximum allowed preload force is therefore

$$F = \sigma A_S = 8494 \text{ lb.}$$

The stripping of the thread in the support rod is checked for this loading:

$$\frac{A_{S,INTERNAL}}{L_E} = \pi n D_{SMIN}\left[\frac{1}{2n} + 0.57735(D_{SMIN} - E_{NMAX})\right]$$ Reference(9.)

D_{SMIN} = minimum major diameter of external thread = .6113 in.

E_{NMAX} = maximum pitch diameter of internal thread = .5732 in

L_E = length of engagement = 2.50 (Length of bolt) - 1.25 (max thk. of base plate) = 1.25 inch

$$\frac{A_{S,INTERNAL}}{L_E} = \pi(11)\,(.6113)\left[\frac{1}{2(11)} + 0.57735(.6113 - .5732)\right]$$

$$= 1.425 \text{ in}^2/\text{in}$$

$$A_{S,INTERNAL} = 1.425\ (1.25)$$

$$= 1.781 \text{ in}^2$$

The allowable stress is $0.6\ S_M = 0.6(16,700) = 10,020$ psi

The stripping load is 1.781(10,020) = 17,848 lb. > 8494 lb. preload

Therefore stripping of the threads is not a concern.

From Reference 11, Table 4.1, the thread friction coefficient, k = 0.2. The calculated torque with d = 0.625 inches is:

$$T = Fkd/12 = 88 \text{ lb-ft.}$$

With an uncertainty of 30%, the torque should be limited to 68 lb-ft. The recommended torque is 60 ± 8 lb-ft.

The use of a clamped condition for the attachment of the support rod to the base plate is substantiated by investigating the worst case bending moment occurring during buckling to determine the bolt load induced by the resulting moment around the attachment interface of the rod to base plate. This load is then compared with the co-linear axial force acting at the same time.

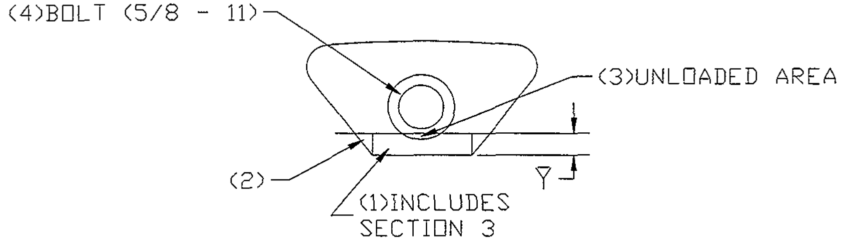

Section	Area	Y	AY	AY^2	I_0
1	0.4027	0.1664	0.0670	0.0111	0.0037
2	0.0762	0.2218	0.0169	0.0037	0.0005
3	-.0097	0.3196	-0.0031	-0.0010	neg
4	0.226	0.6820	0.1541	0.1051	0.0041
$\Sigma\Rightarrow$	**0.6952**	-----	**0.2313**	**0.1141**	**0.0083**

$Y = \Sigma AY / \Sigma A = 0.2313 / 0.6952 = 0.3327$ in.

$I = \Sigma I_0 + \Sigma AY^2 - \Sigma A(Y)^2 = 0.0083 + 0.1141 - (0.6952)(0.3327)^2 = 0.0454$ in^4

The worst case moment point (at the end of the analysis, maximum deflection, where the rod has the greatest curvature, and the axial load is starting to fall), the fixed end moment is 14,922 in-lb.

The bolt load is $P_{BOLT} = Mc/I\ (A_B)$ where c = distance from bolt centerline to neutral axis

$= 14{,}922\ (.682 - .3327)\ /\ 0.0454\ [0.226] = 25{,}918$ lb.

The co-linear axial force, directly downward on the base plate, at this time step is 64,698 lb. Since this is much more than the bolt force, it is clear that the bolt is not necessary to keep the base of the rod “fixed”. The axial buckling load of 64,698 lb against the flat bottom is more than enough to do that. A check of the axial reaction loads of all (40) of the nodes on the bottom face of the rod shows all except three (located on the radial outside of the rod) are pressing down onto the base plate. Therefore, the rod bolt is locational only and no stress analysis in connection with the buckling analysis is required.

8.3 Bottom Plate

The Mark IA bottom plate was evaluated for normal operation and drop accident conditions. As indicated in the following subsection, the bottom plate design is controlled by the vertical drop load event.

8.3.1 Discussion of Bottom Plate Load Conditions

As indicated in Appendix A of the Performance Specification [1], a loaded MCO consists of six Mark IA baskets. The basket bottom plate stresses would be relatively low if the basket support rods are all aligned. However, since the baskets are not indexed to assure support rod alignment, rotational offsets are expected. The maximum bottom plate bending occurs when the support rods are midway between the above basket rods (30° offset). The critical bottom plate is the next-to-the-bottom basket with the bottom basket rotated 30° from the basket above. For this condition, the critical bottom plate rods react to the loading from the four top baskets. This support rod offset produces significant bending stresses in the bottom plate, as demonstrated below.

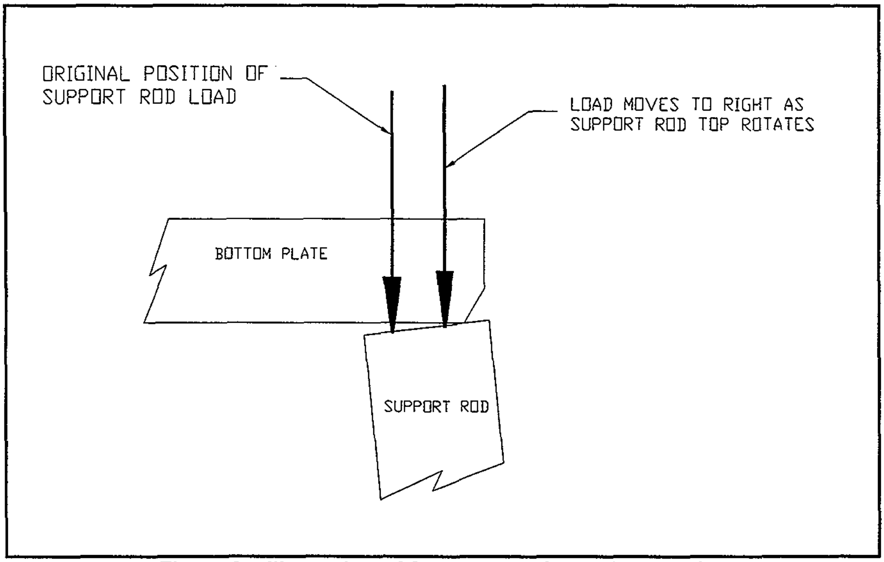

Figure 6: Illustration of Support Rod Load Eccentricity.

The bounding drop loads for the bottom plate are a vertical drop of 35 g's and a horizontal drop of 101 g's. As indicated below, the critical drop for the bottom plate is the 35g vertical drop. Since the drop load stresses are much greater than the normal operation stresses within the MCO, the drop load condition controls the bottom plate design. However, since the boundary conditions and acceptance criteria of the single basket lift condition are much different than for the drop conditions within the MCO, the lifting condition is also addressed to confirm adequacy for this load condition.

8.3.2 ANSYS Models

Two ANSYS models were developed for evaluating the Mark IA Basket bottom plates. The first model generated was a 60° sector model complete with holes, as shown in Figure 7. The mesh refinement necessary to properly define the holes resulted in a relatively large number of elements which ran relatively slow. Note that in both models, shell elements

(SHELL43 and SHELL63) were used to model the center post[1] and bottom plate, while solid elements (SOLID45) were used to model the support rod. The second model generated was a 180° model without holes (Figure 8) and three support rods, one every 60°.

Symmetry boundary conditions (no rotation about a radius line nor displacement in the tangential direction) were used at the zero and 60 degree edges of the first model. For the stacking load condition within the MCO, it was assumed that the supporting basket below was rotated 30°, resulting in the support rods beneath being centered on the edges of the model. The precise bottom plate to support rod contact locations were not known. To address this contact issue, gap elements were placed at the bottom plate/support rod interface.

A 180° degree symmetry model, shown in Figure 8, was developed for the horizontal drop evaluation. The primary purpose of this model is to demonstrate conformance to the two-inch distortion limit on the center post (Section 4.9.3 of the Performance Specification [1]). The bottom plate and center post were modeled using ANSYS SHELL43 elements. The support rods are modeled with beam elements (BEAM4). Note that beam elements were also used at the support rod/bottom plate connection locations to spread the support rod moments over the outlined area of the rod. Although the support rods structural adequacy is not an issue for the horizontal drop, the support rods were modeled to introduce the support rod inertia loads (moments) to the bottom plate. Gap elements (CONTAC52) were used at the drop-side interface with the MCO in order to achieve a reasonable interface load distribution. Since the horizontal drop can be preceded by a vertical drop, rigid links (BEAM4) were used to account for a potential axial reaction offset in the bottom plate occurring during the vertical drop. (An offset of ½ -inch is used, as justified in Sec. 8.3.4.)

---

[1] The model is built assuming a center post made from 6", XXS pipe. The actual center post is made from solid bar with a 1.75 in. diameter hole. In the vertical drop analysis, the center post plays only a negligible role, since the stresses in the bottom plate do not depend on the center post configuration. In the horizontal drop analysis, the use of a pipe in the finite element model is conservative. This is due to the fact that the actual center post, since it is much stiffer than the pipe, will impart a smaller out-of-plane rotation to the bottom plate, thus reducing the stress in the bottom plate. For these reasons, the use of a center pipe configuration in the models is conservative.

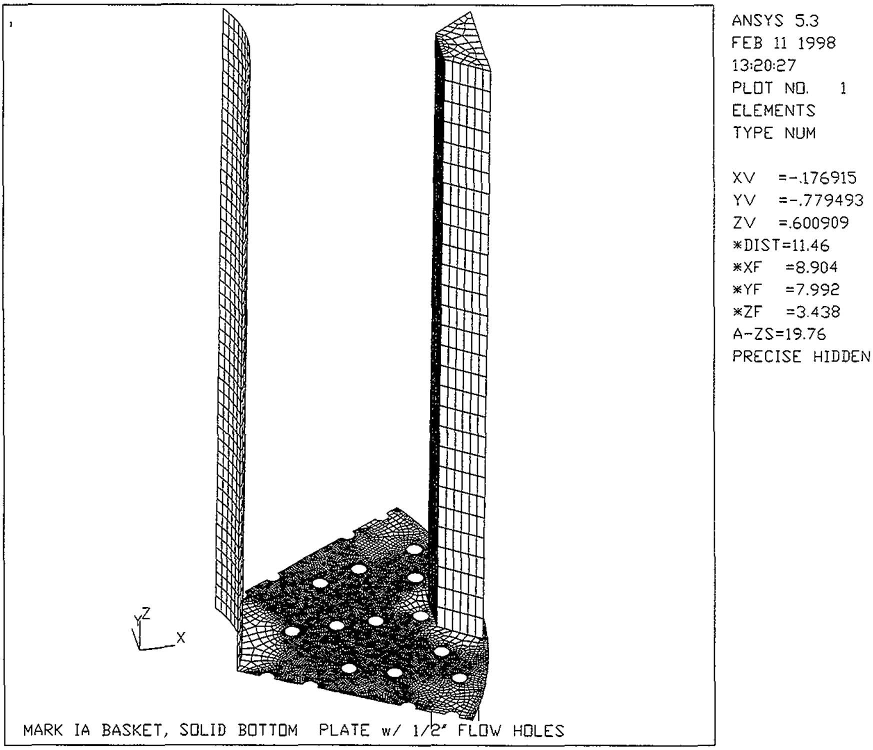

Figure 7: 60 Degree Sector Model of Basket with Holes.

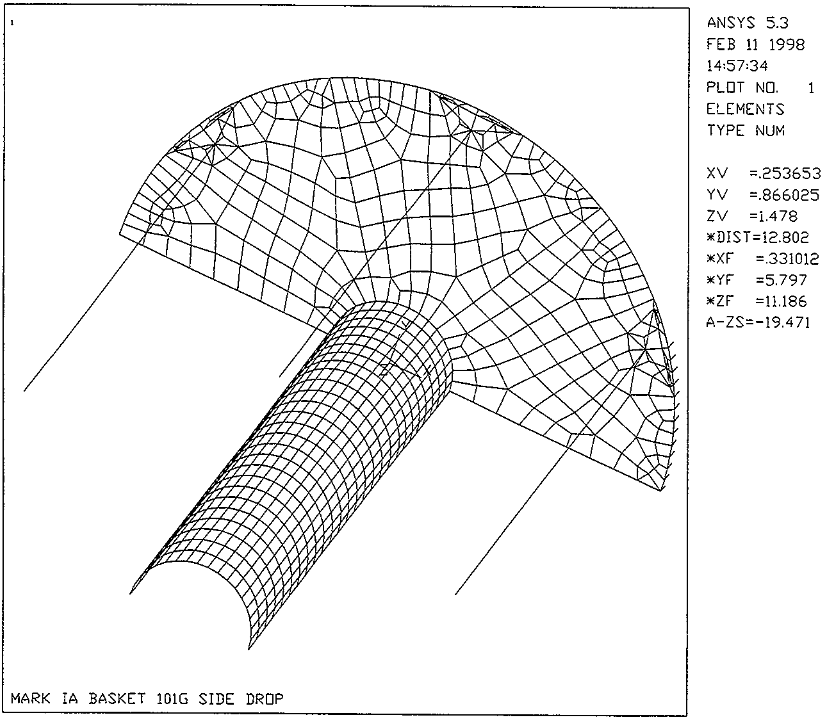

Figure 8: 180 Degree ANSYS Model of Basket Used for Horizontal Drop Analyses.

8.3.3 Vertical Drop Load Condition Evaluation

Using a no-hole model (initially used in Rev. 0 of this package), an initial estimate of the 35g vertical drop stresses was generated. The loading/boundary conditions corresponded to a next-to-the-bottom basket, with four Mark IA baskets above. Prior to the vertical drop analysis, a run was made to estimate the fuel load distribution between the center post and support rods by applying a uniform pressure to the bottom plate to simulate the fuel inertia loading which was reacted through the center post and support rod. As discussed in Section 8.2, under elastic conditions, 58% of the fuel loading is reacted through the support rods and 42% of the fuel loading is reacted through the center post. This support rod/center post load distribution provides a reasonable, and likely conservative, estimate of the support rod loading in the elastic vertical drop analysis described below. See Section 8.2 for a discussion of this load distribution.

From Appendix A of the Performance Specification [1], the loaded Mark IA basket weight is 2153 lb (basket weight = 247 lb, fuel weight = 1906 lb). Subsequent basket design changes have increased the basket weight to approximately 400 lb. (basket weight = 400 lb + fuel weight = 1906, total = 2306 lb.) The change from a center pipe to a center post added approximately 80 lb more, but all of that added weight is carried directly by the relatively stiff center post itself, and does not affect stresses in the bottom plate. Therefore, although the weight has been specified as bounded by 2,400 lb, a weight of 2,300 lb can be used for this analysis without significant loss of accuracy. Using this weight, the 35g, four basket loading is

$$35(2300)(4) = 322{,}000 \text{ lb.}$$

For an elastic drop analysis, it is reasonable to assume that the support rods equally share the support rod portion (58%) of the 322,000 drop load, resulting in a support rod loading for the next-to-the-bottom basket of

$$F_r = 0.58(322{,}000)/6 = 31{,}127 \text{ lb.}$$

The center post load estimate for a 60° sector is

$$F_{cp} = 0.42(322{,}000)/6 = 22{,}540 \text{ lb.}$$

These loads were imposed on the model in Figure 3 the form of pressures on top of the support rod and center post (10,831 psi and 8647 psi, respectively). Vertical constraints were introduced at the bottom of the center post and at the interface with the bottom basket support rods.

Fuel inertia loading on the bottom plate was input as an equivalent pressure, using 39.7 lb/fuel rod per Reference 1, Appendix A:

$$F_f = 48(39.7)(35) = 66{,}696 \text{ lb}$$

$$A_p = [(22.625)^2 - (6.625)^2 - (102(0.51)^2)](\pi/4) = 346.93 \text{ in}^2$$

$$A_r = 2.874(6) = 17.24 \text{ in}^2$$

$$\text{Pres} = F_f/(A_p - A_r) = 202.30 \text{ psi}$$ (Equivalent fuel pressure, plate with 102 - ½ inch holes).

The elastic analysis results are summarized in the Figure 9 stress intensity contour plots. Note that for the elastic analysis, the peak stress intensities are adjacent to the flow holes. These peak stresses are considered very localized and the maximum is 68.6 ksi. Using the results of Figure 9, the maximum plate bending stress of 68.6 ksi compares to an ASME Code, Section III-NG, Level D allowable stress intensity of 60.12 ksi (1.5 x $2.4S_M$ at 132°C), indicating a small overstress for the elastic analysis limits. This elastic overstress was resolved by performing the elastic/plastic analysis described below.

Using the Figure 7 model, an elastic/plastic analysis of the 35g drop was performed, assuming bilinear plasticity (ANSYS files PLTHP.inp and PLTHP.out). the method for developing the bilinear stress-strain curve was obtained from [12], adapted from 304 SS data. Reference [12] indicates the strain hardening coefficient is relatively independent of temperature. A value of 0.16×10^6 psi was obtained from Table B.1 of [12], for a conservative maximum strain of 5%. Since 304 SS and 304L SS are nearly identical materials, it is reasonable to use the same strain hardening coefficient and the 17.8% yield increase.

Using the results of Figure 10, maximum stress intensities of 71.5 ksi (top fiber) and 78.5 ksi (bottom fiber) at the hole adjacent to the support rod were reported. NG-3213.10 classifies a peak stress as a stress "...that does not cause any noticeable distortion...", is "...at a local structural discontinuity..." and is "...highly localized...". The stresses reported (71.5 ksi and 78.5 ksi) are at a local discontinuity (flow hole), highly localized and do not cause any noticeable distortion. Node 495 reports a displacement of 0.0202 inches (node 495 is at the "base" of the localized stress) and nodes 3318, 5622 and 9232, away from the discontinuity have reported displacements of 0.0183, 0.0184 and 0.0196 inches, respectively. Therefore, since the displacements listed are very similar, the reported stresses (71.5 ksi and 78.5 ksi) are classified as peak stresses. Results listed in Table 6, for the top and bottom fiber of the bottom plate, reflects stresses away from the discontinuity (away means about 1 (or 2) radius length(s) from the hole).

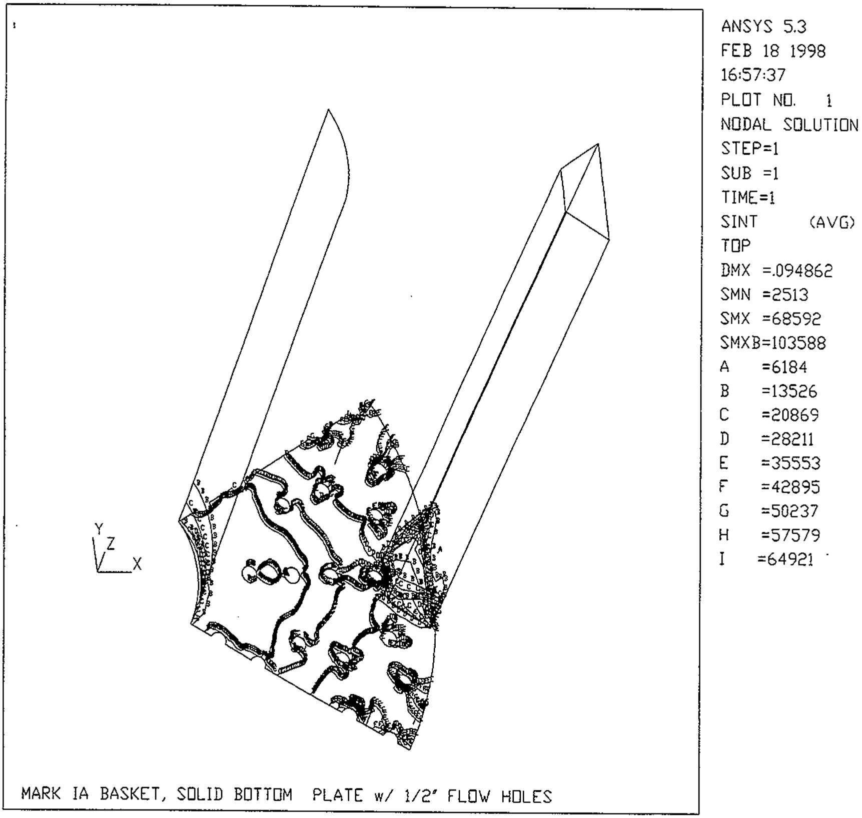

Figure 9: Elastic Stress Intensity Contours, 35g Drop Loading, Detailed Hole Model.

REVISION	0	1	2		PAGE 36 OF 77
PREPARED BY / DATE	BW 4/17/97	ZGS 7/14/98	ZGS 02/08/99		
CHECKED BY / DATE	JN 4/17/97	HAS 7/14/98	HAS 02/08/99		

The vertical drop stress intensity contours are shown in Figure 9. A tabular summary of the membrane and membrane plus bending results are provided in Table 6. Note that all predicted stress intensities ratios are less than one, indicating that the results are within ASME Code allowables.

Table 6: Vertical Drop Stress Intensity Results Summary.

Component		Stress Category	Stress Intensities, ksi		Ratio
			Maximum	Allowable	
Bottom Plate	Middle	Pm (0.7S$_u$)	14.1	43.8	0.32
	Top	Pm + Pb (0.9S$_u$)	33.4	56.3	0.59
	Bottom	Pm + Pb (0.9S$_u$)	36.7	56.3	0.65
Center Post	Middle	Pm (0.7S$_u$)	13.5	43.8	0.31
	Top	Pm + Pb (0.9S$_u$)	30.5	56.3	0.54
	Bottom	Pm + Pb (0.9S$_u$)	16.1	56.3	0.29

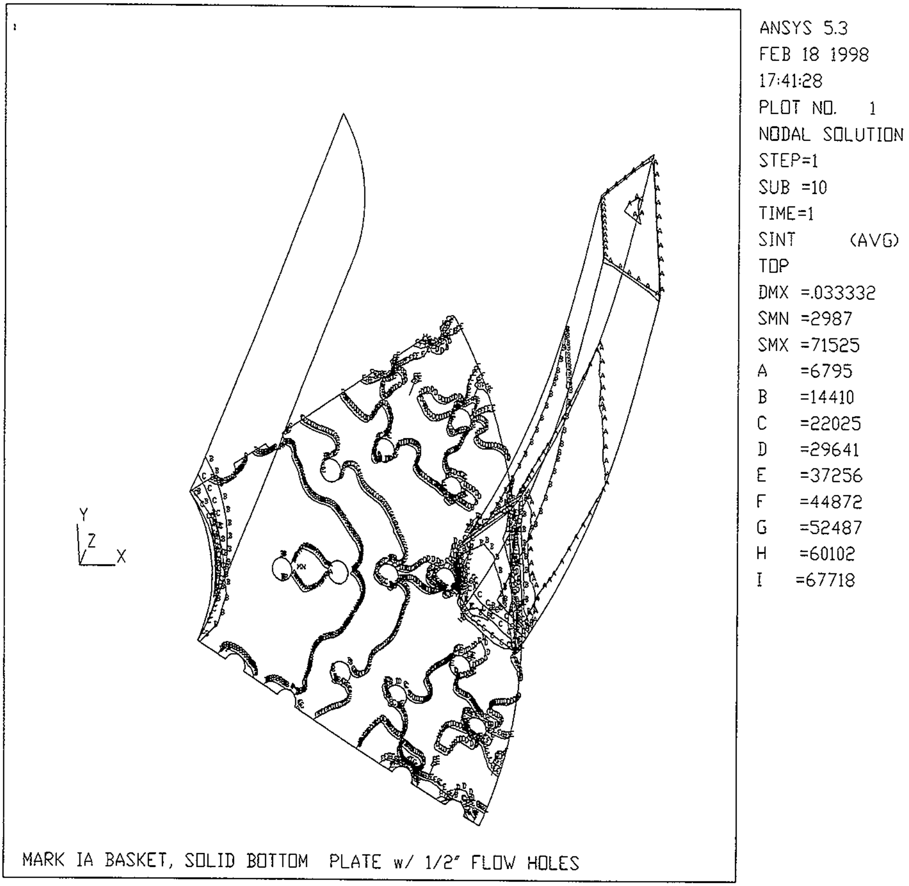

Figure 10: Elastic/Plastic Stress Intensity Contours, 35g Vertical Drop

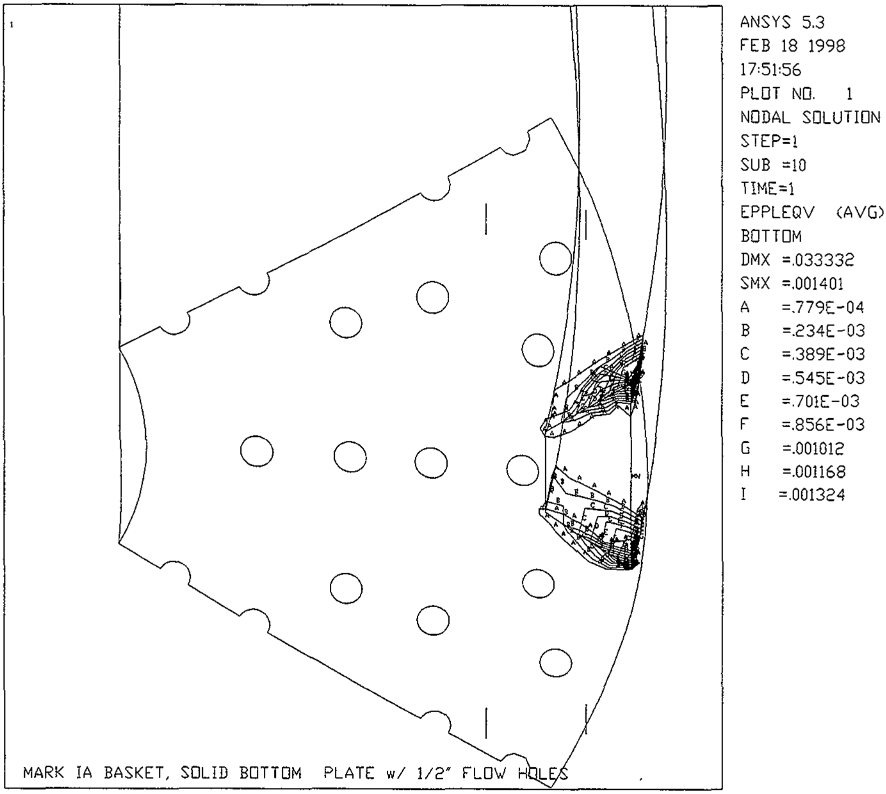

Figure 11: Plastic Strain Contours, 35g Vertical Drop

The plastic strain contours are shown in Figure 11. Note that a maximum plastic strain of 0.1% was predicted, which is well below the 5% assumed for the strain hardening coefficient selection above. Also, note that a maximum displacement of 0.033 in. was predicted. This maximum displacement occurs in the vertical direction and occurs in the plate below the support rod. The bottom plate distortion is of interest because of the potential for a horizontal drop following a vertical drop. As indicated in Section 8.3.1, this maximum plate distortion was considered in the horizontal drop evaluation. (Section 8.3.4)

8.3.4 Horizontal Drop Analysis

Using the 180° model shown in Figure 8, an elastic/plastic analysis was performed for the 101g horizontal drop load condition. The plastic analysis option was selected for two reasons; (1) an initial elastic analysis predicted local stresses which exceeded the elastic allowables, (2) total transverse distortion (elastic plus plastic) predictions were needed to demonstrate conformance to the Reference 1, Section 4.19.3, nuclear criticality safety requirement that the "void space centerline shall not deviate more than two inches from the MCO centerline".

As indicated by the small elements on the right side (impact side) of the Figure 8 model, line elements (BEAM4) were used to account for the potential offset associated with bottom plate plastic distortions occurring during a preceding vertical drop. Note from Figure 12, that offset from the bottom plate centerline can also be affected by the bottom plate edge contact. Although the vertical drop distortion was less than 0.1 inch, an offset of 0.5" was conservatively assumed. Although the actual offset would be limited to a small area (near a support rod), a uniform offset was conservatively assumed.

Gap elements (ANSYS CONTAC52) were used to account for the circumferentially varying gap between the outside of the bottom plate and the inside of the MCO (3/8" diameter difference). The potential for a basket instability (elastic/plastic buckling) was included in the ANSYS run by activating the large deflection/strain option (NLGEOM,ON command). The g loading was increased to 1.5 times the specified drop loading of 101 g's to assure that the ASME Level D buckling requirements are met (Para. F-1331.5(a), loading < 2/3 buckling capacity). An earlier elastic buckling analysis, with no bottom plate offset, indicated that the elastic buckling strength was in excess of 1000 g's (stress > yield), which indicates that the actual buckling failure mode is inelastic.

The nonlinear results for the horizontal drop evaluation are summarized in Figure 13. The ANSYS input and output files are contained in the attached disk (Hdrop.inp and Hdrop.out). Note, in Figure 13, that a maximum stress intensity of 32.1 ksi was predicted for the top side of the bottom plate. The corresponding maximums for the shell middle and bottom surfaces are 18.6 and 31.1 ksi, respectively. Since the maximum surface stress intensity is more than 50% higher than the mid-surface results, membrane plus bending stress intensity is the critical value for the horizontal drop. From Table 5, the allowable membrane plus bending stress intensity (plastic analysis) is 56.3 ksi, resulting in a ratio of

$$\text{Ratio} = 32.1/56.3 = 0.570$$

As indicated, a g loading of 1.5 times the 101g drop loading (151.5 g's) does not result in an unstable response. Thus, the ASME Level D requirement (load < 2/3 buckling strength) is met.

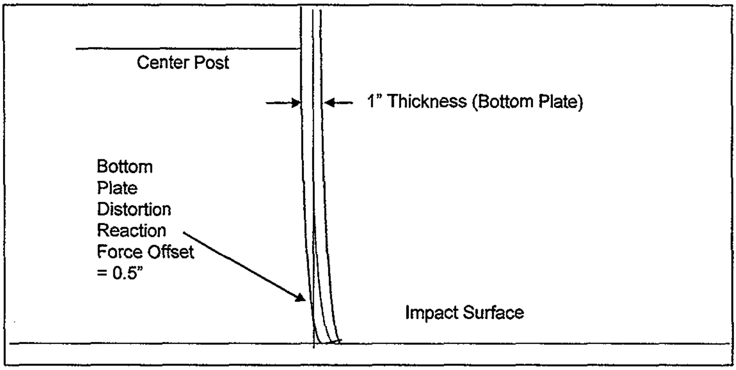

Figure 12: Bottom Plate Distortion Illustration for Horizontal Drop Modeling.

A criticality control limit in Section 4.19.3 of the Performance Specification [1], specifies that the center post cannot deviate from the MCO centerline by more than 2.00 in. From Figure 13, a maximum horizontal drop displacement of 0.51 in. is indicated in the figure legend (101g loading). This maximum displacement occurs at the top of a support rod, which has no criticality concern. From Figure 13, the maximum displacement in the bottom plate is only 0.08 in. for a 101 g loading. Combining this value with the 3/16-in. radial displacement due to the basket O.D./MCO I.D. difference results in a deviation of 0.268 in. The resulting allowable ratio is

$$\text{Ratio} = 0.268/2.00 = 0.134$$

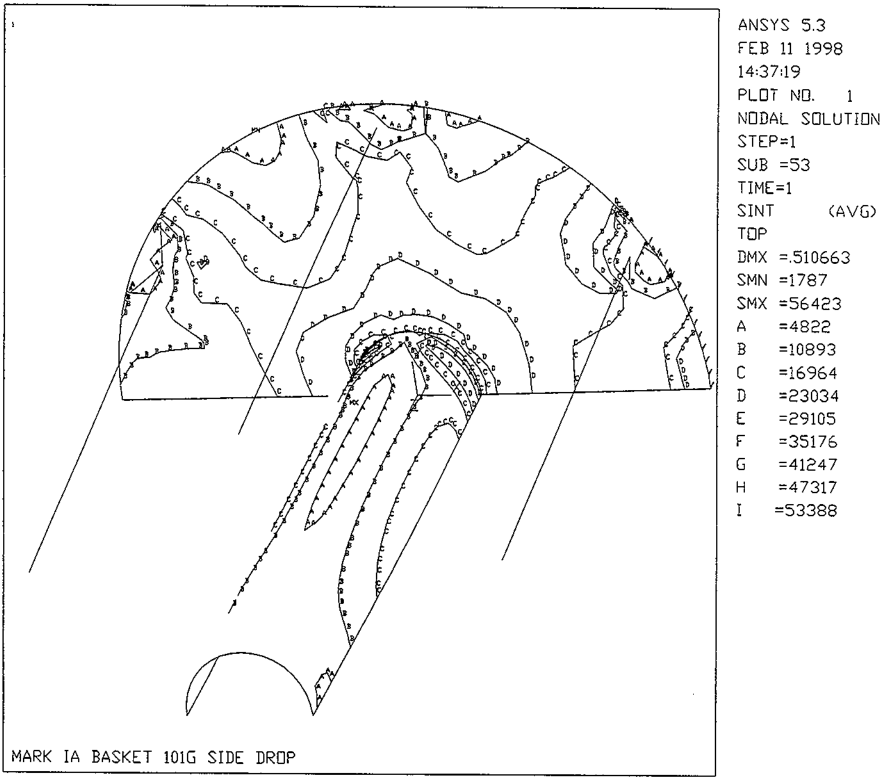

Figure 13: 101g Horizontal Drop Stress Intensity Contours, Inelastic Analysis

8.4 Scrap Basket Shroud

The scrap basket shroud extends the full height of the basket and is used to contain the scrap pieces. The scrap pieces vary in size and shape, and the resulting pressure will vary significantly. A reasonable estimate of the scrap pressure can be obtained by considering wall pressures associated with angular rock (limestone, iron ore, etc.). The scrap pressure during drop loading was not considered, since it is assumed that the drop loading scrap pressure is carried by the MCO wall (see Appendix 5). The following evaluation of the wall pressure and corresponding structural evaluation of the shroud was performed:

Assume that the scrap weight is equal to 48 fuel assemblies @ 39.7 lb.

$W_S = 48 \times 39.7$ lb. $= 1906$ lb.

$h_S = 21.50$ inches Shroud Height

$d_S = 22.625$ inches Shroud Outside Diameter

$t_S = 0.125$ inches Shroud Nominal Thickness

$$V_s := \pi \frac{\left(d_s\right)^2 - \left(68.213\ \mathrm{in}^2\right)\cdot\left(h_s\right)}{4} = 7177\ \mathrm{in}^3$$ Scrap Volume

$$\delta_s := \frac{W_s}{V_s} = 0.266\ \mathrm{lb/in}^3$$ Scrap Weight Density

$S_Y = 7.65$ ksi Copper yield strength @ 132°C [8.4.1]

Assuming a reasonable equivalent fluid pressure coefficient:

$\phi = 33^\circ$ The minimum of Iron ore/coal/lime angle of repose with 2 degrees uncertainty, Bowles (Ref 10), Table 11-8

$$K_a = \frac{1-\sqrt{1-\cos(\phi)^2}}{1+\sqrt{1-\cos(\phi)^2}}$$ Bowles, Eq. 11-7a, Rankine Pres. Coef.

$K_a = 0.295$ Use 0.3 as reasonable estimate of pressure coefficient

$K_a = 0.3$

$$P_{Base} := K_a \left(\delta_s\right)\left(h_s\right) = 1.713\ \mathrm{lb/in}^2$$

Check maximum membrane pressure stress in the shroud (lifting load condition):

$$P_m := \frac{P_{Base}\left(d_s\right)}{2\ t_s} = 155\ \text{lb/in}^2$$

$$\text{Ratio} := \frac{P_m}{\frac{S_y}{3}} = 0.061$$

Therefore all hoop connections (welding, brazing or mechanical) performed on the shroud must have a minimum strength equivalent to that of the calculated maximum membrane pressure stress calculated above.

8.4.1 Evaluation of Shroud to Bottom plate Attachment

Per item 8 of [14], "the copper subassembly of the scrap basket shall be designed to withstand a distributed load in tension on the outside shroud of 10,350 lb before yielding and 17,250 lb before failure. This provides a safety factor of three to yield and five to failure during loading of the basket into the MCO".

From [3], the maximum allowable stress is 5.2 ksi at 250°F and 5.1 ksi at 300°F. Using linear interpolation, the maximum allowable stress at 270°F is 5.13 ksi. Using this in relation to the allowable stress at room temperature of 6.70 ksi with the yield criteria governing, the yield stress at room temperature is 10 ksi; therefore, the yield stress at 270°F (132°C) is:

$$S_Y = \frac{5.13}{6.70}(10) = 7.65\ \text{ksi}$$

The screw specified is a self-tapping flat head #10, Type AB (square drive, 18-8 stainless steel material). The minimum head diameter is 0.389 inches at the end of the head and 0.172 inches in diameter at the inside of the shroud (i.e., at 0.125 from the flat surface of the screw head). The average head diameter bearing in the copper shroud is:

$$\text{Average head diameter} = \frac{0.389 + 0.172}{2} = 0.281\ \text{inches}$$

Limiting the bearing stress in the copper to yield, the allowable load when yielding occurs is:

$$P_{BEARING} = (F_Y)(\text{Area}_{BEARING}) = 7{,}650(0.281)(0.125) = 269\ \text{lb/screw}$$

Checking the shear-out failure along sections at 40° from the loading direction:

$$P_{SHEAR\text{-}OUT} = \text{(Shear Allowable Stress)(2T)[edge margin - (D/2)Cos40°)]}$$

at an edge margin of 0.50 in.:

$$P_{SHEAR\text{-}OUT} = (0.6)(7{,}650)(2)(0.125)[0.5 - (0.389/2)0.766]$$

$$= 403 \text{ lb/screw at 0.50 in. edge margin, shear-out will not occur.}$$

Next, check the shear failure of the screw. The diameter of the screw is 0.164/0.157 inches. The minimum allowable stress for 18-8 bolting per the Code is 7.74 ksi (at 270°F).

$$\text{Shear allowable of screw} = 0.6(2S_M)\text{(Shear Area)}$$

$$= 0.6(2)(7{,}740)(\pi/4)(0.157)^2 = 180 \text{ lb/screw}$$

Therefore, the shear stress in the screw governs the strength of the attachment screws. With 10 screws per segment, the stress ratio is

$$\text{Ratio} = \frac{10{,}350/6}{10(180)} = 0.96$$

8.5 Thermal Expansion

As stated above, the shroud, divider plates and fines divider tube are fabricated out of copper and the bottom plate out of type 304L stainless steel. Since copper has a higher coefficient of thermal expansion than stainless steel, a thermal expansion analysis must be performed. An evaluation is performed for a temperature difference of 200°F (going from 70°F to 270°F). This thermal expansion analysis is provided for information and operational duties since the copper components are non structural items.

8.5.1 Vertical Expansion

<u>For the stainless steel plate :</u>

$\alpha_{ss} = 8.94 \times 10^{-6}$ in/in/°F	Stainless steel coefficient of thermal expansion
$\Delta T = 200$°F	Temperature differential
$L_{ss} = 1.25$ inches	Bottom plate height
$\Delta L_{ss} = \alpha_{ss} L_{ss} \Delta T = 0.002$ in.	Vertical Expansion of bottom plate

<u>For the copper shroud:</u>

$\alpha_{cu} = 10.0 \times 10^{-6}$ in/in/°F	Copper coefficient of thermal expansion
$\Delta T = 200°F$	Temperature differential
$L_{cu} = 21.5$ inches	Shroud height
$\Delta L_{cu} = \alpha_{cu} L_{cu} \Delta T = 0.043$ in.	Vertical Expansion of copper shroud

Therefore, the total vertical thermal expansion for the stainless steel and the copper at the circumference of the basket is:

$$\Delta L = \Delta L_{cu} + \Delta L_{ss} = 0.045 \text{ inches}$$

The stainless steel post has a vertical thermal growth of

$L_{cp} = 23.2$ inches

$\Delta L_{cp} = \alpha_{ss} L_{cp} \Delta T = 0.041$ inches

One can conclude that there is no significant differential expansion between the center post and the shroud. Therefore, the one inch vertical gap left for the center post expansion is adequate to ensure no interference fit between the shroud and the bottom plates of the adjacent baskets.

8.5.2 Radial Expansion

For the stainless steel plate :

$\alpha_{ss} = 8.94 \times 10^{-6}$ in/in/°F	Stainless steel coefficient of thermal expansion
$\Delta T = 200°F$	Temperature differential
$R_{plate} = 11.31$ inches	Bottom plate outside radius
$\Delta L_{ss} = \alpha_{ss} D_{plate} \Delta T = 0.020$ in.	Radial expansion of bottom plate

For the copper shroud:

$\alpha_{cu} = 10.0 \times 10^{-6}$ in/in/°F	Copper coefficient of thermal expansion
$\Delta T = 200°F$	Temperature differential
$R_{shroud} = 11.31$ inches	Shroud outside radius
$\Delta L_{cu} = \alpha_{cu} R_{shroud} \Delta T = 0.023$ in.	Radial Expansion of copper shroud

The copper shroud is expected to expand radially 0.023 inches while the stainless steel MCO shell and basket bottom plate are expected to expand by approximately 0.020 inches. As these values are very comparable, the fabrication gaps will remain open and no undetermined loads will be applied to the MCO shell from unexpected basket expansion loads.

8.6 Summary

From the calculations above, a summary of the component stress analysis results was compiled into Table 7. Note that the predicted maximums are below allowables for all components and conditions.

Table 7: Summary of Mark 1A Storage Basket Stress Results

Componen t	Critical Load Condition	Stress Category	Predicted Maximum	Allowable	Ratio
Center Post/Bottom Plate Threaded Coupling	Lifting	Shear	334 psi	7,010(0.6) psi	0.079
Center Post Capacity	35g Vertical Drop	Buckling	420,000 lb	536,400 lb	0.783
Center Post/Bottom Plate Threaded Coupling	101g Horiz. Drop	Shear	12,536 psi	26,300 psi	0.477
Center Post/Bottom Plate Threaded Coupling	101g Horiz. Drop	Pm + Pb	17,740 psi	60,100 psi	0.295
Center Coupling	101g Horiz. Drop	Shear	6,640 psi	26,250 psi	0.253
Center Coupling	Lifting	Pm	993 psi	7,010 psi	0.142
Support Rod	35g Vertical Drop	Buckling	243,600 lb	262,500 lb	0.928
Bottom Plate	35g Vertical Drop	Pm	14,100 psi	43,800 psi	0.322
Bottom Plate	101 g Horiz. Drop	Pm + Pb	32,100 psi	56,300 psi	0.570
Center Post Criticality Control	Sequential 35g Vertical & 101g Horiz. Drops	Plastic Distortion & Potential Instability	0.268 in. radial displacement	2.00 in.	0.134
Support Plate	Sequential 27g Vertical & 101g Horiz. Drops	Buckling	13,180 psi	16,230 psi	0.812
Support Plate Weld	Sequential 27g Vertical & 101g Horiz. Drops	Pm	12,450 psi	16,040 psi	0.776

9. BASKET/MCO INTERFACE COMPONENTS

An important issue in the Section 8.3.4 horizontal drop evaluation is the assumption that the top end of each Mark 1A basket (center post) remains inside, i.e. overlaps, the mating component during the drop. This assumption is vital to the horizontal drop calculations because the finite element analysis assumed a transverse support for the top end of the center post. Also, Section 4.19.3 of the Performance Specification [1] (criticality control) requires that the center post cannot deviate by more than two inches from the MCO centerline. This section provides justification for the assumption that the Mark 1A baskets will not come apart at the interfaces.

The basket/MCO interfaces were designed to assure that, during normal operations, the center coupling maintains at least a one-inch overlap with the shield plug assembly. During a vertical drop, if the "MCO Basket Support Plates" (Drawing No. H-2-828053) collapse, the center coupling overlap may be lost. Therefore, the basket support plates were evaluated to assure that the ASME Code Level D axial compression limits are met for a vertical drop. The evaluation follows below:

Support Plate Dimensions (six radial spokes @ 60 deg. intervals):

$t_p = 0.50$ in.	Support Plate Width
$l_p = 9.83$ in.	Support Plate Length
$h_p = 1.49$ in.	Support Plate Height

Per inch length of plate:

$$I = \frac{(1)(t_p)^3}{12} = 0.01 \text{ in}^4$$

$$r = \sqrt{\frac{I}{(1)(t_p)}} = 0.144 \text{ in}$$

$K = 2.1$	Effective Length, Fixed/free [11]
$S_Y = 19{,}800$ psi	304L Yield Stress at Maximum Drop Temperature of 132°C
$E = 27.2 \times 10^6$ psi	304L Modulus at 132°C

ASME F-1334.3 Axial Compression Evaluation:

$$\lambda = \left(\frac{Kh_p}{r}\right)\left(\frac{1}{\pi}\right)\left(\sqrt{\frac{S_y}{E}}\right) = 0.186$$

$0 < \lambda < 1$ then 1st Equation Applies

$$\sigma_{ALLOW} = (S_Y)\frac{1-\frac{\lambda^2}{4}}{1.11+0.50\lambda+0.17\lambda^2-0.28\lambda^3} = 16.23(10^3)\text{ psi}$$

The maximum vertical g level for a sequential drop is 27 g's

$W_b = 2{,}400$ lb Basket Weight

$$\sigma = \frac{6W_b(27)}{6t_p l_p} = 13.18(10^3)\text{ psi}$$

$$\text{Ratio} = \frac{\sigma}{\sigma_{ALLOW}} = 0.812$$

Since the safety margin is small, it is noted that the results are conservative in that no credit is taken for either the vertical weld on the inside end of the plate or the lateral resistance for friction.

The support plate welds are evaluated as follows:

$F_P = \sigma\, t_p = 6.59 \times 10^3$ psi Support Plate Drop Loading/Inch

Assume a maximum load offset = ½ of plate thickness

$$M_P = F_P \frac{t_P}{2} = 1.65(10^3)\text{ in}-\text{lb/in}$$

The 3/8 in. weld stress in the throat is

$$\sigma_W = \frac{M_P}{t_p \frac{\sqrt{2}}{2}\frac{3}{8}} = 12.45(10^3)\text{ psi}$$

The allowable weld stress is based on the base metal allowable, or from Table 5, $2.4S_m$ = 40.1 ksi. From Table NG-3352 [4], the weld quality factor for a double fillet weld is 0.4, so that the weld allowable is A_w = (40.1)(0.4) = 16.04 ksi. The stress ratio is:

$$\text{Ratio} = \frac{\sigma_W}{16{,}040} = 0.776$$

Thus, the basket support plates and attachment welds meet the ASME Level D compression load requirements, and the overlapping (telescoping) of the baskets is not jeopardized.

At the top end of the basket stack, the basket interfaces with the bottom of the shield plug assembly (specifically, the basket stabilizer, shield ring, and shield plate, part nos. 21, 15, and 14 of Drawing H-2-828041). For a top end drop, the basket loading would be reacted by the one-inch thick shield ring (area = 67.5 in^2) and the basket stabilizer. The shield ring area alone is more than double the bottom basket interface support plate area. Thus, the top axial support is adequate by comparison to the bottom basket interface.

For a horizontal drop, the top basket relies upon the shield plate for transverse support. For normal conditions, the shield plate position is maintained through a weld connection to the shield ring which in turn is welded to the shield plug. If either or both of these welds should fail during a horizontal drop, the shield plate would be captured between the top basket and shield plug and would continue to support the top end of the basket. Therefore, the maximum center post movement would be the 0.25-inch difference between the inside radius of the MCO and the outside radius of the shield ring, which is well below the two-inch Performance Specification limit (Reference [1], Section 4.19.3).

APPENDIX A

COMPUTER RUN OUTPUT SHEETS

AND

INPUT FILE LISTINGS

PARSONS

CLIENT: DE&S Hanford **FILE NO:** KH-8009-8-05

PROJECT: MCO Design **DOC. NO.:** HNF-SD-SNF-DR-003, Rev. 2, Appendix 7

COMPUTER RUN COVER SHEET

Project Number:	KH-8009-8
Computer Code:	ANSYS®-PC
Software Version:	5.3
Computer System:	Windows 95, Pentium® Processor
Computer Run File Number:	KH-8009-8-05
Unique Computer Run File Name:	Plth.inp
Run Description:	Elastic Drop Analysis of the Mark IA Storage Basket, Holes in Bottom Plate
Creation Date/Time:	16 February 1998 / 12:16:46 pm

Zachary G.Sargent 2/19/98

Prepared By: Zachary G. Sargent Date

Henry Averette 2/19/98

Checked By: Henry Averette Date

REVISION	0	1	2		PAGE 52 OF 77
PREPARED BY / DATE	BW 4/17/97	ZGS 7/14/98	ZGS 02/08/99		
CHECKED BY / DATE	JN 4/17/97	HAS 7/14/98	HS 02/08/99		

LISTING OF PLTH.INP FILE

```
/BATCH,LIST
/FILENAM,PLTH
/PREP7
/TITLE, MARK IA BASKET, SOLID BOTTOM  PLATE w/ 1/2" FLOW HOLES

SIZE = 0.08             ! Element Size
PRESSURE = -202.30              ! Uniform Pressure Load (35G Fuel Press.)
OR2 = 22.519/2                  ! Plate Outside Radius At Shroud Cutout
IR = 6.625/2            ! Plate INSIDE Radius
RR = 21.15/2            ! Support Rod Location Radius
HICP = 23.182           ! Height Of Center Pipe
HIR = 21.977            ! Height Of  Support Rods
RHOLE = 0.51/2          ! Radius Of Flow Hole
THICK1 = 0.864                  ! Center Pipe Thickness
THICK2=1.200                    ! Plate Thickness

ET,1,SHELL63            ! Center Pipe
ET,2,SHELL63                    ! Plate
ET,3,SOLID45                    ! Support Rod
ET,4,CONTAC52

R,1,THICK1
R,2,THICK2
R,4,1E6,0,2

DENS,1,.2854
EX,1,26.5E+06
NUXY,1,.3

DENS,2,.2854
EX,2,26.5E+06
NUXY,2,.3


/COM **** DEFINING KEYPOINTS FOR PLATE GEOMETRY ****
/COM **** STARTING WITH 30 DEGREES ****
CSYS,1                          ! Cylindrical Coordinates
K,1,0,0                         ! Center of Plate
K,2,IR,0
K,3,OR2,0
K,4,9.6792,26
K,5,11.1057,22
K,6,OR2,30
K,7,11.001,0            ! Support Rod (1/2 Geometry)
K,8,9.660,0
K,9,9.6792,4
K,10,11.1057,8          ! End Support Rod
K,11,IR,30
K,12,9.66,30
K,13,11.001,30

L,2,8                   ! Line 1
L,7,3                   ! Line 2
```

```
L,8,7                   ! Line 3
LESIZE,3,,,6
L,12,11                         ! Line 4
CSYS,0
L,8,9                   ! Line 5
LESIZE,5,,,5
L,9,10                          ! Line 6
LESIZE,6,,,6
L,10,7                          ! Line 7
LESIZE,7,,,5
CSYS,1
LARC,11,2,1,IR                  ! Line 8 — Arc at Inside Plate (for Pipe)
LESIZE,8,,5             ! 5 Degree Segments for Inside Arc
LARC,6,3,1,OR2                  ! Line 9 — Inside Arc at Shroud Cutout

/COM **** DEFINING CENTER PIPE ****
K,20,0,0,HICP
K,21,IR,0,HICP
K,25,IR,30,HICP
LARC,25,21,20,IR        ! Line 10
LESIZE,10,,5            ! 5 Degree Segments for Inside Arc
L,2,21                          ! Vertical Line 11 at 0 Degrees
L,11,25                         ! Vertical Line 12 at 30 Degrees
CSYS,0
L,6,13                          ! Line 13
L,13,12                         ! Line 14 - Start Outline Bottom support Rods
LESIZE,14,,,10
L,12,4                          ! Line 15
LESIZE,15,,,10
L,4,5                   ! Line 16
LESIZE,16,,,10
L,5,13                          ! Line 17 - End Outline Bottom Support Rods
LESIZE,17,,,10
CSYS,1

/COM **** DEFINING AREAS ****
AL,1,5,6,7,2,9,13,14,4,8        ! Area 1

/COM **** DEFINING AREA FOR CENTER PIPE ****
AL,8,11,10,12           ! Area 2

/COM **** DEFINING SUPPORT ROD AREA ****
AL,3,5,6,7              ! Area 3
AL,14,15,16,17                  ! Area 4

/COM **** DEFINING HOLES IN BOTTOM PLATE ****
BOPTN,KEEP,YES

YH=0
WPLANE,,5.08,YH                 ! Area 5
PCIRC,RHOLE
WPLANE,,6.54,YH                 ! Area 6
PCIRC,RHOLE
WPLANE,,7.83,YH                 ! Area 7
PCIR,RHOLE
WPLANE,,9.29,YH                 ! Area 8
```

```
PCIRC,RHOLE

WPLANE,,9.5394,1.9668          ! Area 9
PCIRC,RHOLE
WPLANE,,6.4725,2.2426          ! Area 10
PCIRC,RHOLE
WPLANE,,7.8615,2.7238          ! Area 11
PCIRC,RHOLE

WPLANE,,9.8269,3.4048          ! Area 12
PCIRC,RHOLE

WPLANE,,3.7586,2.170           ! Area 13

 PCIRC,RHOLE
WPLANE,,5.0316,2.905           ! Area 14
PCIRC,RHOLE
WPLANE,,7.8808,4.55       ! Area 15
PCIRC,RHOLE
WPLANE,,9.1539,5.285           ! Area 16
PCIRC,RHOLE

APLOT,ALL


/COM **** DELETE HOLES FROM PLATE ****
ASBA,1,5              ! Area 5 from Area 1 to give Area 17
ASBA,17,6
ASBA,18,7
ASBA,19,8
ASBA,20,9
ASBA,21,10
ASBA,22,11
ASBA,23,12
ASBA,24,13
ASBA,25,14
ASBA,26,15
ASBA,4,16

/COM **** DELETE UNUSED AREAS ****
ADELE,1
ADELE,5,26

/COM **** REPEAT MESH TO OBTAIN 60 DEGREE PATTERN & MERGE NODES ****
CLOCAL,11,,,,30
ALLS
ARSYM,Y,ALL

/COM **** ADDING & DELETING MORE AREAS ****
ASBA,7,6
ADELE,6,7
ASBA,27,4
ADELE,4
ADELE,27

/COM **** MERGE AND MESH AREAS ****
```

```
NUMMRG,ALL
AADD,3,5                ! Add Areas 3 & 5 to Give Area 4 (Support Rod Area)
ADELE,3,5,2
AADD,6,9                ! Add Areas 6 & 9 to Give Area 3 (Bottom Plate Area)
ADELE,6,9,3
ESIZE,SIZE
REAL,2
AMESH,3                 ! Mesh Bottom Plate Area
ESIZE,SIZE*3
AMESH,8
AMESH,28
TYPE,1
REAL,1
ESIZE,SIZE*6
AMESH,1,2               ! Mesh Center Pipe Area
AMESH,4                 ! Mesh Support Rod Area

/COM **** EXTRUDE SUPPORT ROD ****
TYPE,3
ESIZE,,28
VEXT,4,,,,,HIR
NUMMRG,NODE

/COM **** ADDING GAP ELEMENTS BENEATH SUPPORT RODS ****
CSYS,0
N,20307,10.297,4.1603,-1.200            ! Nodes At 4 Corners of Underside Rods
N,20317,8.6996,4.2431,-1.200            ! 2 Nodes At Each Inside Corner
N,20121,8.6996,-4.2431,-1.200
N,20131,10.297,-4.1603,-1.200
D,20307,ALL                             ! Constraining The Nodes
D,20317,ALL
D,20121,ALL
D,20131,ALL

TYPE,4                                         ! Contact52 Gap Elements
REAL,4
E,20307,307
E,20317,317
E,20121,121
E,20131,131

/COM **** CONSTRAINT EDGES OF THE PLATE ****
CSYS,1
NROTAT,ALL
NSEL,S,LOC,Y,29.9,30.1
D,ALL,UY,,,,,ROTX,ROTZ
NSEL,ALL
CSYS,1
NROTAT,ALL
NSEL,S,LOC,Y,329.9,330.1
D,ALL,UY,,,,,ROTX,ROTZ
NSEL,ALL
/COM **** APPLYING AXIAL CONSTRAINT TO EDGE OF PLATE AT PIPE ****
NSEL,S,LOC,Z,0
NSEL,R,LOC,X,IR
D,ALL,UZ
```

```
NSEL,ALL

/COM **** FUEL LOADING (PRESSURE) & ACCELERATION ****
ASEL,S,LOC,Z,0                 ! Selecting Bottom Plate
ASEL,U,AREA,,4                 ! Unselecting Support Rod Area
NSLA,S,1                       ! Select All Nodes Associated with Selected Area
SF,ALL,PRES,PRESSURE           ! Apply Pressure On Bottom Plate
ASEL,ALL
NALL
NSEL,S,LOC,Z,HIR               ! Select Support Rod Top Area
NSEL,R,LOC,X,8.5,15
SF,ALL,PRES,10831              ! 10831 Psi Pressure
NALL
NSEL,S,LOC,Z,HICP              ! Select Center Pipe Top Area
NSEL,R,LOC,X,0,7
SF,ALL,PRES,8647               ! 8647 Psi Pressure
NALL
SAVE
FINI

/COM **** SOLUTION AND 35g ACCELERATION ****
/SOLU
ACEL,,,-35
SOLVE
SAVE
FINI
```

PARSONS

CLIENT: DE&S Hanford **FILE NO:** KH-8009-8-05

PROJECT: MCO Design **DOC. NO.:** HNF-SD-SNF-DR-003, Rev. 2, Appendix 7

COMPUTER RUN COVER SHEET

Project Number:	KH-8009-8
Computer Code:	ANSYS®-PC
Software Version:	5.3
Computer System:	Windows 95, Pentium® Processor
Computer Run File Number:	KH-8009-8-05
Unique Computer Run File Name:	Plth.out
Run Description:	Elastic Drop Analysis of the Mark IA Storage Basket, Holes in Bottom Plate
Run Date/Time:	12 February 1998 / 4:34:10 am

Zachary G. Sargent 2/19/98

Prepared By: Zachary G. Sargent Date

Henry Averette 2/19/98

Checked By: Henry Averette Date

REVISION	**0**	**1**	**2**		**PAGE 58**
PREPARED BY / DATE	BW 4/17/97	ZGS 7/14/98	02/08/99		**OF 77**
CHECKED BY / DATE	JN 4/17/97	HAS 7/14/98	02/08/99		

COMPUTER RUN COVER SHEET

Project Number:	KH-8009-8
Computer Code:	ANSYS®-PC
Software Version:	5.3
Computer System:	Windows 95, Pentium® Processor
Computer Run File Number:	KH-8009-8-05
Unique Computer Run File Name:	Plthp.inp
Run Description:	Elastic/Plastic Vertical Drop Analysis of the Mark IA Storage Basket
Creation Date/Time:	12 February 1998 / 8:30:52 am

Zachary G. Sargent 2/19/98

Prepared By: Zachary G. Sargent Date

Henry Averette 2/19/98

Checked By: Henry Averette Date

LISTING OF PLTHP.INP FILE

```
/BATCH,LIST
/FILENAM,PLTHP
/PREP7
/TITLE, MARK IA BASKET, SOLID BOTTOM  PLATE w/ 1/2" FLOW HOLES

SIZE = 0.08             ! Element Size
PRESSURE = -202.30              ! Uniform Pressure Load (35G Fuel Press.)
OR2 = 22.519/2                  ! Plate Outside Radius At Shroud Cutout
IR = 6.625/2            ! Plate INSIDE Radius
RR = 21.15/2            ! Support Rod Location Radius
HICP = 23.182           ! Height Of Center Pipe
HIR = 21.977            ! Height Of  Support Rods
RHOLE = 0.51/2          ! Radius Of Flow Hole
THICK1 = 0.864                  ! Center Pipe Thickness
THICK2=1.200                    ! Plate Thickness

ET,1,SHELL63            ! Center Pipe
ET,2,SHELL63                    ! Plate
ET,3,SOLID45                    ! Support Rod
ET,4,CONTAC52

R,1,THICK1
R,2,THICK2
R,4,1E6,0,2

DENS,1,.2854
EX,1,26.5E+06
NUXY,1,.3

DENS,2,.2854
EX,2,26.5E+06
NUXY,2,.3

TB,BKIN,1,3                                     ! Plasticity  Properties
TBTEMP,100
TBDATA,1,25.0E3,0.16E6                  ! Yield Strength v. Plastic Modulus
TBTEMP,200
TBDATA,1,21.3E3,0.16E6
TBTEMP,300
TBDATA,1,19.1E3,0.16E6


/COM **** DEFINING KEYPOINTS FOR PLATE GEOMETRY ****
/COM **** STARTING WITH 30 DEGREES ****
CSYS,1                          ! Cylindrical Coordinates
K,1,0,0                         ! Center of Plate
K,2,IR,0
K,3,OR2,0
K,4,9.6792,26
K,5,11.1057,22
K,6,OR2,30
```

```
K,7,11.001,0            ! Support Rod (1/2 Geometry)
K,8,9.660,0
K,9,9.6792,4
K,10,11.1057,8          ! End Support Rod
K,11,IR,30
K,12,9.66,30
K,13,11.001,30

L,2,8                   ! Line 1
L,7,3                   ! Line 2
L,8,7                   ! Line 3
LESIZE,3,,,6
L,12,11                         ! Line 4
CSYS,0
L,8,9                   ! Line 5
LESIZE,5,,,5
L,9,10                          ! Line 6
LESIZE,6,,,6
L,10,7                          ! Line 7
LESIZE,7,,,5
CSYS,1
LARC,11,2,1,IR                  ! Line 8 — Arc at Inside Plate (for Pipe)
LESIZE,8,,5             ! 5 Degree Segments for Inside Arc
LARC,6,3,1,OR2                  ! Line 9 — Inside Arc at Shroud Cutout

/COM **** DEFINING CENTER PIPE ****
K,20,0,0,HICP
K,21,IR,0,HICP
K,25,IR,30,HICP
LARC,25,21,20,IR        ! Line 10
LESIZE,10,,5            ! 5 Degree Segments for Inside Arc
L,2,21                          ! Vertical Line 11 at 0 Degrees
L,11,25                         ! Vertical Line 12 at 30 Degrees
CSYS,0
L,6,13                          ! Line 13
L,13,12                         ! Line 14 - Start Outline Bottom support Rods
LESIZE,14,,,10
L,12,4                          ! Line 15
LESIZE,15,,,10
L,4,5                   ! Line 16
LESIZE,16,,,10
L,5,13                          ! Line 17 - End Outline Bottom Support Rods
LESIZE,17,,,10
CSYS,1

/COM **** DEFINING AREAS ****
AL,1,5,6,7,2,9,13,14,4,8        ! Area 1

/COM **** DEFINING AREA FOR CENTER PIPE ****
AL,8,11,10,12           ! Area 2

/COM **** DEFINING SUPPORT ROD AREA ****
AL,3,5,6,7              ! Area 3
AL,14,15,16,17                  ! Area 4

/COM **** DEFINING HOLES IN BOTTOM PLATE ****
```

```
BOPTN,KEEP,YES

YH=0
WPLANE,,5.08,YH              ! Area 5
PCIRC,RHOLE
WPLANE,,6.54,YH              ! Area 6
PCIRC,RHOLE
WPLANE,,7.83,YH              ! Area 7
PCIR,RHOLE
WPLANE,,9.29,YH              ! Area 8
PCIRC,RHOLE

WPLANE,,9.5394,1.9668                ! Area 9
PCIRC,RHOLE
WPLANE,,6.4725,2.2426                ! Area 10
PCIRC,RHOLE
WPLANE,,7.8615,2.7238                ! Area 11
PCIRC,RHOLE

WPLANE,,9.8269,3.4048                ! Area 12
PCIRC,RHOLE

WPLANE,,3.7586,2.170                 ! Area 13

 PCIRC,RHOLE
WPLANE,,5.0316,2.905                 ! Area 14
PCIRC,RHOLE
WPLANE,,7.8808,4.55          ! Area 15
PCIRC,RHOLE
WPLANE,,9.1539,5.285                 ! Area 16
PCIRC,RHOLE

APLOT,ALL


/COM **** DELETE HOLES FROM PLATE ****
ASBA,1,5                ! Area 5 from Area 1 to give Area 17
ASBA,17,6
ASBA,18,7
ASBA,19,8
ASBA,20,9
ASBA,21,10
ASBA,22,11
ASBA,23,12
ASBA,24,13
ASBA,25,14
ASBA,26,15
ASBA,4,16

/COM **** DELETE UNUSED AREAS ****
ADELE,1
ADELE,5,26

/COM **** REPEAT MESH TO OBTAIN 60 DEGREE PATTERN & MERGE NODES ****
CLOCAL,11,,,,30
ALLS
```

```
ARSYM,Y,ALL

/COM **** ADDING & DELETING MORE AREAS ****
ASBA,7,6
ADELE,6,7
ASBA,27,4
ADELE,4
ADELE,27

/COM **** MERGE AND MESH AREAS ****
NUMMRG,ALL
AADD,3,5                ! Add Areas 3 & 5 to Give Area 4 (Support Rod Area)
ADELE,3,5,2
AADD,6,9                ! Add Areas 6 & 9 to Give Area 3 (Bottom Plate Area)
ADELE,6,9,3
ESIZE,SIZE
REAL,2
AMESH,3                 ! Mesh Bottom Plate Area
ESIZE,SIZE*3
AMESH,8
AMESH,28
TYPE,1
REAL,1
ESIZE,SIZE*6
AMESH,1,2               ! Mesh Center Pipe Area
AMESH,4                 ! Mesh Support Rod Area

/COM **** EXTRUDE SUPPORT ROD ****
TYPE,3
ESIZE,,28
VEXT,4,,,,,HIR
NUMMRG,NODE

/COM **** ADDING GAP ELEMENTS BENEATH SUPPORT RODS ****
CSYS,0
N,20307,10.297,4.1603,-1.200        ! Nodes At 4 Corners of Underside Rods
N,20317,8.6996,4.2431,-1.200        ! 2 Nodes At Each Inside Corner
N,20121,8.6996,-4.2431,-1.200
N,20131,10.297,-4.1603,-1.200
D,20307,ALL                         ! Constraining The Nodes
D,20317,ALL
D,20121,ALL
D,20131,ALL

TYPE,4                                    ! Contact52 Gap Elements
REAL,4
E,20307,307
E,20317,317
E,20121,121
E,20131,131

/COM **** CONSTRAINT EDGES OF THE PLATE ****
CSYS,1
NROTAT,ALL
NSEL,S,LOC,Y,29.9,30.1
D,ALL,UY,,,,,ROTX,ROTZ
```

```
NSEL,ALL
CSYS,1
NROTAT,ALL
NSEL,S,LOC,Y,329.9,330.1
D,ALL,UY,,,,,ROTX,ROTZ
NSEL,ALL

/COM **** APPLYING AXIAL CONSTRAINT TO EDGE OF PLATE AT PIPE ****
NSEL,S,LOC,Z,0
NSEL,R,LOC,X,IR
D,ALL,UZ
NSEL,ALL

/COM **** FUEL LOADING (PRESSURE) & ACCELERATION ****
ASEL,S,LOC,Z,0              ! Selecting Bottom Plate
ASEL,U,AREA,,4              ! Unselecting Support Rod Area
NSLA,S,1                    ! Select All Nodes Associated with Selected Area
SF,ALL,PRES,PRESSURE        ! Apply Pressure On Bottom Plate
ASEL,ALL
NALL
NSEL,S,LOC,Z,HIR            ! Select Support Rod Top Area
NSEL,R,LOC,X,8.5,15
SF,ALL,PRES,10831           ! 10831 Psi Pressure
D,ALL,UX,,,,,UY             ! Horizontal Constraint at Top of Support Rod (Friction)
NALL
NSEL,S,LOC,Z,HICP           ! Select Center Pipe Top Area
NSEL,R,LOC,X,0,7
SF,ALL,PRES,8647            ! 8647 Psi Pressure
NALL
SAVE
FINI

/COM **** SOLUTION AND 35g ACCELERATION ****
/SOLU
ACEL,,,-35
NSUBST,10
SOLVE
SAVE
FINI
```

COMPUTER RUN COVER SHEET

Project Number:	KH-8009-8
Computer Code:	ANSYS®-PC
Software Version:	5.3
Computer System:	Windows 95, Pentium® Processor
Computer Run File Number:	KH-8009-8-05
Unique Computer Run File Name:	Plthp.out
Run Description:	Elastic/Plastic Vertical Drop Analysis of the Mark IA Storage Basket
Creation Date/Time:	13 February 1998 / 10:04:52 pm

Zachary G.Sargent 2/19/98
Prepared By: Zachary G. Sargent Date

Henry Averette 2/19/98
Checked By: Henry Averette Date

REVISION	0	1	2		PAGE 65 OF 77
PREPARED BY / DATE	BW 4/17/97	ZGS 7/14/98	02/08/99		
CHECKED BY / DATE	JN 4/17/97	HAS 7/14/98	02/08/99		

COMPUTER RUN COVER SHEET

Project Number:	KH-8009-8
Computer Code:	ANSYS®-PC
Software Version:	5.3
Computer System:	Windows 95, Pentium® Processor
Computer Run File Number:	KH-8009-8-05
Unique Computer Run File Name:	hdrop.inp
Run Description:	Horizontal Drop Analysis of the Mark IA Storage Basket
Creation Date/Time:	9 February 1998 / 2:51:48 pm

Zachary G. Sargent 2/19/98

Prepared By: Zachary G. Sargent Date

Henry Averette 2/19/98

Checked By: Henry Averette Date

LISTING OF HDROP.INP FILE

```
/BATCH,LIST
/FILENAM,HDROP
/PREP7
/TITLE,MARK IA BASKET 101G SIDE DROP

SIZE = 1.00          ! Element Size
THICK1=1.200         ! Plate Thickness
THICK2= 0.864        ! Center Pipe Thickness
GLOAD = 101          ! 101g Side Drop Load
OR = 22.519/2        ! Plate Outside Radius At Shroud Cutout
IR = 6.625/2-THICK2  ! Plate Inside Radius
HICP = 23.182        ! Height Of Center Pipe
HIR = 21.977         ! Height Of Support Rods

*AFUN,DEG            ! Use Degrees For Function Input/Output

ET,1,SHELL43                 ! 3D Plastic Large Strain Shell
ET,2,SHELL43
ET,3,BEAM4                   ! 3D Elastic Beam
ET,4,MASS21,,,2      ! 3D Mass Without Rotary Inertia
ET,5,CONTAC52,,,,1   ! 3D Point to Point contact Element
ET,7,LINK11                  ! Centerline Spring @ Drop Interface

R,1,THICK1
R,2,THICK2
R,3,10,100,100,10,10                         ! Rigid Link
R,4,18.5                                     ! Weight/5 (lb) From Adjacent Pipe
R,5,1E6,,,1E6                        ! Gap Element Properties
R,6,2.874,.403,1.307,1.34,3.07               ! Support Rod Properties
R,7,1E4                                      ! Centerline Link Element

DENS,1,.2854
EX,1,27E06
NUXY,1,.3

EX,2,27E06
DENS,2,5.786                                 ! Pseudo Density Of Upper Pipe Elements For Fuel Load

EX,3,27E06
DENS,3,0.0                                   ! Massless Rigid Links

TB,BKIN,1,3                                  ! Plasticity  Properties
TBTEMP,100
TBDATA,1,25.0E3,0.16E6               ! Yield Strength v. Plastic Modulus
TBTEMP,200
TBDATA,1,21.3E3,0.16E6
TBTEMP,300
TBDATA,1,19.1E3,0.16E6


/COM **** DEFINING KEYPOINTS FOR PLATE GEOMETRY ****
```

```
/COM **** STARTING WITH 30 DEGREES ****
CSYS,1                        ! Cylindrical Coordinates
K,1,0,0                       ! Center of Plate
K,2,IR,0                      ! Inside Radius of Plate at 0 Degrees
K,3,OR,0              ! Outside Radius at 0 Degrees
K,4,OR,30             ! Outside Radius at 30 Degrees
K,5,IR,30             ! Inside Radius at 30 Degrees
K,6,OR,60             ! Outside Radius at 60 Degrees
K,7,IR,60             ! Inside Radius at 60 Degrees

K,100,9.7692,26               ! Support Rod Corner (30 Degrees)
K,101,11.1057,22      ! Support Rod Corner
K,102,11.001,30
K,103,11.1057,38      ! Support Rod Corner
K,104,9.7692,34               ! Support Rod Corner
K,105,9.66,30
K,106,10.3305,30      ! Support Rod Center for Beam Element

L,2,3                 ! Line 1

LARC,3,4,1,OR                 ! Line 2 - Outside Arc , 0 to 30 Degrees
LESIZE,2,,2.5         ! 2.5 Degree Segments, Outside Arc

L,4,102                       ! Line 3
L,102,101             ! Line 4
L,101,100             ! Line 5
L,100,105             ! Line 6
L,105,5                       ! Line 7

LARC,2,5,1,IR                 ! Line 8 - Inside Arc 0 to 30 Degrees
LESIZE,8,,10          ! 10 Degree Segments, Inside Arc

LARC,4,6,1,OR                 ! Line 9 - Outside Arc, 30 to 60 Degrees
LESIZE,9,,2.5         ! 2.5 Degree Segments, Outside Arc

L,6,7                 ! Line 10

LARC,5,7,1,IR                 ! Line 11 - Inside Arc 30 to 60 Degrees
LESIZE,11,,10                 ! 10 Degree Segments, Inside Arc

L,102,103             ! Line 12
L,103,104             ! Line 13
L,104,105             ! Line 14
L,105,106             ! Line 15
L,106,102             ! Line 16

AL,1,2,3,4,5,6,7,8            ! Area 1 - 0 to 30 Degrees
AL,7,14,13,12,3,9,10,11               ! Area 2 - 30 to 60 Degrees
AL,16,15,6,5,4                        ! Area 3 - 1/2 Rod
AL,15,16,12,13,14             ! Area 4 - 1/2 Rod


/COM **** DEFINE CENTER PIPE ****
K,21,0,0,HICP                 ! Center Keypoint, Pipe Height
K,22,IR,0,HICP                ! Inside Radius, Pipe Height, 0 Degrees
K,25,IR,30,HICP               ! Inside Radius, Pipe Height, 30 Degrees
```

```
K,27,IR,60,HICP             ! Inside Radius, Pipe Height, 60 Degrees
K,31,0,0,6          ! Center Keypoint, 6 Inches From Plate
K,32,IR,0,6         ! Inside Radius, 6 Inches from Plate, 0 Degrees
K,35,IR,30,6        ! Inside Radius, 6 Inches from Plate, 30 Degrees
K,37,IR,60,6        ! Inside Radius, 6 Inches from Plate, 60 Degrees


LARC,22,25,21,IR            ! Line 17 - Inside Arc, Pipe Height, 0 to 30 Degrees
LESIZE,17,,10                       ! 10 Degree Segments for Inside Arc

LARC,25,27,21,IR            ! Line 18 - Inside Arc, Pipe Height, 0 to 60 Degrees
LESIZE,18,,10                       ! 10 Degree Segments for Inside Arc

LARC,32,35,31,IR            ! Line 19 - Inside Arc, Pipe Height, 0 to 30 Degrees
LESIZE,19,,10                       ! 10 Degree Segments for Inside Arc

LARC,35,37,31,IR            ! Line 20 - Inside Arc, Pipe Height, 0 to 30 Degrees
LESIZE,20,,10                       ! 10 Degree Segments for Inside Arc


L,2,32                              ! Line 21 - Vertical at 0 Degrees
L,32,22                             ! Line 22 - Vertical at 0 Degrees
L,5,35                              ! Line 23 - Vertical at 30 Degrees
L,35,25                             ! Line 24 - Vertical at 30 Degrees
L,7,37                              ! Line 25 - Vertical at 60 Degrees
L,37,27                             ! Line 26 - Vertical at 60 Degrees


AL,8,21,19,23               ! Area 5 - Center Pipe (0 to 30, Lower)
AL,11,23,20,25                      ! Area 6 - Center Pipe (30 to 60, Lower)
AL,19,22,17,24                      ! Area 7 - Center Pipe (0 to 30, Upper)
AL,20,24,18,26                      ! Area 8 - Center Pipe (30 to 60, Upper)

AADD,1,2                    ! Merging Bottom Plate
ADELE,1,2


/COM **** MESH AREAS ****
ESIZE,SIZE
MAT,1
REAL,1
AMESH,9             ! Bottom Plate
AMESH,3,4

ESIZE,SIZE          ! Coarse Elements
TYPE,2
REAL,2
AMESH,7,8           ! Center Pipe, Upper Part

ESIZE,SIZE-0.25     ! Finer Elements
TYPE,2
REAL,2
AMESH,5,6           ! Center Pipe, Lower Part
```

```
/COM **** REPEAT MESH FOR 180 DEGREE MODEL ****
AGEN,3,ALL,,,,60        ! Generate 3 Times for a Total of 180 Degrees


/COM **** MERGE COINCIDENT NODES ****
NUMMRG,NODE

NALL
EALL


/COM **** ADDING MASSES TO CENTER PIPE HOLE ****
/COM **** TO ACCOUNT FOR ADJACENT PIPE LOAD ****
TYPE,4
REAL,4
E,1
E,44
E,45
E,47
E,48


/COM **** MODIFY 30 DEGREE ARC OF PIPE ELEMENTS ****
/COM **** TO ADD FUEL MASS ****
CSYS,1
NSEL,S,LOC,X,IR              ! Select Nodes Based on Inside Radius
NSEL,R,LOC,Y,150,180                 ! Reselect From Set, From 150 to 180 Degrees
ESLN,S,1                     ! Select Elements Associated With Selected Nodes
EMODIF,ALL,MAT,2             ! Modify The Selected Elements to Material 2
ESEL,ALL                     ! Reselect All Elements


/COM **** ADDING SUPPORT RODS ****
TYPE,3                               ! Beam Elements
REAL,6
MAT,1
N,2135,10.3305,30,HIR                ! End of Beam Element (Support Rod) 30 Degrees
N,2320,10.3305,90,HIR                ! End of Beam Element (Support Rod) 90 Degrees
N,2639,10.3305,150,HIR               ! End of Beam Element (Support Rod) 150 Degrees

E,135,2135                   ! Beam at 30 Degrees
E,135,49                     ! Spreading Rod Interface to Corners
E,135,50
E,135,53
E,135,54

E,320,2320                   ! Beam at 90 Degrees
E,320,322                    ! Spreading Rod Interface to Corners
E,320,324
E,320,328
E,320,330

E,639,2639                   ! Beam at 150 Degrees
E,639,641                    ! Spreading Rod Interface to Corners
E,639,643
E,639,647
```

```
E,639,649
EALL
NALL

/COM **** DEFINING OFFSET NODES ON DROP SIDE OF PLATE ****
/COM **** FROM 0 TO 30 DEGREES ****
N,5001,OR,0,-0.5               ! Node 5001 at 0 Degrees, Outside Radius
N,5013,OR,30,-0.5              ! Node 5013 at 30 Degrees, Outside Radius
FILL,5001,5013                        ! Fill between Nodes 5001 and 5013

REAL,3                                ! Beam Elements (Beam4)
TYPE,3
MAT,3
E,2,5001                       ! Generate Element Between Nodes 2 and 5001
E,12,5002                      ! Generate Element Between Nodes 12 and 5002
EGEN,11,1,-1                   ! Generate Elements Based On Last One, Increase Node # by 1
E,11,5013                      ! Generate Element Between Nodes 11 and 5013

/COM **** BOTTOM PLATE INTERFACE WITH MCO ****
/COM **** SHIFT ORIGIN TO MCO CENTER TO DEFINE MCO ID****
N,6001,OR+0.001,0,-0.5                       ! Create Node 6001 at Outside Radius +0.001 in.
CSYS,1                                       ! Change to Cylindrical Coordinates

J=0.001
*DO,I,1,12                            ! Start Loop
    J=J+0.002                         ! Gap Increases 0.002 in. for every 2.5 Degrees
    N,6001+I,OR+J,2.5*I,-0.5
*ENDDO                                ! End Loop

NROTAT,6002,6013                      ! Rotate Nodes 6002 thru 6013
D,6001,ALL,,,6013                     ! Constrain Nodes 6001 thru 6013

TYPE,7                                       ! Soft Spring @ MCO Id (Link11)
REAL,7
E,5001,6001                           ! Create Element between Nodes 5001 and 6001

TYPE,5                                       ! Gap Elements (Contac52)
REAL,5
E,5001,6001
E,5002,6002
EGEN,12,1,-1

/COM **** CONSTRAINING EDGES OF CENTER PIPE AT TOP ****
CSYS,1
NSEL,S,LOC,Z,HICP                     ! Selecting Pipe Height
NSEL,R,LOC,X,IR                       ! Selecting Pipe Radius
D,ALL,UX                              ! Constraint in X-direction, Pipe End

NSEL,R,LOC,Y,0,5                      ! Selecting Nodes At Y=0 To Y=5
D,ALL,UZ                              ! Constraint in Z-direction
NSEL,ALL                              ! Select ALL Nodes


/COM **** APPLYING SYMMETRY BOUNDARY CONDITION ****
CSYS,0
NSEL,S,LOC,Y,0                        ! Selecting Nodes At Y=0
```

```
D,ALL,UY,0.0,,,,ROTX,ROTZ          ! Symmetry BC at Y=0
NALL
EALL



/COM **** APPLYING 1.5 TIMES G LOAD TO SATISFY ****
/COM **** ASME LEVEL D BUCKLING CRITERIA****
ACEL,-1.5*GLOAD                    ! 1.5 * 101 g's = 151.5 g's
FINI

/COM **** SOLUTION ****

/SOLU
OUTRES,ALL,1                       ! Write All Solution Data Every first Substep of Each Loadstep
AUTOTS,ON                   ! Use Automatic Time Stepping
NLGEOM,ON                   ! Include Large Deformation Effects
NSUBST,100                  ! Use 100 Substeps
NEQIT,100                   ! Use 100 Equilibrium Iterations For Each Substep

CNVTOL,F,,0.005             ! Sets Tolerance for Force Convergence Value
CNVTOL,M,,0.005             ! Sets tolerance for Moments Convergence Value

SOLVE                              ! Start the Solution
SAVE
FINI


/COM **** POSTPROCESSING ****
/POST1                                    ! General Postprocessor
SET,LAST                           ! Read Last Data Set From Results File
/SHOW,GRAPHICS,PIC,1               ! Specify Graphics Vector Display Device
/VIEW,ALL                          ! Defines Viewing Direction For the Display

EPLOT                                     ! Element Plot
PRRS                                      ! Prints the Constrained Node Reaction Solution
ESEL,U,TYPE,,3,5                   ! Unselect  Elements of Type 3 & 5

/EDGE,,1                           ! Edge Display

PLNSOL,S,INT                              ! Displays Results as Stress Intensity Contours
PLNSOL,EPPL,EQV                    ! Displays Results as Plastic Equivalent Strain

SAVE
FINI
/EXIT
```

PARSONS

CLIENT: DE&S Hanford **FILE NO:** KH-8009-8-05

PROJECT: MCO Design **DOC. NO.:** HNF-SD-SNF-DR-003, Rev. 2, Appendix 7

COMPUTER RUN COVER SHEET

Project Number:	KH-8009-8
Computer Code:	ANSYS®-PC
Software Version:	5.3
Computer System:	Windows 95, Pentium® Processor
Computer Run File Number:	KH-8009-8-05
Unique Computer Run File Name:	Hdrop.out
Run Description:	Horizontal Drop Analysis of the Mark IA Storage Basket
Run Date/Time:	10 February 1998 / 8:21:22 pm

Zachary G. Sargent 2/19/98

Prepared By: Zachary G. Sargent Date

Henry Averette 2/19/98

Checked By: Henry Averette Date

REVISION	0	1	2		PAGE 73 OF 77
PREPARED BY / DATE	BW 4/17/97	ZGS 7/14/98	02/08/99		
CHECKED BY / DATE	JN 4/17/97	HAS 7/14/98	02/08/99		

PARSONS

CLIENT: DE&S Hanford **FILE NO:** KH-8009-8-05

PROJECT: MCO Design **DOC. NO.:** HNF-SD-SNF-DR-003, Rev. 2, Appendix 7

COMPUTER RUN COVER SHEET

Project Number:	KH-8009-8
Computer Code:	ANSYS®-PC
Software Version:	5.4
Computer System:	Windows 95, Pentium II® Processor
Computer Run File Number:	9812100934
Unique Computer Run File Name:	Rod3d.inp
Run Description:	Mark IA Basket Support Rod Buckling
Creation Date/Time:	8 December 1998/4:09PM

For P. Noss 12/10/98

Prepared By: Phil Noss Date

FOR MIKE COHEN 12/18/98

Checked By: Mike Cohen Date

REVISION	0	1	2		PAGE 74 OF 77
PREPARED BY / DATE	BW 4/17/97	ZGS 7/14/98	02/08/99		
CHECKED BY / DATE	JN 4/17/97	HAS 7/14/98	02/08/99		

LISTING OF ROD3D.INP FILE

```
fini
/cle
/prep7
/title,MCO Mark1A Basket Support Rod, 3D

et,1,45
et,2,43
et,3,52

r,2,.5
r,3,1E7,.265,3

ex,1,27.2E6
nuxy,1,.3
tb,bkin,1
tbdata,1,23250,160000

ex,5,27.2E8   !special rigid region at load application
nuxy,5,.3

!create rod
n,1,9.796
n,5,11.226
fill,1,5
n,16,9.796,.605
fill,1,16,2
n,10,11.215,.501
fill,6,10
n,15,11.181,1.001
fill,11,15
n,19,10.690,1.229
fill,16,19
n,20,11.001,1.257
nsym,y,20,all
ngen,12,50,1,49,1,,,2

type,1
e,1,6,7,2,51,56,57,52
egen,4,1,-1
egen,3,5,-4
esym,,20,all
egen,11,50,-24

numm,node

nsel,z,22
nrse,y
nrse,x,10.1,10.3
nmod,all,10.328
d,all,uz,-.3
d,all,ux
d,all,uy
enod
```

```
type,1
mat,5
emod,all
nsel,z
d,all,all
alls

!Create MCO Shell
csys,1
n,601,11.743,-30
n,623,11.743,-30,44
fill,601,623
ngen,7,50,601,623,1,,10

type,2
real,2
mat,1
e,601,602,652,651
egen,22,1,-1
egen,6,50,-22

nsel,y,-30
nase,y,30
nrot,all
d,all,uy
d,all,rotx
d,all,rotz
nsel,z
d,all,all
alls

!create gaps from rod to shell
type,3
real,3
e,5,751
rp11,50,1

/solu
auto,on
pred,on
nlgeom,on
outres,all,all
time,1
nsub,500
neqit,100
!solcon,on
solve
fini
```

PARSONS

CLIENT: DE&S Hanford **FILE NO:** KH-8009-8-05

PROJECT: MCO Design **DOC. NO.:** HNF-SD-SNF-DR-003, Rev. 2, Appendix 7

COMPUTER RUN COVER SHEET

Project Number:	KH-8009-8
Computer Code:	ANSYS®-PC
Software Version:	5.4
Computer System:	Windows 95, Pentium II® Processor
Computer Run File Number:	9812100934
Unique Computer Run File Name:	Rod3d.out
Run Description:	Mark IA Basket Support Rod Buckling
Run Date/Time:	10 December 1998/9:34AM

FOR P. NOSS 12/10/98

Prepared By: Phil Noss Date

FOR MIKE COHEN 12/18/98

Checked By: Mike Cohen Date

PARSONS	**CALCULATION PACKAGE**	**FILE NO:** KH-8009-8-06 **DOC. NO:** HNF-SD-SNF-DR-003, Rev. 2 Appendix 8 **PAGE** 1 of 73

PROJECT NAME:	**CLIENT:**
MCO Final Design	DE&S Hanford, Inc

CALCULATION TITLE:

STRESS ANALYSIS OF THE MARK IV STORAGE BASKET

PROBLEM STATEMENT OR OBJECTIVE OF CALCULATION:

Perform a stress analysis of the Mark IV Storage Basket in accordance with Revision 5 of the MCO Performance Specification. Two loading conditions are considered:

1. Lifting at a max. temperature of 100° C.
2. Deadweight stacking within the MCO at a design temperature of 132° C.

DOCUMENT REVISION	AFFECTED PAGES	REVISION DESCRIPTION	PREPARED BY INITIALS / DATE	CHECKED BY INITIALS / DATE	APPROVED BY INITIALS / DATE
0	1-67	Initial Issue	Bob Winkel	Joe Nichols	Charles Temus
1	1-68	Incorporated H.P. Shrivastava's comments to reflect error in formula. Revised Design temperature from 375°C to 132°C	Zachary Sargent	Henry Averette	Charles Temus
2	1-73	Revised to incorporate solid base plate and threaded center pipe	2/9/99 For M. Cohen	2/9/99	2/9/99

TABLE OF CONTENTS

LIST OF TABLES

LIST OF FIGURES

LIST OF APPENDICES

1. INTRODUCTION

This calculation documents the evaluation of the Mark IV Storage Basket for lifting and deadweight loading. The structural adequacy evaluation is based upon limiting stresses to 1/3 yield or 1/5 ultimate material properties for the lifting loading and Section III of the ASME Code for the deadweight stacking loading within the MCO.

2. REFERENCES

1. Duke, 1996, *Performance Specification for the Spent Nuclear Fuel Multi-Canister Overpack*, HNF-S-0426, Rev. 5, Duke Engineering and Services Hanford, Richland, Washington, December 1998 .
2. Duke, "MCO Mark IV SNF Storage Basket", Drawing No. H-2-828070, Rev. 3, Duke Engineering and Services Hanford, Richland, Washington.
3. ASME, 1998, *ASME Boiler and Pressure Vessel Code, Section II, Materials, Part D--Properties*, American Society of Mechanical Engineers, New York, New York.
4. ASME, 1998, *ASME Boiler and Pressure Vessel Code, Section III, Subsection NG*, American Society of Mechanical Engineers, New York, New York.
5. ASME, 1998, A*SME Boiler and Pressure Vessel Code, Section III, Subsection NF*, American Society of Mechanical Engineers, New York, New York.
6. Not Used
7. Roark, R. J. and Young, W. C., 1975, *Formulas for Stress and Strain*, 5th Edition, McGraw-Hill, New York, New York.
8. AISC, 1989, *Manual of Steel Construction, Ninth Edition,* American Institute of Steel Construction, Chicago, Illinois.
9. *Machinery's Handbook, Nineteenth Edition,* Industrial Press Inc., New York, NY.
10. *Fasteners Standards, Sixth Edition,* Industrial Fasteneers Institute, Cleveland, Ohio.
11. G.C. Mok, L.E. Fischer, T.S. Hsu, "*Stress Analysis of Closure Bolts for Shipping Casks",* NUREG/CR-6007, UCRL-ID-110637, U.S. Nuclear Regulatory Commission, 1992.

3. ASSUMPTIONS

1. For the dead weight loading when the baskets are stacked within the MCO, it was conservatively assumed that the center tube carries the weight of the baskets above, for center tube structural adequacy evaluations, and for the support rod evaluations, it was conservatively assumed that the support rods carry the full weight of the baskets above.

2. Other assumptions as noted within the calculation documentation.

4. GEOMETRY

The Mark IV Storage Basket geometry is defined in Drawing No. H-2-828070. The storage basket primary structural components are identified in the 60° sector shown in Figure 1. The geometry pattern shown in Figure 1 is repeated every 60°, including the Support Rod. Holes in the bottom plate are designed to allow drainage from the fuel rods. Each storage basket has a capacity of 54 fuel rods.

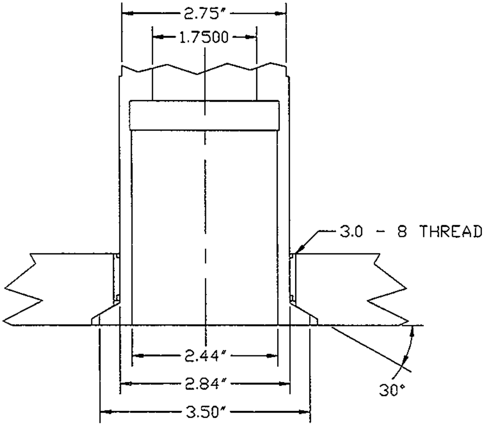

Figure 1. Mark IV Storage Basket Primary Structural Components.

The Support Rods are constructed from 1-5/16 in. round bar which are bolted into the bottom plate. The Center Tube is basically a 2.84 in. O.D., 1.75 I.D. hollow bar and is attached to the bottom plate with a 45° conical lip tightened against a 3.00 - 8 Class 2 thread. The Center Tube is conservatively analyzed as a 2.75-inch hollow bar. The baskets are designed to be stacked within the MCO such that the center tube and six support rods share the weight of the baskets stacked above. As noted in Section 3, establishing the center tube/support rods load division was avoided by conservatively assuming that either the center tube or support rods carried the entire stack weight.

Not shown is a 0.05-in. thick, 11.0-in. high sheet metal shroud at the basket O.D. immediately above the bottom plate. During normal operations, this sheet metal shroud is not subjected to significant loading and is considered to be non-structural.

The Mark IV components which were subjected to a structural evaluation are listed in Table 1. Structural adequacy of each component is addressed in Section 8. A summary of the evaluation results is provided in Section 8.6.

5. MATERIAL PROPERTIES

Per the Reference 2 drawing, the specified material for the Mark IV Storage Basket components is 304 or 304L stainless steel. For this analysis, the only mechanical properties of interest are the elastic modulus, yield strength, ultimate strength, and ASME stress allowable, S_m. Properties of 304L stainless steel are used. The appropriate values were extracted from Reference 3, and are listed in Table 2.

6. ACCEPTANCE CRITERIA

For the lifting and dead weight stacking loadings considered, the appropriate acceptance criteria is discussed below.

6.1 Lifting Loads

Per Section 4.12.3 of the Reference 1 Performance Specification, the design shall meet safety factors of 3 on material yield and 5 on material ultimate strength. The safety factors apply from 5°C to 100°C. The load bearing members of a special lifting device shall be capable of lifting three times the combined weight of the shipping container with which it will be used, plus the weight of intervening components of the special lifting device, without excess of the corresponding minimum tensile yield strength of their materials of construction. They shall also be capable of lifting five times that weight without exceeding the ultimate tensile strength of the materials. The shear stress shall be taken as an average value over the cross section, and that the tensile stress may be due to direct or bending loads. The bending stress is defined as being linear over the cross section. The load bearing members of a special lifting device are interpreted to apply to all components of the storage baskets in the load path between the lifting grapple and fuel. At the maximum lifting temperature of 100°C, the allowables are:

P_m = membrane stress
P_b = bending stress

$$\frac{Sy}{3} = \frac{21.0ksi}{3} = 7.0ksi$$

$$\frac{Su}{5} = \frac{65.6ksi}{5} = 13.12ksi$$

$$\Rightarrow Use: Pm + Pb \leq 7.0ksi$$

Table 1. Mark IV Storage Basket Structural Components.

Component Name	Component Part No. in Dwg. H-2-828070	Component Function
Center Tube	5	(1) Provide support to above baskets when stacked inside the MCO (2) Provide dip tube access to the bottom of the MCO (3) Lifting grapple interface
Support Rod	6	Provide support to above baskets when stacked inside the MCO
Bottom Plate	2	(1) Mounting base for center pipe and support rods. (2) Maintain position of spent fuel rods after the rods are inserted into the basket

Table 2
ASME Code Material Properties for Type 304L Stainless Steel

Temperature		E	S_M	S_Y	S_U
°F	°C	Table TM-1, Group G	Table 2A, page 322	Table Y-1, page 524	Table U, page 441
70	—	**28.3E+06**	**16.7 ksi**	**25.0 ksi**	**70.0 ksi**
100	—	—	**16.7 ksi**	**25.0 ksi**	**70.0 ksi**
200	—	**27.6E+06**	**16.7 ksi**	**21.3 ksi**	**66.2 ksi**
212	**100**	**27.5E+06**	**16.7 ksi**	**21.0 ksi**	**65.6 ksi**
270	**132**	**27.2E+06**	**16.7 ksi**	**19.8 ksi**	**62.5 ksi**
300	—	**27.0E+06**	**16.7 ksi**	**19.1 ksi**	**60.9 ksi**

Note: Underlined values determined by linear interpolation, all other values taken from Section II, Part D of the ASME Code.

6.2 Deadweight Loads

Per Section 4.12.3 of Reference 1, the "baskets will be able to support the fuel at 1.0g while at 132°C". Reference 1 does not specify the acceptance for this loading. For consistency with the Mark 1A basket criteria, Reference 4 (Subsection NG) was assumed. For membrane and membrane plus bending stresses, the allowable stresses of Table 3 are applied.

Table 3. Allowable Stresses - Deadweight.

Temperature		S_M	Design/Level A Stress Limits	
°F	°C	[Table 2]	P_M (S_M)	$P_M + P_b$ (1.5 S_M)
212	**100**	**16.7 ksi**	**16.7 ksi**	**25.1 ksi**
270	**132**	**16.7 ksi**	**16.7 ksi**	**25.1 ksi**

Note 1: Design & Level A Stress Limits from NG-3221 & NG-3222 respectively.

2: Axial compressive stresses must be limited to values established in accordance with one of the following:
- NG-3133.3 (external pressure)
- NG-3133.6 (axial compression on cylindrical shells)
- NF-3322.1(c) (column type members)

The bottom basket center pipe and support rods are subjected to compression loading, with the potential for column buckling. Since Subsection NG does not address column buckling, Subsection NG was supplemented by Subsection NF. For the center pipe, the more restrictive of NG-3133.6 (shell buckling) or NF-3322.1(c)(2) was used. For the support rods, the NF criteria was used.

7. LOAD CONDITIONS & COMBINATIONS

As previously mentioned, the Mark IV Storage Baskets were evaluated for two load cases:

1. Lifting of the basket and contents with a maximum temperature of 100°C.
2. Deadweight stacking of the baskets inside the MCO at the design temperature of 132°C. A full stack consists of five baskets, resulting in the bottom basket supporting four baskets above.

No other loads were considered. Note that Section 4.11 of the performance specification exempts the Mark IV baskets from drop accident loading.

8. STRESS ANALYSIS CALCULATIONS

The Mark IV Storage Baskets were evaluated using both hand calculations (Mathcad) and finite element calculations (ANSYS). The finite element calculations were limited to stress predictions in the relatively complex bottom plate (Section 8.5).

INPUT PARAMETERS:

$d_r = 1.31$ in.	Support Rod Diameter
$l_r = 26.687$ in.	Support Rod Length Extending Above Bottom Plate
$S_y := 19800 \frac{lb}{in^2}$	304L Yield Strength @ Design Temp. of 132°C
$E = 27.2 \times 10^6$ lbf/in^2	304L Young's Modulus @ Design Temp.
$D_o = 2.75$ in.	Center Pipe O.D.
$D_i = 1.75$ in.	Center Pipe I.D.
$l_p = 30.467$ in.	Center Pipe, Overall Length

$A_P = \frac{\pi}{4}\left[D_O{}^2 - D_i{}^2\right]$ Center Pipe Area (away from grapple interface)

$A_P = 3.534 \text{ in}^2$

$I_P = \frac{\pi}{4}\left[D_O{}^4 - D_i{}^4\right]$

$I_P = 2.347 \text{ in}^4$ Center Pipe Mom. of Inertia

$r_p = \frac{1}{4}\sqrt{D_O{}^2 + D_i{}^2}$ Center Pipe Radius of Gyration

$r_p = 0.815$

$W_b = 3218$ lb. Mark IV Loaded Basket Weight

$D_{ti} = 3.00 - 8$ Thread Attach - Center Post to Bottom Plate 3.0 dia-8 threads/in.

ALLOWABLE STRESSES

LIFTING LOAD CONDITION:

Criteria: Limit stresses to 1/3 material yield or 1/5 material ultimate strength. Temp. = 100 deg C, Establish Allowable Stresses:

Basic tension allowable (304L Material)-

$$S_{u100} := 65600 \frac{\text{lb}}{\text{in}^2}$$

$$\frac{S_{u100}}{5} = 13120 \cdot \frac{lb}{in^2}$$

Base material lifting allowable controlled by yield strength

$$S_{y100} = 21000 \frac{\text{lb}}{\text{in}^2}$$

$$\frac{S_{y100}}{3} = 7000 \frac{\text{lb}}{\text{in}^2}$$

DESIGN CONDITION:

Criteria: Assume ASME NG allowables, Design Temp. = 132°C (270 °F),

$$S_{m132} = 16700 \frac{\text{lb}}{\text{in}^2}$$

$$S_{y132} = 19800 \frac{\text{lb}}{\text{in}^2}$$

8.1 Center Pipe

8.1.1 Deadweight Stacking Load Condition

Membrane Stress

$A_{P(MIN)}$ = Minimum Center Post area at grapple interface

$$= \frac{\pi}{4}\left[(2.375-.005)^2 - (2.030+.005)^2\right] = 1.196 \text{ in}^2$$

Conservatively assume all four baskets above the bottom basket are carried by the center pipe

$$P_M = \frac{4(W_b)}{A_{P(MIN)}} = \frac{4(3218)}{1.196}$$

$$= 10{,}762\ \frac{lb}{in^2}$$

$$Ratio = \frac{P_m}{S_{m132}}$$

Ratio = 0.64 Membrane stress OK

Check Buckling per ASME NG-3133.6 (also consider NF-3322.1(c)(2) for column buckling)

$$T = 0.5 \cdot i$$

$$R := \frac{D_o}{2} - T$$

$$R = 0.875 \cdot i$$

$$A := \frac{0.12}{\left(\frac{R}{T}\right)}$$

$$A = 0.071$$

Obtain B value from ASME Code, Section II, Figure HA-3

$$B > 10{,}000\ \frac{lb}{in^2}$$

Stress thru center portion of post $= \dfrac{4(W_b)}{A_p} = \dfrac{4(3218)}{3.534} = 3642\dfrac{lb}{in^2}$

$$Ratio := \frac{P_m}{B}$$

Ratio = 0.36 Axial compressive stress limit OK per ASME NG

Checking column buckling per ASME NF 3322.1:

$$E = 2.72*10^7 \frac{\text{lb}}{\text{in}^2}$$

$$I_p = 2.347 \cdot \text{in}^4$$

$K_p := 0.$ Effective length factor, pinned @ top, Reference 8

lp = 30.467 in.

$$r_p = 0.815\text{in}$$

$$\frac{K_p l_p}{r_p} = 29.91$$ < 120, use Eq. (6a)

$$F_a = S_{y132}\left[0.47 - \frac{Kl/r}{444}\right]$$

F_a = 7972 psi < B, above, column buckling controls

$$\text{Ratio} = \frac{P_m}{F_a}$$

Ratio = 0.46 < 1.0, ASME NF limits met

Shear Stresses in Conical Lip:

The shear area through the conical lip is taken at a point mid-way between the outside diameter of the thread and the outside maximum diameter of the conical lip.

$$D_{LIP} = \frac{D_{THREAD} + D_{LIP,OUTER}}{2} = \frac{3.5 + 2.84}{2} = 3.17 \text{ in.}$$

At this point the lip is $.180 + \left(\frac{3.5 - 3.17}{2}\right) Tan 30° = 0.28$ inch thick, resulting in a shear area:

$$A_{SHEAR} = \pi(3.17)(0.28) = 2.74 \text{ in}^2$$

Conservatively taking all 5 baskets (only the base plate and payload weight is carried by the lower basket), the shear stress is:

$$P_S = \frac{5(3218)}{3.93} = 5869 \ \frac{\text{lb}}{\text{in}^2}$$

$$\text{Ratio} = \frac{P_S}{0.6(S_M)}$$

$$= \frac{5869}{0.6(16{,}700)}$$

$$\text{Ratio} = 0.59$$

Shear Stress in Threaded Attachment:

The applied load due to deadweight stacking could be carried by the threaded portion of the center pipe to base attachment if the thread were loose. The threaded attachment is a 3.00 - 8 Class 2A thread with a nominal engagement of one-half the base plate thickness. Allowing for a thread relief at the end of the thread and a chamfer at the top of the base plate, three threads are assumed to carry the load.

The shear area of the external and internal threads are derived from equations presented in [9] and thread dimensions are taken from [10]:

$$\frac{A_{S,INTERNAL}}{L_E} = \pi\, n\, K_{NMAX}\left[\frac{1}{2\,n} + 0.57735\left(E_{SMIN} - K_{NMAX}\right)\right]$$

Where:

L_E = length of engagement = 3 threads = 0.375 in.

n = threads per inch = 8 in.

K_{NMAX} = maximum minor diameter of internal thread = 2.890 in.

E_{SMIN} = minimum pitch diameter of external thread = 2.9077 in.

$$\frac{A_{S,EXTERNAL}}{L_E} = \pi(8)(2.890)\left[\frac{1}{2(8)} + 0.57735(2.9077 - 2.890)\right]$$

$$= 5.282 \text{ in}^2/\text{in}$$

$$\frac{A_{S,INTERNAL}}{L_E} = \pi n D_{SMIN}\left[\frac{1}{2n} + 0.57735(D_{SMIN} - E_{NMAX})\right]$$

Where:

D_{SMIN} = minimum major diameter of external thread = 2.9824 in.

E_{NMAX} = maximum pitch diameter of internal thread = 2.9299 in.

$$\frac{A_{S,INTERNAL}}{L_E} = \pi(8)(2.9824)\left[\frac{1}{2(8)} + 0.57735(2.9824 - 2.9299)\right]$$

$$= 6.957 \text{ in}^2/\text{in.}$$

Therefore, the external thread governs the strength of the connection.

$$A_{S,EXTERNAL} = (5.282)(0.375)$$

$$= 1.981 \text{ in}^2$$

Conservatively taking all 5 baskets (only the base plate and payload weight is carried by the lower basket):

Total deadweight stacking load = 5 (W_b)

= 5 (3218)

= 16,090 lb.

The thread shear stress is:

$$F_{ST} = \frac{P_M}{A_{S,EXTERNAL}}$$

$$= \frac{16,090}{1.981}$$

= 8122 psi

$$\text{Ratio} = \frac{P_M}{0.6\ S_{M132}}$$

$$= \frac{8122}{0.6(16{,}700)} \quad = \quad 0.81$$

8.1.2 Lifting Load Condition

Section thru grapple interface.

$A_{p(min)} = 1.196\ in^2$

$$P_{m(lifting)} = \frac{Wt}{A_{p(\min)}} = \frac{3218}{1.196} = 2691 psi$$

$$\text{Ratio} = \frac{P_m}{\frac{1}{3}S_y} = \frac{2691}{7000} = 0.38$$

Section thru conical lip

$$P_{sl} = \frac{W_t}{A_{Lie}} = \frac{3218}{2.74} = 1{,}174 psi$$

$$\text{Ratio} = \frac{P_{SL}}{0.6\left(\frac{1}{3}SY\right)} = \frac{1174}{0.6(7000)} = 0.28$$

Shear Stress in Threaded Attachment

$$P_{ST} = \frac{W_t}{A_{thread}} = \frac{3218}{1.981} = 1624 psi$$

$$\text{Ratio} = \frac{P_{ST}}{0.6\left(\frac{1}{3}Sy\right)} = \frac{1624}{0.6(7000)} = 0.39$$

8.2 Support Rod

The support rods are loaded in compression by the deadweight stacking load.

d_r =1.31 in.

$$I_r = \frac{\pi(d_r)^4}{64}$$

$$I_r = 0.145 \ \ in^4$$

$K_r = 2.1$ Effective Length Factor, fixed-free, Reference 8

l_r = 26.687

$$r_r = \frac{d_r}{4}$$

$$r_r = 0.33 \ \ in.$$

$$A_r = 1.348 \ \ in^2$$

Using ASME NF 3322.1(c)(2)

$\frac{K_r l_r}{r_r} = 169.8$ > 120, use Eq. (6b)

$$F_a = S_{y132}\left[0.40 - \frac{K_r l_r / r_r}{600}\right]$$

$$F_a = 2315 \ \frac{lb}{in^2}$$

Conservatively assuming the bottom basket support rods carry the full weight of the four baskets above,

$$F_r = \frac{4(W_b)}{6(A_r)}$$

$$F_r = 1591 \ \frac{\text{lb}}{\text{in}^2}$$

$$\text{Ratio} = \frac{F_r}{F_a}$$

Ratio = 0.69 <1.0, ASME NF requirements met for support rods

The support rods are attached to the base plate with .625-11 flat head screws. Torque is applied to the limits of Reference (4.), Subsection NG-3232.2, the preload stress being limited to (1.2)0.9S_Y. For SA-193 material at 270° F, $S_Y = 3(S_M) = 3(11{,}600) = 34{,}800$ psi. The stress limit is therefore (1.2)(0.9)34,800 = 37,584 psi. The maximum allowed preload force is therefore

$$F = \sigma A_S = 8494 \text{ lb.}$$

The stripping of the thread in the support rod is checked for this loading:

$$\frac{A_{S,INTERNAL}}{L_E} = \pi n D_{SMIN}\left[\frac{1}{2n} + 0.57735\left(D_{SMIN} - E_{NMAX}\right)\right] \quad \text{Reference(9.)}$$

D_{SMIN} = minimum major diameter of external thread = .6113 in.

E_{NMAX} = maximum pitch diameter of internal thread = .5732 in

L_E = length of engagement = 2.50 (Length of bolt) - 1.20 (max thk. of base plate) = 1.30 inch

$$\frac{A_{S,INTERNAL}}{L_E} = \pi(11)\,(.6113)\left[\frac{1}{2(11)} + 0.57735(.6113 - .5732)\right]$$

$$= 1.425 \text{ in}^2/\text{in}$$

$$A_{S,INTERNAL} = 1.425\ (1.30)$$

$$= 1.85 \text{ in}^2$$

The allowable stress is 0.6 S_M = 0.6(16,700) = 10,020 psi

The stripping load is 1.85(10,020) = 18,500 lb. > 8494 lb. preload

Therefore stripping of the threads is not a concern.

From Reference 11, Table 4.1, the thread friction coefficient, k = 0.2. The calculated torque with d = 0.625 inches is:

$$T = Fkd/12 = 88 \text{ lb-ft.}$$

With an uncertainty of 30%, the torque should be limited to 68 lb-ft. The recommended torque is 60 ± 8 lb-ft.

The use of a clamped condition for the attachment of the support rod to the base plate is substantiated by applying the load at which the rod buckles to the extreme edge of the rod and ensuring the preload in the bolt is higher than the load induced by the resulting moment around the attachment interface of the rod to base plate.

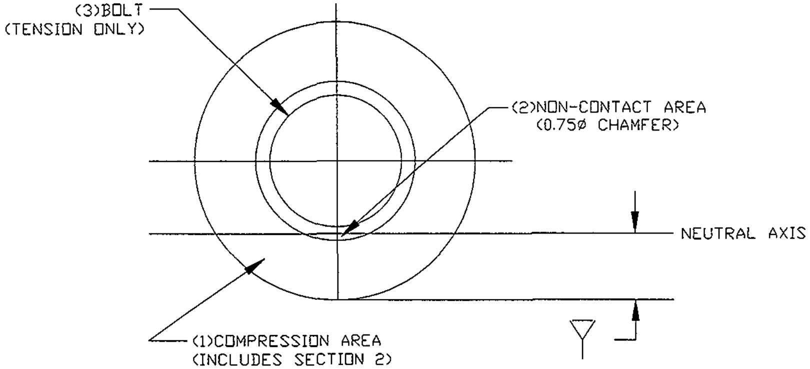

INTERFACE - SUPPORT ROD TO BASE PLATE

Section	Area	Y	AY	AY^2
1	0.3447	0.2331	0.0803	0.0187
2	-0.1130	0.4135	-0.0467	-0.0193
3	0.226	0.6550	0.1480	0.0969
$\Sigma\Rightarrow$	**0.4577**	-----	**0.1816**	**0.0963**

$Y = \Sigma AY / \Sigma A = 0.1816 / 0.4577 = 0.3966$ in.

$I = \Sigma AY^2 + \Sigma A(Y)^2 = 0.0963 - (0.4577)(0.3966)^2 = 0.0243$ in^4

The moment at the support rod to base plate interface with the applied load equal to the buckling load is:

M = 2315(buckling stress) x 1.348(rod area) x 0.3966(edge of rod to neutral axis)

= 1238 in-lb.

The applied load to the bolt is:

$P_{BOLT} = (Mc / I)(A_{BOLT})$ where c = distance from bolt centerline to neutral axis

$= [\ 1238\ (0.655 - 0.3966) / 0.0243\ ]\ (0.226) = 2975$ lb.

The minimum preload in the bolt is determined using the minimum applied torque and a 30% uncertainty factor:

Minimum preload = [(60 - 8)(12) / .2 (.625)] (1 - 30%) =3840 lb. > 2975 applied load

The connection satisfies the analytic assumption of a fixed end.

8.3 Bottom Plate

The bottom plate was evaluated for both the deadweight stacking condition inside the MCO and the lifting condition. These load conditions are evaluated in the subsections that follow.

8.3.1 Deadweight Stacking Load Condition

The critical bottom plate for this load condition is the second basket from the bottom with the bottom basket support rods rotated 30° relative to the support rods for the basket immediately above. It was conservatively assumed that the weight of the top three baskets is carried entirely by the support rods of the fourth basket. This configuration develops the maximum bending stress in the bottom plate.

For this load condition, the fourth basket support rods would each carry one-sixth of the weight of the top three baskets (single basket weight = 3212 lb per Appendix A of the Performance Spec.):

$$F_r = (3x3212)/6 = 806 \text{ lbs.}$$

The force is applied as an equivalent pressure over the area of the support rod in contact with the plate. The contact area and pressure will equal

$$\text{Area} = \tfrac{1}{4}(1.313^2 - 0.502^2)\pi = 1.16 \text{ in}^2$$

$$\text{Press} = 806/\text{Area} = 695 \text{ psi.}$$

In addition to the loading on the support rods, the bottom plate also carries the weight of the fuel rods in the basket. The fuel rod weight was applied as an equivalent pressure (Single rod weight = 55.4 lb per App. A of the Performance Spec.):

$$\text{Area} = \tfrac{1}{4}[(22.625)^2 - (3.00)^2]\pi - \tfrac{1}{4}(0.51)^2(108\pi) - \tfrac{1}{4}(1.313)^2(6\pi) = 364.8 \text{ in}^2$$

$$\text{Press} = 54(55.4)/\text{Area} = 8.20 \text{ psi.}$$

The equivalent pressure approach was judged to be conservative because it moves the center of loading radially outward, relative to the actual fuel support locations, resulting in higher bending moments at the maximum stress locations (outer ligaments, as shown below).

Due to the 30° symmetry, only one-twelfth of the basket was modeled. The 30° sector ANSYS finite element model of the Mark IV Storage Basket is shown in . The bottom plate was modeled using SHELL63 elements.

For the deadweight stacking load condition, the loading was comprised of a 695 psi downward vertical pressure on the area of the plate in contact with the support rod, a 8.20 psi downward pressure on the remainder of the bottom plate, and a 1.0g deadweight acceleration. The model was constrained vertically at the bottom outer corners of the support rod bolt hole (adjacent basket, below, support rod locations, 30° rotation,). The ANSYS input data for the deadweight stacking load case is provided in the pltstk.inp and plstk.out files.

The deadweight stacking load case results are summarized in the form of a stress intensity contour plot shown in Figure 3. Note that the higher stress intensity values occur near the support rod bolt hole on the top of the plate. The maximum stress intensity location is on circumference of the bolt hole near the rod constraints. As indicated in the legend, the maximum stress intensity is 19,180 psi. Away from the support points, the maximum stress drops to approximately 5,200 psi. From Table 3, the allowable primary membrane plus bending stress intensity is 25,100 psi, resulting is a stress ratio of 19,180/25,100 = 0.76 for the deadweight stacking load case. .

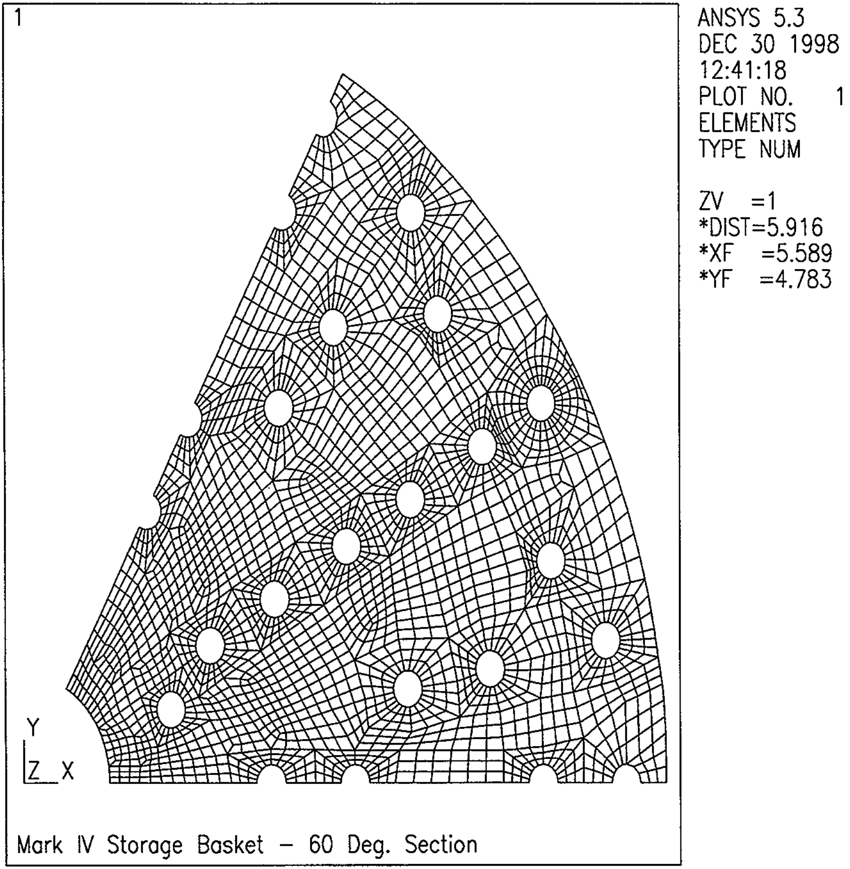

Figure 2. Sixty-Degree Sector Finite Element Model of the Mark IV Storage Basket.

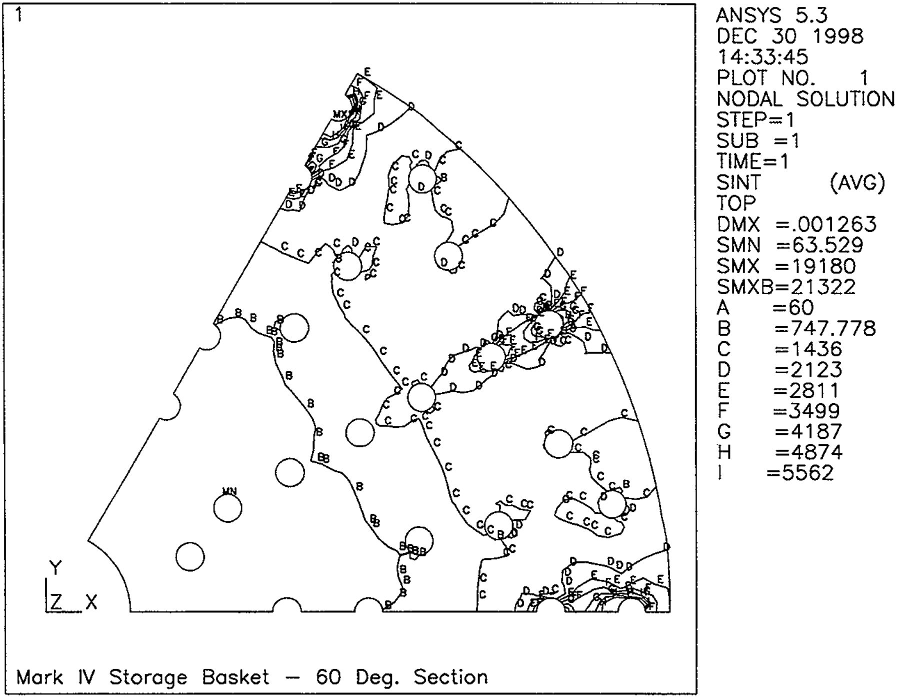

Figure 3. Stress Intensity Contour Plot, Deadweight Stacking Load Condition.

8.3.2 Lifting Load Condition

The Figure 4 ANSYS model was also used for the lifting load case, with boundary condition changes. The only constraint was a vertical constraint inside radius of the bottom plate (where the center pipe is threaded to the plate). The loading included 1.0g gravity loading and the 8.20 psi downward pressure representing the gravity loading from the fuel. The lifting load results are summarized in the stress intensity plot of Figure 6. Note that a maximum stress intensity of about 3529 psi occurred on the top of the plate at the inside radius of the plate. This maximum ligament stress is essentially all primary bending stress and is less than the allowable lifting stress of 7,013 ksi discussed in Section 6.1. The stress ratio is 3529/7013 = 0.50 for the lifting load case.

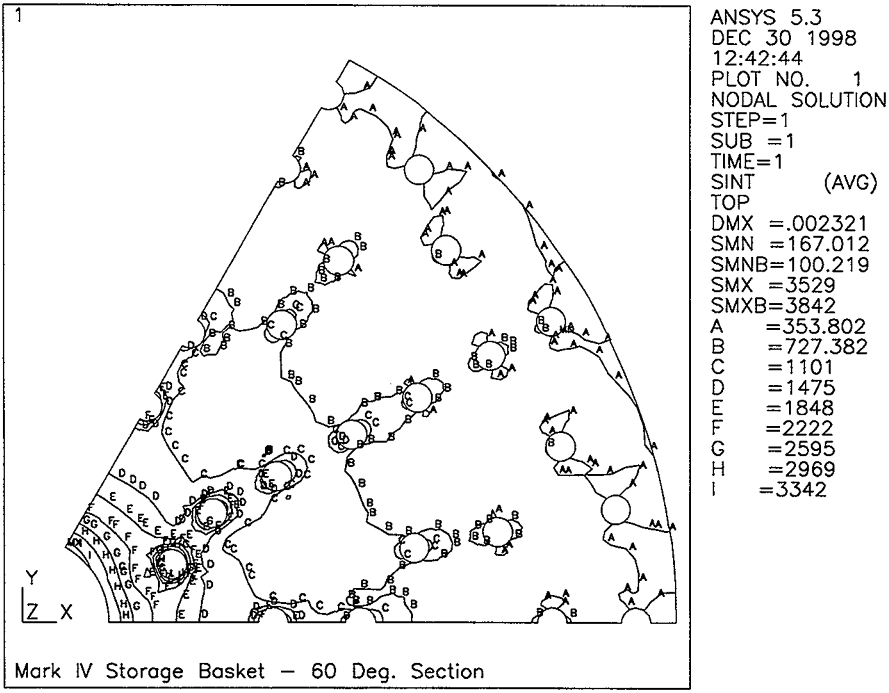

Figure 6. Stress Intensity Contour Plot, Lifting Load Condition.

8.4 Load Distribution and Basket Interface Considerations

When the baskets are stacked inside the MCO, the center pipe and support rod load distribution is very sensitive to the interface geometry. Reasonable fabrication tolerances will result in an imperfect fit, which will likely result in a three-point contact at the basket interface (three rods or two rods and the center pipe). There is also the possibility that the center pipe will carry the entire load.

Even for the case of a perfect fit, the stack loading will not be evenly shared between the center pipe and rods. Using the Figure 3 ANSYS model, the perfect fit load distribution was calculated by applying the fuel deadweight pressure to the bottom plate, and obtaining the reactions at the support rod and center pipe (ANSYS files: pltld.inp and pltld.out). From the ANSYS output, the support rod and center pipe reactions were 397 lb and 137 lb, respectively (534 lb total). The center pipe load ratio is 137/534 = 0.26. However, for the imperfect fit, the center pipe load ratio could range from zero to one.

In order to establish reasonable tolerances on the basket interface dimensions, capacity force/deflection response predictions were made for both a support rod and the center pipe. By knowing the force/deflection response, the effect of component length differences on the component load sharing can be evaluated. The capacity force/deflection response was obtained using the ANSYS plastic beam element (BEAM23), with large deflections/strain enabled. Buckling was initiated by assuming a 0.25-in. offset of the vertical load.

Assuming the top of the support rod is unrestrained laterally, the predicted support rod force/deflection response is shown in Figure 7 (ANSYS input/output files: rodb.inp/rodb.out). Assuming that three support rods are supporting four baskets above, the force per rod is 4(3177)/3 = 4236 lb. Note, from Figure 7, that a deflection of about 0.070 inches is achieved in a support rod before the load capacity drops below 4236 lb. A less conservative force/deflection rod response was obtained by using a gap/friction element on top of the rod to account for lateral constraint due to friction. Using a conservative friction coefficient of 0.1, the response shown in Figure 8 was obtained (ANSYS input/output files: rodbf.inp/rodbf.out). Note that a much higher capacity and deformation was obtained, when rod frictional constraint was considered.

The force/deflection response of the center pipe was also obtained as shown in Figure 9 (ANSYS input/output files: pipeb.inp/pipeb.out). Assuming that the bottom center pipe carries the full load from the four baskets above, the center pipe loading is 4(3177) = 12,710 lb, as shown in the figure. As indicated in the figure, the center pipe capacity is well in excess of the loading. Also note that with an 1/8-in. center pipe deflection, the plastic buckling mode has not been reached.

The above force/deflection results indicate that tight basket interface tolerances are not necessary. Conservatively using half of the 4236 lb deflection of 0.070 in. from Figure 7, fabrication height differences of 0.035 in., or smaller, are acceptable. It appears that the interface fabrication tolerance issue may be controlled by functional, rather than structural considerations. For example, a 0.035 in. height difference between the center pipe and support rods, results in a horizontal tipping distance of about 0.10 in.

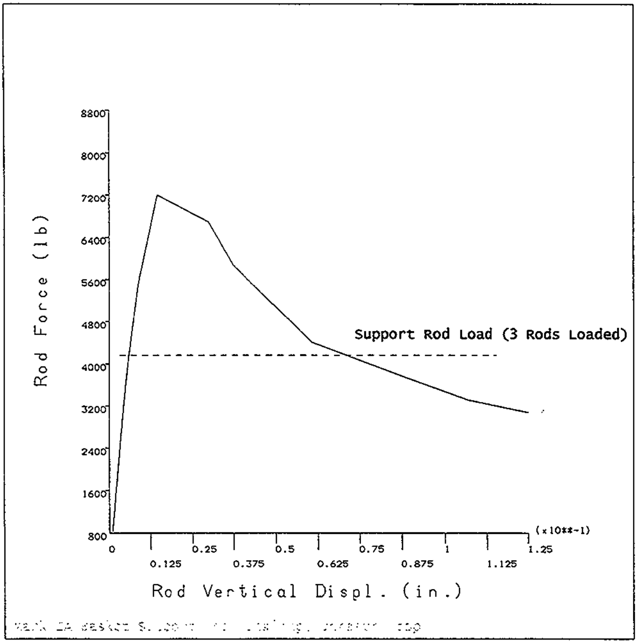

Figure 7. Force/Deflection Response of Support Rod, No Top Constraint.

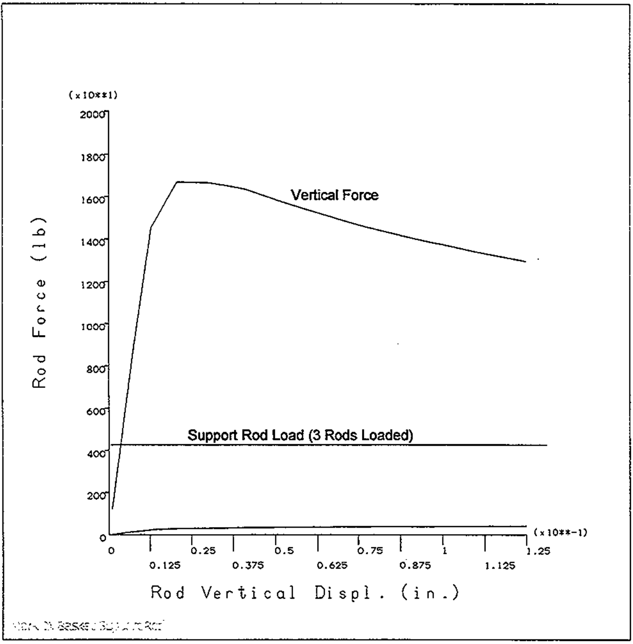

Figure 8. Support Rod Force/Deflection Response w/ Friction Constraint.

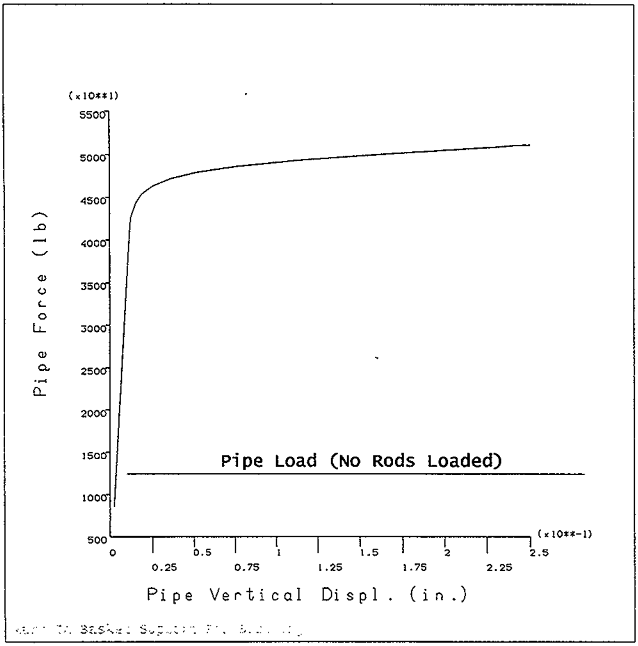

Figure 9. Center Pipe Force/Deflection Response.

8.5 Component Stress Results Summary

From the calculations above, a summary of the component stress analysis results was compiled into Table 5. Note that the predicted stresses are below allowables for all components.

Table 5. Summary of Mark IV Basket Structural Evaluation.

Item	Critical Load Condition	Stress Category	Maximum Stress (psi)	Allowable	Ratio
Center Pipe	Dead Weight Stacking	Buckling	3642	7972	0.46
Conical Lip	Dead Weight Stacking	Pure Shear	5869	10,020	0.59
Center Pipe Plate Threads	Dead Weight Stacking	Pure Shear	8122	10,020	0.81
Support Rod	Dead Weight Stacking	Buckling	1591	2315	0.69
Bottom Plate	Stacking	Pm+Pb	19,180	25,100	0.76
Bottom Plate	Lifting	Pm+Pb	3,529	7013	0.50

APPENDIX A

COMPUTER RUN OUTPUT SHEETS

AND

INPUT FILE LISTINGS

COMPUTER RUN COVER SHEET

Project Number: KH-8009-8
Computer Code: ANSYS®-PC
Software Version: 5.3
Computer System: MS Windows 95, Pentium® Processor
Computer Run File Number: KH-8009-8-06
Unique Computer Run File Name: Pltstk.inp
Run Description: Stress Analysis of the Mark IV Storage Basket Stacking Load Condition
Creation Date/Time: 15 December 1998/5:34:57pm

FOR MIKE COHEN 2/9/99
Prepared By: Michael E. Cohen Date

2/9/99
Checked By: Henry Averette Date

LISTING OF PLTSTK.INP FILE

```
/CLEAR
/batch,list
/filnam,pltstk
/PREP7
/title,Mark IV Storage Basket - 30 Deg. Section

/pbc,u,,1
/pbc,rot,,1
/psf,pres,norm,2

/com Define variables
THICK=1.2                    !Plate Thickness
fuel_prs=-55.4*54/364.8      !Uniform pressure load due to fuel
                             ! one rod weights 55.4 lbs
                             ! 54 rods
                             ! Area of plate (not including contact with rod is 364.8 sq in
rod_pres=-803/.578     !Pressure due to weight of 1/2 of 1 support rod
                             ! Weight of 3 basets = 3 X 3212 / 6 * 0.5
                             ! area of rod (annulus in contact with plate is 0.578 sq in

! Element Types
et,1,63                !Elastic Shell

! Real Properties
r,1,THICK

! Material Properties
dens,1,.2854
ex,1,26.5E+06
nuxy,1,.3

C*** Define model keypoints
K,1,1.299038,0.75
K,2,1.678334,0.968986
K,3,1.797003,1.0375
K,4,2.238676,1.2925
K,5,2.650038,1.53
K,6,3.0614,1.7675
K,7,3.503073,2.0225
K,8,3.933476,2.270994
K,9,4.178573,2.4125
K,10,4.620246,2.6675
K,11,5.031608,2.905
K,12,5.44297,3.1425
K,13,5.884643,3.3975
K,14,6.181983,3.56917
K,15,6.560142,3.7875
K,16,7.001815,4.0425
K,17,7.383678,4.262968
K,18,7.82454,4.5175
K,19,8.266212,4.7725
K,20,8.385,4.84
K,21,8.86312,5.117125
K,22,9.297432,5.367875
```

```
K,23,9.751024,5.629757
K,24,8.420579,1.620024
K,25,9.126139,1.755765
K,26,9.962306,1.916634
K,27,10.825,0.0
K,28,11.2595,0.0
K,29,8.820935,2.925787
K,30,9.002698,2.986076
K,31,9.486765,3.146634
K,32,9.954695,3.301841
K,33,10.463122,2.012986
K,34,11.056748,2.127193
K,35,1.48226,0.23
K,36,2.04,0.23
K,37,3.57,0.4
K,38,4.321527,0.47
K,39,5.090889,0.46
K,40,5.796214,0.45
K,41,6.58,0.45
K,42,8.4,0.45
K,43,9.091205,0.5
K,44,9.8152,0.62
K,45,10.5531,1.1124
K,46,11.2,1.36
K,47,9.355,0.0
K,48,9.8152,0.0
K,49,10.315,0.0
K,50,6.065,0.0
K,51,6.5,0.0
K,52,8.4,0.0
K,53,8.845,0.0
K,54,4.595,0.0
K,55,5.10658,0.0
K,56,5.555,0.0
K,57,1.5,0.0
K,58,3.650.0
K,59,4.085,0.0
K,60,6.04,0.755
K,61,6.790734,0.699125
K,62,7.65,0.9000
K,63,8.336293,0.977234
K,64,9.05,1.161342
K,65,10.380727,1.41
K,66,11.12533,1.733052
K,67,6.977051,1.342305
K,68,7.6,1.4
K,69,7.919763,1.523672
K,70,5.98,1.15
K,71,6.476235,1.245954
K,72,5.8,1.7
K,73,6.5645,1.9825
K,74,7.45,2.0
K,75,8.0101,2.2606
K,76,8.7799,2.4087
K,77,9.4059,2.5291
K,78,10.18,2.345
```

```
K,79,10.1410,2.6705
K,80,10.9016,2.8162
K,81,1.93,0.65
K,82,2.24,0.771
K,83,2.89,1.076424
K,84,3.511034,1.449746
K,85,4.15957,1.824178
K,86,4.639429,2.101225
K,87,5.262941,2.46121
K,88,5.901546,2.829909
K,89,6.4168,3.127391
K,90,7.020742,3.476077
K,91,7.62097,3.822619
K,92,8.28675,4.1
K,93,8.673966,4.430566
K,94,8.74,4.35
K,95,9.48,4.47
K,96,10.2,4.72
K,97,8.622258,3.467821
K,98,9.012646,3.693212
K,99,9.665924,4.070382
K,100,0.000,0.000
K,102,-3.555,21.459
K,103,-20.286,113.588
K,105,-5.045,56.040
K,107,-0.001,0.000
K,109,-43.189,313.953
K,112,-5.630,316.859
K,114,5.630,94.556
K,116,-135.988,245.510
K,117,9.205651,5.025344
K,119,10.160751,2.217914
K,120,10.257816,1.713831
K,121,9.321836,2.823292
K,123,8.171996,4.423658
K,124,9.161291,3.307317
K,125,6.907711,3.693722
K,126,5.791977,3.049552
K,127,5.804404,0.254939
K,129,4.332509,0.25489
K,130,2.145717,0.944382
K,131,3.409736,1.674164
K,132,4.532682,2.322599
K,134,9.096427,0.254975
K,135,10.566924,0.254982
K,136,6.673815,1.543598
K,137,8.118164,1.821488
K,138,8.214504,1.320731
K,139,6.77015,1.042869
K,140,2.017839,1.165
K,141,3.282236,1.895
K,142,4.399409,2.54
K,143,5.663806,3.27
K,144,6.780979,3.915
K,145,8.045376,4.645
K,146,9.080276,5.2425
```

```
K,147,9.244732,3.066355
K,148,6.726643,1.29413
K,149,8.170171,1.571848
K,150,10.212714,1.96481
K,151,4.34,0.0
K,152,5.81,0.0
K,153,9.1,0.0
K,154,10.57,0.0
K,155,9.5565,1.8386
K,156,9.6321,1.2458

C*** Define model line and arc segments for material 1
L,1,2
L,2,140
L,140,5
L,5,141
L,141,8
L,8,142
L,142,11
L,11,143
L,143,14
L,14,144
L,144,17
L,17,145
L,145,20
L,20,146
L,146,23
L,149,25
L,155,150
L,154,28
L,29,147
L,147,32
L,150,34
L,35,36
L,36,37
L,37,38
L,38,39
L,39,40
L,40,41
L,41,42
L,42,43
L,43,44
L,44,45
L,45,46
L,153,48
L,48,154
L,152,51
L,51,52
L,52,153
L,151,55
L,55,152
L,57,58
L,58,151
L,60,61
L,61,62
L,62,63
```

```
L,63,64
L,156,65
L,65,66
L,148,68
L,68,149
L,70,148
L,72,73
L,73,74
L,74,75
L,75,76
L,76,77
L,77,79
L,78,79
L,79,80
L,81,82
L,82,83
L,83,84
L,84,85
L,85,86
L,86,87
L,87,88
L,88,89
L,89,90
L,90,91
L,91,92
L,92,94
L,93,94
L,94,95
L,95,96
L,97,98
L,98,99
LARC,57,1,100,1.500
LARC,96,23,100,11.259
LARC,80,96,100,11.259
LARC,34,80,107,11.260
LARC,66,34,107,11.260
LARC,46,66,100,11.260
LARC,28,46,107,11.260
L,20,94
L,146,95
L,95,99
L,99,32
L,32,79
L,79,150
L,150,65
L,77,147
L,64,25
L,25,76
L,76,29
L,29,97
L,97,92
L,92,145
L,94,98
L,98,147
L,17,91
L,144,90
```

```
L,14,89
L,143,88
L,11,87
L,87,72
L,72,70
L,70,60
L,60,40
L,40,152
L,41,51
L,39,55
L,38,151
L,37,58
L,2,81
L,81,36
L,140,82
L,5,83
L,141,84
L,8,85
L,142,86
L,74,68
L,68,62
L,42,52
L,43,153
L,44,48
L,45,154
L,89,73
L,73,148
L,90,74
L,61,41
L,63,42
L,64,43
L,65,45  !
L,83,37
L,84,38
L,85,39
L,75,149
L,149,63
L,148,61
L,25,155
L,64,156
L,77,155
L,155,156
LATT,1,1,1
LSEL,U,LINE,,ALL
ALLS

C*** Define areas for ventilation holes and and support rod holes
KWPLAN,-1,    151,     55,     38
pcirc,.255                                    ! Vent holes have 0.51 in diameter
KWPAVE,    152
pcirc,.255
KWPAVE,    153
pcirc,.255
KWPAVE,    154
pcirc,.255
KWPAVE,    140
```

```
KWPLAN,-1,   140,     5,    130
pcirc,.255
KWPAVE,    141
pcirc,.255
KWPAVE,    142
pcirc,.255
KWPAVE,    143
pcirc,.255
KWPAVE,    144
pcirc,.255
KWPAVE,    145
pcirc,.255
KWPAVE,    146
pcirc,.251                                                  ! Support rod sits in hole w/ 0.502 in diameter
KWPAVE,    148
KWPLAN,-1,    148,     68,     73
pcirc,.255
KWPAVE,    149
pcirc,.255
KWPAVE,    150
pcirc,.255
KWPLAN,-1,    147,     32,     98
pcirc,.255
WPLANE,,0,0,0,1,0,0,0,1,0

/com Break up inner arc
FLST,2,1,4,ORDE,1
FITEM,2,76
FLST,3,1,4,ORDE,1
FITEM,3,22
LSBL,P51X,P51X, , ,KEEP

nummerg,kp

C*** Define Areas
AL,1,113,114,22,203
AL,2,115,59,113
AL,3,116,60,115
AL,4,117,61,116
AL,117,5,118,62
AL,6,119,63,118
AL,7,103,64,119
AL,8,102,65,103
AL,9,101,66,102
AL,10,100,67,101
AL,11,99,68,100
AL,12,96,69,99
AL,13,83,70,96
AL,14,84,72,83
AL,15,77,73,84
AL,22,23,112,40,204
AL,60,133,23,59,114
AL,61,134,24,133
AL,62,135,25,134
AL,64,104,105,106,107,26,135,63
AL,65,66,126,51,104
```

```
!AL,67,68,128,52,126
AL,67,128,52,126
AL,68,69,95,94,93,54,53,128
AL,70,97,74,95
AL,72,85,75,97
AL,75,86,20,98
AL,74,98,19,94
AL,73,78,58,87,86,85
AL,19,90,55,93
AL,20,87,56,90
AL,58,79,21,88
AL,24,111,41,112
AL,25,110,38,111
AL,26,108,39,110
AL,51,127,50,105
AL,50,138,42,106
AL,42,129,27,107
AL,27,109,35,108
AL,52,120,48,127
AL,48,121,43,138
AL,53,136,49,120
AL,49,137,44,121
AL,43,44,130,28,129
AL,28,122,36,109
AL,54,92,16,136
AL,16,91,45,137
AL,45,131,29,130
AL,29,123,37,122
AL,56,88,17,141
AL,17,89,46,142
AL,46,132,31,30,131,140
AL,30,124,33,123
AL,31,125,34,124
AL,32,82,18,125
AL,21,80,47,89
AL,47,81,32,132
AL,55,141,139,92
AL,139,142,140,91

!SUBTRACT AREAS FOR HOLES
FLST,2,2,5,ORDE,2
FITEM,2,17
FITEM,2,-18
ASBA,P51X,      5
FLST,2,2,5,ORDE,2
FITEM,2,19
FITEM,2,-20
ASBA,P51X,      6
FLST,2,2,5,ORDE,2
FITEM,2,21
FITEM,2,-22
ASBA,P51X,      7
FLST,2,2,5,ORDE,2
FITEM,2,23
FITEM,2,-24
ASBA,P51X,      8
```

```
FLST,2,2,5,ORDE,2
FITEM,2,25
FITEM,2,-26
ASBA,P51X,      9
FLST,2,2,5,ORDE,2
FITEM,2,27
FITEM,2,-28
ASBA,P51X,      10
FLST,2,2,5,ORDE,2
FITEM,2,29
FITEM,2,-30
ASBA,P51X,      11
FLST,2,4,5,ORDE,4
FITEM,2,41
FITEM,2,-42
FITEM,2,44
FITEM,2,-45
ASBA,P51X,      15
FLST,2,4,5,ORDE,4
FITEM,2,50
FITEM,2,-51
FITEM,2,54
FITEM,2,-55
ASBA,P51X,      12
FLST,2,4,5,ORDE,4
FITEM,2,56
FITEM,2,-57
FITEM,2,60
FITEM,2,-61
ASBA,P51X,      13
FLST,2,4,5,ORDE,4
FITEM,2,46
FITEM,2,64
FITEM,2,-65
FITEM,2,70
ASBA,P51X,      14
FLST,2,2,5,ORDE,2
FITEM,2,47
FITEM,2,-48
ASBA,P51X,      1
FLST,2,2,5,ORDE,2
FITEM,2,49
FITEM,2,53
ASBA,P51X,      2
FLST,2,2,5,ORDE,2
FITEM,2,63
FITEM,2,67
ASBA,P51X,      3
FLST,2,2,5,ORDE,2
FITEM,2,68
FITEM,2,-69
ASBA,P51X,      4

/com Combine little lines remaining after area subtraction
lcomb,208,159,0
lcomb,161,163,0
```

```
lcomb,164,167,0
lcomb,166,171,0
lcomb,169,175,0
lcomb,172,173,0
lcomb,196,215,0
lcomb,195,143,0
lcomb,145,147,0
lcomb,148,151,0
lcomb,183,176,0
lcomb,187,200,0
lcomb,180,202,0
lcomb,190,182,0
lcomb,192,193,0
!lcomb,209,191,0
lcomb,213,212
lcomb,155,150,0
lcomb,181,199,0
lcomb,210,211,0
lcomb,186,185,0
lcomb,216,196
lcomb,214,194
lcomb,127,138
lcomb,201,189

/com DEFINE NUMBER OF ELEMENTS ALONG LINES WHERE div IS THE NUMBER OF divISIONS
! Variables used for number of divisions
div=3
div2=3

lesize,all,,,div

lesize,77,,,div+div2
lesize,82,,,div+div2

lesize,205,,,2*div
lesize,159,,,2*div,.6

lesize,3,,,2*div,1.5
lesize,161,,,2*div,.6

lesize,5,,,2*div
lesize,164,,,2*div

lesize,7,,,2*div,1.5
lesize,166,,,2*div

lesize,9,,,2*div
lesize,169,,,2*div

lesize,11,,,2*div,2
lesize,172,,,2*div,1.5
lesize,69,,,div,1.4
lesize,99,,,div,2

lesize,96,,,2*div
lesize,174,,,div
```

```
lesize,88,,,2*div,2
lesize,143,,,2*div,0.5

lesize,111,,,2*div,1.9
lesize,145,,,2*div,0.4

lesize,108,,,2*div,1.9
lesize,148,,,2*div,0.5

lesize,123,,,2*div
lesize,150,,,div

lesize,185,,,2*div,1.8
lesize,187,,,2*div,0.6
lesize,184,,,div
lesize,105,,,div,0.6
lesize,90,,,2*div
lesize,182,,,2*div,1.5
lesize,120,,,div,0.5

lesize,189,,,2*div
lesize,212,,,2*div
lesize,210,,,2*div
lesize,127,,,2*div

lesize,196,,,2*div
lesize,136,,,2*div
lesize,192,,,2*div
lesize,194,,,2*div,.6

lesize,176,,,div
lesize,177,,,2*div
lesize,181,,,2*div
lesize,15,,,2*div
lesize,180,,,2*div

!LEGS
lesize,76,,,div2
lesize,206,,,div2
lesize,207,,,div2

lesize,2,,,div2
lesize,115,,,div2
lesize,160,,,div2

lesize,4,,,div2
lesize,117,,,div2
lesize,162,,,div2

lesize,6,,,div2
lesize,119,,,div2
lesize,165,,,div2

lesize,8,,,div2
lesize,102,,,div2
```

```
lesize,168,,,div2

lesize,10,,,div2
lesize,100,,,div2
lesize,170,,,div2

lesize,21,,,div2
lesize,17,,,div2
lesize,89,,,div2

lesize,41,,,div2
lesize,38,,,div2
lesize,144,,,div2

lesize,39,,,div2
lesize,35,,,div2
lesize,146,,,div2

lesize,20,,,div2
lesize,51,,,div2
lesize,19,,,div2
lesize,52,,,div2

lesize,50,,,div2
lesize,188,,,div2
!lesize,189,,,div2
lesize,48,,,div2

lesize,16,,,div2
lesize,36,,,div2

lesize,14,,,div2
lesize,178,,,div2
lesize,84,,,div2

div=3
lesize,60,,,div,1.1

! Concatenate lines for meshing around holes
LCCAT,59,113          !Semi-Circles
LCCAT,60,116
LCCAT,61,116
LCCAT,62,118
LCCAT,63,118
LCCAT,64,103
LCCAT,65,103
LCCAT,66,101
LCCAT,67,101
LCCAT,68,99
LCCAT,69,99
LCCAT,70,83
LCCAT,72,83
LCCAT,13,176
LCCAT,24,112
LCCAT,25,110
LCCAT,26,110
```

```
LCCAT,27,109
LCCAT,29,122
LCCAT,30,124
LCCAT,31,124
LCCAT,33,150

lccat,51,105   !Circles
lccat,52,120
lccat,42,106
lccat,43,121

lccat,53,120
lccat,54,92
lccat,45,91
lccat,44,121

lccat,56,141
lccat,58,79
lccat,80,47
lccat,46,142

lccat,94,74
lccat,75,86
lccat,87,56
lccat,55,93

!Further divide areas for meshing

LSTR,    91,    75
ASBL,    38,    220,,,KEEP

FLST,3,1,8
FITEM,3,-.121506936787,.418478241865E-01,
KL,    220,   .4121569573320922
LSTR,    97,    104

FLST,3,1,8
FITEM,3,-.269913607302,-.441304327785,
KL,    135,   .7083258400780824
LSTR,    111,    70

ASBL,    35,    222,,,KEEP
ASBL,    50,    221,,,KEEP

/com MESHING

eshape,2                ! Define element shapes as square
amesh,5,9               ! Mesh areas that are ready to be meshed
amesh,17,21
amesh,74,75
AMESH,1,2
AMESH,14
AMESH,46,48
AMESH,10,22,12
AMESH,3,49,46
amesh,23,30
```

```
amesh,11,13
amesh,15,45,15
amesh,41,42
amesh,44
amesh,72,73

lesize,221,,,div2   !Prepare and mesh areas 35 and 53
lesize,135,,,div2
lesize,225,,,2*div2
lccat,93,94
amesh,35
amesh,53

lesize,128,,,3*div2    !Prepare and mesh area 4
lccat,135,225
amesh,4

lesize,126,,,3*div2        !Prepare and mesh area 37
amesh,37

lesize,104,,,2*div2        !Prepare and mesh area 36
lccat,65,66
amesh,36

lesize,107,,,div2          !Prepare and mesh area 52
lesize,129,,,div2
amesh,52

lesize,224,,,3*div2-2      !Prepare and mesh area 51
lesize,222,,,2*div2
lccat,63,64
lccat,104,105
amesh,51

lesize,223,,,div2          !Prepare and mesh area 38
lccat,26,107
amesh,38

lesize,134,,,8                      !Prepare and mesh area 34
lccat,223,224
amesh,34

lesize,133,,,6,.65         !Prepare and mesh area 33
amesh,33

LESIZE,23, , ,6,.6         !Prepare and mesh area 32
LESIZE,114, , ,2,1,
lccat,59,60
amesh,32

lesize,203,,,5                      !Prepare and mesh area 16
lccat,113,114
amesh,16

lesize,40,,,9
lccat,22,23
```

```
amesh,31                         !Prepare and mesh area 31

amesh,39                         !Prepare and mesh area 39

lesize,85,,,1
amesh,40                         !Prepare and mesh area 40

lesize,28,,,6
lesize,36,,,6
lccat,43,44
amesh,58,59              !Prepare and mesh areas 58-59

amesh,62                         !Prepare and mesh area 62

lccat,140,46
lccat,30,31
amesh,66                         !Prepare and mesh area 66

lesize,81,,,3
amesh,71                         !Prepare and mesh area 71

! Divide area 43 into more areas and mesh it
FLST,3,1,8
FITEM,3,.597694620324,-.798913007197E-01,
KL,    78,  .4806523926516597
LSTR,    32,    122
ASBL,    43,    238,,,keep
lesize,238,,,3
lesize,239,,,3
lesize,240,,,4
lccat,85,86
amesh,50,54,4

! Delete the already meshed trapezoidal areas around the support rod hole
! and replace them with 1.313" diameter holes
K,500,9.080276,5.2425
kwpave,500
KWPLAN,-1,    500,    22,    117
pcirc,1.313/2
FLST,2,2,5,ORDE,2
FITEM,2,10
FITEM,2,22
ACLEAR,P51X
ADELE,    43
FLST,2,2,5,ORDE,2
FITEM,2,10
FITEM,2,22
FLST,3,2,4,ORDE,2
FITEM,3,241
FITEM,3,-242
ASBL,P51X,P51X
WPLANE,,0,0,0,1,0,0,0,1,0
FLST,2,2,4,ORDE,2
FITEM,2,241
FITEM,2,251
LCOMB,P51X, ,0
```

```
FLST,2,4,4,ORDE,4
FITEM,2,96
FITEM,2,176
FITEM,2,241
FITEM,2,247
LESIZE,P51X, , ,6,1,
FLST,2,3,4,ORDE,3
FITEM,2,245
FITEM,2,-246
FITEM,2,250
LESIZE,P51X, , ,3,1,
amesh,43

FLST,2,2,4,ORDE,2
FITEM,2,248
FITEM,2,-249
LESIZE,P51X, , ,2,1,
LCCAT,72,83
AMESH,55

FLST,2,2,4,ORDE,2
FITEM,2,176
FITEM,2,241
LESIZE,P51X, , ,8,1,
AMESH,56

FLST,2,1,4,ORDE,1
FITEM,2,252
LESIZE,P51X, , ,2,1,
FLST,2,1,4,ORDE,1
FITEM,2,77
LESIZE,P51X, , ,5,1,
FLST,2,2,4,ORDE,2
LCCAT,73,77
AMESH,57

!Define Components
!This is where the support rod is attached to the plate
ASEL,S,AREA,,43,56,13
CM,rod,AREA

!This is where the plate contacts the support rod from below
ksel,S,KP,,27,49,22
CM,support,KP

!This is where the plate contacts the support rod from below
LSEL,S,LINE,,203,204
CM,ctr_tube,LINE

!This is the areas of the plate not in contact with the support rod
alls
cmsel,u,rod
CM,plate,area
alls

/com Boundary Conditions
```

```
! Edges (symmetry conditions)
csys,1
nsel,s,loc,y,0  !0 deg edge
csys,1
nrotat,all
d,all,uy
d,all,rotx
d,all,rotz
nsel,s,loc,y,30           !30 deg edge
csys,1
nrotat,all
d,all,uy
d,all,rotx
d,all,rotz
nsel,all

! Center Tube constraint
csys,1
nsel,s,loc,x,1.49,1.51
csys,1
nrotat,all
d,all,rotx
d,all,roty
d,all,rotz
nsel,r,loc,y,0
!d,all,ux,0
alls

! Simply supported by the contact with the support rod below the plate
! rod is concentric with hole so it is supported by two nodes on most distant point on
! hole so max moment is calculated
cmsel,s,support
alls,below,kp
d,all,uz,0

save
finish

/solu
! Apply pressure load of baskets carried by rods
CMSEL,S,ROD
sfa,all,2,pres,rod_pres
alls

! Apply pressure load of fuel carried by plate
CMSEL,S,PLATE
sfa,all,2,pres,fuel_prs
alls

acel,,,1
solve
save
finish

/post1
set,last
```

```
esel,u,elem,,367,378,1
esel,u,elem,,385
esel,u,elem,,388
esel,u,elem,,389
esel,u,elem,,391
esel,u,elem,,392
esel,u,elem,,394
shell,top
prns,prin
shell,mid
prns,prin
shell,bot
prns,prin
save
finish
```

COMPUTER RUN COVER SHEET

Project Number:	KH-8009-8
Computer Code:	ANSYS®-PC
Software Version:	5.3
Computer System:	MS Windows 95, Pentium® Processor
Computer Run File Number:	KH-8009-8-06
Unique Computer Run File Name:	Pltstk.out
Run Description:	Stress Analysis of the Mark IV Storage Basket Stacking Load Condition
Run Date/Time:	15 December 1998/7:25:55pm

For M. Cohen 2/9/99

Prepared By: Michael E. Cohen Date

2/9/99

Checked By: Henry Averette Date

COMPUTER RUN COVER SHEET

Project Number:	KH-8009-8
Computer Code:	ANSYS®-PC
Software Version:	5.3
Computer System:	MS Windows 95, Pentium® Processor
Computer Run File Number:	KH-8009-8-06
Unique Computer Run File Name:	Pltlft.inp
Run Description:	Stress Analysis of the Mark IV Storage Basket Stacking Load Condition
Creation Date/Time:	15 December 1998/7:44:15pm

FOR M. COHEN 2/9/99

Prepared By: Michael E. Cohen Date

Henry A. Averette 2/9/99

Checked By: Henry Averette Date

REVISION	0	1	2		PAGE 55 OF 73
PREPARED BY / DATE	BW 4/17/97	ZGS 7/14/9	ZGS 02/09/99		
CHECKED BY / DATE	JN 4/17/97	HSA 7/14/9	HSA 02/09/99		

LISTING OF PLTLFT.INP FILE

```
/CLEAR
/batch,list
/filnam,pltlft
/PREP7
/title,Mark IV Storage Basket - 30 Deg. Section

/pbc,u,,1
/pbc,rot,,1
/psf,pres,norm,2

/com Define variables
THICK=1.2                    !Plate Thickness
fuel_prs=-55.4*54/364.8      !Uniform pressure load due to fuel
                             ! one rod weights 55.4 lbs
                             ! 54 rods
                             ! Area of plate (not including contact with rod is 364.8 sq in
!rod_pres=-803/.578     !Pressure due to weight of 1/2 of 1 support rod
                             ! Weight of 3 basets = 3 X 3212 / 6 * 0.5
                             ! area of rod (annulus in contact with plate is 0.578 sq in

! Element Types
et,1,63                 !Elastic Shell

! Real Properties
r,1,THICK

! Material Properties
dens,1,.2854
ex,1,26.5E+06
nuxy,1,.3

C*** Define model keypoints
K,1,1.299038,0.75
K,2,1.678334,0.968986
K,3,1.797003,1.0375
K,4,2.238676,1.2925
K,5,2.650038,1.53
K,6,3.0614,1.7675
K,7,3.503073,2.0225
K,8,3.933476,2.270994
K,9,4.178573,2.4125
K,10,4.620246,2.6675
K,11,5.031608,2.905
K,12,5.44297,3.1425
K,13,5.884643,3.3975
K,14,6.181983,3.56917
K,15,6.560142,3.7875
K,16,7.001815,4.0425
K,17,7.383678,4.262968
K,18,7.82454,4.5175
K,19,8.266212,4.7725
K,20,8.385,4.84
K,21,8.86312,5.117125
```

```
K,22,9.297432,5.367875
K,23,9.751024,5.629757
K,24,8.420579,1.620024
K,25,9.126139,1.755765
K,26,9.962306,1.916634
K,27,10.825,0.0
K,28,11.2595,0.0
K,29,8.820935,2.925787
K,30,9.002698,2.986076
K,31,9.486765,3.146634
K,32,9.954695,3.301841
K,33,10.463122,2.012986
K,34,11.056748,2.127193
K,35,1.48226,0.23
K,36,2.04,0.23
K,37,3.57,0.4
K,38,4.321527,0.47
K,39,5.090889,0.46
K,40,5.796214,0.45
K,41,6.58,0.45
K,42,8.4,0.45
K,43,9.091205,0.5
K,44,9.8152,0.62
K,45,10.5531,1.1124
K,46,11.2,1.36
K,47,9.355,0.0
K,48,9.8152,0.0
K,49,10.315,0.0
K,50,6.065,0.0
K,51,6.5,0.0
K,52,8.4,0.0
K,53,8.845,0.0
K,54,4.595,0.0
K,55,5.10658,0.0
K,56,5.555,0.0
K,57,1.5,0.0
K,58,3.650.0
K,59,4.085,0.0
K,60,6.04,0.755
K,61,6.790734,0.699125
K,62,7.65,0.9000
K,63,8.336293,0.977234
K,64,9.05,1.161342
K,65,10.380727,1.41
K,66,11.12533,1.733052
K,67,6.977051,1.342305
K,68,7.6,1.4
K,69,7.919763,1.523672
K,70,5.98,1.15
K,71,6.476235,1.245954
K,72,5.8,1.7
K,73,6.5645,1.9825
K,74,7.45,2.0
K,75,8.0101,2.2606
K,76,8.7799,2.4087
K,77,9.4059,2.5291
```

```
K,78,10.18,2.345
K,79,10.1410,2.6705
K,80,10.9016,2.8162
K,81,1.93,0.65
K,82,2.24,0.771
K,83,2.89,1.076424
K,84,3.511034,1.449746
K,85,4.15957,1.824178
K,86,4.639429,2.101225
K,87,5.262941,2.46121
K,88,5.901546,2.829909
K,89,6.4168,3.127391
K,90,7.020742,3.476077
K,91,7.62097,3.822619
K,92,8.28675,4.1
K,93,8.673966,4.430566
K,94,8.74,4.35
K,95,9.48,4.47
K,96,10.2,4.72
K,97,8.622258,3.467821
K,98,9.012646,3.693212
K,99,9.665924,4.070382
K,100,0.000,0.000
K,102,-3.555,21.459
K,103,-20.286,113.588
K,105,-5.045,56.040
K,107,-0.001,0.000
K,109,-43.189,313.953
K,112,-5.630,316.859
K,114,5.630,94.556
K,116,-135.988,245.510
K,117,9.205651,5.025344
K,119,10.160751,2.217914
K,120,10.257816,1.713831
K,121,9.321836,2.823292
K,123,8.171996,4.423658
K,124,9.161291,3.307317
K,125,6.907711,3.693722
K,126,5.791977,3.049552
K,127,5.804404,0.254939
K,129,4.332509,0.25489
K,130,2.145717,0.944382
K,131,3.409736,1.674164
K,132,4.532682,2.322599
K,134,9.096427,0.254975
K,135,10.566924,0.254982
K,136,6.673815,1.543598
K,137,8.118164,1.821488
K,138,8.214504,1.320731
K,139,6.77015,1.042869
K,140,2.017839,1.165
K,141,3.282236,1.895
K,142,4.399409,2.54
K,143,5.663806,3.27
K,144,6.780979,3.915
K,145,8.045376,4.645
```

```
K,146,9.080276,5.2425
K,147,9.244732,3.066355
K,148,6.726643,1.29413
K,149,8.170171,1.571848
K,150,10.212714,1.96481
K,151,4.34,0.0
K,152,5.81,0.0
K,153,9.1,0.0
K,154,10.57,0.0
K,155,9.5565,1.8386
K,156,9.6321,1.2458

C*** Define model line and arc segments for material 1
L,1,2
L,2,140
L,140,5
L,5,141
L,141,8
L,8,142
L,142,11
L,11,143
L,143,14
L,14,144
L,144,17
L,17,145
L,145,20
L,20,146
L,146,23
L,149,25
L,155,150
L,154,28
L,29,147
L,147,32
L,150,34
L,35,36
L,36,37
L,37,38
L,38,39
L,39,40
L,40,41
L,41,42
L,42,43
L,43,44
L,44,45
L,45,46
L,153,48
L,48,154
L,152,51
L,51,52
L,52,153
L,151,55
L,55,152
L,57,58
L,58,151
L,60,61
L,61,62
```

```
L,62,63
L,63,64
L,156,65
L,65,66
L,148,68
L,68,149
L,70,148
L,72,73
L,73,74
L,74,75
L,75,76
L,76,77
L,77,79
L,78,79
L,79,80
L,81,82
L,82,83
L,83,84
L,84,85
L,85,86
L,86,87
L,87,88
L,88,89
L,89,90
L,90,91
L,91,92
L,92,94
L,93,94
L,94,95
L,95,96
L,97,98
L,98,99
LARC,57,1,100,1.500
LARC,96,23,100,11.259
LARC,80,96,100,11.259
LARC,34,80,107,11.260
LARC,66,34,107,11.260
LARC,46,66,100,11.260
LARC,28,46,107,11.260
L,20,94
L,146,95
L,95,99
L,99,32
L,32,79
L,79,150
L,150,65
L,77,147
L,64,25
L,25,76
L,76,29
L,29,97
L,97,92
L,92,145
L,94,98
L,98,147
L,17,91
```

```
L,144,90
L,14,89
L,143,88
L,11,87
L,87,72
L,72,70
L,70,60
L,60,40
L,40,152
L,41,51
L,39,55
L,38,151
L,37,58
L,2,81
L,81,36
L,140,82
L,5,83
L,141,84
L,8,85
L,142,86
L,74,68
L,68,62
L,42,52
L,43,153
L,44,48
L,45,154
L,89,73
L,73,148
L,90,74
L,61,41
L,63,42
L,64,43
L,65,45  !
L,83,37
L,84,38
L,85,39
L,75,149
L,149,63
L,148,61
L,25,155
L,64,156
L,77,155
L,155,156
LATT,1,1,1
LSEL,U,LINE,,ALL
ALLS

C*** Define areas for ventilation holes and and support rod holes
KWPLAN,-1,    151,     55,     38
pcirc,.255                                  ! Vent holes have 0.51 in diameter
KWPAVE,    152
pcirc,.255
KWPAVE,    153
pcirc,.255
KWPAVE,    154
pcirc,.255
```

```
KWPAVE,    140
KWPLAN,-1,    140,      5,     130
pcirc,.255
KWPAVE,    141
pcirc,.255
KWPAVE,    142
pcirc,.255
KWPAVE,    143
pcirc,.255
KWPAVE,    144
pcirc,.255
KWPAVE,    145
pcirc,.255
KWPAVE,    146
pcirc,.251                                            ! Support rod sits in hole w/ 0.502 in diameter
KWPAVE,    148
KWPLAN,-1,    148,     68,      73
pcirc,.255
KWPAVE,    149
pcirc,.255
KWPAVE,    150
pcirc,.255
KWPLAN,-1,    147,     32,      98
pcirc,.255
WPLANE,,0,0,0,1,0,0,0,1,0

/com Break up inner arc
FLST,2,1,4,ORDE,1
FITEM,2,76
FLST,3,1,4,ORDE,1
FITEM,3,22
LSBL,P51X,P51X, , ,KEEP

nummerg,kp

C*** Define Areas
AL,1,113,114,22,203
AL,2,115,59,113
AL,3,116,60,115
AL,4,117,61,116
AL,117,5,118,62
AL,6,119,63,118
AL,7,103,64,119
AL,8,102,65,103
AL,9,101,66,102
AL,10,100,67,101
AL,11,99,68,100
AL,12,96,69,99
AL,13,83,70,96
AL,14,84,72,83
AL,15,77,73,84
AL,22,23,112,40,204
AL,60,133,23,59,114
AL,61,134,24,133
AL,62,135,25,134
AL,64,104,105,106,107,26,135,63
```

```
AL,65,66,126,51,104
!AL,67,68,128,52,126
AL,67,128,52,126
AL,68,69,95,94,93,54,53,128
AL,70,97,74,95
AL,72,85,75,97
AL,75,86,20,98
AL,74,98,19,94
AL,73,78,58,87,86,85
AL,19,90,55,93
AL,20,87,56,90
AL,58,79,21,88
AL,24,111,41,112
AL,25,110,38,111
AL,26,108,39,110
AL,51,127,50,105
AL,50,138,42,106
AL,42,129,27,107
AL,27,109,35,108
AL,52,120,48,127
AL,48,121,43,138
AL,53,136,49,120
AL,49,137,44,121
AL,43,44,130,28,129
AL,28,122,36,109
AL,54,92,16,136
AL,16,91,45,137
AL,45,131,29,130
AL,29,123,37,122
AL,56,88,17,141
AL,17,89,46,142
AL,46,132,31,30,131,140
AL,30,124,33,123
AL,31,125,34,124
AL,32,82,18,125
AL,21,80,47,89
AL,47,81,32,132 !@@@@@@@@@@@@@@
AL,55,141,139,92
AL,139,142,140,91

!SUBTRACT AREAS FOR HOLES
FLST,2,2,5,ORDE,2
FITEM,2,17
FITEM,2,-18
ASBA,P51X,      5
FLST,2,2,5,ORDE,2
FITEM,2,19
FITEM,2,-20
ASBA,P51X,      6
FLST,2,2,5,ORDE,2
FITEM,2,21
FITEM,2,-22
ASBA,P51X,      7
FLST,2,2,5,ORDE,2
FITEM,2,23
FITEM,2,-24
```

```
ASBA,P51X,      8
FLST,2,2,5,ORDE,2
FITEM,2,25
FITEM,2,-26
ASBA,P51X,      9
FLST,2,2,5,ORDE,2
FITEM,2,27
FITEM,2,-28
ASBA,P51X,     10
FLST,2,2,5,ORDE,2
FITEM,2,29
FITEM,2,-30
ASBA,P51X,     11
FLST,2,4,5,ORDE,4
FITEM,2,41
FITEM,2,-42
FITEM,2,44
FITEM,2,-45
ASBA,P51X,     15
FLST,2,4,5,ORDE,4
FITEM,2,50
FITEM,2,-51
FITEM,2,54
FITEM,2,-55
ASBA,P51X,     12
FLST,2,4,5,ORDE,4
FITEM,2,56
FITEM,2,-57
FITEM,2,60
FITEM,2,-61
ASBA,P51X,     13
FLST,2,4,5,ORDE,4
FITEM,2,46
FITEM,2,64
FITEM,2,-65
FITEM,2,70
ASBA,P51X,     14
FLST,2,2,5,ORDE,2
FITEM,2,47
FITEM,2,-48
ASBA,P51X,      1
FLST,2,2,5,ORDE,2
FITEM,2,49
FITEM,2,53
ASBA,P51X,      2
FLST,2,2,5,ORDE,2
FITEM,2,63
FITEM,2,67
ASBA,P51X,      3
FLST,2,2,5,ORDE,2
FITEM,2,68
FITEM,2,-69
ASBA,P51X,      4

/com Combine little lines remaining after area subtraction
lcomb,208,159,0
```

```
lcomb,161,163,0
lcomb,164,167,0
lcomb,166,171,0
lcomb,169,175,0
lcomb,172,173,0
lcomb,196,215,0
lcomb,195,143,0
lcomb,145,147,0
lcomb,148,151,0
lcomb,183,176,0
lcomb,187,200,0
lcomb,180,202,0
lcomb,190,182,0
lcomb,192,193,0
!lcomb,209,191,0
lcomb,213,212
lcomb,155,150,0
lcomb,181,199,0
lcomb,210,211,0
lcomb,186,185,0
lcomb,216,196
lcomb,214,194
lcomb,127,138
lcomb,201,189

/com DEFINE NUMBER OF ELEMENTS ALONG LINES WHERE div IS THE NUMBER OF divISIONS
! Variables used for number of divisions
div=3
div2=3

lesize,all,,,div

lesize,77,,,div+div2
lesize,82,,,div+div2

lesize,205,,,2*div
lesize,159,,,2*div,.6

lesize,3,,,2*div,1.5
lesize,161,,,2*div,.6

lesize,5,,,2*div
lesize,164,,,2*div

lesize,7,,,2*div,1.5
lesize,166,,,2*div

lesize,9,,,2*div
lesize,169,,,2*div

lesize,11,,,2*div,2
lesize,172,,,2*div,1.5
lesize,69,,,div,1.4
lesize,99,,,div,2

lesize,96,,,2*div
```

```
lesize,174,,,div

lesize,88,,,2*div,2
lesize,143,,,2*div,0.5

lesize,111,,,2*div,1.9
lesize,145,,,2*div,0.4

lesize,108,,,2*div,1.9
lesize,148,,,2*div,0.5

lesize,123,,,2*div
lesize,150,,,div

lesize,185,,,2*div,1.8
lesize,187,,,2*div,0.6
lesize,184,,,div
lesize,105,,,div,0.6
lesize,90,,,2*div
lesize,182,,,2*div,1.5
lesize,120,,,div,0.5

lesize,189,,,2*div
lesize,212,,,2*div
lesize,210,,,2*div
lesize,127,,,2*div

lesize,196,,,2*div
lesize,136,,,2*div
lesize,192,,,2*div
lesize,194,,,2*div,.6

lesize,176,,,div
lesize,177,,,2*div
lesize,181,,,2*div
lesize,15,,,2*div
lesize,180,,,2*div

!LEGS
lesize,76,,,div2
lesize,206,,,div2
lesize,207,,,div2

lesize,2,,,div2
lesize,115,,,div2
lesize,160,,,div2

lesize,4,,,div2
lesize,117,,,div2
lesize,162,,,div2

lesize,6,,,div2
lesize,119,,,div2
lesize,165,,,div2

lesize,8,,,div2
```

```
lesize,102,,,div2
lesize,168,,,div2

lesize,10,,,div2
lesize,100,,,div2
lesize,170,,,div2

lesize,21,,,div2
lesize,17,,,div2
lesize,89,,,div2

lesize,41,,,div2
lesize,38,,,div2
lesize,144,,,div2

lesize,39,,,div2
lesize,35,,,div2
lesize,146,,,div2

lesize,20,,,div2
lesize,51,,,div2
lesize,19,,,div2
lesize,52,,,div2

lesize,50,,,div2
lesize,188,,,div2
!lesize,189,,,div2
lesize,48,,,div2

lesize,16,,,div2
lesize,36,,,div2

lesize,14,,,div2
lesize,178,,,div2
lesize,84,,,div2

div=3
lesize,60,,,div,1.1

! Concatenate lines for meshing around holes
LCCAT,59,113            !Semi-Circles
LCCAT,60,116
LCCAT,61,116
LCCAT,62,118
LCCAT,63,118
LCCAT,64,103
LCCAT,65,103
LCCAT,66,101
LCCAT,67,101
LCCAT,68,99
LCCAT,69,99
LCCAT,70,83
LCCAT,72,83
LCCAT,13,176
LCCAT,24,112
LCCAT,25,110
```

```
LCCAT,26,110
LCCAT,27,109
LCCAT,29,122
LCCAT,30,124
LCCAT,31,124
LCCAT,33,150

lccat,51,105   !Circles
lccat,52,120
lccat,42,106
lccat,43,121

lccat,53,120
lccat,54,92
lccat,45,91
lccat,44,121

lccat,56,141
lccat,58,79
lccat,80,47
lccat,46,142

lccat,94,74
lccat,75,86
lccat,87,56
lccat,55,93

!Further divide areas for meshing

LSTR,     91,     75
ASBL,     38,     220,,,KEEP

FLST,3,1,8
FITEM,3,-.121506936787,.418478241865E-01,
KL,    220,   .4121569573320922
LSTR,     97,     104

FLST,3,1,8
FITEM,3,-.269913607302,-.441304327785,
KL,    135,   .7083258400780824
LSTR,     111,     70

ASBL,     35,     222,,,KEEP
ASBL,     50,     221,,,KEEP

/com MESHING

eshape,2                  ! Define element shapes as square
amesh,5,9                 ! Mesh areas that are ready to be meshed
amesh,17,21
amesh,74,75
AMESH,1,2
AMESH,14
AMESH,46,48
AMESH,10,22,12
AMESH,3,49,46
```

```
amesh,23,30
amesh,11,13
amesh,15,45,15
amesh,41,42
amesh,44
amesh,72,73

lesize,221,,,div2   !Prepare and mesh areas 35 and 53
lesize,135,,,div2
lesize,225,,,2*div2
lccat,93,94
amesh,35
amesh,53

lesize,128,,,3*div2    !Prepare and mesh area 4
lccat,135,225
amesh,4

lesize,126,,,3*div2       !Prepare and mesh area 37
amesh,37

lesize,104,,,2*div2       !Prepare and mesh area 36
lccat,65,66
amesh,36

lesize,107,,,div2         !Prepare and mesh area 52
lesize,129,,,div2
amesh,52

lesize,224,,,3*div2-2     !Prepare and mesh area 51
lesize,222,,,2*div2
lccat,63,64
lccat,104,105
amesh,51

lesize,223,,,div2         !Prepare and mesh area 38
lccat,26,107
amesh,38

lesize,134,,,8                     !Prepare and mesh area 34
lccat,223,224
amesh,34

lesize,133,,,6,.65        !Prepare and mesh area 33
amesh,33

LESIZE,23, , ,6,.6        !Prepare and mesh area 32
LESIZE,114, , ,2,1,
lccat,59,60
amesh,32

lesize,203,,,5                     !Prepare and mesh area 16
lccat,113,114
amesh,16

lesize,40,,,9
```

```
lccat,22,23
amesh,31                    !Prepare and mesh area 31

amesh,39                    !Prepare and mesh area 39

lesize,85,,,1
amesh,40                    !Prepare and mesh area 40

lesize,28,,,6
lesize,36,,,6
lccat,43,44
amesh,58,59           !Prepare and mesh areas 58-59

amesh,62                    !Prepare and mesh area 62

lccat,140,46
lccat,30,31
amesh,66                    !Prepare and mesh area 66

lesize,81,,,3
amesh,71                    !Prepare and mesh area 71

! Divide area 43 into more areas and mesh it
FLST,3,1,8
FITEM,3,.597694620324,-.798913007197E-01,
KL,     78,   .4806523926516597
LSTR,     32,     122
ASBL,     43,     238,,,keep
lesize,238,,,3
lesize,239,,,3
lesize,240,,,4
lccat,85,86
amesh,50,54,4

! Delete the already meshed trapezoidal areas around the support rod hole
! and replace them with 1.313" diameter holes
K,500,9.080276,5.2425
kwpave,500
KWPLAN,-1,     500,     22,     117
pcirc,1.313/2
FLST,2,2,5,ORDE,2
FITEM,2,10
FITEM,2,22
ACLEAR,P51X
ADELE,     43
FLST,2,2,5,ORDE,2
FITEM,2,10
FITEM,2,22
FLST,3,2,4,ORDE,2
FITEM,3,241
FITEM,3,-242
ASBL,P51X,P51X
WPLANE,,0,0,0,1,0,0,0,1,0
FLST,2,2,4,ORDE,2
FITEM,2,241
FITEM,2,251
```

```
LCOMB,P51X, ,0
FLST,2,4,4,ORDE,4
FITEM,2,96
FITEM,2,176
FITEM,2,241
FITEM,2,247
LESIZE,P51X, , ,6,1,
FLST,2,3,4,ORDE,3
FITEM,2,245
FITEM,2,-246
FITEM,2,250
LESIZE,P51X, , ,3,1,
amesh,43

FLST,2,2,4,ORDE,2
FITEM,2,248
FITEM,2,-249
LESIZE,P51X, , ,2,1,
LCCAT,72,83
AMESH,55

FLST,2,2,4,ORDE,2
FITEM,2,176
FITEM,2,241
LESIZE,P51X, , ,8,1,
AMESH,56

FLST,2,1,4,ORDE,1
FITEM,2,252
LESIZE,P51X, , ,2,1,
FLST,2,1,4,ORDE,1
FITEM,2,77
LESIZE,P51X, , ,5,1,
FLST,2,2,4,ORDE,2
LCCAT,73,77
AMESH,57

!Define Components
!This is where the support rod is attached to the plate
ASEL,S,AREA,,43,56,13
CM,rod,AREA

!This is where the plate contacts the support rod from below
ksel,S,KP,,27,49,22
CM,support,KP

!This is where the plate contacts the support rod from below
LSEL,S,LINE,,203,204
CM,ctr_tube,LINE

!This is the areas of the plate not in contact with the support rod
alls
cmsel,u,rod
CM,plate,area
alls
```

```
/com Boundary Conditions
! Edges (symmetry conditions)
csys,1
nsel,s,loc,y,0  !0 deg edge
csys,1
nrotat,all
d,all,uy
d,all,rotx
d,all,rotz
nsel,s,loc,y,30            !30 deg edge
csys,1
nrotat,all
d,all,uy
d,all,rotx
d,all,rotz
nsel,all

! Center Tube constraint
csys,1
nsel,s,loc,x,1.49,1.51
csys,1
nrotat,all
d,all,rotx,0
d,all,roty,0
d,all,rotz,0
d,all,uz,0
nsel,r,loc,y,0
!d,all,ux,0
alls

save
finish

/solu

! Apply pressure load of fuel carried by plate
CMSEL,S,PLATE
sfa,all,2,pres,fuel_prs
alls

acel,,,1
solve
save
finish

/post1
set,last
shell,top
prns,prin
shell,mid
prns,prin
shell,bot
prns,prin
save
finish
```

PARSONS

CLIENT:	DE&S Hanford	**FILE NO:**	KH-8009-8-06
PROJECT:	MCO Final Design	**DOC NO:**	HNF-SD-SNF-DR-003, Rev. 2 Appendix 8

COMPUTER RUN COVER SHEET

Project Number:	KH-8009-8
Computer Code:	ANSYS®-PC
Software Version:	5.0A
Computer System:	MS-DOS, Pentium® Processor
Computer Run File Number:	KH-8009-8-06
Unique Computer Run File Name:	Pltlft.out
Run Description:	Stress Analysis of the Mark IV Storage Basket Stacking Load Condition
Run Date/Time:	15 December 1998/7:47:37pm

FOR M. COHEN 2/9/99

Prepared By: Michael E. Cohen Date

Henry A. Averette 2/9/99

Checked By: Henry Averette Date

REVISION	0	1	2		**PAGE 73**
PREPARED BY / DATE	BW 4/17/97	ZGS 7/14/9	ZGS 02/09/99		**OF 73**
CHECKED BY / DATE	JN 4/17/97	HSA 7/14/9	HSA 02/09/99		

PARSONS

CALCULATION PACKAGE

FILE NO: KH-8009-8-07
DOC. NO: HNF-SD-SNF-DR-003, Rev. 2 , Appendix 9
PAGE 1 of 12

PROJECT NAME:
MCO Final Design

CLIENT:
Duke Engineering & Services Hanford, Inc.

CALCULATION TITLE:

STRESS ANALYSIS OF THE MARK IV SCRAP BASKET

PROBLEM STATEMENT OR OBJECTIVE OF CALCULATION:

PERFORM A STRESS ANALYSIS OF THE MARK IV SCRAP BASKET IN ACCORDANCE WITH REVISION 5 OF THE MCO PERFORMANCE SPECIFICATION. TWO LOADS ARE CONSIDERED:

1. LIFTING
2. DEADWEIGHT

CRITERIA ARE BASED ON THE ASME CODE.

REVISION 1 REFLECTS THE MATERIAL CHANGES MADE TO THE BASKET. AT THE REQUEST OF THE CLIENT, THE SHROUD AND DIVIDER PLATES ARE NOW FABRICATED OUT OF COPPER. ADDITIONAL COMPONENTS SUCH AS A FINES DIVIDER TUBE AND SUPPORT RODS ARE ADDED.

REVISION 2 CHANGES THE DESIGN OF THE BASKET'S CENTER POST ATTACHMENT TO THE BOTTOM PLATE TO A THREADED DESIGN.

DOCUMENT REVISION	AFFECTED PAGES	REVISION DESCRIPTION	PREPARED BY INITIALS / DATE	CHECKED BY INITIALS / DATE	APPROVED BY INITIALS / DATE
0	1-52	Initial Issue	Bob Winkel	Joe Nichols	Charles Temus
1	1-17	Reflected material changes. Added components and modified calculations as necessary. Eliminated ANSYS Analysis (pg. 18-52 deleted)	Zachary Sargent	Ian McInnes	Charles Temus
2	1-13	Revised design from welded to threaded center post, correcte minor errors and eliminated reference to ANSI N14.6.	2/12/99	D Barlow DB 2/12/99	2/12/99

TABLE OF CONTENTS

LIST OF TABLES

1. INTRODUCTION

This calculation documents the evaluation of the Mark IV scrap basket for lifting and deadweight loads. The evaluations are performed based on the criteria of the ASME Code.

2. REFERENCES

1. "Performance Specification for the Spent Nuclear Fuel Multi-Canister Overpack," Specification HNF-S-0426, Revision 5 , December 1998.
2. "K-Basin Spent Nuclear Fuel Scrap Basket", Prepared for U.S.D.O.E. (Richland Operations) by DE&S Hanford, Drawing Number H-2-828075, Revision 1.
3. ASME Boiler and Pressure Vessel Code, Section II - Materials, Part D - Properties, 1998 Edition.
4. ASME Boiler and Pressure Vessel Code, Section III, Subsection NG, "Core Support Structures", 1998 Edition.
5. ASME Boiler and Pressure Vessel Code, Section III, Subsection NF, "Component Supports", 1998 Edition.
6. Not used
7. Roark, Raymond J., & Young, Warren C., "Formulas for Stress and Strain", 5th Edition, McGraw-Hill Book Company, New York, 1975.
8. AISC, 1989, *Manual of Steel Construction, Ninth Edition,* American Institute of Steel Construction, Chicago, Illinois
9. "MCO Mark IV SNF Scrap Basket", Drawings No. H-2-828075 & "K-Basin SNF Scrap Basket Mark 1A" Drawings No. H-2-828065, Revision 3.

3. ASSUMPTIONS

As noted in analysis.

4. GEOMETRY

The primary components of the Mark IV scrap basket, as defined in the Reference 2 drawing, are as listed in Table 1:

Table 1
Mark IV Scrap Basket Geometry

Component	Description
Center Pipe	Tubular Section with Outside diameter of 2.75 inches and a nominal wall thickness of 0.50". The Center Pipe is attached to the bottom plate through a conical lip tightened with a 3.00 -8 Class 2 thread. Section Properties are: $A = \frac{\pi}{4}\left(OD^2 - ID^2\right)$ $= \frac{\pi}{4}\left((2.75\,in)^2 - (1.75\,in)^2\right)$ $= 3.53\,in^2$ $I = \frac{\pi}{64}\left(OD^4 - ID^4\right)$ $= \frac{\pi}{64}\left((2.75\,in)^4 - (1.75\,in)^4\right)$ $= 2.35\,in^4$ $r = \sqrt{I/A}$ $= \sqrt{2.35\,in^4 / 3.53\,in^2}$ $= .815\,in$
Bottom Plate	The bottom plate is a 1.20" thick plate with 1/2" diameter holes (pattern shown on drawing).

Shroud	The shroud is 0.125 in. thick copper. The OD of the shroud is 22.625 in. and is 26.40 in. high. Other section properties are: $ID = OD - 2t$ $= 22.625\,in - 2(0.125\,in)$ $= 22.375\,in$ $IR = ID/2$ $= 11.19\,in$ $A = \frac{\pi}{4}\left(OD^2 - ID^2\right)$ $= \frac{\pi}{4}\left((22.625\,in)^2 - (22.375\,in)^2\right)$ $= 8.84\,in^2$
Support Posts	There are 6 support posts located 60° apart around the periphery of the bottom plate. The posts are stainless steel and have a minimum diameter of 1.31 in.
Fines Divider Tube	The fines divider tube is rolled copper plate. It is 26.25 in. high and is 0.125 in. thick. When rolled its outer diameter is 7.85 in.
Stiffener Plates	There are 6 copper radial stiffener plates connecting the fines divider tube to the shroud. The stiffener plates are 0.25 in. thick copper and 26.25 in. high.
Bottom Screen	The bottom screen is stainless steel and is sandwiched between the bottom plate and the stiffener plates.
Shroud to Bottom Plate Connection	The shroud is fastened to the bottom plate by means of a screws similar to the shroud attachment in the MK1A scrap basket.

5. MATERIAL PROPERTIES

The Mark IV scrap basket structural components may be fabricated from Type 304L or Type 304 stainless steel. Only Type 304L material properties are used in this analysis to preserve conservatism. The non-structural shroud, divider plates and fines divider tube are all fabricated from copper to enhance the heat transfer properties of the basket.

For this analysis, only elastic modulus and allowable stress values are needed. Values are taken from Section II, Part D of the Code (See [3]) and are listed in Table 2.

Table 2
ASME Code Material Properties for Type 304L Stainless Steel

Temperature		E	S_m	S_y	S_u
°F	°C	Table TM-1, Group G	Table 2A, p. 322	Table Y-1, p. 524	Table U, P. 441
-20	--	--	16.7 ksi	25.0 ksi	70.0 ksi
70	--	28.3E+06	--	--	--
100	--	--	16.7 ksi	25.0 ksi	70.0 ksi
200	--	27.6E+06	16.7 ksi	21.3 ksi	66.2 ksi
212	100	27.5E+06	16.7 ksi	21.0 ksi	65.6 ksi
270	132	27.2E+06	16.7 ksi	19.8 ksi	62.5 ksi
300	--	27.0E+06	16.7 ksi	19.1 ksi	60.9 ksi

Notes 1: Underlined values determined by linear interpolation, all other values taken from Section II, Part D of the ASME Code.
2: Value of E taken from Table TM-1 for Material Group G.

6. ACCEPTANCE CRITERIA

This calculation considers (1) lifting loads and (2) deadweight loads. Criteria for each are described below

6.1 Lifting Loads

Per Section 4.12.3 of the MCO Specification (See [1]), the basket design is "shall meet the safety factors of 3 material yield and 5 on material ultimate strength". Furthermore, "these safety factors apply from 5°C to 132°C". Thus criteria is equivalent to an allowable stress of the lesser of $S_y/3$ or $S_u/5$. At the maximum lifting temperature of 100°C, the allowables are:

$$\frac{S_y}{3} = \frac{21.0ksi}{3} = 7.00ksi$$

$$\frac{S_u}{5} = \frac{65.6ksi}{5} = 13.10ksi$$

$$\Rightarrow use: P_m + P_b \leq 7.00ksi$$

6.2 Deadweight Loads

Per Section 4.12.3 of [1], all baskets must be able to support the fuel at 1.0g while at 132°C. The specification does not provide criteria for the Mark IV baskets under these loads, thus the normal (Level A) condition criteria of Subsection NG will be used. As described in the following paragraphs, the criteria of NG is supplemented by the criteria of Subsection NF for the center pipe. For membrane and membrane plus bending stresses the allowable stresses of Table 3 are applied.

In addition to self weight, the Mark IV scrap basket must be able to support the weight of 4 additional Mark IV baskets. Under these compressive loads, stability of the basket must be evaluated.

Table 3
Allowable Stresses - Deadweight

Temperature		S_m	Design/Level A Stress Limits		
			P_m	P_L	$(P_m$ or $P_L) + P_b$
°F	°C	[Table 2]	(Sm)	(1.5 Sm)	(1.5 S_m)
270	132	16.7 ksi	16.7 ksi	25.1 ksi	25.1 ksi

Notes 1: Design & Level A Stress Limits from NG 3221 & NG-3222, respectively.
2: Axial compressive stresses must be limited to established in accordance with one of the following:
- NG-3133.3 (external pressure)
- NG-3133.6 (axial compression on cylindrical shells)
- NF-3322.1(c) (column type members)

3: Pure shear is limited to $0.6S_M$ per NG-3227.2.2

7. LOAD CONDITIONS & COMBINATIONS

The Mark IV scrap baskets are evaluated for two load cases:

1. Lifting of the basket and contents while at 100°C. This loading is evaluated using criteria based on the safety factors listed in Section 6.1 above.
2. Deadweight of the basket and contents while at 132°C. The basket inside the MCO is considered the limiting case. The basket may be at the top of the MCO (and thus be required to support only its own weight) or at the bottom of the MCO where it is required to support the dead load of 4 added baskets.

No other loads are considered. Section 4.12.2 of the performance specification (See [1]) exempts the Mark IV baskets from consideration of drop, or other accident loads.

8. STRESS ANALYSIS - HAND CALCULATIONS

The Mark IV scrap basket is evaluated using the results of the MK IV Storage Basket, as evaluated in Appendix 8.

8.1 Center Pipe, Support Rods, Bottom Plate, Center to Bottom Plate Attachment

The structural portion of the Mark IV Scrap Basket is identical to the Mark IV Storage Basket. The weight of the Mark IV Scrap Basket is less than the weight of the Mark IV Storage Basket, therefore the stresses in the Mark IV Scrap Basket are bounded by the analysis results of the Mk IV Storage Basket as evaluated in Appendix 8 and no further analysis is required.

8.2 Basket Subassembly

Since the basket subassembly, shroud and dividers are fabricated from copper (non ASME Code material), and their connecting welds are not structural welds, no analysis is required. Welds shall be inspected using surface visual examination.

8.3 Shroud to Bottom Plate Connection

The shroud is fastened to the bottom plate by screws is a pattern identical to the MK 1A scrap basket. This attachment was evaluated in Appendix 7, Section 8.4.1 and no further analysis is required.

8.4 Thermal Expansion

As stated above, the shroud, divider plates and fines divider tube are fabricated out of copper and the bottom plate out of type 304L stainless steel. Since copper has a higher coefficient of thermal expansion than stainless steel, a thermal expansion analysis must be performed. An evaluation is performed for a temperature difference of 200°F (going from 70°F to 270°F). This thermal analysis is provided for information and operational duties since the copper components are non-structural items.

8.4.1 Vertical Expansion

For the stainless steel plate :

$\alpha_{ss} = 9.70 \times 10^{-6}$ in/in/°F	Stainless steel coefficient of thermal expansion
$\Delta T = 200°F$	Temperature differential
$L_{ss} = 1.20$ inches	Bottom plate height
$\Delta L_{ss} = \alpha_{ss} L_{ss} \Delta T = 0.002$ in.	Vertical expansion of bottom plate

<u>For the copper shroud:</u>

$\alpha_{cu} = 10.0 \times 10^{-6}$ in/in/°F	Copper coefficient of thermal expansion
$\Delta T = 200°F$	Temperature differential
$L_{cu} = 26.4$ inches	Shroud height
$\Delta L_{cu} = \alpha_{cu} L_{cu} \Delta T = 0.053$ in.	Vertical expansion of copper shroud

Therefore, the total vertical thermal expansion for the stainless steel and the copper at the circumference of the basket is:

$$\Delta L = \Delta L_{cu} + \Delta L_{ss} = 0.055 \text{ inches}$$

The stainless steel post has a vertical thermal growth of

$$L_{cp} = 27.8 \text{ inches}$$

$$\Delta L_{cp} = \alpha_{ss} L_{cp} \Delta T = 0.054 \text{ inches}$$

One can conclude that there is no differential expansion between the center post and the shroud. Therefore, the one-half inch vertical gap left for the center post expansion is adequate to ensure no interference fit between the shroud and the bottom plates of the adjacent baskets.

8.4.2 Radial Expansion

<u>For the stainless steel plate :</u>

$\alpha_{ss} = 9.70 \times 10^{-6}$ in/in/°F	Stainless steel coefficient of thermal expansion
$\Delta T = 200°F$	Temperature differential
$R_{plate} = 11.31$ inches	Bottom plate outside radius
$\Delta L_{ss} = \alpha_{ss} R_{plate} \Delta T = 0.022$ in.	Radial expansion of bottom plate

<u>For the copper shroud:</u>

$\alpha_{cu} = 10.0 \times 10^{-6}$ in/in/°F	Copper coefficient of thermal expansion

$\Delta T = 200°F$ Temperature differential

$R_{shroud} = 11.31$ inches Shroud outside radius

$\Delta L_{cu} = \alpha_{cu} R_{shroud} \Delta T = 0.023$ in. Radial expansion of copper shroud

The copper shroud is expected to expand radially 0.023 inches while the stainless steel MCO shell and basket bottom plate are expected to expand by approximately 0.022 inches. As these values are very comparable, the fabrication gaps will remain open and no undetermined loads will be applied to the MCO shell from unexpected basket expansion loads.

PARSONS

CALCULATION PACKAGE

FILE NO: KH-8009-8-08
DOC NO: HNF-SD-SNF-DR-003 Rev. 2, Appendix 10
PAGE 1 of 35

PROJECT NAME: MCO Design
CLIENT: DE&S Hanford, Inc.

CALCULATION TITLE:

Stress Analysis of the Shield Plug Interface Components

PROBLEM STATEMENT OR OBJECTIVE OF CALCULATION:

Perform a stress analysis of the shield plug interface components (process valves, process port cover plates and bolts, process filter attachment welds, rupture disc holders) in accordance with Revision 5 of the MCO performance specification. Torque recommendations for the cover plate bolts and process valves are also addressed.

Three loading conditions are considered:

1. Design Pressure of 450 psig
2. Preload Torque on Cover Plate Bolts and Process Valves
3. Thermal Expansion Differences at Design Temperature of 132°C
4. Critical Drop Loading (Horizontal) of 101 g's

Criteria are based on Subsection NB of Section III of the ASME Code.

DOCUMENT REVISION	AFFECTED PAGES	REVISION DESCRIPTION	PREPARED BY INITIALS / DATE	CHECKED BY INITIALS / DATE	APPROVED BY INITIALS / DATE
0	1-35	Initial Issue	Bob Winkel	Charles Temus	Charles Temus
1	1-32	Revised to reflect increase in design pressure from 150 psig to 450 psig and decrease in design temperature from 375°C to 132°C	Henry Averette	Zachary Sargent	Charles Temus
2	All	Revised to reflect changes from Revision 5 of the MCO Performance Specification	HSA 2/8/99	2/8/99 ZGS	2/9/99

TABLE OF CONTENTS

LIST OF FIGURES

LIST OF TABLES

1. INTRODUCTION

This calculation documents the evaluation of the MCO process port cover plates, cover plate bolts, process valves, and the process filter attachment welds. The special process valves containing rupture discs are included in the evaluation. The structural adequacy evaluation is based upon Subsection NB of Section III of the ASME Code (Reference 3). Component loading includes preload from torquing of bolts and process valve bodies, design pressure, and drop loading.

2. REFERENCES

1. *Performance Specification for the Spent Nuclear Fuel Multi-Canister Overpack*, HNF-S-0426, Duke Engineering and Services Hanford, Richland, Washington. Revision 5, December 1998.

2. ASME, 1998, *ASME Boiler and Pressure Vessel Code, Section II, Materials, Part D--Properties*, American Society of Mechanical Engineers, New York, New York.

3. ASME, 1998, *ASME Boiler and Pressure Vessel Code, Section III, Subsection NB*, American Society of Mechanical Engineers, New York, New York.

4. Roark, R. J. and Young, W. C., 1975, *Formulas for Stress and Strain*, 5th Edition, McGraw-Hill, New York, New York.

5. Baumeister, T., editor, 1967, *Standard Handbook for Mechanical Engineers,* 7th Edition, McGraw-Hill, New York, New York.

6. Parsons, 1997, "Stress Analysis of the Mark 1A Storage and Scrap Baskets," Calculation No. KH-8009-8-05, Parsons Infrastructure and Technology Group, Inc., Richland, Washington.

7. Bickford, J. H., 1990, *An Introduction to the Design and Behavior of Bolted Joints,* 2nd Edition, Marcel Dekker, Inc., New York City, New York.

8. Shigley, J. E. and Mischke, C. R., *Mechanical Engineering Design*, 5th Edition, McGraw-Hill, New York, New York.

9. IFI, 1988, *Fastener Standards*, 6th Edition, Industrial Fasteners Institute, Cleveland, Ohio.

10. Horton, H. L., 1974, Machinery's Handbook, 19th Edition, Industrial Press, Inc., New York, New York.

3. ASSUMPTIONS

1. Preloads from torquing the cover plate bolts and process valves are assumed to be accurate to within +30% and -35%. This range is assumed to include the standard preload/torque uncertainties, including operator and tool inaccuracies. A "Never-Seize" lubricant is assumed for the preload/torque calculations, using "Nut-Factor" values from Reference 7. It is conservatively assumed that the maximum temperature during torque application (insertion and removal) is the design temperature of 132°C. It is also assumed that the Reference 7 nut factors are not affected by temperature. As discussed in Section 8.1.4, the adequacy of the uncertainty range and the mean nut factor, for the cover plate bolts and process valves must be verified by test.

2. It is assumed that the threaded process valve bodies can be appropriately evaluated as bolts, relative to the ASME Code design stress limits.

3. It is assumed that the torquing tool, used for inserting and preloading the rupture disc type process plug, will extend beyond the holes in the hex head. That is, the hex head minimum cross section, at the vent holes, will not experience the full torque during torquing operations.

4. Some of the dimensions of the rupture disc valve (e.g. rupture disc outside diameter) are based upon a specific rupture disc manufacturer. Since the dimensions are vendor dependent, some of the calculations may need to be modified, depending on the final rupture disc manufacturer selected.

5. Other assumptions as noted within the calculation documentation.

4. GEOMETRY

The geometry of the shield plug interface components are defined on the assembly drawing (H-2-828041), the shield plug drawing (H-2-828045), the process plug valve drawing (H-2-828047), the cover plate/bolt drawing (H-2-828048), and the process filter drawing (H-2-828049). The structural components are identified in Figure 1. There are three process ports and one plugged port in the shield plug. The structural components of the port closures are identical, except some of the cover plates have four bolts and some have five. Only the weaker four-bolt configurations are analyzed in this report. The purpose of the cover plates is to provide secondary containment for the process valve seals, and to protect the valves during handling operations.

The top of the process valve bodies consists of a hex head used for torquing the threaded valve bodies into the four shield plug port holes. Sealing for both the process valves and the cover plates is achieved using a C-seal requiring a minimum seating load of 300 lb/in.

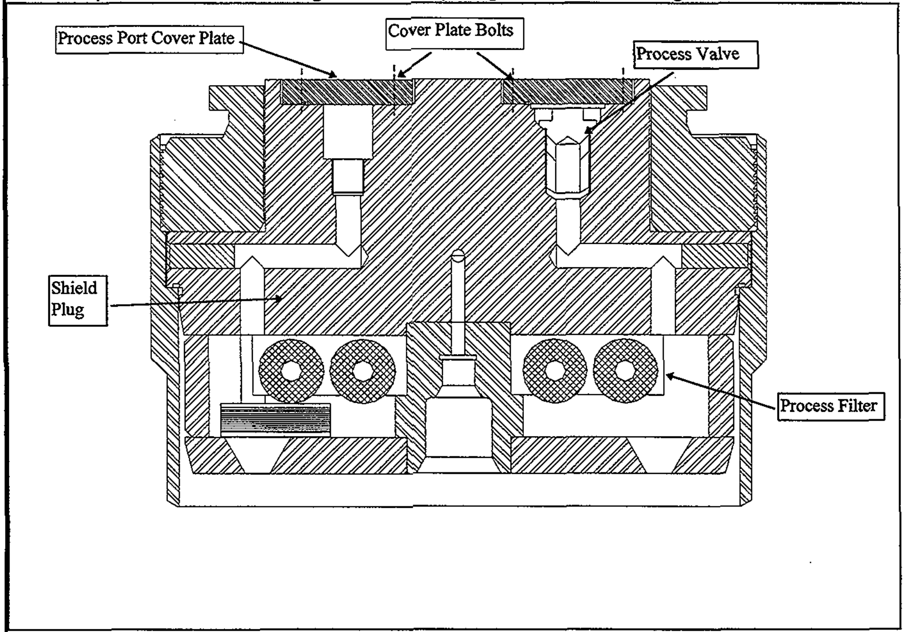

Figure 1. Shield Plug Interface Component Geometry.

The process filter is welded to the bottom of the shield plug as shown. The filter details are not specified by the drawing because it is being supplied by others. Only the 1/8-in. filter attachment welds are evaluated by this calculation. A bounding filter assembly weight of 50 lb is specified by the Reference 1 Performance Specification.

The process valve bodies (with the exception of the valve containing the rupture disc) are identical in the thread region. The valve at Port 2 contains an internal hex recess to operate the valve.

The rupture disc type valve bodies are two pieces which are welded together by a full-circumference structural fillet weld. This weld is considered a socket weld. The critical loading for this weld is the torque applied during insertion and removal.

A plugged port has a threaded portion (1-1/16—12 thread) which is smaller than the 1-7/8-in process valve threads and is also addressed in the calculations below.

5. MATERIAL PROPERTIES

The materials included in the shield plug interface components are listed in Table 1. The structural properties of interest for F304L Stainless Steel are provided in Table 2 and properties for Type 304L Stainless Steel are provided in Table 3. The cover plate bolt and process valve material properties at the MCO design temperature of 132°C are listed in Table 4. It is noted that the process valves are constructed from SA-193, Grade B8S or B8SA. Since the valve bodies function much like a bolt (external threads, hex head, provide preload to seal), they were evaluated using ASME rules for bolts.

Since the process filters are being designed by others, process filter material properties are not addressed. The process filters will be welded to the 304L shield plugs. Therefore, the 304L base material allowables, Table 3, were applied to the attachment welds.

Table 1. Material Listing for Shield Plug Interface Components

Component	Material	ASME Spec No.
Shield Plug, Process Port Cover Plate	304L SS	SA-182
Cover Plate Bolts	18Cr-8Ni-4Si-N	SA-193-B8S or B8SA
Process Valves	18Cr-8Ni-4Si-N	SA-193-B8S or B8SA
Process Port Cover Plate	304L SS	SA-240 or SA-479

Table 2. ASME Code Material Properties for Type F304L Stainless Steel(SA-182, t > 5in.)

Temperature		E	S_M	S_Y	S_U
°F	°C	Table TM-1, Group G	Table 2A, page 322	Table Y-1, page 524	Table U, page 441
70	—	**28.3E+06**	**16.6 ksi**	**25.0 ksi**	**65.0 ksi**
100	—	—	**16.6 ksi**	**25.0 ksi**	**65.0 ksi**
200	—	**27.6E+06**	**16.6 ksi**	**21.3 ksi**	**61.5 ksi**
212	**100**	**27.5E+06**	**16.6 ksi**	**21.0 ksi**	**60.9 ksi**
270	**132**	**27.2E+06**	**16.6 ksi**	**19.8 ksi**	**58.0 ksi**
300	—	**27.0E+06**	**16.6 ksi**	**19.1 ksi**	**56.5 ksi**

Note: Underlined values determined by linear interpolation, all other values taken from Section II, Part D of the ASME Code.

Table 3. ASME Code Material Properties for Type 304L Stainless Steel (SA-240 or SA-479)

Temperature		E	S_M	S_Y	S_U
°F	°C	Table TM-1, Group G	Table 2A, page 322	Table Y-1, page 524	Table U, page 441
70	—	**28.3E+06**	**16.7 ksi**	**25.0 ksi**	**70.0 ksi**
100	—	—	**16.7 ksi**	**25.0 ksi**	**70.0 ksi**
200	—	**27.6E+06**	**16.7 ksi**	**21.3 ksi**	**66.2 ksi**
212	**100**	**27.5E+06**	**16.7 ksi**	**21.0 ksi**	**65.6 ksi**
270	**132**	**27.2E+06**	**16.7 ksi**	**19.8 ksi**	**62.5 ksi**
300	—	**27.0E+06**	**16.7 ksi**	**19.1 ksi**	**60.9 ksi**

Note: Underlined values determined by linear interpolation, all other values taken from Section II, Part D of the ASME Code.

Table 4. ASME Design Temperature Material Properties for Cover Plate Bolts and Process Valves.

Material	Elastic Modulus, psi (270°F)	S_m, psi (270°F)
SA 193 Grade B8S or B8SA (Bolting)	27.2 x 10^6	11,600

Note: For F304L, 304L, SA193 Grade B8S or B8SA materials, the mean coefficient of thermal expansion from 70°F to 270°F is 8.94 x 10-6 in/in/°F [2] Table TE-1.

6. ACCEPTANCE CRITERIA

For the process port valves, cover plates, and cover plate bolts, the design load condition is 450 psi design pressure at 132°C combined with the preload necessary to seat the seal. Critical loading for strength considerations is the peak preload caused by the maximum torque and the highest preload to torque factor. Torsional stresses in the process valve bodies are also addressed. It is conservatively assumed that the preload is applied at the full design temperature, since the valves will be tightened and loosened during processing operations. For the process filter attachment welds, the critical loading is the 101g horizontal drop.

Since the Performance Specification [1] specifies that the MCO is to be designed to the requirements of Subsection NB of the ASME Code, the ASME Code requirements are also used as the acceptance criteria for the shield plug interface components. All of the interface components are part of the MCO pressure boundary with the exception of the process filter attachment welds. For the process filter attachment welds, it is assumed that the inspection will be limited to a visual examination and appropriate weld quality factors from Subsection NG are applied. The full design temperature allowables are conservatively applied to the attachment weld evaluation.

As mentioned in Sections 3 and 5, since the process valves are constructed in the form of a bolt, and are required to maintain the preload on the pressure boundary seal, ASME bolt stress limits are applied to the process valve bodies.

A rupture disc is included in one of the process valve designs, which results in a two-piece design assembled with a seal weld at the edge of the disc and a structural fillet weld. The structural weld is subjected to both torque loading and the design pressure. The weld is performed using an electron beam process weld which has to be UT examined. The Subsection NG weld quality factors are applied to the rupture disc valve structural weld, assuming a surface only dye penetrant examination. As indicated in the calculations below, the resulting design margin is large, which minimizes potential concerns relative to the structural adequacy of the rupture disc valve structural weld.

7. LOAD CONDITIONS AND COMBINATIONS

It is expected that the initial attachment of the process valves and cover plates to the shield plug will be conducted at room temperature. For later processing operations, torquing of both the cover plate bolts and process valves may occur at higher temperatures. To cover the possibility of torquing operations at higher temperatures, it is conservatively assumed that torquing could occur at the full design temperature of 132°C. Another conservative assumption is that the maximum torque to the process valves could occur simultaneously with the full design pressure, e.g. when the break away torque is applied during valve opening.

As stated in Section 6, the critical loading for the process valves and cover plate bolts is the maximum torquing preload at the design temperature. Due to the relative size of these components, the vertical drop inertia loading is less than the pressure loading. For the more severe horizontal drop, the parts bear against the sides of shield plug holes (cover plate sits in a recess). Appendix F of the ASME Code does not limit bearing stresses. Thus, only the filter attachment welds are evaluated for the drop loading.

8. STRESS ANALYSIS CALCULATIONS

The shield plug interface components structural evaluations were limited to hand calculations. Calculation details for each component follows below.

8.1 Process Port Cover Plate and Bolts

Calculation Parameters:

$n_b := 4$	Minimum number of bolts
$A_b := \frac{\pi}{4} \cdot (.490 \cdot \mathrm{in})^2$	Bolt area above threads (Root area = 0.202 in^2)
$A_b = 0.189 \cdot \mathrm{in}^2$	
$A_{et} := 0.998 \cdot \frac{\mathrm{in}^2}{\mathrm{in}}$	5/8-11 UNC thread stripping area, Reference 9
$A_{it} := 1.42 \cdot \frac{\mathrm{in}^2}{\mathrm{in}}$	Internal thread stripping area, Reference 9
$l_{thread} := 0.50 \cdot \mathrm{in}$	Bolt thread length
$d_s := 3.555 \cdot \mathrm{in}$	Outside diameter of seal
$t_p := 1.00 \cdot \mathrm{in}$	Plate thickness
$d_b := 0.625 \cdot \mathrm{in}$	Nominal bolt diameter
$d_{bc} := 4.375 \cdot \mathrm{in}$	Diameter of bolt circle
$f_{sp} := 300 \cdot \frac{\mathrm{lb}}{\mathrm{in}}$	Minimum seal preload, see Appendix 14
$pres := 450 \cdot \frac{\mathrm{lb}}{\mathrm{in}^2}$	Design pressure

$S_{mb}, S_{mv} := 11,600 \cdot \frac{lb}{in^2}$ SA 193 B8S or B8SA bolt material, Sm, @ design temp. = 270°F

$S_{mp} := 16600 \frac{lb}{in^2}$ F304L forging, @ design temperature = 270°F

$S_{mc} := 16700 \frac{lb}{in}$ 304L (Cover Plates) @ design temperature = 270°F

$\alpha_p := 8.94 \cdot 10^{-6} \frac{in}{in \cdot R}$ 304L mean thermal expansion coefficient, 70 to 270°F

$\alpha_b := 8.94 \cdot 10^{-6} \frac{in}{in \cdot R}$ SA 193 Gr B8S or B8SA bolt expansion coefficient, 70 - 270°F

$E_b := 27.2 \cdot 10^6 \cdot \frac{lb}{in^2}$ SA 193 Gr B8S or B8SA bolt, Elastic Modulus, 270°F

$K_{min} := 0.11$ Minimum nut factor, "Never-Seize" lubricant, Table 5.1 of Reference 7

$K_{max} := 0.21$ Maximum nut factor, Reference 7

$K_{mean} := 0.17$ Mean nut factor, Reference 7.

Note that Type 304 is also acceptable as an alternate to 304L for the cover plates.

8.1.1 Cover Plate Bolts

Bolt Area Requirement (See Appendix E, ASME Code):
Appendix E requires that a bolt have sufficient area to carry the required seal load plus the pressure loading.

$H := \frac{\pi}{4} \cdot d_s^2 \cdot pres$ Pressure load

$H = 4.467 \cdot 10^3 \cdot lb$

$H_p := \pi \cdot d_s \cdot f_{sp}$ Minimum preload to seat the seal

$H_p = 3.351 \cdot 10^3 \cdot lb$

$A_{req} := \frac{H + H_p}{S_{mb}}$

$A_{req} = 0.674 \cdot in^2$

$Ratio := \frac{A_{req}}{n_b \cdot A_b}$

$Ratio = 0.892$ Adequate Bolt Area for preload + pressure

Check Bolt Adequacy for In-Service Loads:

The ASME Code requires that the maximum in-service bolt stress not exceed 2 Sm.

1) Thermal Loading

As the thermal expansion coefficient is the same for the bolt and the cover plate, there is no relative thermal loading. $\sigma_{bth} = 0$

2) Preload

Torque, per bolt, required to assure required minimum preload (f_{sp}) on seal and maintain the pressure load:

$$T_{in} = \left(\frac{H + H_P}{n_b}\right)(K_{mean})(d_b)$$

$$= \frac{4467 + 3351}{4}(0.17)\left(\frac{.625}{12}\right)$$

$$= 17.3 \text{ lb.ft.}$$

Maximum preload per bolt for a torque of T_{in}: (See Section 8.4)

$T_{max} = 17 + 2 = 19$ lb.ft.

Use $K_{min} = 0.11$

$$P_{\text{bolt (max)}} = \frac{T_{max}}{(.11)(.625)}(12)$$

$$= 3316 \text{ lb.}$$

Maximum combined in-service stress in bolts:

$$S_{btot} = \frac{P_{bolt(max)}}{A_b}$$

$$= \frac{3316}{0.189}$$

$$= 17{,}547 \text{ psi}$$

Comparing the total in-service stress to the allowable of $2S_m$:

$$\text{Ratio} := \frac{\sigma_{btot}}{2 \cdot S_m}$$

Ratio = 0.756 Cover bolts OK for in-service loading

CHECK BOLT THREAD STRIPPING:

$S_m = 11{,}600$ psi Bolt stress allowable

$$S_{thread} = \frac{P_{bolt(max)}}{(A_{et})(l_{thread})}$$ Thread stress, bolt

$$= \frac{3316}{(0.998)(0.50)}$$

$$= 6645 \frac{\text{lb}}{\text{in}^2}$$

$$\text{Ratio} = \frac{\sigma_{\text{tread}}}{0.6S_{\text{mp}}}$$

Ratio = 0.955

8.1.2 Cover Plate Evaluation

Consider a simply-supported circular plate having a diameter equal to the bolt-circle diameter (Reference 4, Table 24):

$$\nu := 0.3$$

$$M_{\text{max}} := \frac{\text{pres}\cdot\left(\frac{d_{\text{bc}}}{2}\right)^2\cdot(3+\nu)}{16}$$

$$M_{\text{max}} := 444.1\cdot\text{lb}\cdot\frac{\text{i}}{\text{i}}$$

$$\sigma_{\text{p}} := 6\cdot\frac{M_{\text{max}}}{t_{\text{p}}^{\;2}}$$

$$\sigma_{\text{p}} := 2665\cdot\frac{\text{lb}}{\text{in}^2}$$

$$\text{Ratio} := \frac{\sigma_{\text{p}}}{1.5\cdot S_{\text{mp}}}$$

Ratio = 0.106

Thus, the cover plate has a large margin, relative to Code allowables.

8.2 Process Valve Plug Evaluation. H-2-828047 Item 6 & 7

The process valve plug is threaded and was evaluated using bolt requirements (NB-3230).

Parameter Definitions:

$d_p := 1.875 \cdot in$ Valve nominal diameter (1 7/8-12 UN-2A Thread)

$l_{thread} := 1.555 \cdot i$ Valve thread engagement length

$A_{vsol} := 2.53 \cdot in^2$ Tensile area of valve/bolt (solid), Reference 10

$d_{eff} := \sqrt{\frac{A_{vsol} \cdot 4}{\pi}}$ Valve plug effective outside diameter

$d_{eff} = 1.795 \cdot in$

$d_h := 0.64 \cdot i$ Valve plug radial hole diam. (3 holes @ 120 degrees)

$d_i := 1.00 \cdot in$ Valve plug inside diameter

$$A_{vnet} := A_{vsol} - \frac{\pi \cdot d_i^2}{4} - 3 \cdot d_h \cdot \left(\frac{d_{eff} - d_i}{2}\right)$$

$A_{vnet} := 0.981 \cdot in^2$ Valve plug net area @ radial holes

$S_{mv} := 11600 \cdot \frac{lb}{in^2}$ SA-193, Gr B8S or B8SA, Sm @ design temp. (270°F)

$E_v := 27.2 \cdot 10^6 \cdot \frac{lb}{in^2}$ Valve plug modulus of elasticity & design temp. (270°F)

$press := 450 \frac{lb}{in^2}$

$d_s := 2.00 \cdot in$ Conservative seal diameter

Required Valve Plug Area:

Per ASME Code requirements, bolt (valve plug) area must be sufficient to carry the required seal load plus the design pressure load (450 psig).

$$H := \frac{\pi}{4} \cdot d_s^{\,2} \cdot pres$$ Pressure load

$$H = 1413.7 \text{ lb}$$

$$H_p := \pi \cdot d_s \cdot f_{sp}$$ Minimum preload to seat seal

$$H_p = 1.885 \cdot 10^3 \cdot \text{lb}$$

$$A_{req} := \frac{H + H_p}{S_{mv}}$$

$$A_{req} := 0.284 \text{ in}^2$$

$$Ratio := \frac{A_{req}}{A_{vnet}}$$

$$Ratio = 0.290$$ Net area of plug is adequate for axial loading

Check Valve Plug Adequacy for In-Service Loads

1) Thermal Loading

There is no thermal loading in the valve plug since the expansion coefficients for the valve and shield plug are the same.

2) Preload

Torque required to maintain required minimum preload (f_{sp}) on seal and restrain pressure:

$$T_{in} = \left(H + H_p\right)\left(K_{mean}\right)\left(\frac{d_p}{12}\right)$$

= 88 lb.ft.

Maximum preload:

Use $K_{min} = 0.11$

T_{max} = 105 lb.ft. (See Section 8.4)

$$P_{max} = \frac{(T_{max})(12)}{(K_{min})(d_p)}$$

$$= \frac{(105)(12)}{(0.11)(1.875)}$$

$$= 6109 \text{ lb.}$$

Maximum combined in-service stress in plug:

$$\sigma_{btot} = \frac{P_{max}}{A_{vnet}}$$

$$= \frac{6109}{.981}$$

$$= 6227 \, \frac{\text{lb.}}{\text{in}^2}$$

Comparing the total in-service stress to the allowable of $2S_m$:

$$\text{Ratio} := \frac{\sigma_{btot}}{2 \cdot S_{mv}}$$

Ratio = .268 Process valve plug meets Code bolt stress requirements

Because the valve plug net area is small relative to the thread engagement length, the axial stress obviously controls relative to thread stripping. Therefore, thread stripping calculations were not performed.

Check Valve Plug Adequacy for Torque Loading (Thread Zone):

Conservatively assume that the minimum cross-section of the valve plug experiences the full torque. A reasonable value of the shear stress produced by this torque can be obtained from Reference 8, p. 752, for a hollow shaft with two holes:

$d_h := 0.64 \cdot i$ Hole diameter

$d_{heff} := d_h \cdot \sqrt{1.5}$

$d_{heff} := 0.784 \cdot i$ Two-hole equivalent diameter

$$\frac{d_{heff}}{d_{eff}} := 0.437$$

$$\frac{d_i}{d_{eff}} = 0.557$$

From Table A-16 of Reference 8, an effective J coefficient, A, was obtained:

$A := 0.58$ Approximate, use 0.5

$$\tau := \frac{T_{in} \cdot \frac{d_{eff}}{2}}{0.5}$$

$$\tau = 1896 \frac{\text{lb.}}{\text{in}^2}$$

$$t_{allow} = 0.6\,(2)\left(S_{mv}\right)$$

$$\text{Ratio} = \frac{\tau}{\tau_{allow}}$$

$= .136$

Although the torsional stress is small, it is additive to the preload stress and potentially the pressure stress. Combining the valve plug axial and torsional stresses follows below.

$$\sigma_1 := \frac{\sigma_{btot}}{2} + \sqrt{\frac{\sigma_{btot}^2}{4} + \tau^2}$$

$$= 6759 \frac{lb.}{in^2}$$

$$\sigma_2 := \frac{\sigma_{btot}}{2} - \sqrt{\frac{\sigma_{btot}^2}{4} + \tau^2}$$

$$= -532. \frac{lb.}{in^2}$$

$$P_m := \sigma_1 - \sigma_2$$

$$= 7291 \frac{lb.}{in^2}$$

$$\text{Ratio} := \frac{P_{m}}{2 \cdot S_{mv}}$$

Ratio = 0.314

Thus, the valve plug is adequate for a combined axial and torsional stress (105 ft-lb torque).

Check Valve Plug Adequacy - Torque on Internal Recess (Port 2 only):

As the clearance between the internal recess and the drive key is increased, the distance between the centerline and the point of contact decreases. For a given applied torque, the contact load will increase proportionately.

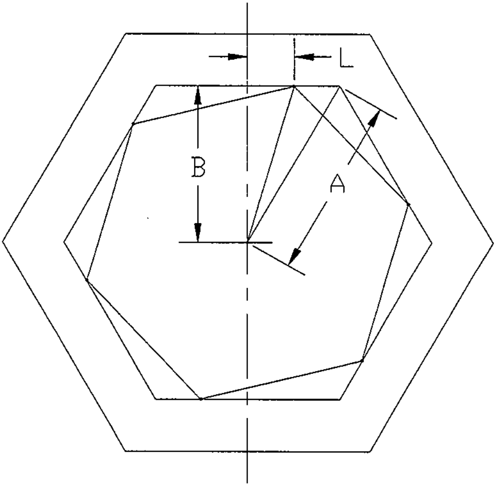

Internal recess maximum opening = 0.885 in.
Minimum distance across flats of drive key = 0.865 in.

$$A = \frac{0.865}{\text{Cos } 30^{0}} = 0.499 \text{ in.}$$

$$B = \frac{0.885}{2} = 0.443 \text{ in.}$$

$$L = \sqrt{A^2 - B^2} = \sqrt{(0.499)^2 - (0.443)^2} = 0.232 \text{ in.}$$

With a maximum applied torque of 105 ft-lb, the contact load, P is:

$$P = \frac{\text{Torque}}{6(L)} = \frac{105(12)}{6(0.232)} = 907 \text{ lb.}$$

Conservatively consider the valve head as a circular ring with dimensions:

inner radius = r_i = 0.443 in.

outer radius = $r_o = \frac{1.269}{2} = 0.635$ in.

The torsional stress is:

$$\tau = \frac{2T}{\pi\left((r_o)^4 - (r_i)^4\right)} = \frac{2(105(12))}{\pi\left((0.635)^4 - (0.443)^4\right)} = 6465 \text{ psi}$$

The radial loads will cause bending stresses in the outer portion of the valve head:

Reference 4, Table VIII, Case 9:

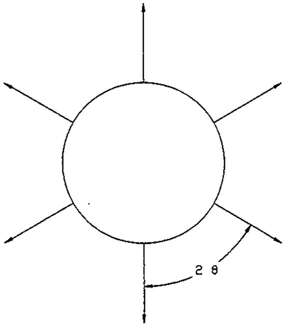

Maximum moment in ring = $\frac{1}{2}(W)(R)\left(\frac{1}{\theta} - \text{Cot}\theta\right)$

W = 907 lb.

$$R = \frac{0.443 + 0.635}{2} = 0.539 \text{ in.}$$

$\theta = 30° = 0.524$ radians

Cot $\theta = 1.732$

$$M_{max} = \frac{1}{2}(907)(.539)\left(\frac{1}{.524} - 1.732\right) = 43.12 \text{ in - lb}$$

Taking the section width as the 0.500 recess depth and $r_o - r_i = 0.635 - 0.443 = 0.192$ as the section thickness:

$$\sigma_b = \frac{6M}{b(t)^2} = \frac{6(43.12)}{0.50(0.192)^2} = 14{,}035 \text{ psi}$$

Combining into a principal stress:

$$\sigma_{principal} = \frac{\sigma_b}{2} + \sqrt{\left(\frac{\sigma_b}{2}\right)^2 + (\tau)^2} = \frac{14035}{2} + \sqrt{\left(\frac{14035}{2}\right)^2 + (6465)^2} = 16560 \text{ psi}$$

$$R = \frac{\sigma_{principal}}{2(S_m)}$$

$$= \frac{16560}{2(11600)}$$

$$= 0.714$$

Rupture Disc Process Plug Torque Stress:

The hex head of the process plug, which contains the rupture disc, is hollow which introduces the possibility of a torque overstress, this does not exist for the solid hex heads of the standard process valves. The hollow hex head torsional stress evaluation follows below. For analysis simplification, the outside surface was assumed to be round, conservatively using the minimum diameter (flat-to-flat).

$$d_o := 1.312 \cdot in$$

$$d_i := 1.03 \cdot i$$

$$J := \frac{\pi}{32} \cdot \left(d_o^4 - d_i^4\right)$$

$$J := 0.180 \cdot in^4$$

$T_{max} := 105 \cdot ft \cdot lb$ Maximum torque (Section 8.4)

$$\tau := \frac{T_{max} \cdot \frac{d_o}{2}}{J}$$

$$\tau := 4.582 \cdot 10^3 \cdot \frac{lb}{in^2}$$

$$\tau_{allow} := 2 \cdot 0.6 \cdot S_{mv}$$

$$\tau_{allow} := 1.392 \cdot 10^4 \cdot \frac{lb}{in^2}$$

$$Ratio := \frac{\tau}{\tau_{allow}}$$

Ratio = 0.329 Hex head torsional stress OK

Weld Sizing for Rupture Disc Process Valve, H-2-828047 Items 4 & 5 (Part of Item 1):

The process valve which contains a rupture disc, requires a two-piece construction connected with a fillet weld, treated as a socket weld. This weld potentially carries both the pressure loading and the torsional stress during torquing (removal).

$d_w = 2.00$ Structural weld diameter

$T_{max} := 105 \cdot ft \cdot lb$ Maximum preload torque (above)

The nut and body are welded as a socket connection with a 1/8" fillet weld:

$t_w = 1/8in$ (min)

$$f_w := \frac{T_{max}}{\pi \cdot \frac{d_w^{\,2}}{2}}$$ Circumferential force/in @ weld

$$f_w = 200.5 \, \frac{lb}{in}$$

$$\tau_w := \frac{f_w}{t_w\,(.707)}$$ Circumferential shear stress in weld

$$\tau_w := 2.27 \cdot 10^3 \, \frac{lb}{in^2}$$ Weld shear stress

This weld also carries the axial pressure loading.

$$pres := 450 \, \frac{lb}{in^2}$$

$d_{seal} := 2.00 \cdot i$ (Conservative Seal Diameter)

$$\tau_{wp} := \frac{pres \cdot \pi \cdot \frac{d_{seal}^2}{4}}{\pi \cdot d_w \cdot t_w}$$

$$\tau_{wp} := 1800 \frac{lb}{in^2}$$

Conservatively adding the torsional and axial shear stresses:

$$\tau_{tot} := t_w + \tau_{wp}$$

$$\tau_{tot} := 4070 \text{ psi}$$

$$\text{ratio} = \frac{\tau_{tot}}{(0.6)(2)(0.4)(S_m)}$$

Stress ratio using 0.6 x 2 x S_{mv} allowable per ASME NB-3227.2 and 0.4 weld quality factor per Table NG-3352-1 for surface penetrant examination only.

Ratio = 0.731 Weld OK for torsion + pressure

8.3 Plug, H-2-828041 Item 31

Parameter Definitions:

$d_b = 1.063$ in	Thread area nominal diameter (1-1/16-12UN-2A)
$l_{thread} := 0.72 \cdot i$	Valve thread engagement length
$d_o := 1.0084 \cdot i$	Min. pitch diameter, p. 1777 of Reference 10
$A_{vsol} := 0.756 \cdot in^2$	Tensile area of plug

REVISION	0	1	2		PAGE 27 OF 35
PREPARED BY / DATE	BW 4/18/97	HSA 7/14/98	~~HSA~~ 02/08/99		
CHECKED BY / DATE	CT 4/18/97	ZGS 7/14/98	02/08/99		

$$d_{eff} := \sqrt{\frac{(A_{vsol})\cdot(4)}{\pi}}$$

$d_{eff} := 0.981\ i$ Plug effective outside diameter

$d_h := 0.125\ i$ Plug radial hole

$d_i := 0.125\ i$ Plug inside diameter

$$A_{vnet} := A_{vsol} - \frac{\pi\ di^2}{4} - d_h\cdot(d_{eff} - di)$$

$A_{VNET} = 0.633$ Cross sectional area, threaded region

$d_i := 0.125\ i$ Inside diameter, threaded region

$S_{mp} := 11600\cdot\frac{lb}{in^2}$ SA-193, Gr B8S or B8SA, Sm @ design temp. (270°F)

$press := 450\ \frac{lb}{in^2}$

$d_s := 1.20\ i$ Conservative seal diameter

Required Plug Area:

$H := \frac{\pi}{4}\cdot d_s^{\,2}\cdot pres$ Pressure load

$H = 508.9\ lb$

$H_p := \pi\cdot d_s\cdot f_{sp}$ Minimum preload to seat seal

$$H_p := 1.131 \cdot 10^3\ 1$$

$$A_{req} := \frac{H + H_p}{S_{mv}}$$

$$A_{req} := 0.141\ in^2$$

$$Ratio := \frac{A_{req}}{A}$$

$Ratio = 0.223$ Body area is adequate for preload + pressure

Check Plug Adequacy for In-Service Loads

1) Thermal Loading

No thermal loading (expansion coefficients are same)

2) Preload

Torque required to achieve required preload (f_{sp}) on seal and maintain pressure:

$$T_{in} = \left(H + H_p\right)\left(K_{mean}\right)\left(\frac{d_b}{12}\right)$$

$$= (508.9 + 1131)(0.17)\left(\frac{1.063}{12}\right)$$

$$= 24.7 \text{ lb.ft.}$$

Maximum preload for T_{max} torque:

$T_{max} = 40$ lb.ft. (See Section 8.4)

$$F_{pmax} = \frac{T_{max}}{\left(K_{min}\right)\left(d_b\right)}$$

$$F_{pmax} = 4105 \text{ lb.}$$

Maximum combined in-service stress in holder body:

$$\sigma_{btot} = \frac{F_{pmax}}{A_{vnet}}$$

$$= \frac{4105}{0.637}$$

$$= 6444 \frac{\text{lb.}}{\text{in}^2}$$

Comparing the total in-service stress to the allowable of $2S_m$:

$$\text{Ratio} := \frac{\sigma_{btot}}{2 \cdot S_{mv}}$$

Ratio = 0.278

Body meets Code bolt stress requirements for maximum loading.

Check Thread Stripping in Plug:

$$F_{pmax} = 4105 \text{ lb.}$$

$A_{et} = 1.77 \frac{in^2}{in}$ Approximate external thread stripping area

$l_{engage} := 0.72\ i$ Thread engagement length

$$\tau_s := \frac{F_{pmax}}{A_{et} \cdot l_{engage}}$$

$$= 3221\ \frac{lb.}{in^2}$$

$$Ratio := \frac{\tau_s}{0.6 \cdot 2 \cdot S_{mv}}$$

Ratio = 0.463 Thread stripping OK

<u>Check Plug Adequacy for Torque Loading:</u>

Conservatively assuming that the minimum cross-section of the body experiences the full torque, find the allowable torque which will bring the holder body to the allowable stress. Assume that the maximum torque will be applied only at room temperature.

$$J_s := \frac{\pi}{32} \cdot \left[\left(d_{eff}\right)^4 - \left(d_i\right)^4 \right]$$

$$J := 0.091\ in^4$$

The effect of the radial hole is taken from Reference 8, a solid circular bar with a radial hole in torsion:

$$\frac{d}{D} := \frac{.125}{.981} = .127$$

K = 2.9

$T_{max} = 57.8$ lb.ft. Maximum torque (iteratively obtained)

$$\tau := \frac{T_{max} \cdot \frac{d_o}{2} \cdot K}{J}$$

$$= 11{,}118 \ \frac{lb.}{in^2}$$

Combining torsional stress with preload stress:

$$\sigma_{bp} = 6444 \ \frac{lb.}{in^2}$$

$$\sigma_{btot} := \sigma_{bp}$$

$$\sigma_1 := \frac{\sigma_{btot}}{2} + \sqrt{\frac{\sigma_{btot}^{\ 2}}{4} + \tau^2}$$

$$= 14{,}820 \ \frac{lb.}{in^2}$$

$$\sigma_2 := \frac{\sigma_{btot}}{2} - \sqrt{\frac{\sigma_{btot}^{\ 2}}{4} + \tau^2}$$

$$= -8379 \ \frac{lb.}{in^2}$$

$$P_m := \sigma_1 - \sigma_2$$

$$= 23{,}200 \ \frac{lb.}{in^2}$$

$$S_{mb} = 11{,}600 \frac{lb}{in^2}$$

$$\text{Ratio} := \frac{P_m}{2 \cdot S_m}$$

Ratio = 1.000 Thus, a torque of 57.8 ft-lbs is the maximum allowed.

8.4 Torque Recommendations

The minimum torque values, T_{in}, required to seat the seals and maintain the pressure loading is established above for the cover plate bolts, process valves, and rupture disc holder. It is emphasized that preload torque relationship is conditional on the adequacy of the "nut factors" extracted from Reference 7, assuming a "Never Sieze" lubricant. Reference 7, in turn, emphasizes that nut factors "can only be determined experimentally, and experience shows that we really have to redetermine it for each new application. Even then it is not a single number. Experience shows that for accurate prediction we have to make a number of experiments to determine the mean K, standard deviation, etc. Having done this, however, we can indeed predict the minimum and maximum preload we're going to achieve for a given input torque, at a predictable confidence level."

With the above qualifier in mind, a maximum torque can be estimated as the torque which would cause a component to reach it's Code allowable.

<u>Cover Plate Bolts:</u>

Recommended Torque is 17 ± 2 lb.ft. (See Section 8.1.1)

<u>Process Valves:</u>

At a stress intensity of $2S_{mv}$ the torque is $\left(\frac{2(11{,}600)}{6227}\right)(105) = 391 \text{ lb.ft.}$

Thus, a torque of 391 lb.ft. will cause the axial stress to reach the allowable stress of 2 S_m. However, as shown above, the rupture disc valve hex head will be overstressed by a torque exceeding 319 lb.ft. A reasonable recommended torque is 100 ± 5 lb.ft.). The need for a testing/calibration program, discussed above, is especially important for the process valves because the geometry is significantly different from a solid cylinder.

<u>Plug:</u>

As shown in Section 8.3, a minimum torque of 24.7 lb.ft. is required to preload the seal and a torque in excess of 57.8 lb.ft. will overstress minimum cross section. To assure an adequate preload and to avoid damaging the seal and/or the holder, a torque magnitude of 35 ± 5 ft-lbs) is recommended.

8.5 Process Filter Attachment Welds

Drawings H-2-828041 and H-2-828049 specifies 1/8-in. fillet welds on both sides of the filter (9.12 in. on one side and 16.38 in. on the other side).

$$L_{SW} = 9.12 \text{ in.}$$

$$L_{LW} = 16.38 \text{ in.}$$

The filter is relatively flat, allowing the simplifying assumption that the filter inertia loading is in the plane of the welds. Assuming the center of gravity is midway between the welded edges, the worst drop direction is parallel to the weld axes. Moment equilibrium requires that the force on each weld be equal.

$$W_f := 50 \cdot \text{lb}$$

Maximum filter weight, Reference 1

$$F_1 := \frac{W_f \cdot 101}{2}$$

$$F_1 = 2.525 \cdot 10^3 \cdot \text{lb}$$

$$\sigma_w := \frac{F_1}{L_{sw} \cdot 0.125 \cdot \text{in} \cdot 0.707}$$

$$\sigma_w := 3.133 \cdot 10^3 \frac{\text{lb}}{\text{in}^2}$$

The inertia force, being in the same plane as the welds, results in a shear stress with a throat stress allowable of $0.6S_m$.

$n = 0.35$ Weld efficiency factor, surface visual inspection

$S_m := 16700 \frac{lb}{in^2}$ F304L @ design temperature (270°F)

$Ratio := \frac{\sigma_w}{0.6 \cdot S_m \cdot n}$

Ratio = 0.893 Filter attachment welds OK

PARSONS

CALCULATION PACKAGE

FILE NO: KH-8009-8-09

DOC. NO.: HNF-SD-SNF-DR-003, Rev. 2, Appendix 11

PAGE 1 of 129

PROJECT NAME:
MCO Final Design

CLIENT:
DE&S Hanford, Inc.

CALCULATION TITLE:

MULTI-CANISTER OVERPACK THERMAL STRESS ANALYSIS

PROBLEM STATEMENT OR OBJECTIVE OF CALCULATION:

PERFORM A THERMAL STRESS ANALYSIS OF THE MCO IN ACCORDANCE WITH REVISION 5 OF THE MCO PERFORMANCE SPECIFICATION. CRITERIA ARE BASED ON THE ASME CODE.

THIS APPENDIX WAS REVISED (REVISION 1) BASED ON THE CLIENT'S DESIRES TO USE 304L STAINLESS STEEL FOR THE SHELL. ORIGINALLY, THE SHELL WAS TO BE FABRICATED OUT OF 304L STAINLESS STEEL WITH THE TENSILE AND YIELD STRENGTHS OF 304. THEREFORE, THIS APPENDIX REFLECTS THE CHANGES INDICATED BELOW.

THIS APPENDIX WAS REVISED (REVISION 2) BASED ON THE 150/450 PSI PRESSURE SPLIT AND THE MATERIAL CHANGE TO DUAL CERTIFIED 304/304L FOR THE COLLAR.

DOCUMENT REVISION	AFFECTED PAGES	REVISION DESCRIPTION	PREPARED BY INITIALS / DATE	CHECKED BY INITIALS / DATE	APPROVED BY INITIALS / DATE
0	1-133	Initial Issue	Zachary Sargent	Joe Nichols	Charles Temus
1	1-129	Eliminated 304 SS material properties. Recalculated stress ratios to reflect 304L stainless steel in the shell. Incorporated comments. Revised to reflect new design pressure of 450 psi and new design temperature of 270°F (132°C)	Zachary Sargent	Henry Averette	Charles Temus
2	All	Revised to reflect split 150/450 psi pressure and new material (304/304L) for the collar	2/4/99	2/9/99	2/9/99

CONTENTS

Page

LIST OF TABLES

Page

LIST OF FIGURES

Page

APPENDICES

1. INTRODUCTION

The Multi-Canister Overpack (MCO) assembly is a single purpose Spent Nuclear Fuel (SNF) package that is capable of maintaining subcriticality at all times and maintaining SNF containment and confinement after being closed and sealed. The MCO assembly consists of a shell, a shield plug, a locking ring and jacking screws.

This calculation documents the evaluation of the MCO shell under different Process Operating Conditions. These evaluations are as follows:

1. MCO at 75°C (167°F) with full internal vacuum and 25 psig external pressure.
2. MCO at 132°C (270°F) with full internal vacuum and 0 psig external pressure.
3. MCO at 132°C (270°F) with 150 psig internal pressure and 0 psig external pressure.
4. Lifting of the MCO at 132°C (270°F) and 150 psig.
5. Thermal gradient of a maximum of 100°C (180°F) between the outside of the MCO shell and the center of the MCO shield plug.

The evaluations are performed based on the criteria of the ASME Code. A combination of hand calculations and ANSYS© analysis is used.

2. REFERENCES

1. "Performance Specification for the Spent Nuclear Fuel Multi-Canister Overpack," Specification HNF-S-0426, Revision 5, December 1998.
2. ASME Boiler and Pressure Vessel Code, Section II - Materials, Part D - Properties, 1998 Edition.
3. ASME Boiler and Pressure Vessel Code, Section III - Division I, Subsection NB, 1998 Edition.
4. Swanson Analysis System, Inc., ANSYS© Engineering Analysis System User's Manual, Volumes I, II and III, Version 5.4, December 1997.

5. Duke Engineering Services Hanford, Specifications Drawings, Drawing H-2-828041, Revision 2B.

3. ASSUMPTIONS

1. Pressure is applied uniformly
2. Others as noted

4. MATERIAL PROPERTIES

The MCO assembly is fabricated from Type 304L stainless steel, except for the jacking screws which are fabricated ASTM A193 Grade B8S. The MCO shell is fabricated from dual certified 304/304L stainless steel. For this analysis, values for material properties are taken from Section II, Part D of the Code (See [2]) and are listed in Table 1.

The shield plug is fabricated out of SA-182 F304L, the locking ring out of SA-182 F304N, the collar out of dual certified 304/304L and the lifting cap out of SA-182 F304L.

5. ACCEPTANCE CRITERIA

This calculation considers thermal and pressure loads. The allowable stress intensities are specified by NB-3220 of the ASME Code [3]. For normal condition loading, the MCO is analyzed according to Level A stress intensity limits, as listed in Table 2 below.

Table 1: ASME Code Material Properties for MCO.

SA - 182 F304L Forging (Shield Plug)

	70° F	200° F	300° F	270° F
E - psi	**28.3×10^6**	**27.6×10^6**	**27.0×10^6**	**27.18×10^6**
S_M - psi	**16,700**	**16,700**	**16,700**	**16,700**
S_Y- psi	**25,000**	**21,300**	**19,100**	**19,760**
S_U- psi	**65,000**	**61,500**	**56,500**	**58,000**
Mean Coefficient of Thermal Expansion from 70° to Temp. - in/in/°F x 10^{-6}				
	70°F	250°F	300°F	270°F
α-in/in/°F	**8.46×10^{-6}**	**8.90×10^{-6}**	**9.00×10^{-6}**	**8.94×10^{-6}**

SA - 182 F304N Forging (Locking Ring)

	70° F	200° F	300° F	270° F
E - psi	**28.3×10^6**	**27.6×10^6**	**27.0×10^6**	**27.18×10^6**
S_M - psi	**23,300**	**23,300**	**22,500**	**22,740**
S_Y- psi	**35,000**	**28,700**	**25,000**	**26,110**
S_U- psi	**80,000**	**80,000**	**75,900**	**77,130**
Mean Coefficient of Thermal Expansion from 70° to Temp. - in/in/°F x 10^{-6}				
	70°F	250°F	300°F	270°F
α-in/in/°F	**8.46×10^{-6}**	**8.90×10^{-6}**	**9.00×10^{-6}**	**8.94×10^{-6}**

SA - 182 F304 Forging (Shell Collar)

	70° F	200° F	300° F	270° F
E - psi	**28.3×10^6**	**27.6×10^6**	**27.0×10^6**	**27.18×10^6**
S_M - psi	**20,000**	**20,000**	**20,000**	**20,000**
S_Y- psi	**30,000**	**25,000**	**22,500**	**23,250**
S_U- psi	**75,000**	**71,000**	**66,000**	**67,500**
Mean Coefficient of Thermal Expansion from 70° to Temp. - in/in/°F x 10^{-6}				
	70°F	250°F	300°F	270°F
α-in/in/°F	**8.46×10^{-6}**	**8.90×10^{-6}**	**9.00×10^{-6}**	**8.94×10^{-6}**

SA - 193 Grade B8S or B8SA (Bolting)

	70° F	200° F	300° F	270° F
E - psi	**28.3×10^6**	**27.6×10^6**	**27.0×10^6**	**27.18×10^6**
S_M - psi	**16,700**	**13,000**	**11,000**	**11,600**
S_Y- psi	**50,000**	—	—	—
S_U- psi	**95,000**	—	—	—
Mean Coefficient of Thermal Expansion from 70° to Temp. - in/in/°F x 10^{-6}				
	70°F	250°F	300°F	270°F
α-in/in/°F	**8.46×10^{-6}**	**8.90×10^{-6}**	**9.00×10^{-6}**	**8.94×10^{-6}**

Table 2: Allowable Level A Stress Intensity Limits for Type 304L

	Allowable Stress Intensity Limits (ksi)		
Stress Intensity	Formula	132°C (270°F)	75°C (167°F)
P_M	$1.0S_M$	16.7	16.7
P_L	$1.5\ S_M$	25.1	25.1
P_L+P_B	$1.5\ S_M$	25.1	25.1
P_L+P_B+Q	$3.0\ S_M$	50.1	50.1
P_M+P_B+Q+F	N / A[1]		

6. SHELL DESIGN

The MCO shell and bottom plate are analyzed for internal pressure using classical methods. The allowable external pressure for the shell is calculated per the rules of Paragraph NB-3133.2 [3]. The internal design pressure of the MCO is 150 psi. There is

---

[1] Not applicable because fatigue is not being considered.

also a pressure on the bottom of the MCO due to the weight of the fuel. From Appendix A of [1], the weight of the contents, W_F, is approximately 16,000 lbs.

Given the inside radius of the MCO shell R = 11.50 inches, the area of the bottom plate is:

$$A_{BP} = \pi\left(R^2\right) = 415.48 \text{ in}^2$$

Therefore, the pressure from the fuel on the bottom plate, P_F, is

$$P_F = \frac{W_F}{A_{BP}} = 38.51 \text{psi or } 39.00 \text{ psi}$$

The fuel is conservatively assumed to act as a fluid, resulting in lateral pressure against the shell walls. Therefore, the total internal pressure is 150 + 39 = 189 psi.

6.1 Internal Pressure

The inside diameter of the MCO shell is 23.00 inches and its outer diameter is 24.00 inches. The wall thickness is therefore 0.5 inch. The stress through the shell due to the pressure load is then

$$\sigma_P = \frac{pR}{t}$$

where p = internal pressure = 189 psig (See Section 7.2, Load Case 3)

R = Mean Radius = (24.00+23.00)/4 = 11.75 in.

T = thickness of MCO shell = 0.5 in.

Therefore

$$\sigma_P = \frac{(189)(11.75)}{0.50} = 4{,}442 \text{ psi}$$

6.2 External Pressure

In Process Operating Condition 1, the MCO is subjected to a full internal vacuum with a 25 psig external pressure; equivalent to external pressures of 14.7 psi + 25 psi or 40 psi at 75°C (167°F).

Given the following parameters:

T = Shell thickness = 0.50 inches

D_o = Shell outside diameter = 24.00 inches

L = Shell unsupported length = 143.55 inches (139.76 +1/3(0.88)+1/3(10.5)) [6]

$D_o / T = 48.0$

$L / D_o = 5.98$

A = Geometric factor, from Figure G of [2] = 0.0006

B = Stress factor, from Figure HA-1 of [2] = 6,500 psi

P_a = Allowed external pressure

$$P_a = \frac{4B}{3\left(\frac{D_o}{T}\right)} = 181 \text{ psi}$$

This value is greater than the 40 psi maximum external pressure, therefore the cylindrical portion of the shell is adequate for external pressure.

7. STRESS ANALYSIS

A stress analysis of the MCO assembly is performed using the computer analysis program ANSYS, Reference 5. For normal conditions five load cases are evaluated as described in Section 7.2.

7.1 Computer Model

The ANSYS model is built using two-dimensional axisymmetric elements. To model the threads between the shell and locking ring, coincident nodes are coupled. Coupled nodes are also used to model the threads between the locking ring and the jacking screw. Symmetry boundary conditions are applied to all nodes along the centerline.

The axisymmetric model used in this analysis is shown in Figures 1, 2 and 3.

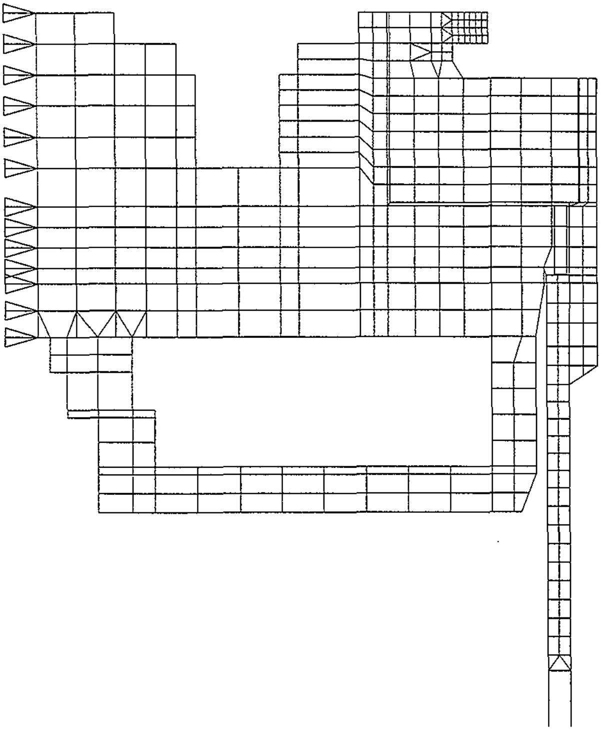

Figure 1: Axisymmetric Model with Boundary Conditions, Upper Section

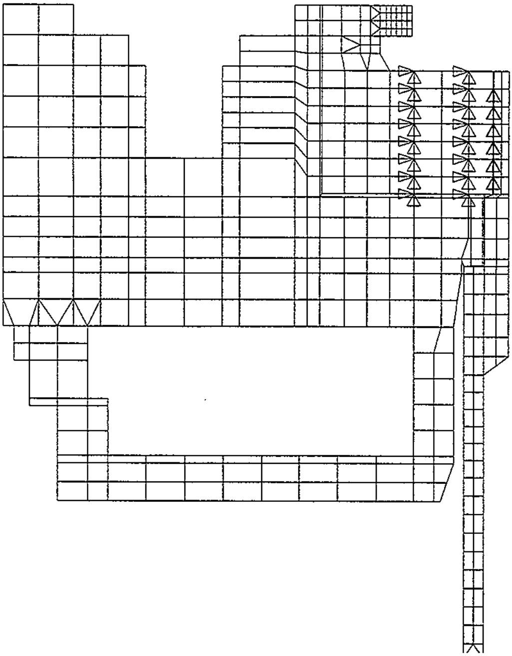

Figure 2: Axisymmetric Model with Coupled Nodes

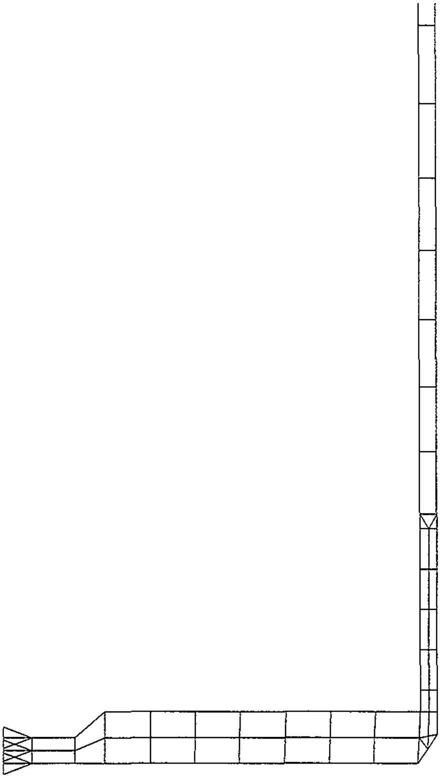

Figure 3: Axisymmetric Model with Boundary Conditions, Lower Section

7.2 Load Cases

Five Process Operating Condition load cases are analyzed in this calculation.

1. Full internal vacuum with 25 psig external pressure; equivalent to external pressures of 14.7 psi + 25 psi or 40 psi, at 75°C (167°F) uniform temperature. All stresses for this load case are classified as primary stresses (P_M or P_L+P_B).
2. Full internal vacuum with 0 psig external pressure; equivalent to external pressure of 14.7 psi or 15 psi, at 132°C (270°F) uniform temperature. All stresses for this load case are classified as primary stresses.
3. 189 psi internal pressure at 132°C (270°F) uniform temperature. This value represents 150 psi for the design pressure and 39 psi for the fuel weight. All stresses for this load case are classified as primary stresses.
4. Lifting of the MCO with 189 psi internal pressure at 132°C (270°F) uniform temperature. All stresses for this load case are classified as primary stresses.
5. Differential temperature: shell at 132°C (270°F) and shield plug at 32°C (90°F), at 189 psi internal pressure. All stresses for this load case are classified as primary plus secondary (P_L+P_B+Q), since thermal stresses are secondary stresses (Q). The primary stresses for this load case are the same as load case 1.

For Load Case 1, the corresponding ANSYS input and output files are POC1.inp and POC1.out, respectively.

For Load Case 2, the corresponding ANSYS input and output files are POC2.inp and POC2.out, respectively.

For Load Case 3, the corresponding ANSYS input and output files are MCO132.inp and MCO132.out, respectively.

For Load Case 4, the corresponding ANSYS input and output files are POC4.inp and POC4.out, respectively.

For Load Case 5, the corresponding ANSYS input and output files are TG275.inp and TG275.out, respectively.

7.3 Results

Stresses are reported for the nodes listed in Table 4. A summary of the maximum stress intensities is presented in Tables 5 through 9.

For load cases 1,2,3 and 4 (internal and external pressures), the primary membrane stress P_M, is compared to the allowable membrane stress, S_M; the membrane plus bending stress, P_L+P_B, is compared to $1.5S_M$. For load case 5 the total stress P_L+P_B+Q, is compared to $3S_M$.

The results show that for all load cases, the computed stress intensities are lower than the allowable stress intensities.

Table 3: ANSYS Model Stress Report Sections

Component	Inside Node	Outside Node
Bottom Plate	1	41
	6	46
	10	50
Lower Shell	50	52
	50	55
	53	55
	62	64
	65	67
Mid-Shell	100	101
	122	123
	134	135
	156	157
	170	171
	180	181
Upper Shell (collar)	202	204
	235	237
	985	989
	262	264
	277	279
	292	294
Shield Plug	601	641
	601	613
	603	703
	606	706
	706	736
	766	806
	748	808
	730	810
	736	815
	869	874
	870	875
Locking Ring	431	434
	404	424
	406	426

In calculating the stress ratios, the following apply:

Type 304L: $S_M = 16.7$ ksi @ 75°C (167°F)
$S_M = 16.7$ ksi @ 132°C (270°F)

Type 304: $S_M = 20.0$ ksi @ 75°C (167°F)
$S_M = 20.0$ ksi @ 132°C (270°F)

Type 304N: $S_M = 23.3$ ksi @ 75°C (167°F)
$S_M = 22.74$ ksi @ 132°C (270°F)

Table 4: Summary of Maximum Stress Intensities for Load Case 1

Component	P_M (ksi)	Stress Ratio	P_L+P_B (ksi)	Stress Ratio
Bottom Plate (304L)	0.94	0.06	2.56	0.10
Lower Shell (304)	1.02	0.05	1.88	0.05
Middle Shell (304)	1.01	0.05	1.03	0.03
Upper Shell/Collar (304)	6.26	0.31	9.60	0.32
Shield Plug (304L)	6.17	0.37	7.08	0.28
Locking Ring (304N)	1.08	0.05	1.55	0.04

Note: Stress Ratio = $\frac{P_M}{S_M}$ or $\frac{P_L + P_B}{1.5S_M}$

Note: S_M at 75°C (167°F)

Table 5: Summary of Maximum Stress Intensities for Load Case 2

Component	P_M (ksi)	Stress Ratio	P_L+P_B (ksi)	Stress Ratio
Bottom Plate (304L)	0.35	0.02	0.96	0.04
Lower Shell (304)	0.38	0.02	0.71	0.02
Middle Shell (304)	0.38	0.02	0.39	0.01
Upper Shell/Collar (304)	5.61	0.28	8.87	0.30
Shield Plug (304L)	6.30	0.38	7.05	0.28
Locking Ring (304N)	1.14	0.05	1.62	0.04

Note: Stress Ratio = $\frac{P_M}{S_M}$ or $\frac{P_L + P_B}{1.5S_M}$ Note: S_M at 132°C (270°F)

Table 6: Summary of Maximum Stress Intensities for Load Case 3

Component	P_M (ksi)	Stress Ratio	P_L+P_B (ksi)	Stress Ratio
Bottom Plate (304L)	2.83	0.17	9.35	0.37
Lower Shell(304)	4.60	0.23	10.72	0.36
Middle Shell (304)	4.62	0.23	4.71	0.16
Upper Shell/Collar (304)	5.04	0.25	8.40	0.28
Shield Plug (304L)	5.20	0.31	7.20	0.29
Locking Ring (304N)	1.37	0.06	1.93	0.06

Note: Stress Ratio = $\frac{P_M}{S_M}$ or $\frac{P_L + P_B}{1.5S_M}$ Note: S_M at 132°C (270°F)

Table 7: Summary of Maximum Stress Intensities for Load Case 4

Component	P_M (ksi)	Stress Ratio	P_L+P_B (ksi)	Stress Ratio
Bottom Plate (304L)	2.87	0.17	9.56	0.38
Lower Shell (304)	4.60	0.23	8.76	0.29
Middle Shell (304)	4.62	0.23	4.70	0.16
Upper Shell/Collar (304)	5.43	0.27	8.97	0.30
Shield Plug (304L)	4.84	0.29	6.95	0.28
Locking Ring (304N)	1.62	0.07	3.02	0.09

Note: Stress Ratio = $\frac{P_M}{S_M}$ or $\frac{P_L + P_B}{1.5S_M}$ Note: S_M at 132°C (270°F)

Table 8: Summary of Maximum Stress Intensities for Load Case 5

	Differential Temperature	
Component	P_L+P_B+Q (ksi)	Stress Ratio
Bottom Plate (304L)	26.66	0.53
Lower Shell (304)	9.65	0.16
Middle Shell (304)	4.81	0.08
Upper Shell/Collar (304)	8.99	0.15
Shield Plug (304L)	14.20	0.28
Locking Ring (304N)	2.54	0.04

Note: Stress Ratio = $\frac{P_L + P_B + Q}{3S_M}$ Note: S_M at 132°C for Shell, rest at 32°C

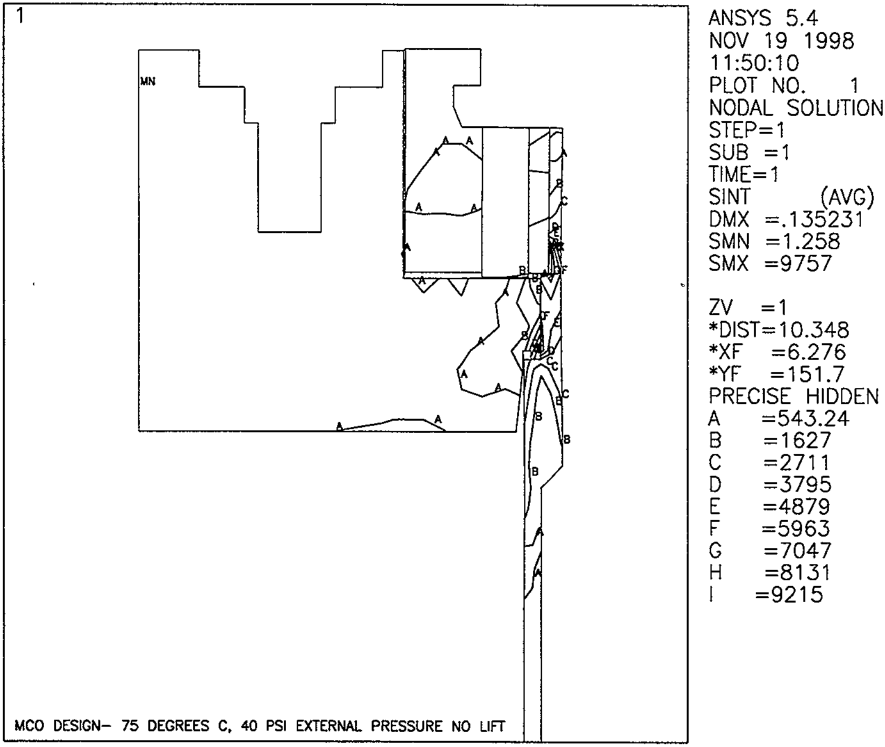

Figure 4: Load Case 1 – Upper Section Stress Intensities

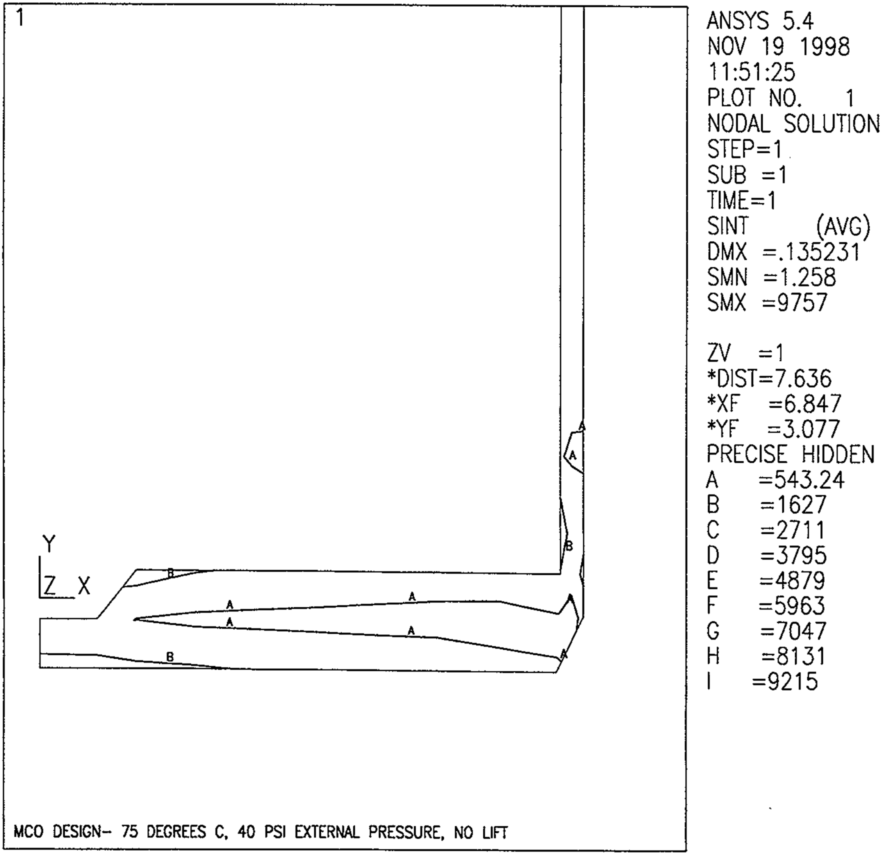

Figure 5: Load Case 1 -- Lower Section Stress Intensities

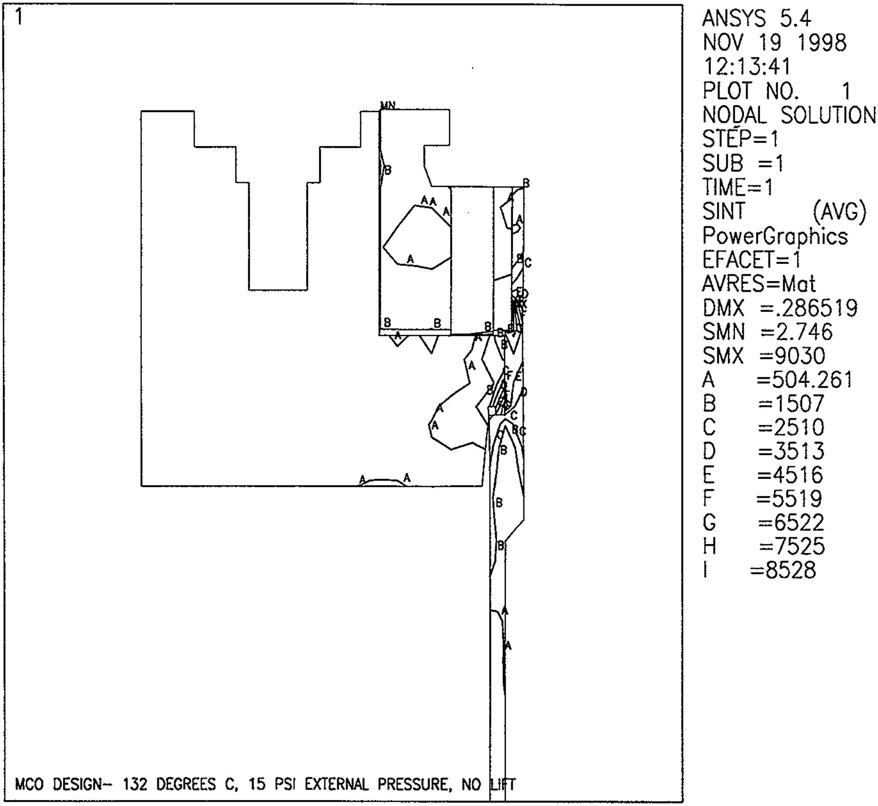

Figure 6: Load Case 2 – Upper Section Stress Intensities

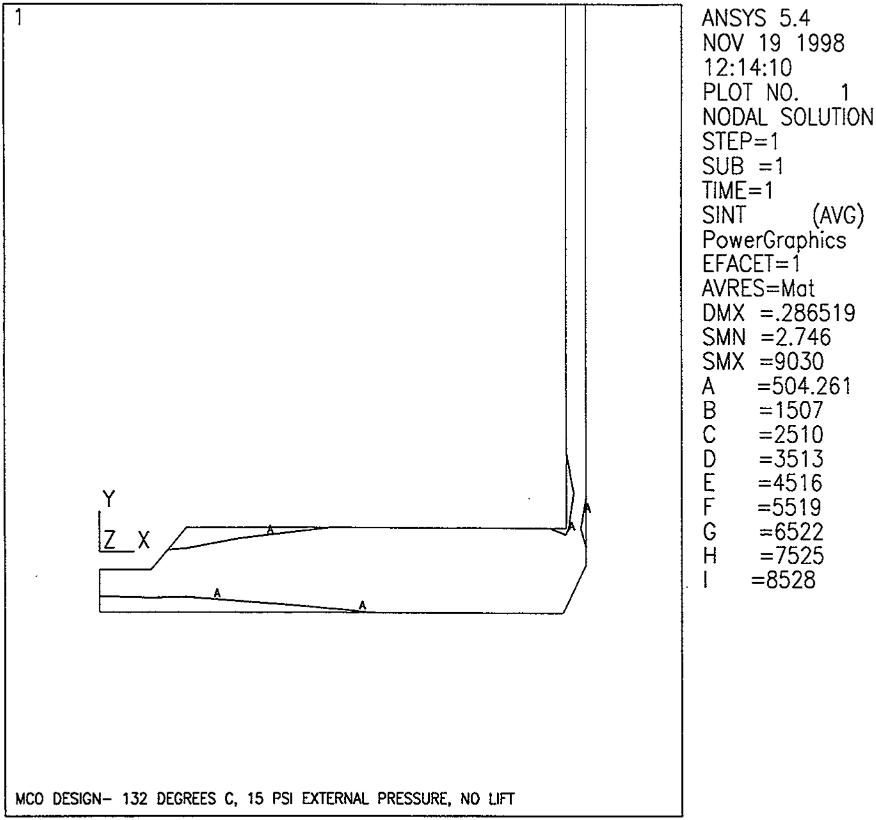

Figure 7: Load Case 2 – Lower Section Stress Intensities

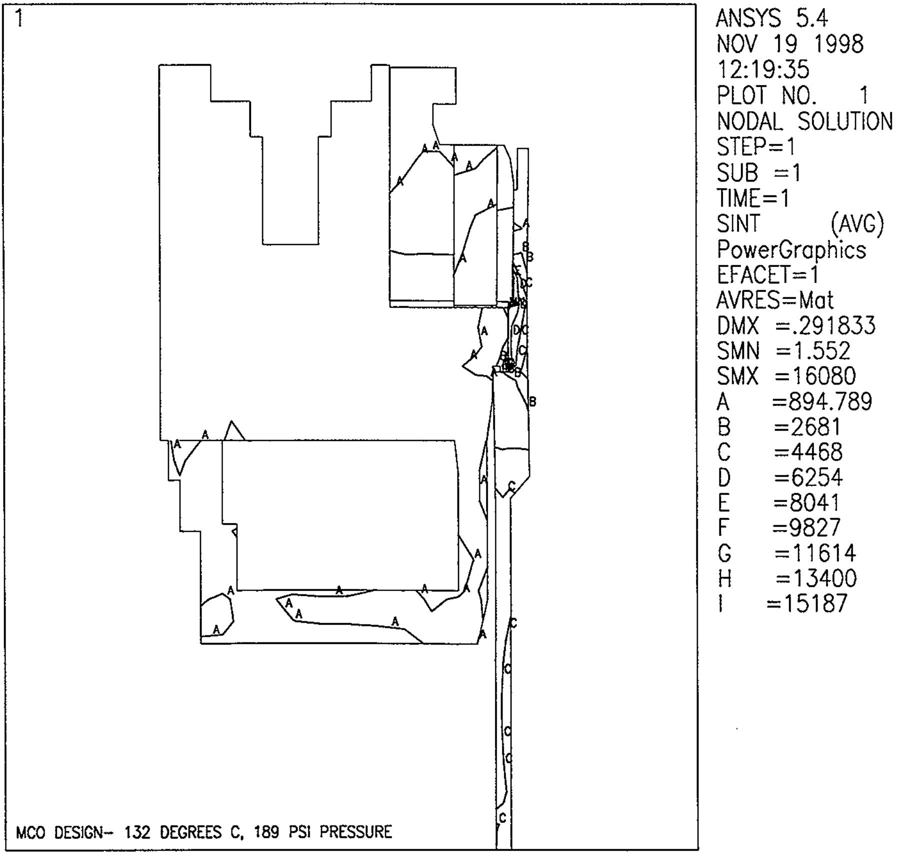

Figure 8: Load Case 3 – Upper Section Stress Intensities

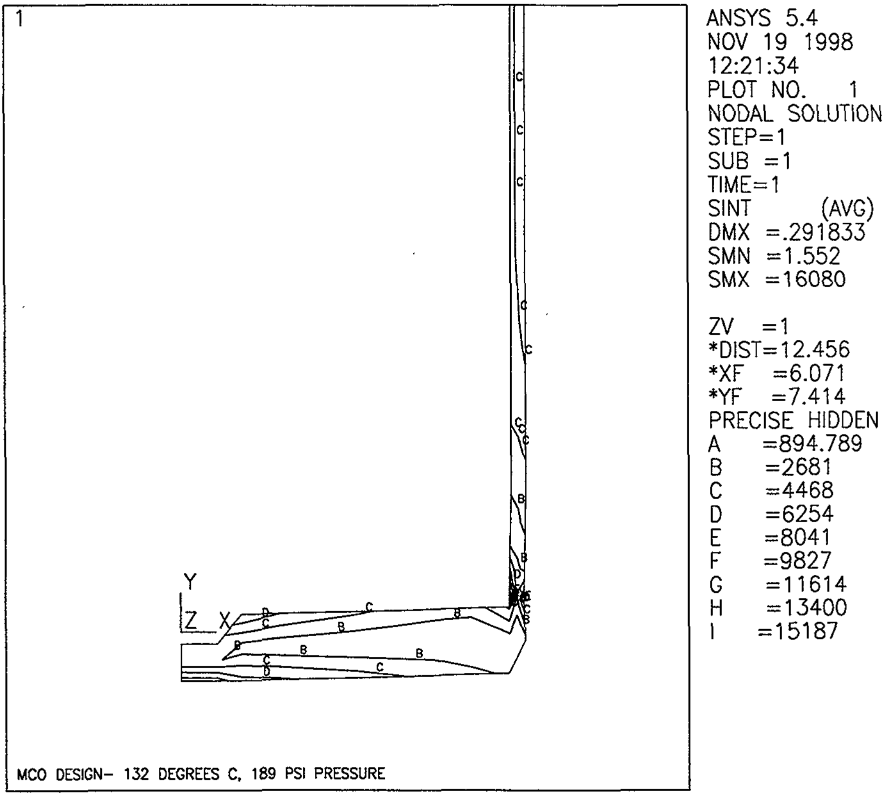

Figure 9: Load Case 3 – Lower Section Stress Intensities

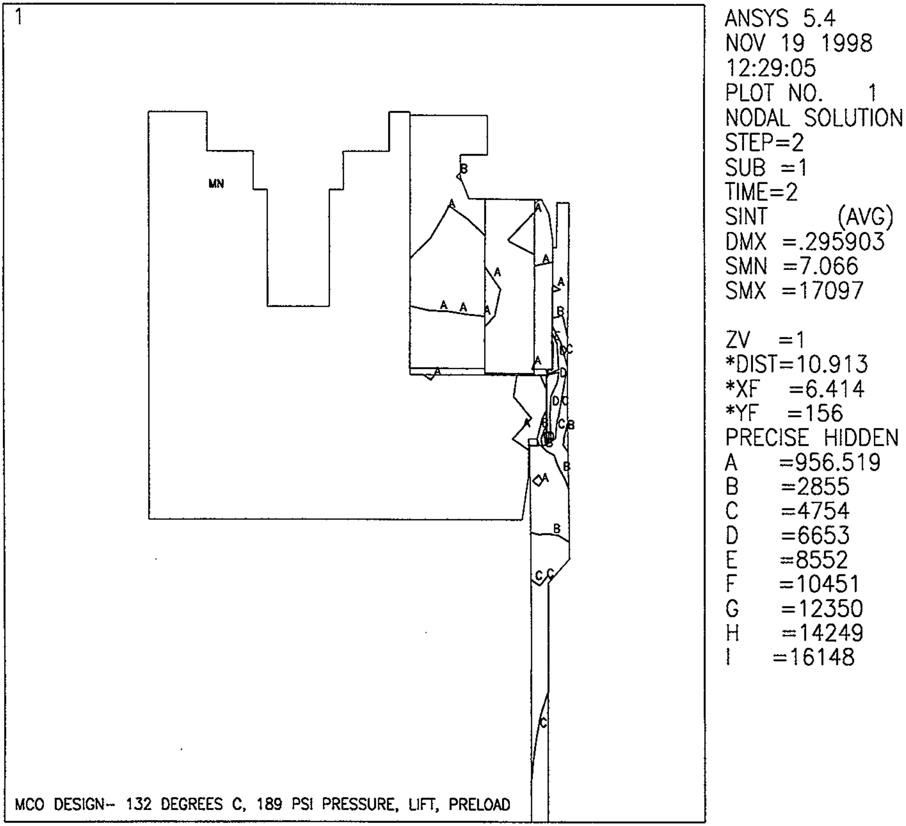

Figure 10: Load Case 4 – Upper Section Stress Intensities

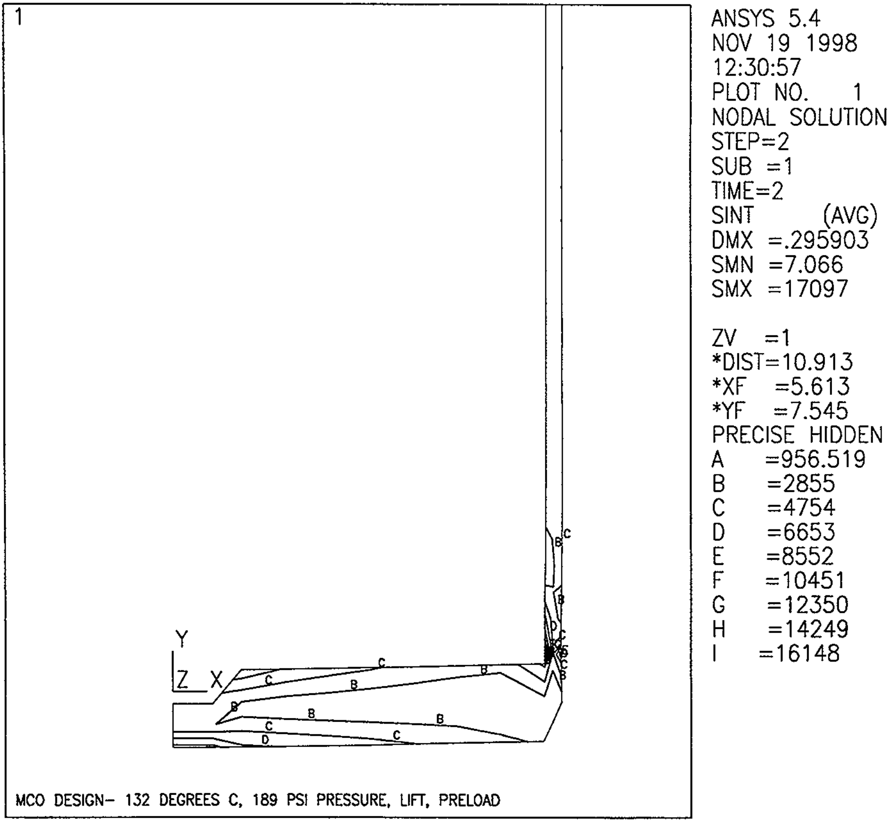

Figure 11: Load Case 4 – Lower Section Stress Intensities

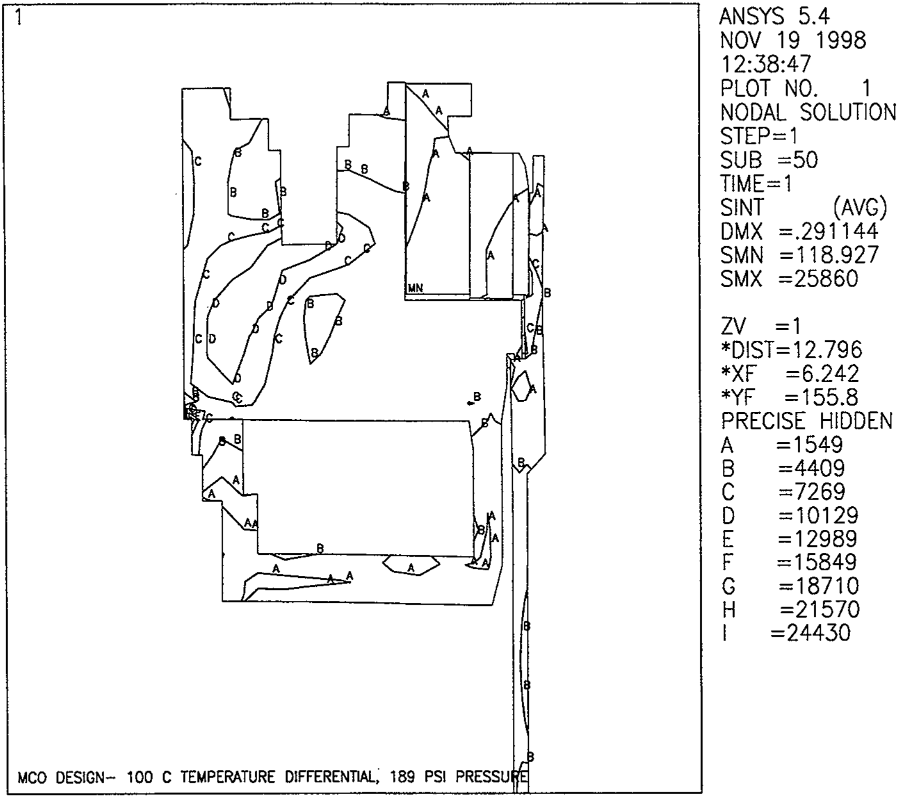

Figure 12: Load Case 5 – Upper Section Stress Intensities

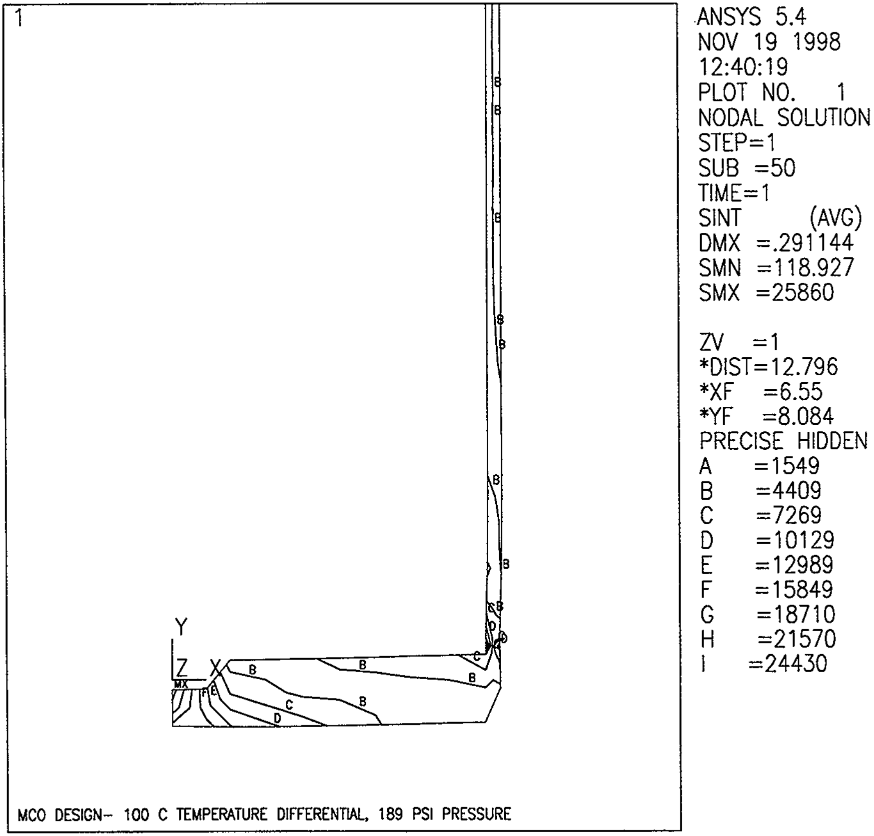

Figure 13: Load Case 5 – Lower Section Stress Intensities

APPENDIX A:

Computer Run Output Sheets
&
Input File Listings

COMPUTER RUN COVER SHEET

Project Number:	KH-8009-8
Computer Code:	ANSYS®-PC
Software Version:	5.4
Computer System:	Windows 95 ®, Pentium® Processor
Computer Run File Number:	KH-8009-8-09
Unique Computer Run Filename:	POC1.inp
Run Description:	Load Case 1: 40 psi, 75°C
Creation Date / Time:	11 November 1998 1:11:29 PM

Michael E. Cohen 2/4/99

Prepared By: Michael E. Cohen Date

2/4/99

Checked By: Zachary G. Sargent Date

LISTING OF POC1.INP FILE

```
/BATCH,LIST
/FILENAM,POC1
/PREP7
/TITLE,MCO DESIGN- 75 DEGREES C, 40 PSI EXTERNAL PRESSURE, NO LIFT

TREF,70
TUNIF,167

/COM **** ELEMENT TYPES ****
ET,1,42,,,1                 ! Shell
ET,2,42,,,1                 ! Shield Plug
ET,3,42,,,1                 ! Lifting & Locking Ring
ET,4,12                     ! Gap Elements Between Shield Plug & Shell
KEYOPT,4,7,1
ET,5,42,,,1                 ! Bolt

/COM **** REAL CONSTANTS FOR GAP ELEMENTS ****
R,4,-90,1.0e8,-0.06,3.0       ! Shell/Shield Plug, Initially Open .06"
R,5,0,1.0e8,2.75e-03          ! L. Ring/Shield Plug, Under Bolt, Preloaded
R,6,0,1.0E8,0,2.0           ! Sealing Surface, closed

/COM ************* MATERIAL PROPERTIES *************
MP,DENS,1,490/1728          ! 304L SS
MP,NUXY,1,0.3

MP,DENS,5,490/1728          ! SA193 Grade B8M
MP,NUXY,5,0.3

/COM **** DEFINING TEMPERATURES FOR MPDATA ****
MPTEMP,1, 70,100,200,300,400,500
MPTEMP,7,600,650,700,750

/COM **** DEFINING ELASTIC MODULI FOR 304L & SA-193 ****
MPDATA,EX,1,1,28.3e+06,28.1e+06,27.6e+06,27.0e+06,26.5e+06,25.8e+06
MPDATA,EX,1,7,25.3e+06,25.1e+06,24.8e+06,24.5e+06
/COM                  ! SA-193
MPDATA,EX,5,1,28.3e+06,28.1e+06,27.6e+06,27.0e+06,26.5e+06,25.8e+06
MPDATA,EX,5,7,25.3e+06,25.1e+06,24.8e+06,24.5e+06

/COM **** MEAN COEFFICIENTS OF THERMAL EXPANSION (in./in./(F) ****
! SA240 Gr 304L
MPDATA,ALPX,1,1,0,8.55e-06,8.79e-06,9.00e-06,9.19e-06,9.37e-06
MPDATA,ALPX,1,7,9.53e-06,9.61e-06,9.69e-06,9.76e-06

! SA193 Gr B8M
MPDATA,ALPX,5,1,0,8.54e-06,8.76e-06,8.97e-06,9.21e-06,9.42e-06
MPDATA,ALPX,5,7,9.60e-06,9.69e-06,9.76e-06,9.81e-06

/COM************* SHELL GEOMETRY ****************
```

```
IR=11.5                  ! Internal Shell Radius @ Bottom
OR=12.000                   ! Shell Outside Radius @ Bottom
IR2 = 12.02                ! Inside Radius at Collar Sealing Surface
OR2 = 12.625                 ! Outside Radius at Collar Sealing Surface
IR3 = 12.25                ! Inside Radius at Collar-Lifting Ring Weld

/COM **** BOTTOM COVER PLATE   [DWG SK-2-300378] ****
N,1,,-1.32                    ! Row 1
N,2,1.25,-1.32
N,3,2.13,-1.32
N,10,11.423,-1.32
FILL

N,41,0.00,-0.44           ! Row 3
N,42,1.25,-0.44
N,43,2.13,0.44
N,50,IR,0.44
FILL,43,50
N,52,OR,0.44
FILL,50,52

FILL,1,41,1,21,1,10           ! Middle Row
FILL,10,50,1,30
N,32,12,-0.32
FILL,30,32
FILL,10,32,1,11
N,53,IR,1.17
N,55,OR,1.17              ! Shell Stub/Weld
FILL,53,55

/COM **** SHELL [DWGS SK-2-300379 & SK-2-300461] ****
N,65,IR,6.68
N,67,OR,6.68
FILL
FILL,53,65,3,,3,3,1

/COM **** SINGLE ROW SHELL ****
N,100,IR,7.18             ! Inside
N,140,IR,71.68
N,180,IR,136.68

N,101,OR,7.18               ! Outside
N,141,OR,71.68
N,181,OR,136.68
FILL,100,140,20,,2,2,1,2.0
FILL,140,180,19,,2,2,1,.5

/COM **** DOUBLE ROW SHELL ****
N,190,IR,137.18             ! Transition to Double Row
N,192,OR,137.18
```

```
FILL

/COM **** BASE OF CASK THROAT--ELEVATION: 138 INCHES ****
N,217,IR,142.68          ! Transition to Double Row
N,219,OR,142.68
FILL
FILL,190,217,8,,3,3,1    ! Vertical Fill

/COM **** BOTTOM OF COLLAR TRANSITION ****
N,235,IR,146.06          ! Start of Transition to Large O.D &
N,237,OR,146.06           ! Assumed Location of Shield Plug Taper
FILL
N,238,IR,146.68
N,240,OR,146.68
FILL                ! Horizontal Fill
FILL,217,235,5,,3,3,1    ! Vertical Fill

/COM **** TOP OF COLLAR TRANSITION ****
N,241,IR,147.31         ! End of Transition to Large O.D &
N,243,OR,147.31          ! Assumed Location of Shield Plug Taper
FILL                ! Horizontal Fill
NGEN,2,3,241,243,1,,0.75

/COM **** COLLAR SEALING SURFACE ****
N,247,IR,149.63         ! Inside Radius of Sealing Surface
N,249,IR2,149.63         ! Outside Radius at Sealing Surface
FILL                ! Horizontal Fill

/COM **** THICK WALL AT COLLAR TRANSITION ****
NGEN,2,10,240,249,3       ! Nodes 250-259 Coincident w/240-249 (by 3)
N,255,OR2,147.31         ! Outside Surface
N,261,OR2,149.63         ! Outside Surface
N,258,OR2,148.06
N,980,IR,149.38
N,981,11.755,149.38
N,982,IR2,149.38
N,983,12.317,149.38
N,984,OR2,149.38
N,990,OR2,146.68
FILL,240,990,1,251
NGEN,2,5,980,984,1,,-0.66
FILL,246,258,1,257
FILL,253,255,1,,1,3,3
FILL,237,990,1,991

/COM **** COLLAR AT BOTTOM EDGE OF PLUG (.155" above Sealing Surface) ****
NGEN,2,3,259,,,,0.245     ! Nodes 262

/COM **** COLLAR AT TOP EDGE OF PLUG (2" above bottom Edge) ****
NGEN,2,9,262,,,,2.00     ! Nodes 271
```

```
FILL,262,271,2

/COM **** COLLAR AT BASE OF THREADS ****
N,274,IR3,152.00
N,1000,IR2,152.00

/COM **** TOP TO COLLAR (WELD CLOSURE) ****
N,295,IR3,156.00
FILL,274,295
NGEN,3,1,259,295,3,(OR2-IR2)/2
NGEN,3,1,274,295,3,(OR2-IR3)/2

/COM************* LOCKING & LIFTING RING GEOMETRY *************
RING1=7.94
RING2=9.375
RING3=9.625
RING4=10.19
RING5=12.23
LOCAL,11,0,,152.00        ! Local System z=0 at Base of Ring
CSYS,11

/COM **** TOP EDGE ****
N,401,RING1,6.13
CSYS,O
N,404,9.375,158.13
FILL,401,404,,,1
N,406,RING4,158.13
FILL,404,406,,,1        ! Top Edge

/COM **** LIFTING SURFACE ****
CSYS,11
N,421,RING1,5.13
N,424,RING2,5.13
FILL,421,424
N,426,RING4,5.13
FILL,424,426
FILL,401,421,1,,10,6,1
N,431,RING1,6.13-1.56
N,434,RING2,6.13-1.56
FILL

/COM **** BOLTING SURFACE ****
N,441,RING1,4
N,444,RING3,4
FILL
N,445,10.9375-.6875,4      ! Inside Edge of Bolt Hole
N,447,10.9375+.6875,4      ! Outside Edge of Bolt Hole
FILL
N,910,10.9375-.6875,4
N,911,10.9375+.6875,4
```

```
N,448,RING5,4             ! O.D of Ring
CSYS,0                  ! Bolt Extension
N,924,10.25,152.00         ! Double Nodes @ Bolt for Gap elements
N,925,11.625,152.00
FILL,910,924,6,,2
FILL,911,925,6,,2
N,525,10.25,151.874        ! Bottom of Bolt Extension
N,527,11.625,151.874
FILL

/COM **** BOTTOM OF LIFTING/LOCKING RING ****
CSYS,11
NGEN,2,70,441,448,1,,-4     ! Bottom Surface of Lifting/Locking Ring
FILL,441,511,6,,10,8,1     ! Fill in Lifting/Locking Ring

/COM************* SHIELD PLUG (offset y by 158.25) *************
LOCAL,20,0,,158.13
TYPE,2
PLUGR1=11.975
PLUGR2=11.45
PLUGR3=11.25
PLUGR4=7.89

/COM **** NODES AT PLUG AXIS (r=0) ****
N,601
N,602,0,-1
N,603,0,-1.994
N,606,0,-4.994
FILL,603,606,2,604
N,607,0,-6.25
N,610,0,-8.25
FILL,607,610,2,608
N,611,0,-8.75
N,613,0,-10.5
FILL,611,613

/COM **** NODAL GENERATION ****
NGEN,2,20,601,613,1,0.8825
NGEN,2,20,621,633,1,0.8825          ! Id Large Opening
NGEN,2,20,642,653,1,0.6875
NGEN,2,20,662,673,1,0.6875          ! Id Medium Opening
NGEN,2,20,683,693,1,0.4235          ! Id Small Opening
NGEN,2,10,706,713,1,0.9515          ! Center of Opening

N,730,5.4665,-1.994             ! Od Small Opening
N,736,5.4665,-4.994
FILL,730,736,5,731
N,737,5.4665,-6.25
N,740,5.4665,-8.25
FILL,737,740,2,738
```

```
N,741,5.4665,-8.75
N,743,5.4665,-10.5
FILL,741,743
N,748,5.89,-1.0
NGEN,2,20,730,743,1,0.4235
FILL,748,750
N,766,7.265,0
NGEN,2,20,748,763,1,1.375
FILL,766,768
NGEN,3,20,766,768,1,0.3125
N,789,7.5775,-1.56
N,796,7.5775,-5.56
FILL,789,796,6
NGEN,2,20,789,796,1,0.3125
NGEN,3,20,777,783,1,0.3125

/COM **** UNDER LOCKING RING ****
N,824,8.5017,-6.25
N,827,8.5017,-8.25
FILL
N,828,8.5017,-8.75
N,830,8.5017,-10.5
FILL
NGEN,3,7,824,830,1,0.5616
NGEN,2,7,838,844,1,0.625
NGEN,2,7,845,851,1,0.6875      ! Under Bolt
N,859,11.625,-6.25
N,860,11.625,-6.917
N,861,11.625,-7.584
N,862,PLUGR2,-8.25
N,863,PLUGR2,-8.75
N,865,PLUGR3,-10.5
FILL,863,865,1
N,866,PLUGR1-0.288,-6.25
N,869,PLUGR1-0.288,-8.25
FILL,866,869,2
N,870,PLUGR1-0.288,-8.476
NGEN,2,5,866,870,1,0.288

/COM **** REFINING LIFTING EAR ****
CSYS,0
N,877,9.53,158.13
N,889,9.53,157.63
N,901,9.53,157.13
FILL,403,404,1,876
FILL,413,414,1,888
FILL,423,424,1,900
FILL,877,405,1,878
FILL,405,406,2,879,1
FILL,889,415,1,890
```

```
FILL,415,416,2,891,1
FILL,404,414,1,881
FILL,877,889,1,882
FILL,878,890,1,883
FILL,405,415,1,884
FILL,879,891,1,885
FILL,880,892,1,886
FILL,406,416,1,887
FILL,889,901,1,894
FILL,414,424,1,893
FILL,901,425,1,902
FILL,890,902,1,895
FILL,415,425,1,896
FILL,425,426,2,903,1
FILL,891,903,1,897
FILL,892,904,1,898
FILL,416,426,1,899
FILL,424,434,1,907
FILL,433,434,1,908
FILL,423,433,1,905
FILL,905,907

/COM **** COUPLING NODES ****
/COM **** BETWEEN LIFTING/LOCKING RING & SHELL ****
CP,1,UY,508,277            ! Start Threads
CP,2,UY,498,280
CP,3,UY,488,283
CP,4,UY,478,286
CP,5,UY,468,289
CP,6,UY,458,292

/COM **** BETWEEN BOLT & LOCKING RING ****
CP,7,UY,445,910
CP,8,UX,445,910
CP,9,UY,447,911
CP,10,UX,447,911
*DO,I,1,7
CP,10+I,UY,445+10*I,910+2*I
*ENDDO
*DO,I,1,7
CP,17+I,UY,447+10*I,911+2*I
*ENDDO
*DO,I,1,7
CP,24+I,UX,445+10*I,910+2*I
*ENDDO
*DO,I,1,7
CP,31+I,UX,447+10*I,911+2*I
*ENDDO
NALL
EALL
```

```
/COM **** ELEMENT GENERATION FOR SHELL ****
TYPE,1
MAT,1

/COM **** BOTTOM OF SHELL ****
E,1,2,22,21
E,2,3,23,22
EGEN,8,1,-1
E,10,11,30
E,21,22,42,41
E,22,23,43,42
EGEN,10,1,-1
E,11,31,30
E,11,32,31

/COM **** SHELL ****
E,50,51,54,53
EGEN,2,1,-1
EGEN,5,3,-2

/COM **** FIRST TRANSITION ELEMENTS ****
E,65,66,100
E,100,66,101
E,67,101,66

/COM **** SINGLE SHELL ****
E,100,101,103,102
EGEN,40,2,-1

/COM **** SECOND TRANSITION ELEMENTS ****
E,190,180,191
E,180,181,191
E,181,192,191

/COM **** TOP SHELL (DOUBLE ELEMENT) ****
E,190,191,194,193
EGEN,2,1,-1
EGEN,18,3,-2
E,244,245,986,985
EGEN,2,1,-1
E,256,257,988,987
E,257,258,989,988
E,985,986,981,980
EGEN,4,1,-1
E,980,981,248,247
EGEN,2,1,-1
E,982,983,260,249
E,983,984,261,260
```

```
/COM **** COLLAR TRANSITION & THREADED REGIONS ****
E,237,991,251,240
E,991,990,251
E,240,251,254,253
E,251,990,255,254
E,253,254,257,256
EGEN,2,1,-1
E,259,260,263,262
EGEN,2,1,-1
EGEN,12,3,-2
E,271,274,1000

/COM **** MERGE COINCIDENT NODES FOR SHELL ****
ESEL,S,TYPE,,1
NSLE
NUMMRG,NODE,
EALL
NALL
/COM **** END OF SHELL/COLLAR ELEMENT GENERATION ****

/COM **** LOCKING/LIFTING RING ELEMENTS ****
TYPE,3
MAT,1
E,411,412,402,401
EGEN,2,1,-1
EGEN,2,10,-2
E,413,888,876,403
E,881,404,876
E,888,881,876
E,888,414,881
E,881,882,877,404
E,414,889,882,881
E,882,883,878,877
E,889,890,883,882
E,883,884,405,878
E,890,415,884,883
E,884,885,879,405
E,415,891,885,884
E,885,886,880,879
E,891,892,886,885
E,886,887,406,880
E,892,416,887,886
E,423,900,888,413
E,893,414,888
E,900,893,888
E,900,424,893
E,893,894,889,414
E,424,901,894,893
E,894,895,890,889
E,901,902,895,894
```

```
E,895,896,415,890
E,902,425,896,895
E,896,897,891,415
E,425,903,897,896
E,897,898,892,891
E,903,904,898,897
E,898,899,416,892
E,904,426,899,898
E,431,432,422,421
E,905,423,422
E,432,905,422
E,432,433,905
E,905,906,900,423
E,433,908,906,905
E,906,907,424,900
E,908,434,907,906
E,441,442,432,431
EGEN,2,1,-1
E,443,908,433
E,443,444,434,908
E,451,452,442,441
EGEN,3,1,-1
EGEN,7,10,-3
E,454,912,910,444
E,464,914,912,454
E,474,916,914,464
E,484,918,916,474
E,494,920,918,484
E,504,922,920,494
E,514,924,922,504
E,458,448,911,913
E,468,458,913,915
E,478,468,915,917
E,488,478,917,919
E,498,488,919,921
E,508,498,921,923
E,518,508,923,925

/COM **** BOLT ****
TYPE,5
MAT,5
E,455,456,446,445
EGEN,8,10,-1
E,456,457,447,446
EGEN,8,10,-1
/COM************* END OF LOCKING/LIFTING RING *************

/COM **** SHIELD PLUG ELEMENTS ****
TYPE,2
MAT,1
```

```
E,602,622,621,601
EGEN,12,1,-1
EGEN,2,20,-12
EGEN,3,20,-11
EGEN,2,20,-10
E,707,717,716,706
EGEN,7,1,-1
E,717,737,736,716
EGEN,7,1,-1
E,731,751,750,730
EGEN,13,1,-1
E,749,769,768,748
EGEN,15,1,-1
E,767,787,786,766
EGEN,17,1,-1
EGEN,2,20,-17
E,818,825,824,817
EGEN,6,1,-1
EGEN,5,7,-6
E,853,860,859,852
EGEN,6,1,-1
E,860,867,866,859
EGEN,3,1,-1
E,867,872,871,866
EGEN,4,1,-1
/COM************* END OF SHIELD PLUG *************

/COM************* CONTACT ELEMENTS *************
/COM **** BETWEEN LOCKING RING & SHIELD PLUG ****
TYPE,4
REAL,4
E,806,401
E,807,411
E,808,421
E,809,431
E,810,441
E,811,451
E,812,461
E,813,471
E,814,481
E,815,491
E,816,501
E,817,511

/COM **** BETWEEN SHIELD PLUG & BOTTOM OF BOLT
REAL,5
E,845,525
E,852,526
E,859,527
```

```
/COM **** BETWEEN SHIELD PLUG & SHELL (ABOVE SEAL)
REAL,4
E,871,271
E,872,268
E,873,265
E,874,262

/COM **** BETWEEN SHIELD PLUG & SHELL (BELOW SEAL)
E,863,980

/COM **** BETWEEN SHIELD PLUG AND SEAL LIP
TYPE,4
REAL,6
E,247,862
E,248,870
E,249,875
/COM************* END GAP ELEMENTS *************

/COM************* BOUNDARY CONDITIONS AT AXIS (X=0) ************
CSYS,0
NSEL,S,LOC,X,0
D,ALL,UX,0
NALL
EALL
NSEL,S,NODE,,10
D,ALL,UY,O
NALL
EALL
SAVE
FINISH

!***************************************************************
/COM***************       SOLUTION PHASE      **************
/SOLUTION

/COM **** APPLYING 40 PSI EXTERNAL PRESSURE ****
NALL
EALL
NSEL,S,LOC,X,0,11.425         ! Bottom Plate
NSEL,R,LOC,Y,-1.31,-1.33
SF,ALL,PRES,40
NALL
EALL
NSEL,S,LOC,X,11.422,12.01      ! 30 d Chamfer
NSEL,R,LOC,Y,-1.33,-0.31
SF,ALL,PRES,40
NALL
EALL
NSEL,S,LOC,X,11.99,12.01       ! Outside shell
NSEL,R,LOC,Y,-0.33,146.1
```

```
SF,ALL,PRES,40
NALL
EALL
NSEL,S,LOC,X,11.99,12.627      ! Outside Shell Transition
NSEL,R,LOC,Y,146.05,146.69
SF,ALL,PRES,40
NALL
EALL
NSEL,S,LOC,X,12.623,12.627      ! Outside Shell
NSEL,R,LOC,Y,146.67,156.01
SF,ALL,PRES,40
NALL
EALL
NSEL,S,LOC,X,12.24,12.626      ! Top of Shell
NSEL,R,LOC,Y,155.99,156.01
SF,ALL,PRES,40
NALL
EALL
NSEL,S,LOC,X,9.624,12.24      ! Top of Locking Ring
NSEL,R,LOC,Y,155.99,156.01
SF,ALL,PRES,40
NALL
EALL
NSEL,S,LOC,X,9.374,9.626      ! Transition to Lifting Ear
NSEL,R,LOC,Y,155.99,157.13
SF,ALL,PRES,40
NALL
EALL
NSEL,S,LOC,X,9.374,10.20      ! Underside of Lifting Ear
NSEL,R,LOC,Y,157.12,157.14
SF,ALL,PRES,40
NALL
EALL
NSEL,S,LOC,X,10.18,10.20      ! Side of Lifting Ear
NSEL,R,LOC,Y,157.12,158.14
SF,ALL,PRES,40
NALL
EALL
NSEL,S,LOC,X,7.93,10.20      ! Top of Lifting Ear
NSEL,R,LOC,Y,158.12,158.14
SF,ALL,PRES,40
NALL
EALL
NSEL,S,LOC,X,7.25,7.90      ! Top of Shield plug
NSEL,R,LOC,Y,158.12,158.14
SF,ALL,PRES,40
NALL
EALL
NSEL,S,LOC,X,7.26,7.27      ! Side of Siphon Port (Top)
NSEL,R,LOC,Y,157.12,158.14
```

```
SF,ALL,PRES,40
NALL
EALL
NSEL,S,LOC,X,5.88,7.27        ! Siphon Port Step (Top)
NSEL,R,LOC,Y,157.12,157.14
SF,ALL,PRES,40
NALL
EALL
NSEL,S,LOC,X,5.88,5.90        ! Side of Siphon Port (Mid)
NSEL,R,LOC,Y,156.13,157.14
SF,ALL,PRES,40
NALL
EALL
NSEL,S,LOC,X,5.4,5.9        ! Siphon Port Step (Mid)
NSEL,R,LOC,Y,156.13,156.15
SF,ALL,PRES,40
NALL
EALL
NSEL,S,LOC,X,5.46,5.47        ! Bottom Siphon Port (Side)
NSEL,R,LOC,Y,153.0,156.37
SF,ALL,PRES,40
NALL
EALL
NSEL,S,LOC,X,3.56,5.47        ! Bottom Siphon Port
NSEL,R,LOC,Y,153.0,153.2
SF,ALL,PRES,40
NALL
EALL
NSEL,S,LOC,X,3.55,3.57        ! Bottom Siphon Port (Side)
NSEL,R,LOC,Y,153.0,156.37
SF,ALL,PRES,40
NALL
EALL
NSEL,S,LOC,X,3.13,3.58        ! Siphon Port Step (Mid)
NSEL,R,LOC,Y,156.13,156.15
SF,ALL,PRES,40
NALL
EALL
NSEL,S,LOC,X,3.13,3.15        ! Side of Siphon Port (Mid)
NSEL,R,LOC,Y,156.13,157.14
SF,ALL,PRES,40
NALL
EALL
NSEL,S,LOC,X,1.75,3.15        ! Siphon Port Step (Top)
NSEL,R,LOC,Y,157.12,157.14
SF,ALL,PRES,40
NALL
EALL
NSEL,S,LOC,X,1.6,1.8        ! Side of Siphon Port (Top)
NSEL,R,LOC,Y,157.12,158.14
```

```
SF,ALL,PRES,40
NALL
EALL
NSEL,S,LOC,X,0,1.8          ! Top of Shield Plug
NSEL,R,LOC,Y,158.12,158.14
SF,ALL,PRES,40
NALL
EALL
SOLVE
SAVE
FINISH

/COM **** POSTPROCESSING ****
/POST1
SET,LAST
/TYPE,ALL,HIDC
/GLINE,ALL,0
RSYS,0
PLNSOL,S,INT
/DSCALE,,20
/REPLOT
LPATH,1,41                ! Bottom Plate
PRSECT
LPATH,6,46
PRSECT
LPATH,10,50
PRSECT
LPATH,50,52               ! Lower Shell
PRSECT
LPATH,62,64
PRSECT
LPATH,65,67
PRSECT
LPATH,100,101             ! Mid Shell
PRSECT
LPATH,122,123
PRSECT
LPATH,134,135
PRSECT
LPATH,156,157
PRSECT
LPATH,170,171
PRSECT
LPATH,180,181
PRSECT
LPATH,202,204             ! Upper Shell
PRSECT
LPATH,235,237
PRSECT
LPATH,985,989
```

```
PRSECT
LPATH,262,264
PRSECT
LPATH,277,279
PRSECT
LPATH,292,294
PRSECT
LPATH,601,641          ! Shield Plug
PRSECT
LPATH,601,613
PRSECT
LPATH,603,703
PRSECT
LPATH,606,706
PRSECT
LPATH,766,806
PRSECT
LPATH,748,808
PRSECT
LPATH,730,810
PRSECT
LPATH,736,815
PRSECT
LPATH,869,874
PRSECT
LPATH,870,875
PRSECT
LPATH,431,434          ! Locking Ring
PRSECT
LPATH,406,426
PRSECT
LPATH,404,424
PRSECT
SAVE
```

COMPUTER RUN COVER SHEET

Project Number:	KH-8009-8
Computer Code:	ANSYS®-PC
Software Version:	5.4
Computer System:	Windows 95 ®, Pentium® Processor
Computer Run File Number:	KH-8009-8-09
Unique Computer Run Filename:	POC1.otf
Run Description:	Load Case 1 Output
Run Date / Time:	13 November 1998 4:16:45 PM

Michael E. Cohen 2/4/99

Prepared By: Michael E. Cohen Date

2/4/99

Checked By: Zachary G. Sargent Date

REVISION	0	1	2		**PAGE 49 OF 129**
PREPARED BY / DATE	ZGS 4/17/97	ZGS 7/14/98	MEC 02/04/99		
CHECKED BY / DATE	JN 4/17/97	HSA 7/14/98	ZGS 02/04/99		

PARSONS

CLIENT: DE&S HANFORD, INC. **FILE NO:** KH-8009-8-09

PROJECT: MCO Final Design DOC. NO.: HNF-SD-SNF-DR-003, Rev. 2, Appendix 11

COMPUTER RUN COVER SHEET

Project Number:	KH-8009-8
Computer Code:	ANSYS®-PC
Software Version:	5.4
Computer System:	Windows 95 ®, Pentium® Processor
Computer Run File Number:	KH-8009-8-09
Unique Computer Run Filename:	POC2.inp
Run Description:	Load Case 2: 15 psi, 132°C
Creation Date / Time:	11 November 1998 1:11:29 PM

2/4/99

Prepared By: Michael E. Cohen Date

2/4/99

Checked By: Zachary G. Sargent Date

REVISION	0	1	2		PAGE 50 OF 129
PREPARED BY / DATE	ZGS 4/17/97	ZGS 7/14/98	mec 02/04/99		
CHECKED BY / DATE	JN 4/17/97	HSA 7/14/98	ZGS 02/04/99		

LISTING OF POC2.INP FILE

```
/BATCH,LIST
/FILENAM,POC2
/PREP7
/TITLE,MCO DESIGN- 375 DEGREES C, 15 PSI EXTERNAL PRESSURE, NO LIFT

TREF,70
TUNIF,270

/COM **** ELEMENT TYPES ****
ET,1,42,,,1                ! Shell
ET,2,42,,,1                ! Shield Plug
ET,3,42,,,1                ! Lifting & Locking Ring
ET,4,12                   ! Gap Elements Between Shield Plug & Shell
KEYOPT,4,7,1
ET,5,42,,,1                ! Bolt

/COM **** REAL CONSTANTS FOR GAP ELEMENTS ****
R,4,-90,1.0e8,-0.06,3.0       ! Shell/Shield Plug, Initially Open .06"
R,5,0,1.0e8,2.75e-03          ! L. Ring/Shield Plug, Under Bolt, Preloaded
R,6,0,1.0E8,0,2.0          ! Sealing Surface, closed

/COM ************* MATERIAL PROPERTIES *************
MP,DENS,1,490/1728          ! 304L SS
MP,NUXY,1,0.3

MP,DENS,5,490/1728          ! SA193 Grade B8M
MP,NUXY,5,0.3

/COM **** DEFINING TEMPERATURES FOR MPDATA ****
MPTEMP,1, 70,100,200,300,400,500
MPTEMP,7,600,650,700,750

/COM **** DEFINING ELASTIC MODULI FOR 304L & SA-193 ****
MPDATA,EX,1,1,28.3e+06,28.1e+06,27.6e+06,27.0e+06,26.5e+06,25.8e+06
MPDATA,EX,1,7,25.3e+06,25.1e+06,24.8e+06,24.5e+06
/COM                ! SA-193
MPDATA,EX,5,1,28.3e+06,28.1e+06,27.6e+06,27.0e+06,26.5e+06,25.8e+06
MPDATA,EX,5,7,25.3e+06,25.1e+06,24.8e+06,24.5e+06

/COM **** MEAN COEFFICIENTS OF THERMAL EXPANSION (in./in./(F) ****
! SA240 Gr 304L
MPDATA,ALPX,1,1,0,8.55e-06,8.79e-06,9.00e-06,9.19e-06,9.37e-06
MPDATA,ALPX,1,7,9.53e-06,9.61e-06,9.69e-06,9.76e-06

! SA193 Gr B8M
MPDATA,ALPX,5,1,0,8.54e-06,8.76e-06,8.97e-06,9.21e-06,9.42e-06
MPDATA,ALPX,5,7,9.60e-06,9.69e-06,9.76e-06,9.81e-06

/COM************* SHELL GEOMETRY ****************
IR=11.5               ! Internal Shell Radius @ Bottom
OR=12.000               ! Shell Outside Radius @ Bottom
IR2 = 12.02             ! Inside Radius at Collar Sealing Surface
OR2 = 12.625              ! Outside Radius at Collar Sealing Surface
```

```
IR3 = 12.25             ! Inside Radius at Collar-Lifting Ring Weld

/COM **** BOTTOM COVER PLATE  [DWG SK-2-300378] ****
N,1,,-1.32                ! Row 1
N,2,1.25,-1.32
N,3,2.13,-1.32
N,10,11.423,-1.32
FILL

N,41,0.00,-0.44         ! Row 3
N,42,1.25,-0.44
N,43,2.13,0.44
N,50,IR,0.44
FILL,43,50
N,52,OR,0.44
FILL,50,52

FILL,1,41,1,21,1,10       ! Middle Row
FILL,10,50,1,30
N,32,12,-0.32
FILL,30,32
FILL,10,32,1,11
N,53,IR,1.17
N,55,OR,1.17             ! Shell Stub/Weld
FILL,53,55

/COM **** SHELL [DWGS SK-2-300379 & SK-2-300461] ****
N,65,IR,6.68
N,67,OR,6.68
FILL
FILL,53,65,3,,3,3,1

/COM **** SINGLE ROW SHELL ****
N,100,IR,7.18            ! Inside
N,140,IR,71.68
N,180,IR,136.68

N,101,OR,7.18             ! Outside
N,141,OR,71.68
N,181,OR,136.68
FILL,100,140,20,,2,2,1,2.0
FILL,140,180,19,,2,2,1,.5

/COM **** DOUBLE ROW SHELL ****
N,190,IR,137.18           ! Transition to Double Row
N,192,OR,137.18
FILL

/COM **** BASE OF CASK THROAT--ELEVATION: 138 INCHES ****
N,217,IR,142.68           ! Transition to Double Row
N,219,OR,142.68
FILL
FILL,190,217,8,,3,3,1     ! Vertical Fill

/COM **** BOTTOM OF COLLAR TRANSITION ****
N,235,IR,146.06           ! Start of Transition to Large O.D &
```

```
N,237,OR,146.06               ! Assumed Location of Shield Plug Taper
FILL
N,238,IR,146.68
N,240,OR,146.68
FILL                     ! Horizontal Fill
FILL,217,235,5,,3,3,1         ! Vertical Fill

/COM **** TOP OF COLLAR TRANSITION ****
N,241,IR,147.31              ! End of Transition to Large O.D &
N,243,OR,147.31               ! Assumed Location of Shield Plug Taper
FILL                     ! Horizontal Fill
NGEN,2,3,241,243,1,,0.75

/COM **** COLLAR SEALING SURFACE ****
N,247,IR,149.63              ! Inside Radius of Sealing Surface
N,249,IR2,149.63              ! Outside Radius at Sealing Surface
FILL                     ! Horizontal Fill

/COM **** THICK WALL AT COLLAR TRANSITION ****
NGEN,2,10,240,249,3           ! Nodes 250-259 Coincident w/240-249 (by 3)
N,255,OR2,147.31             ! Outside Surface
N,261,OR2,149.63             ! Outside Surface
N,258,OR2,148.06
N,980,IR,149.38
N,981,11.755,149.38
N,982,IR2,149.38
N,983,12.317,149.38
N,984,OR2,149.38
N,990,OR2,146.68
FILL,240,990,1,251
NGEN,2,5,980,984,1,,-0.66
FILL,246,258,1,257
FILL,253,255,1,,1,3,3
FILL,237,990,1,991

/COM **** COLLAR AT BOTTOM EDGE OF PLUG (.155" above Sealing Surface) ****
NGEN,2,3,259,,,,0.245         ! Nodes 262

/COM **** COLLAR AT TOP EDGE OF PLUG (2" above bottom Edge) ****
NGEN,2,9,262,,,,2.00         ! Nodes 271
FILL,262,271,2

/COM **** COLLAR AT BASE OF THREADS ****
N,274,IR3,152.00
N,1000,IR2,152.00

/COM **** TOP TO COLLAR (WELD CLOSURE) ****
N,295,IR3,156.00
FILL,274,295
NGEN,3,1,259,295,3,(OR2-IR2)/2
NGEN,3,1,274,295,3,(OR2-IR3)/2

/COM************* LOCKING & LIFTING RING GEOMETRY *************
RING1=7.94
RING2=9.375
RING3=9.625
```

```
RING4=10.19
RING5=12.23
LOCAL,11,0,,152.00          ! Local System z=0 at Base of Ring
CSYS,11

/COM **** TOP EDGE ****
N,401,RING1,6.13
CSYS,O
N,404,9.375,158.13
FILL,401,404,,,1
N,406,RING4,158.13
FILL,404,406,,,1          ! Top Edge

/COM **** LIFTING SURFACE ****
CSYS,11
N,421,RING1,5.13
N,424,RING2,5.13
FILL,421,424
N,426,RING4,5.13
FILL,424,426
FILL,401,421,1,,10,6,1
N,431,RING1,6.13-1.56
N,434,RING2,6.13-1.56
FILL

/COM **** BOLTING SURFACE ****
N,441,RING1,4
N,444,RING3,4
FILL
N,445,10.9375-.6875,4        ! Inside Edge of Bolt Hole
N,447,10.9375+.6875,4        ! Outside Edge of Bolt Hole
FILL
N,910,10.9375-.6875,4
N,911,10.9375+.6875,4
N,448,RING5,4             ! O.D of Ring
CSYS,0                  ! Bolt Extension
N,924,10.25,152.00          ! Double Nodes @ Bolt for Gap elements
N,925,11.625,152.00
FILL,910,924,6,,2
FILL,911,925,6,,2
N,525,10.25,151.874         ! Bottom of Bolt Extension
N,527,11.625,151.874
FILL

/COM **** BOTTOM OF LIFTING/LOCKING RING ****
CSYS,11
NGEN,2,70,441,448,1,,-4        ! Bottom Surface of Lifting/Locking Ring
FILL,441,511,6,,10,8,1        ! Fill in Lifting/Locking Ring

/COM************** SHIELD PLUG (offset y by 158.25) **************
LOCAL,20,0,,158.13
TYPE,2
PLUGR1=11.975
PLUGR2=11.45
PLUGR3=11.25
PLUGR4=7.89
```

```
/COM **** NODES AT PLUG AXIS (r=0) ****
N,601
N,602,0,-1
N,603,0,-1.994
N,606,0,-4.994
FILL,603,606,2,604
N,607,0,-6.25
N,610,0,-8.25
FILL,607,610,2,608
N,611,0,-8.75
N,613,0,-10.5
FILL,611,613

/COM **** NODAL GENERATION ****
NGEN,2,20,601,613,1,0.8825
NGEN,2,20,621,633,1,0.8825          ! Id Large Opening
NGEN,2,20,642,653,1,0.6875
NGEN,2,20,662,673,1,0.6875          ! Id Medium Opening
NGEN,2,20,683,693,1,0.4235          ! Id Small Opening
NGEN,2,10,706,713,1,0.9515          ! Center of Opening

N,730,5.4665,-1.994             ! Od Small Opening
N,736,5.4665,-4.994
FILL,730,736,5,731
N,737,5.4665,-6.25
N,740,5.4665,-8.25
FILL,737,740,2,738
N,741,5.4665,-8.75
N,743,5.4665,-10.5
FILL,741,743
N,748,5.89,-1.0
NGEN,2,20,730,743,1,0.4235
FILL,748,750
N,766,7.265,0
NGEN,2,20,748,763,1,1.375
FILL,766,768
NGEN,3,20,766,768,1,0.3125
N,789,7.5775,-1.56
N,796,7.5775,-5.56
FILL,789,796,6
NGEN,2,20,789,796,1,0.3125
NGEN,3,20,777,783,1,0.3125

/COM **** UNDER LOCKING RING ****
N,824,8.5017,-6.25
N,827,8.5017,-8.25
FILL
N,828,8.5017,-8.75
N,830,8.5017,-10.5
FILL
NGEN,3,7,824,830,1,0.5616
NGEN,2,7,838,844,1,0.625
NGEN,2,7,845,851,1,0.6875     ! Under Bolt
N,859,11.625,-6.25
N,860,11.625,-6.917
```

```
N,861,11.625,-7.584
N,862,PLUGR2,-8.25
N,863,PLUGR2,-8.75
N,865,PLUGR3,-10.5
FILL,863,865,1
N,866,PLUGR1-0.288,-6.25
N,869,PLUGR1-0.288,-8.25
FILL,866,869,2
N,870,PLUGR1-0.288,-8.476
NGEN,2,5,866,870,1,0.288

/COM **** REFINING LIFTING EAR ****
CSYS,0
N,877,9.53,158.13
N,889,9.53,157.63
N,901,9.53,157.13
FILL,403,404,1,876
FILL,413,414,1,888
FILL,423,424,1,900
FILL,877,405,1,878
FILL,405,406,2,879,1
FILL,889,415,1,890
FILL,415,416,2,891,1
FILL,404,414,1,881
FILL,877,889,1,882
FILL,878,890,1,883
FILL,405,415,1,884
FILL,879,891,1,885
FILL,880,892,1,886
FILL,406,416,1,887
FILL,889,901,1,894
FILL,414,424,1,893
FILL,901,425,1,902
FILL,890,902,1,895
FILL,415,425,1,896
FILL,425,426,2,903,1
FILL,891,903,1,897
FILL,892,904,1,898
FILL,416,426,1,899
FILL,424,434,1,907
FILL,433,434,1,908
FILL,423,433,1,905
FILL,905,907

/COM **** COUPLING NODES ****
/COM **** BETWEEN LIFTING/LOCKING RING & SHELL ****
CP,1,UY,508,277          ! Start Threads
CP,2,UY,498,280
CP,3,UY,488,283
CP,4,UY,478,286
CP,5,UY,468,289
CP,6,UY,458,292

/COM **** BETWEEN BOLT & LOCKING RING ****
CP,7,UY,445,910
CP,8,UX,445,910
```

```
CP,9,UY,447,911
CP,10,UX,447,911
*DO,I,1,7
CP,10+I,UY,445+10*I,910+2*I
*ENDDO
*DO,I,1,7
CP,17+I,UY,447+10*I,911+2*I
*ENDDO
*DO,I,1,7
CP,24+I,UX,445+10*I,910+2*I
*ENDDO
*DO,I,1,7
CP,31+I,UX,447+10*I,911+2*I
*ENDDO
NALL
EALL

/COM **** ELEMENT GENERATION FOR SHELL ****
TYPE,1
MAT,1

/COM **** BOTTOM OF SHELL ****
E,1,2,22,21
E,2,3,23,22
EGEN,8,1,-1
E,10,11,30
E,21,22,42,41
E,22,23,43,42
EGEN,10,1,-1
E,11,31,30
E,11,32,31

/COM **** SHELL ****
E,50,51,54,53
EGEN,2,1,-1
EGEN,5,3,-2

/COM **** FIRST TRANSITION ELEMENTS ****
E,65,66,100
E,100,66,101
E,67,101,66

/COM **** SINGLE SHELL ****
E,100,101,103,102
EGEN,40,2,-1

/COM **** SECOND TRANSITION ELEMENTS ****
E,190,180,191
E,180,181,191
E,181,192,191

/COM **** TOP SHELL (DOUBLE ELEMENT) ****
E,190,191,194,193
EGEN,2,1,-1
EGEN,18,3,-2
E,244,245,986,985
```

```
EGEN,2,1,-1
E,256,257,988,987
E,257,258,989,988
E,985,986,981,980
EGEN,4,1,-1
E,980,981,248,247
EGEN,2,1,-1
E,982,983,260,249
E,983,984,261,260

/COM **** COLLAR TRANSITION & THREADED REGIONS ****
E,237,991,251,240
E,991,990,251
E,240,251,254,253
E,251,990,255,254
E,253,254,257,256
EGEN,2,1,-1
E,259,260,263,262
EGEN,2,1,-1
EGEN,12,3,-2
E,271,274,1000

/COM **** MERGE COINCIDENT NODES FOR SHELL ****
ESEL,S,TYPE,,1
NSLE
NUMMRG,NODE,
EALL
NALL
/COM **** END OF SHELL/COLLAR ELEMENT GENERATION ****

/COM **** LOCKING/LIFTING RING ELEMENTS ****
TYPE,3
MAT,1
E,411,412,402,401
EGEN,2,1,-1
EGEN,2,10,-2
E,413,888,876,403
E,881,404,876
E,888,881,876
E,888,414,881
E,881,882,877,404
E,414,889,882,881
E,882,883,878,877
E,889,890,883,882
E,883,884,405,878
E,890,415,884,883
E,884,885,879,405
E,415,891,885,884
E,885,886,880,879
E,891,892,886,885
E,886,887,406,880
E,892,416,887,886
E,423,900,888,413
E,893,414,888
E,900,893,888
E,900,424,893
```

```
E,893,894,889,414
E,424,901,894,893
E,894,895,890,889
E,901,902,895,894
E,895,896,415,890
E,902,425,896,895
E,896,897,891,415
E,425,903,897,896
E,897,898,892,891
E,903,904,898,897
E,898,899,416,892
E,904,426,899,898
E,431,432,422,421
E,905,423,422
E,432,905,422
E,432,433,905
E,905,906,900,423
E,433,908,906,905
E,906,907,424,900
E,908,434,907,906
E,441,442,432,431
EGEN,2,1,-1
E,443,908,433
E,443,444,434,908
E,451,452,442,441
EGEN,3,1,-1
EGEN,7,10,-3
E,454,912,910,444
E,464,914,912,454
E,474,916,914,464
E,484,918,916,474
E,494,920,918,484
E,504,922,920,494
E,514,924,922,504
E,458,448,911,913
E,468,458,913,915
E,478,468,915,917
E,488,478,917,919
E,498,488,919,921
E,508,498,921,923
E,518,508,923,925

/COM **** BOLT ****
TYPE,5
MAT,5
E,455,456,446,445
EGEN,8,10,-1
E,456,457,447,446
EGEN,8,10,-1
/COM************* END OF LOCKING/LIFTING RING *************

/COM **** SHIELD PLUG ELEMENTS ****
TYPE,2
MAT,1
E,602,622,621,601
EGEN,12,1,-1
```

```
EGEN,2,20,-12
EGEN,3,20,-11
EGEN,2,20,-10
E,707,717,716,706
EGEN,7,1,-1
E,717,737,736,716
EGEN,7,1,-1
E,731,751,750,730
EGEN,13,1,-1
E,749,769,768,748
EGEN,15,1,-1
E,767,787,786,766
EGEN,17,1,-1
EGEN,2,20,-17
E,818,825,824,817
EGEN,6,1,-1
EGEN,5,7,-6
E,853,860,859,852
EGEN,6,1,-1
E,860,867,866,859
EGEN,3,1,-1
E,867,872,871,866
EGEN,4,1,-1
/COM************* END OF SHIELD PLUG *************

/COM************* CONTACT ELEMENTS *************
/COM **** BETWEEN LOCKING RING & SHIELD PLUG ****
TYPE,4
REAL,4
E,806,401
E,807,411
E,808,421
E,809,431
E,810,441
E,811,451
E,812,461
E,813,471
E,814,481
E,815,491
E,816,501
E,817,511

/COM **** BETWEEN SHIELD PLUG & BOTTOM OF BOLT
REAL,5
E,845,525
E,852,526
E,859,527

/COM **** BETWEEN SHIELD PLUG & SHELL (ABOVE SEAL)
REAL,4
E,871,271
E,872,268
E,873,265
E,874,262

/COM **** BETWEEN SHIELD PLUG & SHELL (BELOW SEAL)
```

```
E,863,980

/COM **** BETWEEN SHIELD PLUG AND SEAL LIP
TYPE,4
REAL,6
E,247,862
E,248,870
E,249,875
/COM************* END GAP ELEMENTS *************

/COM************* BOUNDARY CONDITIONS AT AXIS (X=0) ************
CSYS,0
NSEL,S,LOC,X,0
D,ALL,UX,0
NALL
EALL
NSEL,S,NODE,,10
D,ALL,UY,O
NALL
EALL
SAVE
FINISH


!****************************************************************
/COM****************      SOLUTION PHASE       *************
/SOLUTION

/COM **** APPLYING 15 PSI EXTERNAL PRESSURE ****
NALL
EALL
NSEL,S,LOC,X,0,11.425         ! Bottom Plate
NSEL,R,LOC,Y,-1.31,-1.33
SF,ALL,PRES,15
NALL
EALL
NSEL,S,LOC,X,11.422,12.01      ! 30 d Chamfer
NSEL,R,LOC,Y,-1.33,-0.31
SF,ALL,PRES,15
NALL
EALL
NSEL,S,LOC,X,11.99,12.01       ! Outside shell
NSEL,R,LOC,Y,-0.33,146.1
SF,ALL,PRES,15
NALL
EALL
NSEL,S,LOC,X,11.99,12.627      ! Outside Shell Transition
NSEL,R,LOC,Y,146.05,146.69
SF,ALL,PRES,15
NALL
EALL
NSEL,S,LOC,X,12.623,12.627     ! Outside Shell
NSEL,R,LOC,Y,146.67,156.01
SF,ALL,PRES,15
NALL
EALL
```

```
NSEL,S,LOC,X,12.24,12.626     ! Top of Shell
NSEL,R,LOC,Y,155.99,156.01
SF,ALL,PRES,15
NALL
EALL
NSEL,S,LOC,X,9.624,12.24      ! Top of Locking Ring
NSEL,R,LOC,Y,155.99,156.01
SF,ALL,PRES,15
NALL
EALL
NSEL,S,LOC,X,9.374,9.626      ! Transition to Lifting Ear
NSEL,R,LOC,Y,155.99,157.13
SF,ALL,PRES,15
NALL
EALL
NSEL,S,LOC,X,9.374,10.20      ! Underside of Lifting Ear
NSEL,R,LOC,Y,157.12,157.14
SF,ALL,PRES,15
NALL
EALL
NSEL,S,LOC,X,10.18,10.20      ! Side of Lifting Ear
NSEL,R,LOC,Y,157.12,158.14
SF,ALL,PRES,15
NALL
EALL
NSEL,S,LOC,X,7.93,10.20       ! Top of Lifting Ear
NSEL,R,LOC,Y,158.12,158.14
SF,ALL,PRES,15
NALL
EALL
NSEL,S,LOC,X,7.25,7.90        ! Top of Shield plug
NSEL,R,LOC,Y,158.12,158.14
SF,ALL,PRES,15
NALL
EALL
NSEL,S,LOC,X,7.26,7.27        ! Side of Siphon Port (Top)
NSEL,R,LOC,Y,157.12,158.14
SF,ALL,PRES,15
NALL
EALL
NSEL,S,LOC,X,5.88,7.27        ! Siphon Port Step (Top)
NSEL,R,LOC,Y,157.12,157.14
SF,ALL,PRES,15
NALL
EALL
NSEL,S,LOC,X,5.88,5.90        ! Side of Siphon Port (Mid)
NSEL,R,LOC,Y,156.13,157.14
SF,ALL,PRES,15
NALL
EALL
NSEL,S,LOC,X,5.4,5.9         ! Siphon Port Step (Mid)
NSEL,R,LOC,Y,156.13,156.15
SF,ALL,PRES,15
NALL
EALL
NSEL,S,LOC,X,5.46,5.47        ! Bottom Siphon Port (Side)
```

```
NSEL,R,LOC,Y,153.0,156.37
SF,ALL,PRES,15
NALL
EALL
NSEL,S,LOC,X,3.56,5.47        ! Bottom Siphon Port
NSEL,R,LOC,Y,153.0,153.2
SF,ALL,PRES,15
NALL
EALL
NSEL,S,LOC,X,3.55,3.57        ! Bottom Siphon Port (Side)
NSEL,R,LOC,Y,153.0,156.37
SF,ALL,PRES,15
NALL
EALL
NSEL,S,LOC,X,3.13,3.58        ! Siphon Port Step (Mid)
NSEL,R,LOC,Y,156.13,156.15
SF,ALL,PRES,15
NALL
EALL
NSEL,S,LOC,X,3.13,3.15        ! Side of Siphon Port (Mid)
NSEL,R,LOC,Y,156.13,157.14
SF,ALL,PRES,15
NALL
EALL
NSEL,S,LOC,X,1.75,3.15        ! Siphon Port Step (Top)
NSEL,R,LOC,Y,157.12,157.14
SF,ALL,PRES,15
NALL
EALL
NSEL,S,LOC,X,1.6,1.8        ! Side of Siphon Port (Top)
NSEL,R,LOC,Y,157.12,158.14
SF,ALL,PRES,15
NALL
EALL
NSEL,S,LOC,X,0,1.8          ! Top of Shield Plug
NSEL,R,LOC,Y,158.12,158.14
SF,ALL,PRES,15
NALL
EALL
SOLVE
SAVE
FINISH


/COM **** POSTPROCESSING ****
/POST1
SET,LAST
/TYPE,ALL,HIDC
/GLINE,ALL,0
RSYS,0
PLNSOL,S,INT
/DSCALE,,20
/REPLOT
LPATH,1,41              ! Bottom Plate
PRSECT
LPATH,6,46
```

```
PRSECT
LPATH,10,50
PRSECT
LPATH,50,52             ! Lower Shell
PRSECT
LPATH,62,64
PRSECT
LPATH,65,67
PRSECT
LPATH,100,101           ! Mid Shell
PRSECT
LPATH,122,123
PRSECT
LPATH,134,135
PRSECT
LPATH,156,157
PRSECT
LPATH,170,171
PRSECT
LPATH,180,181
PRSECT
LPATH,202,204           ! Upper Shell
PRSECT
LPATH,235,237
PRSECT
LPATH,985,989
PRSECT
LPATH,262,264
PRSECT
LPATH,277,279
PRSECT
LPATH,292,294
PRSECT
LPATH,601,641           ! Shield Plug
PRSECT
LPATH,601,613
PRSECT
LPATH,603,703
PRSECT
LPATH,606,706
PRSECT
LPATH,766,806
PRSECT
LPATH,748,808
PRSECT
LPATH,730,810
PRSECT
LPATH,736,815
PRSECT
LPATH,869,874
PRSECT
LPATH,870,875
PRSECT
LPATH,431,434           ! Locking Ring
PRSECT
LPATH,406,426
```

```
PRSECT
LPATH,404,424
PRSECT
PRSECT
SAVE
```

COMPUTER RUN COVER SHEET

Project Number:	KH-8009-8
Computer Code:	ANSYS®-PC
Software Version:	5.4
Computer System:	WINDOWS 95 ®, Pentium® Processor
Computer Run File Number:	KH-8009-8-09
Unique Computer Run Filename:	POC2.otf
Run Description:	Load Case 2 Output
Run Date / Time:	13 November 1998 4:18:38 PM

Michael E Cohen 2/4/99

Prepared By: Michael E. Cohen Date

2/4/99

Checked By: Zachary G. Sargent Date

REVISION	0	1	2		**PAGE 66**
PREPARED BY / DATE	ZGS 4/17/97	ZGS 7/14/98	MEC 02/04/99		**OF 129**
CHECKED BY / DATE	JN 4/17/97	HSA 7/14/98	ZGS 02/04/99		

PARSONS

CLIENT: DE&S HANFORD, INC. **FILE NO:** KH-8009-8-09

PROJECT: MCO Final Design DOC. NO.: HNF-SD-SNF-DR-003, Rev. 2, Appendix 11

COMPUTER RUN COVER SHEET

Project Number:	KH-8009-8
Computer Code:	ANSYS®-PC
Software Version:	5.4
Computer System:	Windows 95®, Pentium® Processor
Computer Run File Number:	KH-8009-8-09
Unique Computer Run Filename:	MCO132.inp
Run Description:	Load Case 3: 189 psi, 132°C
Creation Date / Time:	11 November 1998 1:11:29 PM

2/4/99

Prepared By: Michael E. Cohen Date

2/4/99

Checked By: Zachary G. Sargent Date

REVISION	0	1	2		PAGE 67 OF 129
PREPARED BY / DATE	ZGS 4/17/97	ZGS 7/14/98	mec 02/04/99		
CHECKED BY / DATE	JN 4/17/97	HSA 7/14/98	ZGS 02/04/99		

LISTING OF MCO132.INP FILE

```
/BATCH,LIST
/FILENAM,MCO132
/PREP7
/TITLE,MCO DESIGN- 132 DEGREES C, 189 PSI PRESSURE

TREF,70
TUNIF,270

/COM ************* ELEMENT TYPES *************
ET,1,42,,,1                         ! Shell & Collar
ET,2,42,,,1                       ! Bolts
ET,3,42,,,1                          ! Locking Ring
ET,4,42,,,1                          ! Shield Plug & Guard Plate
ET,5,12                              ! Gap Elements
KEYOPT,5,7,1

/COM ************* REAL CONSTANTS FOR GAP ELEMENTS *************
R,4,-90,1.0e8,-0.045,3.0        ! Shell/Shield Plug, Initially Open 0.045"
R,5,0,1.0e8,2.75e-03          ! L. Ring/Shield Plug, Under Bolt, Preloaded
R,6,0,1.0e8,0,2.0            ! Sealing Surface, closed
R,8,0,2.42e7,0,2.0             ! Seal Spring, Max. Stiffness


/COM ************* MATERIAL PROPERTIES *************

/COM **** MATERIAL 1,  304L STAINLESS STEEL ****
MP,DENS,1,493/1728           ! 304L SS
MP,NUXY,1,0.3

/COM **** DEFINING TEMPERATURES FOR MPDATA ****
MPTEMP,1, 70,100,200,300,400,500
MPTEMP,7,600,650,700,750

/COM **** DEFINING ELASTIC MODULI FOR 304L ****
MPDATA,EX,1,1,28.3e+06,28.1e+06,27.6e+06,27.0e+06,26.5e+06,25.8e+06
MPDATA,EX,1,7,25.3e+06,25.1e+06,24.8e+06,24.5e+06

/COM **** MEAN COEFFICIENTS OF THERMAL EXPANSION (in./in./(F) ****
! SA240 Gr 304L
MPDATA,ALPX,1,1,0,8.55e-06,8.79e-06,9.00e-06,9.19e-06,9.37e-06
MPDATA,ALPX,1,7,9.53e-06,9.61e-06,9.69e-06,9.76e-06


/COM **** MATERIAL 2, SA-193 GRADE B8S ****
MP,DENS,2,473/1728
MP,NUXY,2,0.3

/COM **** DEFINING TEMPERATURES FOR MPDATA ****
MPTEMP,1, 70,100,200,300,400,500
MPTEMP,7,600,650,700,750

/COM                ! SA-193
MPDATA,EX,2,1,28.3e+06,28.1e+06,27.6e+06,27.0e+06,26.5e+06,25.8e+06
MPDATA,EX,2,7,25.3e+06,25.1e+06,24.8e+06,24.5e+06
```

```
! SA193 Gr B8M
MPDATA,ALPX,2,1,0,8.54e-06,8.76e-06,8.97e-06,9.21e-06,9.42e-06
MPDATA,ALPX,2,7,9.60e-06,9.69e-06,9.76e-06,9.81e-06

/COM **** MATERIAL 4 , F304N ****
MP,DENS,4,493/1728          ! 304L SS
MP,NUXY,4,0.3

/COM **** DEFINING TEMPERATURES FOR MPDATA ****
MPTEMP,1, 70,100,200,300,400,500
MPTEMP,7,600,650,700,750

/COM **** DEFINING ELASTIC MODULI FOR 304L ****
MPDATA,EX,4,1,28.3e+06,28.1e+06,27.6e+06,27.0e+06,26.5e+06,25.8e+06
MPDATA,EX,4,7,25.3e+06,25.1e+06,24.8e+06,24.5e+06

/COM **** MEAN COEFFICIENTS OF THERMAL EXPANSION (in./in./(F) ****
MPDATA,ALPX,4,1,0,8.55e-06,8.79e-06,9.00e-06,9.19e-06,9.37e-06
MPDATA,ALPX,4,7,9.53e-06,9.61e-06,9.69e-06,9.76e-06

/COM **** MATERIAL 5,  304L STAINLESS STEEL ****
MP,DENS,4,493/1728          ! 304L SS
MP,NUXY,4,0.3

/COM **** DEFINING TEMPERATURES FOR MPDATA ****
MPTEMP,1, 70,100,200,300,400,500
MPTEMP,7,600,650,700,750

/COM **** DEFINING ELASTIC MODULI FOR 304L ****
MPDATA,EX,5,1,28.3e+06,28.1e+06,27.6e+06,27.0e+06,26.5e+06,25.8e+06
MPDATA,EX,5,7,25.3e+06,25.1e+06,24.8e+06,24.5e+06

/COM **** MEAN COEFFICIENTS OF THERMAL EXPANSION (in./in./(F) ****
! SA240 Gr 304L
MPDATA,ALPX,5,1,0,8.55e-06,8.79e-06,9.00e-06,9.19e-06,9.37e-06
MPDATA,ALPX,5,7,9.53e-06,9.61e-06,9.69e-06,9.76e-06

/COM ************* SHELL GEOMETRY ****************
IR=11.49              ! Internal Shell Radius @ Bottom
OR=12.000               ! Shell Outside Radius @ Bottom
IR2 = 12.02            ! Inside Radius at Collar Sealing Surface
OR2 = 12.655             ! Outside Radius at Collar Sealing Surface
IR3 = 12.284            ! Inside Radius at Collar-Lifting Ring Weld
IR4=12.174            ! Inside Radius

/COM **** BOTTOM  PLATE   [DWG SK-2-300378] ****
N,1,,-1.32                 ! Row 1
N,2,1.25,-1.32
N,3,2.13,-1.32
N,10,11.423,-1.32
FILL

N,41,0.00,-0.19              ! Row 3
N,42,1.25,-0.19
N,43,2.13,0.69
```

```
N,50,IR,0.69
FILL,43,50
N,52,OR,0.69
FILL,50,52

FILL,1,41,1,21,1,10         ! Middle Row
FILL,10,50,1,30
N,32,12,-0.32
FILL,30,32
FILL,10,32,1,11
N,53,IR,1.17
N,55,OR,1.17               ! Shell Stub/Weld
FILL,53,55
FILL,50,53,1,1101
FILL,51,54,1,1102
FILL,52,55,1,1103

/COM **** SHELL [DWGS SK-2-300379 & SK-2-300461] ****
N,65,IR,6.68
N,67,OR,6.68
FILL
FILL,53,65,3,,3,3,1
FILL,53,56,1,1104
FILL,55,58,1,1106
FILL,1104,1106
FILL,56,59,1,1107
FILL,58,61,1,1109
FILL,1107,1109
FILL,59,62,1,1110
FILL,61,64,1,1112
FILL,1110,1112
FILL,62,65,1,1113
FILL,64,67,1,1115
FILL,1113,1115

/COM **** SINGLE ROW SHELL ****
N,100,IR,7.18              ! Inside
N,140,IR,71.68
N,180,IR,136.68
N,101,OR,7.18               ! Outside
N,141,OR,71.68
N,181,OR,136.68
FILL,100,140,20,,2,2,1,2.0
FILL,140,180,19,,2,2,1,.5
FILL,100,102,2,1116,2
FILL,102,104,2,1120,2
FILL,104,106,2,1124,2
FILL,106,108,2,1128,2
FILL,108,110,2,1132,2
FILL,110,112,2,1136,2
FILL,112,114,2,1140,2
FILL,114,116,2,1144,2
NGEN,2,1,1116,1146,2,0.50

/COM **** DOUBLE ROW SHELL ****
N,190,IR,137.18             ! Transition to Double Row
```

```
N,192,OR,137.18
FILL

/COM **** BASE OF CASK THROAT--ELEVATION: 138 INCHES ****
N,217,IR,142.68          ! Transition to Double Row
N,219,OR,142.68
FILL
FILL,190,217,8,,3,3,1    ! Vertical Fill

/COM **** BOTTOM OF COLLAR TRANSITION ****
N,235,IR,146.06          ! Start of Transition to Large O.D &
N,237,OR,146.06           ! Assumed Location of Shield Plug Taper
FILL
N,238,IR,146.68
N,240,OR,146.68
FILL               ! Horizontal Fill
FILL,217,235,5,,3,3,1    ! Vertical Fill

/COM **** TOP OF COLLAR TRANSITION ****
N,241,IR,147.31         ! End of Transition to Large O.D &
N,243,OR,147.31          ! Assumed Location of Shield Plug Taper
FILL               ! Horizontal Fill
NGEN,2,3,241,243,1,,0.75

/COM **** COLLAR SEALING SURFACE ****
N,247,IR,149.63         ! Inside Radius of Sealing Surface
N,249,IR2,149.63         ! Outside Radius at Sealing Surface
FILL               ! Horizontal Fill

/COM **** THICK WALL AT COLLAR TRANSITION ****
NGEN,2,10,240,249,3       ! Nodes 250-259 Coincident w/240-249 (by 3)
N,255,OR2,147.31         ! Outside Surface
N,261,OR2,149.63         ! Outside Surface
N,258,OR2,148.06
N,980,IR,149.38
N,981,11.755,149.38
N,982,IR2,149.38
N,983,12.317,149.38
N,984,OR2,149.38
N,990,OR2,146.68
FILL,240,990,1,251
NGEN,2,5,980,984,1,,-0.66
FILL,246,258,1,257
FILL,253,255,1,,1,3,3
FILL,237,990,1,991

/COM **** COLLAR AT BOTTOM EDGE OF PLUG (.155" above Sealing Surface) ****
NGEN,2,3,259,,,,0.175       ! Nodes 262

/COM **** COLLAR AT TOP EDGE OF PLUG (1.44" above bottom Edge) ****
NGEN,2,9,262,,,,1.655      ! Nodes 271
FILL,262,271,2
NGEN,3,1,259,271,1,(OR2-IR2)/2

/COM **** COLLAR AT BASE OF THREADS ****
N,274,IR4,151.58
```

```
N,1000,IR2,151.58

/COM **** TOP TO COLLAR (WELD CLOSURE) ****
N,277,IR4,152.26
N,280,IR4,152.95
N,283,IR4,153.63
N,286,IR4,154.32
N,289,IR4,154.725
N,290,12.47,154.725
N,291,OR2,154.725
N,292,IR3,155.30
N,295,IR3,155.875
N,300,IR3,154.725
NGEN,2,1,274,289,3,0.27
NGEN,2,1,275,290,3,0.211
NGEN,3,1,292,295,1,(OR2-IR3)/2

/COM ************* LOCKING & LIFTING RING GEOMETRY *************
RING1=7.8775                    ! Inner Radius
RING2=9.375                     ! Inside Lip
RING3=9.625                     ! Inside Lip, Bottom of Transition
RING4=10.19                     ! Outside Lip
RING5=12.065                    ! Outside Radius No Threads
RING6=12.174                    ! Outside Radius
LOCAL,15,0,,151.58               ! Local System z=0 at Base of Lifting Ring

/COM **** TOP EDGE ****
N,401,RING1,6.50
CSYS,0
N,404,RING2,158.08
FILL,401,404,,,1
N,405,9.53,158.08
N,900,9.75,158.08
N,901,9.97,158.08
N,406,RING4,158.08


/COM **** LIFTING SURFACE ****
CSYS,15
N,421,RING1,5.50
N,424,RING2,5.50
FILL,421,424
N,425,9.53,5.50
N,904,9.75,5.50
N,905,9.97,5.50
N,426,RING4,5.50
FILL,401,421,1,,10,6,1
FILL,900,904,1,902
FILL,901,905,1,903
N,431,RING1,6.50-1.56
N,434,RING2,6.50-1.56
FILL

/COM **** BOLTING SURFACE ****
N,441,RING1,4.37
N,444,RING3,4.37
```

```
FILL
NGEN,2,10,441,444,,,-0.38
NGEN,2,10,451,454,,,-0.64
NGEN,2,10,461,464,,,-0.61
NGEN,2,10,471,474,,,-0.69
NGEN,2,10,481,484,,,-0.68
NGEN,2,10,491,494,,,-0.69
NGEN,2,10,501,504,,,-0.68
N,445,10.875-0.75,4.37          ! Inside Edge of Bolt Hole
N,447,10.875+0.75,4.37           ! Outside Edge of Bolt Hole
FILL
N,910,10.875-0.75,4.37            ! Double Nodes @ Bolt for Gap elements
N,911,10.875+0.75,4.37
N,912,10.875-0.75,3.99
N,913,10.875+0.75,3.99
N,455,10.875-0.75,3.99
N,457,10.875+0.75,3.99
FILL,455,457
N,914,10.875-0.75,3.35
N,915,10.875+0.75,3.35
N,465,10.875-0.75,3.35
N,467,10.875+0.75,3.35
FILL,465,467
N,916,10.875-0.75,2.74
N,917,10.875+0.75,2.74
N,475,10.875-0.75,2.74
N,477,10.875+0.75,2.74
FILL,475,477
N,918,10.875-0.75,2.05
N,919,10.875+0.75,2.05
N,485,10.875-0.75,2.05
N,487,10.875+0.75,2.05
FILL,485,487
N,920,10.875-0.75,1.37
N,921,10.875+0.75,1.37
N,495,10.875-0.75,1.37
N,497,10.875+0.75,1.37
FILL,495,497
N,922,10.875-0.75,0.68
N,923,10.875+0.75,0.68
N,505,10.875-0.75,0.68
N,507,10.875+0.75,0.68
FILL,505,507
N,924,10.875-0.75,0.00
N,925,10.875+0.75,0.00
N,515,10.875-0.75,0.00
N,517,10.875+0.75,0.00
FILL,515,517
N,525,10.125,-0.119               ! Bottom of Bolt Extension
N,527,11.625,-0.119
FILL,525,527

/COM ****CHAMFER  AND THREADS****
N,448,RING5-.22,4.37               ! O.D of Ring at Chamfer
N,458,RING5,3.99
N,469,RING5,3.35
```

```
N,468,RING6,3.35            ! Top of Threads
N,479,RING6,3.145
N,478,RING6,2.74
N,488,RING6,2.05
N,498,RING6,1.37
N,508,RING6,0.68
N,518,RING6,0.00            ! Bottom of Threads


/COM ************* SHIELD PLUG *************
PLUGR1=11.975
PLUGR2=11.45
PLUGR3=11.25
PLUGR4=7.8775
LOCAL,20,0,,158.21           ! Local System z=0 at Top Left of Shield Plug

/COM **** NODES AT PLUG AXIS (r=0) ****
N,601
N,602,0,-1
N,603,0,-1.994
N,606,0,-4.994
FILL,603,606,2,604,1
N,607,0,-6.75
N,610,0,-8.405
FILL,607,610,2,608,1
N,611,0,-9.374
N,613,0,-10.5
FILL,611,613

/COM **** NODAL GENERATION ****
NGEN,2,20,601,613,1,0.8825
NGEN,2,20,621,633,1,0.8825          ! Id Large Opening
NGEN,2,20,642,653,1,0.6875
NGEN,2,20,662,673,1,0.6875         ! Id Medium Opening
NGEN,2,20,683,693,1,0.4235         ! Id Small Opening
NGEN,2,10,706,713,1,0.9515         ! Center of Opening

N,730,5.4665,-1.994            ! Od Small Opening
N,736,5.4665,-4.994
FILL,730,736,5,731,1
N,737,5.4665,-6.75
N,740,5.4665,-8.405
FILL,737,740,2,738,1
N,741,5.4665,-9.374
N,743,5.4665,-10.5
FILL,741,743
N,748,5.89,-1.0
NGEN,2,20,730,743,1,0.4235
FILL,748,750
N,766,7.265,0
NGEN,2,20,748,763,1,1.375
FILL,766,768
N,786,7.571,0.00
N,787,7.571,-0.50
N,788,7.571,-1
N,789,7.571,-1.55
```

```
N,790,7.571,-2.10
N,791,7.571,-2.60
N,792,7.571,-3.10
N,793,7.571,-3.60
N,794,7.571,-4.10
N,795,7.571,-4.90
N,796,7.571,-5.55
N,797,7.571,-6.75

N,806,PLUGR4,0.00
N,550,PLUGR4,-0.13
N,807,PLUGR4,-0.63
N,808,PLUGR4,-1.13
N,809,PLUGR4,-1.69
N,810,PLUGR4,-2.26
N,811,PLUGR4,-2.64
N,812,PLUGR4,-3.28
N,813,PLUGR4,-3.89
N,814,PLUGR4,-4.58
N,815,PLUGR4,-5.26
N,816,PLUGR4,-5.95
N,817,PLUGR4,-6.75

/COM **** UNDER LOCKING RING ****
N,824,8.5017,-6.75
N,827,8.5017,-8.405
FILL
N,828,8.5017,-9.374
N,830,8.5017,-10.5
FILL
NGEN,2,20,778,783,1,0.306
NGEN,2,20,798,803,1,0.3065
NGEN,3,7,824,830,1,0.5616
NGEN,2,7,838,844,1,0.5001
NGEN,2,7,845,851,1,0.750       ! Under Bolt
N,859,11.625,-6.75
N,860,11.625,-7.302
N,861,11.625,-7.854
N,862,PLUGR2,-8.405
N,1100,PLUGR2,-8.83
N,863,PLUGR2,-9.374
N,865,PLUGR3,-10.5
FILL,863,865
N,866,PLUGR1-0.27,-6.75        ! Seal Tab
N,869,PLUGR1-0.27,-8.405
FILL,866,869,2,867,1
N,870,PLUGR1-0.27,-8.56
NGEN,2,5,866,870,1,0.27

/COM **** FILTER GUARD PLATE ****
LOCAL,40,0,,147.71             ! Local System z=0 at Bottom Left of Shield Plug
PLATE1=0.273
PLATE2=0.6575
PLATE3=1.357
PLATE4=10.25
PLATE5=11.25
```

```
N,1200,PLATE4,-0.85
N,1202,PLATE5,-0.85
FILL
NGEN,5,3,1200,1202,,,-0.85
NGEN,2,3,1212,1214,,,-0.25
N,1221,PLATE4,-5.75
N,1222,10.75,-5.75
N,1223,10.915,-5.75
FILL,1215,1221,1,1218
FILL,1223,1217,1,1220
FILL,1216,1222,1,1219
N,1237,6.4375,-4.25
FILL,1212,1237,3,1225,4
N,1249,3.578,-4.25
FILL,1237,1249,2,1241,4
NGEN,2,1,1225,1249,4,,-0.25
NGEN,2,2,1226,1250,4,,-1.25
FILL,1226,1228,1,1227,,7,4
N,1253,2.625,-2.375
N,1254,2.625,-2.575
N,1256,2.625,-4.25
FILL,1254,1256
N,1257,2.625,-4.5
N,1259,2.625,-5.75
FILL,1257,1259
NGEN,2,10,1253,1259,1,-0.5
NGEN,2,10,1263,1269,1,-0.768
N,1283,0.6575,-2.375
N,1284,0.6575,-2.575
N,1260,2.125
N,1270,1.357
N,1280,0.6575
N,1290,0.273
NGEN,3,1,1260,1290,10,,-0.5625


/COM **** COUPLING NODES ****
/COM **** BETWEEN LIFTING/LOCKING RING & SHELL ****
/COM **** BETWEEN BOLT & LOCKING RING ****

CP,54,UY,445,910      ! Inner Nodes
CP,55,UX,445,910
CP,56,UY,447,911      ! Outer Nodes
CP,57,UX,447,911
!
*DO,I,1,7             ! Going Down The Bolt
CP,57+I,UY,445+10*I,910+2*I
*ENDDO
!
*DO,I,1,7
CP,64+I,UY,447+10*I,911+2*I
*ENDDO
!
*DO,I,1,7
CP,71+I,UX,445+10*I,910+2*I
```

```
*ENDDO
!
*DO,I,1,7
CP,78+I,UX,447+10*I,911+2*I
*ENDDO
!
CP,100,UY,479,289          ! Threads
CP,101,UY,478,286
CP,102,UY,488,283
CP,103,UY,498,280
CP,104,UY,508,277
SAVE

/COM ************* ELEMENT GENERATION *************
/COM ************* SHELL *************

TYPE,1                ! Plane42 -
MAT,1                          ! Type 304L/304 Properties  Stainless Steel

E,1,2,22,21           ! Bottom Plate
EGEN,10,1,-1
E,11,32,31
E,21,22,42,41
EGEN,11,1,-1

E,50,51,1102,1101                ! Bottom Shell
EGEN,5,3,-1
E,1101,1102,54,53
EGEN,5,3,-1
E,51,52,1103,1102
EGEN,5,3,-1
E,1102,1103,55,54
EGEN,5,3,-1
E,65,66,100,
E,66,101,100
E,66,67,101
E,100,101,1117,1116
E,1116,1117,1119,1118
EGEN,8,4,-1
E,1118,1119,103,102
E,102,103,1121,1120
E,1122,1123,105,104
E,104,105,1125,1124
E,1126,1127,107,106
E,106,107,1129,1128
E,1130,1131,109,108
E,108,109,1133,1132
E,1134,1135,111,110
E,110,111,1137,1136
E,1138,1139,113,112
E,112,113,1141,1140
E,1142,1143,115,114
E,114,115,1145,1144
E,1146,1147,117,116
E,116,117,119,118
EGEN,32,2,-1
```

```
E,180,181,191
E,190,180,191
E,181,192,191
E,190,191,194,193
EGEN,9,3,-1
E,191,192,195,194
EGEN,9,3,-1

TYPE,1                   ! Collar
MAT,1                         ! Type 304/304L

E,217,218,221,220
EGEN,9,3,-1
E,218,219,222,221
EGEN,9,3,-1
E,244,245,986,985
E,985,986,981,980
E,980,981,248,247
EGEN,2,1,-3
E,237,991,251,250
E,991,990,251
E,250,251,254,253
E,251,990,255,254
E,253,254,257,246
E,254,255,258,257
E,246,257,988,987
E,257,258,989,988
E,987,988,983,982
E,988,989,984,983
E,982,983,260,259
E,983,984,261,260
E,259,260,263,262
EGEN,9,3,-1
E,271,274,1000
E,260,261,264,263
EGEN,12,3,-1
E,286,300,289
E,286,287,290,300
E,300,290,293,292
E,292,293,296,295


/COM ************* LOCKING RING *************

TYPE,3
MAT,4                                         ! F304N

E,411,412,402,401                        ! Top Going Down and
EGEN,11,10,-1                                 ! Left to Right
EGEN,3,1,-11
E,414,415,405,404
EGEN,2,10,-1
E,415,902,900,405
E,425,904,902,415
E,902,903,901,900
EGEN,2,2,-1
```

REVISION	0	1	2		PAGE 78
PREPARED BY / DATE	ZGS 4/17/97	ZGS 7/14/98	mc 02/04/99		OF 129
CHECKED BY / DATE	JN 4/17/97	HSA 7/14/98	ZGS 02/04/99		

```
E,903,416,406,901
E,905,426,416,903
E,454,912,910,444
E,464,914,912,454
E,474,916,914,464
E,484,918,916,474
E,494,920,918,484
E,504,922,920,494
E,514,924,922,504
E,913,458,448,911
E,915,468,458,913
E,917,478,468,915
E,919,488,478,917
E,921,498,488,919
E,923,508,498,921
E,925,518,508,923
SAVE

/COM ************* NITRONIC 60 BOLTS (MODELED AS RING) *************

TYPE,2
MAT,2                                                          ! SA-193

E,455,456,446,445
EGEN,8,10,-1
E,456,457,447,446
EGEN,8,10,-1
SAVE

/COM ************* SHIELD PLUG *************

TYPE,4
MAT,1                                                          ! 304L

E,602,622,621,601
EGEN,11,1,-1
EGEN,2,20,-11
E,613,1290,612
E,1290,1280,632,612
E,1280,633,632
E,633,1270,632
E,632,1270,652
E,1270,653,652

E,643,663,662,642
EGEN,10,1,-1
EGEN,2,20,-10
E,653,1260,652
E,1260,673,672,652
E,673,693,692,672
E,684,704,703,683
EGEN,10,1,-1
E,707,717,716,706
EGEN,7,1,-1
E,717,737,736,716
EGEN,7,1,-1
```

```
E,731,751,750,730
EGEN,13,1,-1
EGEN,4,20,-13
E,749,769,768,748
EGEN,2,1,-1
EGEN,3,20,-2
E,767,787,786,766
EGEN,2,1,-1
EGEN,2,20,-1
E,787,807,550,786
E,550,806,786
E,818,825,824,817
EGEN,6,1,-1
EGEN,5,7,-6
E,853,860,859,852
EGEN,3,1,-1
EGEN,2,7,-3
E,867,872,871,866
EGEN,4,1,-1
E,1100,862,855
E,856,1100,855
E,856,863,1100
E,857,864,863,856
EGEN,2,1,-1
SAVE

/COM ************* FILTER GUARD PLATE *************
TYPE,4
MAT,5

E,1200,1201,858,851
E,1201,1202,865,858
E,1203,1204,1201,1200
EGEN,2,1,-1
EGEN,6,3,-2
E,1221,1222,1219,1218
E,1222,1223,1220,1219
E,1226,1215,1212,1225
E,1227,1218,1215,1226
E,1228,1221,1218,1227
E,1230,1226,1225,1229
EGEN,3,1,-1
EGEN,6,4,-3
E,1257,1250,1249,1256
EGEN,3,1,-1
E,1264,1254,1253,1263
EGEN,6,1,-1
E,1271,1261,1260,1270
EGEN,9,1,-1
E,1281,1271,1270,1280
EGEN,4,1,-1
E,1291,1281,1280,1290
EGEN,2,1,-1


/COM ************* CONTACT ELEMENTS *************
```

```
/COM **** BETWEEN SHIELD PLUG & SHELL ****
TYPE,5
REAL,4
E,871,271
E,872,268
E,873,265
E,874,262
E,1100,980


/COM **** BETWEEN SHIELD PLUG & SEAL LIP ****
TYPE,5
REAL,6
E,248,870
E,249,875


TYPE,5
REAL,8
E,247,862
E,248,869


/COM **** UNDER THE BOLT ****
TYPE,5
REAL,5
E,845,525
E,852,526
E,859,527

/COM **** BETWEEN LOCKING RING & PLUG ****
TYPE,5
REAL,4
E,550,401
E,807,411
E,808,421
E,809,431
E,810,441
E,811,451
E,812,461
E,813,471
E,814,481
E,815,491
E,816,501



/COM ************* MERGING COINCIDENT NODES *************
ESEL,S,TYPE,,1
NSLE
NUMMRG,NODE
EALL
NALL
```

```
/COM ************* BOUNDARY CONDITIONS *************
CSYS,0
NSEL,S,LOC,X,0
D,ALL,UX,0
NALL
EALL
NSEL,S,NODE,,10
D,ALL,UY,0
NALL
EALL
SAVE


/COM **** LOAD 1: 189 PSI INTERNAL PRESSURE ****
NSEL,S,NODE,,41       ! Bottom Plate
NSEL,A,NODE,,42
NSEL,A,NODE,,43
NSEL,A,NODE,,44
NSEL,A,NODE,,45
NSEL,A,NODE,,46
NSEL,A,NODE,,47
NSEL,A,NODE,,48
NSEL,A,NODE,,49
NSEL,A,NODE,,50               ! Junction at Shell
NSEL,A,NODE,,1101             ! Bottom Shell
NSEL,A,NODE,,53
NSEL,A,NODE,,1104
NSEL,A,NODE,,56
NSEL,A,NODE,,1107
NSEL,A,NODE,,59
NSEL,A,NODE,,1110
NSEL,A,NODE,,62
NSEL,A,NODE,,1113
NSEL,A,NODE,,65
NSEL,A,NODE,,100
NSEL,A,NODE,,1116
NSEL,A,NODE,,1118
NSEL,A,NODE,,102
NSEL,A,NODE,,1120
NSEL,A,NODE,,1122
NSEL,A,NODE,,104
NSEL,A,NODE,,1124
NSEL,A,NODE,,1126
NSEL,A,NODE,,106
NSEL,A,NODE,,1128
NSEL,A,NODE,,1130
NSEL,A,NODE,,108
NSEL,A,NODE,,1132
NSEL,A,NODE,,1134
NSEL,A,NODE,,110
NSEL,A,NODE,,1136
NSEL,A,NODE,,1138
NSEL,A,NODE,,112
NSEL,A,NODE,,1140
NSEL,A,NODE,,1142
NSEL,A,NODE,,114
```

```
NSEL,A,NODE,,116
NSEL,A,NODE,,1144
NSEL,A,NODE,,1146
NSEL,A,NODE,,118
NSEL,A,NODE,,120
NSEL,A,NODE,,122
NSEL,A,NODE,,124
NSEL,A,NODE,,126
NSEL,A,NODE,,128
NSEL,A,NODE,,130
NSEL,A,NODE,,132
NSEL,A,NODE,,134
NSEL,A,NODE,,136
NSEL,A,NODE,,138
NSEL,A,NODE,,140
NSEL,A,NODE,,142
NSEL,A,NODE,,144
NSEL,A,NODE,,146
NSEL,A,NODE,,148
NSEL,A,NODE,,150
NSEL,A,NODE,,152
NSEL,A,NODE,,154
NSEL,A,NODE,,156
NSEL,A,NODE,,158
NSEL,A,NODE,,160
NSEL,A,NODE,,162
NSEL,A,NODE,,164
NSEL,A,NODE,,166
NSEL,A,NODE,,168
NSEL,A,NODE,,170
NSEL,A,NODE,,172
NSEL,A,NODE,,174
NSEL,A,NODE,,176
NSEL,A,NODE,,178
NSEL,A,NODE,,180
NSEL,A,NODE,,182
NSEL,A,NODE,,184
NSEL,A,NODE,,186
NSEL,A,NODE,,188
NSEL,A,NODE,,190
NSEL,A,NODE,,193
NSEL,A,NODE,,196
NSEL,A,NODE,,199
NSEL,A,NODE,,202
NSEL,A,NODE,,205
NSEL,A,NODE,,208
NSEL,A,NODE,,211
NSEL,A,NODE,,214
NSEL,A,NODE,,217
NSEL,A,NODE,,220
NSEL,A,NODE,,223
NSEL,A,NODE,,226
NSEL,A,NODE,,229
NSEL,A,NODE,,232
NSEL,A,NODE,,235
NSEL,A,NODE,,238
```

```
NSEL,A,NODE,,241
NSEL,A,NODE,,244
NSEL,A,NODE,,985
NSEL,A,NODE,,980
NSEL,A,NODE,,247             ! Shell at Sealing Surface
NSEL,A,NODE,,248
NSEL,A,NODE,,870             ! Seal Stop (Plug)
NSEL,A,NODE,,869
NSEL,A,NODE,,862
NSEL,A,NODE,,1100
NSEL,A,NODE,,863             ! Plug Taper
NSEL,A,NODE,,864
NSEL,A,NODE,,865             ! Start Plug Bottom
NSEL,A,NODE,,1202            ! Side of Guard Plate Ring
NSEL,A,NODE,,1205
NSEL,A,NODE,,1208
NSEL,A,NODE,,1211
NSEL,A,NODE,,1214
NSEL,A,NODE,,1217
NSEL,A,NODE,,1220
NSEL,A,NODE,,1223            ! Bottom of Guard Plate
NSEL,A,NODE,,1222
NSEL,A,NODE,,1221
NSEL,A,NODE,,1228
NSEL,A,NODE,,1232
NSEL,A,NODE,,1236
NSEL,A,NODE,,1240
NSEL,A,NODE,,1244
NSEL,A,NODE,,1248
NSEL,A,NODE,,1252
NSEL,A,NODE,,1259
NSEL,A,NODE,,1269
NSEL,A,NODE,,1279
SF,ALL,PRES,189
NALL
EALL

/COM **** SOLUTION ****
/SOLUTION
SOLVE

/COM **** POSTPROCESSING ****
/POST1
SET,LAST
/TYPE,ALL,HIDC
/GLINE,ALL,0
RSYS,0
PLNSOL,S,INT
/DSCALE,,20
/REPLOT
LPATH,1,41               ! Bottom Plate
PRSECT
LPATH,6,46
PRSECT
LPATH,10,50
PRSECT
```

```
LPATH,50,52             ! Lower Shell
PRSECT
LPATH,53,55
PRSECT
LPATH,62,64
PRSECT
LPATH,65,67
PRSECT
LPATH,100,101           ! Mid Shell
PRSECT
LPATH,122,123
PRSECT
LPATH,134,135
PRSECT
LPATH,156,157
PRSECT
LPATH,170,171
PRSECT
LPATH,180,181
PRSECT
LPATH,202,204           ! Upper Shell
PRSECT
LPATH,235,237
PRSECT
LPATH,985,989
PRSECT
LPATH,262,264
PRSECT
LPATH,277,279
PRSECT
LPATH,292,294
PRSECT
LPATH,601,641           ! Shield Plug
PRSECT
LPATH,601,613
PRSECT
LPATH,603,703
PRSECT
LPATH,606,706
PRSECT
LPATH,766,806
PRSECT
LPATH,748,808
PRSECT
LPATH,730,810
PRSECT
LPATH,736,815
PRSECT
LPATH,869,874
PRSECT
LPATH,870,875
PRSECT
LPATH,431,434           ! Locking Ring
PRSECT
LPATH,406,426
PRSECT
```

```
LPATH,404,424
PRSECT
SAVE
```

COMPUTER RUN COVER SHEET

Project Number:	KH-8009-8
Computer Code:	ANSYS®-PC
Software Version:	5.4
Computer System:	Windows 95®, Pentium® Processor
Computer Run File Number:	KH-8009-8-09
Unique Computer Run Filename:	MCO132.otf
Run Description:	Load Case 3 Output
Run Date / Time:	13 November 1998 4:38:52 PM

Michael E Cohen 2/4/99

Prepared By: Michael E. Cohen Date

2/4/99

Checked By: Zachary G. Sargent Date

REVISION	0	1	2		**PAGE 87**
PREPARED BY / DATE	ZGS 4/17/97	ZGS 7/14/98	MEC 02/04/99		**OF 129**
CHECKED BY / DATE	JN 4/17/97	HSA 7/14/98	ZGS 02/04/99		

COMPUTER RUN COVER SHEET

Project Number:	KH-8009-8
Computer Code:	ANSYS®-PC
Software Version:	5.4
Computer System:	Windows 95®, Pentium® Processor
Computer Run File Number:	KH-8009-8-09
Unique Computer Run Filename:	POC4.inp
Run Description:	Load Case 4: 189 psi, 132°C
Creation Date / Time:	11 November 1998 1:11:29 PM

Michael E. Cohen 2/4/99

Prepared By: Michael E. Cohen Date

2/4/99

Checked By: Zachary G. Sargent Date

REVISION	0	1	2		**PAGE 88**
PREPARED BY / DATE	ZGS 4/17/97	ZGS 7/14/98	02/04/99		**OF 129**
CHECKED BY / DATE	JN 4/17/97	HSA 7/14/98	02/04/99		

LISTING OF POC4.INP FILE

```
/BATCH,LIST
/FILENAM,POC4
/PREP7
/TITLE,MCO DESIGN- 132 DEGREES C, 189 PSI PRESSURE, LIFT, PRELOAD

TREF,70
TUNIF,270

ETAN=0.006              ! Tangent modulus

/COM ************* ELEMENT TYPES *************
ET,1,42,,,1                     ! Shell & Collar
ET,2,42,,,1                   ! Bolts
ET,3,42,,,1                      ! Locking Ring
ET,4,42,,,1                      ! Shield Plug
ET,5,12                          ! Gap Elements
KEYOPT,5,7,1

/COM ************* REAL CONSTANTS FOR GAP ELEMENTS *************
R,4,-90,1.0e8,-0.045,3.0       ! Shell/Shield Plug, Initially Open 0.045"
R,5,0,1.0e8,2.75e-03          ! L. Ring/Shield Plug, Under Bolt, Preloaded
R,6,0,1.0e8,0,2.0            ! Sealing Surface, closed
R,8,0,2.42e7,0,2.0            ! Seal Spring, Max. Stiffness


/COM ************* MATERIAL PROPERTIES *************

/COM **** MATERIAL 1,  304L STAINLESS STEEL ****
MP,DENS,1,493/1728         ! 304L SS
MP,NUXY,1,0.3

/COM **** DEFINING TEMPERATURES FOR MPDATA ****
MPTEMP,1, 70,100,200,300,400,500
MPTEMP,7,600,650,700,750

/COM **** DEFINING ELASTIC MODULI FOR 304L ****
MPDATA,EX,1,1,28.3e+06,28.1e+06,27.6e+06,27.0e+06,26.5e+06,25.8e+06
MPDATA,EX,1,7,25.3e+06,25.1e+06,24.8e+06,24.5e+06

/COM **** MEAN COEFFICIENTS OF THERMAL EXPANSION (in./in./(F) ****
! SA240 Gr 304L
MPDATA,ALPX,1,1,0,8.55e-06,8.79e-06,9.00e-06,9.19e-06,9.37e-06
MPDATA,ALPX,1,7,9.53e-06,9.61e-06,9.69e-06,9.76e-06


/COM **** MATERIAL 2, SA-193 GRADE B8S ****
MP,DENS,2,473/1728
MP,NUXY,2,0.3

/COM **** DEFINING TEMPERATURES FOR MPDATA ****
MPTEMP,1, 70,100,200,300,400,500
MPTEMP,7,600,650,700,750
```

```
/COM                    ! SA-193
MPDATA,EX,2,1,28.3e+06,28.1e+06,27.6e+06,27.0e+06,26.5e+06,25.8e+06
MPDATA,EX,2,7,25.3e+06,25.1e+06,24.8e+06,24.5e+06

! SA193 Gr B8M
MPDATA,ALPX,2,1,0,8.54e-06,8.76e-06,8.97e-06,9.21e-06,9.42e-06
MPDATA,ALPX,2,7,9.60e-06,9.69e-06,9.76e-06,9.81e-06

/COM **** MATERIAL 4 , F304N ****
MP,DENS,4,493/1728          ! 304L SS
MP,NUXY,4,0.3

/COM **** DEFINING TEMPERATURES FOR MPDATA ****
MPTEMP,1, 70,100,200,300,400,500
MPTEMP,7,600,650,700,750

/COM **** DEFINING ELASTIC MODULI FOR 304L ****
MPDATA,EX,4,1,28.3e+06,28.1e+06,27.6e+06,27.0e+06,26.5e+06,25.8e+06
MPDATA,EX,4,7,25.3e+06,25.1e+06,24.8e+06,24.5e+06

/COM **** MEAN COEFFICIENTS OF THERMAL EXPANSION (in./in./(F) ****
MPDATA,ALPX,4,1,0,8.55e-06,8.79e-06,9.00e-06,9.19e-06,9.37e-06
MPDATA,ALPX,4,7,9.53e-06,9.61e-06,9.69e-06,9.76e-06


/COM ************* SHELL GEOMETRY ****************
IR=11.49              ! Internal Shell Radius @ Bottom
OR=12.000               ! Shell Outside Radius @ Bottom
IR2 = 12.02            ! Inside Radius at Collar Sealing Surface
OR2 = 12.655             ! Outside Radius at Collar Sealing Surface
IR3 = 12.284            ! Inside Radius at Collar-Lifting Ring Weld
IR4=12.174            ! Inside Radius

/COM **** BOTTOM  PLATE   [DWG SK-2-300378] ****
N,1,,-1.32                  ! Row 1
N,2,1.25,-1.32
N,3,2.13,-1.32
N,10,11.423,-1.32
FILL

N,41,0.00,-0.19                   ! Row 3
N,42,1.25,-0.19
N,43,2.13,0.69
N,50,IR,0.69
FILL,43,50
N,52,OR,0.69
FILL,50,52

FILL,1,41,1,21,1,10          ! Middle Row
FILL,10,50,1,30
N,32,12,-0.32
FILL,30,32
FILL,10,32,1,11
N,53,IR,1.17
N,55,OR,1.17               ! Shell Stub/Weld
FILL,53,55
```

```
FILL,50,53,1,1101
FILL,51,54,1,1102
FILL,52,55,1,1103

/COM **** SHELL [DWGS SK-2-300379 & SK-2-300461] ****
N,65,IR,6.68
N,67,OR,6.68
FILL
FILL,53,65,3,,3,3,1
FILL,53,56,1,1104
FILL,55,58,1,1106
FILL,1104,1106
FILL,56,59,1,1107
FILL,58,61,1,1109
FILL,1107,1109
FILL,59,62,1,1110
FILL,61,64,1,1112
FILL,1110,1112
FILL,62,65,1,1113
FILL,64,67,1,1115
FILL,1113,1115

/COM **** SINGLE ROW SHELL ****
N,100,IR,7.18            ! Inside
N,140,IR,71.68
N,180,IR,136.68
N,101,OR,7.18             ! Outside
N,141,OR,71.68
N,181,OR,136.68
FILL,100,140,20,,2,2,1,2.0
FILL,140,180,19,,2,2,1,.5
FILL,100,102,2,1116,2
FILL,102,104,2,1120,2
FILL,104,106,2,1124,2
FILL,106,108,2,1128,2
FILL,108,110,2,1132,2
FILL,110,112,2,1136,2
FILL,112,114,2,1140,2
FILL,114,116,2,1144,2
NGEN,2,1,1116,1146,2,0.50

/COM **** DOUBLE ROW SHELL ****
N,190,IR,137.18           ! Transition to Double Row
N,192,OR,137.18
FILL

/COM **** BASE OF CASK THROAT--ELEVATION: 138 INCHES ****
N,217,IR,142.68            ! Transition to Double Row
N,219,OR,142.68
FILL
FILL,190,217,8,,3,3,1      ! Vertical Fill

/COM **** BOTTOM OF COLLAR TRANSITION ****
N,235,IR,146.06            ! Start of Transition to Large O.D &
N,237,OR,146.06             ! Assumed Location of Shield Plug Taper
FILL
```

```
N,238,IR,146.68
N,240,OR,146.68
FILL                    ! Horizontal Fill
FILL,217,235,5,,3,3,1         ! Vertical Fill

/COM **** TOP OF COLLAR TRANSITION ****
N,241,IR,147.31              ! End of Transition to Large O.D &
N,243,OR,147.31               ! Assumed Location of Shield Plug Taper
FILL                    ! Horizontal Fill
NGEN,2,3,241,243,1,,0.75

/COM **** COLLAR SEALING SURFACE ****
N,247,IR,149.63              ! Inside Radius of Sealing Surface
N,249,IR2,149.63              ! Outside Radius at Sealing Surface
FILL                    ! Horizontal Fill

/COM **** THICK WALL AT COLLAR TRANSITION ****
NGEN,2,10,240,249,3          ! Nodes 250-259 Coincident w/240-249 (by 3)
N,255,OR2,147.31              ! Outside Surface
N,261,OR2,149.63              ! Outside Surface
N,258,OR2,148.06
N,980,IR,149.38
N,981,11.755,149.38
N,982,IR2,149.38
N,983,12.317,149.38
N,984,OR2,149.38
N,990,OR2,146.68
FILL,240,990,1,251
NGEN,2,5,980,984,1,,-0.66
FILL,246,258,1,257
FILL,253,255,1,,1,3,3
FILL,237,990,1,991

/COM **** COLLAR AT BOTTOM EDGE OF PLUG (.155" above Sealing Surface) ****
NGEN,2,3,259,,,,0.175          ! Nodes 262

/COM **** COLLAR AT TOP EDGE OF PLUG (1.44" above bottom Edge) ****
NGEN,2,9,262,,,,1.655          ! Nodes 271
FILL,262,271,2
NGEN,3,1,259,271,1,(OR2-IR2)/2

/COM **** COLLAR AT BASE OF THREADS ****
N,274,IR4,151.58
N,1000,IR2,151.58

/COM **** TOP TO COLLAR (WELD CLOSURE) ****
N,277,IR4,152.26
N,280,IR4,152.95
N,283,IR4,153.63
N,286,IR4,154.32
N,289,IR4,154.725
N,290,12.47,154.725
N,291,OR2,154.725
N,292,IR3,155.30
N,295,IR3,155.875
N,300,IR3,154.725
```

```
NGEN,2,1,274,289,3,0.27
NGEN,2,1,275,290,3,0.211
NGEN,3,1,292,295,1,(OR2-IR3)/2

/COM ************ LOCKING & LIFTING RING GEOMETRY ************
RING1=7.8775                  ! Inner Radius
RING2=9.375                   ! Inside Lip
RING3=9.625                   ! Inside Lip, Bottom of Transition
RING4=10.19                   ! Outside Lip
RING5=12.065                  ! Outside Radius No Threads
RING6=12.174                  ! Outside Radius
LOCAL,15,0,,151.58             ! Local System z=0 at Base of Lifting Ring

/COM **** TOP EDGE ****
N,401,RING1,6.50
CSYS,0
N,404,RING2,158.08
FILL,401,404,,,1
N,405,9.53,158.08
N,900,9.75,158.08
N,901,9.97,158.08
N,406,RING4,158.08


/COM **** LIFTING SURFACE ****
CSYS,15
N,421,RING1,5.50
N,424,RING2,5.50
FILL,421,424
N,425,9.53,5.50
N,904,9.75,5.50
N,905,9.97,5.50
N,426,RING4,5.50
FILL,401,421,1,,10,6,1
FILL,900,904,1,902
FILL,901,905,1,903
N,431,RING1,6.50-1.56
N,434,RING2,6.50-1.56
FILL

/COM **** BOLTING SURFACE ****
N,441,RING1,4.37
N,444,RING3,4.37
FILL
NGEN,2,10,441,444,,,-0.38
NGEN,2,10,451,454,,,-0.64
NGEN,2,10,461,464,,,-0.61
NGEN,2,10,471,474,,,-0.69
NGEN,2,10,481,484,,,-0.68
NGEN,2,10,491,494,,,-0.69
NGEN,2,10,501,504,,,-0.68
N,445,10.875-0.75,4.37        ! Inside Edge of Bolt Hole
N,447,10.875+0.75,4.37        ! Outside Edge of Bolt Hole
FILL
N,910,10.875-0.75,4.37          ! Double Nodes @ Bolt for Gap elements
N,911,10.875+0.75,4.37
```

```
N,912,10.875-0.75,3.99
N,913,10.875+0.75,3.99
N,455,10.875-0.75,3.99
N,457,10.875+0.75,3.99
FILL,455,457
N,914,10.875-0.75,3.35
N,915,10.875+0.75,3.35
N,465,10.875-0.75,3.35
N,467,10.875+0.75,3.35
FILL,465,467
N,916,10.875-0.75,2.74
N,917,10.875+0.75,2.74
N,475,10.875-0.75,2.74
N,477,10.875+0.75,2.74
FILL,475,477
N,918,10.875-0.75,2.05
N,919,10.875+0.75,2.05
N,485,10.875-0.75,2.05
N,487,10.875+0.75,2.05
FILL,485,487
N,920,10.875-0.75,1.37
N,921,10.875+0.75,1.37
N,495,10.875-0.75,1.37
N,497,10.875+0.75,1.37
FILL,495,497
N,922,10.875-0.75,0.68
N,923,10.875+0.75,0.68
N,505,10.875-0.75,0.68
N,507,10.875+0.75,0.68
FILL,505,507
N,924,10.875-0.75,0.00
N,925,10.875+0.75,0.00
N,515,10.875-0.75,0.00
N,517,10.875+0.75,0.00
FILL,515,517
N,525,10.125,-0.119          ! Bottom of Bolt Extension
N,527,11.625,-0.119
FILL,525,527

/COM ****CHAMFER  AND THREADS****
N,448,RING5-.22,4.37           ! O.D of Ring at Chamfer
N,458,RING5,3.99
N,469,RING5,3.35
N,468,RING6,3.35             ! Top of Threads
N,479,RING6,3.145
N,478,RING6,2.74
N,488,RING6,2.05
N,498,RING6,1.37
N,508,RING6,0.68
N,518,RING6,0.00             ! Bottom of Threads


/COM ************* SHIELD PLUG *************
PLUGR1=11.975
PLUGR2=11.45
PLUGR3=11.25
```

```
PLUGR4=7.8775
LOCAL,20,0,,158.21                !Local System z=0 at Top Left of Shield Plug

/COM **** NODES AT PLUG AXIS (r=0) ****
N,601
N,602,0,-1
N,603,0,-1.994
N,606,0,-4.994
FILL,603,606,2,604,1
N,607,0,-6.75
N,610,0,-8.405
FILL,607,610,2,608,1
N,611,0,-9.374
N,613,0,-10.5
FILL,611,613

/COM **** NODAL GENERATION ****
NGEN,2,20,601,613,1,0.8825
NGEN,2,20,621,633,1,0.8825           ! Id Large Opening
NGEN,2,20,642,653,1,0.6875
NGEN,2,20,662,673,1,0.6875           ! Id Medium Opening
NGEN,2,20,683,693,1,0.4235           ! Id Small Opening
NGEN,2,10,706,713,1,0.9515           ! Center of Opening

N,730,5.4665,-1.994              ! Od Small Opening
N,736,5.4665,-4.994
FILL,730,736,5,731,1
N,737,5.4665,-6.75
N,740,5.4665,-8.405
FILL,737,740,2,738,1
N,741,5.4665,-9.374
N,743,5.4665,-10.5
FILL,741,743
N,748,5.89,-1.0
NGEN,2,20,730,743,1,0.4235
FILL,748,750
N,766,7.265,0
NGEN,2,20,748,763,1,1.375
FILL,766,768
N,786,7.571,0.00
N,787,7.571,-0.50
N,788,7.571,-1
N,789,7.571,-1.55
N,790,7.571,-2.10
N,791,7.571,-2.60
N,792,7.571,-3.10
N,793,7.571,-3.60
N,794,7.571,-4.10
N,795,7.571,-4.90
N,796,7.571,-5.55
N,797,7.571,-6.75

N,806,PLUGR4,0.00
N,550,PLUGR4,-0.13
N,807,PLUGR4,-0.63
N,808,PLUGR4,-1.13
```

```
N,809,PLUGR4,-1.69
N,810,PLUGR4,-2.26
N,811,PLUGR4,-2.64
N,812,PLUGR4,-3.28
N,813,PLUGR4,-3.89
N,814,PLUGR4,-4.58
N,815,PLUGR4,-5.26
N,816,PLUGR4,-5.95
N,817,PLUGR4,-6.75

/COM **** UNDER LOCKING RING ****
N,824,8.5017,-6.75
N,827,8.5017,-8.405
FILL
N,828,8.5017,-9.374
N,830,8.5017,-10.5
FILL
NGEN,2,20,778,783,1,0.306
NGEN,2,20,798,803,1,0.3065
NGEN,3,7,824,830,1,0.5616
NGEN,2,7,838,844,1,0.5001
NGEN,2,7,845,851,1,0.750      ! Under Bolt
N,859,11.625,-6.75
N,860,11.625,-7.302
N,861,11.625,-7.854
N,862,PLUGR2,-8.405
N,1100,PLUGR2,-8.83
N,863,PLUGR2,-9.374
N,865,PLUGR3,-10.5
FILL,863,865
N,866,PLUGR1-0.27,-6.75       ! Seal Tab
N,869,PLUGR1-0.27,-8.405
FILL,866,869,2,867,1
N,870,PLUGR1-0.27,-8.56
NGEN,2,5,866,870,1,0.27
SAVE


/COM **** COUPLING NODES ****
/COM **** BETWEEN LIFTING/LOCKING RING & SHELL ****
/COM **** BETWEEN BOLT & LOCKING RING ****

CP,54,UY,445,910       ! Inner Nodes
CP,55,UX,445,910
CP,56,UY,447,911       ! Outer Nodes
CP,57,UX,447,911
!
*DO,I,1,7              ! Going Down The Bolt
CP,57+I,UY,445+10*I,910+2*I
*ENDDO
!
*DO,I,1,7
CP,64+I,UY,447+10*I,911+2*I
*ENDDO
!
*DO,I,1,7
```

```
CP,71+I,UX,445+10*I,910+2*I
*ENDDO
!
*DO,I,1,7
CP,78+I,UX,447+10*I,911+2*I
*ENDDO
!
CP,100,UY,479,289               ! Threads
CP,101,UY,478,286
CP,102,UY,488,283
CP,103,UY,498,280
CP,104,UY,508,277
SAVE


/COM ************* ELEMENT GENERATION *************
/COM ************* SHELL *************

TYPE,1                 ! Plane42 -
MAT,1                           ! Type 304L/304 Properties  Stainless Steel

E,1,2,22,21            ! Bottom Plate
EGEN,10,1,-1
E,11,32,31
E,21,22,42,41
EGEN,11,1,-1

E,50,51,1102,1101                        ! Bottom Shell
EGEN,5,3,-1
E,1101,1102,54,53
EGEN,5,3,-1
E,51,52,1103,1102
EGEN,5,3,-1
E,1102,1103,55,54
EGEN,5,3,-1
E,65,66,100,
E,66,101,100
E,66,67,101
E,100,101,1117,1116
E,1116,1117,1119,1118
EGEN,8,4,-1
E,1118,1119,103,102
E,102,103,1121,1120
E,1122,1123,105,104
E,104,105,1125,1124
E,1126,1127,107,106
E,106,107,1129,1128
E,1130,1131,109,108
E,108,109,1133,1132
E,1134,1135,111,110
E,110,111,1137,1136
E,1138,1139,113,112
E,112,113,1141,1140
E,1142,1143,115,114
E,114,115,1145,1144
E,1146,1147,117,116
```

```
E,116,117,119,118
EGEN,32,2,-1
E,180,181,191
E,190,180,191
E,181,192,191
E,190,191,194,193
EGEN,9,3,-1
E,191,192,195,194
EGEN,9,3,-1

TYPE,1                        ! Collar
MAT,1                                ! 304L

E,217,218,221,220
EGEN,9,3,-1
E,218,219,222,221
EGEN,9,3,-1
E,244,245,986,985
E,985,986,981,980
E,980,981,248,247
EGEN,2,1,-3
E,237,991,251,250
E,991,990,251
E,250,251,254,253
E,251,990,255,254
E,253,254,257,246
E,254,255,258,257
E,246,257,988,987
E,257,258,989,988
E,987,988,983,982
E,988,989,984,983
E,982,983,260,259
E,983,984,261,260
E,259,260,263,262
EGEN,9,3,-1
E,271,274,1000
E,260,261,264,263
EGEN,12,3,-1
E,286,300,289
E,286,287,290,300
E,300,290,293,292
E,292,293,296,295


/COM ************* LOCKING RING *************

TYPE,3
MAT,4                                                 ! F304N

E,411,412,402,401                               ! Top Going Down and
EGEN,11,10,-1                                         ! Left to Right
EGEN,3,1,-11
E,414,415,405,404
EGEN,2,10,-1
E,415,902,900,405
E,425,904,902,415
```

```
E,902,903,901,900
EGEN,2,2,-1
E,903,416,406,901
E,905,426,416,903
E,454,912,910,444
E,464,914,912,454
E,474,916,914,464
E,484,918,916,474
E,494,920,918,484
E,504,922,920,494
E,514,924,922,504
E,913,458,448,911
E,915,468,458,913
E,917,478,468,915
E,919,488,478,917
E,921,498,488,919
E,923,508,498,921
E,925,518,508,923
SAVE

/COM ************* NITRONIC 60 BOLTS (MODELED AS RING) *************

TYPE,2
MAT,2                                              ! SA-193

E,455,456,446,445
EGEN,8,10,-1
E,456,457,447,446
EGEN,8,10,-1
SAVE

/COM ************* SHIELD PLUG *************

TYPE,4
MAT,1                                              ! 304L

E,602,622,621,601
EGEN,12,1,-1
EGEN,2,20,-12
E,643,663,662,642
EGEN,11,1,-1
EGEN,2,20,-11
E,684,704,703,683
EGEN,10,1,-1
E,707,717,716,706
EGEN,7,1,-1
E,717,737,736,716
EGEN,7,1,-1
E,731,751,750,730
EGEN,13,1,-1
EGEN,4,20,-13
E,749,769,768,748
EGEN,2,1,-1
EGEN,3,20,-2
E,767,787,786,766
EGEN,2,1,-1
```

```
EGEN,2,20,-1
E,787,807,550,786
E,550,806,786
E,818,825,824,817
EGEN,6,1,-1
EGEN,5,7,-6
E,853,860,859,852
EGEN,3,1,-1
EGEN,2,7,-3
E,867,872,871,866
EGEN,4,1,-1
E,1100,862,855
E,856,1100,855
E,856,863,1100
E,857,864,863,856
EGEN,2,1,-1
SAVE


/COM ************* CONTACT ELEMENTS *************

/COM **** BETWEEN SHIELD PLUG & SHELL ****
TYPE,5
REAL,4
E,871,271
E,872,268
E,873,265
E,874,262
E,1100,980


/COM **** BETWEEN SHIELD PLUG & SEAL LIP ****
TYPE,5
REAL,6
E,248,870
E,249,875



TYPE,5
REAL,8
E,247,862
E,248,869


/COM **** UNDER THE BOLT ****
TYPE,5
REAL,5
E,845,525
E,852,526
E,859,527

/COM **** BETWEEN LOCKING RING & PLUG ****
TYPE,5
REAL,4
E,550,401
```

```
E,807,411
E,808,421
E,809,431
E,810,441
E,811,451
E,812,461
E,813,471
E,814,481
E,815,491
E,816,501


/COM ************* MERGING COINCIDENT NODES *************
ESEL,S,TYPE,,1
NSLE
NUMMRG,NODE
EALL
NALL


/COM************* BOUNDARY CONDITIONS AT AXIS (X=0) ************
CSYS,0
NSEL,S,LOC,X,0
D,ALL,UX,0
NALL
EALL
NSEL,S,NODE,,10
D,ALL,UY,0
NALL
EALL
SAVE
FINISH

!****************************************************************
/COM***************        SOLUTION PHASE        *************
/SOLUTION

/COM **** LOAD 1: 150 PSI INTERNAL PRESSURE ****
NSEL,S,NODE,,41      ! Bottom Plate
NSEL,A,NODE,,42
NSEL,A,NODE,,43
NSEL,A,NODE,,44
NSEL,A,NODE,,45
NSEL,A,NODE,,46
NSEL,A,NODE,,47
NSEL,A,NODE,,48
NSEL,A,NODE,,49
NSEL,A,NODE,,50            ! Junction at Shell
NSEL,A,NODE,,1101          ! Bottom Shell
NSEL,A,NODE,,53
NSEL,A,NODE,,1104
NSEL,A,NODE,,56
NSEL,A,NODE,,1107
NSEL,A,NODE,,59
```

```
NSEL,A,NODE,,1110
NSEL,A,NODE,,62
NSEL,A,NODE,,1113
NSEL,A,NODE,,65
NSEL,A,NODE,,100
NSEL,A,NODE,,1116
NSEL,A,NODE,,1118
NSEL,A,NODE,,102
NSEL,A,NODE,,1120
NSEL,A,NODE,,1122
NSEL,A,NODE,,104
NSEL,A,NODE,,1124
NSEL,A,NODE,,1126
NSEL,A,NODE,,106
NSEL,A,NODE,,1128
NSEL,A,NODE,,1130
NSEL,A,NODE,,108
NSEL,A,NODE,,1132
NSEL,A,NODE,,1134
NSEL,A,NODE,,110
NSEL,A,NODE,,1136
NSEL,A,NODE,,1138
NSEL,A,NODE,,112
NSEL,A,NODE,,1140
NSEL,A,NODE,,1142
NSEL,A,NODE,,114
NSEL,A,NODE,,116
NSEL,A,NODE,,1144
NSEL,A,NODE,,1146
NSEL,A,NODE,,118
NSEL,A,NODE,,120
NSEL,A,NODE,,122
NSEL,A,NODE,,124
NSEL,A,NODE,,126
NSEL,A,NODE,,128
NSEL,A,NODE,,130
NSEL,A,NODE,,132
NSEL,A,NODE,,134
NSEL,A,NODE,,136
NSEL,A,NODE,,138
NSEL,A,NODE,,140
NSEL,A,NODE,,142
NSEL,A,NODE,,144
NSEL,A,NODE,,146
NSEL,A,NODE,,148
NSEL,A,NODE,,150
NSEL,A,NODE,,152
NSEL,A,NODE,,154
NSEL,A,NODE,,156
NSEL,A,NODE,,158
NSEL,A,NODE,,160
NSEL,A,NODE,,162
NSEL,A,NODE,,164
NSEL,A,NODE,,166
NSEL,A,NODE,,168
NSEL,A,NODE,,170
```

```
NSEL,A,NODE,,172
NSEL,A,NODE,,174
NSEL,A,NODE,,176
NSEL,A,NODE,,178
NSEL,A,NODE,,180
NSEL,A,NODE,,182
NSEL,A,NODE,,184
NSEL,A,NODE,,186
NSEL,A,NODE,,188
NSEL,A,NODE,,190
NSEL,A,NODE,,193
NSEL,A,NODE,,196
NSEL,A,NODE,,199
NSEL,A,NODE,,202
NSEL,A,NODE,,205
NSEL,A,NODE,,208
NSEL,A,NODE,,211
NSEL,A,NODE,,214
NSEL,A,NODE,,217
NSEL,A,NODE,,220
NSEL,A,NODE,,223
NSEL,A,NODE,,226
NSEL,A,NODE,,229
NSEL,A,NODE,,232
NSEL,A,NODE,,235
NSEL,A,NODE,,238
NSEL,A,NODE,,241
NSEL,A,NODE,,244
NSEL,A,NODE,,985
NSEL,A,NODE,,980
NSEL,A,NODE,,247          ! Shell at Sealing Surface
NSEL,A,NODE,,248
NSEL,A,NODE,,870          ! Seal Stop (Plug)
NSEL,A,NODE,,869
NSEL,A,NODE,,862
NSEL,A,NODE,,1100
NSEL,A,NODE,,863          ! Plug Taper
NSEL,A,NODE,,864
NSEL,A,NODE,,865          ! Start Plug Bottom
NSEL,A,NODE,,858
NSEL,A,NODE,,851
NSEL,A,NODE,,844
NSEL,A,NODE,,837
NSEL,A,NODE,,830
NSEL,A,NODE,,823
NSEL,A,NODE,,803
NSEL,A,NODE,,783
NSEL,A,NODE,,763
NSEL,A,NODE,,743
NSEL,A,NODE,,723
NSEL,A,NODE,,713
NSEL,A,NODE,,693
NSEL,A,NODE,,673
NSEL,A,NODE,,653
NSEL,A,NODE,,633
NSEL,A,NODE,,613
```

```
SF,ALL,PRES,189
NALL
EALL
LSWRITE,1
SAVE

/COM **** LOAD 2: LIFTING LOAD ****
NSEL,ALL
NSEL,S,NODE,,904
NSEL,A,NODE,,905
NSEL,A,NODE,,425
NSEL,A,NODE,,426
SF,ALL,PRES,587.25          ! 24000#/40.87 IN^2 (SHOE WIDTH SMEARED AROUND
NALL                    ! CIRCUMFERENCE OF LIFTING EAR)
EALL
LSWRITE,2
LSSOLVE,1,2
SAVE
FINISH

/COM **** POSTPROCESSING ****
/POST1
SET,LAST
/TYPE,ALL,HIDC
/GLINE,ALL,0
RSYS,0
PLNSOL,S,INT
/DSCALE,,20
/REPLOT
LPATH,1,41                 ! Bottom Plate
PRSECT
LPATH,6,46
PRSECT
LPATH,10,50
PRSECT
LPATH,50,52                ! Lower Shell
PRSECT
LPATH,50,55
PRSECT
LPATH,62,64
PRSECT
LPATH,65,67
PRSECT
LPATH,100,101              ! Mid Shell
PRSECT
LPATH,122,123
PRSECT
LPATH,134,135
PRSECT
LPATH,156,157
PRSECT
LPATH,170,171
PRSECT
LPATH,180,181
PRSECT
LPATH,202,204              ! Upper Shell
```

```
PRSECT
LPATH,235,237
PRSECT
LPATH,985,989
PRSECT
LPATH,262,264
PRSECT
LPATH,277,279
PRSECT
LPATH,292,294
PRSECT
LPATH,601,641           ! Shield Plug
PRSECT
LPATH,601,613
PRSECT
LPATH,603,703
PRSECT
LPATH,606,706
PRSECT
LPATH,766,806
PRSECT
LPATH,748,808
PRSECT
LPATH,730,810
PRSECT
LPATH,736,815
PRSECT
LPATH,869,874
PRSECT
LPATH,870,875
PRSECT
LPATH,431,434           ! Locking Ring
PRSECT
LPATH,406,426
PRSECT
LPATH,404,424
PRSECT
SAVE
```

COMPUTER RUN COVER SHEET

Project Number:	KH-8009-8
Computer Code:	ANSYS®-PC
Software Version:	5.4
Computer System:	Windows 95®, Pentium® Processor
Computer Run File Number:	KH-8009-8-09
Unique Computer Run Filename:	POC4.otf
Run Description:	Load Case 4 Output
Run Date / Time:	16 November 1998 10:51:53 PM

Michael E. Cohen 2/4/99

Prepared By: Michael E. Cohen Date

2/4/99

Checked By: Zachary G. Sargent Date

REVISION	0	1	2		**PAGE 106** **OF 129**
PREPARED BY / DATE	ZGS 4/17/97	ZGS 7/14/98	MEC 02/04/99		
CHECKED BY / DATE	JN 4/17/97	HSA 7/14/98	ZGS 02/04/99		

PARSONS

CLIENT: DE&S HANFORD, INC. **FILE NO:** KH-8009-8-09

PROJECT: MCO Final Design DOC. NO.: HNF-SD-SNF-DR-003, Rev. 2, Appendix 11

COMPUTER RUN COVER SHEET

Project Number:	KH-8009-8
Computer Code:	ANSYS®-PC
Software Version:	5.4
Computer System:	Windows 95®, Pentium® Processor
Computer Run File Number:	KH-8009-8-09
Unique Computer Run Filename:	TG275.inp
Run Description:	Load Case 5: Differential Temperature
Creation Date / Time:	11 November 1998 1:11:29 PM

Michael E Cohen 2/4/99

Prepared By: Michael E. Cohen Date

2/4/99

Checked By: Zachary G. Sargent Date

REVISION	0	1	2		PAGE 107 OF 129
PREPARED BY / DATE	ZGS 4/17/97	ZGS 7/14/98	MC 02/04/99		
CHECKED BY / DATE	JN 4/17/97	HSA 7/14/98	ZGS 02/04/99		

LISTING OF TG275.INP FILE

```
/BATCH,LIST
/FILENAM,TG275
/PREP7
/TITLE,MCO DESIGN- 100 C TEMPERATURE DIFFERENTIAL, 189 PSI

TREF,70                 ! Reference Temperature of 70 F
!ETAN=0.006               ! Tangent modulus

/COM ************* ELEMENT TYPES *************
ET,1,55,,,1                        ! Shell & Collar
ET,2,55,,,1                      ! Bolts
ET,3,55,,,1                        ! Locking Ring
ET,4,55,,,1                        ! Shield Plug & Guard Plate
ET,5,32                            ! Gap Elements

/COM ************* REAL CONSTANTS FOR GAP ELEMENTS *************
R,4,1                                ! Shell/Shield Plug
R,5,0,1.0e8,2.75e-03       ! L. Ring/Shield Plug, Under Bolt, Preloaded
R,6,0,1.0e8,0,2.0          ! Sealing Surface, closed


/COM ************* MATERIAL PROPERTIES *************

/COM **** MATERIAL 1,  304L STAINLESS STEEL ****
MP,DENS,1,493/1728          ! 304L SS
MP,NUXY,1,0.3

/COM **** DEFINING TEMPERATURES FOR MPDATA ****
MPTEMP,1, 70,100,200,300,400,500
MPTEMP,7,600,650,700,750

/COM **** DEFINING ELASTIC MODULI FOR 304L ****
MPDATA,EX,1,1,28.3e+06,28.1e+06,27.6e+06,27.0e+06,26.5e+06,25.8e+06
MPDATA,EX,1,7,25.3e+06,25.1e+06,24.8e+06,24.5e+06

/COM **** MEAN COEFFICIENTS OF THERMAL EXPANSION (in./in./(F) ****
! SA240 Gr 304L
MPDATA,ALPX,1,1,0,8.55e-06,8.79e-06,9.00e-06,9.19e-06,9.37e-06
MPDATA,ALPX,1,7,9.53e-06,9.61e-06,9.69e-06,9.76e-06

/COM **** THERMAL CONDUCTIVITY COEFFICIENTS (Btu/Hr-in.-(F) 304****
MPDATA,KXX,1,1,0.716,0.725,0.775,0.817

/COM **** MATERIAL 2, SA-193 GRADE B8S ****
MP,DENS,2,473/1728
MP,NUXY,2,0.3

/COM **** DEFINING TEMPERATURES FOR MPDATA ****
MPTEMP,1, 70,100,200,300,400,500
MPTEMP,7,600,650,700,750

/COM                    ! SA-193
MPDATA,EX,2,1,28.3e+06,28.1e+06,27.6e+06,27.0e+06,26.5e+06,25.8e+06
```

```
MPDATA,EX,2,7,25.3e+06,25.1e+06,24.8e+06,24.5e+06

! SA193 Gr B8M
MPDATA,ALPX,2,1,0,8.54e-06,8.76e-06,8.97e-06,9.21e-06,9.42e-06
MPDATA,ALPX,2,7,9.60e-06,9.69e-06,9.76e-06,9.81e-06

/COM ** THERMAL CONDUCTIVITY COEFFICIENTS (Btu/Hr-in.-(F) SA-193 **
MPDATA,KXX,2,1,0.716,0.725,0.775,0.817

/COM **** MATERIAL 4 , F304N ****
MP,DENS,4,493/1728          ! 304L SS
MP,NUXY,4,0.3

/COM **** DEFINING TEMPERATURES FOR MPDATA ****
MPTEMP,1, 70,100,200,300,400,500
MPTEMP,7,600,650,700,750

/COM **** DEFINING ELASTIC MODULI FOR 304L ****
MPDATA,EX,4,1,28.3e+06,28.1e+06,27.6e+06,27.0e+06,26.5e+06,25.8e+06
MPDATA,EX,4,7,25.3e+06,25.1e+06,24.8e+06,24.5e+06

/COM **** MEAN COEFFICIENTS OF THERMAL EXPANSION (in./in./(F) ****
MPDATA,ALPX,4,1,0,8.55e-06,8.79e-06,9.00e-06,9.19e-06,9.37e-06
MPDATA,ALPX,4,7,9.53e-06,9.61e-06,9.69e-06,9.76e-06

/COM **** THERMAL CONDUCTIVITY COEFFICIENTS (Btu/Hr-in.-(F) 304N****
MPDATA,KXX,4,1,0.716,0.725,0.775,0.817

/COM **** MATERIAL 5,  304L STAINLESS STEEL ****
MP,DENS,4,493/1728          ! 304L SS
MP,NUXY,4,0.3

/COM **** DEFINING TEMPERATURES FOR MPDATA ****
MPTEMP,1, 70,100,200,300,400,500
MPTEMP,7,600,650,700,750

/COM **** DEFINING ELASTIC MODULI FOR 304L ****
MPDATA,EX,5,1,28.3e+06,28.1e+06,27.6e+06,27.0e+06,26.5e+06,25.8e+06
MPDATA,EX,5,7,25.3e+06,25.1e+06,24.8e+06,24.5e+06

/COM **** MEAN COEFFICIENTS OF THERMAL EXPANSION (in./in./(F) ****
! SA240 Gr 304L
MPDATA,ALPX,5,1,0,8.55e-06,8.79e-06,9.00e-06,9.19e-06,9.37e-06
MPDATA,ALPX,5,7,9.53e-06,9.61e-06,9.69e-06,9.76e-06

/COM **** THERMAL CONDUCTIVITY COEFFICIENTS (Btu/Hr-in.-(F) 304L****
MPDATA,KXX,5,1,0.716,0.725,0.775,0.817

/COM ************* SHELL GEOMETRY ****************
IR=11.49             ! Internal Shell Radius @ Bottom
OR=12.000              ! Shell Outside Radius @ Bottom
IR2 = 12.02           ! Inside Radius at Collar Sealing Surface
OR2 = 12.655            ! Outside Radius at Collar Sealing Surface
IR3 = 12.284           ! Inside Radius at Collar-Lifting Ring Weld
IR4=12.174           ! Inside Radius
```

```
/COM **** BOTTOM  PLATE  [DWG SK-2-300378] ****
N,1,,-1.32                    ! Row 1
N,2,1.25,-1.32
N,3,2.13,-1.32
N,10,11.423,-1.32
FILL

N,41,0.00,-0.19                 ! Row 3
N,42,1.25,-0.19
N,43,2.13,0.69
N,50,IR,0.69
FILL,43,50
N,52,OR,0.69
FILL,50,52

FILL,1,41,1,21,1,10           ! Middle Row
FILL,10,50,1,30
N,32,12,-0.32
FILL,30,32
FILL,10,32,1,11
N,53,IR,1.17
N,55,OR,1.17                 ! Shell Stub/Weld
FILL,53,55
FILL,50,53,1,1101
FILL,51,54,1,1102
FILL,52,55,1,1103

/COM **** SHELL [DWGS SK-2-300379 & SK-2-300461] ****
N,65,IR,6.68
N,67,OR,6.68
FILL
FILL,53,65,3,,3,3,1
FILL,53,56,1,1104
FILL,55,58,1,1106
FILL,1104,1106
FILL,56,59,1,1107
FILL,58,61,1,1109
FILL,1107,1109
FILL,59,62,1,1110
FILL,61,64,1,1112
FILL,1110,1112
FILL,62,65,1,1113
FILL,64,67,1,1115
FILL,1113,1115

/COM **** SINGLE ROW SHELL ****
N,100,IR,7.18               ! Inside
N,140,IR,71.68
N,180,IR,136.68
N,101,OR,7.18                ! Outside
N,141,OR,71.68
N,181,OR,136.68
FILL,100,140,20,,2,2,1,2.0
FILL,140,180,19,,2,2,1,.5
FILL,100,102,2,1116,2
FILL,102,104,2,1120,2
```

```
FILL,104,106,2,1124,2
FILL,106,108,2,1128,2
FILL,108,110,2,1132,2
FILL,110,112,2,1136,2
FILL,112,114,2,1140,2
FILL,114,116,2,1144,2
NGEN,2,1,1116,1146,2,0.50

/COM **** DOUBLE ROW SHELL ****
N,190,IR,137.18            ! Transition to Double Row
N,192,OR,137.18
FILL

/COM **** BASE OF CASK THROAT--ELEVATION: 138 INCHES ****
N,217,IR,142.68            ! Transition to Double Row
N,219,OR,142.68
FILL
FILL,190,217,8,,3,3,1      ! Vertical Fill

/COM **** BOTTOM OF COLLAR TRANSITION ****
N,235,IR,146.06            ! Start of Transition to Large O.D &
N,237,OR,146.06             ! Assumed Location of Shield Plug Taper
FILL
N,238,IR,146.68
N,240,OR,146.68
FILL                ! Horizontal Fill
FILL,217,235,5,,3,3,1      ! Vertical Fill

/COM **** TOP OF COLLAR TRANSITION ****
N,241,IR,147.31            ! End of Transition to Large O.D &
N,243,OR,147.31             ! Assumed Location of Shield Plug Taper
FILL                ! Horizontal Fill
NGEN,2,3,241,243,1,,0.75

/COM **** COLLAR SEALING SURFACE ****
N,247,IR,149.63            ! Inside Radius of Sealing Surface
N,249,IR2,149.63            ! Outside Radius at Sealing Surface
FILL                ! Horizontal Fill

/COM **** THICK WALL AT COLLAR TRANSITION ****
NGEN,2,10,240,249,3          ! Nodes 250-259 Coincident w/240-249 (by 3)
N,255,OR2,147.31           ! Outside Surface
N,261,OR2,149.63           ! Outside Surface
N,258,OR2,148.06
N,980,IR,149.38
N,981,11.755,149.38
N,982,IR2,149.38
N,983,12.317,149.38
N,984,OR2,149.38
N,990,OR2,146.68
FILL,240,990,1,251
NGEN,2,5,980,984,1,,-0.66
FILL,246,258,1,257
FILL,253,255,1,,1,3,3
FILL,237,990,1,991
```

```
/COM **** COLLAR AT BOTTOM EDGE OF PLUG (.155" above Sealing Surface) ****
NGEN,2,3,259,,,,0.175          ! Nodes 262

/COM **** COLLAR AT TOP EDGE OF PLUG (1.44" above bottom Edge) ****
NGEN,2,9,262,,,,1.655          ! Nodes 271
FILL,262,271,2
NGEN,3,1,259,271,1,(OR2-IR2)/2

/COM **** COLLAR AT BASE OF THREADS ****
N,274,IR4,151.58
N,1000,IR2,151.58

/COM **** TOP TO COLLAR (WELD CLOSURE) ****
N,277,IR4,152.26
N,280,IR4,152.95
N,283,IR4,153.63
N,286,IR4,154.32
N,289,IR4,154.725
N,290,12.47,154.725
N,291,OR2,154.725
N,292,IR3,155.30
N,295,IR3,155.875
N,300,IR3,154.725
NGEN,2,1,274,289,3,0.27
NGEN,2,1,275,290,3,0.211
NGEN,3,1,292,295,1,(OR2-IR3)/2

/COM ************* LOCKING & LIFTING RING GEOMETRY *************
RING1=7.88            ! Inner Radius
RING2=9.375                  ! Inside Lip
RING3=9.625                  ! Inside Lip, Bottom of Transition
RING4=10.19                  ! Outside Lip
RING5=12.065                 ! Outside Radius No Threads
RING6=12.174                 ! Outside Radius
LOCAL,15,0,,151.58            ! Local System z=0 at Base of Lifting Ring

/COM **** TOP EDGE ****
N,401,RING1,6.50
CSYS,0
N,404,RING2,158.08
FILL,401,404,,,1
N,405,9.53,158.08
N,900,9.75,158.08
N,901,9.97,158.08
N,406,RING4,158.08


/COM **** LIFTING SURFACE ****
CSYS,15
N,421,RING1,5.50
N,424,RING2,5.50
FILL,421,424
N,425,9.53,5.50
N,904,9.75,5.50
N,905,9.97,5.50
N,426,RING4,5.50
```

```
FILL,401,421,1,,10,6,1
FILL,900,904,1,902
FILL,901,905,1,903
N,431,RING1,6.50-1.56
N,434,RING2,6.50-1.56
FILL

/COM **** BOLTING SURFACE ****
N,441,RING1,4.37
N,444,RING3,4.37
FILL
NGEN,2,10,441,444,,,-0.38
NGEN,2,10,451,454,,,-0.64
NGEN,2,10,461,464,,,-0.61
NGEN,2,10,471,474,,,-0.69
NGEN,2,10,481,484,,,-0.68
NGEN,2,10,491,494,,,-0.69
NGEN,2,10,501,504,,,-0.68
N,445,10.875-0.75,4.37          ! Inside Edge of Bolt Hole
N,447,10.875+0.75,4.37           ! Outside Edge of Bolt Hole
FILL
N,910,10.875-0.75,4.37             ! Double Nodes @ Bolt for Gap elements
N,911,10.875+0.75,4.37
N,912,10.875-0.75,3.99
N,913,10.875+0.75,3.99
N,455,10.875-0.75,3.99
N,457,10.875+0.75,3.99
FILL,455,457
N,914,10.875-0.75,3.35
N,915,10.875+0.75,3.35
N,465,10.875-0.75,3.35
N,467,10.875+0.75,3.35
FILL,465,467
N,916,10.875-0.75,2.74
N,917,10.875+0.75,2.74
N,475,10.875-0.75,2.74
N,477,10.875+0.75,2.74
FILL,475,477
N,918,10.875-0.75,2.05
N,919,10.875+0.75,2.05
N,485,10.875-0.75,2.05
N,487,10.875+0.75,2.05
FILL,485,487
N,920,10.875-0.75,1.37
N,921,10.875+0.75,1.37
N,495,10.875-0.75,1.37
N,497,10.875+0.75,1.37
FILL,495,497
N,922,10.875-0.75,0.68
N,923,10.875+0.75,0.68
N,505,10.875-0.75,0.68
N,507,10.875+0.75,0.68
FILL,505,507
N,924,10.875-0.75,0.00
N,925,10.875+0.75,0.00
N,515,10.875-0.75,0.00
```

```
N,517,10.875+0.75,0.00
FILL,515,517
N,525,10.125,-0.119          ! Bottom of Bolt Extension
N,527,11.625,-0.119
FILL,525,527

/COM ****CHAMFER  AND THREADS****
N,448,RING5-.22,4.37           ! O.D of Ring at Chamfer
N,458,RING5,3.99
N,469,RING5,3.35
N,468,RING6,3.35             ! Top of Threads
N,479,RING6,3.145
N,478,RING6,2.74
N,488,RING6,2.05
N,498,RING6,1.37
N,508,RING6,0.68
N,518,RING6,0.00             ! Bottom of Threads


/COM ************* SHIELD PLUG *************
PLUGR1=11.975
PLUGR2=11.45
PLUGR3=11.25
PLUGR4=7.8775
LOCAL,20,0,,158.21            ! Local System z=0 at Top Left of Shield Plug

/COM **** NODES AT PLUG AXIS (r=0) ****
N,601
N,602,0,-1
N,603,0,-1.994
N,606,0,-4.994
FILL,603,606,2,604,1
N,607,0,-6.75
N,610,0,-8.405
FILL,607,610,2,608,1
N,611,0,-9.374
N,613,0,-10.5
FILL,611,613

/COM **** NODAL GENERATION ****
NGEN,2,20,601,613,1,0.8825
NGEN,2,20,621,633,1,0.8825          ! Id Large Opening
NGEN,2,20,642,653,1,0.6875
NGEN,2,20,662,673,1,0.6875         ! Id Medium Opening
NGEN,2,20,683,693,1,0.4235         ! Id Small Opening
NGEN,2,10,706,713,1,0.9515         ! Center of Opening

N,730,5.4665,-1.994            ! Od Small Opening
N,736,5.4665,-4.994
FILL,730,736,5,731,1
N,737,5.4665,-6.75
N,740,5.4665,-8.405
FILL,737,740,2,738,1
N,741,5.4665,-9.374
N,743,5.4665,-10.5
FILL,741,743
```

```
N,748,5.89,-1.0
NGEN,2,20,730,743,1,0.4235
FILL,748,750
N,766,7.265,0
NGEN,2,20,748,763,1,1.375
FILL,766,768
N,786,7.571,0.00
N,787,7.571,-0.50
N,788,7.571,-1
N,789,7.571,-1.55
N,790,7.571,-2.10
N,791,7.571,-2.60
N,792,7.571,-3.10
N,793,7.571,-3.60
N,794,7.571,-4.10
N,795,7.571,-4.90
N,796,7.571,-5.55
N,797,7.571,-6.75

N,806,PLUGR4,0.00
N,550,PLUGR4,-0.13
N,807,PLUGR4,-0.63
N,808,PLUGR4,-1.13
N,809,PLUGR4,-1.69
N,810,PLUGR4,-2.26
N,811,PLUGR4,-2.64
N,812,PLUGR4,-3.28
N,813,PLUGR4,-3.89
N,814,PLUGR4,-4.58
N,815,PLUGR4,-5.26
N,816,PLUGR4,-5.95
N,817,PLUGR4,-6.75

/COM **** UNDER LOCKING RING ****
N,824,8.5017,-6.75
N,827,8.5017,-8.405
FILL
N,828,8.5017,-9.374
N,830,8.5017,-10.5
FILL
NGEN,2,20,778,783,1,0.306
NGEN,2,20,798,803,1,0.3065
NGEN,3,7,824,830,1,0.5616
NGEN,2,7,838,844,1,0.5001
NGEN,2,7,845,851,1,0.750       ! Under Bolt
N,859,11.625,-6.75
N,860,11.625,-7.302
N,861,11.625,-7.854
N,862,PLUGR2,-8.405
N,1100,PLUGR2,-8.83
N,863,PLUGR2,-9.374
N,865,PLUGR3,-10.5
FILL,863,865
N,866,PLUGR1-0.27,-6.75        ! Seal Tab
N,869,PLUGR1-0.27,-8.405
FILL,866,869,2,867,1
```

```
N,870,PLUGR1-0.27,-8.56
NGEN,2,5,866,870,1,0.27

/COM **** FILTER GUARD PLATE ****
LOCAL,40,0,,147.71           ! Local System z=0 at Bottom Left of Shield Plug
PLATE1=0.273
PLATE2=0.6575
PLATE3=1.357
PLATE4=10.25
PLATE5=11.25

N,1200,PLATE4,-0.85
N,1202,PLATE5,-0.85
FILL
NGEN,5,3,1200,1202,,,-0.85
NGEN,2,3,1212,1214,,,-0.25
N,1221,PLATE4,-5.75
N,1222,10.75,-5.75
N,1223,10.915,-5.75
FILL,1215,1221,1,1218
FILL,1223,1217,1,1220
FILL,1216,1222,1,1219
N,1237,6.4375,-4.25
FILL,1212,1237,3,1225,4
N,1249,3.578,-4.25
FILL,1237,1249,2,1241,4
NGEN,2,1,1225,1249,4,,-0.25
NGEN,2,2,1226,1250,4,,-1.25
FILL,1226,1228,1,1227,,7,4
N,1253,2.625,-2.375
N,1254,2.625,-2.575
N,1256,2.625,-4.25
FILL,1254,1256
N,1257,2.625,-4.5
N,1259,2.625,-5.75
FILL,1257,1259
NGEN,2,10,1253,1259,1,-0.5
NGEN,2,10,1263,1269,1,-0.768
N,1283,0.6575,-2.375
N,1284,0.6575,-2.575
N,1260,2.125
N,1270,1.357
N,1280,0.6575
N,1290,0.273
NGEN,3,1,1260,1290,10,,-0.5625


/COM **** COUPLING NODES ****
/COM **** BETWEEN LIFTING/LOCKING RING & SHELL ****
/COM **** BETWEEN BOLT & LOCKING RING ****

CP,54,TEMP,445,910  ! Inner Nodes
CP,56,TEMP,447,911  ! Outer Nodes
!
*DO,I,1,7           ! Going Down The Bolt
```

```
CP,57+I,TEMP,445+10*I,910+2*I
*ENDDO
!
*DO,I,1,7
CP,64+I,TEMP,447+10*I,911+2*I
*ENDDO
!
CP,100,TEMP,479,289          ! Threads
CP,101,TEMP,478,286
CP,102,TEMP,488,283
CP,103,TEMP,498,280
CP,104,TEMP,508,277
SAVE

/COM ************* ELEMENT GENERATION *************
/COM ************* SHELL *************

TYPE,1               ! Plane42 -
MAT,1                        ! Type 304L/304 Properties  Stainless Steel

E,1,2,22,21          ! Bottom Plate
EGEN,10,1,-1
E,11,32,31
E,21,22,42,41
EGEN,11,1,-1

E,50,51,1102,1101                    ! Bottom Shell
EGEN,5,3,-1
E,1101,1102,54,53
EGEN,5,3,-1
E,51,52,1103,1102
EGEN,5,3,-1
E,1102,1103,55,54
EGEN,5,3,-1
E,65,66,100,
E,66,101,100
E,66,67,101
E,100,101,1117,1116
E,1116,1117,1119,1118
EGEN,8,4,-1
E,1118,1119,103,102
E,102,103,1121,1120
E,1122,1123,105,104
E,104,105,1125,1124
E,1126,1127,107,106
E,106,107,1129,1128
E,1130,1131,109,108
E,108,109,1133,1132
E,1134,1135,111,110
E,110,111,1137,1136
E,1138,1139,113,112
E,112,113,1141,1140
E,1142,1143,115,114
E,114,115,1145,1144
E,1146,1147,117,116
E,116,117,119,118
```

```
EGEN,32,2,-1
E,180,181,191
E,190,180,191
E,181,192,191
E,190,191,194,193
EGEN,9,3,-1
E,191,192,195,194
EGEN,9,3,-1

TYPE,1                          ! Collar
MAT,1                                   ! Type 304/304L

E,217,218,221,220
EGEN,9,3,-1
E,218,219,222,221
EGEN,9,3,-1
E,244,245,986,985
E,985,986,981,980
E,980,981,248,247
EGEN,2,1,-3
E,237,991,251,250
E,991,990,251
E,250,251,254,253
E,251,990,255,254
E,253,254,257,246
E,254,255,258,257
E,246,257,988,987
E,257,258,989,988
E,987,988,983,982
E,988,989,984,983
E,982,983,260,259
E,983,984,261,260
E,259,260,263,262
EGEN,9,3,-1
E,271,274,1000
E,260,261,264,263
EGEN,12,3,-1
E,286,300,289
E,286,287,290,300
E,300,290,293,292
E,292,293,296,295


/COM ************* LOCKING RING *************

TYPE,3
MAT,4                                                       ! F304N

E,411,412,402,401                                   ! Top Going Down and
EGEN,11,10,-1                                               ! Left to Right
EGEN,3,1,-11
E,414,415,405,404
EGEN,2,10,-1
E,415,902,900,405
E,425,904,902,415
E,902,903,901,900
```

```
EGEN,2,2,-1
E,903,416,406,901
E,905,426,416,903
E,454,912,910,444
E,464,914,912,454
E,474,916,914,464
E,484,918,916,474
E,494,920,918,484
E,504,922,920,494
E,514,924,922,504
E,913,458,448,911
E,915,468,458,913
E,917,478,468,915
E,919,488,478,917
E,921,498,488,919
E,923,508,498,921
E,925,518,508,923
SAVE

/COM ************* NITRONIC 60 BOLTS (MODELED AS RING) *************

TYPE,2
MAT,2                                           ! SA-193

E,455,456,446,445
EGEN,8,10,-1
E,456,457,447,446
EGEN,8,10,-1
SAVE

/COM ************* SHIELD PLUG *************

TYPE,4
MAT,1                                           ! 304L

E,602,622,621,601
EGEN,11,1,-1
EGEN,2,20,-11
E,613,1290,612
E,1290,1280,632,612
E,1280,633,632
E,633,1270,632
E,632,1270,652
E,1270,653,652

E,643,663,662,642
EGEN,10,1,-1
EGEN,2,20,-10
E,653,1260,652
E,1260,673,672,652
E,673,693,692,672
E,684,704,703,683
EGEN,10,1,-1
E,707,717,716,706
EGEN,7,1,-1
E,717,737,736,716
```

```
EGEN,7,1,-1
E,731,751,750,730
EGEN,13,1,-1
EGEN,4,20,-13
E,749,769,768,748
EGEN,2,1,-1
EGEN,3,20,-2
E,767,787,786,766
EGEN,2,1,-1
EGEN,2,20,-1
E,787,807,550,786
E,550,806,786
E,818,825,824,817
EGEN,6,1,-1
EGEN,5,7,-6
E,853,860,859,852
EGEN,3,1,-1
EGEN,2,7,-3
E,867,872,871,866
EGEN,4,1,-1
E,1100,862,855
E,856,1100,855
E,856,863,1100
E,857,864,863,856
EGEN,2,1,-1
SAVE

/COM ************* FILTER GUARD PLATE *************
TYPE,4
MAT,5

E,1200,1201,858,851
E,1201,1202,865,858
E,1203,1204,1201,1200
EGEN,2,1,-1
EGEN,6,3,-2
E,1221,1222,1219,1218
E,1222,1223,1220,1219
E,1226,1215,1212,1225
E,1227,1218,1215,1226
E,1228,1221,1218,1227
E,1230,1226,1225,1229
EGEN,3,1,-1
EGEN,6,4,-3
E,1257,1250,1249,1256
EGEN,3,1,-1
E,1264,1254,1253,1263
EGEN,6,1,-1
E,1271,1261,1260,1270
EGEN,9,1,-1
E,1281,1271,1270,1280
EGEN,4,1,-1
E,1291,1281,1280,1290
EGEN,2,1,-1
```

```
/COM ************* CONTACT ELEMENTS *************

/COM **** BETWEEN SHIELD PLUG & SHELL ****
TYPE,5
REAL,4
E,871,271
E,872,268
E,873,265
E,874,262
E,1100,980

/COM **** BETWEEN SHIELD PLUG & SEAL LIP ****
TYPE,5
REAL,4
E,247,862
E,248,870
E,249,875


/COM **** UNDER THE BOLT ****
TYPE,5
REAL,4
E,845,525
E,852,526
E,859,527

/COM **** BETWEEN LOCKING RING & PLUG ****
TYPE,5
REAL,4
E,550,401
E,807,411
E,808,421
E,809,431
E,810,441
E,811,451
E,812,461
E,813,471
E,814,481
E,815,491
E,816,501

/COM ************* MERGING COINCIDENT NODES *************
ESEL,S,TYPE,,1
NSLE
NUMMRG,NODE
EALL
NALL
FINI


!***************************************************************
/COM***************      SOLUTION PHASE       *************
/SOLUTION
```

```
ANTYPE,STATIC,NEW
OUTRES,ALL,LAST

/COM **** TEMPERATURE DIFFERENTIAL 32 C @ CENTER, 132 C OUTSIDE ****
!
NSEL,S,NODE,,601,613          ! Centerline, 32 C = 90 F
NSEL,A,NODE,,1,41,20
D,ALL,TEMP,90
NALL
EALL
NSEL,S,NODE,,10,11           ! Outside Shell from Bottom to Top
NSEL,A,NODE,,32,52,20
NSEL,A,NODE,,1103,1115,3
NSEL,A,NODE,,55,67,3
NSEL,A,NODE,,101,181,2
NSEL,A,NODE,,1117,1147,2
NSEL,A,NODE,,192,237,3
NSEL,A,NODE,,990,991
NSEL,A,NODE,,255,297,3
NSEL,A,NODE,,984,989,5
D,ALL,TEMP,270                     ! @ 132 C (270 F)
NALL
EALL
SOLVE
SAVE
FINI

/COM ************* STRUCTURAL ANALYSIS *************
/COM **** PREPROCESSOR ****
/PREP7

/COM ************* ELEMENT TYPES *************
ET,1,42,,,1                  ! Switches
ET,2,42,,,1                  !   Thermal Elements PLANE55
ET,3,42,,,1                  !         to
ET,4,42,,,1                  !   Structural Elements PLANE42
ET,5,12                      ! Switches LINK32 to CONTACT12
KEYOPT,5,7,1

/COM ************* REAL CONSTANTS FOR GAP ELEMENTS *************
R,4,-90,1.0e8,-0.045,3.0      ! Shell/Shield Plug, Initially Open 0.045"
R,5,0,1.0e8,2.95e-03        ! L. Ring/Shield Plug, Under Bolt, Preloaded
R,6,0,1.0e8,0,2.0         ! Sealing Surface, closed


/COM **** COUPLING NODES ****
/COM **** BETWEEN LIFTING/LOCKING RING & SHELL ****
/COM **** BETWEEN BOLT & LOCKING RING ****

CP,54,UY,445,910      ! Inner Nodes
CP,55,UX,445,910
CP,56,UY,447,911      ! Outer Nodes
CP,57,UX,447,911
!
*DO,I,1,7             ! Going Down The Bolt
CP,57+I,UY,445+10*I,910+2*I
```

```
*ENDDO
!
*DO,I,1,7
CP,64+I,UY,447+10*I,911+2*I
*ENDDO
!
*DO,I,1,7
CP,71+I,UX,445+10*I,910+2*I
*ENDDO
!
*DO,I,1,7
CP,78+I,UX,447+10*I,911+2*I
*ENDDO
!
CP,100,UY,479,289             ! Threads
CP,101,UY,478,286
CP,102,UY,488,283
CP,103,UY,498,280
CP,104,UY,508,277
SAVE

/COM ************* CONTACT ELEMENTS *************

/COM **** BETWEEN SHIELD PLUG & SHELL ****
TYPE,5
REAL,4
E,871,271
E,872,268
E,873,265
E,874,262
E,1100,980


/COM **** BETWEEN SHIELD PLUG & SEAL LIP ****
TYPE,5
REAL,6
E,247,862
E,248,870
E,249,875



/COM **** UNDER THE BOLT ****
TYPE,5
REAL,5
E,845,525
E,852,526
E,859,527

/COM **** BETWEEN LOCKING RING & PLUG ****
TYPE,5
REAL,4
E,550,401
E,807,411
E,808,421
E,809,431
```

```
E,810,441
E,811,451
E,812,461
E,813,471
E,814,481
E,815,491
E,816,501


/COM **** BOUNDARY CONDITIONS AT AXIS (X=0) ****
CSYS,0
NSEL,S,LOC,X,0
D,ALL,UX,0
ALLS
NSEL,S,NODE,,10
D,ALL,UY,0
ALLS
SAVE
FINI

/COM **** SOLUTION ****        ! Transfer Temperatures to Structural Model
/SOLU
LDREAD,TEMP,LAST,,,,TG275,RTH    ! Reads in Temperatures from TG275.RTH file.
NEQIT,50
NSUBST,50


/COM ****  189 PSI INTERNAL PRESSURE ****
NSEL,S,NODE,,41       ! Bottom Plate
NSEL,A,NODE,,42
NSEL,A,NODE,,43
NSEL,A,NODE,,44
NSEL,A,NODE,,45
NSEL,A,NODE,,46
NSEL,A,NODE,,47
NSEL,A,NODE,,48
NSEL,A,NODE,,49
NSEL,A,NODE,,50              ! Junction at Shell
NSEL,A,NODE,,1101            ! Bottom Shell
NSEL,A,NODE,,53
NSEL,A,NODE,,1104
NSEL,A,NODE,,56
NSEL,A,NODE,,1107
NSEL,A,NODE,,59
NSEL,A,NODE,,1110
NSEL,A,NODE,,62
NSEL,A,NODE,,1113
NSEL,A,NODE,,65
NSEL,A,NODE,,100
NSEL,A,NODE,,1116
NSEL,A,NODE,,1118
NSEL,A,NODE,,102
NSEL,A,NODE,,1120
NSEL,A,NODE,,1122
NSEL,A,NODE,,104
NSEL,A,NODE,,1124
```

```
NSEL,A,NODE,,1126
NSEL,A,NODE,,106
NSEL,A,NODE,,1128
NSEL,A,NODE,,1130
NSEL,A,NODE,,108
NSEL,A,NODE,,1132
NSEL,A,NODE,,1134
NSEL,A,NODE,,110
NSEL,A,NODE,,1136
NSEL,A,NODE,,1138
NSEL,A,NODE,,112
NSEL,A,NODE,,1140
NSEL,A,NODE,,1142
NSEL,A,NODE,,114
NSEL,A,NODE,,116
NSEL,A,NODE,,1144
NSEL,A,NODE,,1146
NSEL,A,NODE,,118
NSEL,A,NODE,,120
NSEL,A,NODE,,122
NSEL,A,NODE,,124
NSEL,A,NODE,,126
NSEL,A,NODE,,128
NSEL,A,NODE,,130
NSEL,A,NODE,,132
NSEL,A,NODE,,134
NSEL,A,NODE,,136
NSEL,A,NODE,,138
NSEL,A,NODE,,140
NSEL,A,NODE,,142
NSEL,A,NODE,,144
NSEL,A,NODE,,146
NSEL,A,NODE,,148
NSEL,A,NODE,,150
NSEL,A,NODE,,152
NSEL,A,NODE,,154
NSEL,A,NODE,,156
NSEL,A,NODE,,158
NSEL,A,NODE,,160
NSEL,A,NODE,,162
NSEL,A,NODE,,164
NSEL,A,NODE,,166
NSEL,A,NODE,,168
NSEL,A,NODE,,170
NSEL,A,NODE,,172
NSEL,A,NODE,,174
NSEL,A,NODE,,176
NSEL,A,NODE,,178
NSEL,A,NODE,,180
NSEL,A,NODE,,182
NSEL,A,NODE,,184
NSEL,A,NODE,,186
NSEL,A,NODE,,188
NSEL,A,NODE,,190
NSEL,A,NODE,,193
NSEL,A,NODE,,196
```

```
NSEL,A,NODE,,199
NSEL,A,NODE,,202
NSEL,A,NODE,,205
NSEL,A,NODE,,208
NSEL,A,NODE,,211
NSEL,A,NODE,,214
NSEL,A,NODE,,217
NSEL,A,NODE,,220
NSEL,A,NODE,,223
NSEL,A,NODE,,226
NSEL,A,NODE,,229
NSEL,A,NODE,,232
NSEL,A,NODE,,235
NSEL,A,NODE,,238
NSEL,A,NODE,,241
NSEL,A,NODE,,244
NSEL,A,NODE,,985
NSEL,A,NODE,,980
NSEL,A,NODE,,247          ! Shell at Sealing Surface
NSEL,A,NODE,,248
NSEL,A,NODE,,870          ! Seal Stop (Plug)
NSEL,A,NODE,,869
NSEL,A,NODE,,862
NSEL,A,NODE,,1100
NSEL,A,NODE,,863          ! Plug Taper
NSEL,A,NODE,,864
NSEL,A,NODE,,865          ! Start Plug Bottom
NSEL,A,NODE,,1202         ! Side of Guard Plate Ring
NSEL,A,NODE,,1205
NSEL,A,NODE,,1208
NSEL,A,NODE,,1211
NSEL,A,NODE,,1214
NSEL,A,NODE,,1217
NSEL,A,NODE,,1220
NSEL,A,NODE,,1223         ! Bottom of Guard Plate
NSEL,A,NODE,,1222
NSEL,A,NODE,,1221
NSEL,A,NODE,,1228
NSEL,A,NODE,,1232
NSEL,A,NODE,,1236
NSEL,A,NODE,,1240
NSEL,A,NODE,,1244
NSEL,A,NODE,,1248
NSEL,A,NODE,,1252
NSEL,A,NODE,,1259
NSEL,A,NODE,,1269
NSEL,A,NODE,,1279
SF,ALL,PRES,189
NALL
EALL
SOLVE
SAVE
FINI

/COM **** POSTPROCESSING ****
/POST1
```

```
PLNSOL,S,INT
/TYPE,ALL,HIDC
/GLINE,ALL,0
RSYS,0
/DSCALE,,10
/REPLOT
LPATH,1,41                    ! Bottom Plate
PRSECT
LPATH,6,46
PRSECT
LPATH,10,50
PRSECT
LPATH,50,52                   ! Lower Shell
PRSECT
LPATH,62,64
PRSECT
LPATH,65,67
PRSECT
LPATH,100,101                 ! Mid Shell
PRSECT
LPATH,122,123
PRSECT
LPATH,134,135
PRSECT
LPATH,156,157
PRSECT
LPATH,170,171
PRSECT
LPATH,180,181
PRSECT
LPATH,202,204                 ! Upper Shell
PRSECT
LPATH,235,237
PRSECT
LPATH,985,989
PRSECT
LPATH,262,264
PRSECT
LPATH,277,279
PRSECT
LPATH,292,294
PRSECT
LPATH,601,641                 ! Shield Plug
PRSECT
LPATH,601,613
PRSECT
LPATH,603,703
PRSECT
LPATH,606,706
PRSECT
LPATH,706,736
PRSECT
LPATH,766,806
PRSECT
LPATH,748,808
PRSECT
```

```
LPATH,730,810
PRSECT
LPATH,736,815
PRSECT
LPATH,869,874
PRSECT
LPATH,870,875
PRSECT
LPATH,431,434          ! Locking Ring
PRSECT
LPATH,406,426
PRSECT
LPATH,404,424
PRSECT
SAVE
FINI
```

PARSONS

CLIENT: DE&S HANFORD, INC. **FILE NO:** KH-8009-8-09

PROJECT: MCO Final Design DOC. NO.: HNF-SD-SNF-DR-003, Rev. 2, Appendix 11

COMPUTER RUN COVER SHEET

Project Number:	KH-8009-8
Computer Code:	ANSYS®-PC
Software Version:	5.4
Computer System:	Windows 95®, Pentium® Processor
Computer Run File Number:	KH-8009-8-09
Unique Computer Run Filename:	TG275.otf
Run Description:	Load Case 5 Output
Run Date / Time:	16 November 1998 10:58:29 PM

Michael E Cohen 2/9/99

Prepared By: Michael E. Cohen Date

2/4/99

Checked By: Zachary G. Sargent Date

REVISION	0	1	2		**PAGE 129** **OF 129**
PREPARED BY / DATE	ZGS 4/17/97	ZGS 7/14/98	mec 02/04/99		
CHECKED BY / DATE	JN 4/17/97	HSA 7/14/98	ZGS 02/04/99		

MULTI-CANISTER OVERPACK DESIGN REPORT

RUPTURE DISK DATA

POTENTIAL RUPTURE DISK SUPPLIERS

Address: Fike Metal Products
704 South 10th Street
Blue Springs, MO 64015

Telephone: (816) 229-3405

Fax: (816) 228-9277

Contact: Jason Patterson
Arthur Forsyth Co.
(206) 283-5716 phone
(206) 284-7269 fax

Address: Continental Disc Corporation
3160 West Heartland Drive
Liberty, MO 64068

Telephone: (816) 792-1500

Fax: (816) 792-5447

Contact: Micheael Pruitt

MULTI-CANISTER OVERPACK DESIGN REPORT

MAIN SEAL DATA

CARBONE LORRAINE

Product:	Helicoflex Seals
Model/Part No.:	H-305236 REV NC (includes U260418 Retainer clip and screw)
Address:	Helicoflex 2770 The Boulevard P.O. Box 9889 Columbia, SC 28209
Telephone:	(803) 783-1880
Fax:	(803) 783-4279
Contact:	Michel LeFrancois

OREGON IRON WORKS

HN 220 SP

HELIUM

E D R
DATE: 12-22-98

THIS DRAWING CONTAINS PROPRIETARY INFORMATION OF THE HELICOFLEX COMPANY, AND IS PROVIDED FOR ENGINEERING EVALUATION AND/OR RECEIVING AND INSPECTION PURPOSES ONLY. IT HAS BEEN ENTRUSTED TO THE RECIPIENT WITH THE UNDERSTANDING THAT ITS USE WILL BE RESTRICTED TO SUCH PURPOSE. COPYING, TRACING AND OTHER TYPES OF REPRODUCTION FOR MANUFACTURING AND/OR COMPETITIVE PROCUREMENT IS EXPRESSLY PROHIBITED BY THE HELICOFLEX COMPANY.

REVISIONS

LTR	DESCRIPTION	DATE	APPROVED
NC	RELEASED PER E.O. 7889	12-22-98	JRP

SPRING:	LINING:	JACKET:
0.138 × 0.022 (3.51 × 0.55)	0.012 (0.30)	0.012 (0.30)
MATERIAL:	MATERIAL: SS 300 SERIES	MATERIAL: SILVER

INVENTORY #	INVENTORY #	INVENTORY #
INSPECTION CODE	INSPECTION CODE	INSPECTION CODE
VERIFIED:	VERIFIED:	VERIFIED:

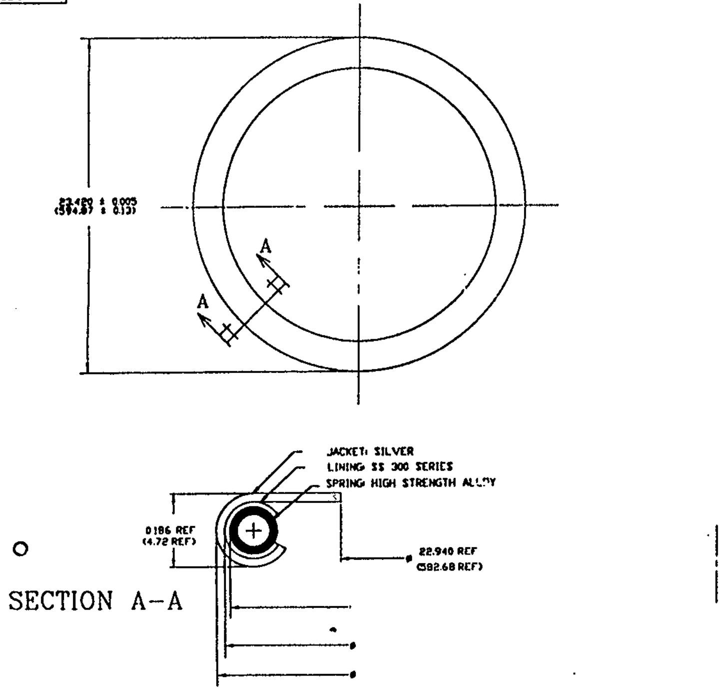

ALL DIMENSIONS IN ( ) ARE MILLIMETERS.

SCALE
NONE
MATERIAL
SHOWN
HEAT TREATMENT
NONE
PLATING OR COATING
NONE
DRAWN
KATHY ROACH
CHECKED
APPROVED

HELICOFLEX

HELICOFLEX SEAL

SIZE	CODE IDENT. NO.	
A	56257	H-305236

OREGON IRON WORKS

E D R
DATE: 1-15-99

THIS DRAWING CONTAINS PROPRIETARY INFORMATION OF THE HELICOFLEX COMPANY, AND IS PROVIDED FOR ENGINEERING EVALUATION AND/OR RECEIVING AND INSPECTION PURPOSES ONLY. IT HAS BEEN ENTRUSTED TO THE RECIPIENT WITH THE UNDERSTANDING THAT ITS USE WILL BE RESTRICTED TO SUCH PURPOSE. COPYING, TRACING, AND OTHER TYPES OF REPRODUCTION FOR MANUFACTURING AND/OR COMPETITIVE PROCUREMENT IS EXPRESSLY PROHIBITED BY THE HELICOFLEX COMPANY.

REVISIONS			
LTR.	DESCRIPTION	DATE	APPROVED
NC	RELEASED PER E.O. 7890	1-15-99	

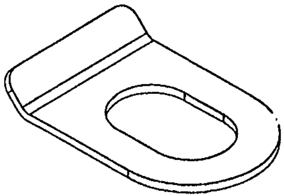

RETAINER CLIP:

U260458 REV NC

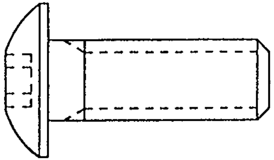

SCREW:

#6-32 UNC-3A X 3/8" LONG
HEXAGON SOCKET
BUTTON HEAD CAP SCREW
(PER ASME/ANSI B18.3)
MATERIAL: 18-8 STAINLESS STEEL

NOTES:

1. ASSEMBLY CONSISTS OF ONE CLIP AND ONE SCREW
2. SCREW REQUIRES CERTIFICATE OF CONFORMANCE

SCALE NONE	HELICOFLEX		
MATERIAL AS SPECIFIED			
HEAT TREATMENT NONE			
PLATING OR COATING NONE	RETAINER CLIP AND SCREW		
DRAWN H.S.V.			
CHECKED JSD	SIZE A	CODE IDENT. NO. 56257	U260418
APPROVED Powell			

OREGON IRON WORKS

E D R
DATE: 1/13/99

THIS DRAWING CONTAINS PROPRIETARY INFORMATION OF THE HELICOFLEX COMPANY, AND IS PROVIDED FOR ENGINEERING EVALUATION AND/OR RECEIVING AND INSPECTION PURPOSES ONLY. IT HAS BEEN ENTRUSTED TO THE RECIPIENT WITH THE UNDERSTANDING THAT ITS USE WILL BE RESTRICTED TO SUCH PURPOSE. COPYING, TRACING, AND OTHER TYPES OF REPRODUCTION FOR MANUFACTURING AND/OR COMPETITIVE PROCUREMENT IS EXPRESSLY PROHIBITED BY THE HELICOFLEX COMPANY.

REVISIONS			
LTR.	DESCRIPTION	DATE	APPROVED
NC	RELEASED PER E.O. 7902	1-13-99	

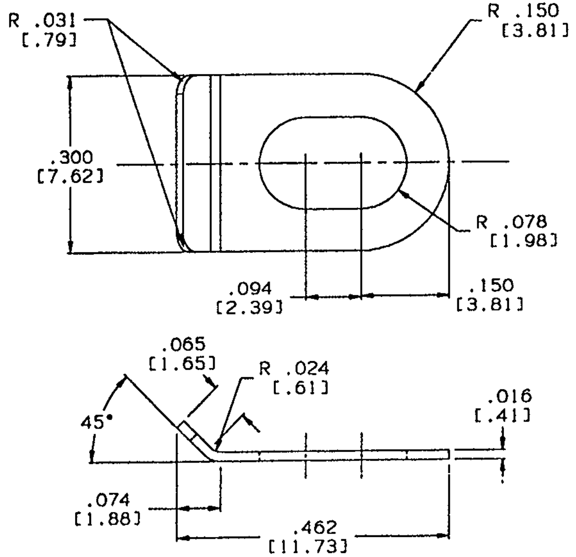

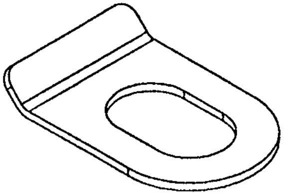

NOTES:

1. ALL DIMENSIONS ARE INCHES [MILLIMETERS]
2. TOLERANCE NOT SPECIFIED ±.010 [.25]
3. BREAK ALL EDGES

SCALE NONE	HELICOFLEX		
MATERIAL 304 STAINLESS ST			
HEAT TREATMENT NONE	RETAINER CLIP		
PLATING OR COATING NONE			
DRAWN M.S.W.			
CHECKED	SIZE A	CODE IDENT. NO. 56257	U260458
APPROVED J Powell			

Garlock Helicoflex

FAX

Date 3/11/98

Number of pages including this sheet ~~2~~ 3

TO: GERARD ANTHIONE
NORTH WEST COMPONENTS
14661 NE 35TH ST
BELLEVEUE WA98007
USA

Phone 425.861.7272
Telefax 425.861.7474

FROM: Paul Hardaway
Nuclear Applications Specialist
Garlock Helicoflex
2770 The Boulevard
Columbia, SC 29209
USA

Phone 803 783 1880
Telefax 803 783 4279

CC: ATT: HENRY AVERETTE *
STAN CROW

SUBJECT: SAMPLE SEAL LEAK TEST

Gerard,

Here is the load deflection leak test curve. It was done with a sample seal with a .176" cross section and silver jacket. The seal OD was 3.470" This was chosen as a good representative of the seal designed for the MCO cask. All theoretical values are proven to be within 10% of the empirical data or better.

Calculated Y2 load......16900 lbs
Tested Y2 load..........16100 lbs

Calculated e2........0.035" (0.031" +/- 0.004")
Tested e2............0.034"

Y1 Calculated........3500 lbs
Y1 Tested............600 lbs (under vacuum)

Tested e1............0.024"

Tested e0............0.016"

Equipment used: Tinius Olsen and Balzers helium leak detector.

Resulting leak rate at 16100 lbs and 0.034" compression = $1.2x10^{-10}$ cc/sec

Please call with any questions.

Best Regards,

4.13.5

MAR. 11. 1998 6:10PM HELICOFLEX NO. [illegible] P. 3/3

HELICOFLEX WELD SAMPLE RADIAL COMPRESSION REPORT

USTOMER:	HELICOFLEX W.O. NO.:	O-RING SERIAL NO: (W)	WELD RADIOGRAPHIC INSPECTION:	LIQUID PENETRAN
CUST. DWG. NO.:	HELICOFLEX PART NO.:	O-RING SERIAL NO: (W)	ACCEPTED: REJECTED:	ACCEPTED:
CUST. P.O. NO.:	SAMPLE SERIAL NO.:	O-RING SERIAL NO: (W)	SIGNATURE:	SIGNATURE:
NITIAL COMPRESSION @ %	REQ'D SPRINGBACK MIN.	FINAL COMPRESSION @ %	DATE: LEVEL:	DATE:
SAMPLE LENGTH:	SPRINGBACK:	TOTAL POUNDS:		

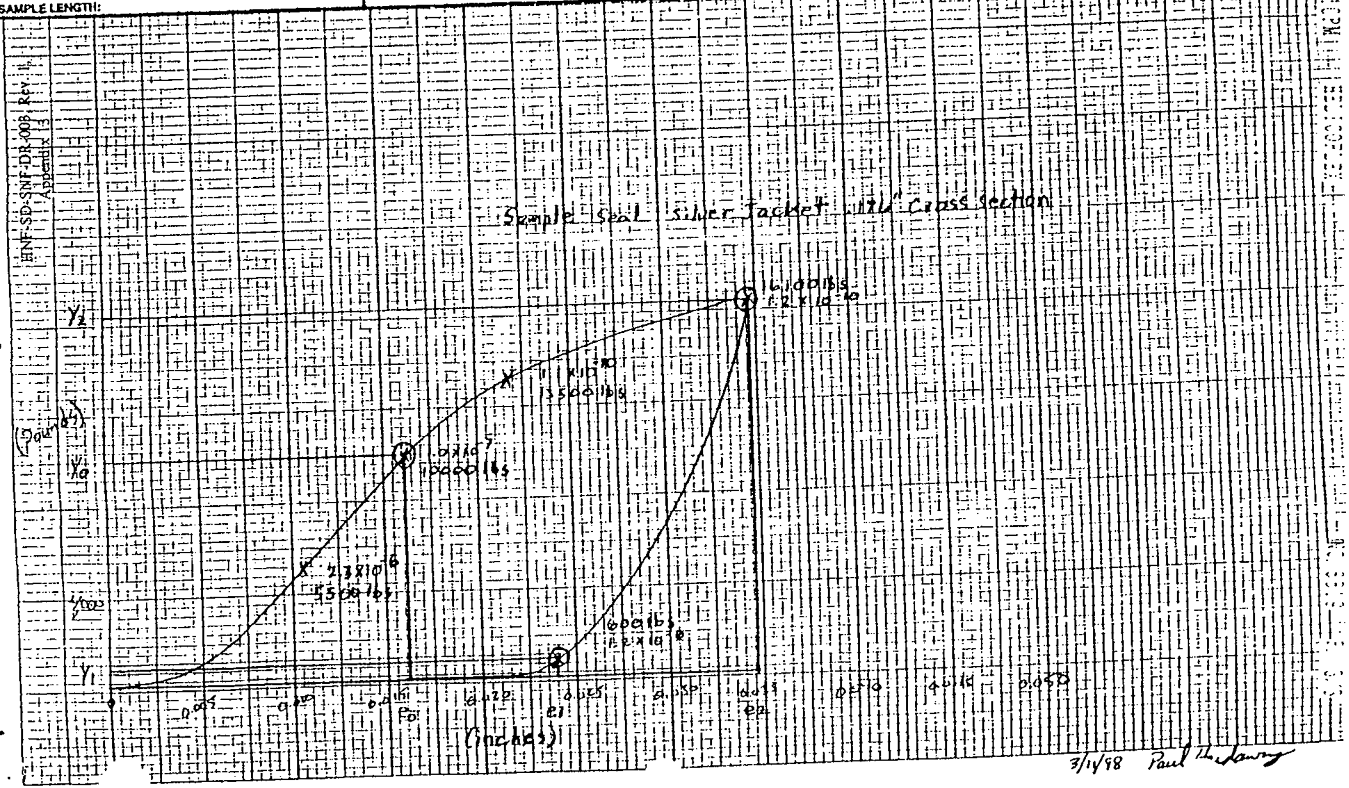

Sample Seal silver Jacket .116" cross section

3/11/98 Paul

MULTI-CANISTER OVERPACK DESIGN REPORT

SEAL DATA FOR PROCESS VALVE, COVERS, AND FILTERS

EG&G PRESSURE SCIENCE

Address: EG&G Pressure Science
11642 Old Baltimore Pike
Beltsville, MA 20705-1294

Telephone: (301) 937-9654

Fax: (301) 937-7027

Contact: Jeff Layer

Part Number Information

• Boss Seal, C-Seal 02.062 OD Face Type, Internal Pressure	PSI part number 13632
• C-Seal, 3.520 OD Face Type, Internal Pressure	PSI part number 13503
• C-Seal 1.156 OD Boss Type, Internal Pressure with Split Liner for MS 33649-12 Fitting	PSI part number 801A91-0012-A (INCO 718)
• Boss Type C-Seal, 1.843 OD Face Type, Internal Pressure with Split Liner	PSI part number 14119

GEOMETRIC TOLERANCES TO ANSI Y14.5M-1982

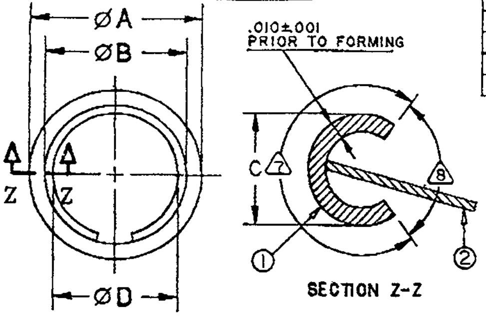

REVISIONS			
LTR	DATE	ECO NO	APPROVAL
A	06FEB98	010082	

SEAL DIMENSIONS		
AVG OD -ØA- SEE NOTE 2 6	AVG MIN ID -ØB- SEE NOTE 2 6	FREE HEIGHT -C- SEE NOTE 6
2.062 +.000 -.005	1.969	.062±.002

SPLIT LINER MIN ID -ØD-
1.800

NOTES:

1. TIG WELDING PRIOR-TO-FORMING PERMITTED.
2. MAXIMUM OUT-OF-ROUNDNESS OF DIAMETERS: .016
3. INDIVIDUALLY PACKAGE PER STANDARD AEP METHODS.
4. MARK EACH PACKAGE AS SPECIFIED ON SALES ORDER.
5. SEALING SURFACES TO CONFORM TO QCS 85345.
6. DIMENSIONS ARE PRIOR TO PLATING.
7. PLATING REQUIRED OVER THIS AREA AS SPECIFIED IN BLOCK BELOW.
8. PLATING OPTIONAL AND MAY BE INCOMPLETE IN THIS AREA.

FOR RECOMMENDED CAVITY
SEE DRAWING 13632-1

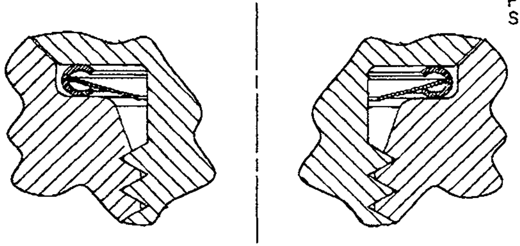

LIST OF MATERIALS				
2	1	13634	SPLIT CENTERING LINER	STAINLESS STEEL 300 SERIES
1	1	13632-1	C-SEAL	INCONEL 718 PER AMS 5596
ITEM	REQ'D	PART NUMBER	DESCRIPTION	MATERIAL

MATERIAL: SEE LIST

HEAT TREATMENT, C-SEAL: PER PS 0880, SECTION 10.0

PLATING: C-SEAL ONLY — GOLD PLATE PER PSA 0974 .0010-.0015 THICK

UNLESS OTHERWISE SPECIFIED DIMENSIONS ARE IN INCHES

TOLERANCES ON			
LINEAR DIMENSIONS			ANGLES
.X ±	.XX ±	.XXX ±	

QUALITY		13 Feb98
MFGR		13 FEB98
ENGR		05 FEB98
CHECKED		09 FEB 98
DRAWN	C FEROUZ	05FEB98
APPROVED		2-13 1998

EG&G AEROSPACE & ENGINEERED PRODUCTS
PRESSURESCIENCE™
11642 OLD BALTIMORE PIKE, BELTSVILLE, MARYLAND 20705-1294
PHONE (301) 937-4010 FAX (301) 937-0134

C-SEAL 02.062 OD FACE TYPE
INTERNAL PRESSURE
BOSS SEAL

CODE IDENT NO	DWG SIZE	DRAWING NO
15284	A	13632
SCALE: NONE		SHEET 01 OF 01

PROJECT # 10813 DIE SIZE: 02.062/062/10UIQ/GZ-RHT2

REVISIONS			
LTR	DATE	ECO NO.	APPR'L

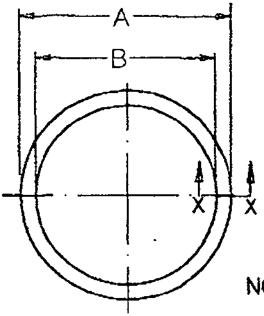

SEAL DIMENSIONS	AVG. O.D. -A- SEE NOTE 1	AVG.MIN I.D. -B- SEE NOTE 1	FREE HEIGHT -C-
BEFORE PLATING	3.520/3.510	3.310	.128/.122
AFTER PLATING	(3.519)	(3.305)	(.129)

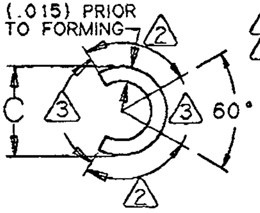

SECT. X-X

NOTES:

1. REQUIRED OUT OF ROUNDNESS OF DIAMETERS : .100-.130
2. PLATING REQUIRED OVER THIS AREA AS SPECIFIED.
3. PLATING OPTIONAL AND MAY BE INCOMPLETE IN THIS AREA.
4. INDIVIDUALLY PACKAGE PER PSI SPECIFICATION.
5. MARK EACH PACKAGE AS SPECIFIED ON SALES ORDER.
6. VARIATION IN BASE MATERIAL HEIGHT SHALL BE LESS THAN .0005"/0.5" AROUND ENTIRE PERIMETER OF THE SEAL.
7. TIG WELDING PRIOR TO FORMING PERMITTED.

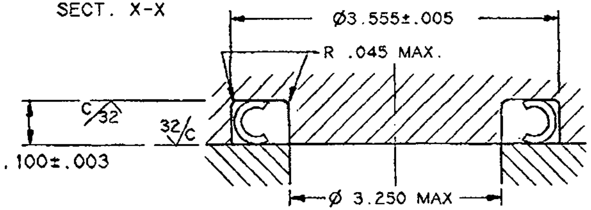

RECOMMENDED
CAVITY DETAILS

MATERIAL	PLATING	HEAT TREATMENT
MATERIAL: INCO 750 PER AMS 5598 .015±.001 THK	PLATING: SILVER PER PSA 0900 .0015-.0025 THK	HEAT TREATMENT: PER PS 0880 SECT. 11.2

UNLESS OTHERWISE SPECIFIED
DIMENSIONS ARE IN INCHES

TOLERANCES ON

LINEAR DIMENSIONS			ANGLES
.X	.XX	.XXX	
±	±.01	±.005	±1°

Q.A.	R E Hau	9-12-96
MFG	R.E.M.	9-12-96
ENG	T. Norxin	9/12/96
CHECKED	C [illegible]	[illegible]
DRAWN	H PORTER	10 SEP 96
APPROVED		12 Sep 19 96

EG&G PRESSURE SCIENCE

11642 OLD BALTIMORE PIKE, BELTSVILLE, MARYLAND 20705-1294
PHONE (301) 937-4010 FAX (301) 937-0134

C-SEAL

3.520 O.D. FACE TYPE, INTERNAL PRESSURE

CODE IDENT NO	DWG SIZE	DRAWING NO.
15284	A	13503

SCALE: NONE | EST WT N/A LB | SHEET 1 OF 1

PSI PROJECT NO: 10709 DIE SIZE CODE: 03.520/125/15P1-SSP*UHT2

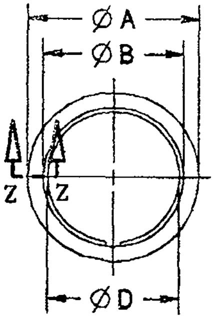

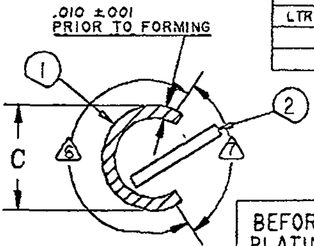

SECTION Z-Z

REVISIONS			
LTR	DATE	ECO NO	APPROVAL

	SEAL DIMENSIONS		
	AVG OD -A- SEE NOTE △2	AVG MIN ID -B- SEE NOTE △2	FREE HEIGHT -C-
BEFORE PLATING	(1.156 1.154)	(1.051)	(.063 .061)
AFTER PLATING	(1.157)	(1.048)	(.064)

NOTES:

1. TIG WELDING PRIOR TO FORMING PERMITTED.
△2 MAXIMUM OUT-OF-ROUNDNESS OF DIAMETERS: .007
3. INDIVIDUALLY PACKAGE PER STANDARD AEP METHODS.
4. MARK EACH PACKAGE AS SPECIFIED ON SALES ORDER.
5. SEALING SURFACES TO CONFORM TO AEP SPEC QCS 85345.
△6 PLATING REQUIRED OVER THIS AREA AS SPECIFIED PER AEP SPEC PS 85681.
△7 PLATING OPTIONAL AND MAY BE INCOMPLETE IN THIS AREA.
8. MINIMUM INSTALLATION TORQUE REQUIRED: 680 IN-LBS.

SPLIT LINER MIN ID -D-
.995

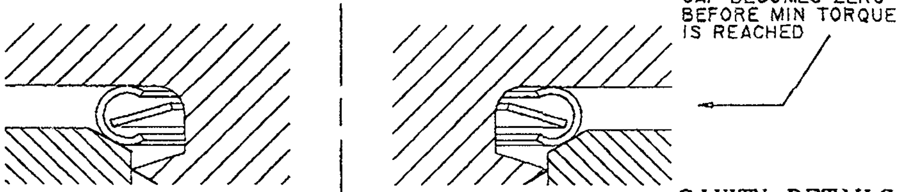

CAVITY DETAILS

LIST OF MATERIALS

ITEM	QTY	PART NO	DESCRIPTION	MATERIAL
1	1	811A91-0012-C	C-SEAL	INCONEL 718
2	1	5037-0012	SPLIT LINER	STAINLESS STEEL 300 SERIES

HEAT TREATMENT, SEAL:
NONE

PLATING, SEAL: SILVER
PER AMS 2410
.0005-.0015 THICK

GEOMETRIC TOLERANCES TO ASME Y14.5M-1994

UNLESS OTHERWISE SPECIFIED DIMENSIONS ARE IN INCHES

TOLERANCES ON			
LINEAR DIMENSIONS			ANGLES
.X	.XX	.XXX	
±	±.01	±.005	±2°

CHECKED 4-27-98
DRAWN BRINKLEY 98/04/27
APPROVED 98/04/28
B. Griffin

EG&G AEROSPACE & ENGINEERED PRODUCTS
PRESSURESCIENCE™
11642 OLD BALTIMORE PIKE, BELTSVILLE, MARYLAND 20705-1294
PHONE (301) 937-4010 FAX (301) 937-0134

C-SEAL™ 1.156 OD BOSS TYPE
INTERNAL PRESSURE WITH SPLIT LINER
FOR MS 33649-12 FITTING

CODE IDENT NO	DWG SIZE	DRAWING NO
15284	A	801A91-0012-A
SCALE: NONE		SHEET 01 OF 01

REVISIONS			
LTR	DATE	ECO NO	APPROVAL

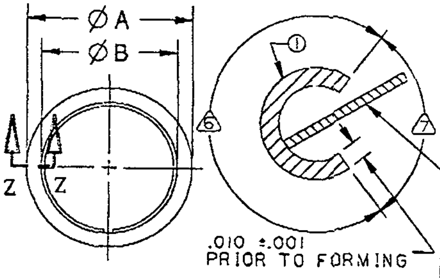

SECTION Z-Z

SEAL DIMENSIONS	AVG OD -A- SEE NOTE △2	AVG MIN ID -B- SEE NOTE △2	FREE HEIGHT -C-
BEFORE PLATING	1.843 1.838	1.739	.064 .060
AFTER PLATING	(1.843)	(1.736)	(.064)

SPLIT LINER MIN ID -D-
1.682

NOTES:

1. TIG WELDING PRIOR TO FORMING PERMITTED (PS 85613).
△2 OUT-OF-ROUNDNESS IN EXCESS OF DIAMETER TOLERANCE ALLOWED.
3. INDIVIDUALLY PACKAGE PER STANDARD EP METHODS.
4. MARK EACH PACKAGE AS SPECIFIED ON SALES ORDER.
5. SEALING SURFACES TO CONFORM TO EP SPEC QCS 85345.
△6 PLATING REQUIRED OVER THIS AREA AS SPECIFIED PER EP SPEC PS 85681.
△7 PLATING OPTIONAL AND MAY BE INCOMPLETE IN THIS AREA.

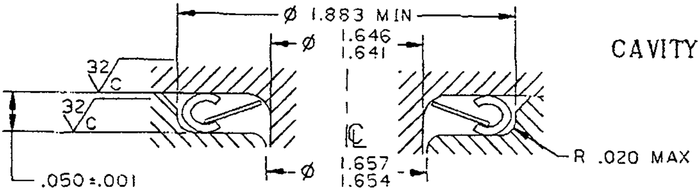

CAVITY DETAILS

LIST OF MATERIALS				
ITEM	REQ'D	PART NO	DESCRIPTION	MATERIAL
1	1	14120	C-SEAL	INCONEL X-750
2	1	14121	SPLIT CENTERING LINER	STAINLESS STEEL 300 SERIES

GEOMETRIC TOLERANCES TO ASME Y14.5M

UNLESS OTHERWISE SPECIFIED DIMENSIONS ARE IN INCHES

TOLERANCES ON			
LINEAR DIMENSIONS			ANGLES
.X	.XX	.XXX	
±	± .01	±.005	±2°

HEAT TREATMENT: NONE

PLATING:
SEAL: SILVER PER PS 0885
.0005 - .0015 THICK

EG&G® ENGINEERED PRODUCTS
PRESSURE SCIENCE™
11642 OLD BALTIMORE PIKE, BELTSVILLE, MARYLAND 20705-1294
PHONE (301) 937-4010 FAX (301) 937-0134

PRELIMINARY

BOSS TYPE C-SEAL™ 1.843 OD FACE TYPE
INTERNAL PRESSURE WITH SPLIT LINER

QA		
MFG		
ENG		
CHECKED		
DRAWN	P HALL	99 FEB 10
APPROVED		

CODE IDENT NO: 15284
DWG SIZE: A
DRAWING NO: 14119
SCALE: NONE
SHEET 01 OF 01

PROJ NO: 11132
DIE SIZE CODE: 01.843/062/10P1-/SP----2

EG&G Pressure Science has been a supplier of high performance metallic seals since 1959. Typical applications for these seals have been in aerospace, industrial, main frame computer and semiconductor processing equipment. Over the past 37 years, a large body of empirical, application-specific data has been gathered on the performance of EG&G seals; this combined with economical mass-customization of core sealing technologies has led to the positive reputation enjoyed by EG&G Pressure Science and to competitive advantages for our customers.

A Pressure Science C-Seal was chosen for this application because near zero leakage may be obtained in a cavity with a rough surface finish (up to 64 RMS). This is accomplished by plating the seal with a soft metallic plating that is smeared during compression of the seal. Gold plating is used on this seal because of the maximum temperature requirement (gold plating is used up to 1400° F). C-Seals undergo some plastic deformation when installed at the 10 to 20% squeeze recommended, however when re-used in their original cavities, they return to their original load.

In an effort to meet the re-sealability requirements (at least 5 re-seals while maintaining 1×10^{-4} cc per second Helium) on the Pressure Science SERIES 80 AN fitting seal (boss size 12 &24), three different seal face angles were considered. A standard MS33649 boss (30° angled face) and a modified MS33649 boss (with a 45° angled face) were tested, and compared with data from a cavity with parallel sealing faces (0° angle). These tests were performed using a Varian Vacuum Products Mass Spectrometer Leak Detector, using Helium at 100 psi. All three configurations were capable of containing the maximum leakage to below 1×10^{-9} cc per second Helium on the initial seal. The fixture with parallel sealing faces (0° angle) was capable of 10 reseals, staying in the 1×10^{-9} range. The other two configurations were capable of up to eight reseals in the 1×10^{-9} range, if everything was aligned and re-seated very carefully. The problem with the "conical" shaped cavity (30°- 45° angled faces) is that the seal can seat un-parallel to the top (flat surface) sealing face. The degree of offset possible is not enough to affect the initial installation / compression of the seal. However once the seal has been deformed, a new seating position with a different amount of offset may create a gap that in some locations around the circumference of the seal is either larger or smaller than the previous gap. This could create large leak paths or locally over compress the seal. Evidence of this happening is the seal free height variation after multiple reseals (as much as .005"). Normal free height variation of a compressed C-Seal is about .001 inches total.

~~A-14-7~~

MULTI-CANISTER OVERPACK DESIGN REPORT

HEPA FILTER DATA

DE&S Hanford, Inc.
P.O. Box 350
Richland, Washington 99352-0350

Hanford Operations and Engineering Contractor
for the U.S. Department of Energy
under Contract No. DE-AC06-87RL10930.

HNF-S-0556

Revision No. 2

Total Pages 5

SPECIFICATION FOR MCO INTERNAL FILTER

System No.

Equipment No.

DATE: NOV 12 1997
STA: 4
HANFORD RELEASE
ID: 3

Building: 212H

Project: W442

Impact Level:

Prepared By:

KJ McCracken
K. J. McCracken

Approved By: Date

11/11/97

11/11/97

11/12/97

HNF-S-0556, Rev. 2

MCO INTERNAL HEPA FILTER SPECIFICATION

1.0 INTRODUCTION

1.1 BACKGROUND

The MCO internal filter is required for radioactive contaminant filtration inside the MCO to protect process equipment from contamination. The filter(s) will be filtering a saturated steam atmosphere at steam flows of 100 actual cubic feet per minute (ACFM) at temperatures not to exceed 50°C and helium flows of 20 ACFM at temperatures not to exceed 375°C inside a vacuum chamber. The filter(s) shall provide HEPA removal efficiency of 0.3 micron (µm) particles and have a 40 gram loading capacity with 10 inches water column differential pressure at 35 ACFM air flow. The filter(s) shall be sized such that 11.5 inches water column differential pressure at 100 ACFM air flow clean. The filter(s) shall be capable of regeneration by back flow of gas or liquid, and be moisture repellant to saturated steam. The filter/manifold(s) shall not be larger than the envelop described in drawing H-2-828049 and be no larger than 2.6 inches in diameter (see drawing for conceptual filter arrangement scheme). The filter/manifold(s) shall be constructed of all 316 stainless steel. The filter structure shall also withstand a 100g drop and maintain a minimum of 50% of flow and filter loading capacity but HEPA efficiency is not required to be maintained after the drop.

2.0 REQUIREMENTS

2.1 FILTER DOCUMENTATION REQUIREMENTS

The bidders shall provide documentation and/or test results for the following requirements equivalent to or superseding the documents described below with their proposals:

2.1.1 Filter Airflow Resistance

Test reports or flow versus differential pressure curves for a clean airflow (Helium, steam) to meet 11.5 inches water column at 100 ACFM air.

2.1.2 Filter Removal Efficiency

Test reports documenting DOP, or other approved test material or methodology, 0.3 µm particulate removal efficiency of 99.97%.

2.1.3 Filter Loading Capacity

Test reports documenting filter loading capacity in accordance with standard SAE J726 or ASHRAE 52-76 using ASHRAE fine test dust.

2.1.4 Filter Moisture Repellency

Test report shall document filter efficiency and differential pressure performance while subjected to water spray or the filters shall provide prevention of filter wetting from splashing liquid.

2.1.5 Filter Regenerability

Test reports documenting filter regeneration (minimally 70% clean differential pressure, loading capacity recovery, and 99.97% particulate removal efficiency after regeneration) per ASHRAE 52-76.

2.1.6 Filter Rough Handling

Certificate of Conformance, test reports, or engineering calculations shall be provided confirming the filter will withstand a 100g drop or 100 times the filter(s) weight in bending and maintain 50% of original rated flow and 50% of filter loading capacity after the drop. The filter shall sustain no visible integrity loss (cracks or punctures in the filter media, endcaps, or manifold hardware.)

2.1.7 Filter Heating Resistance

Test reports documenting resistance to heated air or helium at 20 ACFM and maintain particulate removal efficiency after 240 hours of 375°C per standards UL-586 and MIL-F51068.

2.2 FILTER DESIGN REQUIREMENTS

2.2.1 Filter Airflow Resistance

The filter(s) shall be sized for a clean airflow (Helium, steam) of 11.5 inches water column at 100 ACFM air.

2.2.2 Filter Removal Efficiency

The filter(s) shall be designed to withstand a DOP challenge, or other approved test material, of 0.3 μm particulate and remove 99.97% of the particulate.

2.2.2 Filter Loading Capacity and Surface Area Maximization

The filter(s) shall provide maximum resistance of 10 inches water column when loaded with 40 grams of ASHRAE fine test dust at 35 ACFM air in accordance with standard SAE J726 or ASHRAE 52-76. The filter(s) shall also be designed to provide a maximum surface area square footage.

2.2.3 Filter Moisture Repellency

The filter(s) shall provide maximum repellency of 10 inches water column when the filter is challenged with supersaturated steam containing a minimum 1 gram of entrained water per 1 cubic foot of air at 35 ACFM or the filter shall prevent liquid penetration from external splashing.

2.2.4 Filter Regenerability

The filter(s) shall be capable of reverse back pulsing with gas to regain minimally 70% loading capacity as specified in Section 2.2.2 and differential pressure and 99.97% particulate filtration per ASHRAE 52-76. The gas reverse back pulse shall consist of rapid application of reverse flow of helium or argon to the filter manifold (all filters) from a reservoir with a maximum size of 5 cubic feet, at a maximum initial pressure of 100 psi through a 20 foot length of 1 inch ID maximum discharge line.

2.2.5 Filter Heating Resistance

The filter shall be designed to with stand resistance to heated air or helium at 20 ACFM and maintain particulate removal efficiency after 240 hours of 375°C per standards UL-586 and MIL-F51068.

2.2.6 Filter Design Basis Accident Functionality

The filter/manifold(s) shall be designed to withstand a 100g drop or 100 times the filter(s) weight in bending and maintain 50% of original rated flow and 50% of filter loading capacity after the drop. The drop or force loading to the filter shall be applied midway on the filter in a radial direction normal to the longitudinal filter axis. The filter shall also be designed to physically withstand forces related to a 1035 kPa (150 psig) pressure spike transient and maintain 50% flow and 50% loading capacity after the pressurized pulse. The intent of this requirement is to maintain a high removal efficiency (non-HEPA rated) by assuring no visible holes, punctures, cracks, or extensive deformations that circumvent or block the filter flow path.

2.3 CONSTRUCTION REQUIREMENTS

2.3.1 Filter Media

The filter(s) shall be all stainless steel construction--316L, or other suitable corrosion resistant materials. Filter end caps (if required) shall be constructed from 316L stainless steel and NOT attached to filter media by epoxies or sealants. Rolled or metallic end cap bonding such as welding or brazing may be appropriate. If weld bonding is utilized, it is suggested that low carbon base materials such as 316L or other similar corrosion resistant materials be used.

2.3.2 Filter Mounting Hardware

The filter(s) mounting hardware (i.e. supports, manifolds, etc.) shall be constructed from 316L stainless steel, other low carbon base, or corrosion resistant material (painted surfaces shall not be acceptable). The filter(s) shall be mounted to manifold in such a manner to prevent build-up of excess free water inside the manifold. The filter(s) shall be mounted near (+/- 0.0625 inches) the bottom of the manifold and the manifold angled such that any free water in the manifold will drain back into the filter media. The total weight of the filter and mounting hardware shall not exceed 22.7 kg (50 lbs). Refer to drawing H-2-828049 for filter envelop space, mounting suggestions, and additional construction suggestions.

2.3.3 Filter Environmental Conditions

The filters shall be designed and constructed to withstand the following environmental conditions:

- Design Basis Accident equal to a 100g drop or 100 times the filter(s) weight in bending per design stated above;
- Temperature ranges from -20 to 375°C (375°C for a time period of 240 hours);

- Internal to external accidental pressure spike transient of 1035 kPa (150 psig) as described above; and
- All gas atmospheres such as Nitrogen, Hydrogen, Helium, Argon, Oxygen, air, and steam.

MULTI-CANISTER OVERPACK DESIGN REPORT

K BASIN MCO SHIELD PLUG THICKNESS TECHNICAL EVALUATION

TABLE OF CONTENTS

1.0 INTRODUCTION AND SUMMARY

This evaluation provides an assessment of dose as a function of plug thickness for the K Basin Multiple Canister Overpack (MCO), including an initial assessment of areal and centerline doses. Based on input from Westinghouse Hanford Company, areal averages were calculated for the more complex plug designs. The emphasis has been on obtaining the thickness that will result in an average dose rate of 100 mrem/hr or (30 mrem/hr) at contact on the plug for peak loads and nominal loads of fuel, respectively. The calculations are based on the design planned by Parsons Infrastructure & Technology Group and summarized in Table 1-1 below. This report provides a summary of the technical assumptions, basis, and results of the calculations.

Table 1-1.

Source Term	Cleaned and reloaded Mark IV fuel elements; 5.43 MTU; 11 energy bins; 8.29 x 10+15 photons/s
Model Geometry	27cm SS lid; 4 instrument penetrations; 1" central and lateral holes thru lid; 4 cm SS plate under filters; collar in place
Detector Geometry	Tissue equivalent plastic in 3 thicknesses and 8 rings
Requirement --< 100 mrem/h contact, areal average (Peak Load0	< 7 mrem/h photons and neutrons
Requirement -- < 30 mrem/h contact, areal average (Nominal Load)	< 2 mrem/h photons and neutrons

2.0 GENERAL APPROACH

For modeling purposes, each fuel element in the MCO is assumed to be 2 concentric shells of uranium, and each of these shells are treated as separate sources for analyses. This calculation uses MCNP 4A to allow a more realistic model of the MCO and to directly determine the impacts of scattering. The MCNP software is a Monte Carlo shielding analysis program, which assesses the shielding based on nuclear interactions. Figure 1-1 summarizes the presumed geometry of the fuel. The density of the uranium, steel, and air matrix is listed in Section III. Fifty-four fuel elements are assumed per layer, four layers, and no gap between layers. The center space (number 28 in Figure 2-1B) is occupied by an air filled stand pipe.

The basic assumptions are summarized below:

- The shielding calculation used the extremely conservative activity concentrations in Table 3.8 of WHC-SD-SNF-TI-009, Rev. 0. These values were used to ensure a corresponding level of conservatism in the results. The photon emissions of these radionuclides were placed in 12 energy bins from 100 keV to 3 MeV. If the total yield fraction is less than 1 X 10^{-6} the contribution is treated as zero.

- Nominal fuel calculations are based on the an average 4-tier Concept B MCO of Mark IV fuel, as specified in Table 3.8 of WHC-SD-SNF-TI-009, Rev. 0.
- The dose is calculated by determining the energy absorbed per gram in the plastic material used in the ICRU sphere.
- The dose assumes a layer of this material directly above the top of the MCO.
- Three different thickness of material were assumed (i.e., 1cm, 15cm, and 30 cm) to provide a result comparable to the 15 cm radius ICRU sphere. Note that the detectors are cylindrical rings except for the inner most detector, which is a disk. The diameters of these rings were 1, 5, 10, 15, 20, 25, 30, and 32.5 cm in radius.
- For the neutron dose assessment, the dose is assumed to be 10% of the gamma dose based on the information in the procurement documentation.

The geometry and shield data used in calculating the shielding are summarized in Figures 2-1A through 2-1D. The general model of the MCO, lid, and fuel used in the calculations is shown in Figure 2-1E. The current design is summarized in the drawings included in the reference listing.

Figure 1-1
Fuel Geometry Information

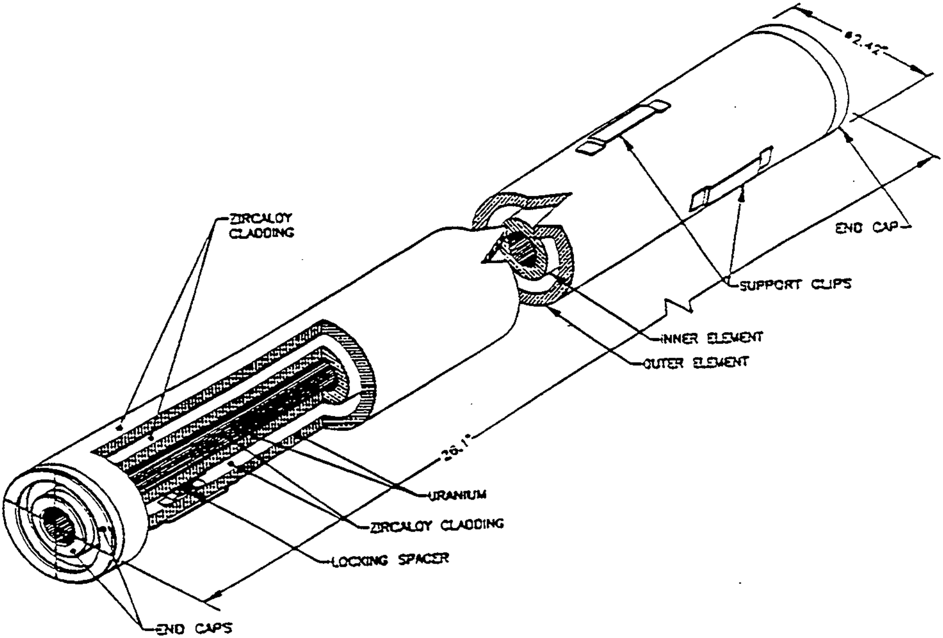

105—N REACTOR MARK IV FUEL ELEMENT ASSEMBLY
(DS00015A)

3 of 23

Figure 2-1A
MCO Geometry
(Full length vertical cross section, dimensions in cm)

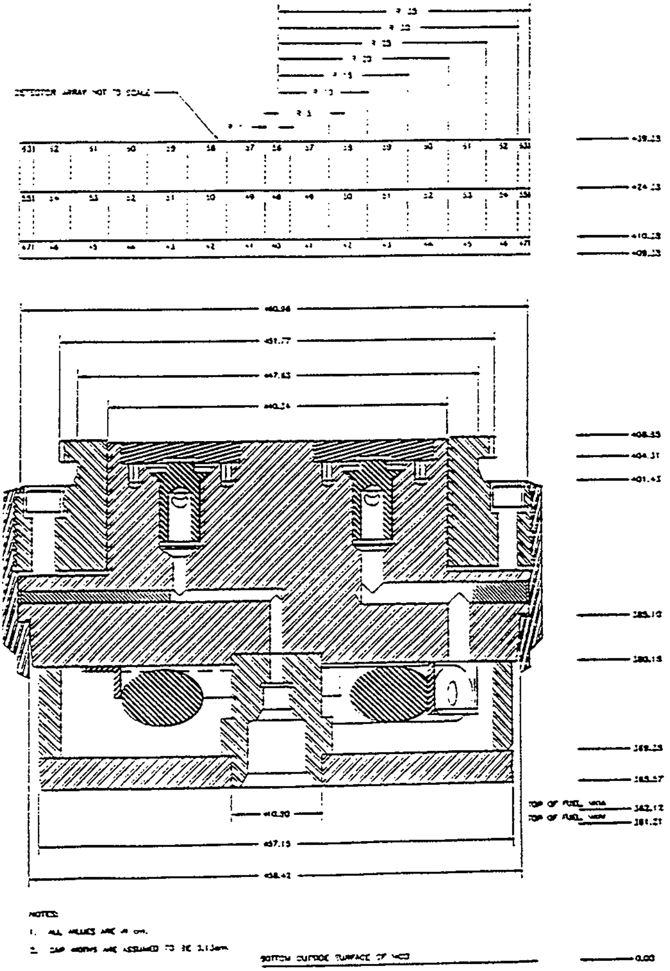

Figure 2-1B
MCO Geometry
(Fuel element horizontal cross section, dimensions in inches. Number 28 is an open pipe.)

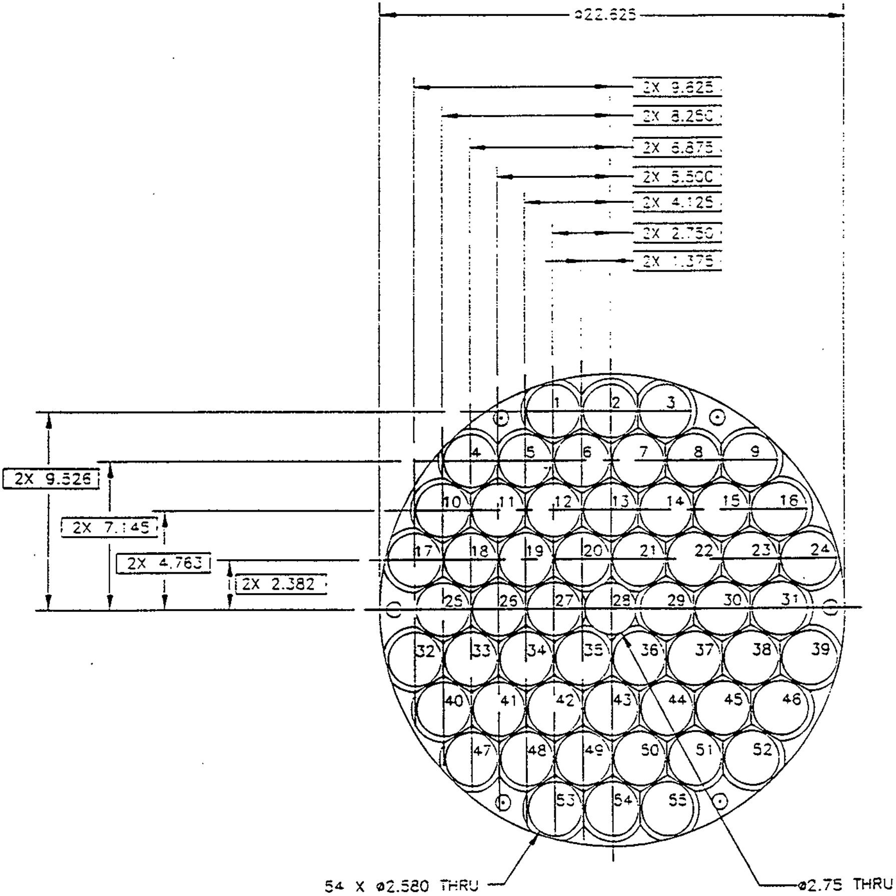

Figure 2-1C
MCO Geometry
(Lid vertical cross section, dimensions in inches)

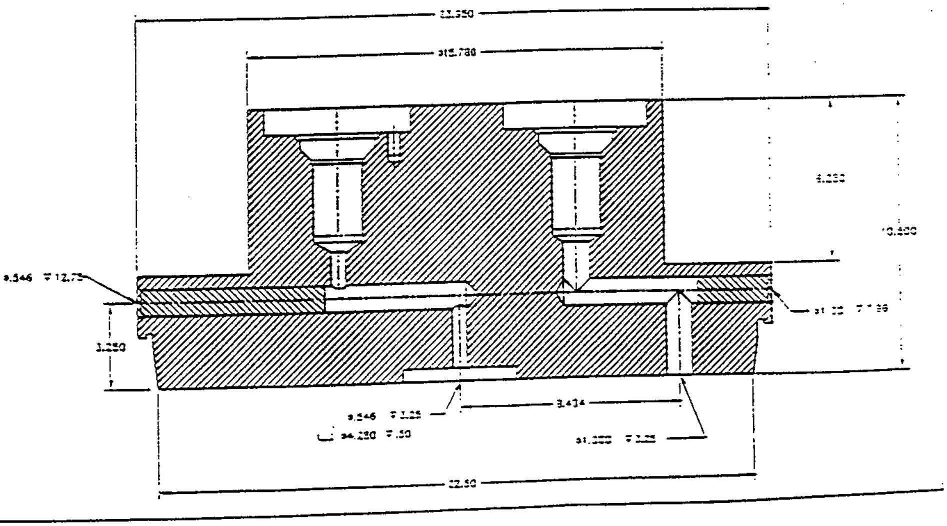

Figure 2-1D
MCO Geometry
(Lid Horizontal cross section, dimensions in inches)

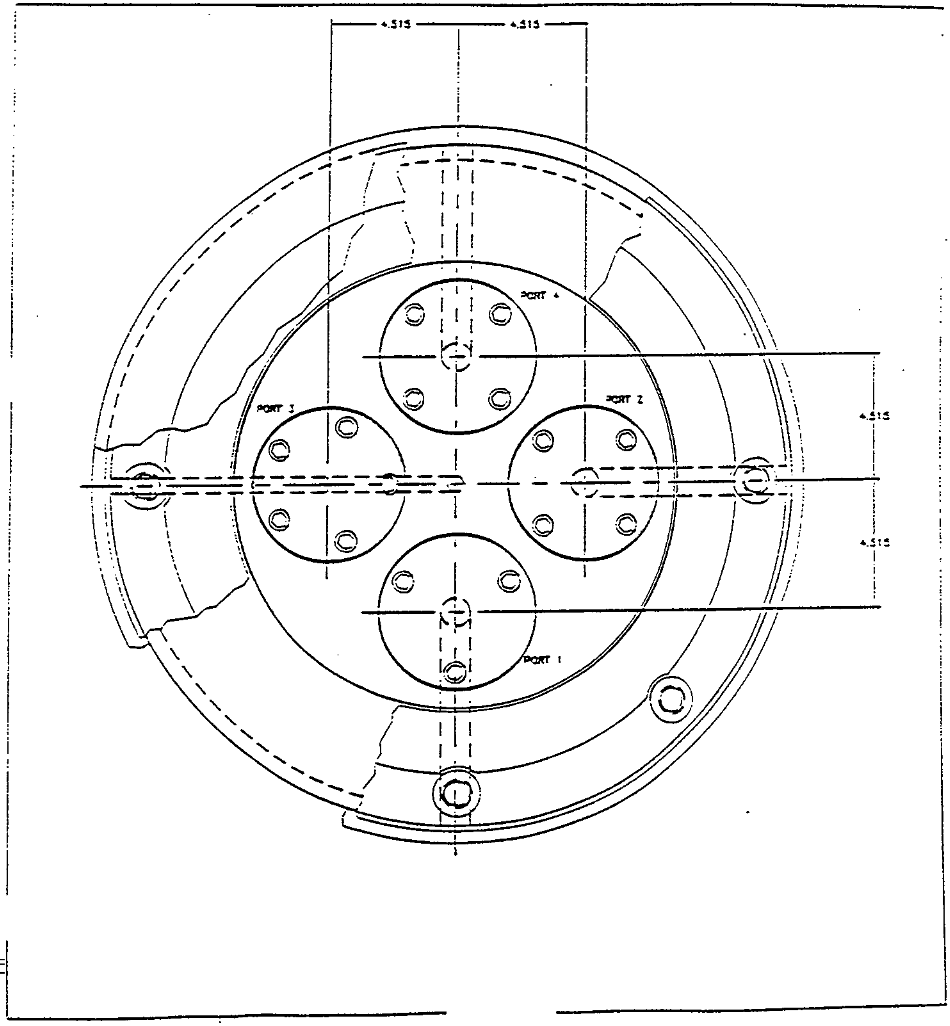

Figure 2-1E
Model of MCO and Fuel Used for Calculations

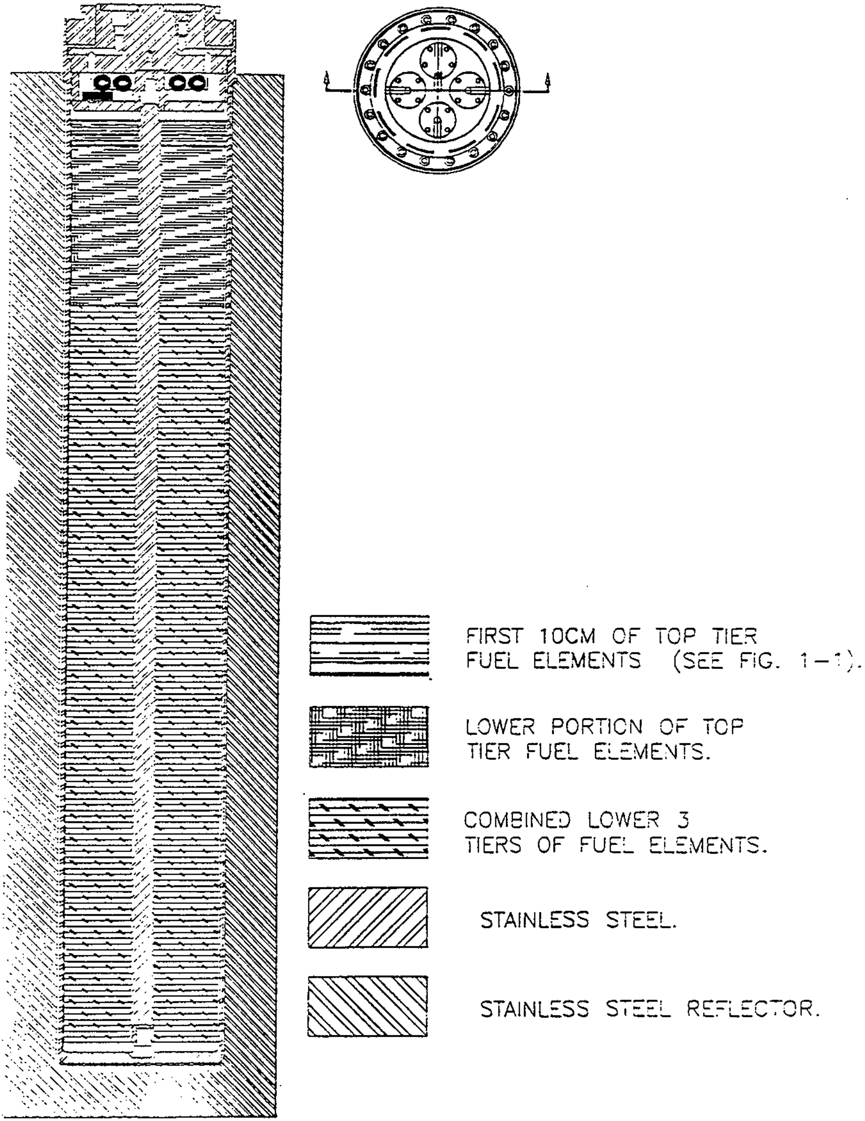

3.0 SHIELDING ANALYSIS

The shielding analysis used MCNP 4A, a computer application developed by Los Alamos National Laboratory. This computer program is documented in "MCNP 4A Monte Carlo N-Particle Transport Code System," Radiation Shielding Information Center (RSIC) document CCC-200 (see references). This software was validated in the Parsons Infrastructure & Technology Group Computer Software Validation Record, consistent with the applicable procedures. The verification of performance (completed under another DOE contract and part of a prior task) was documented in the Parsons Infrastructure & Technology Group Computer Software Verification Record number PD-A-VV-003.

The MCNP 4A output files, which include a reflection of the input deck, are maintained in the Parsons Infrastructure & Technology Office in Richland, Washington as part of the quality records associated with this calculation.

3.1 Source Term

The fission and activation product inventory from Table 3.8 of WHC-SD-SNF-TI-009, Rev 0, was used as the source term for this calculation. This source has been corrected for decay to January 1, 1995, in this table. Loaded MCO handling will not begin until 1997; however, no adjustment from January 1, 1995 to the 1997 time frame was made, as an additional means to ensure conservatism. The uranium content in the fuel was based on the data in Table 3.8 of WHC-SD-SNF-TI-009, Rev. 0. The emission spectra are based on the information in the Brookhaven database (see Appendix A). The relative energy is calculated based on this data and is summarized in Table 3-1 of this document. As indicated previously, the energy distribution is binned as discussed in Section II. Each bin value represents the upper bound of the energy bin. Therefore, the Cs-137 662 keV photon was treated as an 800 keV photon. This is conservative by about a factor of 3-4. In the 600 keV bin, it would have been non-conservative by about a factor of 2. The total fuel weight per MCO was 5.43 MTU. The total source strength was 8.294 x 10^{15} photons per second.

Table 3-1.
Energy Distribution

Upper Energy Bound (keV)	Fraction
100	0.089
200	.206
300	.0032
400	.00037
500	.19
600	.0047
800	.496

1000	.0031
1500	.0059
2000	.00076
2500	.0000083

3.2 Geometry

The geometry is shown in Figures 2-1A and 2-1B. It is assumed that the tolerance is 0.13 cm; this is assumed to be the width of the gaps for assessing scattering. The ports at the top of the MCO shield plug are assumed to be filled with inserts which reduce the holes passing through the ports to one inch, except for the rupture disk port which has no insert. The port cover plates are **not** in place in any of the calculations.

3.3 Material Densities

The MCNP input includes the density and the makeup of the materials. This information is summarized in Table 3-2.

Table 3-2.
Material Properties

Material	Density (g/cm^2)	Material Constituents (Cross-section file number [i.e., MCNP cross-section file][*] and weight fraction)
Steel	8.03	26000 (1)
Air (gas)	0.001293	7000 (0.755), 8000 (0.232), 18000 (0.013)
Uranium	17.86	92000 (1)
Tissue (ICRU)	1.0	1000 (0.102), 6000 (0.123), 7000 (0.035), 8000 (0.72893), 11000 (0.0008), 12000 (0.0002), 15000 (0.002), 16000 (0.005), 19000 (0.003), 20000 (0.00007)
[*]The MCNP is the atomic number multiplied by 1000. For example, the atomic number of carbon is 6, so the cross-section file number is 6000.		

3.4 Analysis Basis

The shielding analysis was completed for each of the two uranium portions (i.e., concentric shells) of each fuel element for the top layer or tier of fuel elements (see Appendix B). However, to improve convergence of the results, the first 10 cm of each top tier fuel element is treated as a separate source. Representative fuel elements were selected for running after the top 10 cm of the first tier rather than running all 108 cases, as a means to reduce analysis time. The bottom 3 tiers fuel element tiers are treated as a single unit and have negligible impact on the results, due to self-shielding effects. Calculations relative to the bottom 3 tiers fuel elements are not included in the spreadsheets referenced in the appendices of this document; however, they are included in the computer output files maintained with the quality assurance records.

4.0 RESULTS

MCNP was used to calculate the energy deposition per photon in a 1cm, then 14cm, and an additional 15 cm thick disk of ICRU tissue equivalent plastic. With the known photon flux the energy deposition per unit time was then calculated. This was then converted to dose using the definition of a rad which is 100ergs/g of energy deposition in tissue. The choice of the detector thickness was chosen to provide worst case and an range which covers the ICRU 15 cm radius sphere (i.e., the basis for deep dose). What we calculated was the average energy per gram of tissue deposited in the first cm of tissue, a 15cm thick layer of tissue, and a 30 cm thick layer of tissue. This provides a accurate direct method of assessing dose; although using a ICRU sphere center at each location would have been mor accurate, it was not technically feasible. This approach is consistent with the current ICRP approach for assessing the dose used by EPA, DOE, and NRC. The calculation of flux though a detector is an indirect rather than direct method Of assessing the dose and may be less accurate.

The results of the calculations are summarized in Table 4-1. These results were calculated using the spreadsheets referenced in Appendix B. As indicated in Section 2, data is given for a disk/ring source 1cm, 15 cm, and 30 cm thick; areal averages are given in the last two rows. The bottom row in this table includes the neutron dose consistent with the assumptions identified in the proposal (i.e., the neutron dose is 10% of the photon dose). The dose measured by an ionization chamber at about 1 to 2 inches above the MCO top would probably be similar to the doses specified for 1 cm thick disk. The doses for the 15 and 30 cm disks would provide the probable range of actual dose to an individual consistent with the ICRU model for deep dose.

The doses in Table 4-1 are for peak loading. The doses for the average fuel load would be about 26% of these values.

5.0 UNCERTAINTIES

The presence of a steel plug over the central cylindrical tube was not included in the original model. The reduction in doses from this plug were estimated using MCNP as described in Appendix C. This dose will range from 100% to 45% of the original values depending on the location. In the central area, where most of the areal dose is generated, the dose will range from about 100% to 65%. Overall, the plug introduces less than 10% measure of conservatism for the doses. Convergence with this data is very high.

The MCNP software provides an assessment of convergence. When using a Monte Carlo program it is necessary to use enough particles (i.e., case studies) to adequately represent the behavior of the system (i.e., obtain convergence of the predicted results with the true results). This must always be a compromise between the time required to run the calculation and the amount of convergence obtained. Approximately 10,000,000 particles (i.e., cases studies) were run for each source term analyzed. This means since each fuel element or section of fuel element (i.e., the upper 10 cm of the first fuel element) has an inner and outer portion each of these portions were run for 10,000,000 particles. Because of the limitation of time the goal was to achieve a convergence of about 0.3 or better for the most affected detector and less than 0.2 for areas that are significant dose contributors. Other detectors would have lower convergences for a specific source. Since the higher values of convergences have a larger uncertainty, the doses were recalculated using values with convergence results of less than 0.3 for one of the analyses. The results of this recalculation were comparable so it is reasonable to assume that the estimate is reasonable and conservative. Since the basic source geometry is simple it is a reasonable assumption that the area where there would be significant dose contributions would be the area where the convergence is low, since the photon flux in these area is the highest. Note, the top layer of source (i.e., the upper 10 cm of the first fuel element) requires 108 separate runs and each run requires about 7 hours to complete so the 10,000,000 particles analysis reflects a reasonable limit for this analysis.

The results for the MCO without the cap (Table 4-1) indicate a higher degree of accuracy. In this scenario, convergence values are all lower than 0.3 except for the center detector (see Appendix B). Since there is not fuel directly below the center detector, the detector is not a significant contributor to the dose. This means that limited convergence for this case and any accompanying inaccuracies will have no significant impact on the overall dose estimate. Also, better results and convergence were possible in the calculations for this case from knowledge of the ratio of inner cylindrical section contribution relative to the outer cylindrical section contribution that had been ascertained from the first set of calculations (where the MCO cap was attached). With this ratio pre-determined (the value is constant for all scenarios) the data could be consolidated for the fuel sections, which had the impact of minimizing statistical uncertainties. Consequently, the calculations for the scenario without the MCO cap in place have much lower uncertainties and better accuracy, notwithstanding the same 10,000,000 particle case study Monte Carlo analysis was used.

Table 4-1
Dose Results Without Cover Cap

Outer Radius of Detector (cm)	1 cm Detector		15 cm Detector		30 cm Detector	
	Thickness (cm)	Dose Rate (mrem/hr)	Thickness (cm)	Dose Rate (mrem/hr)	Thickness (cm)	Dose Rate (mrem/hr)
1	1	< 3	1 to 14	< 17	15 to 30	< 2
5	1	< 8	1 to 14	< 8	15 to 30	< 3
10	1	< 17	1 to 14	< 13	15 to 30	< 5
15	1	< 23	1 to 14	< 13	15 to 30	< 3
20	1	< 7	1 to 14	< 7	15 to 30	< 3
25	1	< 3	1 to 14	< 2	15 to 30	< 2
30	1	< 3	1 to 14	< 2	15 to 30	< 2
32.5	1	< 3	1 to 14	< 2	15 to 30	< 2
Areal Average	1	< 7	15	< 5	30	< 3
Areal Average plus neutron dose	1	< 7	15	< 5	39	< 3

6.0. REFERENCES

Courtney, J. C., 1976. "A Handbook of Radiation Shielding Data," American Nuclear Society, ANS/SD-76/14.

Radiation Shielding Information Center (RSIC), 1989. "QAD-CGGP," CCC-493.

Rockwell, Theodore III, 1956. Reactor Shielding Design Manual, McGraw-Hill Book Co., Inc.

Los Alamos National Laboratory, 1995. “MCNP 4A Monte Carlo N-Particle Transport Code System,” Radiation Shielding Information Center, (CCC-200).

Willis, W. L. and A. N. Praga, 1995. "105-K Basin Material Design Basis Feed Description for Spent Nuclear Project Facilities," WHC-SD-SNF-TI-009, Rev. 0.

Parsons Infrastructure & Technology Group Internal Documentation:

Computer Software Verification Plan, Project No. PD-A-VV-003, MCNP 4A: A Monte Carlo N-Particle Transport Code, December 18, 1996.

Computer Software Validation Record, “MCNP 4A: A Monte Carlo N-Particle Transport Code, December 18, 1996.

Computer Software Verification Plan, Project No. 7282651-03000, Computer Software: SUPERSHIELD, Discipline: Health Physics, Version: 1.0, draft November, 1995.

Appendix A
Source Terms

Appendix A, Source Term

The determination of the source term was based on the Brookhaven National Laboratory data from the Internet (i.e., www.nndc.bnl.com). This is the most current emission spectra data available. The calculations were performed using an EXCEL 7.0 spreadsheet, containing 3 sheets. The calculation sheets are described below, and the spreadsheet output is available in the Parsons Infrastructure & Technology Group QA and/or project files for Project KH-8009-8, project number 730531.

Sheet 1 uses the photon data from sheet 2 to find the sum the photon emissions from each radionuclide for each of the energy bins in Table 3-1.

Sheet 2 is the data downloaded from the Brookhaven database.

Sheet 3, Cells B4 to Y20 summarizes the photon emissions for each of the energy bins by radionuclides from Sheet 1. Cells C6 to Y6 provide the activity of each radionuclide per MTU based on the data specified in WHC-SD-SNF-TI-009, Rev 0. Cell Z6 is the total activity. Cells AC4 to BA20 calculate the total photon emissions in each bin (i.e., BA4 to BA20 contain the totals from cells AC4 to AZ20). Cells AC4 to AZ20 are the activities of the radionuclides times the photon emissions in the bin divided by the total activity. Cells E36 to E48 normalize the photon emissions to photon emission fractions based on cells BA4 to BA20.

Appendix B
Calculation of Results

Appendix B, Calculation of Results

The calculations were performed using an EXCEL 7.0 spreadsheet, containing 4 sheets. The calculation sheets are described below, and the spreadsheet output is available in the Parsons Infrastructure & Technology Group QA and/or project files for Project KH-8009-8, project number 730531. Sheets 1 and 2 address the dose with the cover cap in place and sheets 5 and 6 address the dose without the cap in place.

Dose With Cap

In Sheet 1 the energy flux absorbed (i.e., MeV/photon/g) and the value of the convergence from the MCNP are included in the value column for each detector (i.e., see Table B-1 and Row 1 in the spreadsheet). The energy flux absorbed is in the odd number rows and the convergence value is in the even numbered columns for the various detector cell numbers. The first two entries for any MCNP cell (i.e., Column A) are the outer concentric ring of fuel material and the second two are the inner ring of fuel material for a fuel element. Matrix Total adds the inner and outer ring energy flux absorbed data. Odd number rows are set to one in the Convergence columns and the first three rows in the Matrix Total columns are set to zero so they have no impact on the results. The even numbered rows in the Convergence column are set to one if the convergence value is zero (i.e., no data detected); otherwise they are set to the value of the convergences. Row 225 has the total energy flux absorbed and the lowest value of the convergence for MCNP cell for the first layer of fuel (i.e., the top 10 cm of a first fuel element). Row number 450 has the same data for the second layer of fuel (i.e., the balance of the top fuel element). Row number 457 has this same data for both layers. The areas in light gray in the second layer are MNCP numbers; the other values are based on these numbers as shown in Table B-2. Note that MCNP cell 28 has no fuel in it so its values are zero - it is marked with dark gray.

Sheet 2 Rows 3 to 10 and columns E, L, and S contains the grand total energy flux absorbed. The dose is then calculated in columns F, M, and T using the values shown in rows 14 to 38. The lowest applicable convergence values from Sheet 1 are summarized in columns G, N, and U. The total for each detector is then calculated in row 11. Row 12 is the cumulative dose from a 1cm thick, 15 cm thick, and 30 cm thick detector. Similar values were calculated below this with the cover cap off using a Microshield correction factor for the reduced shielding (see Appendix C for the Microshield runs) and then for the same calculation using this Microshield data for cover cap off but with an additional 4 cm of shielding over the first 25 cm of the MCO top.

Dose Without Cap

The layout and calculations in sheets 5 and 6 are the same as sheets 1 and 2 discussed above except as described below. The dose from the inner cylinder is based on the dose from the outer cylinder, corrected based on the relative ratio between the inner and outer cylinders from sheet 1 and averaged over all values with a convergence value of less than 0.3.

Table B-1.
Detectors

Inner Radius (cm)	Outer Radius (cm)	Detector Thickness (cm)	MCNP Cell Number for Detector
0	1	1	40
1	5	1	41
5	10	1	42
10	15	1	43
15	20	1	44
20	25	1	45
25	30	1	46
30	32.5	1	47
0	1	14	48
1	5	14	49
5	10	14	50
10	15	14	51
15	20	14	52
20	25	14	53
25	30	14	54
30	32.5	14	55
0	1	14	56
1	5	15	57
5	10	15	58
10	15	15	59
15	20	15	60
20	25	15	61
25	30	15	62
30	32.5	15	63

Table B-2.
MCNP Cell Equivalence for Second Layer

MCNP Cell Basis for Unanalyzed Cells	Cell To Which This Applies
(2+17+24)/3	1,3,4,10,16,32,39,40,46,47,52,51,53,54,55,
25	8,31,48, 58
33	6,7,11,15,18,23,38,41,45,49,50
(26+30+44)/3	12,13,14,19,22,26,30,34,37,42, 43,44,
31	20,21,27,28,29,35,36

Appendix C
Ratio Based Internal Central Cylinder Plug

Appendix C, Ratio Based Internal Central Cylinder Plug

Sheet 7 contains the MCNP run results with no cap on the MCO and no lid. The fuel is bare except for the small plug over the center cylinder (the "AP##" files) and the same case with this small plug removed (the "AP##a" files). The ratio is calculated in the indicate column. The next two columns are the ratio minus the layer specific mean and minus the general mean, respectively. The calculations of the mean and standard deviation are shown, as well as the projected error from averaging, which is assumed to be twice the standard deviation.

Sheet 7 used data with no top or cap but with the plug in place. These values are calculated based on the steel plug compared to the ratio with a plug made only of air. This was calculated for cells 2, 7, 13, and 20. The results for the first layer are summarized in Table C-1 and indicates the cells to which they would apply. Sheet 7 of the EXCEL spreadsheet can be found in the project files.

Table C-1.
Plug Correction for the First Layer

Calculated Cell	Equivalent Cells	Plug Shield Correction Factors for Each of the Detector Disks/Rings ±0.05 (Radius of Disk/Ring in cm)							
		1	5	10	15	20	25	30	32.5
2	1,3,4,910,17,24,32,39,40,46,47,52, 53,54,55	1.00	1.00	1.00	1.00	1.00	1.00	1.00	1.00
6	5,7,8,11,15,18,22,25,30,31,33,37,41, 45,48,49,50,51	1.00	1.00	1.00	1.00	1.00	.95	.95	.95
13	12,14,19,23,26,34,38,42,43,44	.90	.95	.90	.90	.90	.90	.90	.90
20	16,21,27,29,35,36	.45	.60	.65	.70	.75	.80	.90	.90

A-16.25

MULTI-CANISTER OVERPACK DESIGN REPORT

WAREHOUSE PLAN FOR MULTI-CANISTER OVERPACK

(Please refer to HNF-SNF-PLN-021, Rev. 0)

TBD KES 2/18/99

MULTI-CANISTER OVERPACK DESIGN REPORT

This appendix deleted.

MULTI-CANISTER OVERPACK DESIGN REPORT

MULTI-CANISTER OVERPACK FABRICATION SPECIFICATION

(Please refer to HNF-S-0453, Rev. 3 TBD)

and

MULTI-CANISTER OVERPACK SPENT NUCLEAR FUEL BASKETS FABRICATION SPECIFICATION

(Please refer to HNF-3868 Rev. 0 TBD)