50/1-5-76

Dc-485

UCRL-52083

SAFETY ANALYSIS REPORT FOR PACKAGING: NEUTRON SHIPPING CASK, MODEL 0.5T

R. T. Peterson

June 11, 1976

MASTER

Prepared for U.S. Energy Research & Development Administration under contract No. W-7405-Eng-48

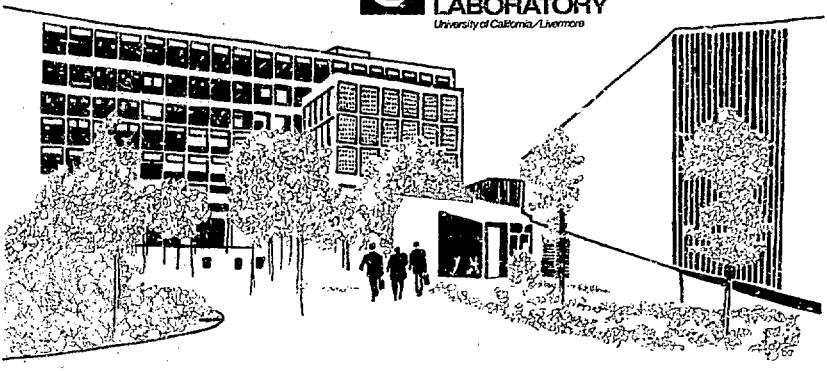

NOTICE

This report was prepared as an account of work sponsored by the United States Government. Neither the United States nor the United States Energy Research & Development Administration, nor any of their employees, nor any of their contractors, subcontractors, or their employees, makes any warranty, express or implied, or assumes any legal liability or responsibility for the accuracy, completeness or usefulness of any information, apparatus, product or process disclosed, or represents that its use would not infringe privately-owned rights.

NOTICE

Reference to a company or product name does not imply approval or recommendation of the product by the University of California or the U.S. Energy Research & Development Administration to the exclusion of others that may be suitable.

Printed in the United States of America
Available from
National Technical Information Service
U.S. Department of Commerce
5285 Port Royal Road
Springfield, VA 22161
Price: Printed Copy $; Microfiche $2.25

Page Range	Domestic Price	Page Range	Domestic Price
001–025	$ 3.50	326–350	10.00
026–050	4.00	351–375	10.50
051–075	4.50	376–400	10.75
076–100	5.00	401–425	11.00
101–125	5.50	426–450	11.75
126–150	6.00	451–475	12.00
151–175	6.75	476–500	12.50
176–200	7.50	501–525	12.75
201–225	7.75	526–550	13.00
226–250	8.00	551–575	13.50
251–275	9.00	576–600	13.75
276–300	9.25	601–up	*
301–325	9.75		

*Add $2.50 for each additional 100 page increment from 601 to 1,000 pages; add $4.50 for each additional 100 page increment over 1,000 pages.

LAWRENCE LIVERMORE LABORATORY
University of California Livermore California 94550

SAFETY ANALYSIS REPORT FOR PACKAGING: NEUTRON SHIPPING CASK, MODEL 0.5T

NOTICE

Contents

Abstract 1

1.0 Introduction 2

2.0 Package Description 4

2.1 General 4

2.2 Materials 7

2.2.1 Structural 7

2.2.2 Shielding 7

2.3 Fabrication Methods 10

2.3.1 Joining 10

2.3.2 Casting 10

2.4 Appurtenances 11

2.4.1 Cavity Drain 11

2.4.2 Pressure Relief 11

2.4.3 Lifting Devices 11

2.5 Closures 11

2.5.1 Cask 11

2.5.2 Capsule 12

3.0 Contents of Packaging 13

3.1 Designated Elements 13

3.2 Radioactive Decay Power 13

3.2.1 Alpha, Beta, and Electron Capture 13

3.2.2 Gamma Emission 15

3.2.3 Spontaneous Fission 16

3.3 Neutron Emission Rate 16

3.4 Gas Evolution 17

3.4.1 Fission Gases 17

3.4.2 Helium Gas Generation 17

3.5 Criticality 18

4.0 Evaluation 20

4.1 Thermal Analysis 20

4.1.1 Normal Conditions of Transport 20

4.1.2 Hypothetical Accident Conditions 25

4.1.3 Special-Form Capsule Heating Test 27

4.2 Structural Analysis 28
4.2.1 Load Resistance 28
4.2.2 Compression 29
4.2.3 External Pressure 30
4.2.4 Internal Pressure 32
4.2.5 Impact 37
4.2.6 Lifting Devices 44
4.2.7 Tiedown Device 53
4.2.8 Truck Transport Tiedown 60
4.3 Shielding Analysis 62
4.3.1 Normal Transport Conditions 62
4.3.2 Hypothetical Accident Conditions 64
5.0 Quality Assurance Program 66
5.1 Scope 66
5.2 Responsibilities 66
5.3 Fabrication and Acceptance Inspection 66
5.4 Reuse Inspection 67
5.5 Inspection Records 67
6.0 Loading and Handling Procedure 68
7.0 Compliance With Chapter 0529 69
7.1 Part I 69
7.2 Part II 69
7.3 Part III 72
7.4 Part IV 72
References 73
Appendix A. Chapter 0529 from Health and Safety Section of ERDA Manual. . A-1
Appendix B. Limits on Radioactive Materials B-1
Appendix C. List of Cask Drawings C-1
Appendix D. Tiedown Equipment Design Limits D-1
Appendix E. Sample Form for Reuse Inspection E-1
Appendix F. Sample Form for Loading and Handling Procedure F-1

SAFETY ANALYSIS REPORT FOR PACKAGING: NEUTRON SHIPPING CASK, MODEL 0.5T

Abstract

This Safety Analysis Report for Packaging demonstrates that the neutron shipping cask can safely transport, in solid or powder form, all isotopes of uranium, plutonium, americium, curium, berkelium, californium, einstelnium, and fermium. The report describes the cask and its contents. It also evaluates transport conditions, structural parameters (e.g., load resistance, pressure and impact effects, lifting and tiedown devices), and shielding. Finally, it discusses compliance with Chapter 0529 of the Energy Research & Development Administration Manual, Safety Standards for the Packaging of Fissile and Other Radioactive Materials.

1.0 Introduction

In 1968-1969, Lawrence Livermore Laboratory (LLL) designed and built two neutron shipping casks. Both served to safely ship neutron-emitting radioisotopes.

Some time later, a need arose to prepare a Safety Analysis Report for Packaging (SARP) for the cask. The Atomic Energy Commission requested such a SARP from LLL in 1974.

This report responds to that request. It fulfills the document requirements of Chapter 0529 of the Energy Research & Development Administration Manual, Safety Standards for the Packaging of Fissile and Other Radioactive Materials.*

What follows demonstrates that the neutron shipping cask can safely transport, in solid or powder form, all isotopes of uranium (U), plutonium (Pu), americium (Am), curium (Cm), berkelium (Bk), californium (Cf), einsteinium (Es), and fermium (Fm).

Radioactive materials to be shipped belong in the special-form transport group, type B quantity with a 5000 Ci limit. The transport index is 10.0.

Certain limits have been placed on shipments with this cask to meet the standards of Chapter 0529. These limits appear below along with section numbers for analyses in this report:

- Maximum power from radioactive decay not to exceed 100 W (Section 4.1.1).
- Total mass of any combination of the following fissile isotopes not to exceed 15.0 g (Section 3.5):

  ^{243}Cm, ^{245}Cm, ^{247}Cm, ^{249}Cf, ^{251}Cf, ^{242m}Am, ^{233}U, ^{235}U, ^{238}Pu, ^{239}Pu, and ^{241}Pu.
- Total mass of ^{251}Cf not to exceed 3.0 g (Section 3.5).
- Radiation dose rate at any point on the external surface of the shipping cask not to exceed 200 mrem/h (Section 4.3.1).

*See Appendix A for the complete text of Chapter 0529.

- Radiation dose rate at 91.4 cm from any accessible external surface of the shipping cask not to exceed 10 mrem/h (Section 4.3.1).
- Gas generation in special-form capsule not to exceed value given in Section 4.2.4.2.

Appendix B gives an example of the application of the limits.

2.0 Package Description

2.1 GENERAL

The neutron shipping cask is a right circular cylinder welded to a steel pallet (Fig. 1). The cavity for the special-form capsule occupies the cask's center while a long cylindrical plug closes the cavity's opening. Both plug and cask contain a gypsum-spodumene shielding composite.

A plate, bolted to the top of the cask with eight bolts, retains the plug and seals the cavity with an O-ring gasket. The plug has a mass of 18.0 kg (40 lb); total cask mass is 857 kg (1890 lb). A stainless steel plate, welded to the outer shell, identifies the cask as:

RADIOACTIVE MATERIAL
USA/6166/B (ERDA-SAN)
TARE WT. 1890 lbs. DRAWING #68-115679
RETURN CONTAINER TO:
LAWRENCE LIVERMORE LABORATORY
BLDG. 251, LIVERMORE, CALIFORNIA

The special-form capsule is the primary containment vessel for any radioisotope shipped with the cask. It is designed to be leak-tight under all normal transport and hypothetical accident conditions (listed in Appendix A). Figure 2 shows the capsule presently used. It is manufactured by Aeroquip Corporation* and employs a "Conoseal" gasket. It comes in four different sizes, any of which may be used. Capsules other than those described above may be used if they meet the "special-form" requirements of Chapter 0529 (Part I, A.15.b).

Appendix C contains a list of pertinent cask drawings.

*Reference to a company or product name does not imply approval or recommendation of the product by the University of California or the U.S. Energy Research & Development Administration to the exclusion of others that may be suitable.

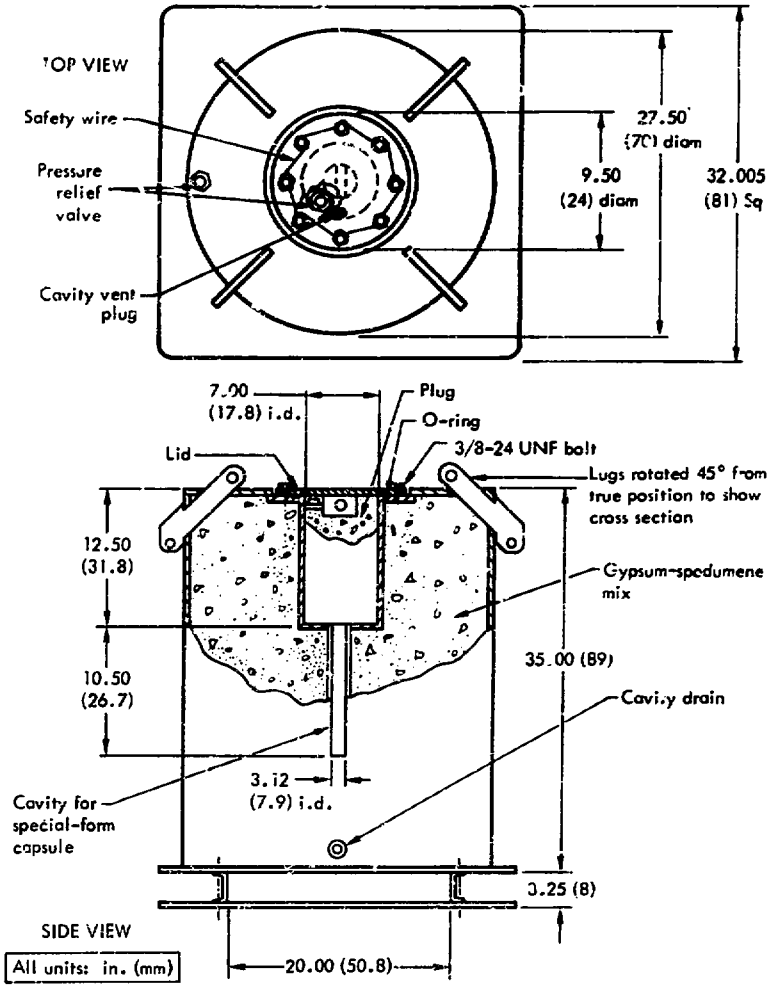

Fig. 1. Neutron shipping cask.

Part Number	A diam	B diam	C ref	D
MJN68462-1	1.345 (3.42)	1.600 (4.06)	2.98 (7.57)	2.3 (6.
-2	1.345 (3.42)	1.600 (4.06)	5.98 (15.19)	2.3 (6.
-3	1.750 (4.45)	2.000 (5.08)	7.73 (19.63)	2. (7.
MJN68462-4	0.600 (1.52)	1.000 (2.54)	8.00 (20.32)	1. (3.

All units: in. (cm)

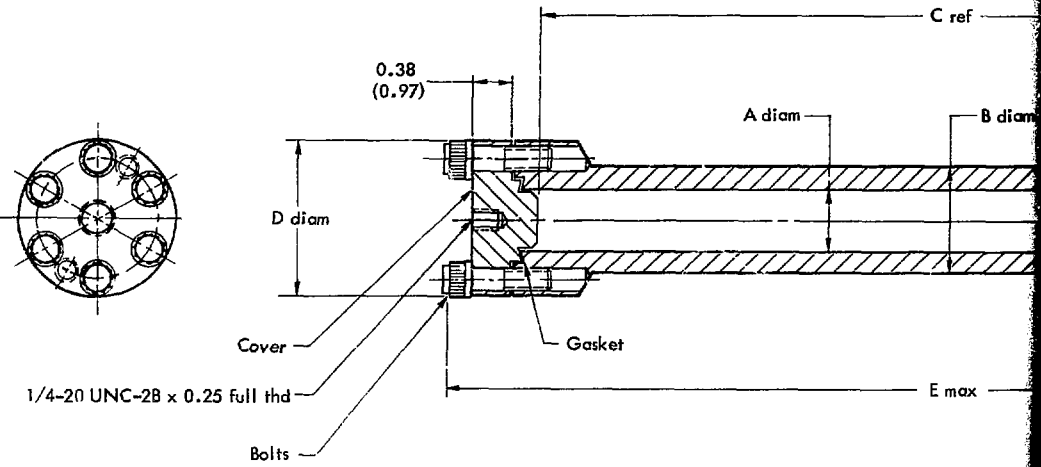

Fig. 2. Special-form capsule with "Conoseal" gasket.

B diam	C ref	D diam	E max	Internal volume, cm^3
1.600 (4.06)	2.98 (7.57)	2.370 (6.02)	5.00 (12.70)	69.4
1.600 (4.06)	5.98 (15.19)	2.370 (6.02)	8.00 (20.32)	139.3
2.000 (5.08)	7.73 (19.63)	2.960 (7.52)	10.25 (26.04)	304.7
1.000 (2.54)	8.00 (20.32)	1.438 (3.65)	9.75 (24.77)	37.1

All units: in. (cm)

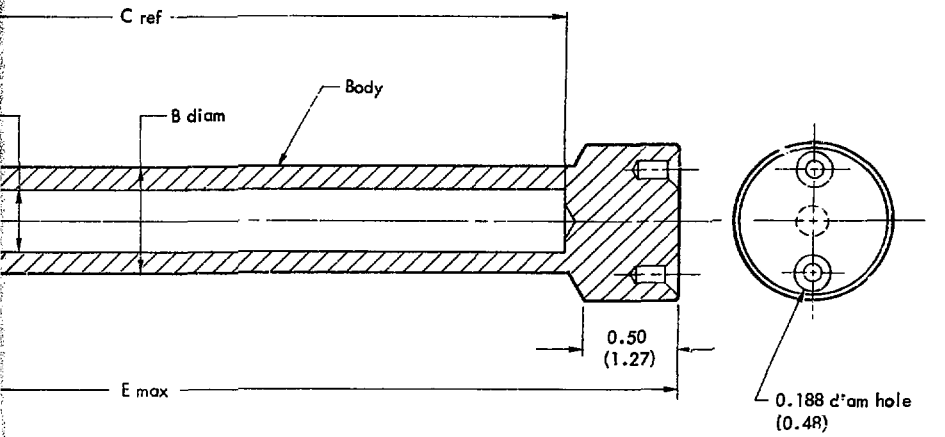

2

2.2 MATERIALS

2.2.1 Structural

Figure 3 arranges the material in the cask. Figure 2 shows the special-form capsule that occupies the centerline position. Table 1 lists the structural materials.

2.2.2 Shielding

The gypsum-spodumene composite combines two parts by mass gypsum ($CaSO_4 \cdot 1/2H_2O$), two parts spodumene ($LiAlSi_2O_6$), and one part water. The ingredients are mixed for 5 to 10 min in a plaster mixer, then poured. The resulting chemical reaction ($CaSO_4 \cdot 1/2H_2O + 3/2H_2O \rightarrow CaSO_4 \cdot 2H_2O$) is exothermic; the setting time is from 10 to 30 min, depending on the size of the pour. Excess water is trapped by the setting mixture into a homogeneous composite. The resulting solid strongly resembles gypsum wall plaster. Spodumene, which acts as an aggregate in the composite, is a water insoluble mineral of 200-mesh particle size, much like sand in texture and appearance.

The Physical Test Laboratory at Lawrence Livermore Laboratory (LLL) conducted tests of the gypsum-spodumene composite. The results, as reported in Engineering Test No. 4390, are:

- Density. 1920.0 kg/m^3 (120 lb/ft^3).
- Ultimate compressive strength. 3.2 MPa (458 psi).

  This was a test of four 2.5-cm diam by 8.9-cm-long specimens conducted on a 89.0-kN (10-ton) compression test machine with a 4.4-kN (1000-lb) load test cell.
- Modulus of Elasticity. 8.3 GPa (1.2×10^6 psi).

  This was a confined compression test of two 3.2-cm diam by 1.3-cm-long specimens conducted on a 534.0-kN (60-ton) compression test machine. Individual values were 8.3 GPa (1.2×10^6 psi) and 9.7 GPa (1.4×10^6 psi).
- Scratch Hardness. 83 S.

  Average of five specimens as determined by a Dietert No. 63 scratch hardness tester.

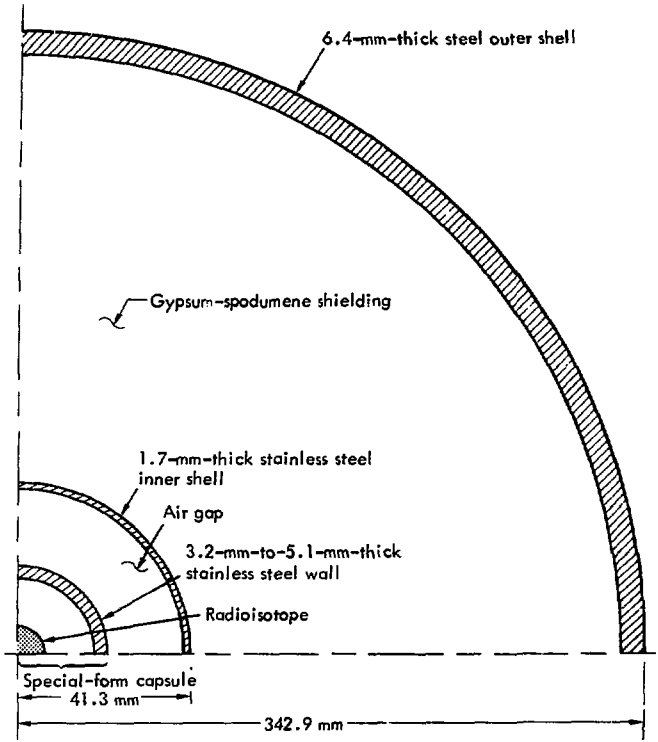

Fig. 3. Cross-sectional view of cask at its centerline.

The ability of the gypsum-spodumene composite to withstand freezing was demonstrated by twice chilling a specimen to 77 K (-320°F) with liquid nitrogen and warming it to room temperature. No cracking, crumbling, or other damage was evident.

Several samples of the composite were placed in 1089 K (1500°F) furnace for a 30 min period. The average mass loss was 20% (assumed to be caused by complete loss of water). The samples remained intact without any cracking or

Table 1. Structural materials.

Item	Material	Specification
Cask outer shell	Hot-rolled carbon steel	ASTM A7
Pallet base	Hot-rolled carbon steel	ASTM A7
Cask inner shell	Type 321 stainless steel	ASTM A269 & QQ-S-766C
Cask base and top	Hot-rolled carbon steel	ASTM A7
Lifting & tiedown lugs	Type-304 stainless steel	ASTM A240
Cask plug	Type-321 stainless steel	QQ-S-763 b & c
Cask lid	Type-304 stainless steel	QQ-A-766C
Cask bolting	Type-302 stainless steel	Aircraft-Type Cap Screw
Special-form capsule body	Type-347 stainless steel	ASTM A276
Special-form capsule cover	Type-347 stainless steel	ASTM A276
Special-form capsule gasket	Annealed, pickled & cold-rolled stainless steel	MIL-S-6721 A, Composition Ti
Special-form capsule bolting	Iron-base, high-strength stainless alloy A-286	MIL-S-8879

disintegration. At 401 K (262°F), the gypsum will dehydrate, reverting to its original semihydrated form ($CaSO_4 \cdot 1/2H_2O$). At 436 K (325°F), all water is driven off.

No thermal properties tests were conducted on the composite. The values used in the calculations are based on similar materials. Table 2 lists the thermal properties found in the literature.

The values used in the calculations were:

- Thermal conductivity. 75% of listed values for spodumene.
- Specific Heat. Constant at 921.0 J/kg • K (0.22 Btu/lb-°F)

Table 2. Thermal properties of shielding components.

Material	Density (kg/m^3)	Temperature (K)	Thermal conductivity ($W/m^2 \cdot K$)	Linear thermal expansion (%)	Specific heat ($J/kg \cdot K$)
Spodumene[1]	2130	278	3.12	0	--
	--	444	3.58	-1.0	--
	--	611	3.97	-6.5	--
	--	778	4.26	-12.0	--
	--	889	--	-14.0 Min	--
	--	944	4.49	-13.0	--
	--	1111	4.54	0	--
Gypsum plaster[2]	2114	348	2.44	--	--
Gypsum sand plaster[3]	1794	294	2.38	--	921

2.3 FABRICATION METHODS

2.3.1 Joining

The cask structure was fabricated by shielded metal-arc and/or gas tungsten-arc welding techniques. The electrode for the carbon steel welds was typically American Welding Society (AWS) Classification E 60 (50,000 psi minimum yield point). The filler metal for the austenetic stainless steel-to-carbon steel welds was typically AWS Classification ER 309 (80,000 psi min tensile strength). The electrodes for the welds between the various types of austenetic stainless steel have a 80,000 psi min tensile strength.

2.3.2 Casting

The shielding material combines two parts by mass spodumene (ceramic grade, 200-mesh size), two parts by mass gypsum (casting type, 30 min set time), and one part by mass tap water. It is thoroughly mixed before pouring; the container is vibrated as it receives the pour to eliminate voids.

The shielding cavity of the cask has numerous hook-shaped bars and a wire-mesh screen to secure the gypsum-spodumene composite in place.

2.4 APPURTENANCES

2.4.1 Cavity Drain

A 1/8-in. schedule (SCH) 40 stainless steel pipe forms the cavity drain. It is routed from cavity bottom to cask side to avoid any radiation leak. The line is welded to the shell at both ends and cast in place by the shielding. A 1/8-in. pipe plug seals the drain.

2.4.2 Pressure Relief

The cavities containing the shielding composite are provided with relief valves for overpressure protection. The valves have brass bodies and are set to lift at 69.0 kPa (10 psi). The valve for the plug is mounted in a well at the top. Its recessed location affords protection from accidental damage.

The valve on the cask body is also recessed. Because of the large volume of gypsum-spodumene in the cask body, a gas-collection channel is built into the cask. The passageway for gases is a triangular-shaped area formed by a 1/8-in. × 1/2-in. × 1/2-in. steel angle joined to the cask side, bottom, and top. The flow area is equivalent to a 7.6-mm (0.30-in.) i.d. tube.

2.4.3 Lifting Devices

Besides the pallet-type base, there are four lifting lugs at the cask top. They have separate holes for use as tiedown points during shipping. The lugs are welded to both the cask outer shell and top plate. The holes in the lugs for lifting will accommodate shackles with up to a 1.9-cm (3/4-in.) diam pin. The holes for tiedown will accommodate shackles with a 1.3-cm (1/2-in.) diam pin maximum.

The plug can be lifted by the 1.3-cm diam stainless steel rod in the recessed hole in the plug top.

2.5 CLOSURES

2.5.1. Cask

The cask plug and contents (special-form capsule) are held in the cask cavity by a lid. The lid is secured to the cask body with eight 3/8-24 Unified National Fine (UNF) bolts. There is an O-ring seal between the cask and lid. The seal serves only to keep dirt from entering the cask cavity.

2.5.2 Capsule

The special-form capsule is the containment vessel for radioactive materials. The capsule and its "Conoseal" gasket are designed for a pressure of 1034.0 kPa (150 psig) at 1089 K (1500°F). They have an operating temperature range of 5 K (-450°F) to 1089 K. The capsule is tested at an internal pressure of 276.0 kPa (40 psi) and 1089 K. To be acceptable, it must have no indication of leakage when checked with a helium mass spectrometer having a sensitivity of 1×10^{-9} std cm^3/s.

The metal gasket, resembling a Belleville washer, is completely enclosed by the flanges. As the cover bolts are tightened, the conical gasket is flattened. At the same time it is compressed radially and axially. When the bolts have been torqued to their recommended value, the gasket material has been stressed beyond its yield point and is completely confined and compressed.

3.0 Contents of Packaging

3.1 DESIGNATED ELEMENTS

The shipping cask shall transport all the isotopes of uranium, plutonium, americium, curium, berkelium, californium, einsteinium, and fermium. The material shall be in a dry solid or powder form.

3.2 RADIOACTIVE DECAY POWER

Exothermic decay reactions create the power in a radioisotope. It is the product of the decay rate and the energy associated with each decay reaction. Table 3 lists radioisotopes normally encountered when using the cask. They are produced by a (n, γ) reaction, multiple neutron capture, or decay. The following sections describe the equations and assumptions used to determine the table values. Appendix B provides an example of the use of the equations and Table 3.

3.2.1 Alpha, Beta, and Electron Capture

The decay rate $R_{(t)}$ is the product of the decay constant (λ) and the number of atoms present (N):

$$R_{(t)} = \lambda \cdot N \quad \text{(in dis/s)},$$

where $$\lambda = \frac{\ln 2}{T_{1/2}} \quad (\text{in } s^{-1}),$$

$$N = \frac{B \cdot G}{A} \left(e^{-\lambda t}\right),$$

$T_{1/2}$ = half-life (s),

B = Avogadro's number
= 6.023×10^{23} atoms/g-mol,

A = atomic weight (amu),

G = sample mass (g), and

t = elapsed time between when G is measured or calculated and sample inserted into cask (s).

Table 3. Significant radioisotopes.

Isotope	Half-life[4] Total	Half-life[4] Spontaneous fission	Maximum decay power (W/g)	Maximum gas generation rate ($cm^3/g \cdot s$)	Specific neutron emission rate[5] (neutrons/g·s)
Am-241	458y	--	0.11	0.44×10^{-8}	--
Am-242m	152y	--	<0.01	--	--
Am-243	7.95×10^3y	--	<0.01	--	--
Cm-242	162.5d	7.2×10^6y	122.4	457×10^{-8}	1.8×10^7
Cm-243	32y	--	1.68	6.33×10^{-8}	---
Cm-244	17.6y	1.31×10^7y	2.92	11.47×10^{-8}	1.17×10^7
Cm-245	9.3×10^3y	--	<0.01	--	--
Cm-246	5.5×10^3y	1.7×10^7y	<0.01	--	9.5×10^6
Cm-247	1.6×10^7y	--	<0.01	--	--
Cm-248	4.7×10^5y	4.6×10^6y	--	--	3.4×10^6
Cm-250	--	1.7×10^4y	0.10	--	9.3×10^9
Bk-249	314d	6×10^8y	1.24	--	3.3×10^5
Cf-249	360y	1.5×10^9y	0.13	0.47×10^{-8}	1.1×10^5
Cf-250	13.2y	1.7×10^4y	4.04	14.92×10^{-8}	9.3×10^9
Cf-251	800y	--	0.06	0.25×10^{-8}	--
Cf-252	2.646y	85y	39.02	72.23×10^{-8}	2.32×10^{12}
Cf-253	17.6d	--	46.48	--	--
Es-253	20.47d	6.4×10^5y	907.9	3123×10^{-8}	2.4×10^8
Es-254	276d	7×10^5y	68.03	238.4×10^{-8}	2.2×10^8
Es-255	38.3d	>170y	91.94	156.4×10^{-8}	$>9.1 \times 10^{11}$
Fm-254	Not used	246d	2482	75.72×10^{-8}	3.34×10^{14}
Fm-257	80d	100y	259.8	820.6×10^{-8}	1.62×10^{12}

The decay rate becomes

$$R_{(t)} = 4.175 \times 10^{23} \left(\frac{G}{A \cdot T_{1/2}}\right) \left(e^{-0.693t/T_{1/2}}\right) .$$

Table 3, assumes that t is small relative to $T_{1/2}$; hence $e^{-0.693t/T_{1/2}} \approx 1.0$. This results in the maximum decay rate. For some unlisted radioisotopes, it may be advantageous to disregard the above assumption as it can lead to a gross overestimation of decay power.

The total energy released per decay (E) is determined by summing the energy release (Q) and intensity (F) for each decay scheme. For instance, ^{255}Es decays 8.5% of the time by α emission with a Q value of 6.8 MeV. There is also β emission that occurs 91.5% of the time with a Q value of 0.5 MeV. The total energy release per decay in this case is

$$E = F_\alpha \cdot Q_\alpha + F_\beta \cdot Q_\beta$$

$$= 0.085 \times 6.8 + 0.915 \times 0.5$$

$$= 1.036 \text{ MeV}.$$

The power generation is

$$P = K \cdot R_{(t)} \cdot E \quad \text{(in W)},$$

where K = conversion factor

$$= 1.6022 \times 10^{-13} \ \frac{W \cdot S}{MeV} \text{ ; thus}$$

$$P = 6.69 \times 10^{10} \left(\frac{G \cdot E}{A \cdot T_{1/2}}\right) .$$

3.2.2 Gamma Emission

Gamma emission accompanies most, if not all, alpha decay. The gamma decay power is calculated in the same manner as alpha decay. In the majority of cases, the sum of the products of the gamma energy and intensity is small; thus gamma power may be neglected.

3.2.3 Spontaneous Fission

The energy release from spontaneous fission is assumed to be 200 MeV, equal to that from induced fission of ^{235}U and/or ^{239}Pu. Also, the conservative supposition is made that the 200 MeV is deposited totally within the sample. The power from spontaneous fission, where E has been replaced by 200 MeV and $T_{1/2}$ has been replaced by T_{SF} (the spontaneous fission half-life) is

$$P_{SF} = 1.34 \times 10^{13} \frac{G}{A \cdot T_{SF}} \quad \text{(in W)},$$

where T_{SF} = spontaneous fission half life (in s).

3.3 NEUTRON EMISSION RATE

The neutron emission rate is required for the shielding calculations. Neutrons, which result from spontaneous fission, may be calculated by

$$\Phi = \text{spontaneous fission rate} \times \text{neutrons emitted per fission.}$$

The spontaneous fission rate per second is expressed in the same manner as the decay rate.

$$\lambda \cdot N = \left(\frac{0.693}{T_{SF}}\right)\left(\frac{6.023 \times 10^{23} G}{A}\right) \quad \text{(in fission/s)},$$

where T_{SF} = spontaneous fission half-life (in s).

The neutrons emitted per fission (ν) can be found in the literature. One available source is Ref. 5. In the absence of definite data, a conservative value is 4.0. The neutron emission rate is

$$\Phi = 4.175 \times 10^{23} \frac{G \cdot \nu}{A \cdot T_{SF}} \quad \text{(in neutrons/s)}.$$

Table 3 lists the specific neutron emission rate for isotopes normally encountered in the use of the cask. Appendix B has an example of the use of the above expression and Table 3.

3.4 GAS EVOLUTION

3.4.1 Fission Gases

The radioactive sample will evolve gases as a result of spontaneous fission and alpha decay. Assuming that the spontaneous fission product distribution is the same as that of induced fission of ^{235}U, there are produced 5.18 atoms of krypton (Kr) and 21.25 atoms of xenon (Xe) per 100 atoms of ^{235}U fissioned.[6] This data is for thermal fission of ^{235}U irradiated for 135 days with zero days cooling. The volume of gas evolved per fission is

$$V = \left(\frac{22\ 400\ \text{cm}^3\ \text{of gas}}{\text{mol of gas}}\right)\left(\frac{\text{mol of gas}}{6.023 \times 10^{23}\ \text{gas atoms}}\right)\left(\frac{0.2643\ \text{gas atoms}}{\text{fission}}\right)$$

$$= 9.830 \times 10^{-21}\ \text{cm}^3/\text{fission}.$$

The rate of spontaneous fission, found in Section 3.3, is

$$\lambda \cdot N = 4.175 \times 10^{23}\left(\frac{G}{A \cdot T_{SF}}\right) \quad (\text{in fission/s}).$$

The volume generation rate is therefore

$$V_{SF} = V \cdot \lambda \cdot N$$

$$= 4104\left(\frac{G}{A \cdot T_{SF}}\right) \quad (\text{in cm}^3/\text{s}),$$

where the symbols are defined as before.

It is possible, though highly improbable, that fission gas buildup could be of consequence. Most of the radioisotopes in this report have spontaneous fission half-lives of years. It would require a rare combination of short spontaneous fission half-life, large amount of isotope, and long time in the capsule to generate a significant volume of fission gas.

3.4.2 Helium Gas Generation

Helium gas evolves from alpha decay. The quantity produced depends on the decay rate and yield of alpha particles per disintegration. Section 3.2.1 indicates the decay rate. The yield of alpha particles is the sum of the

intensities. In some cases it is 100% or 1.0, but it is frequently less. The helium volume generation rate is

$$V_{He} = V \cdot \lambda \cdot N$$

$$= \left(\frac{22\ 400\ cm^3}{mol\ of\ gas}\right)\left(\frac{mol\ of\ gas}{6.023 \times 10^{23}\ atoms}\right)\left(\frac{F\ helium\ atoms}{disintegration}\right)$$

$$\left(4.175 \times 10^{23}\right)\left(\frac{G}{A \cdot T_{1/2}}\right)$$

$$= 15\ 527 \left(\frac{G \cdot F}{A \cdot T_{1/2}}\right) \quad (\text{in } cm^3/s),$$

where, as before

G = mass of isotope (g),

F = intensity expressed as fraction,

A = atomic mass (amu), and

$T_{1/2}$ = half-life for alpha decay (s).

3.5 CRITICALITY

The cask can safely transport certain fissile isotopes. They are ^{242m}Am, ^{243}Cm, ^{245}Cm, ^{247}Cm, ^{249}Cf, ^{251}Cf, ^{233}U, ^{235}U, ^{238}Pu, ^{239}Pu, and ^{241}Pu. The total combined mass of these isotopes shall not exceed 15 g. An added restriction is a mass limit of 3 g on the isotope ^{251}Cf.

Table 4 tabulates the critical masses for the isotopes.[7] It also lists LLL limits set for the dry solid isotopes to be shipped in the cask. In no case is there a danger of attaining critical mass within LLL limits. An added margin of safety is present because the isotopes shipped will be dry whereas the listed data are for metal-water solutions.

Table 4. Critical masses of fissile isotopes.

Isotope	Calculated critical mass[a] (g)	Assigned cask limit (g)
^{242m}Am	23	
^{243}Cm	213	
^{245}Cm	42	
^{247}Cm	159	
^{249}Cf	32	Total mass of any combination not to exceed 15g.
^{233}U	590	
^{235}U	820	
^{238}Pu	4500[b]	
^{239}Pu	530	
^{241}Pu	260	
^{251}Cf	10	3

[a]Critical mass of solution sphere at optimum moderation, water-reflected.

[b]Critical mass of metal sphere in fast, unmoderated system, steel-reflected.

4.0 Evaluation

4.1 THERMAL ANALYSIS

4.1.1 Normal Conditions of Transport

Case 1. The normal conditions of transport appear in Annex 1 of Appendix A as "Direct sunlight at an ambient temperature of 130°F (328 K) in still air." According to Ref. 8, part 173.393 (e) (2), General Packaging Requirements, "If the package is transported in a transport vehicle consigned for the sole use of the consignor, the maximum accessible external surface temperature shall be 180°F" (356 K).

Case 2. A second "normal" condition of transport is found in the same paragraph of Ref. 8: "The temperature of the accessible external surfaces of the package will not exceed 122°F (323 K) in the shade when fully loaded, assuming still air at ambient temperature." An ambient temperature of 311 K (100°F) will be assumed for this case.

Another restriction that applies to this cask design places a limit of 401 K (262°F) on the maximum temperature of the gypsum-spodumene composite. The reason is that it would be undesirable to let the gypsum exceed its dehydration temperature and form the hemihydrate.

4.1.1.1 Solar Power Load

The solar power load (P_S) must be determined for case 1. It can be calculated as follows:

$$P_S = \alpha A I \quad \text{(in W)},$$

where α = total solar absorptivity of surface,
A = area exposed to solar radiation (m^2), and
I = incident solar power intensity (W/m^2).

Reference 9 lists the solar absorptivity of type 301 stainless steel as

α = 0.37 (polished)
= 0.43 (as received material)
= 0.52 (clean and smooth)

The chemical composition of type 304 stainless steel (used for the lid) is very similar to that of type 301. Therefore, one of the above solar

absorptivities will be used. Since the lid will be neither polished nor clean and smooth during use, the "as received" value seems to best approximate the lid absorptivity and will be used in the calculations. Solar absorptivity for the white epoxy paint used on all carbon steel surfaces is estimated from data in Ref. 10:

α = 0.16 (white Y_2O_3)
= 0.18 (" ZnO)
= 0.15 (" CaO)
= 0.15 (" $MgCO_3$)
= 0.14 (" ZrO_2)
= 0.14 (" ThO_2)
= 0.14 (" MgO)
= 0.12 (" $PbCO_3$)

The actual type of pigment used in the paint was unavailable so α was assumed to be 0.16. The painted surface will be maintained in good condition by cleaning and repainting at appropriate intervals. The incident solar power intensity as a function of time is taken from Ref. 11. The data represent summer solar radiation striking walls and roofs at a latitude of 35°N. The maximum intensity listed occurs at this location.

The wall data are for the eight major points of the compass (east, southeast, south, etc.). Therefore, the vertical cylindrical shell of the cask was considered to be an octagon. Intensities were summed and an average uniform intensity was determined for each hour. Figures 4 and 5 plot the solar intensity on horizontal and vertical cylindrical surfaces. The curves were not smoothed to facilitate later calculations. The assumption of an average vertical intensity is valid considering the relative thermal conductivities of the steel shell and gypsum-spodumene mixture. The incident solar power load can more easily move circumferentially than radially.

4.1.1.2 Heat Losses to Environment

Heat losses to the environment are based on the cask surface temperature. The analysis includes both convection and radiation heat losses.

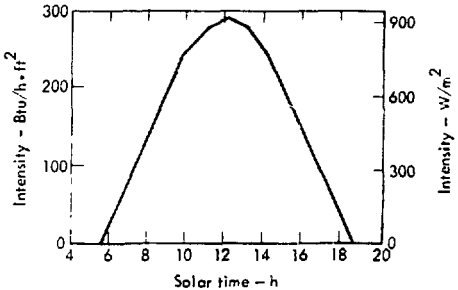

Fig. 4. Solar intensity on horizontal cylindrical surface.

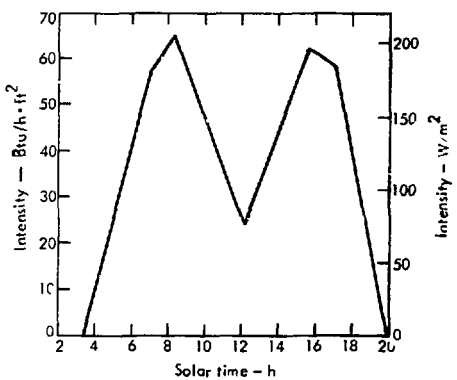

Fig. 5. Average solar intensity on vertical cylindrical surface.

Convection heat transfer coefficients are determined from equations given by McAdams,[2] pp. 172-181:

Vertical cylinder	Horizontal plate
Laminar: $h_c = 0.29\left(\frac{\Delta T}{H}\right)^{0.25}$	$h_c = 0.27\left(\frac{\Delta T}{D}\right)^{0.25}$
Turbulent: $h_c = 0.19(\Delta T)^{0.333}$	$h_c = 0.22(\Delta T)^{0.333}$

where

h_c = convection heat transfer coefficient Btu/hr-ft^2-°F,

ΔT = temperature difference between surface and air (°F),

H = height of cylinder (ft), and

D = diameter of cylinder top (ft).

These equations can be converted to SI* units by use of conversion factors.

The equations for laminar flow apply where the Rayleigh Number is between 10^4 and 10^9. Calculation of this modulus indicates the flow is laminar except during the fire test where turbulent flow occurs.

The convection heat transfer is

$$q = h_c A (\Delta T),$$

where q = power (W),

A = respective area (m^2),

ΔT = temperature difference between surface and air (K), and

h_c = W/m^2 · K.

The radiation heat transfer is determined from

$$q = \sigma F A (T_2^4 - T_1^4),$$

where σ = Stefan-Boltzman constant

= $5.669 \cdot 10^{-8}$ W/m^2 · K^4,

F = radiation form-factor for cask in large space

= ϵ_2,

ϵ_2 = 0.96 (white zinc oxide paint[10]),

ϵ_2 = 0.32 (304 stainless steel[9]),

A = respective area (m^2),

T_2 = cask surface temperature (K), and

T_1 = temperature of surroundings (K).

*Le Système International d'Unités (the International System of Units).

4.1.1.3 Thermal Response

A heat balance for the cask was made under case 1 and 2 conditions. The unknown was the allowable radioactive decay power. An overriding restriction was a maximum temperature of 401 K for the gypsum-spodumene composite.

The calculations were made using TRUMP[12] in the standard form. This is a computer program for transient and steady-state temperature distributions in multidimensional systems. TRUMP solves a general nonlinear parabolic partial differential equation describing flow in various kinds of potential fields such as temperature. Steady-state and transient flow in one, two, or three dimensions are considered in geometrical configurations having simple or complex shapes and structures. Initial conditions may vary with spatial position. Material properties, source and sink strengths, boundary conditions, and other problem parameters may vary with spatial position, time, or the primary dependent variable-temperature. External sources or sinks, coupled to the system by means of specified boundary conditions, may vary with time.

Radioactive decay power was assumed to be uniformly distributed over the cask cavity surface. This is a conservative approach for neutron and/or gamma emitters because some of this power would be deposited in the shielding.

Section 2.2.2 noted the thermal conductivity and specific heat values used for the gypsum-spodumene composite. The calculations ignore the higher thermal conductivity and lower specific heat of the steel shell. The overall effect of this omission is to overestimate the temperature difference; hence, it is conservative.

The cask was cross-sectioned vertically and divided into 30 approximately equal nodes 15-cm-long by 5-cm-wide. The cask bottom surface was assumed to be an insulated boundary.

Case 1. A radioactive decay power of 100 W was assumed and the cask steady-state temperature distribution for an ambient temperature of 295 K was found. This temperature distribution served as the starting point for case 1 conditions. The solar power load as a function of time was applied per Figs. 4 and 5. An ambient temperature as a function of time was likewise imposed. The temperature curve came about in the following manner. Temperature data for the Nevada Test Site (NTS) was examined to find the maximum recorded profile.[13] For Station BJY, located near the center of the Yucca Flat area at NTS, the temperature reached a maximum of 318 K (112°F) during the period 6/14/57 to 7/31/64. By adding 10 K (18°F) to the listed data, a day with a 130°F ambient temperature was obtained (Fig. 6).

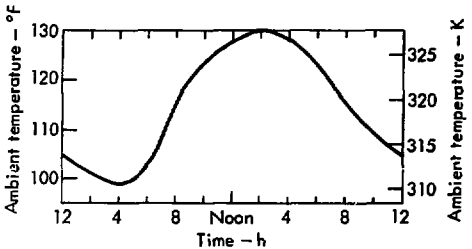

Fig. 6. Ambient temperature profile for cask (based on data recorded at Nevada Test Site).

The results of the TRUMP calculation indicate a maximum internal temperature of 400 K and maximum surface temperature of 329 K. These maxima fall below the allowables listed.

Case 2. Radioactive decay power is again 100 W. The ambient temperature stays constant at 311 K. The maximum steady state temperatures come to 400 K (internal) and 319 K (surface); both are acceptable.

4.1.2 Hypothetical Accident Conditions

Annex 2 (in Appendix A) states the thermal conditions the cask must withstand: "Exposure to a thermal test in which the heat input to the package is not less than that which would result from exposure of the whole package to a radiation environment of 1475°F for 30 minutes with an emissivity coefficient of 0.9, assuming the surfaces of the package have an absorption coefficient of 0.8. The package shall not be cooled artificially until 3 hours after the test period unless it can be shown that the temperature on the inside of the package has begun to fall in less than 3 hours."

The initial temperature distribution at the start of the thermal test is that which existed at the end of the case 2 conditions (Section 4.1.1). The solar power load is not applied during this test. The radiation form factor for the test is

$$F = \left(\frac{1}{\varepsilon_2} + \frac{1}{\varepsilon_1} - 1\right)^{-1} ,$$

where $\varepsilon_2 = 0.9$,

$\varepsilon_1 = 0.8$, and

$F = 0.735$.

The temperature profiles at the horizontal centerline of the cask are shown in Fig. 7 for the thermal test. One curve shows the resultant profile after 30 min at 1075 K. The second curve indicates the profile 3 h after the end of the 1075 K exposure.

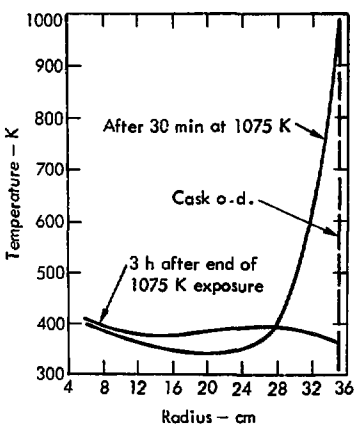

Fig. 7. Temperature profile at horizontal centerline of cask.

Examination of the curves indicates the following points:

- The thermal test has a negligible effect on the special-form capsule thermal environment.
- Dehydration of the shielding composite occurs beyond a radius of 28 cm during the 1075 K exposure.
- If artificial cooling is not commenced until 3 h after the 1075 K exposure, there will be partial dehydration of the shielding composite out to a radius of 8 cm.

The computer results also show that dehydration at the inner radius does not start until 1 h after the end of the 1075 K exposure. If artificial cooling was initiated at that time or earlier, this dehydration could be eliminated.

4.1.3 Special-Form Capsule Heating Test

Annex 4 of Appendix A states that special-form capsules must retain their contents when heated in air to a temperature of 1075 K (1475°F). They must remain at that temperature for 10 min. Accordingly, capsules assembled with helium in the cavity have been heated to 1089 K (1500°F) in an oven. They were allowed to soak for 15 min, then removed. During and after cooling to room temperature they were leak-checked. They showed no indication of leakage when checked with a helium mass spectrometer having a sensitivity of 1×10^{-9} std cm^3/s.

The maximum temperature the capsule would experience during the hypothetical accident condition is determined below:

$$q = \sigma F A_1 (T_1^4 - T_2^4) ,$$

$$q = 100 \text{ W},$$

A_1 = surface area of smallest capsule in Fig. 2.
= 208 cm^2,

A_2 = surface area of cask cavity
= 763 cm^2,

T_2 = 410.6 K (from TRUMP results),

$$F = \left[\frac{1}{\varepsilon_1} + \frac{A_1}{A_2}\left(\frac{1}{\varepsilon_2} - 1\right)\right]^{-1}$$

$$= \left[\frac{1}{0.32} + \frac{208}{763}\left(\frac{1}{0.32} - 1\right)\right]^{-1}$$

$$= 0.27, \text{ and}$$

$$T_1 = \left[410.6^4 + \frac{100}{(5.67 \times 10^{-8})(0.27)(0.0208)}\right]^{0.25}$$

$$= 765 \text{ K } (917°\text{F}).$$

As can be seen, this temperature is 324 K below the temperature the capsule was actually tested at. Also, this analysis ignores any heat transferred by conduction and convection from the capsule to the cask cavity.

4.2 STRUCTURAL ANALYSIS

4.2.1 Load Resistance

When regarded as a simple beam supported at its ends along any major axis, the shipping container must be capable of withstanding a static load, normal to and uniformly distributed along its length, equal to five times the fully loaded container weight. Stresses should not be generated in any material of the container beyond the yield strength of that material.

Figure 1 shows the cask. The cask outer shell is American Society for Testing Materials (ASTM) A7 carbon steel with a minimum specified yield strength of 228.0 MPa (33,000 psi). The maximum weight of the cask is 8407 N. Stresses in the cask resulting from the uniform load are determined, as recommended by Shappert,[14] from the following equation:

$$S = \frac{M}{Z},$$

where

S = stress (Pa),

M = maximum bending moment of cask = $\frac{5WL}{8}$,

Z = section modulus of cask = $\pi R_o^2 t$ (for a large-diameter, thin-walled cylinder),

W = weight of cask = 8407 N,

L = length of cask = 89.0 cm,

R_o = outside radius of cask = 35.0 cm, and

t = thickness of cask wall = 0.64 cm.

The computed maximum bending moment is

$$M = \frac{5\ (8407)\ (0.89)}{8} = 4676\ N \cdot m\ .$$

The computed section modulus is

$$Z = \pi R_o^{\ 2}\ t = \pi\ (35)^2\ (0.64) = 2.43 \times 10^{-3}\ m^3\ .$$

The maximum bending stress is then

$$S_{max} = \frac{4676}{2.43 \times 10^{-3}} = 1.92\ MPa\ (280\ psi).$$

Since this stress value is less than 1% of the material yield stress of 228.0 MPa, the cask satisfies the load resistance requirements.

4.2.2 Compression

This test requires a compressive load equal to either five times the weight of the package or 13.8 kPa (2 psi) multiplied by the maximum horizontal cross section of the package, whichever is greater. The load must be applied over a period of 24 h, uniformly against the top and bottom of the package in the position in which the package would normally be transported.

Calculations are based on a load of 42.26 kN (9500 lb), which is five times the maximum gross weight since this is the higher loading. To calculate longitudinal compressive stress, divide the load by the cross sectional area of the cask wall:

$$S = \frac{L}{\pi D t}$$

$$= \frac{42.26}{\pi\ (70)(0.64)}$$

$$= 3.03\ MPa\ (440\ psi).$$

This stress value is only slightly greater than 1% of the shell yield stress.

The critical buckling stress (S_{cr}) of the cylindrical shell, when subjected to uniform axial compression, is calculated[15] to determine the ultimate capability of the cask:

$$S_{cr} = \frac{Eh}{R\sqrt{3(1-\mu^2)}},$$

where

E = modulus of elasticity = 207 GPa,

h = cask thickness = 0.64 cm,

R = radius of cask = 35 cm, and

μ = Poisson's ratio = 0.3.

Thus

$$S_{cr} = \frac{207 \times 10^6 \ (0.64)}{35\sqrt{3(1 - 0.3^2)}} = 2.28 \text{ GPa } (330{,}000 \text{ psi}).$$

This value for the ultimate capability is 750 times greater than the longitudinal compressive stress in the cask calculated above. Thus, placing a 42.26 kN load on the top of the cask would have no effect.

4.2.3 External Pressure

The containment vessel shall be capable of withstanding an external pressure of 172 kPa (25 psi) with no loss of contents.

The cask outer shell is supported everywhere by internal shielding material. However, by ignoring this support and assuming an empty shell, the maximum bending stresses in the cask lid and the bottom end plate can be determined. The calculation for the bottom end plate does not take into account the tremendous stiffening effect provided by the pallet base. Section 4.2.4 contains the calculation for the cask top end plate.

The lid and bottom end plate are assumed to have fixed edges by virtue of the bolting in one case and the head-to-shell weld in the other case.

$$S = \frac{0.75\ R^2 P}{h^2}, \quad \text{(Ref. 15)}$$

where

S = maximum bending stress (Pa),

R = radii of plate or bolt circle = 10.8 cm, 35.0 cm,

h = thicknesses of plates = 1.6 cm, 0.95 cm, and

P = pressure = 172 kPa.

Thus

$$S_{LID} = \frac{0.75\ (10.8)^2(172)}{1.6^2}$$

$$= 6.0 \text{ MPa},$$

and

$$S_{BOTTOM} = \frac{0.75(35)^2(172)}{0.95^2}$$

$$= 173.8 \text{ MPa}.$$

The maximum bending stress in the lid is 4% of the minimum yield strength for 304 stainless steel (207 MPa) and the bottom plate maximum stress is 76% of the yield strength for ASTM A7 carbon steel (228 MPa).

The maximum membrane stress in the cask body is the hoop stress expressed as

$$S_{max} = \frac{PR}{T},$$

where

S_{max} = maximum hoop stress (Pa),

P = pressure = 172 kPa,

R = radius of body = 35.0 cm, and

T = body wall thickness = 0.64 cm.

Therefore

$$S_{max} = \frac{172(35)}{0.64} = 9.48 \text{ MPa}.$$

This value is only 4% of the yield stress.

The third consideration is buckling strength. Cask body buckling strength can be determined by using procedures specified in the American Society of Mechanical Engineers (ASME) Pressure Vessel Code, Section VIII,[16] which provides a value for critical pressure.

This ASME code states that the allowable external pressure has the expression

$$P_{allowable} = \frac{B}{D/t},$$

where

$P_{allowable}$ = the allowable pressure load of the vessel (psi),

D = diameter of vessel = 27.5 in.,

t = thickness of vessel = 0.25 in.

B = constant depending on the ratios D/t and L/D (where L = length of vessel)
= 13,000.

For the cask shell the allowable pressure load is

$$P_{allowable} = \frac{13,000}{27.5/0.25} = 118 \text{ psi} = 814 \text{ kPa}.$$

The allowable external pressure is much greater than the required evaluation pressure of 172 kPa. Note again that this ignores the fact that the shell is supported internally by the shielding composite.

4.2.4 Internal Pressure

4.2.4.1 Cask

The space inside the walls of the cask and plug bodies is filled with the gypsum-spodumene shielding composite. Assuming a fire or other source of heat, the temperature of the shielding composite can be raised to a point where it decomposes. The normal process would be the release of water of hydration from the gypsum beginning at 401 K (262°F). This released water would appear as steam in the shielding space and cause a pressure increase. To preclude the pressure from rising to a point where rupture of the cask or plug could occur, both are equipped with relief valves that lift at 69 kPa

(10 psi). Hence the shielding volumes will be able to vent as the temperature rises above the saturation temperature of 388 K (239°F).

The cask cavity is also protected against pressure buildup. The lid that covers the cask cavity has a sintered metal plug installed in it. This prevents dirt from entering the cavity but allows pressure to vent.

Evaluation of the internal pressure capability appears below. This analysis ignores the devices that prevent pressure buildup from occurring. The components analyzed are:

- Cask outer cylindrical shell.
- Cask top plate.
- Cask inner cylindrical shell.

In the analysis, the cask top plate is considered a circular plate with a circular hole. Both edges are supported and fixed. The pressure acts on the entire surface. The weld at the shell-head junction justifies the assumed outer edge boundary condition. The second boundary condition is based on the fact that the center portion of the top plate is stiffened by 1.9-cm-thick by 33-cm-diam plate. Also, the inner shell of the cask is welded to the top plate. It, in turn, is fixed to the shielding composite with internal hooks.

Stresses in the bottom plate are not calculated since the plate is reinforced by the pallet. This makes this area far stronger than the others under consideration.

The maximum allowable pressure for the cask body is based on the smallest value calculated:

$$P = \frac{St_o}{R_o} \text{ for outer cylindrical shell,}^{15}$$

$$= \frac{Sh^2}{\beta R_o^2} \text{ for top plate,}^{15} \text{ and}$$

$$= \frac{St_i}{R_i} \text{ for inner cylindrical shell,}^{15}$$

where $\beta = 0.4$ (Ref. 15).

S = yield stress (Pa),

P = pressure (Pa),

R_o = outer radius = 35.0 cm,

R_i = inner radius = 9.2 cm,

t_o = outer shell thickness = 6.4 mm,

h = plate thickness = 9.5 mm, and

t_i = inner shell thickness = 3.2 mm.

Thus

$$P_{out\ cyl} = \frac{(228)(6.4)}{350} = 4.16 \text{ MPa},$$

$$P_{top} = \frac{(228)(9.5)^2}{(0.4)(350)^2} = 0.42 \text{ MPa, and}$$

$$P_{inner\ cyl} = \frac{(207)(3.2)}{92} = 7.10 \text{ MPa}.$$

From the above values, the maximum allowable pressure based on the yield stress is 0.42 MPa (61 psi) in the space occupied by the shielding composite. This value is six times the relief valve setting.

The maximum allowable pressure in the cask cavity is determined by comparing the lid equation (Section 4.2.3) with the inner cylinder shell result:

$$P_{LID} = \frac{S \cdot h^2}{0.75\ R^2} = \frac{228\ (1.6)^2}{0.75(10.8)^2} = 6.7 \text{ MPa}.$$

$$P_{inner\ cyl} = 7.1 \text{ MPa}.$$

The limiting pressure is the smaller of the two. A pressure of 6.7 MPa in the cask cavity can not be developed under any credible conditions.

4.2.4.2 Special-Form Capsule

Section 2.5.2 described the special-form capsule. The manufacturer designed it for a pressure of 1.03 MPa at 1089 K. According to Ref. 16, the maximum allowable tensile stress at this temperature is 4.83 MPa. At 765 K, the capsule's maximum temperature (section 4.1.3), the maximum allowable tensile stress is 100.43 MPa. The corresponding pressure rating at 765 K is

$$P_1 = P_D\left(\frac{S}{S_o}\right) = 1.03\left(\frac{100.43}{4.83}\right)$$

$$= 21.5 \text{ MPa (3120 psi)}.$$

Assuming the gas in the capsule follows Charles' Law, the maximum allowable gas pressure at standard conditions is

$$P_2 = P_1\left(\frac{T_2}{T_1}\right) ,$$

where

P_1 = 21.5 MPa,

T_1 = 765 K, and

T_2 = 293 K.

Thus

$$P_2 = 21.5\left(\frac{293}{765}\right) = 8.23 \text{ MPa}.$$

The primary cause of the pressure is fission gas and helium gas resulting from alpha decay. The remainder of this section examines the parameters involved in generating these gases.

4.2.4.2.1 Maximum Allowable Gas Generation - Figure 2 lists the capsule volumes. The free volume available for the generated gas to occupy is

$$V_F = V_C - V_S ,$$

where

V_F = free volume (cm^3),

V_C = capsule volume from Fig. 2 (cm^3), and

V_S = sample volume (cm^3).

The volume of generated gas that raises the capsule pressure from atmospheric (101.3 kPa) to 8.23 MPa follows from

$$V_G = V_F \left(\frac{P_2 - P_o}{P_o} \right)$$

$$= \left(\frac{8.23 - 0.101}{0.101} \right) V_F$$

$$= 80.5 V_F \ cm^3 .$$

Sections 3.4.1 and 3.4.2 provide the fission gas and helium gas generation rates, which are then used to calculate the generated gas volumes

$$V_{SF} = 4104 \left(\frac{G}{A \cdot T_{SF}} \right) \ cm^3/s .$$

$$V_{He} = 15\ 527 \left(\frac{G \cdot F}{A \cdot T_{1/2}} \right) \ cm^3/s .$$

Also, it may be noted that V_{SF} and V_{He} multiplied by the amount of time the capsule is sealed equals V_G, or

$$V_G = \emptyset \ (V_{He} + V_{SF}) ,$$

where $\emptyset$ = amount of time sealed (s).

Combining the above equations yields the expression below. When the left and right hand sides are equal, the capsule pressure will be at the maximum allowable for the hypothetical accident conditions. If the left hand side is larger, the capsule pressure falls below the maximum allowable:

$$\frac{80.5(V_C - V_S)}{\emptyset} \geq G \left[\frac{4104}{A \cdot T_{SF}} + \frac{15\ 527\ F}{A \cdot T_{1/2}} \right]$$

The parameters again are

A = atomic mass (amu),

G = sample weight (g),

V_S = sample volume (cm^3),

$\emptyset$ = amount of time capsule is sealed (s),

F = number of alpha particles released per disintegration,

$T_{1/2}$ = half-life for alpha decay (s),

T_{SF} = spontaneous fission half-life (s), and

V_C = capsule volume from Fig. 2 (cm^3).

The second term on the right hand side of the expression is the maximum gas generation rate for the isotopes involved. Table 3 lists the specific gas generation rates for isotopes that would normally be encountered in the use of the cask. Appendix B has an example of the use of the expression and table.

4.2.5 Impact

4.2.5.1 Free Drop

4.2.5.1.1 Cask - A free drop through a distance of 9.14 m (30 ft) to strike a flat, essentially unyielding, horizontal surface in a position of maximum expected damage, will not reduce packaging effectiveness. The validity of this statement is demonstrated by analyses for end drop, side drop, and corner drop geometries.

Energy absorbed in the free drop is

$$E = Whg,$$

where

g = acceleration = 9.8 m/s^2,

W = cask mass = 857 kg,

h = drop distance = 9.14 m, and

$$E = 857 \times 9.14 \times 9.8$$
$$= 77.28 \text{ kN} \cdot \text{m (684,000 in.-lb)}.$$

4.2.5.1.1.1 End Drop - Examination of Fig. 1 indicates that a drop onto the cask top is worse than onto the bottom. In the latter case, the pallet base would deform. This would tend to minimize damage to the cask itself. A drop onto the cask top would probably drive the four lifting lugs through the top plate into the shielding composite. However, even in this event, the lugs could not damage the cask cavity or special-form capsule.

Energy absorption is through deformation of the cask's outer cylindrical shell and shielding composite. As a conservative approach, the cylindrical shell of the cask will be assumed to function only to support the shielding composite in the radial direction. The decrease in cask height is calculated from test results obtained from Ref. 17. The text follows and the curve appears in Fig. 8.

"The tests consisted of guided free-fall drops of steel cylinders of known weights and known end-face areas from measured heights to impact on the test surfaces (gypsum-spodumene) normal to the fall line. The impact, or fall, energies (in inch-pounds) per end-face areas of the steel bobs (in square inches) were then plotted vs the actual measured depths of penetration into the gypsum-spodumene.

"Tests with steel impacting on lead were conducted similarly.

"Unsifted gypsum-spodumene was felt to be non-homogeneous for the small face areas tested to be representative of a drop on a 6-inch diameter pedestal. Accordingly, 100 mesh gypsum was used for most tests.

"The gypsum-spodumene mixture is 40% (by weight) gypsum, 30% spodumene, 30% water, approximately 0.3% retarder. Curing time was 18 hours when the tests were made. Gypsum-spodumene specimens were bare; the cylinder impacted directly onto the test surface - no cladding intervening.

"It will be seen (Figure 8) that the plot on log-log scales is not linear. Rather the line exhibits positive curvature, stating in effect that the deeper the impact (and holding impact area constant) the more energy is abosrbed per given interval of impact depth. This variability can be examined by determining the energy absorbed by each .1" interval throughout a full .8" deep impact crater, and the results from such differential analysis are shown at the right

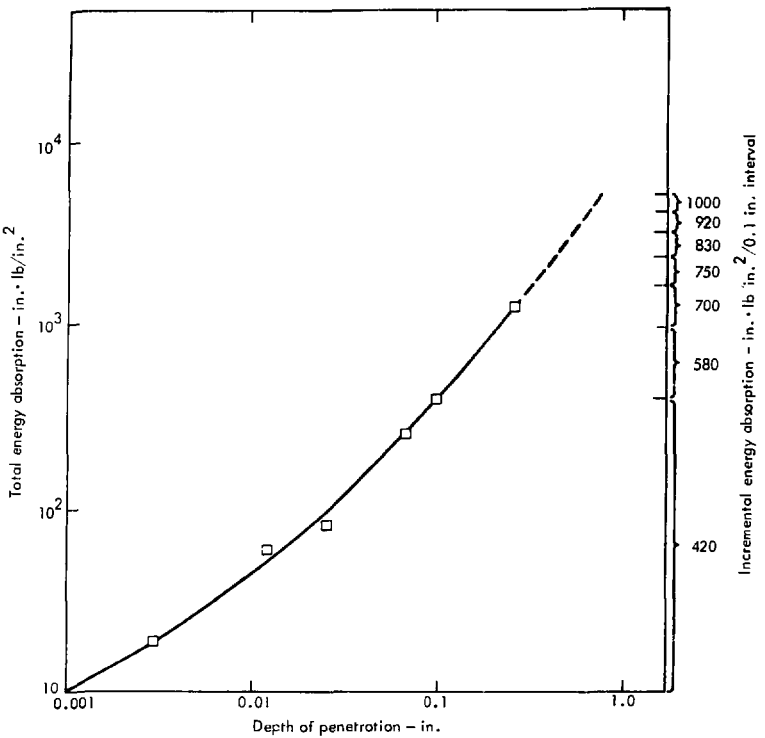

Fig. 8. Impact tests on gypsum-spodumene. The right hand scale accounts for variable compressibility. Section 4.2.5.1.1 explains the scale in further detail.

hand of the graph. These are the values used in calculating the impact depth of the package when dropped on its side. The positive curvature, or variable compressibility, is interpreted as a continuous compression of the gypsum-spodumene mixture throughout the full impact depth until fracture occurs. (Or instead, cratering occurs, since at no time was fracturing observed.) Cratering occurs in only the top layers of mixture, and then only because the material was exposed rather than clad."

The impact per unit of the top surface is

$$\frac{E}{A} = \frac{77.28}{\pi(35^2 - 8.9^2)}$$

$$= 215 \text{ kN/m } (1230 \text{ in.-lb/in.}^2).$$

The corresponding depth of penetration (compression) from Fig. 8 is 0.7 cm (0.28 inches). A decrease of this amount in a cask height of 89 cm will not cause a significant shielding problem.

4.2.5.1.1.2 Side Drop - The depth of penetration, or the extent of flattening, of the cylindrical surface is determined in incremental steps. As the depth increases, the energy absorption per unit area increases. Therefore, by first selecting a depth, the matching energy absorption per unit area can be found in Fig. 8. This value is then multiplied by the respective area to determine the energy absorption for that depth. The procedure is repeated until the sum energy absorption reaches E. The area is calculated from

$$A = 2L(2hR - h^2)^{1/2} ,$$

where

A = area of deformation (cm^2),

L = length of cask = 89.0 cm,

h = depth of penetration (cm),

R = cask radius = 35.0 cm, and

E = 77.28 kN • m (684,000 in.-lb).

Table 5. Shielding material deformation caused by side drop.

Depth of compression, h (in.)	Area of deformation, A ($in.^2$)	Energy absorption per unit area, $\frac{\Delta E}{A}$ ($in.-lb/in.^2$)	Energy absorption in depth interval, ΔE (in.-lb)	Sum of energy absorption, ΣE (in.-lb)
0.1	131	420	55,000	55,000
0.2	185	580	107,300	162,300
0.3	227	700	158,900	321,200
0.4	262	750	196,500	517,700
0.5	293	830	243,200	760,900

Table 5 summarizes the results of the calculation. The total penetration (actually compression) is seen to be about 0.5 in. (1.28 cm). This depth is only 4% of the shield thickness.

4.2.5.1.1.3 Corner Drop - The analyses for the end and side drops indicate that loss of shielding thickness is not the danger in a cask drop. The danger is a failure that would allow the special-form capsule to escape from the cask. This is most probable for top corner drop. If the lid bolts fail, the plug and capsule could be released. The impact of the top corner of the cask on an unyielding surface would cause the cask plug and contents to impact against the lid.

As a worst case, the drop angle must be very close to vertical to obtain maximum impact. Larger angles would cause the cask corner to hit first and decelerate the package. Also, some of the impact energy of the plug and capsule would be directed against the inner surface of the cask body and not the lid.

To demonstrate that the lid bolts would withstand the 9.14-m (30-ft) drop test under the worst conditions, several bolts were exposed to high-strain-rate conditions. The tests consisted of subjecting the same bolts as used on the lid to a high-strain-rate tensile test at a speed of 4.23 mm/s (600 in./min).

The data were plotted on a stress-strain diagram and a least-squares-fit was made. The variation between samples was on the order of 3%. The area under the curve indicated an average energy absorption of 281 N • m (2490 in.-lb) per bolt. The bolt test fixture, fabricated from type 304 stainless steel, had a thread engagement length identical to that on the cask. These conditions duplicated those in actual use.

The maximum energy to be absorbed by a 9.14-m drop is

$$E = Whg,$$

where

$h = 9.14$ m,

$g = 9.8$ m/s^2, and

W = mass of plug, lid, and special-form capsule

$= 22.7$ kg.

Thus

$$E = 22.7 \times 9.14 \times 9.8 = 2.034 \text{ kN} \cdot \text{m}.$$

The eight bolts in the lid can absorb 2.248 kN • m of energy or about 10% more than the maximum required.

4.2.5.1.2 Special-Form Capsule - The special-form capsule was subjected to a free drop through a distance of 9.14 m. The capsule, filled with helium at atmospheric pressure, dropped onto a rigid steel plate. The point of contact was controlled so the seal area could be subjected to the most damaging impact. After the tests, the capsule was checked for leak tightness. A helium mass spectrometer, with a sensitivity of 1×10^{-9} std cm^3/s, found no leakage.

4.2.5.2 Penetration

A rod with a diameter of 3.18 cm and mass of 5.9 kg was dropped from a height of 1.22 m onto a 6.4-mm-thick steel plate that simulated the cask shell. The plate showed no evidence of damage.

4.2.5.3 Puncture

Model tests were conducted to assure that the 6.4-mm-thick steel shell of the cask would survive the puncture test. The gypsum-spodumene aggregate was cast into a 10.2-cm-diam steel container with a 0.25-mm-thick wall. A 1.3-cm-diam steel punch with a mass of 0.45 kg was dropped 1.02 m onto the circumferential surface of the can. The punch deformed the surface but did not break through the steel wall. The gypsum-spodumene aggregate remained intact and did not crack. The scale of the model was calculated as follows:

$$\text{Scale factor} = \frac{\text{diameter required in annex 2 (Appendix A)}}{\text{diameter of model}}$$

$$= \frac{15.24 \text{ cm}}{1.3 \text{ cm}}$$

$$= 11.9.$$

$$\text{Mass of model} = \frac{\text{mass of cask}}{(\text{scale factor})^3}$$

$$= \frac{857}{11.9^3}$$

$$= 0.51 \text{ kg}.$$

$$\text{Model wall thickness} = \frac{\text{cask wall thickness}}{\text{scale factor}}$$

$$= \frac{6.4}{11.9}$$

$$= 0.53 \text{ mm}.$$

A 0.25-mm-thick wall was tested and found to be satisfactory; therefore, a 6.4-mm-thick shell is adequate for the cask.

Reference is also made to tests performed by J. Evans, H. Nelms, and W. C. Stoddart.[18] They report that for a cask with 6.4-mm-thick steel jacket material (S_u = 60,000 psi), the mass of the cask required to produce puncture is 3636 kg.

4.2.5.4 Percussion

A 2.54-cm-diam steel rod with a mass of 1.36 kg was dropped 1.02 m onto the wall of the special-form capsule. The capsule tested had the maximum outside diameter and minimum wall thickness (3.00 in. o.d. × 0.125 in. wall). There was no observable damage.

4.2.6 Lifting Devices

The system of lifting devices shall support three times the weight of the package without generating stress in any material beyond its yield strength.

4.2.6.1 Cask Body

The cask body has two sets of lifting devices: the pallet base and four lifting lugs at the cask top. The remainder of this cask body section analyzes the loads and stresses for the pallet base and lifting lugs.

4.2.6.1.1 Pallet Base Analysis - A model of the base (Fig. 9) ignores the stiffening effect of the cask shell and pallet. The base has fork lift channels partially under the cask body. The load (W) is three times the total cask weight. A calculation of the maximum stress (S) in the plate for this load follows:

$$M = \frac{W\ell}{8}, \text{ and}$$

$$S = \frac{6M}{bt^2}$$

$$= \frac{0.75\ W\ell}{bt^2},$$

where

W = load = 3 × 9.8 × 857 = 25.2 kN,

M = moment at the base,

ℓ = 81.3 cm,

b = 31.3 cm, and

t = 0.95 cm.

Thus

$$S = \frac{0.75 \times 25.2 \times 81.3}{81.3 \times 0.95^2}$$

$$= 208.5 \text{ MPa}.$$

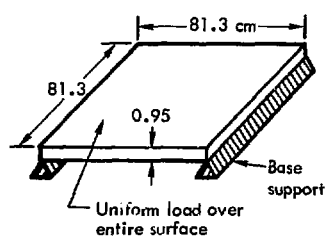

Fig. 9. Model of cask base.

The yield stress for the ASTM A7 steel base is 227.5 MPa.

4.2.6.1.2 Lifting Lug Analysis (Case 1) - Figure 10 shows a model of the lifting lug. The lug has a hole on the top for lifting and one on the side for tiedown. A lifting analysis is made for both holes. The lug, which is actually one piece, protrudes through the cask top and shell. It is completely welded into both of these pieces, but the shell weld is ignored in the analysis. The vertical load per lug is

$$P_V = \frac{3W}{4}$$

$$= \frac{3 \times 857 \times 9.8}{4}$$

$$= 6.32 \text{ kN.}$$

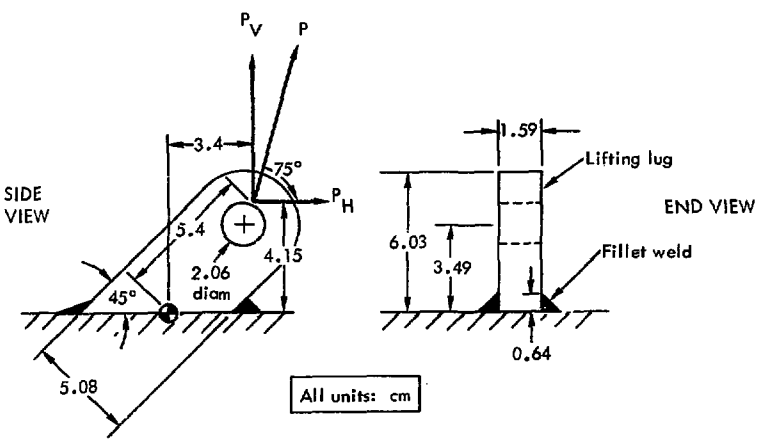

Fig. 10. Model of cask lifting lug (case 1).

The load can be resolved into a component along the axis of the weld, a component perpendicular to the controid of the weld, and a moment about the weld centroid. The load angle of 75° results from using 91-cm (36-in.)-long slings. The horizontal load is

$$P_H = \frac{P_V}{\tan 75°} = 1.69 \text{ kN.}$$

The clockwise moment due to the horizontal load is

$$M_H = P_H \times d_H$$

$$= 1.69 \times 4.15$$

$$= 7.01 \text{ kN} \cdot \text{cm.}$$

The counterclockwise moment due to the vertical load is

$$M_V = 6.32 \times 3.4$$

$$= 21.49 \text{ kN} \cdot \text{cm, and}$$

$$\Sigma M = M_V - M_H$$

$$= 14.48 \text{ kN} \cdot \text{cm.}$$

The lug-to-body weld experiences a shear stress and two normal stresses. The shear stress in the weld due to the horizontal load is

$$S_S = \frac{0.707P_H}{f(L + h)}, \quad \text{(Ref. 19)}$$

where

f = fillet size = 0.64 cm,

L = length of weld = $5.08\sqrt{2}$
= 7.18 cm,

h = lug thickness = 1.59 cm, and

P_H = 1.69 kN.

Thus

$$S_S = \frac{0.707 \times 1.69}{0.64(8.77)} = 2.1 \text{ MPa.}$$

The <u>normal stress due to the vertical load</u> is

$$S_{nv} = \frac{0.707P_v}{f(L+h)}$$

$$= \frac{0.707 \times 6.32}{0.64(8.77)}$$

$$= 8.0 \text{ MPa.}$$

The <u>normal stress due to the bending moment</u> is

$$S_{nb} = \frac{4.24\ M}{f[L^2 + 3h(L+f)]} \qquad \text{(Ref. 19)}$$

$$= \frac{4.24 \times 14.48}{0.64[7.18^2 + 3 \times 1.59(7.18 + 0.64)]}$$

$$= 10.8 \text{ MPa.}$$

The <u>maximum shear stress</u> is

$$S_{MAX} = \left[\left(\frac{S_n}{2}\right)^2 + S_S^2\right]^{1/2}$$

$$= \left[\left(\frac{18.8}{2}\right)^2 + 2.1^2\right]^{1/2}$$

$$= 9.6 \text{ MPa.}$$

Under the maximum shearing stress theory (Treska's Yield Criteria), the weld will not fail if S_{MAX} is less than half the yield strength. The AWS E60 weld metal yield strength is 344.8 MPa. The factor of safety is about 18.

The combined tensile stress in the lug is

$$S_t = \frac{P_v \cos 45°}{h \times L} + \frac{6P_v(\sin 45°)\ D}{hL^2}$$

$$= \frac{6.32 \times 0.707}{1.59 \times 5.08} + \frac{6 \times 6.32 \times 0.707 \times 5.4}{1.59 \times 5.08^2}$$

$$= 5.52 + 35.05$$

$$= 40.6 \text{ MPa.}$$

The yield strength for ASTM A 240 stainless steel, type 304, is 207 MPa.

The lug lifting holes are sized for steel shackles with a 1.9-cm-diam pin. The safe working load is 19.6 kN for drop-forged pin-type shackles of this size (Appendix D, Table D-4). The actual shackle load is $P = (P_H^2 + P_V^2)^{0.5} = (1.69^2 + 6.32^2)^{0.5} = 6.54$ kN. The smallest shackle that can be used safely is one with a 1.11-cm-diam pin. It has a 8.9-kN working load. Assuming this size shackle is used inadvertently, three other stresses are determined. These have common simplifying assumptions:

- The bearing stress uniformly distributes over an area equal to the pin diameter times the lug thickness.
- The shear stress uniformly distributes over an area equal to two times the pin diameter times the distance from the hole to edge (measured on the centerline).
- The tensile stress related to the shackle size is based on the net cross-sectional area at the hole location.

The bearing stress (S_b) calculation follows:

$$S_b = \frac{P}{dh},$$

where d = pin diameter
= 1.11 cm.

Thus

$$S_b = \frac{6.54}{1.11 \times 1.59}$$

$$= 37.1 \text{ MPa.}$$

The <u>shear stress</u> (S_s) is

$$S_s = \frac{P}{2he},$$

where e = distance to edge

$$= 2.54 - 1.04$$

$$= 1.50 \text{ cm.}$$

Thus

$$S_s = \frac{6.54}{2 \times 1.59 \times 1.50}$$

$$= 13.7 \text{ MPa.}$$

The <u>cross-sectional tension stress</u> (S_t) is

$$S_t = \frac{P}{A},$$

where A = (L-D)h

$$= (5.08 - 2.06)(1.59)$$

$$= 4.8 \text{ cm}^2.$$

Thus

$$S_t = \frac{6.54}{4.8}$$

$$= 13.6 \text{ MPa.}$$

Bearing strength is 160% of the yield strength[16] or 331.0 MPa. Shear strength is 60% of the yield strength[16] or 124.1 MPa. Yield strength is 206.9 MPa. The computed stresses do not approach any of these values.

4.2.6.1.3 Tiedown Lug Problem (Case 2) - The second case examined involves tiedown lugs used improperly as lifting lugs. Figure 11 shows the model. In this case, the shackle's inside depth is insufficient (the shackle contacts the lug at the point shown in the figure).

The tiedown lug's load angle of 65° is based on the use of a 91-cm (36-in.)-long sling. The load analysis that follows duplicates that done for the lifting lug.

From triangle A of Fig. 11,

$$P_v = 6.32 \text{ kN.}$$

$$P_H = \frac{P_v}{\tan 65°}$$

$$= 2.95 \text{ kN.}$$

From triangle B,

$$P_1 = \frac{P_v}{\sin 60°}$$

$$= \frac{6.32}{0.866},$$

$$= 7.30 \text{ kN.}$$

$$P_2 = \frac{P_v}{\tan 60°}$$

$$= 3.65 \text{ kN.}$$

The summation of moments about the centroid of the weld area gives

$$M = 6.32 \times 3.9 + 3.65 \times 4.2 - 2.95 \times 1.0$$

$$= 37.0 \text{ kN} \cdot \text{cm.}$$

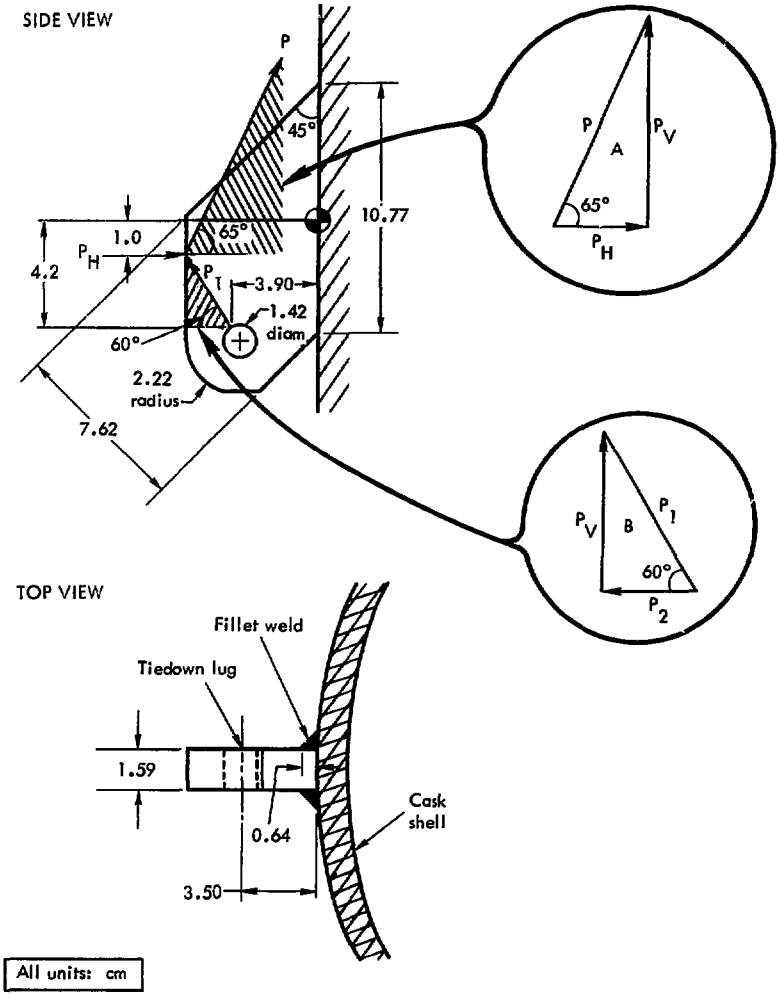

Fig. 11. Model of tiedown lug used improperly as lifting lug (case 2).

The <u>shear stress</u> is

$$S_s = \frac{0.707P_v}{f(L+h)}$$

$$= \frac{0.707 \times 6.32}{0.64(10.77 + 1.59)}$$

$$= 5.65 \text{ MPa.}$$

The <u>two normal stresses</u> are

$$S_{nv} = \frac{0.707(P_2-P_H)}{f(L+h)}$$

$$= \frac{0.707(3.65 - 2.95)}{0.64(10.77+1.59)}$$

$$= 0.63 \text{ MPa.}$$

$$S_{nb} = \frac{4.24M}{f[L^2 + 3h(L+f)]}$$

$$= \frac{4.24 \times 37}{0.64[10.77^2 + 3 \times 1.59(10.77 + 0.64)]}$$

$$= 14.38 \text{ MPa.}$$

The <u>maximum shear stress</u> is

$$S_{MAX} = \left[\left(\frac{14.38 + 0.63}{2}\right)^2 + 5.65^2\right]^{1/2}$$

$$= 9.4 \text{ MPa.}$$

The weld's maximum shear stress, with the undersized shackle, is slightly less than that for a proper shackle. However, the shackle tensile load increases from 6.54 kN to 7.30 kN. This load is still less than 8.9 kN, the shackle working load. Comparison of the geometries of the two cases makes it obvious that the lug is also safe in bearing, shear, and tension.

4.2.6.2 Plug

The plug has a 1.28-cm-diam stainless steel rod (7.01 cm long) in a recessed well in its top. This is more than adequate to support three times the plug weight of 178 N.

4.2.7 Tiedown Device

The tiedown devices, which are a structural part of the packaging, shall be capable of withstanding, without generating stress in any material beyond its yield strength, a static force applied to the center of gravity of the package, having:

- A vertical load two times the weight of the package.
- A horizontal load, in the longitudinal direction, ten times the weight of the package.
- A horizontal load, in the transverse direction, five times the weight of the package.

4.2.7.1 Vertical Load

Figure 12 shows the first condition model. Summing forces in a vertical direction,

$$\Sigma F_Y = 0,$$

$$0 = 4F_Y - 2W + W, \text{ and}$$

$$F_Y = 0.25W.$$

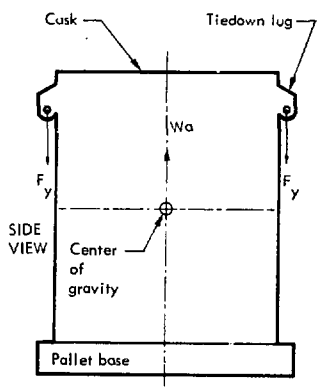

Fig. 12. Vertical load on tiedown lug.

4.2.7.2 Horizontal Loads

Figure 13 shows the forces due to loads in the longitudinal and transverse directions. Tension members secure the cask to the transporting vehicle. Chocks are assumed to prevent movement at the junction of the base and the bed of the vehicle. Initial tension in the

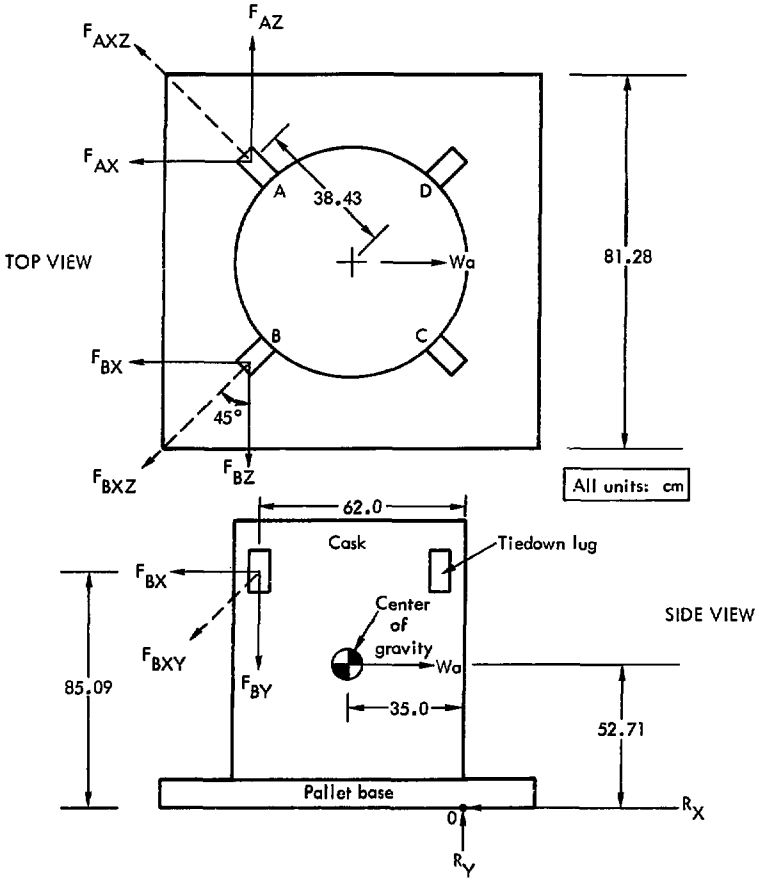

Fig. 13. Horizontal loads on tiedown lug.

tiedowns is neglected. The angle between the tiedowns and the bed is 32.4°. This assumes the package is shipped on the centerline of a 2.44-m (8-ft.)-wide truck bed, LLL's typical practice.

The vehicle is assumed to be accelerating to the left in Fig. 13. The package tends to rotate clockwise about the right corner of the base. However, the assumption of a completely rigid base is somewhat unrealistic and would result in an underestimate of the actual tiedown tension. To be conservative, it will be assumed that the edge of the cask shell is the center of rotation.

4.2.7.2.1 Longitudal Direction - Tension forces at C and D are negligible and ignored. An analysis of the forces follows:

$$F_{BX} = F_{BXZ} \sin 45° .$$

$$F_{BY} = F_{BXZ} \tan 32.4° .$$

$$F_{AX} = F_{BX} .$$

$$F_{BZ} = F_{AZ} .$$

$$F_{BX} = F_{BZ} .$$

$\Sigma F_X = 0$, and

$$0 = 2F_{BX} + R_X - 10W.$$

$\Sigma F_Y = 0$, and

$$0 = 2F_{BY} - R_Y .$$

$\Sigma M_O = 0$, and

$$0 = 52.71(10W) - 85.09\ (2F_{BX}) - 62.0(2F_{BY}) .$$

Solution:

$$F_{BZ} = 1.87W$$

$$= F_{AZ} \cdot$$

$$F_{BX} = 1.87W$$

$$= F_{AX} \cdot$$

$$F_{BY} = 1.68W$$

$$= F_{AY} \cdot$$

$$R_X = 6.13W \ .$$

$$R_Y = 3.36W.$$

4.2.7.2.2 Transverse Direction - The model for this condition can be obtained from the previous case by considering the load applied 90° to the 10W case.

$$F_{BZ} = F_{CZ}$$

$$= 0.94W \ .$$

$$F_{BX} = F_{CX}$$

$$= 0.94W \ .$$

$$F_{BY} = F_{CY}$$

$$= 0.84W \ .$$

$$R_X = 3.07W \ .$$

$$R_Y = 1.68W \ .$$

Summing the forces for the various points and loads yields the data for Table 6. The table values are multiples of the cask weight. The most heavily loaded point is B.

4.2.7.3 Tiedown Stress Calculations

These calculations are similar to those for the lifting lug.

4.2.7.3.1 Weld Stresses (Due to Vertical Force, F_{BY})

$$S_s = \frac{0.707F_{BY}}{f(L + h)} \text{ , and}$$

$$F_{BY} = 2.77W.$$

Thus

$$S_s = \frac{0.707 \times 2.77 \times 857 \times 9.8}{0.64(10.77 + 1.59)}$$

$$= 20.8 \text{ MPa.}$$

$$S_{nv} = \frac{4.24\ M}{f[L^2 + 3h\ (L + f)]} \text{ , and}$$

$$M = 2.77 \times 857 \times 9.8 \times 3.50 \text{ .}$$

Thus

$$S_{nv} = 31.7 \text{ MPa.}$$

4.2.7.3.2 Weld Stresses (Due to Horizontal Force, F_{BXZ}) - The horizontal force at the pin hole location resolves into a tensile force at the centroid of the weld area and a moment. The moment arm is the distance from the weld centroid to hole location (or 5.25 cm).

$$S_{nh} = \frac{4.24\ M}{f[L^2 + 3H\ (L + f)]} \text{ , and}$$

$$M = 3.97 \times 857 \times 9.8 \times 5.25 \text{ .}$$

Thus

$$S_{nh} = 68.0 \text{ MPa.}$$

The normal stress due to a force at the weld centroid is

$$S_n = \frac{0.707 F_{BXZ}}{f(L + h)}$$

$$= \frac{0.707 \times 3.97 \times 857 \times 9.8}{0.64(10.77 + 1.59)}$$

$$= 29.8 \text{ MPa.}$$

The total normal stress is the sum or

$$\Sigma S_n = 129.5 \text{ MPa.}$$

The maximum shearing stress

$$S_{MAX} = \left[\left(\frac{129.5}{2}\right)^2 + 20.8^2\right]^{1/2}$$

$$= 68.0 \text{ MPa.}$$

Since this value is less than the failure criterion (one half yield strength = 172.4 MPa), the welds will not fail.

The stresses in the lug material follow.

Table 6. Summation of tiedown forces.

	Force ($kg \cdot m/s^2$) (857 × 9.8)			
	Direction			
Location	X	Y	Z	XZ
A	1.87	1.93	1.87	2.64
B	2.81	2.77	2.81	3.97
C	0.94	1.09	0.94	1.33
D	0	0.25	0	0

4.2.7.3.3 Bearing Stress

$$S_b = \frac{F_{BXYZ}}{dh}, \text{ and}$$

$$F_{BXYZ} = 857 \times 9.8\ (2.77^2 + 3.97^2)^{1/2}$$

$$= 40.7 \text{ kN.}$$

Thus

$$S_b = \frac{40.7}{1.11 \times 1.59}$$

$$= 230 \text{ MPa.}$$

Bearing strength is 331.0 MPa.

4.2.7.3.4 Shear Stress

$$S_s = \frac{F_{BXYZ}}{2he}, \text{ and}$$

$$e = 2.22 - 0.71$$

$$= 1.51.$$

$$S_s = \frac{40.7}{2 \times 1.59 \times 1.51}$$

$$= 84.8 \text{ MPa.}$$

Shear strength is 124.1 MPa.

4.2.7.3.5 Cross-Sectional Tensile Stress

$$S_t = \frac{F_{BXYZ}}{A}$$

$$= \frac{40.7}{5.08 \times 1.59}$$

$$= 50.4 \text{ MPa.}$$

Yield strength is 206.9 MPa.

4.2.8 Truck Transport Tiedown

The criteria used for the tiedown system, other than the cask structural parts, appear in Ref. 20, Section 4.2:

> "Strength: All parts of the tiedown system, including attachment of the package to the cradle or base, and attachments to the vehicle, shall be so designed and fabricated that static stresses would not exceed 75% of the yield strength if the truck bed or trailer bed were subjected to a sustained acceleration of 2 g forward or backward, 1 g sidewise, 3 g vertically up or 2 g vertically down. Because of the gravity field, the net separating force between container and vehicle for downward acceleration is one times the container weight. For bolts, lashing rings, and tiedown lugs, the calculated stress under such conditions shall not exceed 75% of the yield strength. Required bolt torque shall be specified and shall correspond to an initial stress of no more than 75% of yield. For wire rope, chain, turnbuckles, and shackles, the load shall not exceed that given in Tables 1, 2, 3 and 4.
>
> "Stress analysis may include frictional forces and shall take account of the relative stiffness or elasticity of tiedowns which can affect the load distribution among the members."

The referenced tables can be found as Tables D-1 to D-4 in Appendix D of this report. The following calculations yield forces for acceleration in three different directions.

4.2.8.1 Longitudinal Acceleration of 2 g

For this calculation, the vehicle is assumed to be accelerating to the left in Fig. 13. No credit is taken for chocking at the cask base.

$$F_{BX} = F_{BXZ} \sin 45° ,$$

$$F_{BY} = F_{BXZ} \tan 32.4° ,$$

$$F_{AX} = F_{BX} ,$$

$$F_{BZ} = F_{AZ} , \text{ and}$$

$$F_{BX} = F_{BZ} .$$

Summing forces in the X direction gives us

$$\Sigma F_X = 0,$$

$$0 = 2F_{BX} + \mu(W + 2F_{BY}) - 2W.$$

where μ = coefficient of sliding friction of steel on wet wood

$\mu = 0.16$, (Ref. 21) and

$$F_{BX} = F_{BY} \frac{\sin 45°}{\tan 32.4°} .$$

The total tiedown tension is

$$F = (F_{BX}^2 + F_{BY}^2 + F_{BZ}^2)^{0.5} .$$

The solution is

$$F_{BZ} = F_{BX}$$

$$= 0.804W,$$

$$F_{BY} = 0.722W, \text{ and}$$

$$F = 1.347W .$$

4.2.8.2 <u>Lateral Acceleration of 1 g</u>

$$F_X = 0 ,$$

$$0 = 2F_{BX} + \mu(W + 2F_{BY}) - W .$$

Solution:

$$F_{BX} = F_{BZ}$$

$$= 0.367W,$$

$$F_{BY} = 0.330W, \text{ and}$$

$$F = 0.615W .$$

4.2.8.3 Vertical Acceleration of 1 g

$$\Sigma F_Y = 0 ,$$

$$0 = W - 4F_{BY} ,$$

$$F_{BY} = 0.25W, \text{ and}$$

$$F = \frac{F_{BY}}{\sin 32.4^\circ} = 0.467W .$$

The design force is the maximum value from above.

$$\text{Tiedown tension} = 1.347 \times 857 \times 9.8$$

$$= 11.3 \text{ kN } (2543 \text{ lb}).$$

Using Tables D-1 to D-3 of Appendix D, we see the tiedown may be 0.44-in.-diam wire or 0.25-in. chain with at least 0.63-in.-diam pin shackles.

4.3 SHIELDING ANALYSIS

The shielding properties of the gypsum-spodumene composite were determined from computer calculations using the ANISN shielding code.[22] These calculations, based on the elemental composition of the shielding material, give the absorbed dose rate due to neutrons and capture gamma rays. Figure 14 shows the results for total wall thicknesses of 7.0 cm and 30.0 cm. Also included is a curve for the shielding material compacted to 125% normal density. The shapes of the curves moderately depend on the total thickness of shielding in each case. This explains the anomaly of the higher density shielding resulting in a higher dose rate at some thicknesses.

4.3.1 Normal Transport Conditions

The calculation for the dose rate under normal transport conditions assumes the source is on the vertical centerline of the cask. Ignored is the shielding provided by the special-form capsule, the cask inner and outer walls, and any self-shielding.

$$D = S_n \times K \times \frac{1}{4\pi R^2} ,$$

where

D = dose rate (mrem/h),

S_n = source strength (neutrons/s),

K = value of ordinate for case in question from Fig. 14, [(mrem/h)/(neutrons/s)] cm^2, and

R = radius (cm).

The two dose rate limits are 200 mrem/h at the cask surface and 10 mrem/h at 91.4 cm. The maximum allowable source strength (S) for the first limit is

$$S_n = \frac{(4\pi R^2)(D)}{K}$$

$$= \frac{(4\pi \times 34.9^2)\ (200)}{3.95 \times 10^{-3}}$$

$$= 7.8 \times 10^8 \text{ neutrons/s.}$$

For the second limit of 10 mrem/h,

$$S_n = \frac{(4\pi \times 126.4^2)(10)}{3.95 \times 10^{-3}}$$

$$= 5.1 \times 10^8 \text{ neutrons/s.}$$

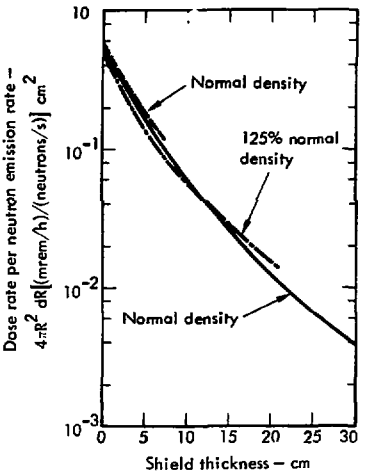

Fig. 14. Dose attenuation for gypsum-spodumene shield.

The calculated limit for the source strength is the smaller of the above two values or

$$S_n \leq 5 \times 10^8 \text{ neutrons/s .}$$

An indication of the amount of radioisotope involved can be obtained from the data in Section 3.3 and Table 3. For example, 1.0 g of ^{244}Cm produces 1.17×10^7 neutrons/s. Ignoring other considerations for the moment, the maximum amount of ^{244}Cm that could be shipped is

$$G = \frac{S_n}{\emptyset}$$

$$= \frac{5 \times 10^8}{1.16 \times 10^7}$$

$$= 44 \text{ g}$$

Disregarded in the above calculations is the effect of gamma emission by the radioisotope. It would result in an additional dose rate that must be included in the analysis. If the isotope in question was a strong gamma emitter, an estimate of the dose rate could be calculated by assuming the attenuation coefficient for the gypsum-spodumene to be of a material of similar electron density. The buildup factor could be handled in a corresponding manner. The calculated primary dose rate would be subtracted from the allowable total dose rate before solving for the source strength. Fortunately, most of the isotopes the cask is designed to transport are weak gamma emitters. Inspection of the decay schemes in Ref. 4 would indicate whether the primary gamma source need be considered.

Appendix B has an example of the use of Table 3 for estimating the maximum amount of radioisotope that can be shipped.

4.3.2 Hypothetical Accident Conditions

4.3.2.1 Effect of Impact

As shown in Section 4.2.5, the worst damage to the shielding during a drop is a reduction in thickness of 1.8 cm. Examination of Fig. 14 shows that this would cause a negligible increase in the dose rate.

4.3.2.2 Effect of Thermal Test

Section 4.1.2 and Fig. 7 denote the effect of a 30 min exposure to a temperature of 1075 K and a subsequent 3 h cooldown. The total thickness of shielding undergoing dehydration would be 10.8 cm. Assuming the effectiveness

of the dehydrated shielding composite to be nil, the ordinate for a 19.2-cm-thick shield is found from Fig. 14 to be

$$K = 1.3 \times 10^{-2} \text{ [(mrem/h)/(neutrons/s)] cm}^2 .$$

The value of the ordinate for the undamaged shield is

$$K_0 = 3.95 \times 10^{-3} \text{ [(mrem/h)/(neutrons/s)] cm}^2 .$$

All other conditions being equal, the dose rate will have increased to

$$D = \frac{K}{K_0} Do$$

$$= 3.3 \text{ Do} ,$$

where Do is the original dose rate.

If the 91.4-cm dose rate was at the maximum value of 10 mrem/h at the start of the thermal test, its new value would be 33 mrem/h. The cask surface dose rate would be

$$D = \frac{(5 \times 10^8)\ (1.3 \times 10^{-2})}{4\pi \times 34.9^2}$$

$$= 425 \text{ mrem/h.}$$

These calculated accident condition dose rates are conservatively high. The dehydrated shielding composite would still have a density of 80% of its original value (Section 2.2.2). The 20% loss would not significantly effect its gamma attenuation ability. The loss of water of hydration would primarily affect the ability of the shield composite to slow down neutrons to increase their probability of capture. The large portion of low-atomic-mass elements remaining would still be somewhat effective in moderating fission neutrons.

5.0 Quality Assurance Program

5.1 SCOPE

This section sets forth the program for quality assurance. It covers the methods of control and verification to be used during the design, procurement, fabrication, operation, maintenance, and modification phases.

5.2 RESPONSIBILITIES

The LLL Mechanical Engineering Department shall design and analyze the cask; prepare the drawings, specifications, and Safety Analysis Report; and establish inspection and acceptance criteria. Verification and audit of work shall be done within the department.

The fabricator shall assure that all specifications are met and perform and document the results of the inspection requirements specified. He shall obtain and provide the necessary material certifications and welding qualifications.

The LLL Materials Management Group shall implement the reuse inspection program, perform reuse inspections, and retain appropriate files to document such inspections.

Cask users shall provide the necessary information pertinent to the materials to be shipped. They shall also perform the appropriate packaging procedures.

5.3 FABRICATION AND ACCEPTANCE INSPECTION

The cask was completed before the existence of requirements calling for detailed written fabrication and inspection procedures. Section 2.2 and Table 1 list the materials used and their specifications.

Section 2.3 notes the fabrication methods. The cask was inspected and leak-checked prior to filling with the gypsum-spodumene, which was witnessed by LLL personnel. The cask also received a final inspection before painting.

There are no plans to fabricate any additional casks of this design. However, if there is a need for additional casks, fabrication and inspection procedures will be prepared and submitted for approval.

5.4 REUSE INSPECTION

The cask shall be examined before each use according to the reuse inspection checklist in Appendix E. Major defects that are found must be corrected prior to cask reuse. A major defect is one that judgment and experience indicate is likely to result in hazardous or unsafe conditions. It could lead to failure or reduce materially the usability of the cask.

5.5 INSPECTION RECORDS

The LLL Materials Management Group shall maintain the files documenting the receiving acceptance, reuse inspection (Appendix E), and operating check lists (Section 6.0).

6.0 Loading and Handling Procedure

The checklist in Appendix F shall be completed by the shipper and carrier whenever the cask is to be used.

7.0 Compliance With Chapter 0529

These paragraphs discuss LLL's complete compliance with the pertinent sections of Chapter 0529.

7.1 PART I

15.b. The special-form capsule is required to meet certain minimum size requirements. Examination of Fig. 2 indicates fulfillment of requirements.

15.b.1. Tests required by Annex 4 of Chapter 0529 (Appendix A) are to ascertain that the capsule will retain its contents.

- Free Drop. See Section 4.2.5.1.2.
- Percussion. See Section 4.2.5.4.
- Heating. See Section 4.1.3.
- Immersion. Immersion for 24 h in water at room temperature with a pH6 to pH8 will have no effect on a type 347 stainless steel capsule. There is no chemical, galvanic, or other reaction. Water will not enter the capsule.

7.2 PART II

A.1. Radioactive materials will be in a dry solid form. They will be placed in metal containers with which they do not react chemically and/or galvanically. There are no reactions between the packaging components of steel and gypsum-spodumene.

A.2. The special-form capsule cover and cask lid are both attached by several bolts. The bolts are torqued to values that prevent them from inadvertently coming loose. In addition, the cask lid bolts are seal wired.

A.3.a. Section 4.2.6.1 analyzes the lifting lugs and pallet base.

A.3.b. Section 4.2.6.2 analyzes the plug handle.

A.3.c. Not applicable (no such part).

A.3.d. The lug position is such that it cannot penetrate the cask cavity upon failure and impair the containment. The solid shielding composite is held in place by numerous hooks, a wire mesh screen, and the steel shell.

A.4.a. See Section 4.2.7 of this LLL report.

A.4.b. No structural part other than tiedown lug could be reasonably used.

A.4.c. Same comments as A.3.d.

B.1. See Section 4.2.1 of this LLL report.

B.2. See Section 4.2.3 of this LLL report.

C.1. See Section 3.5 of this LLL report. The limits set by LLL on the amount to be shipped prevent criticality even for a water-reflected metal/water mixture.

C.2. Not applicable. Liquids shall not be shipped.

C.3. Not applicable.

D.1.a. See E discussion.

D.1.b. See F discussion.

D.2. No controls by the shipper are anticipated other than those required for tiedown.

D.3. Not applicable. No deviations from normal conditions of transport or hypothetical accident conditions are required.

E.1.a,b,c. The effects of the normal conditions of transport (specified in Annex 1 of Appendix A) on the package follow:

- Heat. The maximum surface temperature and maximum internal temperature of the package are 329 K and 400 K when exposed to direct sunlight and an ambient peak temperature of 328 K in still air. Section 4.1.1 has the analysis. These temperatures will have no effect on the package, its contents, or the seals.
- Cold. The ambient temperature of 233 K will have no effect on the package, its contents, or the seals. Differences in thermal contraction and/or expansion will not damage the package.
- Pressure. Atmospheric pressure of 0.5 times standard atmospheric pressure will not cause the release of radioactive gases from special-form capsule or structural damage. The analysis in Section 4.2.4 indicates the cask can withstand better than 4.1 atm of pressure differential. The special-form capsule is routinely leak-tested at a pressure differential of 1 atm. It was also tested at an internal pressure of 276 kPa at 1089 K.

- Vibration. Normal transport vibration will not effect the package. The lid fasteners are safety wired and adequately torqued to prevent loosening.
- Water Spray. The package will not experience any detrimental effects from a 30 min water spray on all exposed surfaces
- Free Drop. A free drop of 1.22 m will not substantially reduce the package effectiveness. Section 4.2.5.1.1 analyzes a fall of 9.14 m.
- Corner Drop. Not required.
- Penetration. Test indicated no evidence of damage.
- Compression. Analysis in Section 4.2.2 shows the cask easily meets compression requirements.

E.1.d. Not applicable (no coolant).

E.1.e. Not applicable (no cooling system employed).

E.2.a. Quantities of fissile material are limited to those described in Section 3.5 and Table 4.

E.2.b. The geometric form of the package is not substantially altered under normal conditions of transport.

E.2.c. The special-form capsule, when assembled, is leak-tight.

E.2.d. Nuclear safety of the package is not geometry-dependent.

E.3. The special-form capsule will not vent under any of the following conditions specified in Annex 1 of Appendix A.

- Heat. Capsule operating temperature range is 6 K to 1089 K.
- Cold. See above comment.
- Pressure. See comments under E.1.a,b,c of this report.
- Vibration. Capsule fasteners are adequately torqued to prevent loosening.
- Water Spray. No effect on capsule.
- Free Drop. Capsule was subjected to Annex 4 (Appendix A) test (Section 4.2.5.4).
- Penetration. Capsule was subjected to Annex 4 (Appendix A) percussion test (Section 4.2.5.4).
- Compression. No effect on capsule.

F.1.a. The reduction of shielding when subjected to Annex 2 (Appendix A) conditions is not sufficient to increase the radiation dose rate to more than 1000 mrem/h at 91.4 cm from the package.

- Free Drop. See Section 4.2.5.1.1.
- Puncture. See Section 4.2.5.3.
- Thermal. See Section 4.3.2.
- Water Immersion. No effect on shielding.

F.1.b. No radioactive material will be released from package. Same comments in F.1.a of this report apply.

F.2. See Sections E.2.a and E.2.d of this report.

H. Preceding comments in C, E, and F indicate it is impossible to achieve criticality under any of the specified conditions.

7.3 PART III

Section 5.0 describes the Quality Assurance Program.

7.4 PART IV

Section 6.0 describes the Operating Procedures.

References

1. J. B. Loser, C. E. Moeller, and M. B. Thompson, Thermophysical Properties of Thermal Insulating Materials, Air Force Materials Laboratory, Wright-Patterson Air Force Base, Ohio, Rept. ML-TDR-64-5 (1964), pp. 29-30.

2. W. H. McAdams, Heat Transmission (McGraw-Hill, New York, 1954), 3rd ed.

3. R. E. Bolz and G. L. Tuve, Handbook for Applied Engineering Science (Chemical Rubber Co., Cleveland, 1970), p. 133.

4. C. M. Lederer, J. M. Hollander, and T. Perlman, Table of Isotopes (Wiley & Sons, New York, 1967), 6th ed.

5. A. Lorenz, A Survey of Neutron Sources and Their Applications, Lawrence Livermore Laboratory, Rept. UCRL-51298 (1972).

6. H. Etherington, Nuclear Engineering Handbook (McGraw-Hill, New York, 1958), 1st ed., pp. 11-28 to 11-31.

7. R. Douglas O'Dell, Nuclear Criticality Safety, ERDA Technical Information Center, Oak Ridge, Tenn., Rept. TID-26286 (1974).

8. Title 49, Code of Federal Regulations (Department of Transportation, Wash., D.C., 1972), Parts 171-178.

9. W. D. Wood, H. W. Deem, and C. F. Lucks, Thermal Radiative Properties of Selected Materials, Defense Metals Information Center, Columbus, Ohio, Rept. 117 (1962), p. 58.

10. Design Data (General Electric Corp., Heat Transfer Div., Schenectady, New York, 1956), Section G515.5, p. 8.

11. C. Strock and R. L. Koral, Handbook of Air Conditioning, Heating and Ventilation (Industrial Press, New York, 1965), 2nd ed., pp. 1-63.

12. A. L. Edwards, Trump: A Computer Program for Transient and Steady-State Temperature Distributions in Multidimensional Systems, Lawrence Livermore Laboratory, Rept. UCRL-14754 Rev. 3 (1972).

13. R. F. Quiring, Climatological Data Nevada Test Site and Nuclear Rocket Development Station, Air Resources Laboratories, Las Vegas, Nev., Rept. ERLTM-ARL 7 (1968).

14. L. B. Shappert, Cask Designers Guide, Oak Ridge National Laboratory, Oak Ridge, Tenn., Rept. ORNL-NSIC-68 (1970).

15. R. J. Roark, Formulas for Stress and Strain (McGraw-Hill, New York, 1965), 4th ed.

16. J. M. Guy et al., ASME Boiler and Pressure Vessel Code, Section VIII, Rules for Construction of Pressure Vessels, Division 1 (American Society of Mechanical Engineers, New York, 1971).

17. G. L. Wigle and P. S. Bringham, Analysis of Neutron Shipping Container 6-OS-1, Lawrence Berkeley Laboratory, Rept. LBL-2168 (1974).

18. J. H. Evans, H. A. Nelms, and W. C. Stoddart, "Experimental and Analytical Development at ORNL for Demonstrating Shipping Cask Compliance With Federal Regulations," in Proc. 2nd Intern. Symp. on Packaging and Transportation of Radioactive Materials (Union Carbide Corp. and USAEC, Gatlinburn, Tenn., 1968), p. 253.

19. J. E. Shigley, Machine Design (McGraw-Hill, New York, 1956), pp. 207-215.

20. Fuel Shipping Container Tiedown for Truck Transportation, ERDA Division of Reactor Research and Development, Wash., D.C., RDT Standard F 8-11T (1975).

21. T. Baumeister, Standard Handbook for Mechanical Engineers (McGraw-Hill, New York, 1967), 7th ed.

22. W. W. Engle, Jr., Users Manual for ANISN, K-1693 (Union Carbide Nuclear Division, Oak Ridge, Tenn., 1967).

LC/gw/vt/lmc

APPENDIX A
CHAPTER 0529 FROM HEALTH AND SAFETY SECTION OF ERDA MANUAL

Chapter 0529 SAFETY STANDARDS FOR THE PACKAGING OF FISSILE AND OTHER RADIOACTIVE MATERIALS

0529-01 POLICY

Fissile and other radioactive material shall be packaged and prepared for shipment in a manner that provides assurance of protection of the public health and safety during the transportation of such materials.

0529-02 OBJECTIVE

To establish safety standards for the packaging of fissile and other radioactive materials for shipment by AEC or by contractors not subject to 10 CFR 71.

0529-03 RESPONSIBILITIES AND AUTHORITIES

031 The Director, Division of Operational Safety:

a. determines the need for, and develops new and revised safety standards to be applied in the preparation of fissile and other radioactive materials for transportation.
b. provides a central point of coordination with the Director of Regulation for developing and revising health and safety codes pertaining to safety in the transportation of fissile and other radioactive materials which are intended for use in the AEC programs or by other federal agencies.
c. conducts periodic appraisals to determine the adequacy of the implementation of this chapter.
d. renders interpretations of this chapter.

032 The Director, Division of Waste Management and Transportation, in addition to the responsibilities and authorities assigned in 033, below:

a. administers the program for design review and issuance of AEC Certificates of Compliance as provided in 056, below, AECM 5201, and 49 CFR 172.39–173.396.
b. assists field offices in expediting essential shipments consigned to or by AEC and in securing waivers or exemptions from Federal Transportation Regulations.
c. prepares guidance criteria and procedures for application of package testing and quality assurance standards.
d. coordinates the total input for the General Manager in the development and revision of transportation regulations.

033 Heads of Divisions and Offices, Headquarters, excluding Regulatory, provide guidance, instructions, standards, and criteria as described in Chapter 0101, consistent with this chapter, to assure the safe packaging of fissile and other radioactive materials, including:

a. directing cognizant managers of field offices to require modifications of equipment procedures or practices.
b. imposing additional requirements for packaging standards.
c. curtailing or suspending the use of specific packages when necessary.

034 Managers of Field Offices, and the Director, Division of Naval Reactors, consistent with guidance, instructions, standards, and criteria issued pursuant to 033, above:

a. grant AEC approval for packages which meet the standards contained in appendix 0529 and 10 CFR 71.31–71.40, and which are to be used for the transportation of fissile or other radioactive materials in greater than Type A quantities.
b. grant AEC approval for shipments made under the National Security Exemption provided to the AEC and DOD under the Transportation of Explosives Act (18 U.S.C. 832c) and in accordance with the requirements of pertinent AEC manual chapters. Packages for such shipments must meet the policy stated in section 01.
c. grant such alternatives to the requirements set forth in appendix 0529 as will provide equivalent protection to life or property and to the common defense and security; and within 30 days after granting an alternative, provide the Director, Division of Operational Safety, a detailed report of the reasons for granting it. The granting of such alternatives is in no way to be construed as the granting of exemptions or exceptions from or to the Department of Transportation or other regulatory agency requirements.
d. conduct annual appraisals of contractor operations to assure compliance with the

Approved: June 14, 1973

requirements of this chapter.

e. require that their contractors carry out, as a minimum, quality assurance programs described in this chapter, and as provided for in appendix 5201.

(*NOTE:* Contractors shall not be permitted to exercise any of the above authorities.)

035 The Manager, Albuquerque Operations Office, in addition to the responsibilities and authorities assigned in 032, above, shall establish safety standards for packaging and transportation of nuclear weapons and their components in accordance with 055, below.

0529-04 DEFINITION

041 AEC Contractor–for the purposes of this chapter, means a prime contractor or subcontractor of the Atomic Energy Commission who is exempt from the requirements of 10 CFR 71.

0529-05 BASIC REQUIREMENTS

051 Applicability. The provisions set forth in this chapter and its appendix apply to the Headquarters, field offices, and AEC contractors.

052 Coverage. This chapter and its appendix cover policies and procedures for the preparation of fissile and other radioactive materials for shipment outside the boundaries of AEC-controlled sites by for-hire or private carriers, or on public vehicles or aircraft.

053 Federal Regulations. When offered to the carrier, each shipment of radioactive materials shall be in compliance with the applicable safety regulations of the Department of Transportation (DOT) or the U.S. Postal Service, depending on the mode of transportation.

054 Other Regulations

a. **International Atomic Energy Agency (IAEA) Regulations.** Each shipment of fissile and other radioactive materials consigned to a foreign country must meet the requirements set forth in IAEA Safety Series No. 6, "Regulations for the Safe Transport of Radioactive Materials." Specifically, "Requirements for Packaging and for Delivery of Packages to Transport," must be met to be in compliance with this chapter.

b. **International Air Transport Association (IATA) Restricted Article Regulations.** Each shipment of fissile and other radioactive materials consigned to a foreign country must meet the requirements set forth in IATA Restricted Articles Regulations when shipped via commercial aircraft.

c. **U.S. Air Force AFM-71-4, Packaging and Handling of Dangerous Materials for Transport by Military Aircraft.** Each shipment of fissile and other radioactive materials must meet the requirements set forth in AFM-71-4 when shipped via USAF aircraft.

055 Package Standards for Radioactive Materials in Amounts Greater Than Type A Quantities

a. Packages of radioactive materials shall be prepared for shipment and transported in accordance with the provisions of this chapter. DOT specification containers for Type B and fissile materials are considered to meet the standards of this chapter, and no specific AEC Certificates of Compliance are required for their use.

b. Nuclear weapons and their components shall be packaged and transported in accordance with the standards in this chapter or with other standards which provide a degree of safety at least equivalent to that provided by the AEC and DOT regulations. Standards will be developed and documented under 035, above.

c. Packages shipped under the National Security Exemption of 18 U.S.C. 832.c must be in compliance with the standards in this chapter and must also comply with the provisions of other pertinent AEC manual chapters.

d. All other packages for fissile and other radioactive materials in amounts greater than Type A quantities shall be designed, constructed, and used in accordance with the standards contained in the attached appendix, and in 10 CFR 71.31–71.40. Materials described in 71.6 are exempt from this requirement.

e. A quality assurance program must be established and implemented to assure that packages for radioactive materials are fabricated, maintained, and used in accordance with the regulations and approved design features. The program must meet the requirements in appendix 5201.

056 AEC Certificates of Compliance for Packages of Radioactive Materials in Excess of Type A

Quantities. Upon determination that a package design does in fact meet the requirements of this chapter and and its appendix and the AEC Standards in 10 CFR 71.31–71.40, an AEC Certificate of Compliance will be issued by the AEC to the contractor. Procedures for obtaining and issuing these certificates are set forth in AECM 5201. No certificate is necessary for shipments meeting the requirements of 10 CFR 71.6 or 71.7.

057 AEC as Consignor. Where an AEC office serves as the actual consignor, rather than a contractor, appropriate internal procedures shall be established by the responsible field office manager to assure compliance with the standards contained in this chapter.

058 Waivers and Exemptions. Packages which do not meet the standards in the DOT Hazardous Materials Regulations, and which do not qualify for shipment under the National Security Exemption, may be shipped only under the provisions of a waiver or exemption issued by the DOT, or on public vehicles or aircraft if approved under the provisions of AEC 0529-034c. Applications for a DOT Special Permit for waiver or exemption shall be prepared in accordance with 49 CFR 170.13 and shall be forwarded to the DOT for issuance of a special permit.

059 Existing Packagings. Existing packagings for radioactive materials must meet the standards of this chapter. However, Type B packagings designed and constructed prior to February 15, 1969, which could be subject to loss of shielding resulting from subjecting the packaging to the puncture test followed by the thermal test (49 CFR 173.398(c)(2)), are also approved for continued use. The packaging design must be covered by a DOT Special Permit providing for administrative and operational controls as may be necessary to compensate for the deficiencies in package integrity and to provide equivalent safety in transportation.

0529-06 REFERENCES

a. **AEC Regulation.** Title 10, Code of Federal Regulations, Part 71, "Packaging of Radioactive Material for Transport."

b. **DOT Regulations**
   1. Title 49, CFR Parts 170-189, and Title 14, CFR Part 103, "Hazardous Materials Regulations."
   2. Title 46, CFR Part 146, "Transportation or Storage of Explosives or other Dangerous Articles or Substances, and Combustible Liquids on Board Vessels."

c. **U.S. Postal Service Regulation.** Title 39, CFR Parts 124 and 125, "Nonmailable Matter" and "Matter Mailable Under Special Rules."

d. **International Atomic Energy Agency (IAEA) Safety Series No. 6,** "Regulations for the Safe Transport of Radioactive Materials," 1967.

e. **AECM 2401,** "Physical Protection of Classified Matter and Information."

f. **AECM 2405,** "Physical Protection of Unclassified Special Nuclear Material."

g. **AECM 0230,** "Records Disposition."

h. **AECM 0530,** "Nuclear Criticality Safety."

i. **AECM 0560,** "Program to Prevent Accidental or Unauthorized Nuclear Explosive Detonations."

j. **AECM 5201,** "Transportation and Traffic Management" (to be reissued under the title "Transportation of Property").

k. AEC Directory of Radioactive and Fissile Materials Shipping Containers, 1969.

l. International Air Transport Association (IATA) Restricted Article Regulations.

m. **U.S. Air Force AFM-4,** "Packaging and Handling of Dangerous Materials for Transport by Military Aircraft."

n. Transportation of Explosives Act (18 U.S.C. 832.c).

0529-07 NATIONAL EMERGENCY APPLICATION

During a national emergency, as defined in AECM 0601-04, the provisions of this chapter and appendix will continue in effect.

Approved: June 14, 1973

PART I

DEFINITIONS AND EXEMPTIONS

A. DEFINITIONS (as used in this appendix)

1. **Carrier** means any person engaged in the transportation of passengers or property, as common, contract, or private carrier, or freight forwarder, as those terms are used in the Interstate Commerce Act, as amended, or the U.S. Postal Service.

2. **Close Reflection by Water** means immediate contact by water of sufficient thickness to reflect a maximum number of neutrons.

3. **Containment Vessel** means the receptacle on which principal reliance is placed to retain the radioactive material during transport.

4. **Fissile Classification** means classification of a package or shipment of fissile materials according to the controls needed to provide nuclear criticality safety during transportation as follows:

   a. **Fissile Class I.** Packages which may be transported in unlimited numbers and in any arrangement and which require no nuclear criticality safety controls during transportation. For purposes of nuclear criticality safety control, a transport index is not assigned to Fissile Class I packages. However, the external radiation levels may require a transport index number.

   b. **Fissile Class II.** Packages which may be transported either in any arrangement but in numbers which do not exceed a transport index of 50. For purposes of nuclear criticality safety control, individual packages may have a transport index of not less than 0.1 and not more than 10. However, the external radiation levels may require a higher transport index number but not to exceed 10. Such shipments require no nuclear criticality safety control by the shipper during transportation.

   c. **Fissile Class III.** Shipments of packages which do not meet the requirements of Fissile Classes I or II and which are controlled in transportation by special arrangements between the shipper and the carrier to provide nuclear criticality safety.

5. **Fissile Materials** means uranium-233, uranium-235, plutonium-238, plutonium-239, and plutonium-241.

6. **Large Quantity** means a quantity of radioactive material, the aggregate radioactivity of which exceeds that specified in the following table for a transport group as defined in 16., below:

Radionuclide Identification	I	II	III	IV	V	VI-VII	Special Form
Radioactivity	20 Curies	20 Curies	200 Curies	200 Curies	5,000 Curies	50,000 Cureis	5,000 Curies

7. **Low Specific Activity Material** means any of the following:
   a. Uranium or thorium ores and physical or chemical concentrates of those ores.
   b. Unirradiated natural or depleted uranium or unirradiated natural thorium.
   c. Tritium oxide in aqueous solutions, provided the concentration does not exceed 5.0 millicuries per milliliter.
   d. Material in which the activity is essentially uniformly distributed and in which the estimated average concentration per gram of contents does not exceed:
      (1) 0.0001 millicuries of Group I radionuclides; or
      (2) 0.005 millicuries of Group II radionuclides; or
      (3) 0.3 millicuries of Group III or IV radionuclides.

   NOTE: This may include, but is not

limited to, materials of low radioactivity concentration, such as building rubble, metal, wood, and fabric scrap, glassware, paper and cardboard, solid or liquid plant waste, sludge, and ashes.

e. Nonradioactive objects externally contaminated with radioactive material, *provided that the radioactive material* is not readily dispersible and the surface contamination, when averaged over an area of one square meter, does not exceed 0.0001 millicuries (220,000 disintegrations per minute), per square centimeter of Group I radionuclides or 0.001 millicuries (2,200,000 disintegrations per minute) per square centimeter of other radionuclides.

8. **Maximum Normal Operating Pressure** means the maximum gauge pressure which is expected to develop in the containment vessel under the normal conditions of transport specified in annex 1, below, considered individually.

9. **Moderator** *means a material* used to reduce by scattering collisions, and without appreciable capture, the kinetic energy of neutrons.

10. **Optimum Interspersed Hydrogenous Moderation** means the occurrence of hydrogenous material between containment vessels to such an extent that the maximum *nuclear reactivity results.*

11. **Package** means packaging and its radioactive contents.

12. **Packaging** *means one or more receptacles* and wrappers and their contents, excluding fissile material and other radioactive material, but including absorbent material, spacing structures, thermal insulation, radiation shielding, devices for cooling and for absorbing mechanical shock, external fittings, neutron moderators, nonfissile neutron absorbers, and other supplementary equipment.

13. **Primary Coolant** means a gas, liquid, or solid, or combination of them, in contact with the radioactive material, or if the material is in special form, in contact with its capsule, and used to remove decay heat.

14. **Sample Package** means a package which is fabricated, packed, and closed to fairly represent the proposed package as it would be presented for transport, simulating the material to be transported, as to weight and physical and chemical form.

15. **Special Form** means any of the following physical forms of radioactive material of any transport group:
    a. The material is in solid form having no dimension less than 0.5 millimeter or at *least one dimension greater* than 5 millimeters; does not melt, sublime, or ignite in air at a temperature of 1000°F; will not shatter or crumble if subjected to the percussion test described in annex 4, below; and will not be dissolved or converted into a dispersible form in amounts greater than 0.005 percent by weight if immersed in water at 68°F or placed in air at 86°F for one week.
    b. The material is securely contained in a capsule having no dimension less than 0.5 millimeter or at least one dimension greater than 5 millimeters which *(1)* will retain its contents if subjected to the tests prescribed in annex 4, (2) is constructed of materials which do not melt, sublime, or ignite in air at 1475°F, and (3) will not be dissolved or converted into a dispersible form in amounts greater than 0.005 percent by weight if immersed for one week in water at 68°F or in air at 86°F.

16. **Transport Group** means any one of the seven groups in which radionuclides in normal form are classified, according to their *toxicity and their relative potential hazard in* transport (see annex 3).
    a. Any radionuclide not specifically listed in one of the groups in annex 3 shall be assigned to one of the groups in accordance with the following table:

	Radioactive Half-Life		
Radionuclide	0 to 1000 days	1000 days to 10^6 years	Over 10^6 Years
Atomic Number 1-81	Group III	Group II	Group III
Atomic number 82 and over	Group I	Group I	Group III

b. For mixtures of radionuclides the following shall apply:

(1) If the identity and respective activity of each radionuclide are known, the permissible activity of each radionuclide shall be such that the sum of the ratios between the total activity for each group to the permissible activity for each group will not be greater than unity.

(2) If the groups of the radionuclides are known, but the amount in each group cannot be reasonably determined, the mixture shall be assigned to the most restrictive group present.

(3) If the identity of all or some of the radionuclides cannot be reasonably determined, each of those unidentified radionuclides shall be considered as belonging to the most restrictive group which cannot be positively excluded.

(4) Mixtures consisting of a single radioactive decay chain where the radionuclides are in the naturally occurring proportions shall be considered as consisting of a single radionuclide. The group and activity shall be that of the first member present in the chain. Exception: If a radionuclide "x" has a half-life longer than that of the first member and an activity greater than that of any other member, including the first, at any time during transportation, the transport group of the nuclide "x" and the activity of the mixture shall be the maximum activity of that nuclide "x" during transportation.

17. **Transport Index** means the number placed on a package to designate the degree of control to be exercised by the carrier during transportation. The transport index to be assigned to a package of radioactive material shall be determined by either a. or b., below, whichever is larger. The number expressing the transport index shall be rounded up to the next highest tenth; e.g., 1.01 becomes 1.1.

a. The highest radiation dose rate in millirem per hour at three feet from any accessible external surface of the package.

b. The transport index for each Fissile Class II package is calculated by dividing the number 50 by the number of such Fissile Class II packages which may be transported together as determined under the limitations of part II,I.1. The calculated number shall be rounded up to the first decimal place.

18. **Type A Quantity and Type B Quantity** mean a quantity of radioactive material, the aggregate radioactivity of which does not exceed that specified in the following table:

Transport Groups (See I,A.16.)	Type A Quantity (in curies)	Type B Quantity (in curies)
I	0.001	20
II	0.05	20
III	3	200
IV	20	200
V	20	5,000
VI and VII	1,000	50,000
Special Forum	20	5,000

B. EXEMPTIONS

A shipper is exempt from all requirements of this appendix to the extent that he delivers to a carrier for transport packages each containing not more than a Type A quantity of radioactive material, as defined in A.18, above, which may include one of the following:

1. Not more than 15 grams of fissile material.
2. Thorium or uranium containing not more than 0.72 percent by weight of fissile material.
3. Uranium compounds, other than metal, (e.g., UF_4, UF_6, or uranium oxide in bulk form, not pelleted or fabricated into shapes) or aqueous solutions of uranium, in which the total amount of uranium-233 and plutonium present does not exceed 1.0 percent by weight of the uranium-235 content, and the total fissile content does not exceed 1.0 percent by weight of the total uranium content.
4. Homogeneous hydrogenous solutions or mixtures containing not more than:
   a. 500 grams of any fissile material, provided the atomic ratio of hydrogen to fissile material is greater than 7600.
   b. 800 grams of uranium-235, provided that the atomic ratio of hydrogen to fissile material greater than 5,200, and the content of other fissile material is

not more than 1 percent by weight of the total uranium-235 content.

c. 500 grams of uranium-233 and uranium-235, provided that the atomic ratio of hydrogen to fissile material is greater than 5,200, and the content of plutonium is not more than 1 percent by weight of the total uranium-233 and uranium-235 content.

5. Less than 350 grams of fissile material, provided that there is not more than 5 grams of fissile material in any cubic foot within the package.

PART II

PACKAGE STANDARDS

A. GENERAL STANDARDS FOR ALL PACKAGING

1. Packaging shall be of such materials and construction that there will be no significant chemical, galvanic, or other reaction among the packaging components or between the packaging components and the package contents.
2. Packaging shall be equipped with a positive closure which will prevent inadvertent opening.
3. Lifting devices for packagings.
   a. If there is a system of lifting devices which is a structural part of the packaging, the system shall be capable of supporting three times the weight of the package without generating stress in any material of the packaging in excess of its yield strength.
   b. If there is a system of lifting devices which is a structural part only of the lid, the system shall be capable of supporting three times the weight of the lid and any attachments without generating stress in any material of the lid in excess of its yield strength.
   c. If there is a structural part of the packaging which could be employed to lift the package and which does not comply with a., above, the part shall be securely covered or locked during transport in such a manner as to prevent its use for that purpose.
   d. Each lifting device which is a structural part of the packaging shall be so designed that failure of the device under excessive load would not impair the containment or shielding properties of the packaging.
4. Tiedown devices for packagings
   a. If there is a system of tiedown devices which is a structural part of the packaging, the system shall be capable of withstanding, without generating stress in any material of the packaging in excess of its yield strength the following: (1) a static force applied to the center of gravity of the package having a vertical component of two times the weight of the package, (2) a horizontal component along the direction in which the vehicle travels of 10 times the weight of the package, and (3) a horizontal component in the traverse direction of five times the weight of the package.
   b. If there is a structural part of the packaging which could be employed to tie the package down and which does not comply with a., above, the part shall be securely covered or locked during transport in such a manner as to prevent [illegible] for that purpose.
   c. [illegible] tiedown device which is a [illegible]ural part of the packaging shall be so designed that failure of the device under excessive load would not impair the ability of the packaging to meet other requirements of this section A.
5. Determination of transport indexes for packagings see part I,A.17. of this appendix.

B. STRUCTURAL STANDARDS FOR TYPE B AND LARGE QUANTITY PACKAGING

Packaging used to ship a Type B or a large quantity of radioactive material, as defined in part I,A.6 and 18, above, shall be designed and constructed in compliance with the structural standards of this section. Standards different from those specified in this section may be approved by the manager or other designated official if the controls proposed to be exercised by the shipper are demonstrated to be adequate to assure the safety of the shipment.

1. **Load Resistance.** Regarded as a simple beam supported at its end along any major axis, packaging shall be capable of withstanding a static load, normal to and uniformly distributed along its length, equal to 5 times its fully loaded weight, without generating stress in any material of the packaging in excess of its yield strength.
2. **External Pressure.** Packaging shall be adequate to assure that the containment vessel will suffer no loss of contents if subjected to an external pressure of 25 pounds per square-inch gauge.

C. CRITICALITY STANDARDS FOR FISSILE MATERIAL PACKAGES

1. A package used for the transport of fissile material shall be so designed and constructed

and its contents so limited that it would be subcritical if it is assumed that water leaks into the containment vessel; and

a. water moderation of the contents occurs to the most reactive credible extent consistent with the chemical and physical form of its contents; and

b. the containment vessel is fully reflected on all sides by water.

2. A package used for the transport of fissile material shall be so designed and constructed and its contents so limited that it would be subcritical if it is assumed that any contents of the package which are liquid during *normal transport* leak out of the containment vessel, and that the fissile material is then:

a. in the most reactive credible configuration consistent with the chemical and physical form of the material.

b. moderated by water outside of the containment vessel to the most reactive credible extent.

c. *fully reflected on all sides by water.*

3. The manager or other designated official may approve exceptions to the requirements of this section where the containment vessel incorporates special design features which *would preclude leakage of liquids in spite of* any single packaging error, and appropriate measures are taken before each shipment to verify the leak tightness of each containment vessel.

D. EVALUATION OF A SINGLE PACKAGE

1. The effect of the transport environment on the safety of any single package of *radioactive material* shall be evaluated as follows:

a. The ability of a package to withstand conditions likely to occur in normal transport shall be assessed by subjecting a *sample package or scale model* by test or other assessment to the normal conditions of transport as specified in E., below.

b. The effect on a package of conditions *likely to occur in an accident* shall be assessed by subjecting a sample package or scale model, by test or other assessment, to the hypothetical accident conditions, as specified in F., below.

2. *Taking into account* controls to be exercised by the shipper, the manager or other designated official may permit the shipment to be evaluated together with or without the transporting vehicle for the purpose of one or more tests.

3. Normal conditions of transport and hypothetical accident conditions different from those specified in E. and F., below, may be approved by the manager or other designated official if the controls proposed to be exercised by the shipper are demonstrated to be adequate to assure the safety of the shipment.

E. STANDARDS FOR NORMAL CONDITIONS OF TRANSPORT FOR A SINGLE PACKAGE

1. A package used for the shipment of fissile material or more than Type A *quantity of* radioactive material as defined in part I, A.6 and 18, above, shall be so designed and constructed, and its contents so limited that under the normal conditions of transport specified in annex I below:

a. there will be no release of radioactive materials from the containment vessel.

b. the effectiveness of the packaging will not be substantially reduced.

c. there will be no mixture of gases or vapors in the package which could, through any credible increases of pressure or an explosion, significantly reduce the effectiveness of the package.

d. radioactive *contamination* of the liquid or gaseous primary coolant will not exceed 10^{-7} curies of activity of Group I radionuclides per milliliter, 5×10^{-6} curies of activity of Group II radionuclides per milliliter; 3×10^{-4} curies of activity of Group III and Group IV radionuclides per milliliter.

e. there will be no loss of coolant or loss of operation of any mechanical cooling device.

2. A package used for the shipment of fissile material shall be designed and constructed, and its contents so limited, that under normal conditions of transport specified in annex I, considered *individually*:

a. the package will be subcritical.

b. the geometric form of the package contents would not be substantially altered.

c. there *will be no leakage* of water into the containment vessel. This requirement need not be met if, in the *evaluation of undamaged packages*

under H.1, I.1.a., or J.1., below, it has been assumed that moderation is present to such an extent as to cause maximum reactivity consistent with the chemical and physical form of the material.

d. there will be no substantial reduction in the effectiveness of the packaging, including:

(1) reduction by more than 5 percent in the total effective volume of the packaging of which nuclear safety is assessed.

(2) reduction by more than 5 percent to the effective spacing on which nuclear safety is assessed between the center of the containment vessel and the outer surface of the packaging.

(3) occurrence of any aperture in the outer surface of the packaging large enough to permit the entry of a 4-inch cube.

3. A package used for the shipment of more than Type A quantity of radioactive material as defined in part I,A.6. and 18., above, shall be so designed and constructed, and its contents so limited, that under the normal conditions of transport specified in annex 1, considered individually, the containment vessel would not be vented directly to the atmosphere.

F. STANDARDS FOR HYPOTHETICAL ACCIDENT CONDITIONS FOR A SINGLE PACKAGE

1. A package used for the shipment of more than Type A quantity of radioactive material (see part I,A.6. and 18., above) shall be so designed and constructed, and its contents so limited, that if subjected to the sequence of the hypothetical accident conditions specified in annex 2, it will meet the following conditions:

a. The reduction of shielding would not be sufficient to increase the external radiation dose rate to more than 1000 millirems per hour at three feet from the external surface of the package.

b. No radioactive material would be released from the package except for gases and contaminated coolant containing total radioactivity exceeding neither:

(1) 0.1 percent of the total radioactivity of the package contents; nor

(2) 0.01 curie of Group I radionuclides, 0.5 curie of Group II radionuclides, 10 curies of Group III radionuclides, 10 curies of Group IV radionuclides, and 1000 curies of inert gases irrespective of transport group.

A package need not satisfy the requirements of this paragraph if it contains only low specific activity materials, as defined in part I,A.7, above, and is transported on a motor vehicle, railroad car, aircraft, inland watercraft, or hold or deck of a seagoing vessel assigned for the sole use of the shipper.

2. A package, used for the shipment of fissile material shall be so designed and constructed, and its contents so limited, that if subjected to the sequence of the hypothetical accident conditions specified in annex 2, the package would be subcritical. In determining whether this standard is satisfied, it shall be assumed that:

a. the fissile material is in the most *reactive credible configuration* consistent with the damaged condition of the package and the chemical and physical form of the contents.

b. water moderation occurs to the most reactive credible extent consistent with the damaged condition of the package and the chemical and physical form of the contents.

c. there is reflection by water on all sides and as close as is consistent with the damaged condition of the package.

G. EVALUATION OF AN ARRAY OF PACKAGES OF FISSILE MATERIAL

1. The effect of the transport environment on the nuclear criticality safety of an array of packages of fissile material shall be evaluated by subjecting a sample package or a scale model, by test or other assessment, to the hypothetical accident conditions specified in H., I., or J., below, for the proposed fissile class, and by assuming that each package in the array is damaged to the same extent as the sample package or scale model. In the case of a Fissile Class III shipment, the manager or other designated official may, taking into account controls to be exercised

by the shipper, permit the shipment to be evaluated as a whole rather than as individual packages, and either with or without the transporting vehicle, for the purpose of one or more tests.

2. In determining whether the standards of H.2., I.1.b., and J.2., below, are satisfied, it shall be assumed that:
   a. the fissile material is in the most reactive credible configuration consistent with the damaged condition of the package, the chemical and physical form of the contents, and controls exercised over the number of packages to be transported together.
   b. water moderation occurs to the most reactive credible extent consistent with the damaged condition of the package and the chemical and physical form of the contents.

H. SPECIFIC STANDARDS FOR A FISSILE CLASS I PACKAGE

A Fissile Class I package shall be so designed and constructed and its contents so limited that:

1. any number of such undamaged packages would be subcritical in any arrangement, and with optimum interspersed hydrogenous moderation unless there is a greater amount of interspersed moderation in the packaging, in which case that greater amount may be considered.
2. two hundred and fifty such packages would be subcritical in any arrangement, if each package were subjected to the sequence of the hypothetical accident conditions specified in annex 2, with close reflection by water on all sides of the array and with optimum interspersed moderation unless there is a greater amount of interspersed moderation in packaging, in which case that greater amount may be considered. The condition of the package shall be assumed to be as described in G., above.

I. SPECIFIC STANDARDS FOR A FISSILE CLASS II PACKAGE

1. A Fissile Class II package shall be so designed and constructed and its contents so limited, and the number of such packages which may be transported together so limited, that:
   a. five times that number of such undamaged packages would be subcritical in any arrangement if closely reflected by water.
   b. twice that number of such packages would be subcritical in any arrangement if each package were subjected to the sequence of hypothetical accident conditions specified in annex 2, with close reflection by water on all sides of the array and the optimum interspersed hydrogenous moderation, unless there is a greater amount of interspersed moderation in the packaging in which case the greater amount may be considered. The condition of the package shall be assumed to be as described in G., above.
2. The transport index for each Fissile Class II package is calculated by dividing the number 50 by the number of such Fissile Class II packages which may be transported together as determined under the limitations in 1., above. The calculated number shall be rounded up to the first decimal place.

J. SPECIFIC STANDARDS FOR A FISSILE CLASS III SHIPMENT

A package for a Fissile Class III shipment shall be so designed and constructed and its contents and number of packages so limited, that:

1. the undamaged shipment would be subcritical with an identical shipment in contact with it and with the two shipments closely reflected on all sides by water.
2. the shipment would be subcritical if each package were subjected to the hypothetical accident conditions specified in the sequence specified in annex 2, with close reflection by water on all sides of the array and with the packages in most reactive arrangement and with the most reactive degree of interspersed hydrogenous moderation which would be credible considering the controls to be exercised over the shipment. The condition of the package shall be assumed to be as described in G., above. Hypothetical accident conditions different from those specified in this subparagraph may be approved by the manager or other designated official if the controls proposed to be exercised by the shipper are demonstrated to be adequate to assure the safety of the shipment.

PART III

QUALITY ASSURANCE PROCEDURES FOR THE FABRICATION, ASSEMBLY, AND TESTING OF OFFSITE SHIPPING CONTAINERS

A. ESTABLISHMENT AND MAINTENANCE OF PROCEDURES

1. Each field office shall require its contractors to establish and maintain a quality assurance program to:
   a. assure that the requisite standards of quality are met in the fabrication, assembly, and testing of each package.
   b. assure that packages in use continue to meet the requisite standards of quality.

B. ELEMENTS OF A QUALITY ASSURANCE PROGRAM

1. The program shall consist of a formal system of procedural and organizational arrangement which:
   a. require that specific responsibilities be assigned to designated units (including those of the vendor, the fabricator, and the contractor) for assuring specified quality at all stages of construction.
   b. designate codes, standards, and specifications for materials, equipment, methods of fabrication, testing, and performance.
   c. provide for quality control of materials, equipment, and services in instances where these have not already been established by existing standards and specifications.
   d. provide, as required by AECM 0504, for at least an annual audit of the AEC contractors' programs to assess their effectiveness.
   e. provide that quality assurance records are maintained in an auditable file during the service life of the container.
   f. provide for a method of determining that packagings procured for use from other sources, including AEC contractors and subcontractors or from licensees meet the requirements of AECM 0529.
   g. establish acceptance criteria in terms of measurable characteristics and the effects of appropriate tests prescribed in annexes 1, 2, and 4 and as required in part III,C.
   h. provide for a program of routine maintenance inspection and, where necessary, retesting to assure that reusable containers continue to meet the applicable design standards.
   i. provide for required training, testing, and certification of manufacturing and inspection personnel involved in special processes, such as welding and nondestructive examination, and for the required certification of equipment and procedures used in the performance of special processes.

PART IV

OPERATING PROCEDURES

A. ESTABLISHMENT AND MAINTENANCE OF PROCEDURES

1. The shipper shall establish and maintain:
   a. *operating procedures adequate to assure* that the determinations and controls required by this appendix are accomplished.
   b. *regular and periodic inspection* procedures adequate to assure that the shipper follows the procedures required by a.. above.

B. ASSUMPTIONS AS TO UNKNOWN PROPERTIES

When the isotopic abundance, mass, concentration, degree of irradiation, degree of moderation, or other *pertinent property* of fissile material in any package is not known, the shipper shall package the fissile material as if the unknown properties have such credible values as will cause the maximum nuclear reactivity.

C. PRELIMINARY DETERMINATIONS

1. Prior to the first use of any packaging for the shipment of more than a Type A quantity of radioactive material or fissile materials, such packaging shall be inspected to ascertain that there are no cracks, pinholes, uncontrolled voids, or other defects which *could significantly reduce* its effectiveness.
2. Prior to the first use of any packaging for the shipment of more than a Type A quantity of radioactive or fissile materials, where the maximum normal operating pressure will exceed 5 pounds per square-inch gauge, the containment vessel shall be tested to assure that it will not leak at an internal pressure 50 percent higher than the maximum normal operating pressure.
3. Packaging shall be conspicuously and durably marked with its model number. Prior to applying the model number, an inspection shall be made to determine that the packaging has been fabricated in accordance with the approved design.

D. ROUTINE DETERMINATIONS

Prior to each use of a package for shipment of radioactive or fissile material, the shipper shall *ascertain that the package with its contents satisfies* the applicable requirements of part II including determinations that:

1. the packaging has not been significantly damaged.
2. any moderators and nonfissile neutron absorbers, if required, are as authorized.
3. the closure of the package and any sealing *gaskets are present and are free from defects.*
4. any valve through which primary coolant can flow is protected against tampering.
5. the internal gauge pressure of the package *will not exceed, during the anticipated* period of transport, the maximum normal operating pressure.
6. contamination of the primary coolant will not exceed, during the *anticipated period of* transport, the limits in part II,E.1.d.

E. RECORDS

This shipper shall maintain for a period prescribed in appendix 0230, "Records Disposition," a record of each shipment of fissile material and each shipment of amounts of radioactive material greater than Type A quantities as defined in part I,A.6. and 18.. in single packages, showing where applicable:

1. identification of the packaging by model number.
2. details of any significant defects in the packaging, with the means employed to repair the defects and prevent their recurrence.
3. volume and identification of coolant.
4. type and quantity of material in each *package, and the* total quantity in each shipment.
5. for each item of irradiated fissile material:
   a. identification by model number.
   b. *irradiation and decay history* to the extent appropriate to demonstrate that its nuclear and thermal characteristics comply with approved conditions.
   c. any abnormal or *unusual condition* relevant to radiation safety.
6. date of the shipment.
7. for Fissile Class III, any special controls exercised.
8. name and address of the transferee.

9. address to which the shipment was made.
10. results of the determinations required by C. and D., above.

F. DOCUMENTATION OF TECHNICAL BACKUP SUPPORT FOR SPECIFICATION, CERTIFIED, AND SPECIAL PERMIT PACKAGINGS

Packagings that have been certified by the AEC as meeting DOT regulations and packagings for which specifications have been published by the DOT or a special permit has been issued by the DOT may be used by any shipper having authority to ship radioactive or fissile materials. Therefore, it is essential that technical information and limits pertinent to the construction and use of these packagings be available to all potential users. Accordingly, steps will be taken to implement the following requirements:

1. Field office managers shall require contractors under their jurisdiction to prepare a bound distributable document for each new specification, certified, or special permit, packaging designed, developed, and fabrication by him for offsite shipment of fissile and other radioactive materials. Such a document shall also be required for existing packagings for which the DOT has issued special permits except in those instances of packagings of a highly specialized design and used solely by the originator. Should these specialized packagings be adopted for more general utilization, an appropriate technical document must then be prepared. it shall be the responsibility of the originator or first user to prepare the document for an existing packaging if it is to be used by other AEC field offices and contractors. Obsolete packagings no longer in use and containers used for onsite movement of materials are not subject to these documentation requirements unless they are reactivated, altered, or requested for use in offsite shipments. In such instances the party or parties requiring reactivation and/or alterations shall prepare or have prepared the appropriate document.
2. Each document shall provide, as a minimum, the following information:
   a. a complete physical and technical description of the package.
   b. a safety analysis report including considerations for meeting the requirements for packaging and transport safety, nuclear criticality safety, and radiological safety. Pertinent documents in existence as of the date of this revision are acceptable.
   c. design and development information including pertinent data, analytical methods, and the results of the prescribed tests.
   d. tables, graphs, drawings, pictures, and technical references as required to give a clear treatment of the subject.
3. Each document shall be prepared and submitted to the Technical Information Center in accordance with appendix 3201, part III.B.2. for reproduction and distribution based upon need.

ANNEX 1

NORMAL CONDITIONS OF TRANSPORT

1. **Heat**—Direct sunlight at an ambient temperature of 130°F in still air.

2. **Cold**—An ambient temperature of -40°F in still air and shade.

3. **Pressure**—Atmospheric pressure of 0.5 times standard atmospheric pressure.

4. **Vibration**—Vibration normally incident to transport.

5. **Water Spray**—A water spray sufficiently heavy to keep the entire exposed surface of the package except the bottom continuously wet during a period of 30 minutes.

6. **Free Drop**—Between 1½ and 2½ hours after the conclusion of the water spray test, a free drop through the distance specified below onto a flat essentially unyielding horizontal surface, striking the surface in a position for which maximum damage is expected.

Free Fall Distance

Package Weight (pounds)	Distance (feet)
Less than 10,000	4
10,000 to 20,000	3
20,000 to 30,000	2
More than 30,000	1

7. **Corner Drop**—A free drop onto each corner of the package in succession or in the case of a cylindrical package, onto each quarter of each rim, from a height of 1 foot onto a flat essentially unyielding horizontal surface. This test applies only to packages which are constructed primarily of wood or fiberboard, and do not exceed 110 pounds gross weight, and to all Fissile Class II packagings.

8. **Penetration**—Impact of the hemispherical end of a vertical steel cylinder 1¼ inches in diameter and weighing 13 pounds, dropped from a height of 40 inches onto the exposed surface of the package which is expected to be most vulnerable to puncture.

9. **Compression**—For packages not exceeding 10,000 pounds in weight, a compressive load equal to either 5 times the weight of the package or 2 pounds per square inch multiplied by the maximum horizontal cross section of the package, whichever is greater. The load shall be applied during a period of 24 hours, uniformly against the top and bottom of the package in the position in which the package would normally be transported.

ANNEX 2

HYPOTHETICAL ACCIDENT CONDITIONS

1. **Free Drop** A free drop through a distance of 30 feet onto a flat essentially unyielding horizontal surface, striking the surface in a position for which maximum damage is expected.

2. **Puncture** - A free drop through a distance of 40 inches striking, in a position maximum damage is expected, the top end of a vertical cylindrical mild steel bar mounted on an essentially unyielding horizontal surface. The bar shall be 6 inches in diameter, with the top horizontal and its edge rounded to a radius of not more than one-quarter inch, and of such a length as to cause maximum damage to the package, but not less than 8 inches long. The long axis of the bar shall be perpendicular to the unyielding horizontal surface.

3. **Thermal** - Exposure to a thermal test in which the heat input to the package is not less than that which would result from exposure of the whole package to a radiation environment of 1475°F for 30 minutes with an emissivity coefficient of 0.9, assuming the surfaces of the package have an absorption coefficient of 0.8. The package shall not be cooled artificially until 3 hours after the test period unless it can be shown that the temperature on the inside of the package has begun to fall in less than 3 hours.

4. **Water Immersion (fissile material packages only)** - Immersion in water to the extent that all portions of the package to be tested are under at least 3 feet of water for a period of not less than 8 hours.

ANNEX 3

TRANSPORT GROUPING OF RADIONUCLIDES

Element[1]	Radionuclides[1]	Group	Element[1]	Radionuclides[1]	Group
Actinium (89)	Ac 227	I	Copper (29)	Cu 64	IV
	Ac 228	I	Curium (96)	Cm 242	I
Americium (95)	Am 241	I		Cm 243	I
	Am 243	I		Cm 244	I
Antimony (51)	Sb 122	IV		Cm 245	I
	Sb 124	III		Cm 246	I
	Sb 125	III	Dysprosium (66)	Dy 154	III
Argon (18)	Ar 37	VI		Dy 165	IV
	Ar 41	II		Dy 166	IV
	Ar 41[3] (uncompressed)	V	Erbium (68)	Er 169	IV
Arsenic (33)	As 73	IV		Er 171	IV
	As 74	IV	Europium (63)	Eu 150	III
	As 76	IV		Eu 152 m	IV
	As 77	IV		Eu 152	III
Astatine (85)	At 211	III		Eu 154	II
Barium (56)	Ba 131	IV		Eu 155	IV
	Ba 133	II	Fluorine (9)	F 18	IV
	Ba 140	III	Gadolinium (64)	Gd 153	IV
Berkelium (97)	Bk 249	I		Gd 159	IV
Beryllium (4)	Be 7	IV	Gallium (31)	Ga 67	III
Bismuth (83)	Bi 206	IV		Ga 72	IV
	Bi 207	III	Germanium (32)	Ge 71	IV
	Bi 210	II	Gold (79)	Au 193	III
	Bi 212	III		Au 194	III
Bromine (35)	Br 82	IV		Au 195	III
Cadmium (48)	Cd 109	IV		Au 196	IV
	Cd 115 m	III		Au 198	IV
	Cd 115	IV		Au 199	IV
Calcium (20)	Ca 45	IV	Hafnium (72)	Hf 181	IV
	Ca 47	IV	Holmium (67)	Ho 166	IV
Californium (98)	Cf 249	I	Hydrogen (1)	H 3 (see tritium)	
	Cf 250	I	Indium (49)	In 113 m	IV
	Cf 252	I		In 114 m	III
Carbon (6)	C 14	IV		In 115 m	IV
Cerium (58)	Ce 141	IV		In 115	IV
	Ce 143	IV	Iodine (53)	I 124	III
	Ce 144	III		I 125	III
Cesium (55)	Cs 131	IV		I 126	III
	Cs 134 m	III		I 129	III
	Cs 134	III		I 131	III
	Cs 135	IV		I 132	IV
	Cs 136	IV		I 133	III
	Cs 137	III		I 134	IV
Chlorine (17)	Cl 36	III		I 135	IV
	Cl 38	IV	Iridium (77)	Ir 190	IV
Chromium (24)	Cr 51	IV		Ir 192	III
Cobalt (27)	Co 56	III		Ir 194	IV
	Co 57	IV	Iron (26)	Fe 55	IV
	Co 58 m	IV		Fe 59	IV
	Co 58	IV	Krypton (36)	Kr 85 m	III
	Co 60	III		Kr 85[3] (uncompressed)	V

Element[1]	Radionuclides[2]	Group
	Kr 85	III
	Kr 85[3] (uncompressed)	VI
	Kr 87	II
	Kr 87[3] (uncompressed)	V
Lanthanum (57)	La 140	IV
Lead (82)	Pb 203	IV
	Pb 210	II
	Pb 212	II
Lutetium (71)	Lu 172	III
	Lu 177	IV
Magnesium (12)	Mg 28	III
Manganese (25)	Mn 52	IV
	Mn 54	IV
	Mn 56	IV
Mercury (80)	Hg 197 m	IV
	Hg 197	IV
	Hg 203	IV
Mixed Fission Products	MFP	II
Molybdenum (42)	Mo 99	IV
Neodymium (60)	Nd 147	IV
	Nd 149	IV
Neptunium (93)	Np 237	I
	Np 239	I
Nickel (28)	Ni 56	III
	Ni 59	IV
	Ni 63	IV
	Ni 65	IV
Niobium (41)	Nb 93 m	IV
	Nb 95	IV
	Nb 97	IV
Osmium (76)	Os 185	IV
	Os 191 m	IV
	Os 191	IV
	Os 193	IV
Palladium (46)	Pd 103	IV
	Pd 109	IV
Phosphorus (15)	P 32	IV
Platinum (78)	Pt 191	IV
	Pt 193	IV
	Pt 193 m	IV
	Pt 197 m	IV
	Pt 197	IV
Plutonium (94)	Pu 238 (F)	I
	Pu 239 (F)	I
	Pu 240	I
	Pu 241 (F)	I
	Pu 242	I
Polonium (84)	Po 210	I
Potassium (19)	K 42	IV
	K 43	III
Praseodymium (59)	Pr 142	IV
	Pr 143	IV
Promethium (61)	Pm 147	IV
	Pm 149	IV

Element[1]	Radionuclides[2]	Group
Protactinium (91)	Pa 230	I
	Pa 231	I
	Pa 233	II
Radium (88)	Ra 223	II
	Ra 224	II
	Ra 226	I
	Ra 228	I
Radon (86)	Rn 220	IV
	Rn 222	II
Rhenium (75)	Re 183	IV
	Re 186	IV
	Re 187	IV
	Re 188	IV
	Re Natural	IV
Rhodium (45)	Rh 103 m	IV
	Rh 105	IV
Rubidium (37)	Rb 86	IV
	Rb 87	IV
	Rb Natural	IV
Ruthenium (44)	Ru 97	IV
	Ru 103	IV
	Ru 105	IV
	Ru 106	III
Samarium (62)	Sm 145	III
	Sm 147	III
	Sm 151	IV
	Sm 153	IV
Scandium (21)	Sc 46	III
	Sc 47	IV
	Sc 48	IV
Selenium (34)	Se 75	IV
Silicon (14)	Si 31	IV
Silver (47)	Ag 105	IV
	Ag 110 m	III
	Ag 111	IV
Sodium (11)	Na 22	III
	Na 24	IV
Strontium (38)	Sr 85 m	IV
	Sr 85	IV
	Sr 89	III
	Sr 90	II
	Sr 91	III
	Sr 92	IV
Sulphur (16)	S 35	IV
Tantalum (73)	Ta 182	III
Technetium (43)	Tc 96 m	IV
	Tc 96	IV
	Tc 97 m	IV
	Tc 97	IV
	Tc 99 m	IV
	Tc 99	IV
Tellurium (52)	Te 125 m	IV
	Te 127 m	IV
	Te 127	IV

Element[1]	Radionuclides[2]	Group
	Te 129 m	III
	Te 129	IV
	Te 131 m	III
	Te 132	IV
Terbium (65)	Tb 160	III
Thallium (81)	Tl 200	IV
	Tl 201	IV
	Tl 202	IV
	Tl 204	III
Thorium (90)	Th 227	II
	Th 228	I
	Th 230	I
	Th 231	I
	Th 232	III
	Th 234	II
	Th Natural	III
Thulium (69)	Tm 168	III
	Tm 170	III
	Tm 171	IV
Tin (50)	Sn 113	IV
	Sn 117	III
	Sn 121	III
	Sn 125	IV
Tritium (1)	H 3	IV
	H 3 (as gas, as luminous paint or absorbed on solid material)	VII
Tungsten (74)	W 181	IV
	W 185	IV
	W 187	IV

Element[1]	Radionuclides[2]	Group
Uranium (92)	U 230	II
	U 232	I
	U 233 (F)	II
	U 234	II
	U 235 (F)	III
	U 236	II
	U 238	III
	U Natural	III
	U Enriched (F)	III
	U Depleted	III
Vandium (23)	V 48	IV
	V 49	III
Xenon (54)	Xe 125	III
	Xe 131 m	III
	Xe 131[3] m (uncompressed)	V
	Xe 133	III
	Xe 133[3] (uncompressed)	VI
	Xe 135	II
	Xe 135[3] (uncompressed)	V
Ytterbium (70)	Yb 175	IV
Yttrium (39)	Y 88	III
	Y 90	IV
	Y 91 m	III
	Y 91	III
	Y 92	IV
	Y 93	IV
Zinc (30)	Zn 65	IV
	Zn 69 m	IV
	Zn 69	IV
Zirconium (40)	Zr 93	IV
	Zr 95	III
	Zr 97	IV

[1] Atomic Number shown in parentheses.
[2] Atomic weight shown after the radionuclide symbol.
[3] Uncompressed means at a pressure not exceeding one atmosphere.
m Metastable state.
(F) Fissile Material.

ANNEX 4

TESTS FOR SPECIAL FORM MATERIAL

1. **Free Drop** A free drop through a distance of 30 feet onto a flat essentially unyielding horizontal surface, striking the surface in such a position as to suffer maximum damage.

2. **Percussion** Impact of the flat circular end of a 1-inch diameter steel rod weighing 3 pounds, dropped through a distance of 40 inches. The capsule or material shall be placed on a sheet of lead, of hardness number 3.5 to 4.5 on the Vickers scale, and not more than 1-inch thick, supported by a smooth essentially unyielding surface.

3. **Heating**-Heating in air to a temperature of 1475°F and remaining at that temperature for a period of 10 minutes.

4. **Immersion**- Immersion for 24 hours in water at room temperature. The water shall be at pH 6 - pH 8, with a maximum conductivity of 10 micromhos per centimeter.

APPENDIX B
LIMITS ON RADIOACTIVE MATERIALS

Appendix B. Limits on Radioactive Materials

This appendix demonstrates how the limits listed in Section 1.0 apply to specific shipments of radioisotopes and spontaneously fissioning materials. For example, assume that reactor-produced ^{244}Cm made by long term irradiation of plutonium is to be shipped. Also assume that the basic fission products have been removed from the material and only the curium fraction and several related impurities remain. A typical analysis of such material might show the curium mass fraction to contain 80% ^{244}Cm, 2% ^{242}Cm, 1/2% ^{245}Cm, 10% ^{246}Cm, 1/2% ^{247}Cm, 5% ^{241}Am, and 2% ^{243}Am. The estimated length of time the capsule will be sealed is 60 d ($5.18 \cdot 10^6$ s). The capsule size, tentatively chosen from Fig. 2, is 139.3 cm^3. The sample density is 10.0 g/cm^3.

To determine the maximum sample mass that can be shipped, one must look at each of the limits.

DECAY POWER

The specific decay power can be determined by multiplying the mass fraction by the maximum decay power (from Table 3). Table B-1 has the result. The maximum shipment mass is

$$G = \frac{\text{Max power}}{\text{Table B-1 total}}$$

$$= \frac{100\ W}{4.8\ W/g}$$

$$= 20.8\ g\ .$$

CRITICALITY

Table B-1 lists the mass ratio of isotopes with potential criticality hazards to the total shipment mass. The maximum shipment mass is

$$G = \frac{\text{Total allowable mass from Section 1.2 or 1.3}}{\text{Table B-1 total}}$$

$$= \frac{15g}{0.01}$$

$$= 1500\ g\ .$$

Table B-1. Sample calculations for radioactive materials.

Isotope	Mass fraction	Power[a] (W/g)	Gas generation rate[a] ($cm^3/s \cdot g$)	Neutron Emission rate[a] (neutrons/s·g)	Mass ratio for critical isotopes
Am-241	0.050	0.006	$0.022 \cdot 10^{-8}$	-	
Am-243	0.020	0.001	-	-	-
Cm-242	0.020	2.448	$9.140 \cdot 10^{-8}$	$3.6 \cdot 10^{5}$	-
Cm-244	0.800	2.336	$9.176 \cdot 10^{-8}$	$93.6 \cdot 10^{5}$	-
Cm-245	0.005	0.001			0.005
Cm-246	0.100	0.001		$5 \cdot 10^{5}$	-
Cm-247	0.005	0.001	-		0.005
TOTAL	1.000	4.8	$18.3 \cdot 10^{-8}$	$10.7 \cdot 10^{6}$	0.010

[a]Based on 1 g of the mixed sample.

RADIATION DOSE RATE

All the isotopes in the shipment primarily emit soft gamma rays (less than 100 keV) that can be ignored. The dose rate in this case will be the result of spontaneous neutron emission. Using the limit of $5 \cdot 10^{8}$ neutrons/s from Section 4.3.1, one gets a maximum shipment mass of

$$G = \frac{\text{Max neutron emission rate}}{\text{Table B-1 total}}$$

$$= \frac{5 \times 10^{8} \text{ neutrons/s}}{10.7 \times 10^{6} \text{ neutrons/s}}$$

$$= 46.7 \text{ g} .$$

GAS GENERATION

Table 3 lists the gas generation rate. Section 4.2.4.2 contains the expression for the maximum gas generation rate.

$$\frac{80.5(V_C - V_S)}{\phi} \geq G \text{ (total from Table B-1).}$$

In this example, the sample density is known but not its volume. However, V_S equals G divided by its density. Substituting the known values,

$$\frac{80.5\left(139.3 - \frac{G}{10}\right)}{5.18 \times 10^6} \geq G\ (18.3 \times 10^{-8})$$

$$G = 1246 \text{ g} .$$

The calculations indicate that the 100-W decay power is the limiting factor in this example. The maximum sample mass that can be shipped is 20.8 g.

APPENDIX C
LIST OF CASK DRAWINGS

List of Cask Drawings

Drawing Title	LLL Number
Neutron shipping cask (12-in. assembly)	AAA68-115679
Shipping cask weldment	AAA68-115681
Plug	AAA68-115631
Lid	AAA68-115647
Capsule-bolted "Conoseal" joint	AAA69-108511 (Aeroquip proprietary)

APPENDIX D
TIEDOWN EQUIPMENT DESIGN LIMITS

Table D-1. Maximum design load for improved plow steel wire rope for package tiedown.[a]

Wire rope diam (in.)	Max design load for improved plow steel (lb)	Wt (lb/ft)	Approx radius of wire rope thimble (in.)
3/8	2,400	0.23	7/8
7/16	3,200	0.31	1
1/2	4,200	0.40	1-3/16
9/16	5,400	0.51	1-7/32
5/8	6,600	0.63	1-3/8
3/4	9,600	0.90	1-5/8
7/8	12,800	1.20	1-13/16
1	16,800	1.60	2

[a]The recommended maximum design load is based on data in CFR (Code of Federal Regulations) 29, Chapter XVII, Section 1926.251(c)(1), Table H-3 (7/1/73).

Table D-2. Welded link-chain working load limit.[a]

Nominal size (in.)	Alloy steel chain ASTM Spec A 391 (lb)	Yield load of load link (lb)
1/4	3,250	—
3/8	6,600	7,300
1/2	11,250	12,500
5/8	16,500	18,200
3/4	23,000	25,300
7/8	28,750	31,700
1	38,750	42,700

[a]The working load limit is based on CFR 29, Chapter XVII, Section 1926.251(b)(4), Table H-1 (7/1/73).

Table D-3. Working load limits for turnbuckles.[a,b]

Wire rope size (in.)	Jaw or eye size (in.)	Load[c] (lb)
3/8	1/2	2,440
7/16	5/8	3,300
1/2	3/4	4,280
9/16	3/4	5,400
5/8	7/8	6,680
3/4	1	9,520
7/8	1-1/4	12,880
1	1-1/4	16,720
	1-1/2	21,000
	1-3/4	31,080
	2	36,800

[a]Derived from Rigger's Handbook, Broderick & Bascom Rope Co. and information from Crosby-Laughlin Co.

[b]Where turnbuckles are used, a jumper shall be installed of equivalent-rated load capacity between the points connected by the turnbuckle. The jumper (e.g., wire rope or chain) shall be of suitable size and configuration to make sure the tiedown assumes the load if the turnbuckle fails. The jumper may be an integral part of the turnbuckle.

[c]Safety factor = 5.

Table D-4. Working load limits for shackles.[a]

Shank (in.)	Load (lb)	Pin (in.)	Inside width (in.)	Inside length (in.)
1/2	2,800	5/8	1/2	1-7/8
5/8	4,400	3/4	5/8	2-5/16
3/4	6,400	7/8	3/4	2-5/8
7/8	8,600	1	7/8	3-3/16
1	11,200	1-1/8	1	3-1/2
1-1/8	13,400	1-1/4	1-1/8	3-15/16
1-1/4	16,400	1-3/8	1-1/4	4-5/8
1-3/8	20,000	1-1/2	1-3/8	4-15/16
1-1/2	23,800	1-5/8	1-1/2	5-1/2
1-3/4	32,400	2	1-3/4	6-5/8
2	42,400	2-1/4	2	7-3/4

[a]The working load limit is based on CFR 29, Chapter XVII, Section 1926.251 (f)(1), Table H-19 (7/1/73).

APPENDIX E
SAMPLE FORM FOR REUSE INSPECTION

REUSE INSPECTION

USA/6166/b(ERDA-SAN)

	Date	Acceptable	Needs work	Initials
1. Check outside and inside of cask and special-form capsule for contamination.				
2. Remove old shipping tags and labels.				
3. Check cask for physical damage or missing parts.				
3.1 Paint				
3.2 Identification plate				
3.3 Lifting and tiedown lugs				
3.4 Cavity drain plug				
3.5 Lid pipe plug				
3.6 Cask relief valve				
3.7 Plug relief valve				
3.8 Plug handle				
3.9 Lid bolts				
3.10 Lid O-ring surface				
3.11 Cask body O-ring groove				
3.12 O-ring				
3.13 Plug shell				
3.14 Cask shell & tapped holes				
3.15 Cask pallet base				
3.16 Other (specify) _____				
4. Check special-form capsule for physical damage or missing parts.				
4.1 Cap screws				
4.2 Cover				
4.3 Body				
4.4 Sealing surfaces (cover & body)				
4.5 Other (specify) _____				
5. Submit this completed checklist to Materials Management, L-435.				

APPENDIX F
SAMPLE FORM FOR LOADING AND HANDLING PROCEDURE

LOADING AND HANDLING PROCEDURE

USA/6166/B(ERDA-SAN)

Date	Initials

1. Establish that the limitations in Section 1.0 will not be exceeded. Log in the values for the following items. See Appendix B for sample calculations.

   1.1 Maximum decay power _____

   1.2 Total mass of fissile isotopes _____

   1.3 Total mass of ^{251}Cf _____

   1.4 Radiation dose rate at surface _____

   1.5 Radiation dose rate at 3 ft (91.4 cm) _____

   1.6 Length of time capsule can be sealed without exceeding gas generation limit _____

2. Check last Reuse Inspection check list for acceptability.

3. Special-Form Capsule loading

   3.1 Verify that cavity is clean and dry.

   3.2 Place radioisotope package in capsule.

   3.3 Install new metal gasket in body sealing recess with gasket cone apex upwards.

   3.4 Install cover.

   3.5 Coat cap screws with graphite powder and insert in body.

   3.6 Tighten the screws evenly and in steps to the following torque:

Size	Torque
0.19 to 32 UNJF	65 to 70 in.-lb
0.25 to 28 UNJF	95 to 100 in.-lb

4. Cask Loading

   4.1 Verify that cavity and drain tube are clean and dry.

   4.2 Clean cask and lid seal surfaces.

   4.3 Install O-ring gasket in groove.

   4.4 Place special-form capsule in cask.

   4.5 Place plug in cask.

   4.6 Place lid in recess on cask top.

   4.7 Coat 0.375-24 UNF bolts with molybedenum disulphide (Lubriband M) and insert in cask body.

   4.8 Torque the bolts evenly and in steps to 240 to 250 in.-lb

	Date	Initials
4.9 Install safety wire through the bolt heads and secure ends with lead seal.		
4.10 Wipe lid and painted surfaces of cask body until clean.		
5. Cask Transportation		
5.1 The cask may be handled by a forklift using the pallet base or by using the lifting lugs.		
5.2 Four drop-forged steel shackles shall be used with the lifting lugs. The pin diameter shall be 0.50 in. or greater.		
6. Cask Tiedown		
6.1 The cask shall be placed on the truck bed longitudinal centerline and tied down to the bed frame, not the wood decking (Fig. F-1).		
6.2 The cask tiedown system shall use drop-forged steel shackles with a pin diameter of 0.63 in.		
6.3 The four tension members securing the cask to the truck bed shall be 0.436 in. diam, 6-by-19-improved-plow-steel wire rope or 0.25-in. steel chain per ASTM A391.		
6.4 The handles of any "breakover" load binders used to tighten chains shall be secured to prevent opening of the binder during transport.		
6.5 Chocks shall be used to prevent the cask from sliding on the truck bed. It is recommended that 1/8-in. diam holes be predrilled in the lumber to prevent splitting when the nails are driven in. Figure F-1 shows the chock and nail sizes, number, and spacing.		
7. Submit this completed checklist to LLL Materials Management, L-435.		

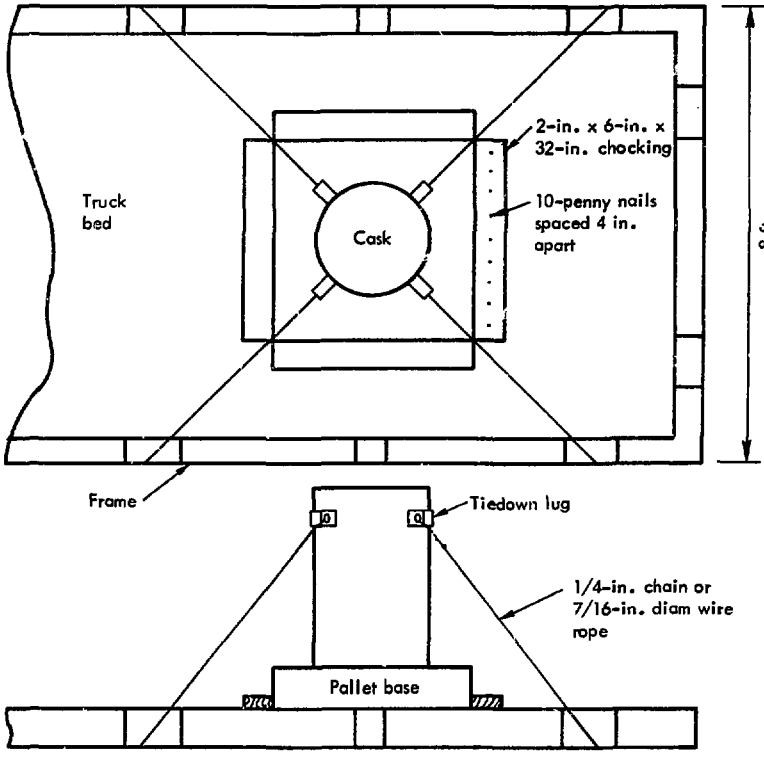

Fig. F-1. Model of cask tied down on truck.