Conf-920706--10

LA-UR-92- 2179

Los Alamos National Laboratory is operated by the University of California for the United States Department of Energy under contract W-7405-ENG-36

TITLE: MEASUREMENT OF AC ELECTRICAL CHARACTERISTICS OF SSC SUPERCONDUCTING DIPOLE MAGNETS

AUTHOR(S): Robert E. Shafer (LANL)
Kay Smedley (SSC)

LA-UR--92-2179

DE92 018888

SUBMITTED TO: XVth International Conference on High Energy Accelerators
Congress Centrum
Hamburg, Germany
July 20-24, 1992

DISCLAIMER

This report was prepared as an account of work sponsored by an agency of the United States Government. Neither the United States Government nor any agency thereof, nor any of their employees, makes any warranty, express or implied, or assumes any legal liability or responsibility for the accuracy, completeness, or usefulness of any information, apparatus, product, or process disclosed, or represents that its use would not infringe privately owned rights. Reference herein to any specific commercial product, process, or service by trade name, trademark, manufacturer, or otherwise does not necessarily constitute or imply its endorsement, recommendation, or favoring by the United States Government or any agency thereof. The views and opinions of authors expressed herein do not necessarily state or reflect those of the United States Government or any agency thereof.

Received OSTI
AUG 0 5 1992

By acceptance of this article, the publisher recognizes that the U.S. Government retains a nonexclusive, royalty-free license to publish or reproduce the published form of this contribution, or to allow others to do so, for U.S. Government purposes.

The Los Alamos National Laboratory requests that the publisher identify this article as work performed under the auspices of the U.S. Department of Energy.

Los Alamos

Los Alamos National Laboratory
Los Alamos, New Mexico 87545

FORM NO. 836 R4
ST NO 2629 5/81

MASTER

DISTRIBUTION OF THIS DOCUMENT IS UNLIMITED

DISCLAIMER

This report was prepared as an account of work sponsored by an agency of the United States Government. Neither the United States Government nor any agency Thereof, nor any of their employees, makes any warranty, express or implied, or assumes any legal liability or responsibility for the accuracy, completeness, or usefulness of any information, apparatus, product, or process disclosed, or represents that its use would not infringe privately owned rights. Reference herein to any specific commercial product, process, or service by trade name, trademark, manufacturer, or otherwise does not necessarily constitute or imply its endorsement, recommendation, or favoring by the United States Government or any agency thereof. The views and opinions of authors expressed herein do not necessarily state or reflect those of the United States Government or any agency thereof.

DISCLAIMER

Portions of this document may be illegible in electronic image products. Images are produced from the best available original document.

MEASUREMENT OF AC ELECTRICAL CHARACTERISTICS OF SSC SUPERCONDUCTING DIPOLE MAGNETS

KEYUE M. SMEDLEY
Superconducting Super Collider Laboratory
Dallas, TX 75237, USA

and

ROBERT E. SHAFER
Los Alamos National Laboratory
Los Alamos, NM 87545, USA

Abstract

Experiments were conducted to measure the AC electrical characteristics of SSC superconducting dipole magnets over the frequency range of 0.1 Hz to 10 kHz. A magnet equivalent circuit representing the magnet DC inductance, eddy current losses, coil-to-ground and turn-to-turn capacitance, was synthesized from the experimental data. This magnet equivalent circuit can be used to predict the current ripple distribution along the superconducting magnet string and can also provide dynamic information for the design of the collider current regulation loop.

1 Introduction

The SSC collider is designed to have a circumference of 87 km. The superconducting magnets along the collider ring are grouped into ten sectors. Each sector, a string of average length of 8.7km, is powered by one power source located near the center of the sector. Due to the AC electrical characteristics of the magnets, the magnet string behaves like a transmission line; the ripple currents and transients from the power supply form a time and space distribution along the magnet string. Additionally, since the power supply load is a magnet string, the design of the current regulation loop is highly dependent upon the AC electrical characteristics of the magnets.

In order to understand the ripple effect on the particle beam motion and assist the current regulation loop design, it is necessary to accurately determine the AC electrical characteristics of superconducting magnets. This paper develops a method of measuring the AC characteristics and obtaining a magnet equivalent circuit of superconducting magnets. The measurement method and the circuit synthesis technique are detailed in Section 2; magnet testing experiments are shown in Section 3; and a summary is given in Section 4.

[1]This work is supported by Universities Research Association Inc. and U.S. Department of Energy.

2 Measurement Method

A typical superconducting dipole magnet includes a beam tube, a superconducting coil, four heater strips, a laminated collar, a laminated iron yoke, and a cryogenic shell. When the magnet is superconducting, the DC resistivity of the coil disappears; therefore, the magnet behaves like a pure inductor at low frequencies. If the magnet current contains AC components, however, it will induce eddy currents in the beam tube, magnet coil, and other metallic components; the magnet will show some resistivity. A high frequency resonance occurs between the magnet inductance and coil-to-ground and turn-to-turn capacitance. The AC electrical characteristics of the magnet are therefore frequency dependent.

2.1 Magnet Equivalent Circuit

The eddy current phenomenon of the beam tube can be analyzed by a coupled inductor circuit shown in Fig. 1. The primary inductance L_1 represents the n turn superconducting coil; the secondary inductance L_2 represents the one turn eddy current path in the beam tube; and R_b represents the beam tube resistance. Suppose the mutual inductance is M and the coupling coefficient is $\sqrt{k} = \frac{M}{\sqrt{L_1 L_2}}$. The circuit equations are derived as:

$$v_1 = sL_1 i_1 - sMi_2 , \quad (1)$$

$$R_b i_2 = sMi_1 - sL_2 i_2 . \quad (2)$$

The voltage and current relationship of the primary winding are found from the circuit equations:

$$z = \frac{v_1}{i_1} = sL_1 - sM\frac{sM}{R_b + sL_2} . \quad (3)$$

Let $L = L_1$, $L_2 = \frac{kL}{n^2}$, and $R = n^2 R_b$ and reorganize the impedance function,

$$z = sL(1-k) + \frac{skLR}{R + skL} \ . \tag{4}$$

Further, with coil-to-ground and turn-to-turn capacitance taken into account, a magnet equivalent circuit is obtained as shown in Fig. 2. The impedance of the magnet equivalent circuit is

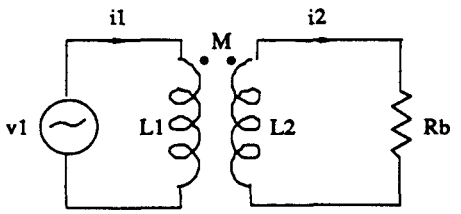

Figure 1: Eddy Current Circuit

$$z \approx \frac{sL(1 + \frac{s}{R/(k(1-k)L)})}{(1 + \frac{s}{R/(kL)})(1 + \frac{R(C+C_1)}{4}s + (1-k)\frac{L(C+C_1)}{4}s^2)} \ . \tag{5}$$

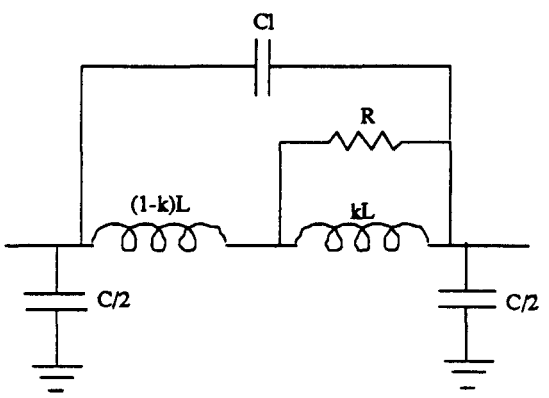

Figure 2: Magnet Equivalent Circuit

2.2 *Impedance Measurement*

An HP network analyzer (HP 3563A) is used to produce a swept frequency signal in the frequency range from 0.1Hz to 10kHz. A Kepco power amplifier (BOP 36-12M) is used to boost the current level (peak-peak 36V, 12A) of the swept signal in order to achieve high measurement precision. The output of the amplifier is connected to the two terminals of the coil through an external resistance. The voltage v, across the magnet terminals, and the current i, through the external resistor of 1Ω (1% precision and very low inductance), were measured by the network analyzer to generate the series impedance transfer function. The series impedance measurement circuit is shown in Fig. 3. To measure the shunt impedance between the magnet and ground, the two terminals of the magnet are shorted. The output of the amplifier is connected across the shorted coil and ground through an external resistance. The voltage v from coil to ground and the current i through the resistor are measured to generate the shunt impedance transfer function. The measurement data are frequency response traces. Curve fitting techniques are used to derive a linear system model from the measurements. The pole/zero model is determined by calculating the least-squares fit of the frequency response data to the linear system model. The model has the following form:

$$z = \frac{As(1 + s/\omega_2)}{(1 + s/\omega_1)(1 + s/Q\omega_3 + s^2/(\omega_3^2))} \ . \tag{6}$$

The circuit parameters L, R, k and C can be determined

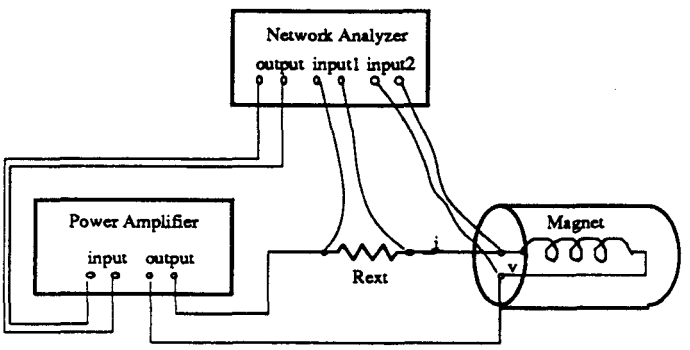

Figure 3: Series Impedance Measurement Circuit

by comparing the predicted impedance function (5) and the measured impedance function (6),

Often, the measured impedance transfer function may have some additional poles and zeros due to eddy currents in other metallic components; therefore, it may be necessary to adjust the equivalent circuit according to the understanding of the magnet properties.

3 Magnet Tests

Superconducting magnet DCA 208, 50mm aperture, 15m length, was tested in Brookhaven National Lab at $4.2^o K$. A transfer function impedance model is derived from the cold dipole DCA 208 measurement data by curve-fitting:

$$z = \frac{0.0657s(1 + \frac{s}{2\pi 48})(1 + \frac{s}{2\pi 588})(1 + \frac{s}{2\pi 9723} + \frac{s^2}{(2\pi 13324)^2})}{(1 + \frac{s}{2\pi 38})(1 + \frac{s}{2\pi 287})(1 + \frac{s}{2\pi 1338} + \frac{s^2}{(2\pi 2025)^2})(1 + \frac{s}{2\pi 6743})} \tag{7}$$

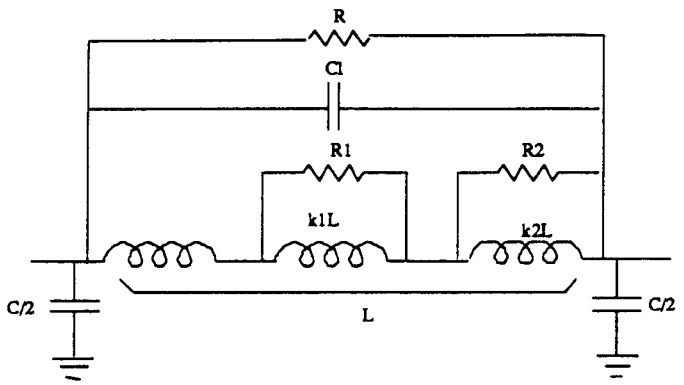

Figure 4: Synthesized Magnet Equivalent Circuit

The curve-fitting impedance function has some additional poles and zeros. Since the frequency bandwidth of the magnet string system is below 1kHz, the pole at 6.7kHz and and zeros at 13kHz are neglected. The impedance circuit model is simplified to:

$$z = \frac{0.0657s(1+\frac{s}{2\pi 48})(1+\frac{s}{2\pi 588})}{(1+\frac{s}{2\pi 38})(1+\frac{s}{2\pi 287})(1+\frac{s}{2\pi 1338}+\frac{s^2}{(2\pi 2025)^2})} . \quad (8)$$

A circuit shown in Fig. 4 is synthesized from the impedance function (8). The existence of the additional pole at 38Hz and the additional zero at 48Hz might be due to eddy current in the collar or the iron yoke. This model matches the measurement data very closely at low frequencies. Some discrepancies at high frequency are introduced by dropping the high frequency pole and zeros. The measured trace and the trace generated by the synthesized circuit are plotted in Fig. 5. The parameters calculated from the transfer function are $L = 65.6mH$, $R = 273.5\Omega$, $k_1 = 0.207$, $R_1 = 3.3\Omega$, $k_2 = 0.317$, $R_2 = 45.6\Omega$, $C1 = 74nF$, $C = 898nF$. The shunt capacitance between the coil and ground is unusually large, which is due to the external circuitry connected to the magnet. Shunt impedance measurements of magnet DCA 207 (warm at Brookhaven) and magnet DCA 318 (cold at Fermi Lab) suggest a modification of the coil-to-ground capacitance of $C = 280nF$.

4 Summary

The frequency dependent AC electrical characteristics were measured using network analyzer. Curve fitting is used to find the transfer function of the magnet impedance from the measured data. The electrical circuit model is obtained by synthesis of the transfer function. The circuit model reveals the information of the magnet inductance, eddy current resistance, coil-to-ground and turn-to-turn capacitance. The AC characteristics of magnets

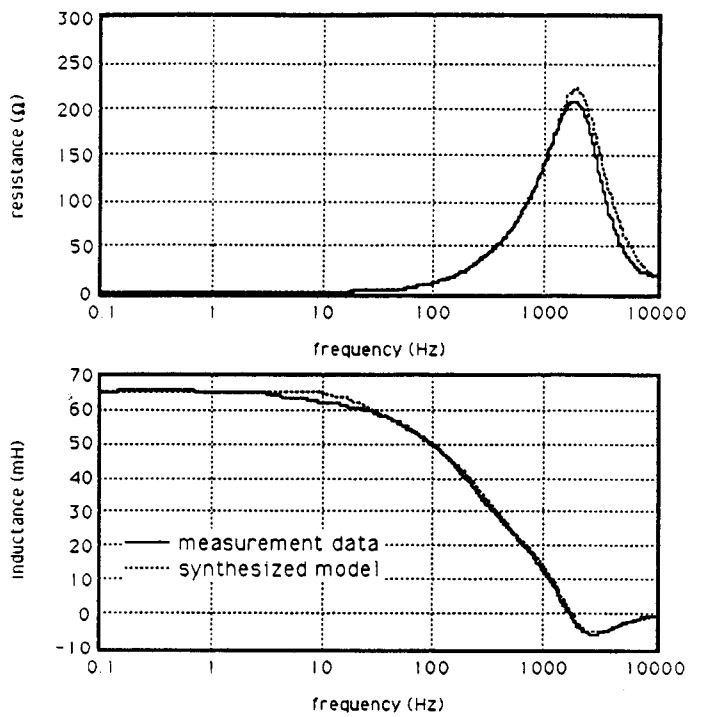

Figure 5: Adjusted Curve Fitting to the Measured Impedance Data of Cold Dipole DCA 208

can be used to predict the ripple distribution of superconducting magnet strings. The AC characteristics of the magnets can also provide dynamic information for the design of the collider current regulation loop. This measurement method shows great promise as a standard method for testing all the SSC superconducting magnets, due to its high accuracy, excellent repeatability, and ease of use.

Acknowledgement

The authors would like to thank Al Mendoza and Gerry Tool for their contribution in the experiments. Credit is also due to the staff members in Accelerator Detector Department of Brookhaven National Lab and Magnet Test Lab. of Fermi Lab. for their support.

References

[1] R. Shafer, "Eddy Current, Dispersion Relations, and Transient Effects in Superconducting Magnets", *IEEE Transaction on Magnets,* **Vol. MAG-17, NO.1**, January, 1981.