27
10-25-77
25 to NTIS

SAND77-1088

Unlimited Release

3151

MASTER

User/Programmer Guide for UCMD64 Dumping Drawing Files to Tape

Donald K. Robbins, William C. Burd

Prepared by Sandia Laboratories, Albuquerque, New Mexico 87115
and Livermore, California 94550 for the United States Energy Research
and Development Administration under Contract AT(29-1)-789

Printed July 1977

Sandia Laboratories

SF 2900 Q(7-73)

DISTRIBUTION OF THIS DOCUMENT IS UNLIMITED

DISCLAIMER

This report was prepared as an account of work sponsored by an agency of the United States Government. Neither the United States Government nor any agency Thereof, nor any of their employees, makes any warranty, express or implied, or assumes any legal liability or responsibility for the accuracy, completeness, or usefulness of any information, apparatus, product, or process disclosed, or represents that its use would not infringe privately owned rights. Reference herein to any specific commercial product, process, or service by trade name, trademark, manufacturer, or otherwise does not necessarily constitute or imply its endorsement, recommendation, or favoring by the United States Government or any agency thereof. The views and opinions of authors expressed herein do not necessarily state or reflect those of the United States Government or any agency thereof.

DISCLAIMER

Portions of this document may be illegible in electronic image products. Images are produced from the best available original document.

Issued by Sandia Laboratories, operated for the United States Energy Research & Development Administration by Sandia Corporation.

NOTICE

This report was prepared as an account of work sponsored by the United States Government. Neither the United States nor the United States Energy Research & Development Administration, nor any of their employees, nor any of their contractors, subcontractors, or their employees, makes any warranty, express or implied, or assumes any legal liability or responsibility for the accuracy, completeness or usefulness of any information, apparatus, product or process disclosed, or represents that its use would not infringe privately owned rights.

SF 1004-DF (3-75)

PAGES 1 to 2

WERE INTENTIONALLY

LEFT BLANK

SAND77-1088
Unlimited release
Printed July 1977

User/Programmer Guide for UCMD 64 Dumping Drawing Files to Tape

Donald K. Robbins
William C. Burd
Computer Aids System Development Division 9624
Sandia Laboratories
Albuquerque, NM 87115

ABSTRACT

This document describes program UCMD 64 -- an Applicon AGS/870/880 User Command for selectively dumping drawing files onto magnetic tape, using an Applicon System.

Printed in the United States of America
Available from
National Technical Information Services
U. S. Department of Commerce
5285 Port Royal Road
Springfield, VA 22161
Price: Printed Copy $4.00; Microfiche $3.00

NOTICE
This report was prepared as an account of work sponsored by the United States Government. Neither the United States nor the United States Energy Research and Development Administration, nor any of their employees, nor any of their contractors, subcontractors, or their employees, makes any warranty, express or implied, or assumes any legal liability or responsibility for the accuracy, completeness or usefulness of any information, apparatus, product or process disclosed, or represents that its use would not infringe privately owned rights.

DISTRIBUTION OF THIS DOCUMENT IS UNLIMITED

CONTENTS

		Page
1.0	Introduction	7
2.0	Execution Instructions	7
2.1	Input	7
2.2	Output	8
2.3	Operating Procedure	8
2.4	Error Messages	8
2.5	Bail out	8
2.6	Example	8
3.0	UCMD 64 Program Documentation	15
3.1	Documentation Guidelines	15
3.2	Date of Documentation	15
3.3	Name of Program	15
3.4	Name of Author of Program	15
3.5	Name of Program Administrator	15
3.6	Date Program was Completed	15
3.7	Brief Description of Program	15
3.8	Full Narrative Description of Program	16
3.8.1	General	16
3.8.2	Initialization	16
3.8.3	Options	16
3.8.3.1	'O'ption	17
3.8.3.2	'Z'ero	17
3.8.3.3	Default	17
3.8.3.4	'A'll	17
3.8.3.5	'I'nspect	17
3.8.3.6	'R'ead	17
3.8.3.7	'S'elect	17
3.8.3.8	'T'erminate	17
3.8.4	Initialize File Structure	17
3.8.5	User	17
3.8.6	File Name	17
3.8.7	Tape Write	18
3.8.8	EOJ	18
3.8.9	Subroutines	18
3.9	Hardware Configuration Required	18
3.10	Language Used	19
3.11	Operation System Used	19
3.12	Type of Program	19
3.13	Special Routines Used	19
3.14	Form of Program	19
3.15	Files	20
3.16	Program Flow Chart	21
3.17	Program Listing	24
3.18	Backup Capability	24
4.0	Record of Changes to the Program	24
5.0	Key Words	24
6.0	References	25
7.0	Distribution	26

1.0 Introduction

The Applicon Graphics System (AGS) provides the capability for dumping user files to magnetic tape. This dump can consist of 1) all the contents of the disc, 2) all the files of a user, 3) a particular file. UCMD 64 allows all the files, created after a given date, to be dumped. As such it is an additional capability to that already in the system. UCMD 64 also allows an inspection (without dumping) of all files on a disc.

2.0 Executing Instructions

The Applicon Graphics System (AGS) provides a mechanism for dumping files to magnetic tape using FCPY. UCMD 64 permits all files of a system to be dumped, or alternatively, only those files created after a given date. Sandia has dumped all files nightly as a backup precaution. UCMD 64 will permit the dumping of only the active files.

2.1 Input

UCMD 64 is executed from an AGS activity with a graphics display and keyboard or from an activity with a DECwriter. The DECwriter is preferred because a hard-copy record is made of the files dumped. It can be done from the graphics display also.
Several options are selectable from the keyboard. The options are selected by a single letter <CR>. The options are

a. 'O'ption — This lists the options available.

b. 'Z'ero — This zeros out the magnetic tape (writes three EOF at the beginning of the tape). If this is not used, the files will be appended at the end of the files already on tape.

c. 'I'nspect — This allows an inspection of all the files on the disc. A magnetic tape is not used (or needed).

d. 'A'll — This dumps all of the files to the magnetic tape.

e. 'R'eads — This option selectively reads only the files created after a given date. The date desired is entered from the keyboard in the form MO-DA-YR.

f. 'S'elects — This option selects after the tape is zero'd and writes out as in option 'R'.

f. 'T'erminate — This option terminates UCMD 64.

2.2 Output

The execution messages produced by UCMD 64 start with the initial prompting message to allow the user to select the appropriate option. All input is echoed back to verify what the computer sees. If an illegal option is selected, or a date in an improper form is entered, then this is noted, along with the opportunity to retry.

The magnetic tape file created will be under the [Group,User] of the person running UCMD 64.

2.3 Operation Procedure

UCMD 64 should be loaded and executed from the CTRL mode. If the 'S'elective or 'R'ead or 'A'll option is being used, a magnetic tape should be loaded (ring in) and the tape drive dialed to Unit 0. Once execution is started, the user is guided by the messages outputted by the program.

2.4 Error Messages

During development of UCMD 64 several print statements were incorporated to trace its execution through the various functions described in Chapter 8 of the Macro Interface Manual (Ref a.).

Each of these functions produces an error number. When this error number is non-zero it is printed with the function name.

2.5 Bail out

It is possible to bail out at a proper stage of the execution of the program by lifting Switch 0. This completes the file currently being written and returns to the option selector. A keyboard message is displayed. SW 0 should be down before attempting to rerun. Also in the date entering phase when using the 'S' or 'R' options, an 'A' typed when the date is requested will return to the option selector.

2.6 Example

```
UCMD 64;   UCMD 64;
 USER COMMAND 64 -- VERSION 1.1
 FILE BACK-UP AND/OR INSPECT

 NEXT ENTRY IS A ONE CHARACTER OPTION. CHOICES ARE:
                        Z,A,I,O,R,S,T
 'O' GIVES OPTIONS AVAILABLE OR CAN GO RIGHT INTO OTHER OPTIONS

P;                                    . Improper Option

 OPTION SELECTED WAS 'P'

 IMPROPER OPTION SELECTED P


 NEXT ENTRY IS A ONE CHARACTER OPTION. CHOICES ARE:
                        Z,A,I,O,R,S,T
 'O' GIVES OPTIONS AVAILABLE OR CAN GO RIGHT INTO OTHER OPTIONS

O;


 OPTION SELECTED WAS 'O'


 THE OTHER OPTIONS ARE:
       'Z'  OPTION
            THIS OPTION 'Z'EROS OUT THE MAG TAPE FOR
            INITIALIZATION. ANY PRIOR INFORMATION WILL
            BE LOST.
       'I'  OPTION
            THIS OPTION 'I'NSPECTS THE DISC AS TO ITS
            CONTENTS.  NO INFORMATION IS WRITTEN TO TAPE,
            AND NO TAPE IS NEEDED.
       'R'  OPTION
            THIS OPTION 'R'EADS SELECTED USER FILES
            FROM DISC AND WRITES THEM TO TAPE IF THEIR
            CREATION DATE IS LATER THAN OR EQUAL TO THE
            DATE ENTERED FROM THE KEYBOARD,
       'S'  OPTION
            THIS OPTION ZERO'S THE TAPE THEN GOES TO 'R'
       'A'  OPTION
            THIS OPTION DUMPS 'A'LL THE DISC TO MAG TAPE
       'T'  OPTION
            THIS OPTION 'T'ERMINATES UCMD 64


NEXT ENTRY IS A ONE CHARACTER OPTION. CHOICES ARE:
                        Z,A,I,O,R,S,T
'O' GIVES OPTIONS AVAILABLE OR CAN GO RIGHT INTO OTHER OPTIONS
```

A:

A11

OPTION SELECTED WAS 'A'

#########0#########0#########0##
USER COMMON,COMMON

	BLKS	STORED DATE	WRITTEN DATE	TIME
COMMTEST	1	4/ 6/77	6/27/77	8:20:24
I0100.TEST	194	4/ 6/77		
I070.3	26	4/ 6/77		
UCMD65-TEST-27-MAY	81	4/ 6/77		
I04.2	12	4/ 6/77		
UCMD63.1.1	36	4/ 6/77		
UCMD65.1	40	4/ 6/77		
GETTYNOTES	3	4/ 6/77		
NOTES	1	4/ 6/77		
AFIL1	3	4/ 6/77		
TEXTJCL2	1	4/ 6/77		
TEXT-TEST	29	4/ 6/77		
UCMD42.1	11	4/ 6/77		
UCMD62.1	9	4/ 6/77		
I071.4	52	4/ 6/77		
FORMATS.5	100	4/ 6/77		
UCMD66.1	36	4/ 6/77		
TEXTJCL1	1	4/ 6/77		
AFIL3	1	4/ 6/77		
PWBTEXT	1	4/ 6/77		
DD325500T	17	4/ 6/77		
UCMD67.MSL	18	4/ 6/77		
COMMTESTEND	1	4/ 6/77		
I09	4	4/ 6/77		
U297ADA-A.BAK	19	4/ 6/77		
U297ADA-A	19	4/ 6/77		
PTNOTES	3	4/ 6/77		
UCMD67.MSL.V2	18	4/ 6/77		
TEXT	1	4/ 6/77		
UCMD60.1	18	4/ 6/77		
GETTY	3	4/ 6/77		
UCMD102.1	36	4/ 6/77		
UCMD65.TEST	81	4/ 6/77		
UCMD67.1	18	4/ 6/77		
GOLF	1	4/ 6/77		
LMOETTY	3	4/ 6/77		
USERS	1	4/ 6/77		

#########0#########0#########0##
USER K,W

	BLKS	STORED DATE	WRITTEN DATE	TIME
GERB-IN-PWB1	32	4/ 6/77	6/27/77	8:24:12
HMC-60	46	4/ 6/77		
UCMD41.1	32	4/ 6/77		
UCMD52.1	4	4/ 6/77		
PWB1	89	4/ 6/77		
TEST-HMC	64	4/ 6/77		
GERB-IN-HMC1	78	4/ 6/77		
UCMD47.3				

SW 0 ON

I;

Inspect

OPTION SELECTED WAS 'I'

#########0#########0#########0##
USER COMMON,COMMON

	BLKS	STORED DATE	WRITTEN DATE	TIME
COMMTEST	1	4/ 6/77		
IO100.TEST	194	4/ 6/77		
IO70.3	26	4/ 6/77		
UCMD65-TEST-27-MAY	81	4/ 6/77		
IO4.2	12	4/ 6/77		
UCMD63.1.1	36	4/ 6/77		
UCMD65.1	40	4/ 6/77		
GETTYNOTES	3	4/ 6/77		
NOTES	1	4/ 6/77		
AFIL1	3	4/ 6/77		
TEXTJCL2	1	4/ 6/77		
TEXT-TEST	29	4/ 6/77		
UCMD42.1	11	4/ 6/77		
UCMD62.1	9	4/ 6/77		
IO71.4	52	4/ 6/77		
FORMATS.5	100	4/ 6/77		
UCMD66.1	36	4/ 6/77		
TEXTJCL1	1	4/ 6/77		
AFIL3	1	4/ 6/77		
PWBTEXT	1	4/ 6/77		
DD325500T	17	4/ 6/77		
UCMD67.MSL	18	4/ 6/77		
COMMTESTEND	1	4/ 6/77		
IO9	4	4/ 6/77		
U297ADA-A.BAK	19	4/ 6/77		
U297ADA-A	19	4/ 6/77		
PTNOTES	3	4/ 6/77		
UCMD67.MSL.V2	18	4/ 6/77		
TEXT	1	4/ 6/77		
UCMD60.1	18	4/ 6/77		
GETTY	3	4/ 6/77		
UCMD102.1	36	4/ 6/77		
UCMD65.TEST	81	4/ 6/77		
UCMD67.1	18	4/ 6/77		
GOLF	1	4/ 6/77		
LMGETTY	3	4/ 6/77		
USERS	1	4/ 6/77		

#########0#########0#########0##
USER K,W

	BLKS	STORED DATE	WRITTEN DATE	TIME
GERB-IN-PWB1	32	4/ 6/77	6/27/77	7:35:56
HMC-60	46	4/ 6/77		
UCMD41.1	32	4/ 6/77		
UCMD52.1	4	4/ 6/77		
PWB1	89	4/ 6/77		
TEST-HMC	64	4/ 6/77		
GERB-IN-HMC1	78	4/ 6/77		
UCMD47.3	32	4/ 6/77		

A;

All

```
 OPTION SELECTED WAS 'A'

##########0##########0##########0##
USER COMMON,COMMON
                                                  STORED      WRITTEN
                                          BLKS     DATE      DATE      TIME
COMMTEST                                     1    4/ 6/77
IO100.TEST                                 194    4/ 6/77
IO70.3                                      26    4/ 6/77
UCMD65-TEST-27-MAY                          81    4/ 6/77
IO4.2                                       12    4/ 6/77
UCMD63.1.1                                  36    4/ 6/77
UCMD65.1                                    40    4/ 6/77
 ABOVE FILE WILL BE ON NEXT TAPE
 PLS MOUNT NEW TAPE. TYPE 'R' WHEN READY
 S;

 READY S
 WRONG RESPONSE, TRY AGAIN
R;

 READY R

IO ERROR - TYPE A TO ABORT OR C TO CONTINUE.
 NEXT TAPE ZERO'D
UCMD65.1                                    40    4/ 6/77
GETTYNOTES                                   3    4/ 6/77
NOTES                                        1    4/ 6/77
AFIL1                                        3    4/ 6/77
TEXTJCL2                                     1    4/ 6/77
TEXT-TEST                                   29    4/ 6/77
UCMD42.1                                    11    4/ 6/77
UCMD62.1                                     9    4/ 6/77
IO71.4                                      52    4/ 6/77
FORMATS.5                                  100    4/ 6/77
UCMD66.1                                    36    4/ 6/77
TEXTJCL1                                     1    4/ 6/77
AFIL3                                        1    4/ 6/77
PWBTEXT                                      1    4/ 6/77
DD325500T                                   17    4/ 6/77
UCMD67.MSL                                  10    4/ 6/77
COMMTESTEND                                  1    4/ 6/77
IO9                                          4    4/ 6/77
U297ADA-A.BAK                               19    4/ 6/77
U297ADA-A                                   19    4/ 6/77
PTNOTES                                      3    4/ 6/77
UCMD67.MSL.V2                               18    4/ 6/77
TEXT                                         1    4/ 6/77
UCMD60.1                                    18    4/ 6/77
GETTY                                        3    4/ 6/77
UCMD102.1                                   36    4/ 6/77
UCMD65.TEST                                 81    4/ 6/77
UCMD67.1
 SW 0 ON
```

Tape Full

C Tape Not Ready

```
S;

 OPTION SELECTED WAS 'S'

 TAPE ZERO'D
 PLS ENTER BACKUP DATE IN FORM MO-DA-YR
06-01-76;

DATE TYPED 06-01-76
 Y IF OK, N TO RETYPE
N;

 RESPONSE WAS N
 PLS ENTER BACKUP DATE IN FORM MO-DA-YR
06/01/77;

DATE TYPED 06/01/77
 WRONG FORMAT FOR DATE - TRY AGAIN
 PLS ENTER BACKUP DATE IN FORM MO-DA-YR
06-01-77;

DATE TYPED 06-01-77
 Y IF OK, N TO RETYPE
Y;

 RESPONSE WAS Y
 MO =  6, DAY =  1, YR = 77
 DATE OF DUMP IS  6/27/77 THIS IS  MON

#########0#########0#########0##
USER D,R
                                                STORED      WRITTEN
                                        BLKS     DATE      DATE      TIME
UCMD81.1                                  36    6/ 9/77   6/27/77   8:19:22
UCMD82.1                                  36    6/21/77
UCMD84.1                                  36    6/ 8/77
UCMD64.1                                  36    6/24/77

 NEXT ENTRY IS A ONE CHARACTER OPTION. CHOICES ARE:
                    Z,A,I,O,R,S,T
 'O' GIVES OPTIONS AVAILABLE OR CAN GO RIGHT INTO OTHER OPTIONS
```

Z:

```
OPTION SELECTED WAS 'Z'

TAPE ZERO'D

NEXT ENTRY IS A ONE CHARACTER OPTION. CHOICES ARE:
                    Z,A,I,O,R,S,T
'O' GIVES OPTIONS AVAILABLE OR CAN GO RIGHT INTO OTHER OPTIONS
```

A:

```
OPTION SELECTED WAS 'A'

#########0#########0#########0##
USER COMMON,COMMON
                                                STORED      WRITTEN
                                        BLKS     DATE      DATE      TIME
COMMTEST                                   1    4/ 6/77   6/27/77   8:15:27
IO100.TEST                               194    4/ 6/77
IO70.3                                    26    4/ 6///
UCMD65-TEST-27-MAY                        81    4/ 6/77
IO4.2                                     12    4/ 6/77
UCMD63.1.1                                36    4/ 6/77
UCMD65.1                                  40    4/ 6/77
GETTYNOTES                                 3    4/ 6/77
NOTES                                      1    4/ 6/77
AFIL1
 SW 0 ON
```

Bail Out

```
NEXT ENTRY IS A ONE CHARACTER OPTION. CHOICES ARE:
                    Z,A,I,O,R,S,T
'O' GIVES OPTIONS AVAILABLE OR CAN GO RIGHT INTO OTHER OPTIONS
```

T:

Terminate

```
OPTION SELECTED WAS 'T'

END OF UCMD 64
```

3.0 UCMD 64 Program Documentation

3.1 Documentation Guidelines

This manual documents program UCMD 64 per "Guidelines for 9624 System Program Documentation," dated January 15, 1975.

3.2 Date of Documentation

July 1977

3.3 Name of Program

UCMD 64

3.4 Name of Authors of Program

W. C. Burd - 9624
D. K. Robbins - 9624

3.5 Name of Program Administrator

Nancy Nelson - 9621

3.6 Date Program was Completed

July 1977

3.7 Brief Description of Program

UCMD 64 contains several file dumping options. One option dumps 'A'll of the files from disc to magnetic tape. Provision is made for overflow to another tape if needed.
Another option for which UCMD 64 will be chiefly used, is to 'S'electively write out files created after a given date. This date is entered from the keyboard.
UCMD 64 also has an 'I'nspect option to permit a look at all the files on a disc.

3.8 Full Narrative Description of Program

3.8.1 General

UCMD 64 is written in the BCPL Programming Language

The source code was developed on the HP 2644A terminal
This video interactive terminal permits easy editing of existing code, so the program is highly commented.

Because of the number of messages in the program (which causes a STATIC table overflow in the BCPL compiler), the program is separated into 4 segments. These are indicated by a single period on a line by itself. The global entities used by each segment must be declared.

3.8.2 Initialization

The program starts with a comment block as to what is afoot and with references to (Ref a.) for intimate details for the included file manipulation routines. This is followed by declaring the globals and variables used. The files AGSLIB.HDR and FILDEF.HDR are obtained with the GET command. These 2 files contain global declarations for the BCPL support library. Cells 1 thru 139 are accounted for by these globals. The subroutines used by UCMD 64 are setup in cells 140 thru 149.
The STATIC statements reserve locations for the various variables used in the program. SW is one of the variables which is set by the options chosen for communication with the subsequent parts of the program. It is initialized to 0 and can be a 1 (indicating 'I'nspection) or 2 (indicating 'S'election). Vectors are set up for the variables which need vectors. These vectors fall into four categories

a) Device Blocks (tape or disc)
b) File Data Blocks (FDB) (tape or disc)
c) Buffers (tape or disc)
d) I/O buffers (keyboard)

Also the function, SYSTEM.DISK.NAME, returns the type of disc with which the system is equipped. This is contained in the cell DP.

3.8.3 Options

Next, the program writes out a message to the user identifying itself (UCMD 64) and also lists the different options which are available. The options are 'O'ption, 'A'll, 'Z'ero, 'I'nspect, 'S'elect, 'R'ead, 'T'erminate. The first character of one of the above is entered from the keyboard followed by a <CR>.
This is accepted by the routine GETSTRING, packed by PACKSTRING, and listed out to the user. The option selected then goes into a multi-branch switch construct (SWITCHON) of BCPL. If any other character other than one of the above is typed, then the DEFAULT CASE rejects it and then returns to 3.8.3 for another try.

3.8.3.1 'O'ption

This CASE calls out the subroutine OPTION.MESS and then returns to 3.8.3

3.8.3.2 'Z'ero

This CASE zeros out the magnetic tape and returns to 3.8.3

3.8.3.3 Default

Any other character ends up here. A message is written to the user and control returns to 3.8.3

3.8.3.4 'A'll

Control transfers to 3.8.4

3.8.3.5 'I'nspect

SW=1 is set and control transfers to 3.8.4

3.8.3.6 'R'ead

SW=2 is set, and dialogue is initiated with the user to determine the date to be used in the selective file dump. This date is stored in cell DAT2 in the form YRMODA. Control is then transferred to 3.8.4

3.8.3.7 'S'elect

The disc is read and the tape zero'd and then control is transferred to 3.8.3.6

3.8.3.8 'T'erminate

Control is transferred to the EOJ at 3.8.8

3.8.4 Initilize File Structure

The disc is initialized and the mag tape also unless SW=1.

3.8.5 User

The USER is read from the disc after the FDB has been properly setup. The user is printed by PRINTUSER.

3.8.6 File Name

The file name is read from the disc. The date of creation of the file is read and put in cell DAT1, in the form YRMODA. The file name and date of creation are written out by PRINTFILENAME and DATEDECODE. Also the current date and time of day are written out by DATETOD. If SW=1 then control is transfered to 3.8.6 Otherwise control goes to 3.8.7

3.8.7 Tape Write

If SW=2 then DAT1 is compared to DAT2. If DAT2 is equal to or later than DAT1 then control goes to 3.8.6 Otherwise the file is written to tape. If SW is not 2 then the file is written and control is returned to 3.8.6. If an EOT is encountered on writing, the tapes are switched. The next tape is Zeroed with a message to that effect. After all files for a given user are procesed, the next user is selected in 3.8.5. After all files of all users are exhausted, control goes back to 3.8.3.

3.8.8 EOJ

This is the program exit point. Entry is by a 'T' option. Control is then returned to the AGS system.

3.8.9 Subroutines

a) GETSTRING. This routine reads a character from the keyboard and places it in an array.
b) CHNGTP. This routine is called when End of Tape (EOT) is sensed. It terminates one mag tape and initializes the next. The next tape is also Zeroed.
c) PRINTUSER. This routine prints the User's name on the output device.
d) PRINTFILENAME. This routine prints the file name on the output device
e) DEBUG. This routine tests the error cell. If zero it RETURNS.. If not, it prints out the cell in octal, as well as the message.
f) OPTION.MESS. This routine consists only of messages which are put out to the output device explaining the options available.
g) ZERO. This routine Zeroes a magnetic tape.
h) DATEDECODE. This routine unpacks the 1 word date and prints it in MO/DA/YR form.
i) DATETOD. This routine changes the 3 word cycle counter of AGS to hrs, minutes, seconds.
j) DATE.TOD.DECODE. This routine takes the output of DATETOD and prints it.
k) DATE2DATE. This routine unpacks the 1-word date from AGS and re-packs it into YRMODA form.. This form is handier for date comparison purposes.

3.9 Hardware Configuration Required

UCMD 64 executes on an Applicon Graphics System using a Digital Equipment Corporation PDP-11 minicomputer. Peripheral devices required for input/output operations are a graphics device and a keyboard or a DECwriter.

3.10 Language Used

UCMD 64 is written in BCPL and assembled with PDP-11 MACRO. The support modules for the FIRST sub program, the user command table, and sub program UCMD64.MAC are written and assembled in PDP-11 MACRO.

3.11 Operating System Used

UCMD 64 executes in the user command environment of an Applicon AGS/870/880 Operating System of version 7.3, 8.3 or greater.

3.12 Type of Program

UCMD 64 is composed of a main program and sub programs which execute under the Applicon Operating System.

3.13 Special Routines Used

Special routines used within UCMD 64 are linked from the Applicon Library Modules LIB762.OBJ. In addition various globals are obtained from files COMMON, DADEF, and MSSDEF. The BCPL interfaces for the file structure require routines AFILE, IOS, and OFILE. The BCPL file support libraries are AGSFIL and BCPLIB. The basic BCPL functions are contained in the object module RES762, AGSLIB and LLIB. All of the above files are in UIC [1,1].

3.14 Form of Program

UCMD 64 is an absolute load module formatted for execution on the AGS System by the utility LOVALL. Due to the nature of this user command it should be resident on the system disc.

3.15 Files

UCMD 64 creates a file of UFD records on magnetic tape during the 'A'll option or the 'S'elective option. This magnetic tape file can subsequently be used with FCPY to restore files when needed. It is also possible during the 'A'll option that the capacity of a single tape will be exceeded by the contents of the disc. Provision is made in UCMD 64 for deleting the partial file written on the end of the first tape and then starting the next tape with that file. The new tape is Zeroed before writing commences. This activity is fully documented on the output to the screen or the DECwriter.

3.16 Program Flow Chart

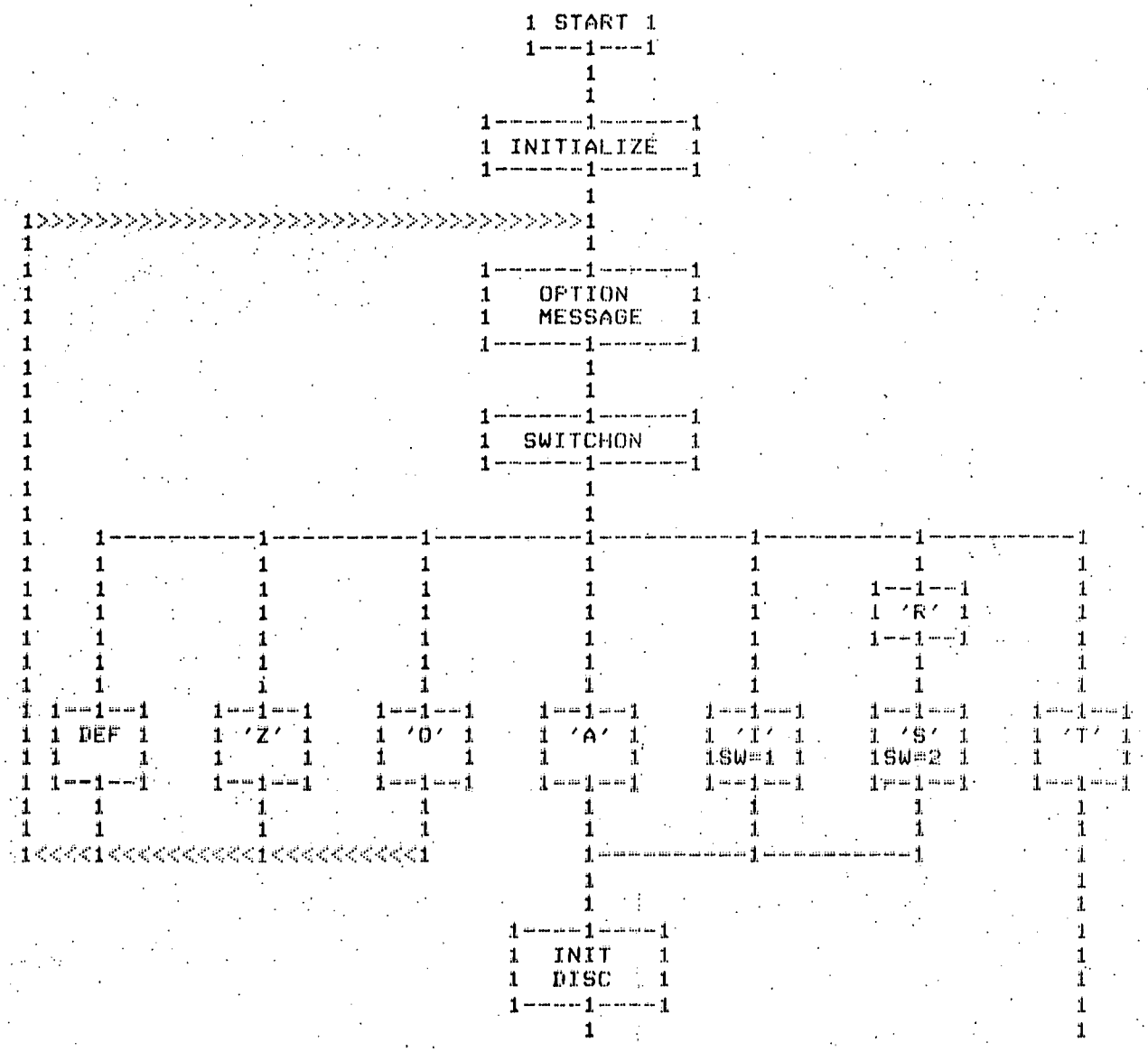

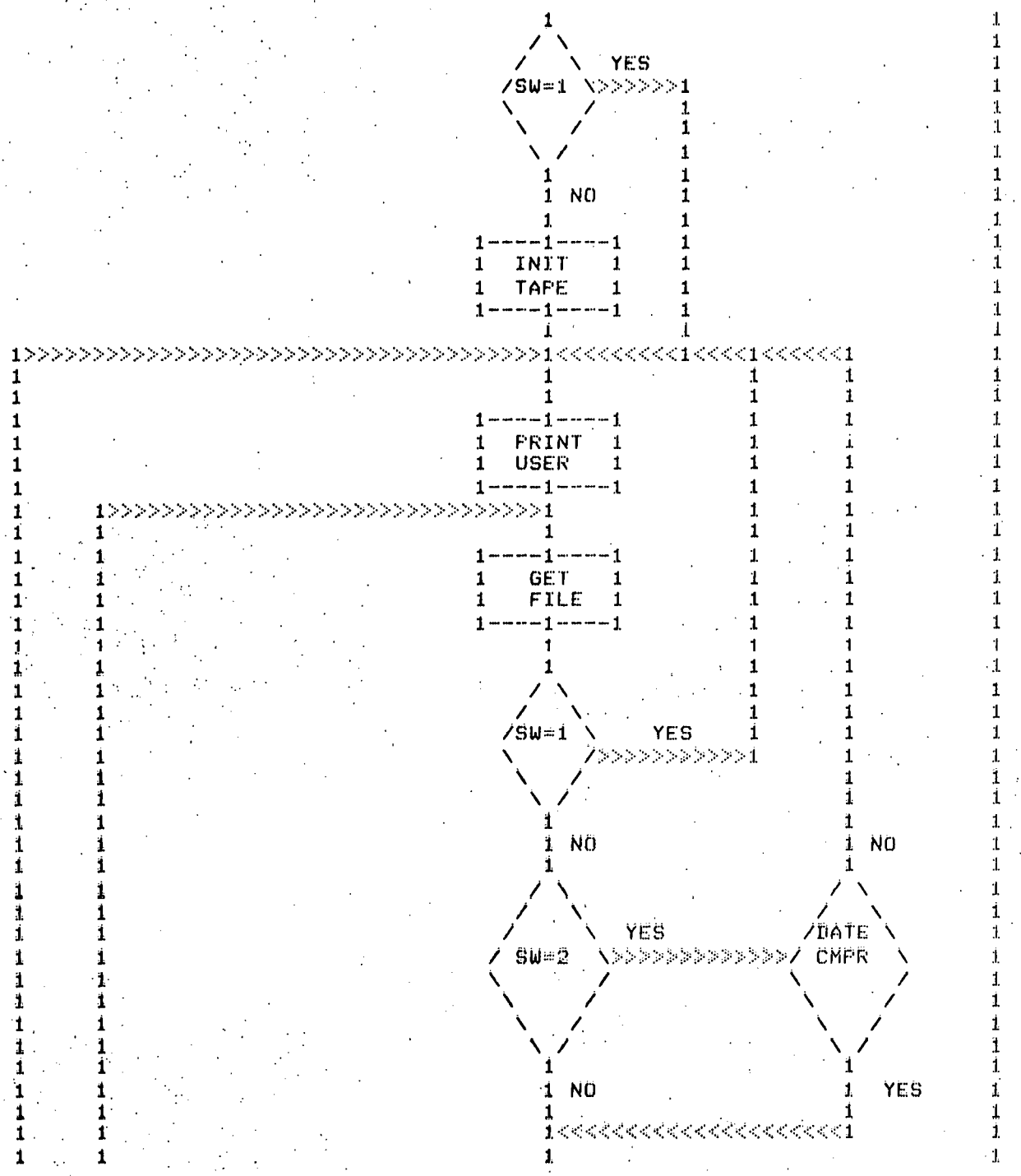
SW=1
YES
NO
INIT TAPE
PRINT USER
GET FILE
SW=1
YES
NO
NO
SW=2
YES
DATE CMPR
NO
YES

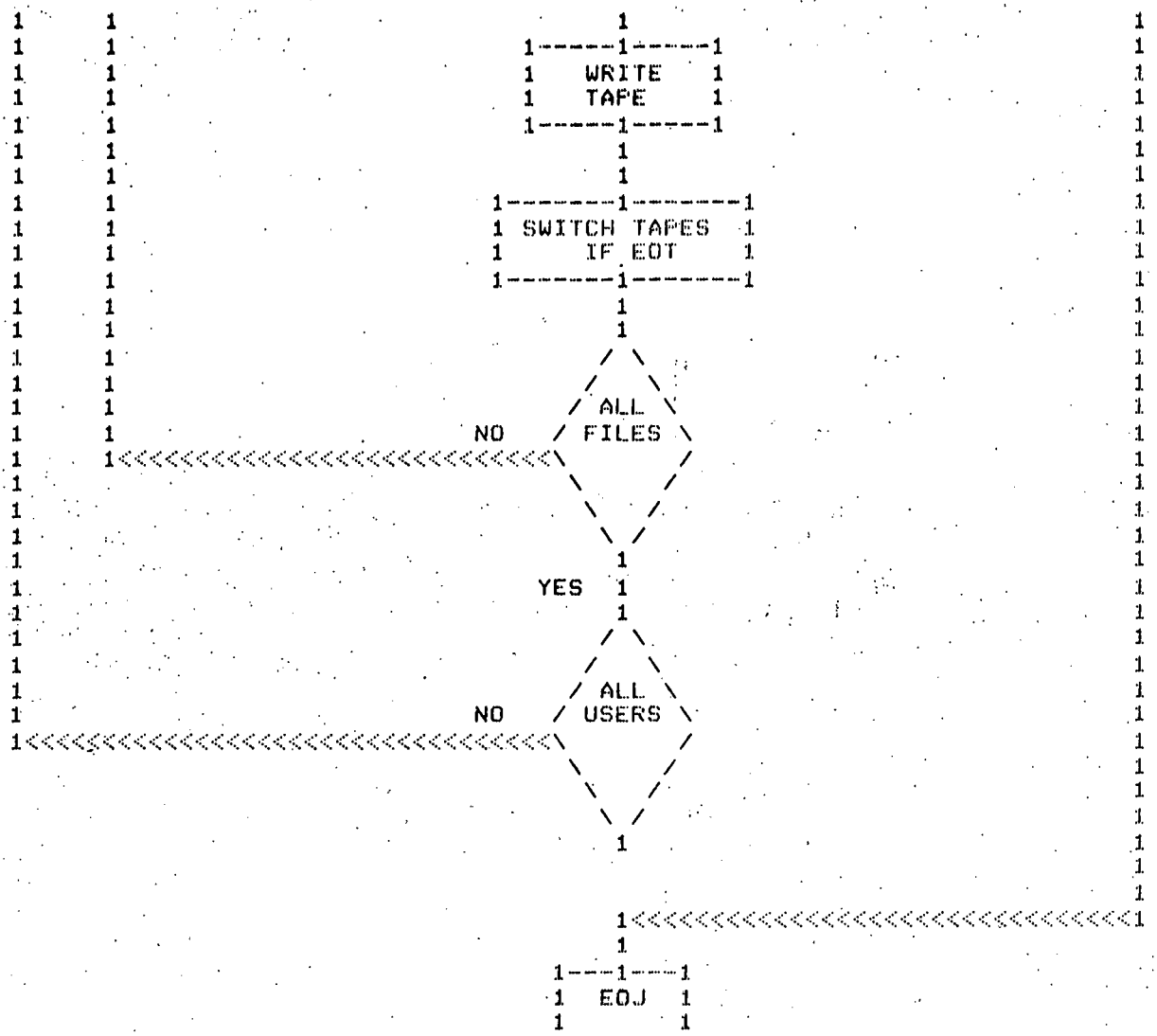
WRITE TAPE
SWITCH TAPES IF EOT
ALL FILES
NO
YES
ALL USERS
NO
EOJ

3.17 Program Listing

A current listing should be obtained from the 9624 Software Coordinator.

3.18 Backup Capability

The following DOS PIP directory shows all of the files necessary to rebuild UCMD 64. Included in this list is a file named UCMD64.BAT. This file contains all of the DOS/BATCH commands to assemble, link, and LOVALL the UCMD 64 program. The current backup tape and version should be obtained from the Software Certificate.

```
DIRECTORY DD0: [300,11 ]

27-JAN-77

AGSI64.MAC        4  23-DEC-76 <233>
LISTFL.BFL       33  25-JAN-77 <233>
UCMD64.BAT        1  23-DEC-76 <233>
UCMD64.MAC        2  23-DEC-76 <233>
UCMT64.MAC        2  23-DEC-76 <233>
```

4.0 Record of Changes to the Program

See Software Certificate

5.0 Key Words

Applicon Graphic system, Selective file dump.

6.0 References

a. Macro User Command Interface Option AGS/872 System Reference Manual, Version 3.000, Applicon Incorporated, Burlington, Massachusetts, February 1976.

b. DOS/BATCH Handbook, DEC-11-ODBHA-A-D, Digital Equipment Corporation, Maynard, Massachusetts, April 1974.

c. PDP-11 Processor Handbook, Digital Equipment Corporation, Maynard, Massachusetts, 1875.

d. T. R. Glauner, MADDS User Guide AGS/700, Sandia Laboratories, Org. 9623, September 1976.

e. J. M. Hudson, BCPL User's Manual, August 1, 1974.

7.0 Distribution

The Bendix Corporation
Kansas City Division
P.O. Box 1159
Kansas City, Missouri 64141
Attn: D. R. Lambeth, FD42
For: J. H. Mynatt

8323 A. G. Schuknecht
8430 W. A. Little
9620 R. W. DeVore
9621 R. A. Richards (2), Attn: N. J. Nelson
9624 Gino Carli
9624 W. C. Burd
9624 D. A. Oliver
9624 D. K. Robbins
9624 G. R. Urish
9624 K. E. Wiesandt
9624 File (5)
9624 Software Coordinator
9636 T. R. Glauner

8266 E. A. Aas (2)
3141 C. A. Permueller (5)
3151 W. L. Garner (3)
For ERDA/TIC (Unlimited Release)

ERDA/TIC (25) (R. P. Campbell, 3171-1)