27
5-23-78
25 80 NTIS

UCRL-52464

DYNAMIC RESPONSE OF A CYLINDRICAL SHELL IMMERSED IN A POTENTIAL FLUID

Garth E. Cummings
(Ph.D. Thesis)

April 28, 1978

Work performed under the auspices of the U.S. Department of Energy by the UCLLL under contract number W-7405-ENG-48.

LAWRENCE LIVERMORE LABORATORY
University of California/Livermore

MASTER

DISTRIBUTION OF THIS DOCUMENT IS UNLIMITED

NOTICE

"This report was prepared as an account of work sponsored by the United States Government. Neither the United States nor the United States Department of Energy, nor any of their employees, nor any of their contractors, subcontractors, or their employees, makes any warranty, express or implied, or assumes any legal liability or responsibility for the accuracy, completeness or usefulness of any information, apparatus, product or process disclosed, or represents that its use would not infringe privately-owned rights."

NOTICE

Reference to a company or product name does not imply approval or recommendation of the product by the University of California or the U.S. Department of Energy to the exclusion of others that may be suitable.

Printed in the United States of America
Available from
National Technical Information Service
U.S. Department of Commerce
5285 Port Royal Road
Springfield, VA 22161
Price: Printed Copy $; Microfiche $3.00

Page Range	Domestic Price	Page Range	Domestic Price
001–025	$ 4.00	326–350	$12.00
026–050	4.50	351–375	12.50
051–075	5.25	376–400	13.00
076–100	6.00	401–425	13.25
101–125	6.50	426–450	14.00
126–150	7.25	451–475	14.50
151–175	8.00	476–500	15.00
176–200	9.00	501–525	15.25
201–225	9.25	526–550	15.50
226–250	9.50	551–575	16.25
251–275	10.75	576–600	16.50
276–300	11.00	601–up	[1]
301–325	11.75		

[1] Add $2.50 for each additional 100 page increment from 601 pages up.

LAWRENCE LIVERMORE LABORATORY
University of California Livermore, California 94550

UCRL-52464

DYNAMIC RESPONSE OF A CYLINDRICAL SHELL IMMERSED IN A POTENTIAL FLUID

Garth E. Cummings
(Ph.D. Thesis)

April 28, 1978

NOTICE
This report was prepared as an account of work sponsored by the United States Government. Neither the United States nor the United States Department of Energy, nor any of their employees, nor any of their contractors, subcontractors, or their employees, makes any warranty, express or implied, or assumes any legal liability or responsibility for the accuracy, completeness or usefulness of any information, apparatus, product or process disclosed, or represents that its use would not infringe privately owned rights.

DISTRIBUTION OF THIS DOCUMENT IS UNLIMITED

CONTENTS

	Page
Abstract	1
Introduction	2
Analysis	5
Shell Equations	7
Fluid Equations	9
Calculational Method	11
Shell Equations	12
Fluid Equations	13
Calculational Technique	14
Experimental Verification	16
Application of Numerical Technique	24
Conclusion	28
Nomenclature	30
References	35
Appendix A - Derivation of the Governing Equations	37
Shell Equations	37
Fluid Equations	54
Analytical Solution	58
References for Appendix A	63
Appendix B - Development of Equations used for Computation	64
Basic Strategy	64
Shell Equations	65
Fluid Equations	77
References for Appendix B	83

CONTENTS (cont'd)

Page

Appendix C - Description of Experiment----------84

Description of Apparatus----------84

Instrumentation and Data Reduction----------88

Measurement Techniques----------92

Experimental Results----------96

References for Appendix C----------109

Appendix D - The Computer Code SHELVIB----------110

Listing of Computer Code SHELVIB----------111

Sample Input----------138

Sample Output----------139

References for Appendix D----------142

DYNAMIC RESPONSE OF A CYLINDRICAL SHELL IMMERSED IN A POTENTIAL FLUID

ABSTRACT

A numerical solution technique is presented for determining the dynamic response of a thin, elastic, circular, cylindrical shell of constant wall thickness and density, immersed in a potential fluid. The shell may be excited by an arbitrary radial forcing function with a specified time history and spatial distribution. In addition, a pressure history may be specified over a segment of the fluid outer boundary. Any of the natural shell end conditions may be prescribed.

A numerical instability prevented direct solutions where the ratio of the hydrodynamic forces to shell inertial forces is greater than two. This instability is believed to be the result of the weak coupling between the equations describing the fluid to those describing the shell. To circumvent this instability, an effective mass was calculated and added to the shell.

Comparison of numerical to experimental results are made using a 1/12 scale model of a nuclear reactor core support barrel. Natural frequencies and modes are determined for this model in air, water, and oil. The computed frequencies compare to experimental results to within 15%.

We illustrate the use of this numerical technique by comparing it to an analytical solution for shell beam modes and resolve an uncertainty in the analytical technique concerning the proper effective mass to use.

INTRODUCTION

Whenever solids move in contact with fluids, the resisting pressure of the fluid should be taken into account. Traditionally, this pressure is assumed proportional to the acceleration of the moving solid relative to the fluid and is accounted for by assigning an increased density to the solid. Thus, an increased or "effective mass" is incorporated into the equation of motion of the solid structure to account for this fluid influence. For shells this effective mass is a function of mode number, shell radius, thickness, length, and proximity of neighboring structures. As will be shown, the effect of the fluid on the motion of a submerged shell can be dramatic with reductions by a factor of three of the natural frequencies.

Early workers in this field [1] used this effective mass technique with modal analysis to analyze shells submerged in a fluid. Closed form solutions were obtained for simply-supported cylinders in infinite fluids. More recently, similar techniques have been applied to coaxial cylindrical shells [2-6]. The approach used is to couple the fluid to the shell by forcing the radial velocity of the shell to equal that of the fluid at the shell wall and the dynamic pressure in the fluid to equal the loading on the shell. The acoustic wave equation is used to represent the fluid (assuming stationary fluid and small motions) in conjunction with the equations of motion of thin shells.

In addition to the fluid's effect on the vibration frequencies of a submerged shell, the fluid can also act as a vehicle for the transmission of forces to cause vibrations. Such is the case of the core support barrel of a nuclear reactor where the fluid flowing down the annulus between the core support barrel and pressure vessel wall imparts both a random force due to turbulence and a deterministic force due to pump pulsations. The

dynamic response of the fluid-filled tanks in rockets used in the space program is another area where fluid-shell interaction is important.

Recent methods used todetermine a shell's response to these types of fluid forces will now be outlined.

Bowers and Horvay [4] calculated the response of a simply-supported shell to pulsating pressure in an encompassing water-filled annulus. The pump induced pressure pulsations are imposed over a portion of the outer periphery of the water annulus resulting in a time-dependent mixed boundary value problem since the remainder of the outer periphery is modeled as an inflexible wall. An approximate solution method which gives the pressure distribution in the water annulus is made possible by replacing the pressure pulsations with equivalent body forces in the annulus and thus converting the mixed boundary value problem into a forced vibration problem with homogeneous boundary conditions. The solution of this forced vibration problem gives the pressure in the annulus and on the shell wall. The shell equations are next solved by the normal mode method to obtain natural frequencies and displacements of the shell. This analysis is only applicable to simply-supported shells and does not account for water inside the shell.

Au-Yang [5,7] used a statistical method to predict the r.m.s. response of a shell surrounded by a water annulus and subjected to random excitation uniformly distributed about the shell. This method is based on finite element techniques and requires prior knowledge of the shell mode shapes and the cross-spectral density of the forcing function.

Berger and Palmer [8] have devised a numerical solution technique to determine the transient motion of an infinitely long, viscoelastic, cylindrical shell of arbitrary cross-section, surrounded by an infinite

acoustic medium. They used finite difference techniques to model the conformally mapped shell and acoustic equations. Laplace transformation was used to handle the time derivative.

Other, more comprehensive numerical techniques are described by Belytschko [9]. In general, these were developed to describe structural motion resulting from high energy impulse loading as might result from a nuclear reactor accident. They, thus, are tailored to find short term and nonlinear responses and require such small time steps as to make calculation to steady-state impractical.

In our attempts to treat the fluid-shell problem analytically, a number of assumptions are made. The shell is assumed either infinitely long or simply-supported where in an actual installation neither is the case. Also, shell mode shapes in a fluid are assumed similar to those in vacuo. The latter has little effect on calculation of the natural frequencies, but presents difficulties when support clearances affect motion or where shell loads are being positioned at shell nodes to minimize responses. The published numerical methods treat the shell and fluid as a discretized continuum and therefore circumvent these considerations but are tailored for short term transient calculations, making computation to steady state prohibitively expensive.

We have developed a unique numerical solution technique which can accurately calculate a cylindrical shell's natural frequencies and mode shapes in potential fluids. This technique can be applied to thin, elastic, circular shells with constant wall thickness and density. The shell can be either in vacuo, filled with fluid, surrounded by fluid, or immersed in a fluid in a stiff, coaxial container. The length to radius ratio of the shell should be greater than one to predict natural

frequencies to within 5% of those calculated by three dimensional theory. An arbitrary forcing function can be applied directly to the shell surface. In addition, a pressure history can be specified over a segment of the fluid's outer boundary, up to 1/4 the shell's length. The fluid is modeled as a potential fluid and therefore, for an accurate calculation, the time period of the load or pressure change should be greater than the acoustic wave travel time over the fluid domain. Also the wave velocity of the shell should be less than the acoustic velocity of the liquid. Any of the natural boundary conditions can be prescribed on the ends of the shell and they may change with time.

This numerical solution technique is unique in several respects. Finite difference techniques were used to model the fluid and shell with the potential fluid characterized by an elliptic Helmholtz type equation. The mixed boundary value problem was handled by a numerical technique that has been used in fluid mechanics, but has not been employed in fluid-shell problems. A transient response approach was used to determine the short term response as well as the natural frequencies and modes for the fluid-shell problem. Other transient response codes are tailored to computed only the short time response to sudden phenomena such as occur with reactor accidents.

This numerical solution technique can be used for design sensitivity studies, to check analytical solutions, or for numerical experimentation.

ANALYSIS

This section describes the equations used to model the shell and the fluid regions inside and/or outside the shell. The geometry is described in Fig. 1.

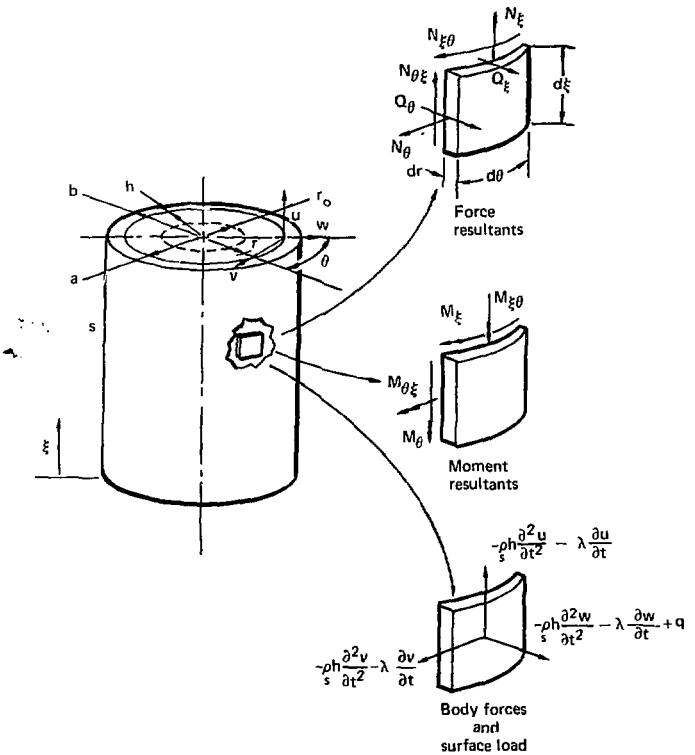

Fig. 1 Shell element, force and moment resultant diagrams.

Shell Equations

The shell equations, as first postulated by Love, are a reduced form of the three dimensional theory of elasticity equations. In terms of finite difference techniques, noding of the shell in the radial direction is not required and this decreases computation time as compared to a three dimensional mesh. The basic assumptions used in formulation of the shell equations are:

1. The shell is thin $(h/a < 1/10)$*
2. The deflections of the shell are small (linear theory holds)
3. The transverse normal stress is negligible.
4. The normals to the undeformed midsurface of the shell remain straight and normal to the deformed midsurface and they suffer no extension.

Sanders' solution method [10,11,12] will be used. He employs the principle of virtual work to obtain the equilibrium equations for the shell element in Fig. 1. Leissa [13] demonstrates the close agreement between Sander's solution and that using the three dimensional theory of elasticity. By adding external loads and a D'Alembert term to these equilibrium equations we obtain the following equations of motion (see Appendix A).

$$\frac{\partial N_\xi}{\partial \xi} + \frac{\partial \bar{N}_{\xi\theta}}{\partial \theta} - \frac{1}{2a}\frac{\partial \bar{M}_{\xi\theta}}{\partial \theta} - \frac{Eh}{a}\frac{\partial^2 u}{\partial \tau^2} - \lambda\sqrt{\frac{E}{\rho_s}}\frac{\partial u}{\partial \tau} = 0$$

$$\frac{\partial N_\theta}{\partial \theta} + \frac{\partial \bar{N}_{\xi\theta}}{\partial \xi} + \frac{3}{2a}\frac{\partial \bar{M}_{\xi\theta}}{\partial \xi} + \frac{1}{a}\frac{\partial M_\theta}{\partial \theta} - \frac{Eh}{a}\frac{\partial^2 v}{\partial \tau^2} - \lambda\sqrt{\frac{E}{\rho_s}}\frac{\partial v}{\partial \tau} = 0 \qquad (1)$$

$$-N_\theta + \frac{1}{a}\left[\frac{\partial^2 M_\xi}{\partial \xi^2} + 2\frac{\partial^2 \bar{M}_{\xi\theta}}{\partial \xi \partial \theta} + \frac{\partial^2 M_\theta}{\partial \theta^2}\right] - \frac{Eh}{a}\frac{\partial^2 w}{\partial \tau^2} - \lambda\sqrt{\frac{E}{\rho_s}}\frac{\partial w}{\partial \tau} + aq = 0$$

*Nomenclature listed at end.

We have introduced the dimensionless time variable $\tau \equiv [E/\rho_s]^{1/2} t/a$, a dimensionless axial space variable, $\xi \equiv x/a$, a viscous damping coefficient λ, and radial load q. The viscous damping coefficient is to include both structural and fluid damping which are small in most cases (see Table C-5 in Appendix C).

We simplify the analysis [11,12] by describing (1) as a set of four dimensionless, coupled, partial differential equations in terms of u, v, w, M_ξ, ξ, and τ. We do this by expanding the force and moment resultants, displacements, loads, and strains into Fourier series in the circumferential variable θ. We then use a reference stress level, σ_o, to make the coefficients of the Fourier series dimensionless. For each Fourier term, n, we obtain the following four coupled equations in which primes denote derivatives with respect to ξ and dots with respect to τ.

$$\alpha_1 u_n'' + \alpha_2 u_n + \alpha_3 v_n' + \alpha_4 w_n' = \ddot{u}_n + C\dot{u}_n \tag{2a}$$

$$\alpha_5 u_n' + \alpha_6 v_n'' + \alpha_7 v_n + \alpha_8 w_n'' + \alpha_9 w_n + \alpha_{10} M_{\xi n} = \ddot{v}_n + C\dot{v}_n \tag{2b}$$

$$\alpha_{11} u_n' + \alpha_{12} v_n'' + \alpha_{13} v_n + \alpha_{14} w_n'' + \alpha_{15} w_n + \alpha_{16} M_{\xi n}'' + \alpha_{17} M_{\xi n} = \ddot{w}_n + C\dot{w}_n - q_n \tag{2c}$$

$$\alpha_{18} v_n + \alpha_{19} w_n'' + \alpha_{20} w_n + \alpha_{21} M_{\xi n} = 0 \tag{2d}$$

where

$$u = \frac{a\sigma_o}{E} \sum_{n=o}^{\infty} u_n \cos n\theta, \quad v = \frac{a\sigma_o}{E} \sum_{n=1}^{\infty} v_n \sin n\theta \tag{3a,b}$$

$$w = \frac{a\sigma_o}{E} \sum_{n=o}^{\infty} w_n \cos n\theta, \; M_\xi = \frac{\sigma_o h^3}{a} \sum_{n=o}^{\infty} M_{\xi n} \cos n\theta \tag{3c,d}$$

$$q = \frac{\sigma_o h}{a} \sum_{n=o}^{\infty} q_n \cos n\theta \tag{3e}$$

The coefficients $\alpha_1, \ldots, \alpha_{21}$ are listed in Table A-1 of appendix A. C is a dimensionless damping coefficient defined in the nomenclature.

The following quantities must be prescribed at the boundaries, $\xi = 0$, s/a.

$$\left.\begin{array}{c} N_\xi \quad \text{or} \quad u \\ \hat{N}_{\xi\theta} = [\bar{N}_{\xi\theta} + \frac{3}{2a} \bar{M}_{\xi\theta}] \text{ or } v \\ \hat{Q}_\xi = [\frac{\partial M_\xi}{\partial \xi} + 2 \frac{\partial \bar{M}_{\xi\theta}}{\partial \theta}] \text{ or } w \\ M_\xi \quad \text{or} \quad w' \end{array}\right\} = 0 \text{ at } \xi = 0, \; s/a \tag{4}$$

Fluid Equations

The fluid both inside the shell and in the annular region outside the shell will be treated as inviscid [5,14,15], incompressible, and having no gross motion [3,16,17]. In other words, the fluid adds inertia to the shell, couples the shell to neighboring structures, and acts as a vehicle for transmitting forces to the shell. As a result, the fluid can be represented by a single equation in terms of one dependent variable, the dynamic pressure p.

Expanding the pressure into a Fourier series about the circumference results in a differential equation with independent variables ξ, η, and τ where η is a dimensionless radial coodinate, $\eta \equiv r/a$. To couple the fluid

to the shell, the radial velocities of the shell and fluid are made equal. Also, the assumption is made that the pressure belonging to a given circumferential mode does not excite other than its matching structural mode; an assumption usually made in modal analysis [1,3,5,17].

Starting with the equation of motion for inviscid, compressible fluids (Euler's equation), the continuity equation, and assuming small oscillations we obtain the acoustic wave equation [18].

$$\frac{1}{c^2}\frac{\partial^2 p}{\partial t^2} - \nabla^2 p = 0 \tag{5}$$

For an incompressible fluid ($c \to \infty$) we may express $\nabla^2 p$ in cylindrical coordinates as

$$\frac{\partial^2 p_n}{\partial r^2} + \frac{1}{r}\frac{\partial p_n}{\partial r} - \frac{n^2}{r^2} p_n + \frac{\partial^2 p_n}{\partial \xi^2} = 0, \tag{6}$$

where we expand p in a Fourier series as

$$p = \frac{\sigma_o h}{a} \sum_{n=o}^{\infty} p_n \cos n\theta.$$

The assumption of incompressibility is valid if the sonic velocity in the fluid is much higher than the velocity of motion of the shell surface and/or the shell is closely confined in a rigid-walled tank. Both Mnev and and Pertsev [2], and Chen and Rosenberg [3] have shown that compressibility effects are unimportant in calculating the response of a shell closely confined in a liquid. Mnev and Pertsev provide an analytical solution for a shell with simply-supported end conditions submerged in an acoustic fluid. They show that if the shell is confined, coaxially, inside a rigid-walled outer cylinder, the criteria to determine whether the incompressibility assumption is valid is

$$[\frac{\Omega b}{c}]^2 \frac{1}{n^2 + (\frac{\pi b m}{s})^2} << 1. \tag{7}$$

For all other cases and when $n = 0$

$$[\frac{\Omega s}{\pi m c}]^2 << 1 \tag{8}$$

is the criteria to be used. The experimental results reported later substantiate these criteria.

Boundary conditions must be specified on the top and bottom of the fluid regions and at the inner and outer surfaces. Either a pressure release ($p_n = 0$) or rigid wall ($\partial p_n/\partial \xi = 0$) can be specified on the top or bottom of the fluid regions although the former more closely matches the analytical solution and experimental results reported here. Similar boundary conditions can be applied to the outer surface of the outer fluid. At the shell surfaces the shell radial velocity must be made equal to the fluid radial velocity. Therefore, using Euler's equation we can express the pressure gradient at the wall as

$$\frac{\partial p_n}{\partial \lambda} = \pm \frac{a}{h} \frac{\rho_f}{\rho_s} \frac{\partial^2 w_n}{\partial \tau^2} \quad . \tag{9}$$

To eliminate the singularity at $\lambda = 0$ a rigid inner boundary at $\lambda = r_0/a$, ($r_0 << a$) was used.

CALCULATIONAL METHOD

The basic strategy of the calculational method is to solve the finite difference equations of the shell and fluid separately, but to account for the interaction between the two by imposing the boundary condition (9) at the shell-fluid interface. The shell displacements as a function of time for each Fourier mode are determined separately and must be summed to get the total displacement. The forcing function, whether it

is applied on the outer boundary of the fluid or on the shell must be expanded into a Fourier series with the appropriate Fourier term applied to each mode. The natural frequencies for each mode can be calculated by applying a load that is a step function in time and following the time history of the response. This is the method used in this work. Another means of determining the natural frequencies is to vary the load harmonically and generate a frequency plot.

Shell Equations

The algorithm used to solve the shell equations is similar to that used by Johnson and Greif [12]. The shell equations of motion (2) for a particular Fourier mode are cast in a matrix form in terms of z, a four element column vector composed of unknowns u, v, w, M_ξ,

$$Kz'' + Fz' + Gz = y + \mathcal{D}\ddot{z} + L\dot{z}. \tag{10}$$

$K, F, G, \mathcal{D}, L$ are 4 x 4 coefficient matrices, and y is a column loading vector. All are defined in Appendix B. Another matrix equation is developed to describe the shell end conditions,

$$\hat{\Omega}Hz' + (I - \hat{\Omega} + \hat{\Omega}\, J)\, z = \ell, \tag{11}$$

with $\hat{\Omega}$ a diagonal matrix and ℓ a column vector defined by the end conditions. H and J are 4 x 4 matrices (see Appendix B) defined by the equations relating Sanders' boundary conditions (4) to z. For example, if u is known at an end, the first diagonal element of $\hat{\Omega}$ is zero, and the first element of ℓ is the prescribed value of u.

Using difference schemes, equations (10) and (11) are recast into three matrix equations (Appendix B, equations (B-10a,b,c,)) in terms of the unknown vectors $z_{i+1,j}$, $z_{i,j}$, $z_{i-1,j}$ and are solved by a Gaussian elimi-

nation technique at each time step j. Central differencing is used to describe the space derivatives and backward differencing to describe the time derivatives. The backward differencing for the time derivatives (Houbolt method) [19] results in an implicit, unconditionally stable algorithm. To solve the three matrix equations a recurrence relationship is used relating $z_{i,j}$ and $z_{i-1,j}$. The coefficients and constants for this relationship are calculated starting at i = 0 up to i = N. Then using the boundary condition at i = N the vectors $z_{N,j}$, $z_{N-1,j}$, etc. down to $z_{0,j}$ are calculated. This procedure is repeated for successive time steps.

Fluid Equations

The equation representing the fluid (6) is a form of the Helmholtz equation. The nth Fourier mode of this equation is recast into finite difference form giving an equation for each node (Appendix B, equations (B-12a,b,c)). The resulting set of linear, algebraic equations is solved by a fast, direct solution method [20] which takes advantage of the tridiagonal nature of this set and employes an odd-even cyclic reduction technique. The axial dimension must be subdivided into N>2 increments that do not include multiples of 7,11,13,17, etc.

We were interested in simulating pump pressure pulses coming into a pressure vessel and therefore modified the direct solution method so as to handle the specification of mixed boundary values on the outer fluid boundary. Thus, a pressure profile, p(t), can be specified over the inlet region and a rigid wall, $\partial p/\partial n = 0$, over the remainder of the outer boundary. A capacitance matrix technique [21,22] was used to modify the direct solver so that mixed boundary values could be handled. This involved a modification of the rows of the matrix form of the set of finite differ-

ence equations such that the cyclic reduction process could still be used on the modified system.

Calculation Technique

In the original paper by Johnson and Greif [12] constraints were placed on the time and space increments. As the time increment gets large, the calculated shell response approaches the correct static solution but any dynamic response is damped out. The time increment must be kept to less than 1/50 of the period of a particular mode of vibration so that the displacements are not significantly damped. This damping results from the time integration scheme used (Houbolt method) and is strictly a numerical effect. The tendency of the fluid is to increase this numerical damping. The damping increases as the fluid reaction becomes more significant either due to closer shell spacing, higher fluid density or for the lower shell modes. To maintain damping less than 1% for calculations involving a fluid, time steps between 1/50 and 1/500 of the period of vibration were used.

The space increment must be kept small enough to describe adequately the axial bending moment, M_ξ, which is proportional to the second time derivative of the radial displacement. In general, 120 axial nodes were found to give adequately resolved displacements and bending moments.

As previously stated, the original shell code is unconditionally stable. It was found, however, that the addition of the fluid resulted in an unstable solution when the hydraulic loading exceeded twice the inertial force generated in the shell. This numerical instability is believed to be caused by the weak coupling employed to connect the shell and fluid equations. Belytschko [9] has reported on numerical instabilities

in fluid-structure codes from this cause. Weak coupling results when two separate programs are used to form a complete solution. In our case, this weak coupling was through the boundary condition (9) at the shell-fluid interface. We made several attempts to circumvent this instability, i.e., incrementing down the shell density, incrementing up the fluid density, iterating on the pressure at each time step, all without success. To overcome this instability, the shell and fluid equations would have to be more strongly coupled, i.e., made more interdependent. This would require a complete reformulation of these equations or a change to an explicit type of time integration and incorporation of several boundary nodes in both the shell and fluid equations.

The stability criterion that was found may be stated as

$$\frac{\text{hydraulic resisting pressure}}{\text{shell inertial force per unit area}} = \rho_f \Phi / \rho_s h < 2 \qquad (12)$$

where Φ is called the connected mass factor. In general Φ is a function of mode number and geometry and increases as the mode number or gap between shell and outer fluid boundary decreases.

For those cases where the stability criterion cannot be met, an approximate solution can be computed by using an increased shell density and decreased fluid density so that the effective mass, M_{eff}, is held constant.

$$M_{eff} = \rho_s h + \rho_f \Phi \qquad (13)$$

$$\Phi = - p(a)/\rho_f \partial^2 w/\partial t^2 \qquad (14)$$

The connected mass factor, Φ, is computed according to (14) by using in the computation a normal shell density, ρ_s, and a decreased fluid density,

ρ_f, such that the inequality of (12) is satisfied. The validity of this technique has been established by Mnev and Pertsev [2] who showed, that for the range of problems for which the incompressibility assumption is valid, (7,8) the effect of the fluid can be adequately described by increasing the shell surface density by the amount $\rho_f\Phi$. The connected mass factor is a function of the axial mode excited, m, as well as the circumferential mode n. Therefore, the accuracy of Φ computed is closest when only a single axial mode is excited. Fortunately, for most loadings, the fundamental is predominant. Also for the higher modes (n>2) the difference in Φ between axial modes is 10% or less. For a particular mode, Φ can be calculated as closely as desired by applying, at the modes anti-node, a harmonic load close to the mode's natural frequency.

EXPERIMENTAL VERIFICATION

An experimental program was undertaken to verify the numerical technique. A thin walled, circular shell was fabricated and instrumented with two dynamic pressure transducers and eight miniature accelerometers. These read the pressure on the shell's outer surface and its radial acceleration. The experimental arrangement is shown in Fig. 2 and approximates a nuclear pressurized water reactor core barrel at 1/12 scale.

The natural frequencies and radial accelerations of the shell were measured in air, water, and oil. Excitation with liquid was provided by a piston-cylinder arrangement connected to an electro-magnetic exciter. Sinusoidal pressure waves were generated in the cylinder and conducted to two inlet ports, finally impinging on the shell. A frequency sweep identified the shell resonant frequencies and modes from the accelerometer signals. In addition, the natural frequencies were measured using an impact technique [23].

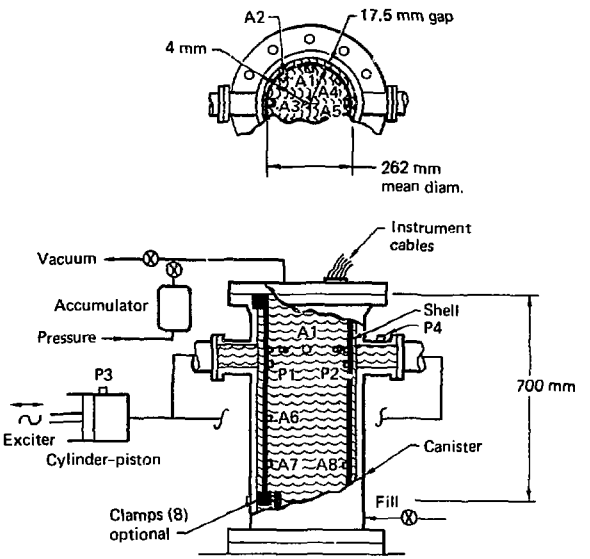

Instrumentation

Accelerometers, A1 through A8

Pressure transducers, P1 through P4

Fig. 2 Experimental configration.

Measured and numerical results in air, water, and oil are shown in Tables 1a and 1b.

For a simply-supported shell in water, connected mass factors were calculated in accordance with Mnev and Pertsev [2] and compared to numerical results (14). This comparison is shown in the third and fourth columns of Table 1a. In the remaining columns comparison is made between measured and calculated natural frequencies for each mode. The measured results for air were obtained using the impact technique and for water using both the impact technique and harmonic excitation, with the results averaged. The numerical calculations were made with the shell modeled assuming it fixed at the top end and either simply-supported or free at the bottom end. The ends of the liquid region were held at constant pressure and the outer fluid boundary assumed rigid. Measured and calculated natural frequencies in oil are compared in Table 1b. Natural frequencies in oil were measured using harmonic excitation.

Figs. 3a and 3b show the natural frequencies of the experimental shell as a function of circumferential mode number for fixed-simply-supported and fixed-free end conditions. The solid and dotted lines trace through the numerical results for air and water, respectively and the symbols indicate measured data. Open symbols denote impact results in air, solid, impact results in water, and crossed, harmonic results in water. Air and water results for a given shell end condition are shown on the same figure for the first three axial modes.

As noted by Kraus [24] and others, the lowest natural frequency of thin shells is not at the lowest circumferential mode number and in our case is at $n = 2$ or 3. Frequency should and does increase with increasing axial mode number, m. The decrease in natural frequency due to the water is quite dramatic as would be expected for the confined

Table 1a - Comparison of Calculated and Measured Shell Natural Frequencies in Air and Water

n	Shell Simply-Supported (both ends) $w = v = M_E = N_E = 0$			Shell Fixed-Simply-Supported $u = v = w = w' = 0,\ v = w = M_E = N_E = 0$					Shell Fixed-Free $u = v = w = w' = 0,\ N_E = \hat{N}_{E\theta} = \hat{Q}_E = M_E = 0$				
	m	Connected Mass Factor, Φ (m)		m	Natural Frequency in Air, $\omega/2\pi$ (Hz)		Natural Frequency in Water, $\Omega/2\pi$ (Hz)		m	Natural Frequency in Air, $\omega/2\pi$ (Hz)		Natural Frequency in Water, $\Omega/2\pi$ (Hz)	
		Analytic	Numerical		Measured	Numerical	Measured	Numerical		Measured	Numerical	Measured	Numerical
1	1	0.79	0.78										
2	1	0.28	0.28	1	530	640	200	205	1/2	200	230	75	75
									3/2	740	860	315	300
3	1	0.14	0.15	1	550	555	245	235	1/2	440	435	195	185
				2	925,1005		475	540	3/2	620	640	300	275
									5/2	1150	1220	625	560
4	1	0.094	0.094	1	860	860	440	430	1/2	820	820	420	410
				2	1050	1170	580	600	3/2	890	880	480	450
				3	1440	1470	860	760	5/2			645	575
5	1	0.066	0.069	1	1350	1345	770	750	1/2	1325	1310	755	750
				2	1460	1485	860	850	3/2	1375	1350	805	755

Table 1b - Comparison of Calculated and Measured Shell Natural Frequencies in Oil

n		Shell Fixed-Simply-Supported				Shell Fixed-Free			
		m	Natural Frequency in Oil, $\Omega/2\pi$ (Hz)			m	Natural Frequency in Oil, $\Omega/2\pi$ (Hz)		
				Measured	Numerical			Measured	Numerical
3		1		240	245	1/2		205	195
4		1		450	450	1/2		435	430
5		1		795	780	1/2		780	780

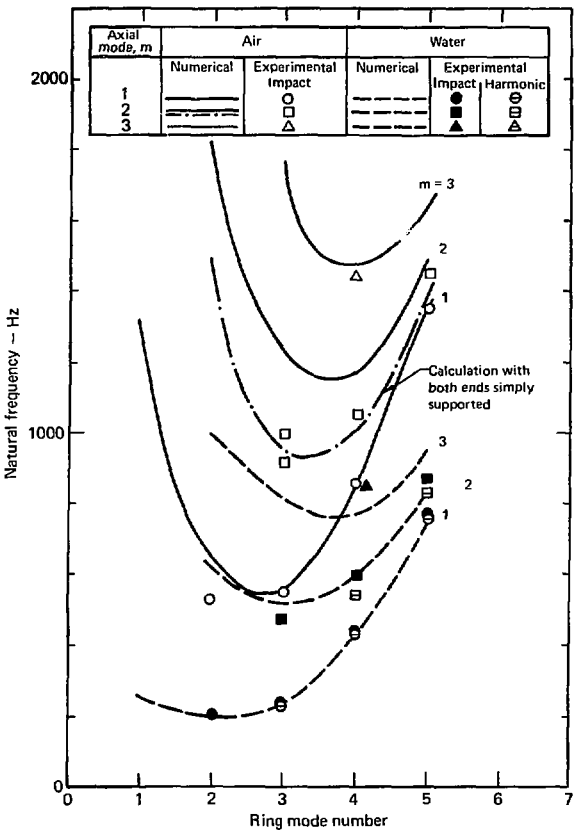

Fig. 3a Natural frequencies of model core barrel with fixed-simply supported end conditions.

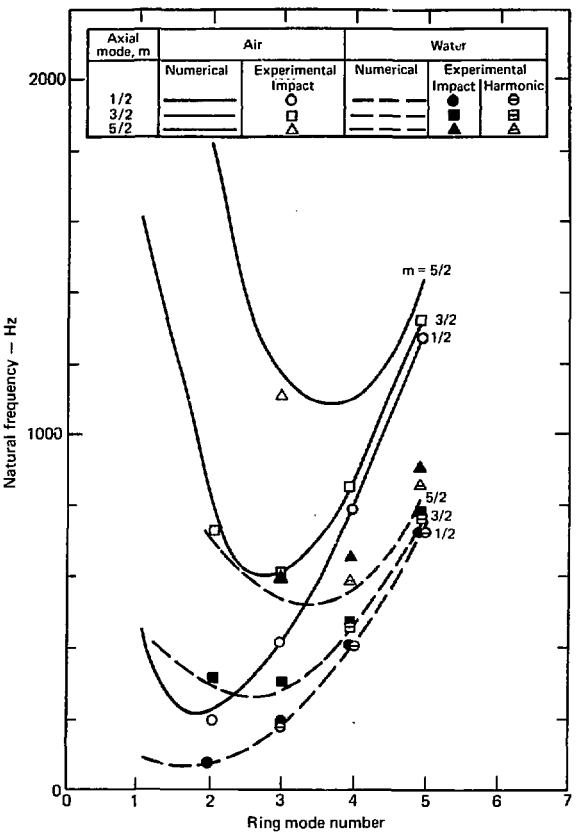

Fig. 3b Natural frequencies of model core barrel with fixed-free end conditions.

geometry of the experiment. Note that in Fig. 3a (see dot-dash line) the numerical and experimental results in air for the m=2 mode compare better when simply-supported end conditions are specified at both ends in the calculation instead of fixed at one end and simply-supported at the other. For the other cases of Fig. 3a, numerical calculations using fixed-simply-supported shell end conditions compare best with the measured frequencies. Also note that two natural frequencies were measured for the (3,2) mode in air. Both anomalies are probably caused by the method used to support the experimental shell.

Details of a numerical calculation of the experimental shell's nature frequencies for the n=2 and n=5 modes are shown in Figs. 4a and 4b. The use of the connected mass factor is illustrated by these calculations.

The shell is assumed immersed in water in a rigid-walled container with pressure held constant at the end of the fluid region. The ends of the shell are fixed-simply-supported and an impulse load is applied at the shell's middle. The figures show the time history of the radial displacement three-quarters from the fixed end. The solid line shows the computer response for zero fluid density with the shell density determined using the effective mass calculated according to (14). The dotted lines are calculations using the same effective mass but a fluid density corresponding to the maximum allowed by (12). For the n=2 modes (Fig. 4a) this maximum allowed density is 720 kg/m^3 and for n=5 (Fig. 4b) it is the normal density of water, 1000 kg/m^3.

In Fig. 4a a more accurate determination of the connected mass factor, Φ, would have decreased the small (5%) discrepancy in frequency. In Fig. 4b, the effect of numerical damping when a finite density fluid is used in the calculation is evident. The calculated frequencies are within 5% of the

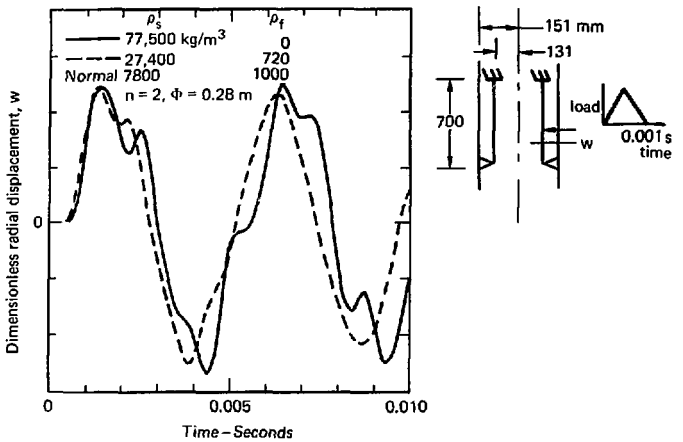

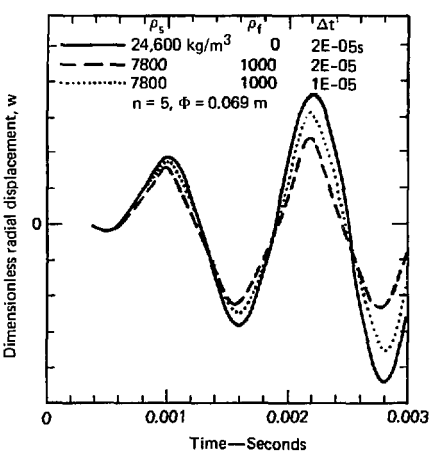

Fig. 4 Calculation of natural frequency using the connected mass factor.

measured frequencies in water of 200 Hz ($n = 2$) and 770 Hz ($n = 5$) respectively.

Care was taken to make sure that the experiment would produce results which could provide a valid comparison to numerical results. Incompressible fluids (deaerated water and oil) and an elastic (stainless steel) shell material were used. The geometry was such that the potential fluid approximation was valid according to equation (7). Two different shell end conditions and two nozzle arrangements were used. Measurements of the damping coefficients proved them low enough (<1%) to be modeled in the simple manner that they were, i.e., as simple viscous structural damping coefficients for each mode. The fact that the natural frequencies measured match closely those predicted by calculation speak for the validity of the experiment.

Referring to Tables 1a and 1b it can be seen that the measured natural frequencies match those calculated within 5% in three-quarters of the cases. The maximum discrepancy is 17% for the $n = 2$, $m = 1$, mode in air. Since this error applies to the air results it appears the major part of all errors are due to the well know difficulty of modeling end conditions in an experiment. Also note that the numerically calculated connected mass factor matches the analytical result within 5% (Table 1a).

APPLICATION OF NUMERICAL TECHNIQUE

To illustrate how the numerical technique that has been described can be used to calculate natural frequencies and connected mass factors we calculate these for the core barrel of a pressurized water reactor. We compare these numerical solutions to analytical solutions of Horvay and Bowers [17] which restricts us to specifying simply-supported end conditions. The modes of interest for this problem are the cantilever mode ($n = 1$,

m = 1/2) and the fundamentals of the first few ring modes (n = 2,...,6, m = 1) [25].

The shell is filled with air and surrounded by a thin, fluid annulus of either air or water enclosed by a rigid outer wall. The dynamic pressure, p is held constant at the top and bottom. With reference to Fig. 1 the important parameters are:

a = 1.92 m (76 in.)	ρ_f = 1.2 kg/m^3 (air)
	= 1000 kg/m^3 (water)
b = 2.18 m (86 in.)	ρ_s = 7800 kg/m^3
h = 0.051 m (2 in.)	E = 2.1 x 10^{-11} N/m^2 (30 x 10^{6}psi)
s = 12.91 m (328 in.)	ν = 0.3

The results of these calculations and the comparison with the analytical results are shown in Table 2. The natural frequencies in air were calculated using normal air density. This gives the same frequency as if calculated in a vacuum with the additional benefit of providing a connected mass factor for later use. Comparisons between numerical and analytical results in air were good with a maximum discrepancy of 13%. The frequency for the n = 1, m = 1/2 mode was calculated assuming a simply-supported shell of twice the length and also by assuming a shell of nominal length but fixed at one end. Calculations by the first method gave a natural frequency 23% lower than calculations by the second method. No analytical results were available for comparison to the fixed-free calculation.

The connected mass factors and natural frequencies with the shell filled with air and surrounded by water are shown in the last four columns of Table 2. For the n = 5,6 modes normal shell and fluid densities were used

Table 2 - Pressurized Water Reactor Core
Barrel Natural Frequencies

n	m	End-Conditions	Air		Water			
			Frequency (Hz)		Φ (m)		Frequency (Hz)	
			Present Method	Ref. 17	Present Method	Ref. 17	Present Method	Ref. 17
1	1/2	A	33	35.7	13.6	7.19	6-7	8.18
1	1/2	B	43		9.5 11.5*		8.5-11 8-10*	
1	1	C	105	106.4	9.5 11.5*	5.28	21-25 19-23*	26.2
2	1	C	45	47.7	3.5	3.66	14.5-15.5	15.0
3	1	C	35	38.4	1.7	1.80	16	16.4
4	1	C	53	55.9	1.02	1.07	28	29.2
5	1	C	82	85.0	0.60	0.71	50	50.9
6	1	C	140	121.8	0.45	0.51	80	80.5

Shell End Conditions:

A - Shell simply-supported at both ends but twice as long

B - Shell fixed at one end and free at the other

C - Shell simply-supported at both ends

*Shell filled and surrounded by water.

in the numerical calculation, making the use of their connected mass factors unnecessary. For lower modes, the shell density was increased and the fluid density decreased holding M_{eff} constant so that a stable solution could be obtained. For all but the beam modes ($n = 1$) comparison between numerically and analytically calculated mass factors and frequencies was within 12%.

We assumed that holding the effective mass constant would assure a correct calculation of the natural frequencies no matter what specific values are used for the shell and fluid densities. To check this assumption we increased the shell density and decreased the fluid density while holding the effective mass constant and compared the natural frequencies so calculated. We found, for instance, that for the $n = 1$, $m = 1$ mode the frequency decreased from 25 Hz to 21 Hz (see Table 2) as ρ_s was increased form 8.3×10^4 kg/m^3 to 24.0×10^4 kg/m^3 and the corresponding fluid density decreased from 690 kg/m^3 to 0. For the $n = 2$ mode a 1 Hz difference was found when the densities were changed and for $n = 3,4$ no difference. These frequency differences reflect the accuracy of our numerical technique.

Natural frequencies were also calculated with the shell filled and surrounded by water for the cantilever and first beam mode. As expected, the connected mass factors increased and the frequencies decreased as compared to results for the shell filled with air and surrounded by water.

For the beam modes, only half of the fluid component of the effective mass was used in the analytic calculations. This was a method used by Horvay and Bowers to make their analytical solution conform to Stokes' formula for solid body motion. Our results indicate that the entire effective mass should be used for all modes, including the beam modes, and hence our numerically calculated frequencies are lower than theirs for the beam modes.

Running times for this problem on a CDC 7600 varied according to whether fluid was present or not. With no fluid a 300 time step, 120 space station run took 0.36 min. With fluid only outside the shell it took 0.93 min. With fluid both inside and outside, it took 1.70 min.

CONCLUSION

We have presented a numerical solution technique which can be used to determine the natural frequencies and transient responses of thin cylindrical shells immersed in an incompressible, inviscid fluid. The shell may be filled with fluid, surrounded by fluid, both of these, or immersed in a fluid-filled, stiff-walled coaxial container. Arbitrary radial loads can be applied directly to the shell or over a segment of the outer fluid boundary. Any of the natural boundary conditions can be applied to the ends of the shell. The ends of the fluid regions can be either open or closed.

Direct solution of problems where the ratio of the hydrodynamic forces to the shell inertial forces are greater than two is not possible because of numerical instability. In this regime, an effective mass is calculated to be included as increased shell density, circumventing the numerical instability. This numerical instability is believed to result from the weak coupling between the equations describing the shell and fluid. This weak coupling is represented by the boundary condition equation (9) and is the result of using two separate programs to represent the fluid and shell. Future efforts to remove this instability should be directed toward strong coupling of the equations which will require their reformulation if one desires a fully implicit time integration scheme. An implicit scheme is felt to be necessary to gain steady-state solutions in a reasonable time.

Although solutions to the fluid-shell problem are possible using analytical techniques, only simply-supported shell end conditions have been specified using this approach. Our numerical technique allows specification of any of the natural shell end conditions. Also the analytical solution for a narrow water annulus [17] implies that only one-half the calculated effective mass should be employed to calculate the shell response in the beam mode (n=1). By using our numerical technique, we were able to show that the full effective mass should be used.

Rapid solutions using the numerical technique described here are possible making feasible, design sensitivity studies for problems where resonant conditions are a concern. By use of this technique, placement of pump inlet ports, shell thickness, end conditions, and annular spacings can be established to circumvent resonant conditions and to minimize displacements and stresses.

The most significant contribution from this study is that it provides a verified technique for determining the natural frequencies, modes, effective masses, and displacements of a cylindrical shell immersed in a potential fluid. Other theories either do not directly couple the shell to the fluid, cannot treat the annular geometry, calculate only an r.m.s. displacement, or can only calculate the transient response of a shell to a sudden load such as from a reactor accident.

NOMENCLATURE

$\mathcal{A},\mathcal{B},\mathcal{C}$ = 4 x 4 matrices (B-10)

$\hat{\mathcal{A}},\hat{\mathcal{B}},\hat{\mathcal{C}}$ = block tridiagonal and capacitance matrices (B-14,15, 17)

a = cylinder radius

b = outer annular radius

C = dimensionless damping coefficient $= \dfrac{\lambda a}{[(E)(h)(\rho_s h+\rho_f \Phi)]^{1/2}}$

C_c = critical damping coefficient = $2M_{eff}\Omega$

c = acoustic velocity of fluid

$\mathcal{D}$ = 4 x 4 matrix (10)

$D = \dfrac{h^3 E}{12(1-\nu^2)}$

$\mathcal{E}$ = 4 x 4 matrix (B-10)

E = modulus of elasticity

e_ξ, e_θ = strains at an arbitrary point in the shell

$\mathcal{F}$ = 4 x 4 matrix (10)

F_1, F_2, F_3, F_4, F_4 = functionals

$\mathcal{G}$ = 4 x 4 matrix (10)

$\mathcal{H}$ = 4 x 4 matrix (11)

h = cylinder thickness

I = identity matrix

J = 4 x 4 matrix (11)

K = 4 x 4 matrix (10)

$K = \frac{hE}{(1-\nu^2)}$

L = 4 x 4 matrix (10)

L_{ij} = linear operators for shell equations of motion (A-33a,b,c)

ℓ = 1 x 4 column matrix (11)

M_{eff} = effective mass (13)

$M_\xi, M_\theta, M_{\xi\theta}$ = moment resultants per unit length

$\bar{M}_{\xi\theta}$ = moment resultant per unit length, 1/2 $(M_{\xi\theta} + M_{\theta\xi})$

m = axial half wave number

$N_\xi, N_\theta, N_{\theta\xi}$ = force resultants per unit length

$\bar{N}_{\xi\theta}$ = force resultant per unit length, 1/2 $(N_{\xi\theta} + N_{\theta\xi})$ + 1/4a$(M_{\xi\theta} - M_{\theta\xi})$

$\hat{N}_{\xi\theta}$ = effective membrane shear resultant per unit length (4)

n = circumferential mode number

P = 4 x 4 matrix (B-11a)

p_t, p_o = total and static fluid pressures

p = fluctuating (dynamic) fluid pressure = $p_t - p_o$

Q = 4 x 4 matrix (B-10)

Q_ξ, Q_θ = transverse shear resultants per unit length

$\hat{Q}_\xi$ = transverse shear resultant per unit length (4)

q_e = external shell load per unit area in radial direction

q = total shell load per unit area in radial direction = $p + q_e$

$\mathscr{r}$ = r/a = dimensionless radial coordinate

r = radial coordinate

r_o = inner radius of inner fluid

s = cylinder length

$\hat{\mathscr{s}}, \hat{\mathscr{t}}$ = column vector (B-14,15)

t = time

u, v, w = longitudinal, tangential, and radial displacement of the shell. "w" is positive outward

V, V_o, V' = actual, reference, perturbed fluid velocity

$\mathscr{x}$ = 1 x 4 column matrix (B-11a)

$\bar{\mathscr{x}}$ = 1 x 4 column matrix (B-2)

x = longitudinal (axial) coordinate

$\mathscr{y}, \mathscr{z}$ = 1 x 4 column matrices (10)

$\alpha_1, \alpha_2, \ldots, \alpha_{21}$ = coefficients for shell equations of motion (2)

$\bar{\alpha}_j$ = coefficient for time derivative equation (B-6a)

$\beta_1, \beta_2, \ldots, \beta_{10}$ = coefficients for shell boundary condition (A-21)

$\bar{\beta}_j$ = coefficient for time derivative equation (B-6a)

$\gamma_\xi, \gamma_\theta, \gamma_{\xi r}, \gamma_{\theta r}$ = shear strains

$\bar{\gamma}_j$ = coefficient for time derivative equation (B-6a)

Δ = dimensionless axial space increment = s/aN

$\bar{\delta}_j$ = coefficient for time derivative equation (B-6a)

ε = dimensionless time increment = $(E/\rho_s)^{1/2}(t_{i,j+1} - t_{i,j})/a$

$\epsilon_\xi, \epsilon_\theta, \epsilon_{\xi\theta}$ = normal and shear strains in the shell midsurface

ζ = compressibility factor (A-38c)

$\Theta_\xi, \Theta_\theta, \Theta_r$ = rotations

θ = circumferential angular coordinate

$\kappa_\xi, \kappa_\theta, \kappa_{\xi\theta}$ = changes in curvature of the shell midsurface

$\bar{\kappa}_j$ = coefficient for time derivative equation (B-6b)

Λ = 4 component diagonal matrix (B-2)

λ = viscous damping coefficient

$\bar{\lambda}_j$ = coefficient for time derivative equation (B-6b)

$\bar{\mu}_j$ = coefficient for time derivative equation (B-6b)

ν = poisson's ratio

$\bar{v}_j$ = coefficient for time derivative equation (B-6b)

ξ = x/a = dimensionless longitudinal (axial) coordinate

$\rho_s, \rho_f, \rho_o, \rho'$ = shell, fluid, reference fluid, fluctuating component of fluid mass density

$\sigma_\xi, \sigma_\theta, \sigma_r, \sigma_o$ = longitudinal, tangential, radial, reference stress level

$\tau = (E/\rho_s)^{1/2} t/a$ = dimensionless time

$\hat{T}$ = change in twist of the shell midsurface

Φ = connected mass factor (14)

ϕ = velocity potential of perturbed velocity

$\hat{\Omega}$ = 4 component diagonal matrix (11)

Ω = natural frequency in fluid

ω = natural frequency in vacuo

Indices

- i axial nodes
- j time steps
- k radial nodes
- R+1 outer radial node
- N last axial node
- n Fourier index

ACKNOWLEDGMENTS

Messrs. W. Arnold, V. Karpenko, G. Broadman, and C. Walter of the Lawrence Livermore Laboratory authorized and supported this research. Professors H. Brandt, H. A. Dwyer, and D. C. Karnopp of the University of California at Davis gave technical guidance throughout the project.

REFERENCES

1. Bleich, H. and Baron, M., "Free and Forced Vibrations of an Infinitely Long Cylindrical Shell in an Infinite Acoustic Medium," J. Applied Mechanics, Vol. 76, (1954), pp. 167-177.

2. Mnev, Y. and Pertsev, A., "Hydro Elasticity of Shells," Foreign Technology Division, Wright-Patterson Air Force Base, Ohio, Rpt FTD-MT-24-119-71, (Aug. 1971).

3. Chen, S. and Rosenberg, G., "Dynamics of A Coupled Shell-Fluid System," Nuc. Eng. & Des., Vol. 32, (1975), pp. 302-310.

4. Bowers, G. and Horvay, G., "Forced Vibrations of a Shell Inside of a Narrow Water Annulus," Nuc. Eng. and Des., Vol. 34, (1975), pp. 221-231.

5. Au-Yang, M. K., "Response of Reactor Internals to Fluctuating Pressure Forces," Nuc. Eng. and Design, Vol. 35, (1975), pp. 361-375.

6. Magrad, E. and Burroughs, C., "Forced Harmonic and Random Vibrations of Concentric Cylindrical Shells Immersed in Acoustic Fluids," J. Acoustic Soc. of Am., Vol. 52, (3), Pt. 2, (1971), pp. 858-864.

7. Au-Yang, M. K. and Connelly, W. H., "A Computerized Method for Flow-Induced Random Vibration Analysis of Nuclear Reactor Internals," Nuc. Eng. and Design, Vol. 42, (1977), pp. 257-263.

8. Berger, B. S. and Palmer, M. E., "The Transient Motion of a Cylindrical Shell of Arbitrary Cross Section in an Acoustic Medium," J. Applied Mech., (Sept. 1977), pp. 482-486.

9. Belytschko, T., "Method and Programs for Analysis of Fluid-Structure Systems," Nuc. Eng. and Design, Vol. 42, (1977), pp. 41-52.

10. Sanders, J. L., Jr., "An Improved First-Approximation Theory for Thin Shells," NASA Rept. 24, (1959).

11. Budiansky, B. and Radkowski, P., "Numerical Analysis of Unsymmetrical Bending of Shells of Revolution," AIAA Journal, Vol. 1, No. 8, (1963), pp. 1833-1844.

12. Johnson, D. E. and Greif, R., "Dynamic Response of a Cylindrical Shell: Two Numerical Methods," AIAA Journal, 4, (3), (1966), pp. 486-494.

13. Leissa, A. W., Vibration of Shells, National Aeronautics and Space Administration Report NASA Sp-288, (1973).

14. Lazzeri, L. and Dini, D., "Vibrations of the Internals of Pressurized Water Reactors," Proc. of the First Inter. Conf. on Structural Mechanics in Reactor Technology, Vol. 3, (1971), Paper E/8.

15. Fritz, R., "The Effect of Liquids on the Dynamic Motions of Immersed Solids," Journal of Engineering for Industry, Vol. 94, (Feb. 1972), pp. 167-173.

16. Lazzeri, L. and Dini, D., "Vibrations of a Pendular Structure of Circular Cross-Section Inside a Concentric Pipe," Ingegneria Nucleare, Vol. 10, (4), (1969), pp. 47-58.

17. Horvay, G. and Bowers, G., "Influence of Entrained Water Mass on the Vibration Modes of a Shell," J. of Fluids Engineering, (June 1975), pp. 211-216.

18. Landeau, L. D. and Lifshitz, E. M., Fluid Mechanics, Addison-Wesley, (1959).

19. Houbolt, J. C., "A Recurrent Matrix Solution for the Dynamic Response of Elastic Aircraft," J. of Aeronautic Sciences, (Sept. 1950).

20. Swartzrauber, P. and Sweet, R., "Efficient Fortran Subprogram for the Solution of Elliptic Partial Differential Equations," NCAR-TN-IA-109, Nat'l, Center for Atmospheric Research, Boulder, Colorado, (July 1975).

21. Buzbee, B. L., "A Capacitance Matrix Technique," Sparse Matrix Computations Ed. J. R. Bunch & D. J. Rose, Academic Press, (1976).

22. Madsen, N. K., Lawrence Livermore Laboratory, Private Communication, (1976-1977).

23. Posehn, M. R., Lawrence Livermore Laboratory, Private Communication, (1976-1977).

24. Kraus, H., Thin Elastic Shells, Wiley & Sons, Inc., New York, (1967).

25. Cummings, G. and Feng, W. "Modeling Considerations in the Vibration Analysis of Reactor Internals," Lawrence Livermore Laboratory Report UCRL-52023, (Feb. 1976).

APPENDIX A - DERIVATION OF THE GOVERNING EQUATIONS

In this appendix we will derive the equations of motion for a circular cylindrical shell using Sanders' approximation of thin shell theory. We derive the governing equations for the fluid using cylindrical coordinates and assuming the fluid is inviscid and incompressible. An analytical solution of the fluid-shell problem will be described to explain the concept of "effective mass."

To reduce the dimensionality of the shell theory equations the dependent variables are expanded in Fourier series making the resulting set of equations applicable to an independent circumferential mode. The total solution is the sum of the Fourier series of the modal solutions. Likewise any external forces must be expanded in a Fourier series and the appropriate Fourier coefficient of the force applied to the appropriate modal equations.

SHELL EQUATIONS

The derivation of the shell equations of motion will follow those of Kraus, Leissa, and Johnson and Greif [A-1, A-2, A-3] based on a first approximation theory to thin shells developed by Sanders [A-4]. We found that Sanders' theory gave consistent results matching those found experimentally and analytically. The simpler Donnell method was also tried but we found it did not give consistant results near resonances. Therefore, since Sanders' method required only a small increase in computer time to run a problem compared to the Donnell method, it was used. Sanders formulates the shell theory equations using the principle of virtual work with six "generalized displacements" and six "generalized forces." The generalized forces come from a force and moment balance on a shell element. Alternatively, Donnell [A-2] formulates the equations by dropping the transverse shear resultants Q_ξ and Q_θ from the two tangential force balance equations and neglects the tangential displacements and their derivatives in the strain-displacement equations.

To formulate the shell equations, we start by defining a thin shell as a three dimensional body bounded by two closely spaced curved surfaces, the distance between the surfaces being small in comparison with the other dimensions. The locus of points which lies midway between these surfaces is called the midsurface and the deformation of the shell will be completely determined by the displacements of this midsurface. We will be dealing with closed, circular cylindrical shells with uniform wall thickness. We will be assuming that the material of the shell is linearly elastic, isotropic, and homogeneous and that the effects of rotary inertia and shear deformation can be neglected.

We start by stating Love's postulates which are basic to all thin shell theories and which make use of Kirchhoff's hypothesis:

1. The shell is thin ($h/a < 0.1$)
2. The deflections of the shell are small (linear theory holds)
3. The transverse normal stress can be neglected
4. Normals to the underformed midsurface remain straight and normal to the deformed midsurface and they suffer no extension.

We will then sum the forces and moments which act on a shell element of thickness h to form six equilibrium equations in terms of ten force and moment resultants. We make use of the principle of virtual work, using the equilibrium equations to formulate six generalized forces to go with the six generalized displacements. Integrating the virtual work equation gives the necessary strain-displacement relationship and Hooke's law gives the necessary stress-strain relationships. By integrating the stresses across the thickness of the shell, employing Love's postulates, and using our known strain-displacement relationships we arrive at six force-displacement equations. Now reemploying the principle of virtual work we obtain three equations of equilibrium in terms of six force and moment resultants. Expanding the forces, moments, displacements, and strains in Fourier series

we arrive at four equations of motion for each set of Fourier coefficients (i.e., each circumferential mode) in terms of the midsurface displacements u, v, w, and the axial bending moment M_ξ. The system of equations is eighth order, but by formulating the equations using four dependent variables the highest order derivative is second order. By formulating the equations for each circumferential mode, we have reduced the number of dimensions to two, axial and time.

Equations of Equilibrium

Consider the equilibrium of the shell element of thickness h, shown in Fig. 1, under the influence of the internal force and moment resultants shown. Also shown are the inertial and damping forces per unit surface area and an external surface load acting in the radial direction.

Our previous assumptions imply that the displacements, u and v, and hence strain vary linearly through the shell thickness. We can therefore, with Hooke's law, integrate the resulting stresses over the shell thickness. The resultants of the integrals are the force and moment resultants per unit length.

Love's second postulate implies that the deflections are sufficiently small so that these force and moment resultants can be referred to the undeformed midsurface. Now if we apply Newton's law by summing the forces and moments which act upon the shell element we get the six equations of equilibrium.

$$\frac{\partial N_\xi}{\partial \xi} + \frac{\partial N_{\theta\xi}}{\partial \theta} - a(\rho_s h \frac{\partial^2 u}{\partial t^2} + \lambda \frac{\partial u}{\partial t}) = 0 \qquad \text{(A-1a)}$$

$$\frac{\partial N_\theta}{\partial \theta} + \frac{\partial N_{\xi\theta}}{\partial \xi} + Q_\theta - a(\rho_s h \frac{\partial^2 v}{\partial t^2} + \lambda \frac{\partial v}{\partial t}) = 0 \qquad \text{(A-1b)}$$

$$-N_\theta + \frac{\partial Q_\xi}{\partial \xi} + \frac{\partial Q_\theta}{\partial \theta} - a(\rho_s h \frac{\partial^2 w}{\partial t^2} + \lambda \frac{\partial w}{\partial t} - q) = 0 \qquad \text{(A-1c)}$$

$$\frac{\partial M_\xi}{\partial \xi} + \frac{\partial M_{\theta\xi}}{\partial \theta} - aQ_\xi = 0 \qquad \text{(A-1d)}$$

$$\frac{\partial M_\theta}{\partial \theta} + \frac{\partial M_{\xi\theta}}{\partial \xi} - aQ_\theta = 0 \qquad \text{(A-1e)}$$

$$N_{\xi\theta} - N_{\theta\xi} - \frac{M_{\theta\xi}}{a} = 0 \qquad \text{(A-1f)}$$

In the above N_ξ, $N_{\xi\theta}$, $N_{\theta\xi}$, N_θ are the force resultants; M_ξ, $M_{\xi\theta}$, $M_{\theta\xi}$, M_θ are the moment resultants; Q_ξ and Q_θ the transverse shear resultants; u, v, and w the longitudinal, tangential, and radial midsurface displacements, ρ_s the shell density, and λ, the viscous damping coefficient. The three independent variables are 1) a nondimensional length

$$\xi \equiv x/a$$

with x the length coordinate and a the shell radius, 2) the circumferential angle θ, and 3) the time t.

Principle of Virtual Work

We will now employ the principle of virtual work in terms of the six "generalized displacements" u, v, w, Θ_ξ, Θ_θ, Θ_r where Θ_ξ, Θ_θ, and Θ_r are the rotations about the θ, ξ, and r directions respectively. The equilibrium equations (A - 1a,....f), neglecting body forces and surface loads and for a free shell, are used to obtain the "generalized forces" to go with the "generalized displacements". The principle of virtual work is thus written as,

$$\int_\xi \int_\theta \Bigg[\left(\frac{\partial N_\xi}{\partial \xi} + \frac{\partial N_{\theta\xi}}{\partial \theta} \right) \delta u + \left(\frac{\partial N_\theta}{\partial \theta_\xi} + \frac{\partial N_{\xi\theta}}{\partial \theta} + Q_\theta \right) \delta v$$

$$+ \left(-N_\theta + \frac{\partial Q_\xi}{\partial \xi} + \frac{\partial Q_\theta}{\partial \theta} \right) \delta w + \left(\frac{\partial M_\xi}{\partial \xi} + \frac{\partial M_{\theta\xi}}{\partial \theta} - aQ_\xi \right) \delta \Theta_\xi$$

$$+ \left(\frac{\partial M_\theta}{\partial \theta} + \frac{\partial M_{\xi\theta}}{\partial \xi} - aQ_\theta \right) \delta \Theta_\theta \tag{A-2}$$

$$+ a \left(N_{\xi\theta} - N_{\theta\xi} - \frac{M_{\theta\xi}}{a} \right) \delta \Theta_r \Bigg] d\xi d\theta = 0,$$

with δ standing for "variation of", i.e. δu is the variation of u. Integrating (A-2) by parts yields,

$$\int_\xi \int_\theta \Bigg[N_\xi \delta \left(\frac{\partial u}{\partial \xi} \right) + N_{\xi\theta} \delta \left(\frac{\partial v}{\partial \xi} - a\Theta_r \right) + N_{\theta\xi} \delta \left(\frac{\partial u}{\partial \theta} + a\Theta_r \right)$$

$$+ N_\theta \delta \left(\frac{\partial v}{\partial \theta} + w \right) + Q_\xi \delta \left(\frac{\partial w}{\partial \xi} + a\Theta_\xi \right) + Q_\theta \delta \left(\frac{\partial w}{\partial \theta} - v + a\Theta_\theta \right)$$

$$+ M_\xi \delta \left(\frac{\partial \Theta_\xi}{\partial \xi} \right) + M_{\xi\theta} \delta \left(\frac{\partial \Theta_\theta}{\partial \xi} \right) + M_{\theta\xi} \delta \left(\frac{\partial \Theta_\xi}{\partial \theta} + \Theta_r \right)$$

$$+ M_\theta \delta \left(\frac{\partial \Theta_\theta}{\partial \theta} \right) \Bigg] d\xi d\theta - \oint_C \Bigg\{ \Bigg[N_\xi \delta u + N_{\xi\theta} \delta v + Q_\xi \delta w \tag{A-3}$$

$$+ M_\xi \delta \Theta_\xi + M_{\xi\theta} \delta \Theta_\theta \Bigg] d\theta - \Bigg[N_{\theta\xi} \delta u + N_\theta \delta v + Q_\theta \delta w$$

$$+ M_{\theta\xi} \delta \Theta_\xi + M_\theta \delta \Theta_\theta \Bigg] d\xi \Bigg\} = 0,$$

where the double integral extends over the midsurface of the shell enclosed by the curve C. The double integral represents the virtual change in strain energy within C and the line integral represents the virtual work of the boundary forces. The quantities within the parentheses of (A-3) can be regarded as the strains of the midsurface corresponding to the ten "generalized resultants" $N_\xi, \ldots, M_\theta$ thereby yielding the following strain-displacement relations.

$$\epsilon_\xi = \frac{1}{a}\frac{\partial u}{\partial \xi},\ \epsilon_\theta = \frac{1}{a}\left(\frac{\partial v}{\partial \theta} + w\right),\quad \gamma_\xi = \frac{1}{a}\frac{\partial v}{\partial \xi} - \Theta_r, \gamma_\theta = \frac{1}{a}\frac{\partial u}{\partial \theta} + \Theta_r \qquad \text{(A-4a,b,c,d)}$$

$$\kappa_\xi = \frac{1}{a}\frac{\partial \Theta_\xi}{\partial \xi},\ \kappa_\theta = \frac{1}{a}\frac{\partial \Theta_\theta}{\partial \theta},\quad \kappa_{\xi\theta} = \frac{1}{a}\frac{\partial \Theta_\theta}{\partial \xi},\ \kappa_{\theta\xi} = \frac{1}{a}\frac{\partial \theta_\xi}{\partial \theta} + \frac{\Theta_r}{a} \qquad \text{(A-4e,f,g,h)}$$

$$\gamma_{\xi r} = \frac{1}{a}\frac{\partial w}{\partial \xi} + \Theta_\xi,\ \gamma_{\theta r} = \frac{1}{a}\frac{\partial w}{\partial \theta} - \frac{v}{a} + \Theta_\theta, \qquad \text{(A-4i,j)}$$

where ϵ are the midsurface strains, γ the shear strains, and κ the changes in midsurface curvature. Using Kirchhoff's hypothesis requires that $\gamma_{\xi r} = \gamma_{\theta r} = 0$ giving

$$\Theta_\xi = -\frac{1}{a}\frac{\partial w}{\partial \xi},\ \Theta_\theta = \frac{v}{a} - \frac{1}{a}\frac{\partial w}{\partial \theta} \qquad \text{(A-5a,b)}$$

$$\kappa_\xi = -\frac{1}{a}\frac{\partial^2 w}{\partial \xi^2},\ \kappa_\theta = -\frac{1}{a^2}\left(\frac{\partial^2 w}{\partial \theta^2} - \frac{\partial v}{\partial \theta}\right). \qquad \text{(A-5c,d)}$$

We can put Θ_r in terms of u and v by taking the normal component of the surface curl of the total displacement vector giving

$$\Theta_r = \frac{1}{2a}\left(\frac{\partial v}{\partial \xi} - \frac{\partial u}{\partial \theta}\right) \qquad \text{(A-5e)}$$

From (A-4,A-5) it can be shown that

$$\gamma_\xi = \gamma_\theta, \ \kappa_{\xi\theta} - \kappa_{\theta\xi} = \frac{1}{2a}(\gamma_\xi + \gamma_\theta) \ , \tag{A-6a,b}$$

and if we define

$$\varepsilon_{\xi\theta} \equiv \gamma_\xi + \gamma_\theta, \ T \equiv \kappa_{\xi\theta} + \kappa_{\theta\xi} \tag{A-6c,d}$$

$$\overline{N}_{\xi\theta} \equiv \frac{1}{2}(N_{\xi\theta} + N_{\theta\xi}) + \frac{1}{4a}(M_{\xi\theta} - M_{\theta\xi}) \tag{A-6e}$$

$$\overline{M}_{\xi\theta} \equiv \frac{1}{2}(M_{\xi\theta} + M_{\theta\xi}), \tag{A-6f}$$

then using (A-5c through A-6f) we can rewrite (A-3) as

$$\begin{aligned} &\iint_{\xi\theta} (N_\xi \delta\varepsilon_\xi + \overline{N}_{\xi\theta}\delta\varepsilon_{\xi\theta} + N_\theta\delta\varepsilon_\theta + M_\xi\delta\kappa_\xi + \overline{M}_{\xi\theta}\delta T + M_\theta\delta\kappa_\theta) a d\xi d\theta \\ &- \oint [(N_\xi\delta u + N_{\xi\theta}\delta v + Q_\xi\delta w + M_\xi\delta\Theta_\xi + M_{\xi\theta}\delta\Theta_\theta)\, d\theta \\ &-(N_{\theta\xi}\delta u + N_\theta\delta v + Q_\theta\delta w + M_{\theta\xi}\delta\Theta_\xi + M_\theta\delta\Theta_\theta)\, d\xi] = 0 \end{aligned} \tag{A-7}$$

From the double integral in (A-7), which represents the virtual change in strain energy, the generalized strains $\varepsilon_{\xi\theta}$ and T corresponding to the resultants $\overline{N}_{\xi\theta}$ and $\overline{M}_{\xi\theta}$ are obtained.

$$\varepsilon_{\xi\theta} = \frac{1}{a}\left[\frac{\partial u}{\partial\theta} + \frac{\partial v}{\partial\xi}\right], \quad T = -\frac{1}{a^2}\left[2\frac{\partial^2 w}{\partial\theta\partial\xi} - \frac{3}{2}\frac{\partial v}{\partial\xi} + \frac{1}{2}\frac{\partial u}{\partial\theta}\right] \tag{A-8a,b}$$

We have thus reduced the original set of ten force and moment resultants to six and have arrived at six consistant strain-displacement relationships, equations (A-4a,b; A-5c,d, A-8a,b). The unique contribution of Sanders' theory is the expression for the midsurface twist, T. His formulation has the advantage that it results in zero strain for whole body rotation which is not the case for some of the other shell theories, e.g. Donnell's approximation which neglects the tangential displacements and their

derivatives in equations (A-5d and A-8b). At the same time the six strain relationship's meet the requirements of Love's postulates and in particular Kirchhoff's hypothesis that the strains vary linearly with the shell thickness.

Force and Moment Resultants

Since the total strain, e, at an arbitrary point in the shell varies linearly with r (see A-11a,b,c,) we can integrate the resulting stresses over the shell thickness if we can define the relationship between stress and strain. Such a relationship is provided by Hooke's law which in three dimensional form is,

$$e_\xi = \frac{1}{E}[\sigma_\xi - \nu(\sigma_\theta + \sigma_r)],\ e_\theta = \frac{1}{E}[\sigma_\theta - \nu(\sigma_r + \sigma_\xi)],$$

$$e_r = \frac{1}{E}[\sigma_r - \nu(\sigma_\xi + \sigma_\theta)], \gamma_{\xi\theta} = \frac{2(1+\nu)}{E}\sigma_{\xi\theta},\ \gamma_{\xi r} = \frac{2(1+\nu)}{E}\sigma_{\xi r},$$

$$\gamma_{\theta r} = \frac{2(1+\nu)}{E}\sigma_{\theta r}. \qquad \text{(A-9a)}$$

From Kirchhoff's hypothesis we have $e_r = \gamma_{\xi r} = \gamma_{\theta r} = 0$ giving us

$$\sigma_\xi = \frac{E}{1-\nu^2}(e_\xi + \nu e_\theta),\ \sigma_\theta = \frac{E}{1-\nu^2}(e_\theta + \nu e_\xi),$$

$$\sigma_{\xi\theta} = \frac{E}{2(1+\nu)}\gamma_{\xi\theta} \qquad \text{(A-9b)}$$

If we now integrate the stresses over the faces of the shell element of Fig. 1 and neglect the r/a term in comparison with unity we obtain expressions for the six force and moment resultants.

$$N_\xi = \int_{-h/2}^{h/2} \sigma_\xi dr, \quad N_\theta = \int_{-h/2}^{h/2} \sigma_\theta dr, \quad \bar{N}_{\xi\theta} = \int_{-h/2}^{h/2} \sigma_{\xi\theta} dr \qquad \text{(A-10a,b,c)}$$

$$M_\xi = \int_{-h/2}^{h/2} r\sigma_\xi dr, \quad M_\theta = \int_{-h/2}^{h/2} r\sigma_\theta dr, \quad \bar{M}_{\xi\theta} = \int_{-h/2}^{h/2} r\sigma_{\xi\theta} dr \qquad \text{(A-10d,e,f)}$$

Now from Kirchhoff's hypothesis we have that

$$e_\xi = \varepsilon_\xi + r\kappa_\xi, \; e_\theta = \varepsilon_\theta + r\kappa_\theta, \; \gamma_{\xi\theta} = \varepsilon_{\xi\theta} + rT. \qquad \text{(A-11a,b,c)}$$

Making the necessary substitutions from (A-9, A-10) into (A-11) and performing the integration gives a relationship between the six force and moment resultants and the six terms representing changes in *midsurface* strain, curvature, and twist.

$$N_\xi = K(\varepsilon_\xi + \nu\varepsilon_\theta), \quad N_\theta = K(\varepsilon_\theta + \nu\varepsilon_\xi), \quad \bar{N}_{\xi\theta} = K(1-\nu)\varepsilon_{\xi\theta} \qquad \text{(A-12a,b,c)}$$

$$M_\xi = D(\kappa_\xi + \nu\kappa_\theta), \quad M_\theta = D(\kappa_\theta + \nu\kappa_\xi), \quad \bar{M}_{\xi\theta} = \frac{D}{2}(1-\nu)\,T \qquad \text{(A-12d,e,f)}$$

where $D \equiv \dfrac{h^3E}{12(1-\nu^2)}$ $\qquad K \equiv \dfrac{hE}{(1-\nu^2)}$

Equations of Motions

We are now in a positon to arrive at the equations of motion of a circular cylindrical shell in terms of Sanders' six force and moment resultants as opposed to the eight resultants in the original equilibrium equations (A-1a, b,c,d,e,f). We do this by again applying the principle of virtual work.

Beginning with the virtual change in strain energy due to the internal force and moment resultants as given by the area integral in (A-7), reintroducing the transverse shear resultants Q_ξ and Q_θ, and integrating by parts gives

$$\int_\xi \int_\theta (N_\xi \delta\epsilon_\xi + \overline{N}_{\xi\theta}\delta\epsilon_{\xi\theta} + N_\theta \delta\epsilon_\theta + M_\xi \delta\kappa_\xi + \overline{M}_{\xi\theta}\delta T + M_\theta \delta\kappa_\theta + Q_\xi \delta\gamma_{\xi r}$$

$$+ Q_\theta \delta\gamma_{\theta r})a d_\xi d_\theta = \oint_C [\ \{ N_\xi \delta u + \overline{N}_{\xi\theta}\delta v + Q_\xi \delta w$$

$$+ M_\xi \delta\Theta_\xi + \overline{M}_{\xi\theta}\delta[\Theta_\theta + \frac{v}{2a}]\ \}\ d\theta - \{N_\theta \delta v + \overline{N}_{\xi\theta}\delta u \qquad \text{(A-13a)}$$

$$+ Q_\theta \delta w + M_\theta \delta\Theta_\theta + \overline{M}_{\xi\theta}\delta\ [\Theta_\xi + \frac{u}{2a}]\}\ d\xi]$$

$$- \int_\xi \int_\theta (F_1 \delta u + F_2 \delta v + F_3 \delta w + F_4 \delta\Theta_\xi + F_5 \delta\Theta_\theta) d\xi d\theta$$

where

$$F_1 = \frac{\partial N_\xi}{\partial \xi} + \frac{\partial \overline{N}_{\xi\theta}}{\partial \theta} - \frac{1}{2a}\frac{\partial \overline{M}_{\xi\theta}}{\partial \theta} \qquad \text{(A-13b)}$$

$$F_2 = \frac{\partial N_\theta}{\partial \theta} + \frac{\partial \overline{N}_{\xi\theta}}{\partial \xi} + \frac{1}{2a}\frac{\partial \overline{M}_{\xi\theta}}{\partial \xi} + Q_\theta \qquad \text{(A-13c)}$$

$$F_3 = - N_\theta + \frac{\partial Q_\xi}{\partial \xi} + \frac{\partial Q_\theta}{\partial \theta} \qquad \text{(A-13d)}$$

$$F_4 = \frac{\partial M_\xi}{\partial \xi} + \frac{\partial \overline{M}_{\xi\theta}}{\partial \theta} - aQ_\xi \qquad \text{(A-13e)}$$

$$F_5 = \frac{\partial M_\theta}{\partial \theta} + \frac{\partial \overline{M}_{\xi\theta}}{\partial \xi} - aQ_\theta \qquad \text{(A-13f)}$$

For the shell to be in equilibrium, the principle of virtual work requires that the lefthand side of (A-13a) must be equal to the line integral on the right-hand side, in which case the area integral on the right-hand side must vanish. Because the virtual displacements $\delta u, \ldots\ldots, \delta\Theta_\theta$ are independent and arbitrary, each term of the area integral must vanish independently. Thus, setting

$$F_1 = F_2 = F_3 = F_4 = F_5 = 0$$

in (A-13) gives the modified equations of equilibrium for the internal forces resulting from Sanders' theory. Adding back to the equilibrium equations the appropriate inertial, damping, and surface load terms gives the corresponding equations of motion.

One additional step reduces the number of equations of motion from five to three. This is done by solving (A-13e,f) for Q_ξ and Q_θ and substituting these results into (A-13b,c,d) giving

$$\frac{\partial N_\xi}{\partial \xi} + \frac{\partial \bar{N}_{\xi\theta}}{\partial \theta} - \frac{1}{2a}\frac{\partial \bar{M}_{\xi\theta}}{\partial \theta} - \frac{Eh}{a}\frac{\partial^2 u}{\partial \tau^2} - \lambda\sqrt{\frac{E}{\rho_s}}\frac{\partial u}{\partial \tau} = 0$$

$$\frac{\partial N_\theta}{\partial \theta} + \frac{\partial \bar{N}_{\xi\theta}}{\partial \xi} + \frac{3}{2a}\frac{\partial \bar{M}_{\xi\theta}}{\partial \xi} + \frac{1}{a}\frac{\partial M_\theta}{\partial \theta} - \frac{Eh}{a}\frac{\partial^2 v}{\partial \tau^2} - \lambda\sqrt{\frac{E}{\rho_s}}\frac{\partial v}{\partial \tau} = 0$$

$$-N_\theta + \frac{1}{a}\left[\frac{\partial^2 M_\xi}{\partial \xi^2} + 2\frac{\partial^2 \bar{M}_{\xi\theta}}{\partial \xi \partial \theta} + \frac{\partial^2 M_\theta}{\partial \theta^2}\right] - \frac{Eh}{a}\frac{\partial^2 w}{\partial \tau^2} \qquad (1)^*$$

$$- \lambda\sqrt{\frac{E}{\rho_s}}\frac{\partial w}{\partial \tau} + aq = 0,$$

where we have introduced the dimensionless time variable, τ.

$$\tau \equiv \sqrt{\frac{E}{\rho_s}}\,\frac{t}{a} \qquad \text{(A-14)}$$

Boundary Conditions

The natural boundary conditions associated with Sanders' equations of equilibrium are obtained by setting the virtual work of the forces acting on the boundaries of the shell equal to zero. Thus from (A-13a) we get at the ends of the cylinder ($\xi = 0, s/a$),

*Number refers to equations in main body of report

$$
\begin{aligned}
&N_\xi && \text{or } u = 0 \\
&\hat{N}_{\xi\theta} \equiv \left[\bar{N}_{\xi\theta} + \frac{3}{2a}\bar{M}_{\xi\theta}\right] && \text{or } v = 0 \\
&\hat{Q}_\xi \equiv \left[\frac{\partial M_\xi}{\partial \xi} + 2\frac{\partial \bar{M}_{\xi\theta}}{\partial \theta}\right] && \text{or } w = 0 \\
&M_\xi && \text{or } \Theta_\xi = 0
\end{aligned}
\tag{4}
$$

where $\hat{N}_{\xi\theta}$ and $\hat{Q}_\xi$ can be thought of as effective membrane and transverse shear resultants per unit length. Any combination of four conditions must be prescribed at each end of the cylinder.

Fourier Series Expansion

Our ultimate goal is to arrive at a set of four dimensionless, coupled, partial differential equations in terms of the four dependent variables, u, v, w, M_ξ and the two independent variables ξ and τ, a dimensionless space and time. In order to do this we first expand all the force and moment resultants, displacements, and strains into Fourier series in the circumferential variable θ to eliminate the θ dimension. We then make use of a reference stress level, σ_o, to make all the Fourier coefficients dimensionless.

$$N_\xi = \sigma_o h \sum_{n=0}^{\infty} N_{\xi n} \cos n\theta \qquad N_\theta = \sigma_o h \sum_{n=0}^{\infty} N_{\theta n} \cos n\theta \tag{A-15a,b}$$

$$\bar{N}_{\xi\theta} = \sigma_o h \sum_{n=1}^{\infty} N_{\xi\theta n} \sin n\theta \tag{A-15c}$$

$$M_\xi = \frac{\sigma_o h^3}{a} \sum_{n=0}^{\infty} M_{\xi n} \cos n\theta \qquad M_\theta = \frac{\sigma_o h^3}{a} \sum_{n=0}^{\infty} M_{\theta n} \cos n\theta \tag{3d,A-15d}$$

$$\overline{M}_{\xi\theta} = \frac{\sigma_0 h^3}{a} \sum_{n=1}^{\infty} M_{\xi\theta n} \sin n\theta \qquad \text{(A-15e)}$$

$$u = \frac{a\sigma_0}{E} \sum_{n=0}^{\infty} u_n \cos n\theta \qquad v = \frac{a\sigma_0}{E} \sum_{n=1}^{\infty} v_n \sin n\theta \qquad \text{(3a,b)}$$

$$w = \frac{a\sigma_0}{E} \sum_{n=0}^{\infty} w_n \cos n\theta \qquad \Theta_\xi = \frac{\sigma}{E} \sum_{n=0}^{\infty} \Theta_{\xi n} \cos n\theta \qquad \text{(3c,A-16a)}$$

$$\varepsilon_\xi = \frac{\sigma_0}{E} \sum_{n=0}^{\infty} \varepsilon_{\xi n} \cos n\theta \qquad \varepsilon_\theta = \frac{\sigma_0}{E} \sum_{n=0}^{\infty} \varepsilon_{\theta n} \cos n\theta \qquad \text{(A-16b,c)}$$

$$\varepsilon_{\xi\theta} = \frac{\sigma_0}{E} \sum_{n=1}^{\infty} c_{\xi\theta n} \sin n\theta \qquad \text{(A-16d)}$$

$$\kappa_\xi = \frac{\sigma_0}{aE} \sum_{n=0}^{\infty} \kappa_{\xi n} \cos n\theta \qquad \kappa_\theta = \frac{\sigma}{aE} \sum_{n=0}^{\infty} \kappa_{\theta n} \cos n\theta \qquad \text{(A-16e,f)}$$

$$T = \frac{\sigma_0}{aE} \sum_{n=1}^{\infty} T_n \sin n\theta \qquad \text{(A-16g)}$$

$$q = \frac{\sigma_0 h}{a} \sum_{n=0}^{\infty} q_n \cos n\theta \qquad \text{(3e)}$$

If now (3,A-15) are substituted into (1) we obtain the three equations of motion uncoupled in the Fourier index n. The equations of motion become

$$N'_{\xi n} + nN_{\xi\theta n} - \frac{nh^2}{2a^2} M_{\xi\theta n} - \ddot{u}_n - C\dot{u}_n = 0 \qquad \text{(A-17a)}$$

$$N'_{\xi\theta n} - nN_{\theta n} - \frac{nh^2}{a^2} M_{\theta n} + \frac{3h^2}{2a^2} M'_{\xi\theta n} - \ddot{v}_n - Cv_n = 0 \qquad \text{(A-17b)}$$

$$-N_{\theta n} + \frac{h^2}{a^2} (M''_{\xi n} - n^2 M_{\theta n} + 2nM'_{\xi\theta n}) - \ddot{w}_n - \dot{w}_n + q_n = 0, \qquad \text{(A-17c)}$$

where the variables are the dimensionless Fourier coefficients. The derivatives with respect to ξ and τ are denoted by primes and dots, respectively. C is a dimensionless damping coefficient. The rotation, strain-displacement, and stress-strain relations for each n are obtained in a similar manner using (A-4a,b,; A-5a,c,d; A-8a,b,; A-12a,b,c,d,e,f) and (3,A-15, A-16) as appropriate. Making the necessary substitutions we get

$$\varepsilon_{\xi n} = u_n', \quad \varepsilon_{\theta n} = nv_n + w_n, \quad \varepsilon_{\xi\theta n} = 1/2\,[v_n' - nu_n] \qquad \text{(A-18a,b,c)}$$

$$\kappa_{\xi n} = -\,w_n'', \quad \kappa_{\theta n} = n^2 w_n + nv_n, \quad \Theta_{\xi n} = -\,w_n' \qquad \text{(A-18d,e,f)}$$

$$T_n = 2nw_n' + \frac{3}{2}\,v_n' + \frac{n}{2}\,u_n \qquad \text{(A-18g)}$$

$$N_{\xi n} = \frac{1}{1-\nu^2}\,(\varepsilon_{\xi n} + \nu\varepsilon_{\theta n}) \qquad \text{(A-18h)}$$

$$N_{\theta n} = \frac{1}{1-\nu^2}\,(\varepsilon_{\theta} + \nu\varepsilon_{\xi n}), \quad N_{\xi\theta n} = \frac{1}{1+\nu}\,\varepsilon_{\xi\theta n} \qquad \text{(A-18i,j)}$$

$$M_{\xi n} = \frac{1}{12(1-\nu^2)}\,(\kappa_{\xi n} + \nu\kappa_{\theta n}), \qquad \text{(A-18k)}$$

$$M_{\theta n} = \frac{1}{12(1-\nu^2)}\,(\kappa_{\theta n} + \nu\kappa_{\xi n}), \quad M_{\xi\theta n} = \frac{1}{24(1+\nu)}\,T_n \qquad \text{(A-18l,m)}$$

Substitution of equations (A-18 a,...,m) into equations (A-17a,b,c) will lead to three coupled partial differential equations with u_n, v_n, and w_n as the dependent variables. The highest order derivative will be a term containing the fourth derivative of w_n. However, it will be convenient to limit the highest order space derivative to the second order. Consequently, u_n, v_n, w_n, and $M_{\xi n}$ will be used as dependent variables and four coupled partial differential equations will be derived. The definition of $M_{\xi n}$ (equation A-18k) in terms of $\kappa_{\xi n}$ (equation A-18d) and $\kappa_{\theta n}$ (equation A-18e) provides the fourth equation. The desired equations of motion for a circular cylindrical shell for one set of Fourier components is thus

$$\alpha_1 u_n'' + \alpha_2 u_n + \alpha_3 v_n' + \alpha_4 w_n' = \ddot{u}_n + C\dot{u}_n \tag{2a}$$

$$\alpha_5 u_n' + \alpha_6 v_n'' + \alpha_7 v_n + \alpha_8 w_n'' + \alpha_9 w_n + \alpha_{10} M_{\xi n} = \ddot{v}_n + C\dot{v}_n \tag{2b}$$

$$\alpha_{11} u_n' + \alpha_{12} v_n'' + \alpha_{13} v_n + \alpha_{14} w_n'' + \alpha_{15} w_n + \alpha_{16} M_{\xi n}'' + \alpha_{17} M_{\xi n} = \ddot{w}_n + C\dot{w}_n - q_n \tag{2c}$$

$$\alpha_{18} v_n + \alpha_{19} w_n'' + \alpha_{20} w_n + \alpha_{21} M_{\xi n} = 0. \tag{2d}$$

The coefficients for these equations are shown in Table A-1.

The boundary conditions (4) must also be described in terms of Fourier components. To do this we first expand the effective membrane and transverse shear resultants into Fourier series with dimensionless coefficients.

TABLE A-1

Formulas for Coefficients of Shell

Equations of Motion, Eqs 2a,...,2d

$\alpha_1 = \frac{1}{1 - \nu^2}$	$\alpha_{11} = - \alpha_4$
$\alpha_2 = - \frac{n^2}{2(1 + \nu)} [1 + \frac{h^2}{48a^2}]$	$\alpha_{12} = \alpha_8$
$\alpha_3 = \frac{n}{2} [\frac{1}{1 - \nu} - \frac{h^2}{16a^2(1 + \nu)}]$	$\alpha_{13} = \alpha_9$
$\alpha_4 = \frac{\nu}{1 - \nu^2} - \frac{n^2h^2}{24a^2(1 + \nu)}$	$\alpha_{14} = \frac{n^2h^2}{6a^2(1 + \nu)}$
$\alpha_5 = - \alpha_3$	$\alpha_{15} = - [\frac{1}{1 - \nu^2} + \frac{n^4h^2}{12a^2}]$
$\alpha_6 = \frac{1}{2(1 + \nu)} [1 + \frac{3h^2}{16a^2}]$	$\alpha_{16} = \frac{h^2}{a^2}$
$\alpha_7 = - n^2[\frac{1}{1 - \nu^2} + \frac{h^2}{12a^2}]$	$\alpha_{17} = n\alpha_{10}$
$\alpha_8 = \frac{nh^2}{8a^2(1 + \nu)}$	$\alpha_{18} = \frac{n\nu}{12(1 - \nu^2)}$
$\alpha_9 = - \frac{n}{1 - \nu^2} - \frac{n^3h^2}{12a^2}$	$\alpha_{19} = - \frac{1}{12(1 - \nu^2)}$
$\alpha_{10} = - \frac{\nu nh^2}{a^2}$	$\alpha_{20} = n\alpha_{18}$
$\alpha_{21} = - 1$	

$$\hat{N}_{\xi\theta} = \sigma_o h \sum_{n=1}^{\infty} \hat{N}_{\xi\theta n} \sin n\theta \tag{A-19a}$$

$$\hat{Q}_{\xi} = \sigma_o h \sum_{n=0}^{\infty} \hat{Q}_{\xi n} \cos n\theta \tag{A-19b}$$

Now making use of the relationships describing $\hat{N}_{\xi\theta}$ and $\hat{Q}_{\xi}$ (4) for arbitrary n we have

$$\hat{N}_{\xi\theta n} = \bar{N}_{\xi\theta n} + \frac{3h^2}{2a^2} \bar{M}_{\xi\theta n} \tag{A-20a}$$

$$\hat{Q}_{\xi n} = \frac{h^2}{a^2} [M'_{\xi n} + 2n\bar{M}_{\xi\theta n}] \tag{A-20b}$$

The right hand side of these equations can be put in terms of displacements and it follows from (A-18) that

$$N_{\xi n} = \beta_1 u'_n + \beta_2 v_n + \beta_3 w_n \tag{A-21a}$$

$$\hat{N}_{\xi\theta n} = \beta_4 u_n + \beta_5 v'_n + \beta_6 w'_n \tag{A-21b}$$

$$\hat{Q}_{\xi n} = \beta_7 u_n + \beta_8 v'_n + \beta_9 w'_n + \beta_{10} M'_{\xi n} \tag{A-21c}$$

where the coefficients, β, are shown in Table A-2. The boundary conditions may now be rewritten, for the nth Fourier component, as prescribing the following dimensionless quantities at the ends of the cylinder, $\xi = o, s/a$.

$$N_{\xi n} \quad \text{or} \quad u_n = 0 \tag{A-22a}$$

$$\hat{N}_{\xi\theta n} \quad \text{or} \quad v_n = 0 \tag{A-22b}$$

Table A-2

Formulas for the Coefficients of the End Condition Equations, Equations A-21a,b,c

$\beta_1 = \frac{1}{1-\nu^2}$	$\beta_6 = \frac{nh^2}{8a^2(1+\nu)}$
$\beta_2 = \frac{\nu n}{1-\nu^2}$	$\beta_7 = \frac{n}{8}\beta_6$
$\beta_3 = \frac{\nu}{1-\nu^2}$	$\beta_8 = \beta_6$
$\beta_4 = -\frac{n}{2(1+\nu)}\left[-1+\frac{h^2}{16a^2}\right]$	$\beta_9 = \frac{4}{3}n\beta_6$
$\beta_5 = \frac{1}{2(1+\nu)}\left[1+\frac{3h^2}{16a^2}\right]$	$\beta_{10} = \frac{h^2}{a^2}$

$$\hat{Q}_{\xi n} \quad \text{or} \quad w_n = 0 \tag{A-22c}$$

$$M_{\xi n} \quad \text{or} \quad \Theta_{\xi n} = 0 \tag{A-22d}$$

FLUID EQUATIONS

The assumption will be made that the fluid is inviscid, incompressible, and has no gross motion. With these assumptions the fluid can be represented by one dependent variable, the dynamic pressure p. We will

expand p into a Fourier series and in turn obtain a differential equation for each Fourier component of p in terms of the independent variables ξ, κ, τ, where κ is a dimensionless radial coordinate, $\kappa = r/a$. Each such Fourier component of the dynamic pressure, when evaluated at the cylinder wall, will act as an additional shell loading to be included with the equations of motion for the Fourier components of the shell variables. This implies that the pressure belonging to a given circumferential mode does not excite other than its matching structural mode, an assumption usually made in modal analysis.

We start with the equation of motion for inviscid, compressible fluids (Euler's equation) and the continuity equation [A-5].

$$\rho_f\left(\frac{\partial}{\partial t} + V\cdot\nabla\right) V + \nabla p_t = 0 \tag{A-23a}$$

$$\frac{\partial \rho_f}{\partial t} + \text{div}\,(\rho_f V) = 0 \tag{A-23b}$$

Here we are taking ρ_f as the fluid density, V as the fluid velocity, and p_t as the total fluid pressure. For small osillations we assume the convective terms $(V\cdot\nabla)V$ can be neglected. Now if we assume the density, velocity, and pressure are made up of main plus perturbed components,

$\rho_f = \rho_0 + \rho'$, $V = V_0 + V'$, $p_t = p_0 + p$ and assuming $p_t \gg p$, $\rho_0 \gg \rho'$ we have

$$\frac{\partial V'}{\partial t} + \frac{1}{\rho_f}\,\text{grad}\ p = 0 \tag{A-24a}$$

$$\frac{\partial \rho'}{\partial t} + \rho_f\,\text{div}\ V' = 0. \tag{A-24b}$$

These equations will hold if $V' \ll c$, the acoustic velocity of the fluid. Typically, for instance in a pressurized water reactor, we are interested in $V' \ll 1000$ in/sec and in general $c > 45{,}000$ in/sec.

Assuming adiabatic flow, the wave motion in the fluid can be represented by

$$p/\rho_f' = c^2. \tag{A-25}$$

If we solve (A-25) for p and substitute into (A-24b), differentiate the result with respect to time and substitute in the equivalent of $\partial V'/\partial t$ from (A-24a) we obtain the wave equation in terms of the dynamic pressure, p.

$$\nabla^2 p = \frac{1}{c^2} \frac{\partial^2 p}{\partial t^2} \tag{5}$$

Assuming the fluid incompressible requires that $c \to \infty$ and so the time derivative drops out. If we now represent (5) in cylindrical coordinates we obtain

$$\frac{\partial^2 p}{\partial r^2} + \frac{1}{r} \frac{\partial p}{\partial r} + \frac{1}{r^2} \frac{\partial^2 p}{\partial \theta^2} + \frac{\partial^2 p}{\partial \xi^2} = 0 \tag{A-26}$$

We will now expand p in a Fourier series and make the Fourier coefficients dimensionless giving

$$p = \frac{\sigma_o h}{a} \sum_{n=o}^{\infty} p_n \cos n\theta \tag{A-27}$$

If we substitute (A-27) into (A-26) we get our desired dimensionless equation in terms of the nth Fourier component of the dynamic pressure.

$$\frac{\partial^2 p_n}{\partial r^2} + \frac{1}{r} \frac{\partial p_n}{\partial r} - \frac{n^2}{r^2} p_n + \frac{\partial^2 p_n}{\partial \xi^2} = 0 \tag{6}$$

Boundary Conditions

Equation (6) is a form of the Helmholtz equation and requires boundary conditions to be specified over the top and bottom and on the inner and outer surfaces of the fluid region. Over the top or bottom either Dirichlet ($p=0$) or Neumann ($\partial p/\partial \xi=0$) boundary conditions can be employed depending on whether the top and bottom are open or closed.

$$p_n\Big|_{\xi=0} = 0 \qquad \text{or} \qquad \frac{\partial p_n}{\partial \xi}\Big|_{\xi=0} = 0 \tag{A-28}$$

$$p_n\Big|_{\xi=s/a} = 0 \qquad \text{or} \qquad \frac{\partial p_n}{\partial \xi}\Big|_{\xi=s/a} = 0 \tag{A-29}$$

We will note from Fig. 1 that we have two fluid regions to consider, the fluid inside the cylinder and the fluid outside. For the inner fluid we neglect the fluid inside small radius r_o so as to eliminate the singularity at $r = 0$. One way to determine the location of r_o is by calculating the "effective mass" [A-6] needed to account for the shell's response when filled with fluid and calculating what fluid thickness this represents. This fluid thickness is then subtracted from the shell radius to get r_o.

The outer radius of the inner fluid is the shell wall and the adhesion condition requires that the shell and fluid radial velocities match over this surface. If we define a velocity potential of the perturbed velocity as $V' = \text{grad}\ \phi$ then we have for the adhesion condition that

$$\frac{\partial w}{\partial t} = \frac{\partial \phi}{\partial r}\Big|_{r=a} \tag{A-30}$$

and from (A-24a) that

$$p = -\rho_o \frac{\partial \phi}{\partial t} \tag{A-31}$$

Combining these and using the nondimensional variables gives

$$\frac{\partial p_n}{\partial r} = \pm \frac{a}{h} \frac{\rho_f}{\rho_s} \ddot{w}_n \tag{9}$$

as a representation of the adhesion boundary condition.

For the inner fluid the radial boundary conditions are

$$\left.\frac{\partial p_n}{\partial r}\right|_{r=r_o/a} = 0 \quad \text{and} \quad \left.\frac{\partial p_n}{\partial r}\right|_{r=1} = \frac{a}{h} \frac{\rho_f}{\rho_s} \ddot{w}_n \tag{A-32a}$$

For the outer fluid the radial boundary conditions are

$$\left.\frac{\partial p_n}{\partial r}\right|_{r=b/a} = 0 \quad \text{and} \quad \left.\frac{\partial p_n}{\partial r}\right|_{r=1} = -\frac{a}{h} \frac{\rho_f}{\rho_s} \ddot{w}_n \tag{A-32b}$$

where b is the outside boundary of the outer fluid.

ANALYTICAL SOLUTION

To explore the region over which the incompressibility assumption is valid and to derive an expression for the "effective mass" we will examine an analytical solution to the fluid-shell problem. We will, in general, follow the solution techniques presented by Mnev and Pertsev [A-7] for an infinitely long (or simply-supported) circular cylindrical shell surrounded by a thin annular fluid region whose outer boundary is rigid. The previous assumptions of Love's postulates for the shell and an inviscid, stationery fluid will be retained. However, for present purposes, the fluid will be assumed compressible.

We start with the three shell equations of motion described in terms of the shell *midsurface* displacements u, v, and w. We will assume no external load on the shell other than that due to the fluid's resistance to shell motion and no damping. We obtain

$$L_{11}u + L_{12}v + L_{13}w = \rho_s h \frac{\partial^2 u}{\partial t} \tag{A-33a}$$

$$L_{21}u + L_{22}v + L_{23}w = \rho_s h \frac{\partial^2 v}{\partial t^2} \tag{A-33b}$$

$$L_{31}u + L_{32}v + L_{33}w = \rho_s h \frac{\partial^2 w}{\partial t^2} - p \tag{A-33c}$$

where p is the fluid dynamic pressure and is negative if the pressure is external. The L_{ij} are linear operators defined by the particular formulation of the shell equations used.

The fluid is described by the acoustic wave equation which for convenience has been cast in terms of the velocity potential, ϕ. The equation and boundary conditions are

$$\nabla^2\phi = \frac{\partial^2\phi}{\partial r^2} + \frac{1}{r}\frac{\partial\phi}{\partial r} + \frac{1}{r^2}\frac{\partial^2\phi}{\partial\theta^2} + \frac{\partial^2\phi}{\partial x^2} = \frac{1}{c^2}\frac{\partial^2\phi}{\partial t^2}$$

$$\left.\frac{\partial\phi}{\partial r}\right|_{r=a} = \frac{\partial w}{\partial t}, \quad \left.\frac{\partial\phi}{\partial r}\right|_{r=b} = 0 \tag{A-34}$$

Equation (A-33) will admit solutions of the form

$$u = u_0 \cos\frac{\pi m x}{s} \cos n\theta \sin\Omega t \tag{A-35a}$$

$$v = v_0 \sin\frac{\pi m x}{s} \sin n\theta \sin\Omega t \tag{A-35b}$$

$$w = w_0 \sin\frac{\pi m x}{s} \cos n\theta \sin\Omega t \tag{A-35c}$$

where u_0, v_0, w_0 are constants, m is the number of axial nodes less one, and Ω is the natural frequency of vibration. We can represent ϕ by

$$\phi = T(t)\, R(r) \sin \frac{\pi m x}{s} \cos n\theta \tag{A-35d}$$

where T(t) and R(r) are yet to be determined. The adhesion condition can be used to determine T(t) giving

$$T(t) = \frac{\Omega w_0}{dR/dr\big|_{r=a}} \cos\Omega t \tag{A-36}$$

If we substitute (A-35d) into (A-34) and make use of (A-36) we obtain a Bessel equation of order n.

$$r^2 \frac{\partial^2 R}{\partial r^2} + r \frac{\partial R}{\partial r} - \left[\left(\frac{\pi m \zeta r}{s}\right)^2 + n^2\right] R = 0 \tag{A-37}$$

The solution is in the form of nth order Bessel functions

$$R(r) = \begin{cases} A_1 I_n \left(\frac{\pi m \zeta r}{s}\right) + A_2 K_n \left(\frac{\pi m \zeta r}{s}\right), & \Omega < \frac{c\pi}{s} \quad \text{(A-38a)} \\ B_1 J_n \left(\frac{\pi m \bar{\zeta} r}{s}\right) + B_2 Y_n \left(\frac{\pi m \bar{\zeta} r}{s}\right), & \Omega > \frac{c\pi}{s} \quad \text{(A-38b)} \end{cases}$$

where J_n, Y_n are Bessel functions of the first and second kind and I_n, K_n are modified Bessel functions of the first and second kind. Here we define

$$\zeta \equiv \sqrt{1 - \left(\frac{\Omega s}{\pi c m}\right)^2} \quad \text{and} \quad \bar{\zeta} = \sqrt{-1}\ \zeta. \tag{A-38c}$$

Using the boundary condition at the outer fluid boundary we find that

$$\phi(x,r,\theta) = w_0 \Omega \cos\Omega t \sin \frac{\pi m x}{s} \cos n\theta \frac{R\big|_{r=b}}{\partial R/\partial r\big|_{r=a}} \tag{A-39}$$

and if we differentiate with respect to time and substitute into (A-31) we obtain

$$p|_{r=a} = - \rho_f \frac{\partial\phi}{\partial t} = \rho_f w_0 \Omega^2 \sin\Omega t \sin\frac{\pi m x}{s} \cos n\theta \frac{R|_{r=b}}{\partial R/\partial r|_{r=a}} \tag{A-40}$$

If we substitute this expression for the fluid dynamic pressure into the third shell equation of motion (A-33c) we arrive at

$$L_{31}u + L_{32}v + L_{33}w = (\rho_s h + \rho_f \Phi) \frac{\partial^2 w}{\partial t^2} \tag{A-41}$$

where we define

$$\Phi\ (n,m,a,b,\zeta,s) = - \frac{R(b)}{\partial R/\partial r|_{r=a}} \tag{A-42}$$

The term $\rho_f \Phi$ characterizes the inertial counteraction of the medium to the vibration of the shell within the limits of the given natural frequency for that mode and can be termed the connected mass of the fluid. We will note that Φ depends on the circumferential mode number n, the axial mode number m, shell length s, shell radius a, outer fluid radius b, and the compressibility factor ζ. If the shell is excited primarily in one mode then its motion could be properly calculated by replacing the normal mass, $\rho_s h$, by an "effective mass" M_{eff}, equal to the sum of the normal shell mass and the connected mass of the fluid for the mode.

$$M_{eff} = \rho_s h + \rho_f \Phi \tag{13}$$

When using thin shell theory it has been shown [A-1] that, in vacuo three natural frequencies are excited for each (n,m) mode, the lowest of which causes predominately radial motion. Mnev and Pertsev [A-7] and Bleich and Baron [A-8] have shown that when the shell is immersed in a dense fluid only this lowest frequency is of consequence. With these simplifications the natural frequency of each mode in a fluid is related to the shell natural frequencies in vacuo by

$$\Omega = \frac{\omega}{\sqrt{1 + \frac{\rho_f \Phi}{\rho_s h}}} \tag{A-43}$$

where ω is the lowest natural frequency of the (n, m) mode in vacuo.

Equation (A-43) is a difficult transcendental equation to solve for a compressible fluid. If, however,

$$\left(\frac{\Omega s}{\pi c m}\right)^2 << 1 \tag{8}$$

then from (A-38) and (A-42) it can be seen that Φ is no longer a function of Ω and the calculation of the natural frequencies is reduced simply to the computation of the connected mass factor Φ. The equations of motion of the shell (A-33a,b; A-41) can be employed with the use of Φ to describe the shell motion independent of the fluid.

The inequality of (8) is met for an incompressible fluid since $c \to \infty$. Thus, for incompressible fluids the effective mass is easier to calculate.

To determine when a fluid can be considered incompressible the inequality of (8) can be used. A supplementary criteria can be determined using the coefficient before R(r) in (A-37)

$$\left(\frac{\pi m r}{s}\right)^2 - \left(\frac{\Omega r}{c}\right)^2 + n^2. \tag{A-44a}$$

With $c \to \infty$ this reduces to

$$\frac{\pi^2 m^2 r^2}{s^2} + n^2. \tag{A-44b}$$

Comparing (A-44a) and (A-44b) it is evident that the liquid behaves as an incompressible medium on the condition that

$$\frac{\Omega^2 b^2}{c^2(n^2 + \frac{\pi^2 m^2 b^2}{s^2})} \ll 1 \tag{7}$$

Therefore either (7) or (8) can be used to determine whether the fluid should be considered incompressible.

REFERENCES FOR APPENDIX A

A-1. Kraus, H., Thin Elastic Shells, Wiley & Sons, Inc., New York, (1967).

A-2. Leissa, A. W., "Vibration of Shells," National Aeronautics and Space Administration Report NASA SP-288, (1973).

A-3. Johnson, D. E. and Greif, R., "Dynamic Response of a Cylindrical Shell: Two Numerical Methods", AIAA Journal, Vol. 4, No. 3, (1966) pp. 486-494.

A-4. Sanders, J. L., Jr., "An Improved First-Approximation Theory for Thin Shells", NASA Rept. 24, (1959).

A-5. Landau, L. D. and Lifshitz, E. M., Fluid Mechanics, Addison-Wesley, (1959).

A-6. Cummings, G. and Feng, W., "Modeling Considerations in the Vibration Analysis of Reactor Internals", Lawrence Livermore Laboratory Report UCRL-52023, (Feb. 1976).

A-7. Mnev, Y. and Pertsev, A., "Hydro-Elasticity of Shells", Foreign Technology Division, Wright-Patterson Air Force Base, Ohio, RPT. FTD-MT-24-119-71, (Aug. 1971).

A-8. Bleich, H. and Baron, M., "Free and Forced Vibrations of an Infinitely Long Cylindrical Shell in an Infinite Acoustic Medium," J. Applied Mechanics, Vol. 76, (1954), pp. 167-177.

APPENDIX B - DEVELOPMENT OF EQUATIONS USED FOR COMPUTATION

In this appendix, we convert the governing equations developed in Appendix A into the difference equations we will use for numerical computation in the computer code SHELVIB.

We will start by casting the shell equations of motion, equations (2) into matrix form. Another matrix equation is developed to describe the shell end conditions and both are discretized. The difference form of these equations presents a tridiagonal matrix problem which is solved in a standard manner.

We next will discretize the equation describing the fluid (6). An odd-even cyclic reduction technique used to solve its discretized form will then be described. Finally, the capacitance matrix technique used to handle the mixed boundary value problem on the outer fluid boundary will be discussed.

BASIC STRATEGY

The basic strategy of the calculational method is to solve the finite difference representations of the shell equations of motion and fluid equation separately but account for the interaction between the two by using the adhesion boundary conditons (9) at the shell-fluid interface. The shell displacements as a function of time for each Fourier mode are determined separately and must be summed to get the total displacement. The forcing function, whether it is applied at the outer boundary of the fluid or on the shell must be expanded in a Fourier series with the appropriate Fourier term applied for each mode calculated. Alternatively, the natural frequencies for each mode can be calculated by inputting a step forcing function of short rise time or a harmonic forcing function and varying its frequency.

Figure B-1 is a flow chart of the computational process for an individual Fourier mode. If the forcing function is specified as a pressure on the outer boundary of the fluid then the calculation is started by solving the fluid equations to determine the pressure distribution in the fluid and at the fluid-shell interface. This interface pressure is then input to the shell equations as a radial load from which the displacement and acceleration of the shell are calculated. The radial acceleration of the shell is then used to specify a boundary condition at the fluid-shell interface and new pressure distributions in the fluid and on the shell surface are determined from the fluid equations. The average pressure between the new and old time steps is then used as a loading input to the shell equations to determine the shell displacement and acceleration at the next time step. This process is repeated until completion of the problem. The use of the average pressure gave the best convergence compared to other weighting criteria.

SHELL EQUATIONS

The technique used to solve the shell equations of motion is similiar to that used by Johnson and Greif [B-1]. We start by casting equations (2) into a single matrix equation with dependent variable z, a four component column vector. Although we are talking about the nth mode, we will drop the subscript n for the sake of clarity.

$$Kz'' + Fz' + Gz = y + D\ddot{z} + L\dot{z} \tag{10}$$

where

$$z = \begin{bmatrix} u \\ v \\ w \\ M_\xi \end{bmatrix} \qquad y = \begin{bmatrix} 0 \\ 0 \\ q \\ 0 \end{bmatrix} \qquad D = \begin{bmatrix} 1 & 0 & 0 & 0 \\ 0 & 1 & 0 & 0 \\ 0 & 0 & 1 & 0 \\ 0 & 0 & 0 & 0 \end{bmatrix}$$

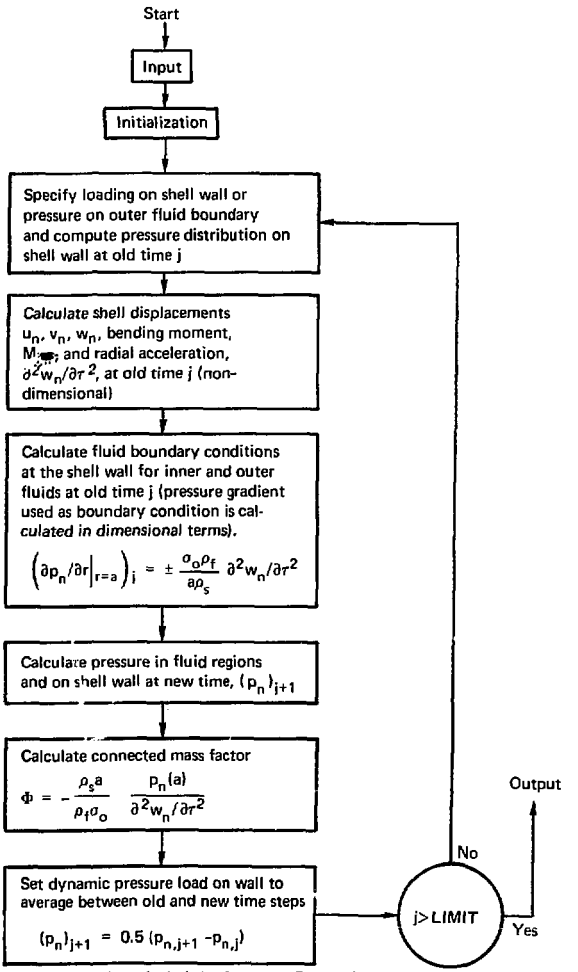

Fig. B-1 Flow chart of calculation for the nth Fourier Mode using the code SHELVIB.

$$K = \begin{bmatrix} \alpha_1 & 0 & 0 & 0 \\ 0 & \alpha_6 & \alpha_8 & 0 \\ 0 & \alpha_{12} & \alpha_{14} & \alpha_{16} \\ 0 & 0 & \alpha_{19} & 0 \end{bmatrix} \qquad F = \begin{bmatrix} 0 & \alpha_3 & \alpha_4 & 0 \\ \alpha_5 & 0 & 0 & 0 \\ \alpha_{11} & 0 & 0 & 0 \\ 0 & 0 & 0 & 0 \end{bmatrix} \tag{B-1}$$

$$G = \begin{bmatrix} \alpha_2 & 0 & 0 & 0 \\ 0 & \alpha_7 & \alpha_9 & \alpha_{10} \\ 0 & \alpha_{13} & \alpha_{15} & \alpha_{17} \\ 0 & \alpha_{18} & \alpha_{20} & \alpha_{21} \end{bmatrix} \qquad L = \begin{bmatrix} C & 0 & 0 & 0 \\ 0 & C & 0 & 0 \\ 0 & 0 & C & 0 \\ 0 & 0 & 0 & 0 \end{bmatrix}$$

The coefficients from equations (2), α_1 through α_{21}, are listed in Table A-1. C is a dimensionless damping coefficient. As before, primes stand for derivatives with respect to ξ, the axial space variable and dots, for derivatives with respect to τ, the dimensionless time variable.

We now wish to cast the end condition into a non-dimensional matrix form in terms of vector z. First the variables describing the natural boundary conditions must be expanded in a Fourier series. Then relationships between the Fourier coefficients of these variables and the components of z must be established. This was done in Appendix A giving

$$N_\xi = \beta_1 u' + \beta_2 v + \beta_3 w \tag{A-21a}$$

$$\hat{N}_{\xi\theta} = \beta_4 u + \beta_5 v' + \beta_6 w' \tag{A-21b}$$

$$\hat{Q}_\xi = \beta_7 u + \beta_8 v' + \beta_9 w' + \beta_{10} M'_\xi \tag{A-21c}$$

$$\Theta_\xi = - w' \tag{A-18f}$$

Again the n subscript has been dropped for clarity. The values for β_1 through β_{10} are listed in Table A-2.

Note that the end conditions can be written in the form:

$$\hat{\Omega}\,\overline{x} + \Lambda\, z = \ell \tag{B-2}$$

with $\hat{\Omega}$, Λ diagonal matrices and ℓ a column vector dictated by the actual end conditions. We can also write (A-21) in a matrix form as

$$\bar{x} = Hz' + Jz$$

$$H = \begin{bmatrix} \beta & 0 & 0 & 0 \\ 0 & \beta_5 & \beta_6 & 0 \\ 0 & \beta_8 & \beta_9 & \beta_{10} \\ 0 & 0 & -1 & 0 \end{bmatrix} \qquad J = \begin{bmatrix} 0 & \beta_2 & \beta_3 & 0 \\ \beta_4 & 0 & 0 & 0 \\ \beta_7 & 0 & 0 & 0 \\ 0 & 0 & 0 & 0 \end{bmatrix} \qquad \text{(B-3)}$$

Combining (B-2) and (B-3) we obtain the desired form of the equation describing the end conditions

$$\hat{\Omega} Hz' + (\Lambda + \hat{\Omega} J)z = \ell \qquad \text{(B-4)}$$

or

$$\hat{\Omega} Hz' + (I - \hat{\Omega} + \hat{\Omega} J)z = \ell \qquad (11)$$

with I the identity matrix.

As an example, for a fixed boundary condition $u = v = w = \theta_\xi = 0$. This defines $\hat{\Omega}$, Λ, and ℓ as

$$\hat{\Omega} = \begin{bmatrix} 0 & & & \\ & 0 & & \\ & & 0 & \\ & & & 1 \end{bmatrix} \qquad \Lambda = \begin{bmatrix} 1 & & & \\ & 1 & & \\ & & 1 & \\ & & & 0 \end{bmatrix} \qquad \ell = \begin{bmatrix} 0 \\ 0 \\ 0 \\ 0 \end{bmatrix}.$$

For a simply-supported boundary condition $v = w = M_\xi = N_\xi = 0$ giving

$$\hat{\Omega} = \begin{bmatrix} 1 & & & \\ & 0 & & \\ & & 0 & \\ & & & 0 \end{bmatrix} \qquad \Lambda = \begin{bmatrix} 0 & & & \\ & 0 & & \\ & & 0 & \\ & & & 1 \end{bmatrix} \qquad \ell = \begin{bmatrix} 0 \\ 0 \\ 0 \\ 0 \end{bmatrix}.$$

As a final example, for a free boundary, $N_\xi = \hat{N}_{\xi\theta} = \hat{Q}_\xi = M_\xi = 0$ for which we have

$$\hat{\Omega} = \begin{bmatrix} 1 & & & \\ & 1 & & \\ & & 1 & \\ & & & \underline{0} \end{bmatrix} \qquad \Lambda = \begin{bmatrix} 0 & & & \\ & 0 & & \\ & & 0 & \\ & & & \underline{1} \end{bmatrix} \qquad \ell = \begin{bmatrix} 0 \\ 0 \\ 0 \\ 0 \end{bmatrix}.$$

Differencing Scheme

We now have (10) and (11) describing the shell equations of motion and the end conditions in terms of the Fourier coefficients of the dependent variables, u, v, w, M_ξ. We will formulate the differencing schemes and substitute these into (10) and (11) to produce three algebraic matrix equations which form a tridiagonal system and can be solved by Gaussian elimination techniques.

We start by defining space and time increments as

$$\xi_i = i\Delta \qquad \tau_j = j\varepsilon$$

$$i = 0,1,2,\ldots,N \qquad j = -2,-1,0,1,2\ldots\ldots$$

$$\Delta = s/aN \qquad \varepsilon = \left(\frac{E}{\rho_s}\right)^{1/2} \frac{t_{i,j+1}-t_{i,j}}{a}$$

where the mesh is shown in Figure B-2a.

At positions ξ_i and time τ_j we use for derivatives with respect to ξ,

$$z''_{i,j} = \frac{(z_{i+1,j}-2z_{i,j}+z_{i-1,j})}{\Delta^2} \tag{B-5a}$$

$$(i = 1,2,\ldots,N-1)$$

$$z'_{i,j} = \frac{(z_{i+1,j}-z_{i-1,j})}{2\Delta} \tag{B-5b}$$

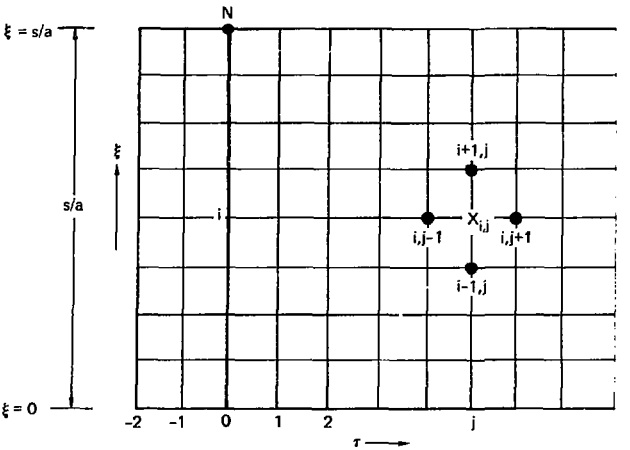

Fig.B-2a Mesh for finite differencing of shell equations (B-10a, b, c).

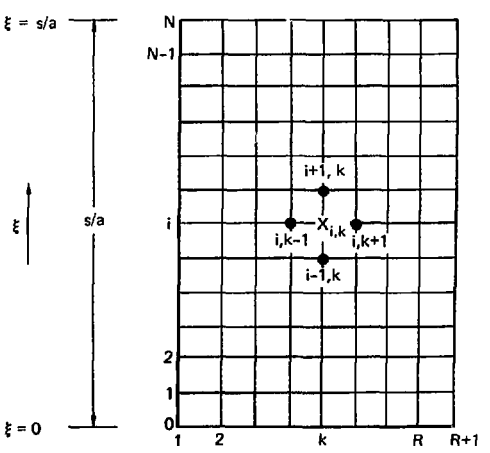

Fig.B-2b Mesh for finite differencing of fluid equation (B-12a).

and for i = 0 and N,

$$z'_{0,j} = \frac{(-3/2z_{0,j}+2z_{1,j}-1/2z_{2,j})}{\Delta} \tag{B-5c}$$

$$z'_{N,j} = \frac{(3/2z_{N,j}-2z_{N-1,j}+1/2z_{N-2,j})}{\Delta} \tag{B-5d}$$

The backward differencing scheme used to represent the derivatives at the shell ends retains the accuracy of the central differencing used at the other space stations without involving the fictitious space stations at -1 and N+1. If we define

$$z(\xi) = a_1 + a_2\xi + a_3\xi^2$$

then we have

$$z_{0,j} = z(0) = a_1$$

$$z_{1,j} = z(\Delta) = a_1 + a_2\Delta + a_3\Delta^2$$

$$z_{2,j} = z(2\Delta) = a_1 + 2a_2\Delta + 4a_3\Delta^2$$

if we solve for a_2 and a_3 we obtain

$$a_1 = \frac{z_{0,j}-2z_{1,j}+z_{2,j}}{2\Delta^2}, \qquad a_2 = \frac{2z_{1,k}-3/2z_{0,j}-1/2z_{2,j}}{\Delta}$$

and since

$$z'(\xi) = \frac{\partial}{\partial\xi}(a_1 + a_2\xi + a_3\xi^2) = a_2 + 2a_3\xi$$

we get

$$z'_{0,j} = z'(0) = a_2 = \frac{(-3/2z_{0,j}+2z_{1,j}-1/2z_{2,j})}{\Delta}$$

Equation (B-5d) can be obtained in a similar manner.

For the time derivatives we use,

$$\ddot{z}_{i,j} = \bar{\alpha}_j z_{i,j} + \bar{\beta}_j z_{i,j-1} + \bar{\gamma}_j z_{i,j-2} + \bar{\delta}_{i,j-3} \qquad \text{(B-6a)}$$

$$(j = 0,1,2,\ldots\ldots)$$

$$\dot{z}_{i,j} = \bar{\kappa}_j z_{i,j} + \bar{\lambda}_j z_{i,j-1} + \bar{\mu}_j z_{i,j-2} + \bar{\nu}_j z_{i,j-3}. \qquad \text{(B-6b)}$$

Since we are interested in the forced vibration problem we are assuming $\dot{z}_{i,0} = \dot{z}_{i,0} = \ddot{z}_{i,0} = 0$ although the method could be extended to include non zero initial conditions. The coefficients for (B-6a,b) are listed in Table B-1.

Equations (B-6a,b) are based on the Houbolt method of numerical integration [B-2] which employes a third degree polynominal in τ fitted through four discrete points τ_j, τ_{j-1}, τ_{j-2}, and τ_{j-3}. This gives an implicit, stable system of equations with the time increment ε chosen to give the desired accuracy. As $\varepsilon \to \infty$ the solution approaches the correct steady state value. However, the solution is damped if ε is greater than 1/50 the natural period of the system. Also, this technique must be used correctly during the initial stages of the calculation requiring different values for the coefficients when j = 0, 1, 2. These values are given in Table B-1.

To get Houbolt's equations we start with

$$z(\tau) = b_1 + b_2\tau + b_3\tau^2 + b_4\tau^3. \qquad \text{(B-7)}$$

Then we evaluate using

$$z_{i,1} = z(\varepsilon) = b_1 + b_2\varepsilon + b_3\varepsilon^2 + b_4\varepsilon^3$$

$$z_{i,0} = z(0) = b_1$$

$$z_{i,-1} = z(-\varepsilon) = b_1 - b_2\varepsilon + b_3\varepsilon^2 - b_4\varepsilon^2$$

$$z_{i,-2} = z(-2\varepsilon) = b_1 - 2b_2\varepsilon + 4b_3\varepsilon^2 - 8b_4\varepsilon^3 .$$

Solving for b_2 and b_3 in terms of $z_{i,1}$, $z_{i,0}$, $z_{i,-1}$, $z_{i,-2}$, gives

$$b_2 = \frac{1}{6\varepsilon}\left(2z_{i,1} + 3z_{i,0} - 6z_{i,-1} + z_{i,-2}\right)$$

$$b_3 = \frac{z_{i,1} - 2z_{i,0} + z_{i,-1}}{2\varepsilon^2}$$

Now we note that

$$\dot{z}(\tau) = b_2 + 2b_3\tau + 3b_4\tau^2$$

$$\ddot{z}(\ ) = 2b_3 + 6b_4\tau$$

and so we have

$$\dot{z}_{i,0} = \dot{z}(0) = b_2 = \frac{1}{6\varepsilon}\left(2z_{i,1} + 3z_{i,0} - 6z_{i,-1} + z_{i,-2}\right)$$

$$\ddot{z}_{i,0} = \ddot{z}(0) = 2b_3 = \frac{z_{i,1} - 2z_{i,0} + z_{i,-1}}{\varepsilon^2}$$

If we now use the initial conditions that $z_{i,0} = \dot{z}_{i,0} = \ddot{z}_{i,0} = 0$ we find that

$$z_{i,1} = -z_{i,-1} \quad \text{and} \quad z_{i,-2} = -8z_{i,1}. \tag{B-8a,b}$$

Next if we solve for b_2 and b_3 of (B-7) in terms of $z_{i,j}$, $z_{i,j-1}$, $z_{i,j-2}$, $z_{i,j-3}$ we get the standard form of the Houbolt equations

$$\dot{z}_{i,j} = \frac{1}{6\varepsilon}\left(11z_{i,j} - 18z_{i,j-1} + 9z_{i,j-2} \quad 2z_{i,j-3}\right) \tag{B-9a}$$

$$\ddot{z}_{i,j} = \frac{1}{\varepsilon^2}\left(2z_{i,j} - 5z_{i,j-1} + 4z_{i,j-2} - z_{i,j-3}\right) \tag{B-9b}$$

Substituting (B-8a,b) into (B-9a,b) gives formulas for the first two time increments (j=1,2) of the calculation in terms of $\ddot{z}_{i,1}$, $\dot{z}_{i,1}$, $z_{i,1}$, $\ddot{z}_{i,2}$, $\dot{z}_{i,2}$, $z_{i,2}$.

$$\dot{z}_{i,1} = \frac{3z_{i,1}}{\varepsilon} \qquad \ddot{z}_{i,1} = \frac{6z_{i,1}}{\varepsilon^2} \qquad \text{(B-9c,d)}$$

$$\dot{z}_{i,2} = \frac{1}{6\varepsilon}\,(11z_{i,2} - 16z_{i,1}) \qquad \ddot{z}_{i,2} = \frac{1}{\varepsilon^2}\,(2z_{i,2} - 4z_{i,1}) \qquad \text{(B-9e,f)}$$

From (B-9a,...,f) the coefficients for (B-6a,b) shown in Table B-1 are obtained.

If we now substitute (B-5, B-6) into (10) and (11) we get three matrix equations in terms of three unknowns, $z_{i+1,j}$, $z_{i,j}$, and $z_{i-1,j}$.

$$\mathcal{Q}_{0,j}\, z_{2,j} + A_{0,j}\, z_{1,j} + \mathcal{B}_{0,j}\, z_{0,j} = E_{0,j} \qquad (i=0) \qquad \text{(B-10a)}$$

$$Az_{i+1,j} + B_j z_{i,j} + Cz_{i-1,j} = E_{i,j} \qquad (i=1,2,\ldots,N-1) \qquad \text{(B-10b)}$$

$$\mathcal{B}_{N,j}\, z_{N,j} + C_{N,j}\, z_{N-1,j} + \mathcal{Q}_{N,j}\, z_{N-2,j} = E_{N,j} \qquad (i=N) \qquad \text{(B-10c)}$$

with

$$A = \frac{2K}{\Delta} + F \qquad A_{0,j} = \frac{2\hat{\Omega}_{0,j}H}{\Delta}$$

$$B_j = -\frac{4K}{\Delta} + 2\Delta\,[G - (\mathcal{D}\bar{\alpha}_j + L\bar{\kappa}_j)]$$

$$\mathcal{B}_{0,j} = -\frac{3\hat{\Omega}_{0,j}H}{2\Delta} + I - \hat{\Omega}_{0,j} + \hat{\Omega}_{0,j}J$$

$$\mathcal{B}_{N,j} = \frac{3\hat{\Omega}_{N,j}H}{2\Delta} + I - \hat{\Omega}_{N,j} + \hat{\Omega}_{N,j}J$$

$$C = \frac{2K}{\Delta} - F \qquad C_{N,j} = -\frac{2\hat{\Omega}_{N,j}H}{\Delta}$$

$$E_{i,j} = 2\Delta y_{i,j} + 2\Delta[(\mathcal{D}\bar{\beta}_j + L\bar{\lambda}_j)\, z_{i,j-1} + (\mathcal{D}\bar{\gamma}_j + L\bar{\mu}_j)\, z_{i,j-2} + (\mathcal{D}\bar{\delta}_j + L\bar{\nu}_j)\, z_{i,j-3}]$$

$$E_{0,j} = \ell_{0,j} \qquad E_{N,j} = \ell_{N,j}$$

$$Q_{0,j} = -\frac{\hat{\Omega}_{0,j}H}{2\Delta} \qquad Q_{N,j} = \frac{\hat{\Omega}_{N,j}H}{2\Delta}$$

TABLE B-1

Formula's for the Coefficients of the Differenced Form of the Time Derivatives, Equation (B-6a,b)

$$\bar{\alpha}_0 = \bar{\beta}_0 = \bar{\gamma}_0 = \bar{\delta}_0 = 0$$

$$\bar{\alpha}_1 = \frac{6}{\varepsilon^2}, \ \bar{\beta}_1 = \bar{\gamma}_1 = \bar{\delta}_1 = 0$$

$$\bar{\alpha}_2 = \frac{2}{\varepsilon^2}, \ \bar{\beta}_2 = -\frac{4}{\varepsilon^2}, \ \bar{\gamma}_2 = \bar{\delta}_2 = 0$$

$$\bar{\alpha}_j = \frac{2}{\varepsilon^2}, \ \bar{\beta}_j = -\frac{5}{\varepsilon^2}, \ \bar{\gamma}_j = \frac{4}{\varepsilon^2}, \ \bar{\delta}_j = -\frac{1}{\varepsilon^2}$$

(j=3,4,.....)

$$\bar{\kappa}_0 = \bar{\lambda}_0 = \bar{\mu}_0 = \bar{\nu}_0 = 0$$

$$\bar{\kappa}_1 = \frac{3}{\varepsilon}, \ \bar{\lambda}_1 = \bar{\mu}_1 = \bar{\nu}_1 = 0$$

$$\bar{\kappa}_2 = \frac{11}{6\varepsilon}, \ \bar{\lambda}_2 = -\frac{8}{3\varepsilon}, \ \bar{\mu}_2 = \bar{\nu}_2 = 0$$

$$\bar{\kappa}_j = \frac{11}{6\varepsilon}, \ \bar{\lambda}_j = -\frac{3}{\varepsilon}, \ \bar{\mu}_j = \frac{3}{2\varepsilon}, \ \bar{\nu}_j = -\frac{1}{3\varepsilon}$$

(j=3,4,.....)

Solution Method

To solve equations (B-10a,b,c) at any time j, a Gaussian elimination technique is used. First a recurrence relation is formed relating $z_{i,j}$ and $z_{i-1,j}$. Then using the boundary condition at i = N equation (B-10c) together with this recursion formula is used to calculate $z_{N-1,j}$, etc., down to $z_{0,j}$.

Assume as the recurrence relation

$$z_{i,j} = - P_{i,j} z_{i+1,j} + x_{i,j}. \qquad \text{(B-11a)}$$

$$(i=1,2,3,\ldots\ldots,N-1)$$

Then from equations (B-10a) and (B-10b) we get

$$P_{1,j} = [B_{0,j} C^{-1} B_j - A_{0,j}]^{-1} [B_{0,j} C^{-1} A - Q_{0,j}]$$

$$x_{1,j} = [B_{0,j} C^{-1} B_j - A_{0,j}]^{-1} [B_{0,j} C^{-1} E_{1,j} - E_{0,j}] .$$

Now from equation (B-11a) we have

$$z_{i-1,j} = - P_{i-1,j} z_{i,j} + x_{i-1,j}$$

and if this is substituted into equation (B-10b) we get

$$P_{i,j} = [B_j - CP_{i-1,j}]^{-1}A \qquad (i=2,3,\ldots,N-1)$$

$$x_{i,j} = [B_j - CP_{i-1,j}]^{-1} [E_{i,j} - Cx_{i-1,j}] .$$

If we use equation (B-11a) for $z_{N-1,j}$ and $z_{N-2,j}$ we get the desired equation for $z_{N,j}$.

$$z_{N,j} = - [B_{N,j} - C_{N,j} P_{N-1,j} + Q_{N,j} P_{N-2,j} P_{N-1,j}]^{-1}$$

$$\cdot[C_{N,j} x_{N-1,j} - Q_{N,j} P_{N-2,j} x_{N-1,j} + Q_{N,j} x_{N-2,j} - E_{N,j}] \qquad \text{(B-11b)}$$

We then calculate down from $z_{N,j}$ to get all $z_{i,j}$ until we end with

$$z_{0,j} = C^{-1} [E_{1,j} - Az_{2,j} - B_j z_{1,j}] . \qquad \text{(B-11c)}$$

The solution for the z's involves only inversions of 4 x 4 matrices. It should be noted that if the boundary conditions at the end i = 0 and equation (B-10a) are used to calculate $z_{0,j}$ instead of equation (B-11c) difficulty may arise since the matrix $B_{0,j}$ may be singular.

FLUID EQUATION

The equation used to represent the nth circumferential mode of the fluid is (6). This equation is elliptic in ξ, η cylindrical coordinates and is used to represent the fluid both inside and outside the shell. The outer fluid region represents a special problem since we want to be able to specify mixed boundary values on its outer boundary. In this way we can model a rigid outer wall over most of the boundary ($\partial p/\partial \eta = 0$) and simulate a pump inlet port over a small portion ($p = p(\tau)$) if we wish.

A fast, direct solution method [B-3] was employed to handle the fluid equations with suitable modification to handle the mixed boundary values. This direct method takes advantage of the block structure of the finite difference form of (6) and employes an odd-even cyclic reduction technique to directly solve the equation. Equation (6) written in a slightly different form becomes

$$\frac{1}{r}\frac{\partial}{\partial r}\left(r\frac{\partial p_n}{\partial r}\right) + \frac{\partial^2 p_n}{\partial \xi^2} - \frac{n^2}{r^2}p_n = 0 . \tag{6}$$

Differencing Scheme

The dimensionless finite difference form of (6) employes centered difference approximations to the derivatives at a grid of points (ξ_i, r_k) as shown in Fig. B-2b.

$$\xi_i = i\Delta \qquad r_k = r_1 + \frac{(k-1)}{R}(r_{R+1} - r_1)$$

$$i = 0,1,2,\ldots,N \qquad k = 1,2,\ldots,R+1$$

$$\Delta = s/aN$$

$$\frac{R^2}{(r_{R+1}-r_1)^2}\left[\left(r_k + \frac{(r_{R+1}-r_1)}{2R}\right)(p_{i,k+1} - p_{i,k}) - \left(r_k - \frac{(r_{R+1}-r_1)}{2R}\right)\right.$$

$$\left.\cdot(p_{i,k} - p_{i,k-1})\right] + \frac{1}{\Delta^2}\left[p_{i-1,k} - 2p_{i,k} + p_{i+1,k}\right] \tag{B-12a}$$

$$- \frac{n^2}{r_k}p_{i,k} = 0$$

For the fluid inside the shell we have $\frac{\partial p}{\partial r}\Big]_{i,r_0/a} = 0$ on the inner boundary and $\frac{\partial p}{\partial r}\Big]_{i,1} = \frac{a}{h}\frac{\rho_f}{\rho_s}\ddot{w}$ on the outer boundary as per (A-32a). Since along the shell wall the solution $p_{i,R+1}$ is unknown and only the derivative is defined at the outer boundary, we must substitute the central difference approximation

$$p_{i,R+2} = p_{i,R} + 2\frac{r_{R+1}-r_1}{R}\frac{a}{h}\frac{\rho_f}{\rho_s}\ddot{w}$$

into (B-12a) to obtain

$$\frac{2R^2}{(r_{R+1}-r_1)^2}\, p_{i,R} - \frac{2R^2}{(r_{R+1}-r_1)^2}\, p_{i,R+1} + \frac{1}{\Delta^2}\left[p_{i-1,R+1} - 2p_{i,R+1} + p_{i+1,R+1}\right]$$

$$- \frac{n^2}{r^2_{R+1}}\, p_{i,R+1} = - \frac{(2R+1)r_{R+1}-r_1}{(r_{R+1}-r_1)r_{R+1}}\, \frac{a}{h}\, \frac{\rho_f}{\rho_s}\, \ddot{w} \tag{B-12b}$$

as a representation of (B-12a) on the boundary r_{R+1}. In this way we do not have to use the fictitious points (ξ_i, r_{R+2}). A similar technique is used to arrive at an equation representing the boundary points (ξ_i, r_1) without involving the fictitious points (ξ_i, r_0).

$$\frac{2R^2}{(r_{R+1}-r_1)^2}\, p_{i,2} - \frac{2R^2}{(r_{R+1}-r_1)^2}\, p_{i,1} + \frac{1}{\Delta^2}\left[p_{i-1,1} - 2p_{i,1} + p_{i+1,1}\right]$$

$$- \frac{n^2}{r_1^2}\, p_{i,1} = \frac{(2R+1)r_1-r_{R+1}}{(r_{R+1}-r_1)r_1}\, \frac{a}{h}\, \frac{\rho_f}{\rho_s}\, \ddot{w} \tag{B-12c}$$

For the fluid outside the shell the no-slip boundary condition is applied at the inner boundary as per (A-32b). The equation developed for the points on the shell wall is similiar to (B-12c). The treatment of the outer boundary involves mixed boundary values and will be described later.

Both Dirichlet, $p(0,r) = 0, p(s/a,r) = 0$ or Neumann boundary conditions, $\frac{\partial p(0,r)}{\partial \xi} = \frac{\partial p(s/a,r)}{\partial \xi} = 0$ can be specified on the ends of both fluid regions. The boundary points for the Neumann condition are handled in a manner so that values at the $i = -1, N + 1$ points need not be specified. This is done in a manner similar to what we did for the radial boundaries.

Dirichlet boundary conditions were used for all calculations in this report. It was interesting to note that both the analytical solution, which was for an infinitely long region, and the experimental results approached the computer code solution with Dirichlet boundary conditions on both ends of the fluid regions.

Solution Method

The solution method for solving (B-12) was developed by Swarztrauber and Sweet [B-3] and is a direct, non-iterative method which can be used on the general class of elliptic partial differential equations in two dimensional geometry. The solution or the derivative of the solution can be specified at either radial boundary and at either end. Also a periodic boundary condition, i.e. $p_{0,n} = p_{N,n}$, can be applied on the ends. We have modified Swarztrauber's and Sweet's solution method to allow for specification of the solution and the derivative of the solution together on the outer radial boundary by use of a capacitance matrix technique [B-4].

The direct solution method for (B-12) takes advantage of the block structure of this set of finite difference equations. We first put them in the form

$$a_k p_{i,k-1} + b_k p_{i,k} + c_k p_{i,k+1} + p_{i-1,k} - 2p_{i,k} + p_{i+1,k} = 0 \qquad \text{(B-13)}$$

and this system is solved by the Buneman [B-5] variant of cyclic reduction. This involves constructing a R x R matrix from the a_k, b_k, c_k, coefficients and employing this matrix, which is block tri-diagonal, to reduce the number of variables by two, in steps, until a single equation is left. This equation is

then solved and its solution used to obtain solutions for all the other unknowns. For this system to work s must be subdivided into N increments such that $N = 2^{\tilde{p}} 3^{\tilde{q}} 5^{\tilde{r}}$ where $\tilde{p}$, $\tilde{q}$, $\tilde{r}$ are non-negative integers.

Dorr [B-6] has shown that this direct method of solution is significantly faster than the usual iterative techniques, for which, in addition, an appropriate acceleration factor must be determined.

The above method of solution works when one type of boundary valve is allowed per boundary. For the case with mixed boundary values this method was modified using a capacitance matrix technique similar to that described by Buzbee [B-4].

The capacitance matrix technique involves a modification of rows such that the cyclic reduction process can still be used on the modified system.

For an elliptic difference system described by the matrix equation

$$\hat{A}p = \hat{\delta} \tag{B-14}$$

we define a modified matrix $\hat{B}$ with

$$\hat{B}p = \hat{t} \tag{B-15}$$

which can be solved using the cyclic reduction method. To determine $\hat{t}$ we need to know certain elements of $(\hat{A}\hat{B}^{-1})$. Since these elements are independent of $\hat{\delta}$ this computation can be done in a preprocessing phase. Using the results of preprocessing, the solution of (B-14) can be done efficiently.

We start by defining:

$\overline{R} = \{1,2,\ldots\ldots,N\}$

$\overline{S} = \overline{q}$ element subset of $\overline{R}$ over which p instead of $\partial p/\partial \tau$ is specified and solve for

$$g_i = \hat{B}^{-1} e_i \qquad i \varepsilon \overline{S} \tag{B-16}$$

over subset $\bar{S}$ where $\hat{B}$ is the matrix coefficient for equation (B-13) with Neumann boundary conditions in both radial directions and $e_i = 1.0$. Here e_i denotes the ith column of the N by N identity matrix. We now define the unknown for which a solution is desired as

$$p = \hat{p} + \sum_{\bar{S}} \beta_i g_i$$

where the β_i are yet to be found. For all rows k outside of $\bar{S}$ we can determine p for the $(N-\bar{q})$ unmodified equation of (B-14) since

$$(\hat{A}p)_k = (\hat{B}p)_k = \hat{s}_K.$$

The remaining $\bar{q}$ equations are satisfied by picking the β_i properly.

$$(\hat{A}p)_i = \hat{s}_i = (\hat{A}\hat{p})_i + \sum_S \beta_j (\hat{A}g_j)_i$$

and with

$$\hat{C} \equiv (\hat{A}g_j)_i \qquad\qquad \gamma \equiv \hat{s}_i - (\hat{A}\hat{p})_i$$

we obtain the β_i from the matrix equation

$$\beta = \hat{C}^{-1}\gamma. \tag{B-17}$$

This is called the capacitance system and $\hat{C}$ the capacitance matrix.

REFERENCES FOR APPENDIX B

B-1. Johnson, D. and Greif, R., "Dynamic Response of a Cylindrical Shell: Two Numerical Methods," AIAA Journal, Vol. 4, No. 3, (1966), pp 486-494.

B-2. Houbolt, J. C., "A Recurrent Matrix Solution for the Dynamic Response of Elastic Aircraft," J. of the Aeronautic Sciences, (Sept. 1950).

B-3. Swarztrauber, P. and Sweet, R., "Efficient Fortran Subprogram for the Solution of Elliptic Partial Differential Equations" NCAR-TN-IA-109. Nat'l Center for Atmospheric Research, Boulder, Colorado (July, 1975).

B-4. Buzbee, B. L., "A Capacitance Matrix Technique", Sparse Matrix Computations Ed. J. R. Bunch & D. J. Rose, Academic Press, (1976).

B-5. Buneman, O., "A Compact Non-iterative Poisson Solver," Rep. 294, Stanford University Institute for Plasma Research, Stanford, Calif. (1969).

B-6. Dorr, F. W., "The Direct Solution of the Discrete Poisson Equation on a Rectangle," SIAM Review, Vol. 12, No. 2, (April 1970).

APPENDIX C - DESCRIPTION OF EXPERIMENT

To check the validity of the assumptions used in formulating the computer code SHELVIB it appeared desirable to check the code against experimental data. For this purpose a thin walled, circular, cylindrical, steel shell was fabricated and instrumented with dynamic pressure transducers and miniature accelerometers. This shell was placed in a larger, thick walled pipe, called the canister, filled with liquid. The shell was clamped at its top end to the canister. A system was designed to introduce a variable, but single frequency sinusoidal pressure wave onto the shell through ports in the canister. In this way the natural frequencies, damping coefficients, and radial displacements of the shell could be determined and compared to those computed by SHELVIB. The sizing of the shell and canister was such as to approximate a 1/12 scale model of the core barrel of a pressurized water reactor.

DESCRIPTION OF APPARATUS

The layout of the experimental apparatus is shown in Fig. C-1 and C-2. The canister is bolted to a support base which is part of an electromagnetic exciter (max. rating 60 g, 2000 Hz, 22kN). The exciter drives a piston in a 63.5 mm (2.5 in.) hydraulic cylinder also resting on the base. Pressure waves generated by the piston travel up the piping and into either one or both of the inlet ports in the canister. If one port is not in use it is blanked off with blind flanges. Pulse amplitude can be varied up to $\pm$ 140 kPa (20 psi) at frequencies up to 1000 Hz.

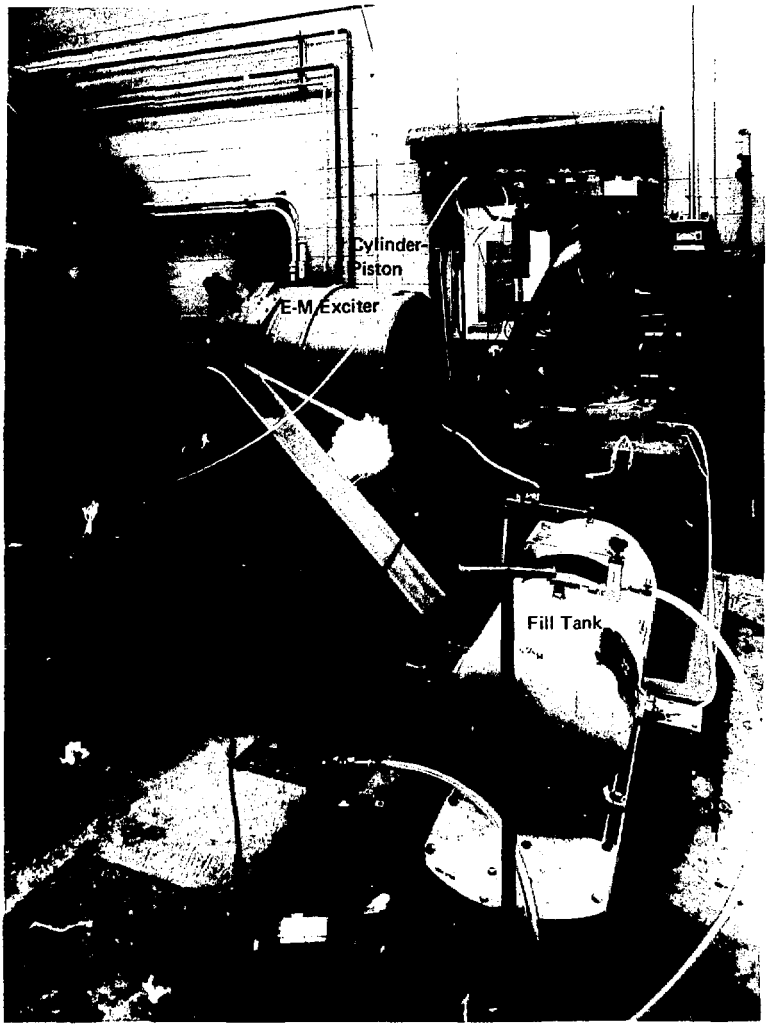

Fig. C-1. Photograph of experimental systems.

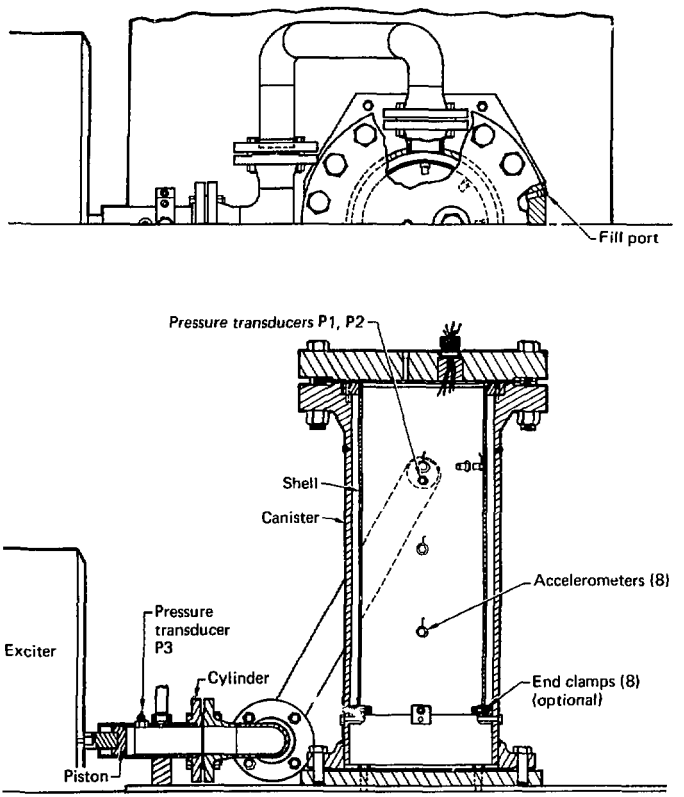

Fig. C-2a Canister-shell layout.

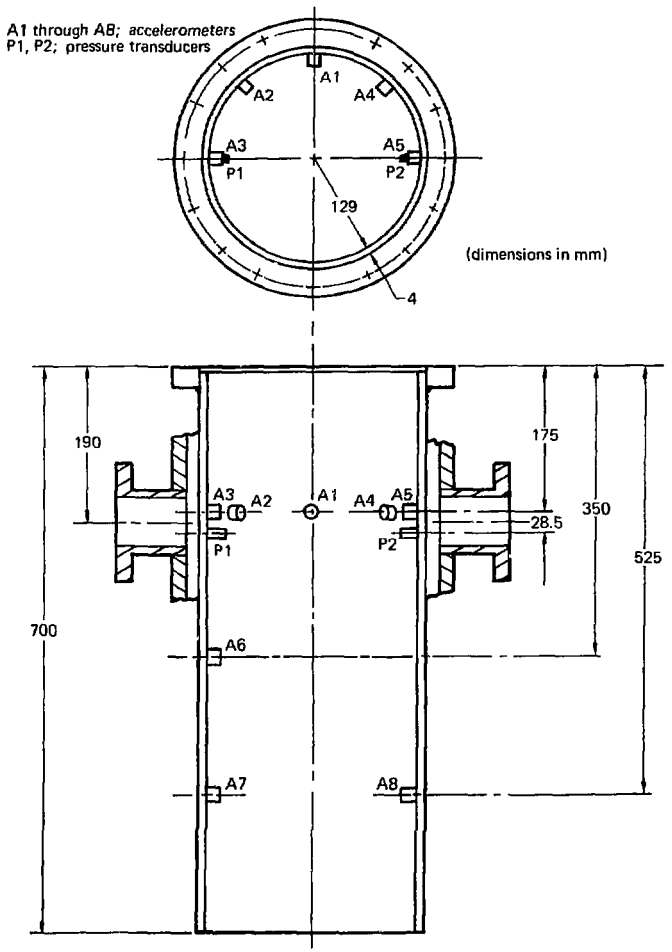

Fig. C-2b Instrumented shell

The pressure pulses impinge on the instrumented cylindrical shell inside the canister. The shell is shown in Fig. C-2b. It is held in a clamped condition at the top with sufficient cap screws to approximate a fixed boundary condition and can either be clamped or free at the bottom. Clamping at the bottom is accomplished by means of eight clamps with thumb screws. Since compressibility effects must be minimized to verify the computer code SHELVIB the test vessel is designed to be evacuated before filling with air-free fluid so that the acoustic velocity will be high enough to meet the criteria expressed in equations (7) and (8). The canister wall is thick enough so as to approximate a rigid wall, thus conforming to the boundary conditions which can be simulated in SHELVIB and also maintaining the effective bulk modulus of the water. The important dimensions of the test apparatus are listed in Table C-1.

INSTRUMENTATION AND DATA REDUCTION

Instrumentation consists of eight accelerometers and four pressure transducers. These are read out directly either on a computer-based, transportable, date acquisition and control system (TDAC) [C-1] or a galvanometer strip chart recorder. The TDAC system can convert analog signals to digital data for storage, output, or processing. A 16-bit central processor, programmable in FORTRAN, can manipulate the data, e.g. subtract background, integrate acceleration data to get displacement, convert from the time domain to the frequency domain, and manipulate data in the frequency domain. This can all be done on line while data is being collected or at a later date from magnetic tape records. Output can be in the form of plots, printout, or records on magnetic tapes.

Table C-1 - Dimensions of Experimental Apparatus

Shell		
	mean radius, a	131 mm (5.17 in.)
	wall thickness, h	4 mm (0.156 in.)
	length, s	700 mm (27.50 in.)
	flange radius	170 mm (6.63 in.)
	flange thickness	24 mm (0.938 in.)
	material	stainless steel (Type 304)
	density, ρ_s	7830 kg/m^3 (0.283 lb/in^3)
	E	$2.00 \times 10^{-11} N/m^2$ (29.0×10^6psi)
	υ	0.295
Canister		
	inside radius, b	150 mm (5.94 in.)
	wall thickness	11 mm (0.44 in.)
	gap, b-(a + h/2)	17.5 mm (0.69 in.)
	inside length	815 mm (32.13 in.)
	volume	0.055m^3 (3350 in^3)
	port, dia.	63 mm (2.47 in.)
	port, orientation	2 - 180° apart

A piezoresistive, strain gage accelerometer is used because of its high sensitivity (10 mV/g) and small size (28 gms). Specifications for the accelerometer are shown in Table C-2. It has a range of ± 25 g and responds within ± 5% over a band width of 0-750 Hz. Shell accelerations are in the range of 0.5 g to 25 g for pressure pulses up to ± 140 kPa. The accelerometers are mounted on the inside of the shell, as shown in Fig. C-2b to sense radial acceleration exclusively. They are secured to the shell by means of threaded studs. Flats were machined on the inside surface of the shell to assure a secure mounting.

A quartz, low impedance, pressure transducer is used to sense pressure. It operates over a pressure range of 550 kPa (80 psi) and has a bandwidth of 20 kHz. Its active face is mounted flush to the outside diameter of the shell through a threaded hole from inside the shell. Further specifications are listed in Table C-2.

It was necessary to operate the instrumentation immersed in the test fluid. A certain amount of difficulty was experienced when water was used because of leakage into the cable connector at the accelerometer housing. The accelerometers and pressure transducers are hermetically sealed units and the cable connectors were sealed on the outside with a silastic compound. Water leakage through the cable bundle sheath traveled down inside the bundle causing shorting between the connector pins over a period of time. However, sufficient data was gathered before the signal became unusable. Leakage was not a problem when insulating transformer oil was used as the test fluid.

Table C-2 - Instrumentation Specifications

Accelerometer	
rated range	±25 g
sensitivity	10 mV/g
natural frequency	2500 Hz
frequency response	±5%, 0 to 750 Hz
damping ratio	0.7 nominal
transverse sensitivity	3% maximum
linearity and hysteresis	±1% of reading, maximum, to ±25g
excitation	10 Vdc
zero output	±25 mV maximum at 10V
model	Endevco Model 2262C-25
diameter	15.5 mm (0.610 in.)
length	25.4 mm (1.00 in.)
weight	28 gms.
Pressure Transducer	
rated range	550 kPa (80 psi)
resolution	5 Pa (.0008 psi rms)
sensitivity	100 mV/psi
linearity	±1% full scale
resonant frequency	130 kHz
vibration sensitivity	.005 psi/g
frequency response	±5%, 0.05 to 20,000 Hz
model	Kistler Model 206
diameter	11 mm (0.436 in.)
length	33 mm (1.30 in.)
weight	22 gms

MEASUREMENT TECHNIQUES

Natural Frequencies and Mode Shapes

The natural frequencies and mode shapes of the instrumented shell were determined using an impact technique and also by sweeping the frequency spectrum using a harmonic exciting source.

The impact technique required that the shell be struck a sharp blow with an instrumented hammer at 26 different locations as shown in Fig. C-3. The acceleration on accelerometer A 1 was recorded for each blow as was the impulse itself from an accelerometer mounted on the hammer. On TDAC the Fourier transform of the accelerometer signal was divided by the Fourier transform of the impulse to give a transfer function , $H(j\omega)$. The inverse transform, $F\,[H(j\omega)]$, gives the acceleration output to a perfect impulse. The imaginary part of $H(j\omega)$, $Im(j\omega)$, is proportional to the relative amplitude of the point struck. By comparing the imaginary part for each point at a given frequency, the mode shape can be constructed.

Natural frequencies and modes were also identified by introducing a sinusoidal pressure wave through inlet ports in the canister and sweeping the frequency spectrum. Resonances were easily identified by observing the amplitude and phase of the accelerometer responses. The pressure waves were generated by a piston-cylinder arrangement with the piston connected to an electro-magnetic exciter. The waves traveled about 0.75 m to the shell through connecting piping. Peak acceleration of the exciter head of from 1 to 2 g was sufficient to give the pressure amplitudes needed. The accelerometer signals at each shell resonance were recorded using TDAC or strip chart recorders. Plots of these signals were studied to give the phase and amplitude relationship between signals and from this information modes were identified.

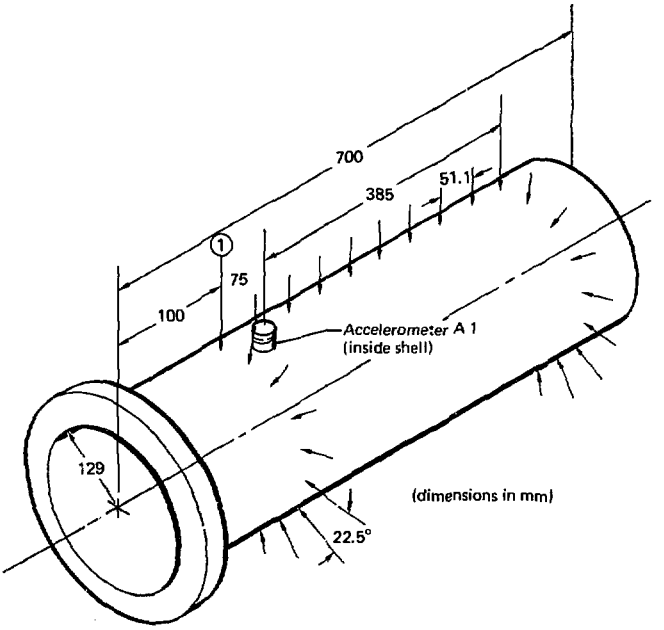

Fig. C-3 Impact technique for finding natural frequencies and modes.

The advantage of the impact technique is that it is quick and only shell resonances are excited. A possible disadvantage is that the top of the canister has to be left open to allow access to the shell. Thus, the fluid remains at atmospheric pressure and with a normal compliment of dissolved gas. Under these conditions the acoustic velocity is very low, e.g. 100 m/sec [C-2], so that the inequalities on which the incompressibility assumption are based (equations (7) and (8)) become marginally applicable. Since the frequencies measured using the impact technique compared to within 10% those measured using harmonic excitation this disadvantage was not a concern here.

The advantage of the harmonic excitation technique is that the system is closed and can be evacuated, filled, and then pressurized to increase the acoustic velocity. This is exactly how these tests were conducted. Referring to Fig. C-1, the air space over the liquid in the fill tank was evacuated, allowing dissolved gases to evolve. The canister was also evacuated. Liquid was then pulled into the canister until it flowed out the top. The top and bottom valves were closed producing a solid, deareated, fluid-shell system. The system was then pressurized through an accumulator to a pressure of several atmospheres. The acoustic velocity in water was calculated from bulk modulus measurements as 600 m/sec using this filling technique. It was noted that there was little difference between the measured natural frequencies with the accumulator valved in or out even though, with the accumulator valve open, the acoustic velocity was substantially less.

The disadvantage of the harmonic excitation technique is that resonances other than the shell resonances are excited. These include the fluid column resonances and resonances in the fluid annular region. These resonances tend to be more pronounced on the pressure transducer signals and by noting phase relationships can be separated from the shell resonances.

Damping Ratios

Damping ratios were measured using the half-power method [C-3]. Using this method the damping is found by measuring the half-power bandwidth of the modal response from the strip chart frequency records and using the relationship

$$\frac{\lambda}{C_c} = \frac{\Delta f}{2f_c} \qquad \text{(C-1)}$$

where λ = damping coefficient

C_c = critical damping coefficient $\equiv 2M_{eff}\Omega$

Δf = bandwidth at the half-power points

f_c = center frequency of the modal response

The half-power bandwidth is the difference in frequency between the half amplitude point before and after the resonance is reached.

Radial Displacements

Radial displacements were computed on TDAC by integrating the radial acceleration twice. Any dc component of the signal was removed after each integration by fitting a linear curve through the data and then subtracting out the linear curve. If necessary the acceleration signal could be mathematically filtered to a selected frequency bandwidth to eliminate

extraneous noise. This was found unnecessary in those cases where the shell's response was a fairly pure sine wave. The integrated displacement matched within 10% that which would be calculated by assuming a harmonic excitation.

$$w(t) = -\frac{\ddot{w}(t)}{\Omega^2 \sin\Omega t} \qquad \text{(C-2)}$$

where

$w(t)$ = radial displacement

$\ddot{w}(t)$ = radial acceleration

Ω = circular frequency

EXPERIMENTAL RESULTS

Natural frequencies were determined in air and under water using the impact technique and under water and oil using the harmonic technique. Properties of the oil used are given in Table C-3.

Table C-3 - Transformer Oil Properties

density - 880 kg/m^3 (0.032 lb/in^3)

kinematic viscosity at 100°F - 12 mm^2/sec (12 centistokes)

dielectric strength, 0.1 in. gap at 25°C - 30 KV

specification - VV - I - 530 Class 2

Results of the frequency measurements are given in Tables C-4A and C-4b for the fixed-free and fixed-fixed end conditions. As can be seen, the natural frequencies measured by the two different techniques closely agree. Note that two natural frequencies are reported for the (3,2) mode in air. This is probably due to the method of boundary constraint used as has been reported by others [C-4].

Table C-4a

Natural Frequencies and Modes for Fixed-Free End Conditions

n	m	Air	Water		Oil
		Impact	Impact	Harmonic	Harmonic
2	1/2	200 Hz	75 Hz		
	3/2	740	315		
3	1/2	440	195	195 Hz	205 Hz
	3/2	620	300		
	5/2	1150	625		
4	1/2	820	420	420	435
	3/2	890	485	470	
	5/2		675	610	
5	1/2	1325	750	755	780
	3/2	1375	815	795	
	5/2		945	890	

Table C-4b

Natural Frequencies and Modes for Fixed-Fixed End Conditions

n	m	Air	Water		Oil
			Impact	Harmonic	Harmonic
2	1	530 Hz	200 Hz		
3	1	550	250	240 Hz	242 Hz
	2	925, 1005	475		
4	1	860	440	435	451
	2	1050	600	555	
	3	1440	860		
5	1	1350	775	765	795
	2	1460	880	835	

The method of determining natural frequencies and modes using the impact technique is illustrated in Figs. C-4 and C-5. Fig. C-4 is a plot of the amplitude of the imaginary part of the transfer function, $|Im(j\omega)|$, for two different end conditions with the shell under water. These particular plots resulted from impacts at location 1 (see Fig. C-3). The peaks on the frequency plots are possible natural frequencies. By viewing a three dimensional plot of $|Im(j\omega)|$ for each point struck at each frequency peak the true natural frequencies are verified when a clear modal profile springs into focus. Pictures of some of these modes are shown in Figs. C-5a,...,h. By counting the number of times the maximum displacement trace (solid line) crosses the shell outline (dotted line) the mode number can be identified.

A harmonic frequency sweep technique was used to verify the natural frequencies in water and also to measure the natural frequencies in oil. Oil, with 90% the density of water, provides another check on the validity of the assumptions used in SHELVIB, the code developed for this research. Transformer oil was used because of its insulating properties.

Typical pressure and acceleration records with the shell immersed in water are shown in Figs. C-6 and C-7. The exciter head peak acceleration was held constant at 9.8 m/s^2 for these runs. In Fig. C-6 the responses, as measured on a strip chart recorder while the source frequency is varied, are shown for fixed-free and fixed-fixed end conditions. The pressure was introduced through one canister port or both ports simultaneously for each type end condition. Many resonances show up on these records and a careful look at the phase and amplitude relationships at each resonance and the phase changes between resonances was required to make positive

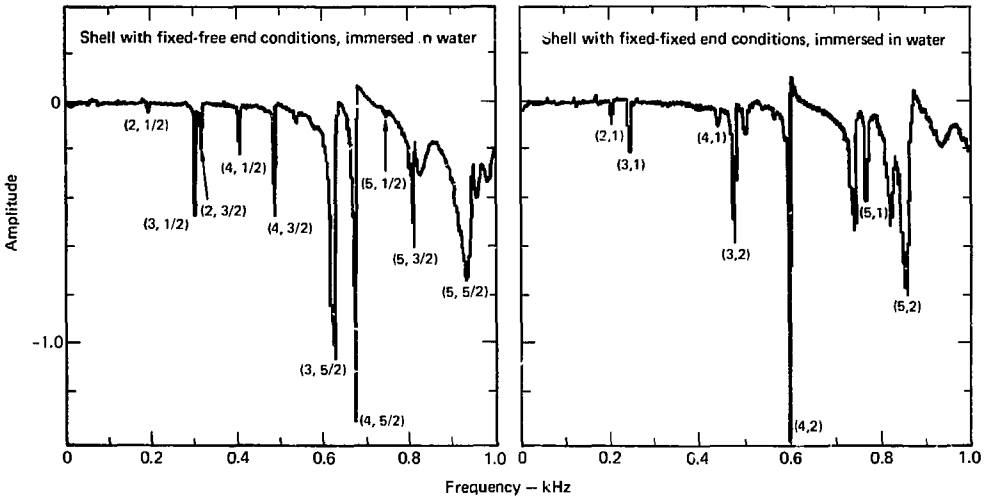

Fig. C-4 Amplitude of the imaginary part of the transfer function.

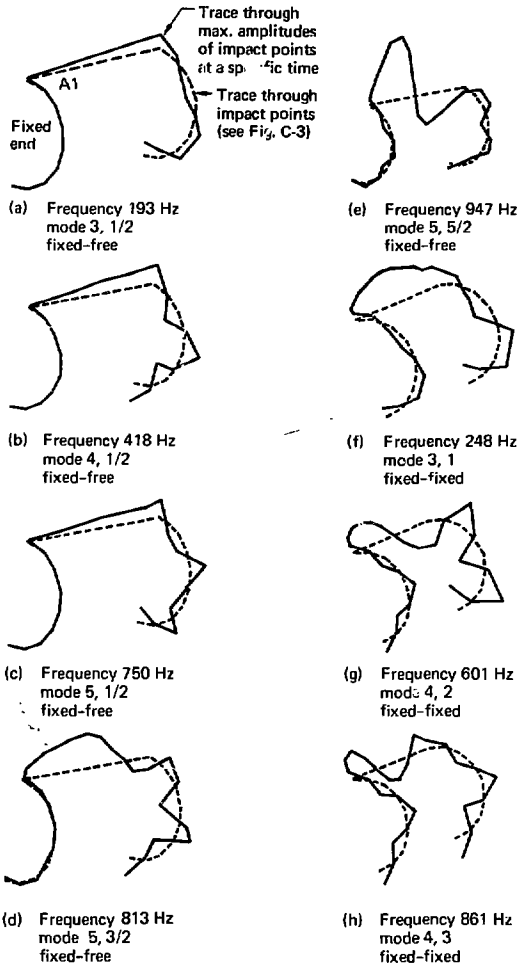

Fig. C-5 Shell modes when immersed in water determined from impact technique. Shell was hit at 26 locations along dotted line and response recorded by accelerometer A1. From these measurements the relative amplitude at each impact point for each mode was determined.

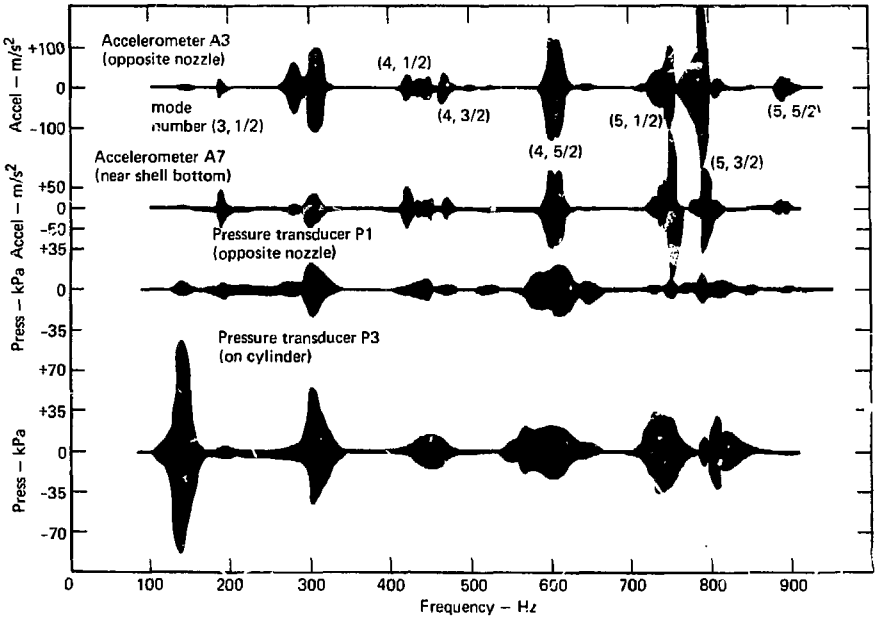

Fig. C-6a Shell response vs. excitation frequency; one nozzle open, shell with fixed-free end conditions, immersed in water.

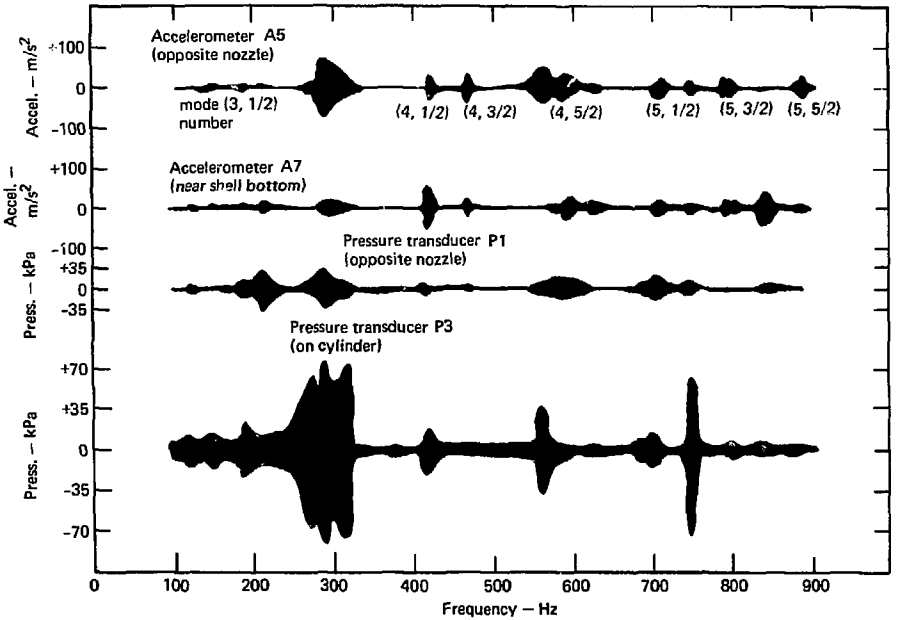

Fig. C-6b Shell response vs. excitation frequency; two nozzles open, shell with fixed-free end conditions, immersed in water.

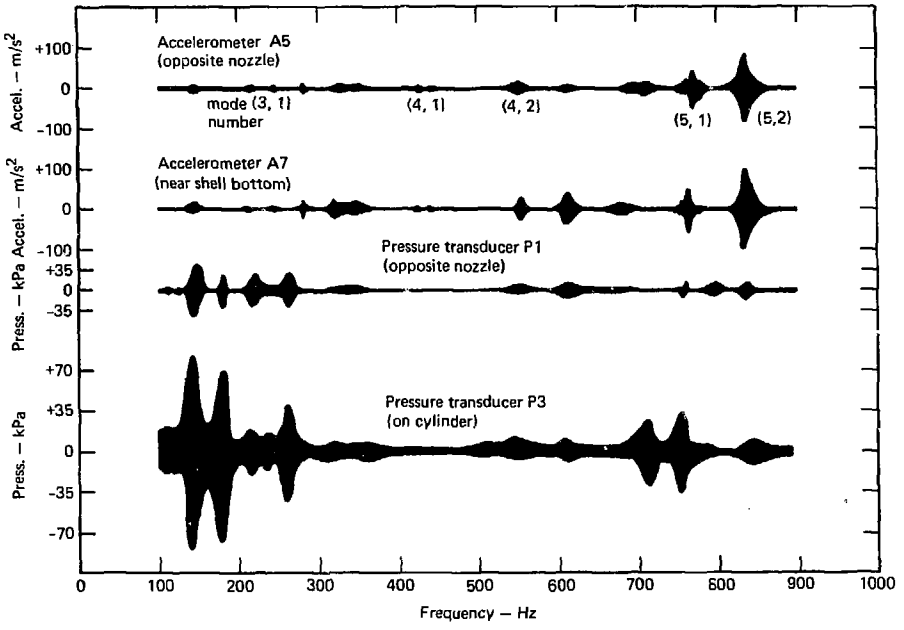

Fig. C-6c Shell response vs. excitation frequency; one nozzle open, shell with fixed-fixed end conditions, immersed in water.

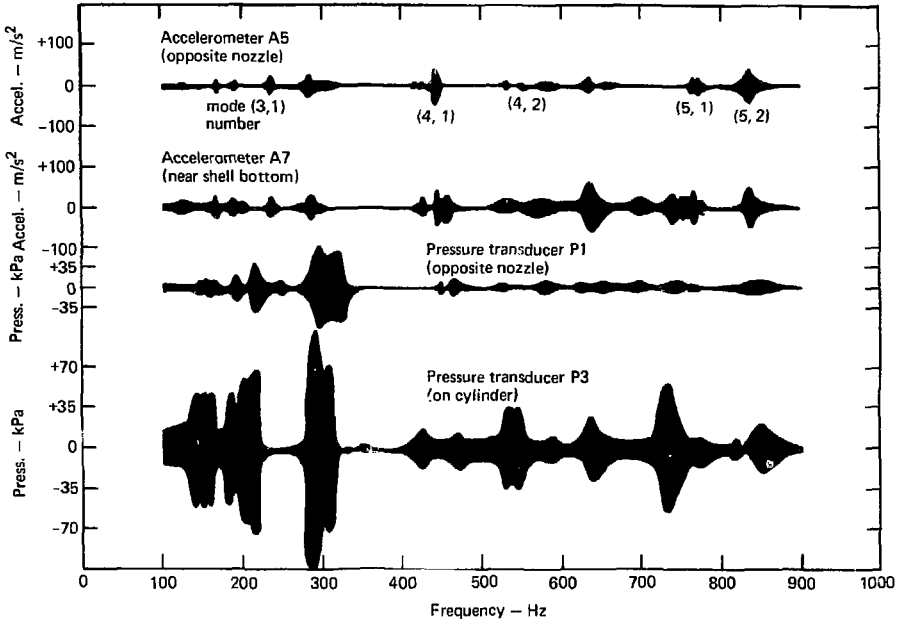

Fig. C-6d Shell response vs. excitation frequency; two nozzles open, shell with fixed-fixed end conditions, immersed in water.

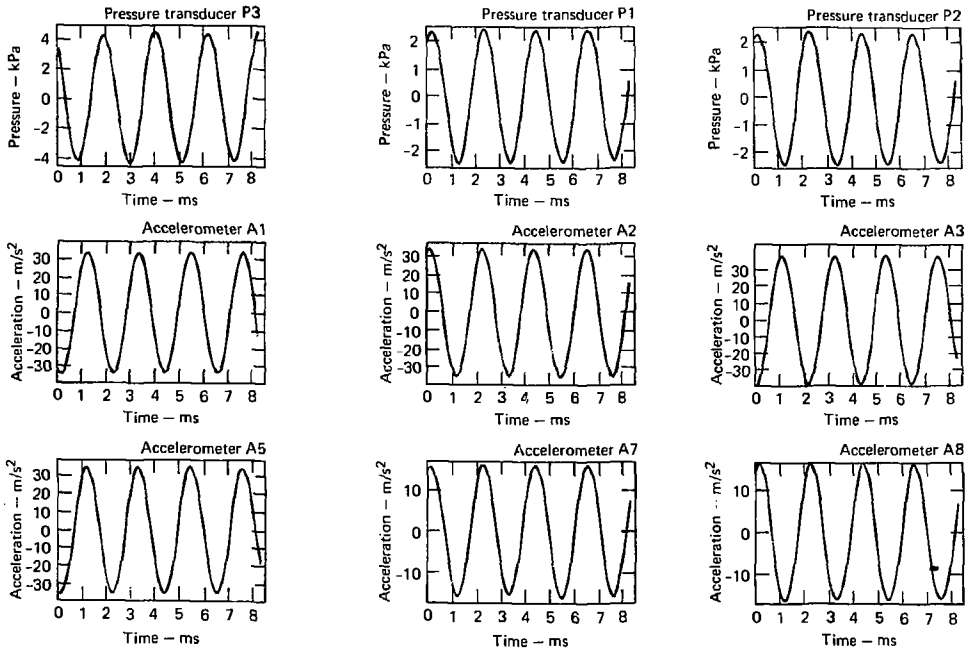

Fig. C-7 Time history of the shell response: two nozzles open, shell with fixed-free end conditions, pressure wave input frequency, 468 Hz.

identification of those which correspond to shell natural frequencies. Even so, some resonances could not be resolved, i.e. the (2, 3/2), (3, 3/2) and a water column resonance all occur near 300 Hz (see Figs. C-6a,b), but could not be resolved. In general, if two modal frequencies where closer than 15 Hz they could not be resolved. At frequencies below 150 Hz the feedback from the fluid system to the exciter was such as to distort the harmonic wave form making data unusable below that point.

Time history records of the piston pressure, shell surface pressure, and the shell response at various points on the shell at the (4, 3/2) resonance are shown in Figs. C-7 . The response data was captured at an instant of time, digitized, recorded, and then displayed, as shown, using TDAC. Comparison of the amplitude and phase of the accelerometer signals helped to identify the mode excited. For instance, comparison of the signal from accelerometers A3 and A7 show that they are 180 degrees out of phase with the A7 signal half the amplitude of the A3 signal. Since A3 is near an anti-node of the (4, 3/2) mode and A7 below the node this verified that the 3/2 mode is the axial mode excited. In a similar manner other modes were identified.

Modal damping ratios in the fluid are shown in Table C-5. These are close to the values to be expected from structural damping alone. For these particular modes, in this geometry, damping caused by the fluid appears minimal.

Figures C-8a,..., d illustrate how the radial displacement was computed by numerical integration of the radial acceleration record shown in Fig. C-8a. Even though the acceleration was distorted by an

odd-harmonic of the input frequency (see the Fourier transform of the accelerometer signal in Fig. C-8b) the displacement peak computes to the value that would be calculated assuming simple harmonic motion (C-2). Fig. C-8c shows the radial velocity computed by integration of the acceleration signal. Fig. C-8d shows the radial displacement computed by integration of the radial velocity. Accelerometer A1 is located mid-way between the inlet ports and the excitation was at the resonant frequency of the (3, 1/2) mode in water.

Table C-5 - Damping Ratios, $\frac{\lambda}{C_c}$

$$C_c = 2M_{eff}\Omega$$

Fixed-Free Shell End Conditions				Fixed-Fixed Shell End Conditions			
n	m	water	oil	n	m	water	oil
3	1/2	0.40%	0.7%	3	1	0.38%	0.8%
4	1/2	0.24	0.4	4	1	0.23	0.7
	3/2	0.21			2	0.29	
	5/2	0.30					
5	1/2	0.12	0.2	5	1	0.14	0.2
	3/2	0.12			2	0.16	
	5/2	0.15					

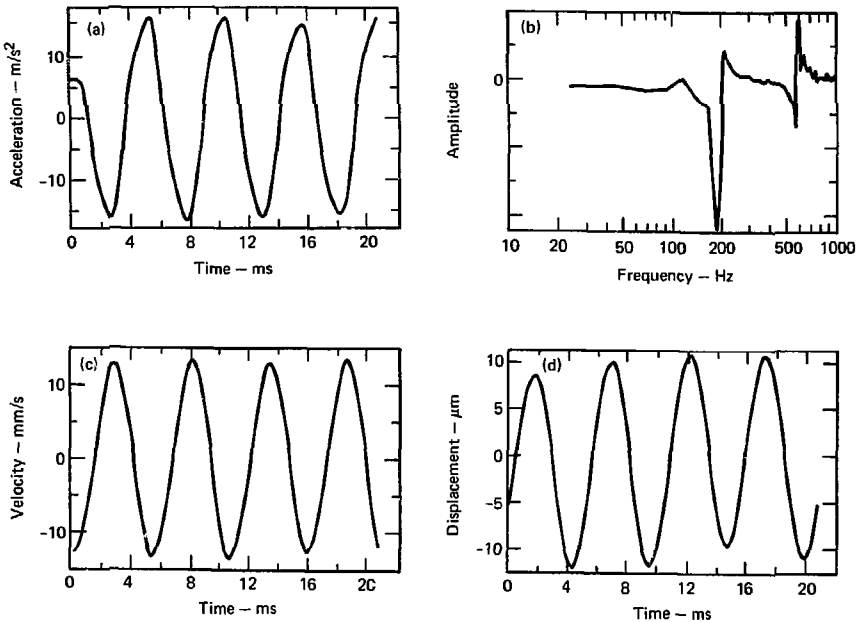

Fig. C-8 Computation of shell radial displacement: one nozzle open, shell with fixed-free end conditions, pressure wave input frequency of 191 Hz, signal from accelerometer A1.

REFERENCES FOR APPENDIX C

C-1. Fisher, D. K., Posehn, M. R., Sindelar, F. L., and Bell, H. H., "A Computer-Based Transportable Data Acquisition and Control System," Lawrence Livermore Laboratory Report UCRL-78339, (Sept. 1976).

C-2. Eddington, R. B., "Investigation of Supersonic Shock Phenomena in a Two-Phase (liquid-gas) Tunnel", NASA Tech. Rept. 32-1096, Jet Propulsion Lab., Pasadena, Calif. (March 1967).

C-3. Thomson, W. T., Theory of Vibration with Applications, Prentice-Hall Inc., Englewood Cliffs, New Jersey, (1972).

C-4. Assedo, R., Epstein, A., Gilbert, R., and Livolant, M., "Synthesis of Vibration Studies on a Three Loop PWR Internals Model," Trans. Fourth Inter. Conf. on Structural Mechanics in Reactor Technology, San Francisco, (1977), Paper F5/3.

APPENDIX D - THE COMPUTER CODE SHELVIB

Included in this appendix is a listing of the computer code, SHELVIB, which was used to generate the results presented. Also included are the input and a portion of the output for a sample problem. SHELVIB is designed to run on a CDC 7600 computer and is coded in LRLTRAN [D-1], an extended version of FORTRAN IV. Note that the compiler used automatically sets all variables and arrays to zero and can handle mixed mode arithmetic.

The computer code consists of a main program and seventeen subprogams. The main program is used to call in the input, initialize variables, call the subroutines necessary to calculate the shell displacements during each time iteration, print out results, and plot the results. The principle subprograms are a printing routine (STRS), a plotting routine (FPLOTT), a poisson equation solver which calculates the fluid dynamic pressures (PWSCYL), and two matrix inversion routines (DEC/SOL, LINV1F). The remaining sub-programs help set up and manipulate the matrix shell equations. The nomenclature used is described in the code listing. Data is input using NAMELIST statements. Output can be requested for any or all space stations but is only plotted at the quarter points. The code calculates in the English system of units.

The sample problem is the calculation of the shell response to a 1 psi, mid-point,step load with a 10 ms rise time. The shell is simply-supported at both ends and surrounded by water contained in a stiff-walled, coaxial, outer cylinder. The shell is empty. The calculation is for the 5th circumferential mode ($\Omega/2\pi = 50$ hz). Only a partial output is shown. The plot is the time history of the non-dimensional radial displacement, w at the mid-point.

```
      PROGRAM SHELVIB (FLIN,TAPE2=FLIN,OUTPT,TAPE3=OUTPT)
C
C  A COMPUTER CODE TO DETERMINE THE DYNAMIC RESPONSE OF A CIRCULAR
C  CYLINDRICAL SHELL IMMERSED IN A POTENTIAL FLUID TO AN ARBITRARY
C  RADIAL FORCING FUNCTION.  THE CODE CALCULATES THE TIME HISTORY OF
C  THE THREE COMPONENTS OF THE SHELL'S DISPLACEMENT VECTOR AND THE AXIAL
C  BENDING MOMENT FOR ANY CIRCUMFERENTIAL MODE, EN.  SOLUTIONS CAN BE
C  OBTAINED FOR THE SHELL IN VACUO, FILLED WITH LIQUID, SURROUNDED BY
C  LIQUID, OR IMMERSED IN A THICK-WALLED COAXIAL CYLINDER.  THE CODE IS
C  TAILORED TO CALCULATE THE STEADY STATE RESPONSE OF A NUCLEAR REACTOR
C  CORE BARREL TO FLOW INDUCED EXCITATION.
C
C  NOMENCLATURE
C
C  A(4,4)--MATRIX COEFFICIENT DEFINED BY (B-10)
C  AO(4,4)--MATRIX COEFFICIENT DEFINED BY (B-10)
C  AA--SHELL RADIUS, (IN.)
C  ACC--DIMENSIONLESS SHELL RADIAL ACCELERATION
C  ACCA--ABSOLUTE VALUE OF ACC
C  ACCP(J)--ARRAY FOR STORAGE OF ACC AT SHELL MIDPOINT
C  ALPHA--COEFFICIENT FOR DIFFERENCED FORM OF TIME DERIVATIVE (B-6A)
C  ALABEL(30)--LABELS FOR PLOTS
C  B(4,4)--MATRIX COEFFICIENT DEFINED BY (B-10)
C  BO(4,4)--MATRIX COEFFICIENT DEFINED BY (B-10)
C  BDAI(I)--VALUES OF DERIVATIVE ALONG INNER RADIUS OF INNER FLUID,
C           (D/DR)(P(A)),NORMALLY SET EQUAL TO 0.(PSI/IN.)
C  BDAO(I)--VALUES OF DERIVATIVE ALONG INNER RADIUS OF OUTER FLUID,
C           (D/DR)(P(A)).(PSI/IN.)
C  BDBI(I)--VALUES OF DERIVATIVE ALONG OUTER RADIUS OF INNER FLUID.
C           (D/DR)(P(B)).(PSI/IN.)
C  BDBO(I)--VALUES OF DERIVATIVE ALONG OUTER RADIUS OF OUTER FLUID,
C           (D/DR)(P(B)),NORMALLY SET EQUAL TO 0.(PSI/IN.)
C  BDC(K)--VALUES OF DERIVATIVE AT X=0,(D/DX)(P(0)),USED WHEN
C          NBDCND=3 OR 4.(PSI/IN.)
C  BDD(K)--VALUES OF DERIVATIVE AT X=L,(D/DX)(P(L)),USED WHEN
C          NBDCND=2 OR 3.(PSI/IN.)
C  BETA--COEFFICIENT FOR DIFFERENCED FORM OF TIME DERIVATIVE (B-6A)
C  BN(4,4)--MATRIX COEFFICIENT DEFINED BY (B-10)
C  C(4,4)--MATRIX COEFFICIENT DEFINED BY (B-10)
C  CI(4,4)--TEMPORARY STORAGE MATRIX
C  CC(IPP,IPP)--STORAGE MATRIX FOR G(I) VECTORS DEFINED BY (B-16)
C  CDP--DIMENSIONLESS DAMPING COEFFICIENT DEFINED BY (2C) =2*(DAMPING RATIO)
C       *AA*(6.28*NAT. FREQ.)*(W*HH+WF*PHIAVG)/HH*SQRTF(386.4*E*W)
C  CN(4,4)--MATRIX COEFFICIENT DEFINED BY (B-10)
C  CX(IPP)--STORAGE ARRAY USED IN CAPACITANCE MATRIX TECHNIQUE
C  DELTA--DIMENSIONLESS SPACE INCREMENT, SS/AA*N
C  E--ELASTIC MODULUS, (PSI)
C  EE(4,I)--MATRIX DEFINED BY (B-10) WHICH COVERS SPACE STATIONS
C          I=1,2,...,N+1
C  EEO(4)--COLUMN MATRIX DEFINED BY BOUNDARY CONDITIONS AT X=0 (B-10)
C  EEN(4)--COLUMN MATRIX DEFINED BY BOUNDARY CONDITIONS AT X=L (B-10)
C  ELO(4,JEL)--DIMENSIONLESS COLUMN MATRIX,L,DEFINED BY (11)
C  ELDO(4,JEL)--DIMENSIONAL COLUMN MATRIX, L,DEFINED BY (11)
C  ELDN(4,JEL)--DIMENSIONAL COLUMN MATRIX, L,DEFINED BY (11)
C  ELMBOA--  -EN**2
C  ELN(4,JEL)--DIMENSIONLESS COLUMN MATRIX,L,DEFINED BY (11)
C  ELS--(HH/AA)**2
C  EN--FOURIER INDEX
C  EPS--DIMENSIONLESS TIME INCREMENT, EPSILON
C  ETAEL(J)--TIME AT WHICH BOUNDARY CONDITIONS ARE INPUT, (SEC.)
C  ETAU--TIME WHEN LOADING IS SPECIFIED ON SHELL, (SEC.)
C  ETAUL--TIME WHEN PRESSURE IS SPECIFIED ON OUTER FLUID BOUNDARY, (SEC.)
C  EXL(I)--SPACE NODE AT WHICH LOAD ON SHELL IS SPECIFIED AT EARLIER
C          TIMES, (IN. FROM BOTTOM)
C  EXU(I)--SPACE NODE AT WHICH LOADING ON SHELL IS SPECIFIED AT LATER TIMES,
C          (IN. FROM BOTTOM)
C  EXUL(I)--SPACE NODES WHERE PRESSURE ON OUTER FLUID BOUNDARY IS
C           SPECIFIED,  (IN.)
C  F(K,I)--DYNAMIC PRESSURE IN FLUID REGIONS, P, (PSI)
C  FL(I)--PRESSURE SPECIFIED ON OUTER FLUID BOUNDARY AT EARLIER
C         TIMES, (PSI)
C  FP(I)--PRESSURE SPECIFIED ON OUTER FLUID BOUNDARY AT LATER TIMES, (PSI)
C  FS(I)--NET HYDRAULIC LOADING ON SHELL DUE TO SHELL MOTION
C         EVALUATED AT PREVIOUS HALF TIME STEP=FS1(I)+FS2(I), (PSI)
C  FS1(I)--OUTER FLUID HYDRAULIC LOAD AT HALF TIME STEP, (PSI)
C  FS2(I)--INNER FLUID HYDRAULIC LOAD AT HALF TIME STEP, (PSI)
C  FSI(I)--INNER FLUID HYDRAULIC LOAD AT CURRENT TIME STEP, (PSI)
C  FSO(I)--OUTER FLUID HYDRAULIC LOAD AT CURRENT TIME STEP, (PSI)
C  FSS(I)--NET HYDRAULIC LOADING ON SHELL DUE TO SHELL MOTION EVALUATED
C          AT CURRENT TIME STEP=FSO(I)+FSI(I), (PSI)
C  GAMMA--COEFFICIENT FOR DIFFERENCED FORM OF TIME DERIVATIVE (B-6A)
C  GNU--POISSON'S RATIO
C  H(4,4)--ASSOCIATED WITH BOUNDARY CONDITIONS (B-3)
C  HH--SHELL THICKNESS, (IN.)
C  HJ(4,4)--ASSOCIATED WITH BOUNDARY CONDITIONS (B-3)
C  IER--ERROR INDICATOR FOR MATRIX INVERSION SUBROUTINE DEC
C  IERROR--ERROR INDICATOR FOR SUBROUTINE PWSCYL
C  INTER--SPACE INTERVAL BETWEEN PRINTINGS
C  INTL=SENTINEL FOR SUBROUTINE PWSCYL= 0
```

```
C  IP--PLOT POINT INDEX
C  IPIV(25)--STORAGE ARRAY USED IN CAPACITANCE MATRIX TECHNIQUE
C  IPRINT--TIME PRINTING CONTROL
C  IPP--NUMBER OF SPACE NODES AT WHICH OUTER BOUNDARY PRESSURE IS
C        SPECIFIED
C  IPRINO--TIME INTERVALS BETWEEN PRINTINGS
C  IT--TIME STEP INDEX
C  JEL--NUMBER OF TIMES THE BOUNDARY CONDITIONS ARE SPECIFIED;
C        THE RANGE OF J IN ETAEL(J)
C  KP--FIRST SPACE NODE AT WHICH OUTER BOUNDARY PRESSURE IS SPECIFIED
C  M--M= N-1
C  MBDCNDI--INDICATES THE TYPE OF BOUNDARY CONDITIONS AT R=RIA AND R=RIB
C           FOR INNER FLUID
C           = 2  IF THE SOLUTION IS SPECIFIED AT R=RIA AND THE DERIVATIVE
C                OF THE SOLUTION WITH RESPECT TO R IS SPECIFIED AT R=RIB
C           = 3  IF THE DERIVATIVE OF THE SOLUTION WITH RESPECT TO R IS
C                SPECIFIED AT R=RIA AND R=RIB
C  MBDCNDO--INDICATES THE TYPE OF BOUNDARY CONDITIONS AT R=ROA AND R=ROB
C           FOR OUTER FLUID
C           = 3  IF THE DERIVATIVE OF THE SOLUTION WITH RESPECT TO R IS
C                SPECIFIED AT R=ROA AND R=ROB
C           = 4  IF THE DERIVATIVE OF THE SOLUTION WITH RESPECT TO R IS
C                SPECIFIED AT R=ROA AND THE SOLUTION IS SPECIFIED AT R=ROB
C  MQL--NUMBER OF AXIAL NODES AT WHICH LAST SHELL LOAD WAS SPECIFIED
C  MQU--NUMBER OF AXIAL NODES AT WHICH NEXT SHELL LOAD IS SPECIFIED
C  MRI--NUMBER OF RADIAL INTERVALS IN INNER FLUID REGION
C  MRO--NUMBER OF RADIAL INTERVALS IN OUTER FLUID REGION
C  N--NUMBER OF AXIAL SPACE INTERVALS
C  N14,N24,N34--QUARTER,HALF,AND THREE-QUARTER AXIAL NODE NUMBERS
C  NBDCNDI--INDICATES THE TYPE OF BOUNDARY CONDITIONS AT X=0 AND X=SS
C           FOR INNER FLUID
C           = 0  IF THE SOLUTION IS PERIODIC IN X, I.E., P(0,K)=P(N,K)
C           = 1  IF THE SOLUTION IS SPECIFIED AT X=0 AND X=SS
C           = 2  IF THE SOLUTION IS SPECIFIED AT X=0 AND THE DERIVATIVE
C                OF THE SOLUTION WITH RESPECT TO X IS SPECIFIED AT X=SS
C           = 3  IF THE DERIVATIVE OF THE SOLUTION WITH RESPECT TO X IS
C                SPECIFIED AT X=0 AND X=SS
C           = 4  IF THE DERIVATIVE OF THE SOLUTION WITH RESPECT TO X IS
C                SPECIFIED AT X=0 AND THE SOLUTION IS SPECIFIED AT X=SS
C  NBDCNDO--INDICATES THE TYPE OF BOUNDARY CONDITIONS AT X=0 AND X=SS
C           FOR OUTER FLUID.  NUMBER DESIGNATORS SAME AS NBDCNDI
C  NP--NUMBER OF POINTS TO BE PRINTED AND PLOTTED
C  OMEGA--FREQUNCY OF HARMONIC SHELL LOAD WITH HALF AMPLITUDE OF QU, (HZ)
C  OMEGAL--FREQUENCY OF HARMONIC PRESSURE PULSES ON OUTER FLUID
C           BOUNDARY WITH HALF AMPLITUDE OF FP,  (HZ)
C  OUT--SET EQUAL TO 1.0 IF OUTER FLUID PRESENT
C  P(4,4,I)--ARRAY REPRESENTING THE P MATRIX OF (B-11A) AT SPACE STATIONS
C            I=1,2,...,N-1
C  P1(4,4)--TEMPORARY STORAGE MATRIX
C  PERTRB--UNUSED ARGUMENT FOR SUBROUTINE PWSCYL= 0
C  PHI(I)--CONNECTED MASS FACTOR FOR NODE I DEFINED BY (14), (IN.)
C  PHIAVG--PHI AVERAGED OVER ALL SPACE NODES, (IN.)
C  PHIAVGP(J)--ARRAY FOR STORAGE OF PHIAVG AT TIMES TM, (IN.)
C  PHIRUNS--RUNNING AVERAGE OF PHIAVG, (IN.)
C  PMAX(40)--PEAK SHELL LOAD FOR HARMONIC LOADING, (PSI)
C  QL(I)--SPECIFIED SHELL LOAD AT THE POINTS EXL(I), (PSI)
C  R(4)--TEMPORARY STORAGE COLUMN MATRIX
C  QU(I)--SPECIFIED SHELL LOAD AT THE POINTS EXU(I), (PSI)
C  RIA--INNER FLUID INNER RADIUS, (IN.)
C  RIB--INNER FLUID OUTER RADIUS=AA, (IN.)
C  RO--COEFFICIENT FOR DIFFERENCED FORM OF TIME DERIVATIVE IN (B-6A)
C  ROA--INNER RADIUS OF OUTER FLUID=AA, (IN.)
C  ROB--OUTER RADIUS OF OUTER FLUID, (IN.)
C  ROC--BOTTOM OF SHELL, SET EQUAL TO 0
C  S(4)--TEMPORARY STORAGE COLUMN MATRIX
C  SIGMA--REFERENCE STRESS, (PSI)
C  SC--SHELL LENGTH, (IN.)
C  T(4,4),T1(4,4)--TEMPORARY STORAGE COLUMN MATRICES
C  TEE--CURRENT TIME, (SEC.)
C  TEPS--TIME INCREMENT, (SEC.)
C  TLIMIT--TIME STOP OF COMPUTER WHEN TEE>TLIMIT, (SEC.)
C  TM(300)--TIME COORDINATE ASSOCIATED WITH PLOTTED POINTS, (SEC.)
C  TOMO(4)--DIAGONAL ELEMENTS OF MATRIX OMEGA FROM BOUNDARY CONDITIONS
C           AT X=0 DEFINED BY (11)
C  TOMN(4)--DIAGONAL ELEMENTS OF MATRIX OMEGA FROM BOUNDARY CONDITIONS
C           AT X=SS DEFINED BY (11)
C  TT1(4,4,300)--TEMPORARY STORAGE MATRIX
C  W--SHELL WEIGHT DENSITY, (LBS/IN.**3)
C  WF--FLUID WEIGHT DENSITY, (LBS/IN.**3)
C  WWO(N*MRO)--STORAGE ARRAY FOR SUBROUTINE PWSCYL
C  X(4,I)--ARRAY REPRESENTING THE X-PEAK OF (B-11A) FOR SPACE STATIONS
C         I=1,2,...,N-1
C  X1(4)--TEMPORARY STORAGE COLUMN MATRIX
C  XIN--SET EQUAL TO 1.0 IF INNER FLUID PRESENT
C  XKAPPA--COEFFICIENT OF DIFFERENCED FORM OF TIME DERIVATIVE (B-6B)
C  XLAMBDA--COEFFICIENT OF DIFFERENCED FORM OF TIME DERIVATIVE (B-6B)
C  XMU--COEFFICIENT OF DIFFERENCED FORM OF TIME DERIVATIVE (B-6B)
C  XNU--COEFFICIENT OF DIFFERENCED FORM OF TIME DERIVATIVE (B-6B)
C  YMAX,YMIN--MAXIMUM AND MINIMUM ORDINATES ON PLOTS
C  Z(4,I)--Z MATRIX OF (B-1) AT SPACE NODES I=1,2,...,N
C  ZO(4)--Z AT I=0
```

```
C   Z1(4,1)--Z MATRIX AT TIME TAU=(J-1)*EPS
C   Z2(4,1)--Z MATRIX AT TIME TAU=(J-2)*EPS
C   Z3(4,1)--Z MATRIX AT TIME TAU=(J-3)*EPS
C   ZL(300),ZP(4,3,300)--STORAGE ARRAYS OF DATA TO BE PLOTTED
C
      OPTIMIZE
C
C MAIN
C
      CLICHE DIMCOM
      DIMENSION F(4,4,300),X(4,300),Z(4,300),Z1(4,300),Z2(4,300),
     1EE(4,300),Z0(4),A0(4,4),B0(4,4),EED(4),BN(4,4),CN(4,4),EEN(4),H(4,
     2H),HJ(4,4),ELO(4,40),ELN(4,40),ELDO(4,40),ELDN(4,40),TOMO(4),TOMN(
     3H),EXL(40),EXU(40),OL(40),OU(40),ETAEL(40),T(4,4),T1(4,4),P1(4,4),
     4X1(4),S(4),R(4),A(4,4),B(4,4),C(4,4),TT1(4,4,300),Z3(4,300),
     5Z1(4,4),ZP(4,3,300),TM(300),ZL(300)
      COMMON/P,Z,Z1,Z2,Z3,EE,Z0,A0,B0,EED,BN,CN,EEN,H,HJ,ELO,ELN,TOMO,
     1EXL,EXU,OL,OU,ETAEL,T,T1,P1,X1,S,R,A,B,C,GNU,ELS,XEN,DELTA,
     2SIGMA,EN,E,HH,AA,INTER,N,IPRINT,SS,IPRINO,TT1,C1,TEE,PHIAVG,
     3PHIRUNS,CDP,W,EPS,TOMN
      COMMON/BLK/ALABEL(20),YMAX,YMIN,N14,N24,N34,ZP,TM,ZL,IP,NP
      COMMON/OOPLOT/IPLOT(1274)
      LCM (WR)
      COMMON/WR/ BDA0(300),BDB0(300),BDC(20),BDD(20),FS(300),FHI(300),
     1BDA1(300),BDB1(300),FL(25),FPP(25),PMAX(40),FPMAX(40),FSO(300),
     2FSS(300),FS1(300),FS2(300),FS3(300)
      COMMON/WR1/ CC(25,25),IPIV(25),CX(25),FP(25),F(20,300),ACCP(300),
     1WKO(6002),ACC(300),EXUL(25),PHIAVG2(300)
      EQUIVALENCE (X(1),Z(1)),(ELO(1),ELDO(1)),(ELN(1),ELDN(1))
      ENDCLICHE
      USE DIMCOM
C
C INPUT LIST AS STORED IN FILE FLIN
C
      CALL CHANGE(7H+SHELVB)
      CALL CRTID(4HSHV1,1,1)
      CALL KEEPBO(10RDKSHELVBXX)
      CALL PLOTE
      CODE AMLYSIS
      NAMELIST /INP1/ EN,N,JEL,IPRINO,INTER,TLIMIT,AA,HH,SS,W,GNU,
     1E,SIGMA,TEPS,WF,XIN,OUT,OMEGA,OMEGAL,CDP
      NAMELIST/INP2/ TOMO,TOMN,ETAEL,ELDO,ELDN
      NAMELIST/INP3/ TOU,ETAU,EXU,OU
      NAMELIST/INP4/ RIA,RIB,MRI,MBDCNDI,NBDCNDI
      NAMELIST/INP5/ ROA,ROB,MRO,NBDCNDO,BDC,BOD,MBDCNDO
      NAMELIST/INP5/ ETAUL,IPP,KP,FP
      INPUT DATA INP1,2,0
      INPUT DATA INP2,2,0
      INPUT DATA INP3,2,0
      INPUT DATA INP4,2,0
      INPUT DATA INP5,2,0
      INPUT DATA INP6,2,0
C
C PRINT OUT INPUT DATA
C
  200 FORMAT (/1X,11H THICKNESS=F7.4,4H IN.,12X,7HRADIUS=F7.2,4H IN.,3X,
     17HLENGTH=F7.2,4H IN.)
      WRITE(3,200) HH,AA,SS
 2000 FORMAT(2X,"OUTER FLUID OUTER RADIUS=",F7.2," IN.",18X,"INNER
     1 FLUID INNER RADIUS=",F7.2," IN.")
  201 FORMAT(1X,15H SHELL DENSITY=F6.4,12H LBS./CU.IN.,1X,,2HE=F9.0,
     14H PSI,6X,6HSIGMA=F6.0,4H PSI,9X,3HNU=F5.4)
      WRITE(3,201) W,E,SIGMA,GNU
 2010 FORMAT(" FLUID DENSITY=",F6.4," LBS./CU.IN. XIN=",F4.2,11X,
     1" OUT=",F4.2)
  202 FORMAT(1X,16H TIME INCREMENT=E8.2,5H SECS,5X,16HNO. AXIAL NODES=
     1I4,1X,12HFOURIER NO.=F4.0,9X,4HCDP=E10.2)
      WRITE(3,202) TEPS,N,EN,CDP
      WRITE(3,2010) WF,XIN,OUT
 2020 FORMAT(" NO. OF RADIAL NODES IN OUTER FLUID=",I2,15X," NO.
     1 OF RADIAL NODES IN INNER FLUID=",I2)
 2021 FORMAT(" MBDCNDO=",I2,21X," NBDCNDO=",I2,9X,
     1" MBDCNDI=",I2,1X," NBDCNDI=",I2)
      WRITE(3,2021) MBDCNDO,NBDCNDO,MBDCNDI,NBDCNDI
      WRITE(3,2000) ROB,RIA
      WRITE(3,2020) MRO,MRI
 2022 FORMAT(" LOADING FREQUENCY ON SHELL SURFACE=",F7.2," HZ",9X,
     1"PRESSURE FREQUENCY ON FLUID SURFACE=",F7.2," HZ")
      WRITE(3,2022) OMEGA,OMEGAL
  203 FORMAT(//30X,20H BOUNDARY CONDITIONS//)
      WRITE(3,203)
  204 FORMAT(//1X,6H TIME=E10.2,5H SECS,17X,3HX=0.22X,3HX=L)
  205 FORMAT(1X,2H U,25X,E17.7,F5.1,3X,E17.7,F5.1)
  206 FORMAT(1X,2H V,25X,E17.7,F5.1,3X,E17.7,F5.1)
  207 FORMAT(1X,2H W,25X,E17.7,F5.1,3X,E17.7,F5.1)
  208 FORMAT(1X,5H M-XI,22X,E17.7,F5.1,9X,E17.7,F5.1)
      DO 300 J=2,JEL
```

```
      WRITE(3,204) ETAEL(J)
      WRITE(3,205) ELDO(1,J),TOMO(1),ELDN(1,J),TOMN(1)
      WRITE(3,206) ELDO(2,J),TOMO(2),ELDN(2,J),TOMN(2)
      WRITE(3,207) ELDO(3,J),TOMO(3),ELDN(3,J),TOMN(3)
  300 WRITE(3,208) ELDO(4,J),TOMO(4),ELDN(4,J),TOMN(4)
C
C INITIALIZATION
C
      IF(N-300) 915,915,996
  915 M=N-1
      ELMBDA=-EN*EN
      XN=N
      DELTA=SS/(AA*XN)
      ELS=(HH/AA)**2
      EPS=(TEPS/AA)*SQRTF(E*386.4/W)
      ALPHA=6.0/EPS**2
      TEE=TEPS
      EXL(2)=SS
      MDL=2
      IT=1
      IPRINT=IPRINO
      XEN=EN
      YMAX=0.
      YMIN=0.
      N14=N/4
      N24=N/2
      N34=N14*3
      DO 600 I=1,30
  600 ALABEL(I)=10H
      ALABEL(22)=10HTIME
      ALABEL(23)=10HSECONDS
      NP=(TLIMIT/(TEPS*IPRINO))
      DO 231 J=1,MOU
  231 PMAX(J)=QU(J)
      DO 232 J=1,IPP
  232 FPMAX(J)=FP(J)
      CD=(14.0*DELTA)/(6.0*EPS)
C
C CALCULATION OF A,B,C, THE COEFFICIENT MATRICES OF EQ.(B-10)
C
      CALL MABC
C
C CALCULATION OF AO,BO,BN,CN, THE COEFFICIENT MATRICES OF EQ.(B-10) FOR THE
C SHELL ENDS
C
      DO 46 I=1,4
      DO 46 J=1,4
      J=J
      AO(I,J)=(2.0/DELTA)*TOMO(I)*H(I,J)
      BO(I,J)=TOMO(I)*(HJ(I,J)-(1.5/DELTA)*H(I,J))
      BN(I,J)=TOMN(I)*(HJ(I,J)+(1.5/DELTA)*H(I,J))
   46 CN(I,J)=-(2.0/DELTA)*TOMN(I)*H(I,J)
      DO 47 I=1,4
      BO(I,I)=BO(I,I)+1.0-TOMO(I)
   47 BN(I,I)=BN(I,I)+1.0-TOMN(I)
C
C CALCULATION OF ELO AND ELN, THE DIMENSIONLESS COLUMN MATRICES, L DESCRIBING
C THE SHELL END CONDITIONS AS DEFINED BY EQ..(11)
C
      DO 51 J=2,JEL
      ELO(4,J)=((TOMO(4)*E+(1.0-TOMO(4))*AA/(HH**3))*ELDO(4,J)/SIGMA
      ELN(4,J)=((TOMN(4)*E+(1.0-TOMN(4))*AA/(HH**3))*ELDN(4,J)/SIGMA
      DO 51 I=1,3
      ELO(I,J)=((TOMO(I)/HH+(1.0-TOMO(I))*E/AA)*ELDO(I,J)/SIGMA
   51 ELN(I,J)=((TOMN(I)/HH+(1.0-TOMN(I))*E/AA)*ELDN(I,J)/SIGMA
C
C PREPROCESSING OF OUTER FLUID EQUATIONS IF MIXED BOUNDARY VALUES ARE SPECIFIED
C ON THE OUTER FLUID BOUNDARY (IPP>0).  THE MATRIX CC IS GENERATED.
C
      IDIMF=20
      IF(IPP-1) 65,53,53
   53 DO 100 K=1,IPP
      DO 99 J=1,N+1
      BDAO(J)=0.
      BDBO(J)=0.
      DO 99 I=1,MRO+1
   99 F(I,J)=0.
      F(MRO+1,KP+K-1)=1.0
      KK=MRO+1
      CALL PWSCYL(INTL,ROA,ROB,MRO,MBDCNDO,BDAO,BDBO,ROC,SS,N,NBDCNDO,
     *BDC,BDD,ELMBDA,F,IDIMF,PERTRB,IERROR,WWO)
      IF(IERROR.NE.0) WRITE(59,241) IERROR
  241 FORMAT("IERROR",I5)
      DO 100 I=1,IPP
      CC(I,K)=F(MRO+1,KP+I-1)
  100 CONTINUE
      CALL DEC(IPP,25,CC,IPIV,IER)
      IF(IER.NE.0) WRITE(59,242) IER
  242 FORMAT("IER",I5)
      DO 991 I=1,MRO
      DO 991 J=1,N+1
   99: F(I,J)=0.
C
```

```
C IF IT IS T IE FOR A NEW PRESSURE TO BE SPECIFIED ON THE OUTER FLUID
C BOUNDARY OR A NEW LOADING ON THE SHELL THAT NEW VALUE WILL NOW BE
C PRINTED OUT. IF HARMONIC EXCITATION IS USED THE NEW PRESSURE OR LOADING
C IS NOT CALCULATED AND PRINTED.
C
   65 IF(MOU-999) 52,999,52
C PRINT PRESSURES
  209 FORMAT(//194 PRESSURES AT TIME=E10.2,5H SECS)
  210 FORMAT(13H STATION (IN),15X,15H PRESSURE (PSI)//)
   52 IF(OMEGA.EQ.0.) 55,233
  233 TAU=ETAU+0.04/OMEGA
      IF(TAU-TEE) 234,235,235
  234 TAU=TEE
  235 ARG=2.0*3.1416*OMEGA*TAU
      DO 236 J=1,MOU
  236 QU(J)=PMAX(J)*SIN(ARG)
      ETAU=TEE
      IF(IT-IPRINT) 56,55,55
   55 WRITE (3,209) ETAU
      WRITE (3,210)
  211 FORMAT((F13.2,17X,F12.3))
      WRITE (3,211) (EXU(J),QU(J),J=1,MOU)
   56 IF(OMEGAL.EQ.0.) 521,237
  237 TAU=ETAUL+0.04/OMEGAL
      IF(TAU-TEE) 238,239,239
  238 TAU=TEE
  239 ARG=2.0*3.1416*OMEGAL*TAU
      DO 240 J=1,IPP
  240 FP(J)=FPMAX(J)*SIN(ARG)
      ETAUL=TEE
  221 FORMAT(//"FLUID PRESSURE ON OUTE  BOUNDARY AT",E16.7,"SECS")
  222 FORMAT("STATION NO.",15X,"PRESSURE ON FLUID BOUNDARY(PSI)"//)
  223 FORMAT((F13.2,17X,F12.3))
      IF(IT-IPRINT) 69,521,521
  521 IF(IPP.EQ.0) 69,523
  523 WRITE (3,221) ETAUL
      WRITE (3,222)
      DO 522 J=1,IPP
  522 EXUL(J)=KP+J
      WRITE (3,223) (EXUL(J),FP(J),J=1,IPP)
C
C CALCULATE THE COEFFICIENTS FOR THE TIME DIFFERENCE EQUATIONS (B-6A,B).
C CHANGE APPROPRIATE ELEMENTS OF THE B COEFFICIENT MATRIX ACCORDINGLY.
C UPDATE THE TIME STORAGE ARRAYS HOLDING PREVIOUS VALUES OF Z.
C
   69 IF(IT-4) 87,56,85
   87 IF(IT-1) 999,85,77
   77 IF(IT-2) 999,78,75
   78 BETA=-4.0/EPS**2
      ALPHA=2.0/EPS**2
      XMEGPA=11.0/(6.0*EPS)
      XLAMDA=-6.0/(3.0*EPS)
      B(1,1)=B(1,1)+8.0*DELTA/(EPS**2)+CD*CP
      B(2,2)=B(2,2)+8.0*DELTA/(EPS**2)+CD*CDP
      B(3,3)=B(3,3)+8.0*DELTA/(EPS**2)+CD*CDP
      GO TO 85
   75 IF(IT-3) 999,79,999
   79 BETA=-5.0/EPS**2
      GAMMA=4.0/EPS**2
      ALPHA=2.0/EPS**2
      XLAMDA=-3.0/EPS
      XMU=5.0/(2.0*EPS)
      GO TO 85
   86 BETA=-5.0/EPS**2
      GAMMA=4.0/EPS**2
      RO=-1.0/EPS**2
      XNU=-1.0/(3.0*EPS)
      ALPHA=2.0/EPS**2
   85 DO 33 J=1,M
      DO 33 I=1,3
      Z3(I,J)=Z2(I,J)
      Z2(I,J)=Z1(I,J)
   33 Z1(I,J)=Z(I,J)
C
C IF THE PRESSURE IS SPECIFIED ON THE OUTER FLUID BOUNDARY, (IPP>0), THE
C LOAD ON THE SHELL CAUSED BY THIS PRESSURE IS CALCULATED HERE AND STORED
C IN F. INTERPOLATION BETWEEN NEW, FP, AND OLD, FL,  VALUES
C IS PERFORMED.
C
      DO 301 J=1,N+1
      BDAD(J)=0.
      DO 301 I=1,MRO+1
  301 F(I,J)=0.
      IF(IPP-1) 91,307,307
  307 DO 302 K=1,IPP
      FPP(K)=((ETAUL-TEE)*FL(K)+(TEE-ETALL)*FP(K))/(ETAUL-ETALL)
```

```
      302 F(MRO+1,KP+K-1)=FPP(K)
          CALL PWSCYL(INTL,ROA,ROB,MRO,MBDCNDO,BDAO,BDBO,ROC,SS,N,NBDCNDO,
         *BDC,BDD,ELMBDA,F,IDIMF,PERTRB,IERROR,WWO)
          IF(IERROR.NE.0) WRITE(59,241) IERROR
          DO 303 K=1,IPP
      303 CX(K)=FPP(K)-F(MRO+1,KP+K-1)
          CALL SOL(IPP,25,CC,CX,IPIV)
          DO 304 J=1,N+1
          DO 304 I=1,MRO+1
      304 F(I,J)=0
          DO 305 K=1,IPP
      305 F(MRO+1,KP+K-1)=FPP(K)+CX(K)
          CALL PWSCYL(INTL,ROA,ROB,MRO,MBDCNDO,BDAO,BDBO,ROC,SS,N,NBDCNDO,
         *BDC,BDD,ELMBDA,F,IDIMF,PERTRB,IERROR,WWO)
          IF(IERROR.NE.0) WRITE(59,241) IERROR
      224 FORMAT(//20X,"PRESSURE TRANSMITTED THROUGH FLUID TO SHELL"/)
      225 FORMAT(5E13.3/)
          IF(TIME.INT) 91,227,227
      227 WRITE (3,224)
          DO 226 IXO=1,N24,9
      226 WRITE (3,225) (F(I,II),II=IXO,IXO+8)
C
C CALCULATE EE, THE NEW VALUE FOR THE INHOMOGENEOUS PART OF EQ.(B-10).
C ANY EXTERNALLY SPECIFIED SHELL LOADING, OU AND/OR, F OR THE
C INTERNALLY CALCULATED HYDRODYNAMIC PRESSURE FOR THE LAST TIME STEP, FS
C IS INCORPORATED HERE.
C
   91 JL=2
      JU=2
      DO 34 K=1,M
      XK=K
      EX=XK*DELTA*AA
      DO 36 J=JL,MQL
      J=J
      IF(EXL(J)-EX) 36,36,37
   36 CONTINUE
   37 QOL=((EXL(J)-EX)*QL(J-1)+(EX-EXL(J-1))*QL(J))/(EXL(J)-EXL(J-1))
      JL=J
      DO 39 J=JU,MQU
      J=J
      IF(EXU(J)-EX) 39,39,40
   39 CONTINUE
   40 QOU=((EXU(J)-EX)*QU(J-1)+(EX-EXU(J-1))*QU(J))/(EXU(J)-EXU(J-1))
      JU=J
      PEE= (AA/(SIGMA*HH))*(((ETAU-TEE)*QOL+(TEE-ETAL)*QOU)/(ETAU-ETAL)
     *+FS(K+1)+F(1,K+1))
      DO 81 I=1,3
   81 EE(I,K)=2.0*DELTA*Z1(I,K)
     1*(BETA*VLAMBDA*CDP)
     2+2.0*DELTA*Z2(I,K)*(GAMMA*XMU*CDP)
     3+2.0*DELTA*Z3(I,K)*(RO+XNU*CDP)
   34 EE(3,K)=EE(3,K)+2.0*DELTA*PEE
C
C CALCULATE EEO AND EEN, THE INHOMOGENEOUS PARTS OF EQS.(B-10A,C).
C INTERPOLATE BETWEEN THE NEW, OU, AND OLD, QL, END CONDITIONS.
C
      DO 42 J=2,JEL
      J=J
      IF(ETAEL(J)-TEE) 42,42,44
   42 CONTINUE
   44 DO 45 I=1,4
      EEO(I)=((ETAEL(J)-TEE)*ELO(I,J-1)+(TEE-ETAEL(J-1))*ELO(I,J))/
     1(ETAEL(J)-ETAEL(J-1))
   45 EEN(I)=((ETAEL(J)-TEE)*ELN(I,J-1)+(TEE-ETAEL(J-1))*ELN(I,J))/
     1(ETAEL(J)-ETAEL(J-1))
C
C
C CALCULATION OF Z ************************
C
C CALCULATE P-SUB-1 AND X-SUB-1, THE COEFFICIENT AND CONSTANT FOR THE RECURRENCE
C EQUATION AT THE FIRST AXIAL NODE.
C
      CALL SCA(0.25,AO,T)
      DO 92 I=1,4
      DO 92 J=1,4
   92 C1(I,J)=C1(I,J)
      CALL LINVIF(C1,4,4,T1,0)
      CALL AB(BO,T1,P1)
      CALL AB(P1,A,T1)
      CALL ADD(T1,T,T)
      CALL ZX(EE,1,S)
      CALL AX(P1,S,R)
      CALL SCX(-1.0,EEO,S)
      CALL AD(S,R,S)
      CALL AB(P1,B,T1)
      CALL SCA(-1.0,AO,P1)
      CALL ADD (T1,P1,T1)
      CALL LINVIF(T1,4,4,P1,0)
      CALL AB(P1,T,T1)
      CALL QP(T1,1,P)
      CALL AX(P1,S,R)
      CALL XZ(R,1,X)
C
C CALCULATE P, X FOR THE RECURRENCE EQUATION (B-11A)
```

```
541 C
542        DO 31 K=2,M
543        CALL PQ(P,K-1,T)
544        IF(IT-4) 909,909,910
545    910 DO 911 I=1,4
546        DO 911 J=1,4
547    911 T1(I,J)=TT1(I,J,K)
548        GO TO 912
549    909 CALL AB(C,T,T1)
550        CALL SCA(-1.0,T1,T)
551        CALL ADD(B,T,T)
552        CALL LINV1F(T,4,4,T1,0)
553        IF(IT-4) 912,913,913
554    913 DO 914 I=1,4
555        DO 914 J=1,4
556    914 TT1(I,J,K)=T1(I,J)
557    912 CALL AB(T1,A,T)
558        CALL QP(T,K,P)
559        CALL ZX(X,K-1,S)
560        CALL AX(C,S,R)
561        CALL SCX(-1.0,R,S)
562        CALL ZX(EE,K,R)
563        CALL AD(R,S,S)
564        CALL AX(T1,S,R)
565     31 CALL XZ(R,K,X)
566 C
567 C CALCULATE Z-SUB-N USING EQUATION (B-11B)
568 C
569        CALL ZX(X,M-1,R)
570        CALL SCX(-0.25,R,X1)
571        CALL PQ(P,M-1,T)
572        CALL ZX(X,M,R)
573        CALL AD(R,X1,S)
574        CALL AX(T,R,X1)
575        CALL SCX(0.25,X1,R)
576        CALL AD(R,S,S)
577        CALL AX(CN,S,R)
578        CALL SCX(-1.0,EEN,S)
579        CALL AD(R,S,S)
580        CALL PQ(P,M,11)
581        CALL AB(T,T1,P1)
582        CALL SCA(0.25,P1,T)
583        CALL ADD(T1,T,T)
584        CALL AB(CN,T,T1)
585        CALL SCA(-1.0,BN,T)
586        CALL ADD(T,T1,T)
587        CALL LINV1F(T,4,4,T1,0)
588        CALL AX(T1,S,R)
589        CALL XZ(R,N,Z)
590 C
591 C CALCULATE Z-SUB-I
592 C
593        DO 32 J=1,M
594        CALL ZX(Z,N+1-J,R)
595        CALL PQ(P,N-J,T)
596        CALL AX(T,R,S)
597        CALL SCX(-1.0,S,R)
598        CALL ZX(X,N-J,S)
599        CALL AD(S,R,S)
600     32 CALL XZ(S,N-1,Z)
601 C
602 C CALCULATE Z-SUB-0 USING EQUATION (B-11C)
603 C
604        CALL ZX(Z,1,R)
605        CALL AX(B,R,S)
606        CALL ZX(Z,2,R)
607        CALL AX(A,R,X1)
608        CALL AD(X1,S,R)
609        CALL SCX(-1.0,R,S)
610        CALL ZX(EE,1,R)
611        CALL AD(R,S,R)
612        DO 93 I=1,4
613        DO 93 J=1,4
614     93 C1(I,J)=C(I,J)
615        CALL LINV1F(C1,4,4,T,0)
616        CALL AX(T,R,Z0)
617 C
618 C
619 C CALCULATE SHELL ACCELERATION AND PRESSURE DERIVATIVE ALONG THE SHELL
620 C FROM EQ.(9).
621 C
622        DO 331 J=1,M
623        ACC(J)=ALPHA*Z(3,J)+BETA*Z1(3,J)+GAMMA*Z2(3,J)+RO*Z3(3,J)
624        BDAD(J+1)=((SIGMA*WF)/(AA*W))*ACC(J)
625    331 BDB1(J+1)=-BDAD(J+1)
626        IF(WF-0.) 26,26,320
627    320 IF(OUT-1.0) 217,321,217
628 C
629 C CALCULATE PRESSURE FIELD IN OUTER FLUID
```

```
C
  321 IF(IPP-1) 212,334,334
  334 DO 101 J=1,N+1
      DO 101 I=1,MRO+1
  101 F(I,J)=0.
      IF(IPP-1) 212,335,335
  335 DO 102 K=1,IPP
      FP(K)=((ETAUL-TEE)*FL(K)+(TEE-ETAUL)*FP(K))/(ETAUL-ETALL)
  102 F(MRO+1,KP+K-1)=FPP(K)
      CALL PWSCYL(INTL,ROA,ROB,MRO,MBDCND0,BDA0,BDB0,ROC,SS,N,NBDCND0,
     *BDC,BDD,ELMDDA,F,IDIMF,PERTRB,IERROR,WW0)
      IF(IERROR.NE.0) WRITE(69,241) IERROR
      DO 103 K=1,IPP
  103 CX(K)=FPP(K)-F(MRO+1,KP+K-1)
      CALL SOL(IPP,25,CC,CX,IPIV)
      DO 113 J=1,N+1
      DO 113 I=1,MRO+1
  113 F(I,J)=0.
      DO 104 K=1,IPP
  104 F(MRO+1,KP+K-1)=FPP(K)+CX(K)
  212 CALL PWSCYL(INTL,ROA,ROB,MRO,MBDCND0,BDA0,BDB0,ROC,SS,N,NBDCND0,
     *BDC,BDD,ELMDDA,F,IDIMF,PERTRB,IERROR,WW0)
      IF(IERROR.NE.0) WRITE(69,241) IERROR
  218 DO 219 J=1,N+1
      FS1(J)=FS0(J)
      FS1(J)=FS1(J)+0.5*(F(1,J)-FS1(J))
  219 FS0(J)=F(1,J)
      IF(XIN-1.0) 220,217,220
C
C  CALCULATE PRESSURE FIELD IN INNER FLUID
C
  217 DO 105 J=1,N+1
      DO 105 I=1,MRI+1
  105 F(I,J)=0
      CALL PWSCYL(INTL,RIA,RIB,MRI,MBDCND1,BDA1,BDB1,ROC,SS,N,
     *NBDCND1,BDC,BDD,ELMDDA,F,IDIMF,PERTRB,IERROR,WW0)
      IF(IERROR.NE.0) WRITE(69,241) IERROR
      DO 219 J=1,N+1
      FS2(J)=FS1(J)
      FS2(J)=FS2(J)+0.5*(F(MRI+1,J)-FS2(J))
  215 FS1(J)=F(MRI+1,J)
  220 DO 270 J=1,N+1
      FS(J)=FS1(J)+FS2(J)
  270 FSS(J)=FS0(J)+FS1(J)
C
C CALCULATE PHI FROM EQ.(13) AND THE AVERAGE OF PHI OVER
C THE SHELL LENGTH, PHIAVG.  THE RUNNING AVERAGE OF PHIAVG, PHIRUNS,
C IS ALSO CALCULATED.
C
      PHISUM=0.
      XN1=0.
      XK1=WFAA/(WFASIGMA)
      CUTSUM=0.
      DO 271 I=2,N
      ACCA=ABSF(ACC(I))
  271 CUTSUM=CUTSUM+ACCA
      CUTOF=0.33*CUTSUM/(XN-1.0)
      DO 213 I=2,N
      ACCA=ABSF(ACC(I))
      IF(ACCA-CUTOF) 213,213,214
  214 PHI(I)=-XK1*FSS(I+1)/ACC(I)
      PHISUM=PHISUM + PHI(I)
      XNN=XNN+1.0
  213 CONTINUE
      IF(XNN-1.0) 26,216,216
  216 IF(PHISUM) 26,228,228
  223 PHIAVG=PHISUM/XNN
      PHIAVS=PHIAVS+PHIAVG
      PHIRUNS=PHIAVS/IT
C
C
C IF PRINTING IS REQUESTED IT IS DONE NOW AND STORED IN FILE OUTPT.
C
   26 IF(IT-IPRINT) 120,121,121
  121 CALL STRS
C
C INCREMENTING
C
  120 IT=IT+1
      TEE=TEE+TEPS
C
C CHECK TO SEE IF THE NEXT SPECIFIED PRESSURE OR LOAD NEEDS
C TO BE READ.  IF IT DOES IT IS READ IN HERE.
C
  843 IF(TEE-TLIMIT) 84,84,999
   84 IF(TEE-ETAU) 821,821,82
   82 DO 83 J=1,MQU
      EXL(J)=EXU(J)
   83 QL(J)=QU(J)
      MDL=MQU
      ETAL =ETAU
```

```
      IF(OMEGA.EQ.0.) 831,825
  831 INPUT DATA INP3,2,0
  825 IF(TEE-ETAUL) 65,65,822
  821 IF(TEE-ETAUL) 69,69,822
  822 DO 823 J=1,IPP
  823 FL(J)=FP(J)
      ETALL=ETAUL
      IF(OMEGAL.EQ.0.) 824,65
  824 INPUT DATA INP6,2,0
      GO TO 65
  997 FORMAT(1X,"BECAUSE OF STORAGE LIMITATIONS (TT1) THIS PROGRAM ONLY
     1RUNS IF N IS LESS THAN 301")
  996 WRITE (3,997)
C
C PRODUCE A PLOT FILE CALLED DXSHELVBXX.
C
  999 DO 950 I=1,3
      DO 950 J=1,4
      DO 930 K=1,NP
  930 ZL(K)=ZP(J,I,K)
      IF(J.EQ.1) 931,932
  931 ALABEL(24)=10HU
      GO TO 940
  932 IF(J.EQ.2) 933,934
  933 ALABEL(24)=10HV
      GO TO 940
  934 IF(J.EQ.3) 935,936
  935 ALABEL(24)=10HW
      GO TO 940
  936 IF(J.EQ.4) 937,940
  937 ALABEL(24)=10HW-XI
  940 IF(I.EQ.1) 941,942
  941 ALABEL(30)=10HQUARTER
      GO TO 950
  942 IF(I.EQ.2) 943,944
  943 ALABEL(30)=10HHALF
      GO TO 950
  944 IF(I.EQ.3) 945,950
  945 ALABEL(30)=10HTHREE QTRS
  950 CALL FPLOT(1,0,1,NP,ZL,TM)
      ALABEL(24)=10HACC
      ALABEL(30)=10HHALF
      CALL FPLOT (1,0,1,NP,ACCP,TM)
      ALABEL(24)=10HPHIAVG
      ALABEL(30)=10H
      CALL FPLOT (1,0,1,NP,PHIAVGP,TM)
      CALL EXIT()
      END
C
C
C
C*****************************************************************
C
C  SUBROUTINES USED BY SHELVIB
C
C*****************************************************************
C
C
C
C
C MABC--CALCULATES A,B,C,H,HJ MATRICES
      SUBROUTINE MABC
      USE DIMCOM
C     T IS K MATRIX
      T(1,1)=1.0/(1.0-GNU**2)
      T(1,2)=0.0
      T(1,3)=0.0
      T(1,4)=0.0
      T(2,1)=0.0
      T(2,2)=0.5*(1.0+ELS/16.0)/(1.0+GNU)
      T(2,3)=ELS*XEN/(8.0*(1.0+GNU))
      T(2,4)=0.0
      T(3,1)=0.0
      T(3,2)=T(2,3)
      T(3,3)=XEN*XEN*ELS/(6.0*(1.0+GNU))
      T(3,4)=ELS
      T(4,1)=0.0
      T(4,2)=0.0
      T(4,3)=-T(1,1)/12.0
      T(4,4)=0.0
C T1 IS F MATRIX
      T1(1,1)=0.0
      T1(1,2)=(XEN/2.0)*(1.0/(1.0-GNU)-ELS/(16.0*(1.0+GNU)))
      T1(1,3)=GNU*T(1,1)-T(2,3)/4.0
      T1(1,4)=0.0
      T1(2,1)=-T1(1,2)
      T1(2,2)=0.0
      T1(2,3)=0.0
      T1(2,4)=0.0
      T1(3,1)=-T1(1,3)
      T1(3,2)=0.0
      T1(3,3)=0.0
```

```
      T1(3,4)=0.0
      T1(4,1)=0.0
      T1(4,2)=0.0
      T1(4,3)=0.0
      T1(4,4)=0.0
C  CALCULATE A MATRIX
      CALL SCA(2.0/DELTA,T,P1)
      CALL ADD(P1,T1,A)
C  CALCULATE C MATRIX
      CALL SCA(-1.0,T1,T1)
      CALL ADD(T1,P1,C)
C CALCULATION OF T1 = EE MATRIX
      T1(1,1) = -XEN*XEN*(1.0+ELS/48.0)/(2.0*(1.0+GNU))-6.0/EPS**2
     1-(CDP)*(3.0/EPS)
      T1(1,2)=0.0
      T1(1,3)=0.0
      T1(1,4)=0.0
      T1(2,1)=0.0
      T1(2,2) = - XEN*XEN*(T(1,1)+ELS/12.0)-6.0/EPS**2
     1-(CDP)*3.0/EPS
      T1(2,3) = -XEN*(T(1,1)+XEN*XEN*ELS/12.0)
      T1(2,4)=-GNU*ELS*XEN
      T1(3,1)=0.0
      T1(3,2)=T1(2,3)
      T1(3,3)=-T(1,1)-ELS*(XEN**4)/12.0-6.0/EPS**2
     1-(CDP)*3.0/EPS
      T1(3,4)=-XEN*XEN*ELS*GNU
      T1(4,1)=0.0
      T1(4,2)=GNU*T(1,1)*XEN/12.0
      T1(4,3)=XEN*XEN*GNU*T(1,1)/12.0
      T1(4,4)=-1.0
C  CALCULATE B MATRIX
      CALL SCA(-2.0,P1,T)
      CALL SCA(2.0*DELTA,T1,P1)
      CALL ADD(T,P1,B)
C CALCULATION OF H AND HJ
      H(1,1)=1.0/(1.0-GNU*GNU)
      H(1,2)=0.0
      H(1,3)=0.0
      H(1,4)=0.0
      H(2,1)=0.0
      H(2,2)=(1.0+3.0*ELS/16.0)/(2.0*(1.0+GNU))
      H(2,3)=ELS*XEN/(8.0*(1.0+GNU))
      H(2,4)=0.0
      H(3,1)=0.0
      H(3,2)=H(2,3)
      H(3,3)=XEN*XEN*ELS/(6.0*(1.0+GNU))
      H(3,4)=ELS
      H(4,1)=0.0
      H(4,2)=0.0
      H(4,3)=-1.0
      H(4,4)=0.0
      HJ(1,1)=0.0
      HJ(1,2)=GNU*XEN*H(1,1)
      HJ(1,3)=GNU*H(1,1)
      HJ(1,4)=0.0
      HJ(1,4)=0.0
      HJ(2,1)=XEN*(-1.0+ELS/16.0)/(2.0*(1.0+GNU))
      HJ(2,2)=0.0
      HJ(2,3)=0.0
      HJ(2,4)=0.0
      HJ(3,1)=XEN*H(2,3)/3.0
      HJ(3,2)=0.0
      HJ(3,3)=0.0
      HJ(3,4)=0.0
      HJ(4,1)=0.0
      HJ(4,2)=0.0
      HJ(4,3)=0.0
      HJ(4,4)=0.0
  812 RETURN
      END
C*************************************************************
C STRS--WRITES OUT THE PERTINENT QUANTITIES:  CONTROL, INTER AND IPRINT
      SUBROUTINE STRS
      USE DIMCOM
C PRINTING Z
      IPRINT=IPRINT+IPRINO
      IP=IP+1
      TM(IP)=TEE
      PHIAVGP(IP)=PHIAVG
  212 FORMAT(///20X,26HNON-DIMENSIONAL Z AT TIME=E10.3,5H SECS)
      WRITE (3,212) TEE
  213 FORMAT(8H STATION,2X,6HS (IN),7X,1HU,12X,1HV,12X,1HW,10X,
     14HM-X1,6X,14HHYD LOAD (PSI),4X,3HACC,8X,9HPHI (IN.)/)
      WRITE (3,213)
  214 FORMAT(3X,1H0,7X,4H0.00,4E13.3)
      WRITE (3,214) (Z0(I),I=1,4)
      DO 220 J=INTER,N,INTER
      XI=J
```

```
      IF(XI.EQ.N14) 230,231
  231 IF(XI.EQ.N24) 232,233
  233 IF(XI.EQ.N34) 234,216
  230 DO 235 I=1,4
  235 ZP(I,1,IP)=Z(I,N14)
      GO TO 216
  232 DO 236 I=1,4
  236 ZP(I,2,IP)=Z(I,N24)
      ACCP(IP)=ACC(N24)
      GO TO 216
  234 DO 237 I=1,4
  237 ZP(I,3,IP)=Z(I,N34)
  216 ESS=XI*DELTA*AA
  215 FORMAT(I4,F11.2,7E13.3)
  220 WRITE (3,215) J,ESS,(Z(I,J),I=1,4),FSS(J+1),ACC(J),PHI(J)
  217 FORMAT(//10X,"AVERAGE PHI FOR THIS TIME STEP= ",E13.3,5X,
     1"RUNNING AVERAGE OF PHI= ",E13.3)
      WRITE (3,217) PHIAVG,PHIRUNS
  815 RETURN
      END
C*****************************************************
C SCA--MULTIPLY SCALAR SC TIMES A = B
      SUBROUTINE SCA(SC,A,B)
      DIMENSION A(4,4),B(4,4)
      DO 25 I=1,4
      DO 25 J=1,4
   25 B(I,J) = SC*A(I,J)
  810 RETURN
      END
C*****************************************************
C AB--MATRIX MULTIPLY A TIMES B = C
      SUBROUTINE AB(A,B,C)
      DIMENSION A(4,4),B(4,4),C(4,4)
      DO 11 I=1,4
      DO 11 J=1,4
      C(I,J) =0.0
      DO 11 K=1,4
   11 C(I,J)= C(I,J) + A(I,K)*B(K,J)
      RETURN
      END
      SUBROUTINE ADD(A,B,C)
      DIMENSION A(4,4),B(4,4),C(4,4)
      DO 12 I=1,4
      DO 12 J=1,4
   12 C(I,J)=A(I,J)+B(I,J)
  809 RETURN
      END
C*****************************************************
C AX--MATRIX MULTIPLY A(4,4) TIMES X(4)= Y(4)
      SUBROUTINE AX(A,X,Y)
      DIMENSION A(4,4),X(4),Y(4)
      DO 10 I=1,4
      Y(I)= 0.0
      DO 10 J=1,4
   10 Y(I)= Y(I) + A(I,J)*X(J)
  800 RETURN
      END
C*****************************************************
C AD--MATRIX ADD X(4) +Y(4) =Z(4)
      SUBROUTINE AD(X,Y,Z)
      DIMENSION X(4),Y(4),Z(4)
      DO 9 I=1,4
    9 Z(I)=X(I) +Y(I)
  801 RETURN
      END
C*****************************************************
C PQ--CHANGE P(I,J,K) TO Q(I,J)
      SUBROUTINE PQ(P,K,Q)
      DIMENSION P(4,4,500),Q(4,4)
      DO 27 I= 1,4
      DO 27 J= 1,4
   27 Q(I,J)=P(I,J,K)
  803 RETURN
      END
C*****************************************************
C QP--CHANGE Q(I,J) TO P(I,J,K)
      SUBROUTINE QP(Q,K,P)
      DIMENSION P(4,4,500),Q(4,4)
      DO 28 I=1,4
      DO 28 J=1,4
   28 P(I,J,K)=Q(I,J)
  804 RETURN
      END
C*****************************************************
C ZX--CHANGE Z(I,K) TO X(I)
      SUBROUTINE ZX(Z,K,X)
      DIMENSION Z(4,500),X(4)
      DO 30 I=1,4
   30 X(I)= Z(I,K)
  806 RETURN
      END
```

```
C*****************************************************
C SCX--MULTIPLY SCALAR SC TIMES X(4) = Y(4)
      SUBROUTINE SCX(SC,X,Y)
      DIMENSION X(4),Y(4)
      DO 26 I=1,4
   26 Y(I) =SC*X(I)
  802 RETURN
      END
C*****************************************************
C XZ--CHANGE X(I) TO Z(I,K)
      SUBROUTINE XZ(X,K,Z)
      DIMENSION Z(4,500),X(4)
      DO 29 I=1,4
   29 Z(I,K) = X(I)
  805 RETURN
      END
C*****************************************************************
C LINV1F--MATRIX INVERSION OF A(N,IA) TO AINV(N,IA)
C            REF: "THE IMSL LIBRARY,VOL.1", INTER. MATH. AND
C                 STATISTICAL LIBRARIES,INC. IMSL LIB3-002, (DEC 1972)
      SUBROUTINE LINV1F (A,N,IA,AINV,IDGT)
      DIMENSION          A(4,1),AINV(4,1),WKAREA(4)
      DATA               ZERO/0.0/,ONE/1.0/
      IER=0
      DO 10 I=1,N
         DO 5 J=1,N
            AINV(I,J) = ZERO
    5    CONTINUE
         AINV(I,I) = ONE
   10 CONTINUE
      CALL LEQT1F (A,N,N,IA,AINV,IDGT,WKAREA,IER)
      IF (IER .EQ. 0) GO TO 9005
 9000 CONTINUE
      CALL UERTST (IER,6HLINV1F)
 9005 RETURN
      END
      SUBROUTINE LEQT1F (A,M,N,IA,B,IDGT,WKAREA,IER)
      DIMENSION          A(IA,1),B(IA,1),WKAREA(1)
C                                          INITIALIZE IER
      IER=0
C                                          DECOMPOSE A
      CALL LUDATF (A,A,N,IA,IDGT,D1,D2,WKAREA,WKAREA,WA,IER)
      IF (IER .GT. 128) GO TO 9000
C                                          CALL ROUTINE LUELMF (FORWARD AND
C                                          BACKWARD SUBSTITUTIONS)
      DO 10 J=1,M
         CALL LUELMF (A,B(1,J),WKAREA,N,IA,B(1,J))
   10 CONTINUE
      IF (IER .EQ. 0) GO TO 9005
 9000 CONTINUE
      CALL UERTST (IER,6HLEQT1F)
 9005 RETURN
      END
      SUBROUTINE LUDATF (A,LU,N,IA,IDGT,D1,D2,IPVT,EQUIL,WA,IER)
      DIMENSION          A(IA,1),LU(IA,1),IPVT(1),EQUIL(1)
      REAL               LU
      DATA               ZERO,ONE,FOUR,SIXTN,SIXTH/0.0,1.,4.,16.,.0625/
C                                          INITIALIZATION
      IER = 0
      RN = N
      WREL = ZERO
      D1 = ONE
      D2 = ZERO
      BIGA = ZERO
      DO 10 I=1,N
         BIG = ZERO
         DO 5 J=1,N
            P = A(I,J)
            LU(I,J) = P
            P = ABS(P)
            IF (P .GT. BIG) BIG = P
    5    CONTINUE
         IF (BIG .GT. BIGA) BIGA = BIG
         IF (BIG .EQ. ZERO) GO TO 110
         EQUIL(I) = ONE/BIG
   10 CONTINUE
      DO 105 J=1,N
         JM1 = J-1
         IF (JM1 .LT. 1) GO TO 40
C                                          COMPUTE U(I,J), I=1,...,J-1
         DO 35 I=1,JM1
            SUM = LU(I,J)
            IM1 = I-1
            IF (IDGT .EQ. 0) GO TO 25
C                                          WITH ACCURACY TEST
            A1 = ABS(SUM)
            W1 = ZERO
            IF (IM1 .LT. 1) GO TO 20
            DO 15 K=1,IM1
```

```
1081                T = LU(I,K)*LU(K,J)
1082                SUM = SUM-T
1083                WI = WI+ABS(T)
1084     15       CONTINUE
1085              LU(I,J) = SUM
1086     20       WI = WI+ABS(SUM)
1087              IF (AI .EQ. ZERO) AI = BIGA
1088              TEST = WI/AI
1089              IF (TEST .GT. WREL) WREL = TEST
1090              GO TO 35
1091 C                                          WITHOUT ACCURACY
1092     25       IF (IM1 .LT. 1) GO TO 35
1093              DO 30 K=1,IM1
1094                SUM = SUM-LU(I,K)*LU(K,J)
1095     30       CONTINUE
1096              LU(I,J) = SUM
1097     35    CONTINUE
1098     40    P = ZERO
1099 C                                          COMPUTE U(J,J) AND L(I,J), I=J+1,...,
1100           DO 70 I=J,N
1101              SUM = LU(I,J)
1102              IF (IDGT .EQ. 0) GO TO 55
1103 C                                          WITH ACCURACY TEST
1104              AI = ABS(SUM)
1105              WI = ZERO
1106              IF (JM1 .LT. 1) GO TO 50
1107              DO 45 K=1,JM1
1108                T = LU(I,K)*LU(K,J)
1109                SUM = SUM-T
1110                WI = WI+ABS(T)
1111     45       CONTINUE
1112              LU(I,J) = SUM
1113     50       WI = WI+ABS(SUM)
1114              IF (AI .EQ. ZERO) AI = BIGA
1115              TEST = WI/AI
1116              IF (TEST .GT. WREL) WREL = TEST
1117              GO TO 65
1118 C                                          WITHOUT ACCURACY TEST
1119     55       IF (JM1 .LT. 1) GO TO 65
1120              DO 60 K=1,JM1
1121                SUM = SUM-LU(I,K)*LU(K,J)
1122     60       CONTINUE
1123              LU(I,J) = SUM
1124     65       Q = EQUIL(I)*ABS(SUM)
1125              IF (P .GE. Q) GO TO 70
1126              P = Q
1127              IMAX = I
1128     70    CONTINUE
1129 C                                          TEST FOR ALGORITHMIC SINGULARITY
1130           IF (RN+P .EQ. RN) GO TO 110
1131           IF (J .EQ. IMAX) GO TO 80
1132 C                                          INTERCHANGE ROWS J AND IMAX
1133           D1 = -D1
1134           DO 75 K=1,N
1135              P = LU(IMAX,K)
1136              LU(IMAX,K) = LU(J,K)
1137              LU(J,K) = P
1138     75    CONTINUE
1139           EQUIL(IMAX) = EQUIL(J)
1140     80    IPVT(J) = IMAX
1141           D1 = D1*LU(J,J)
1142     85    IF (ABS(D1) .LE. ONE) GO TO 90
1143           D1 = D1*SIXTH
1144           D2 = D2+FOUR
1145           GO TO 85
1146     90    IF (ABS(D1) .GE. SIXTH) GO TO 95
1147           D1 = D1*SIXTH
1148           D2 = D2-FOUR
1149           GO TO 90
1150     95    CONTINUE
1151           JP1 = J+1
1152           IF (JP1 .GT. N) GO TO 105
1153 C                                          DIVIDE BY PIVOT ELEMENT U(J,J)
1154           P = LU(J,J)
1155           DO 100 I=JP1,N
1156              LU(I,J) = LU(I,J)/P
1157    100    CONTINUE
1158    105 CONTINUE
1159 C                                          PERFORM ACCURACY TEST
1160        IF (IDGT .EQ. 0) GO TO 9005
1161        P = 3*N+3
1162        WA = P*WREL
1163        IF (WA+10.0**(-IDGT) .NE. WA) GO TO 9005
1164        IER = 34
1165        GO TO 9000
1166 C                                          ALGORITHMIC SINGULARITY
1167    110 IER = 129
1168        D1 = ZERO
```

```
      D2 = ZERO
 9000 CONTINUE
C                                          PRINT ERROR
      CALL UERTST(IER,6HLUDATF)
 9005 RETURN
      END
      SUBROUTINE LUELMF (A,B,IPVT,N,IA,X)
      DIMENSION          A(IA,1),B(1),IPVT(1),X(1)
C                                          SOLVE LY = B FOR Y
      DO 5 I=1,N
    5 X(I) = B(I)
      IW = 0
      DO 20 I=1,N
         IP = IPVT(I)
         SUM = X(IP)
         X(IP) = X(I)
         IF (IW .EQ. 0) GO TO 15
         IM1 = I-1
         DO 10 J=IW,IM1
            SUM = SUM-A(I,J)*X(J)
   10    CONTINUE
         GO TO 20
   15    IF (SUM .NE. 0.) IW = I
   20 X(I) = SUM                           SOLVE UX = Y FOR X
      DO 30 IB=1,N
         I = N+1-IB
         IP1 = I+1
         SUM = X(I)
         IF (IP1 .GT. N) GO TO 30
         DO 25 J=IP1,N
            SUM = SUM-A(I,J)*X(J)
   25    CONTINUE
   30 X(I) = SUM/A(I,I)
      RETURN
      END
      SUBROUTINE UERTST (IER,NAME)
      DIMENSION          ITYP(2,4),IBIT(4)
      INTEGER            WARN,WARF,TERM,PRINTR
      EQUIVALENCE        (IBIT(1),WARN),(IBIT(2),WARF),(IBIT(3),TERM)
      DATA     ITYP       /10HWARNING   ,10H          ,
     *                    10HWARNING(WI,10HTH FIX)    ,
     *                    10HTERMINAL  ,10H           ,
     *                    10HNON-DEFINE,10HD          /,
     *          IBIT     / 32,64,128,0/
C         PRINTR CONTROLS THE OUTPUT UNIT FOR ERROR
C         MESSAGES FROM UERTST. FOLLOWING WAS IN ORIGINAL.
      DATA                PRINTR/6LOUTPUT/
C         THE FOLLOWING IS COMPATIBLE WITH "PRINT" STATEMENT
      DATA                PRINTR/61/
C         USE THE FOLLOWING FOR TELETYPE OUTPUT.
      DATA                PRINTR/59/
C         USE THE FOLLOWING FOR STANDARD LLL UNIT 3.
      DATA                PRINTR/ 3/
C
      IER2=IER
      IF (IER2 .GE. WARN) GO TO 5
C                                          NON-DEFINED
      IER1=4
      GO TO 20
    5 IF (IER2 .LT. TERM) GO TO 10
C                                          TERMINAL
      IER1=3
      GO TO 20
   10 IF (IER2 .LT. WARF) GO TO 15
C                                          WARNING(WITH FIX)
      IER1=2
      GO TO 20
C                                          WARNING
   15 IER1=1
C                                          EXTRACT *N*
   20 IER2=IER2-IBIT(IER1)
C                                          PRINT ERROR MESSAGE
      WRITE (PRINTR,25) (ITYP(I,IER1),I=1,2),NAME,IER2,IER
   25 FORMAT(26H *** I M S L(UERTST) ***  ,2A10,4X,A6,4X,I2,
     1   8H (IER = ,I3,1H))
      RETURN
      END
C*********************************************************************
C FPLOTT--PLOTTING SUBROUTINE
      SUBROUTINE FPLOTT (IFR,IPL,IMAP,NTOT,ARAY,XP)
C
C   FPLOTT WILL CREATE A DD80 PLOTT FILE IN
C   WHICH NTOT POINTS OF ARAY ARE
C   PLOTTED VS. XP WITH LABELS
C   ALABEL(1)-ALABEL(30)
C   ALABEL(12,15,18,21) MAY BE NUMERIC
C   E15.6 FORMAT OR BLANK A10 FORMAT
C   THE REMAINING LABELS ARE ALL A10 FORMAT
C
C   IFR=1 CREATES A MAPPING PLUS A TRACE
C   IFR=2 CREATES ONLY A TRACE OF ARAY VS. XP
```

```
1261 C     IFR=0 SAME AS IFR=1 PLUS DD80 FILENAME
1262 C     IS WRITTEN OUT ON THE TTY
1263 C
1264 C     IMAP=1 CAUSES GRID MAPPING
1265 C     IMAP=0 CAUSES PLAIN MAPPING
1266 C
1267 C     IPL=0 TRACE A SIMPLE LINE
1268 C     IPL=1HA,1HB,1HC,1HD,1HE
1269 C     TRACE LINE WITH LETTER IDENTIFIER
1270 C
1271 C     CALLING PROGRAM MUST CONTAIN COMMON
1272 C     BLOCKS BLK AND GOPLOT AS WELL AS CALLS
1273 C     TO CRTID, KEEP80 AND PLOTE
1274 C
1275         DIMENSION ARAY(1),XP(1)
1276         BLANK=1OH
1277         USE DIMCOM
1278         M1=0
1279         M2=0
1280         YMAX=0.
1281         NT=NTOT-1
1282         IF(IFR.EQ.0) GO TO 1
1283         GO TO (2,4),IFR
1284       1 WRITE(59,10) IPLOT(1210)
1285       2 CALL FRAME
1286         IF(YMAX.EQ.0.) CALL AMINMX(ARAY,1,NTOT,1,YMIN,YMAX,M1,M2)
1287         SCALE=YMAX-YMIN
1288         YMIN=YMIN-.05*ABSF(SCALE)
1289         YMAX=YMAX+.13*ABSF(SCALE)
1290         XMIN=XP(1)
1291         XMAX=XP(NT)
1292         IF(IMAP.EQ.1) CALL MAPG(XMIN,XMAX,YMIN,YMAX,.11328,.99,.11328,.98)
1293         IF(IMAP.NE.1) CALL MAPS(XMIN,XMAX,YMIN,YMAX,.11328,.99,.11328,.98)
1294         CALL SETCH(14.,41.,1.0,1.0,0)
1295         WRITE(100,6) (ALABEL(L),L=1,3)
1296         CALL SETCH(14.,40.,1.0,1.0,0)
1297         WRITE(100,6) (ALABEL(L),L=4,6)
1298         CALL SETCH(14.,39.,1.0,1.0,0)
1299         WRITE(100,6) (ALABEL(L),L=7,9)
1300         CALL SETCH (45.,41.,1.0,1.0,0)
1301         IF(ALABEL(12).EQ.BLANK) WRITE(100,6) (ALABEL(L),L=10,12)
1302         IF(ALABEL(12).NE.BLANK) WRITE(100,7) (ALABEL(L),L=10,12)
1303         CALL SETCH (45.,40.,1.0,1.0,0)
1304         IF(ALABEL(15).EQ.BLANK) WRITE(100,6) (ALABEL(L),L=13,15)
1305         IF(ALABEL(15).NE.BLANK) WRITE(100,7) (ALABEL(L),L=13,15)
1306         CALL SETCH (45.,39.,1.0,1.0,0)
1307         IF(ALABEL(18).EQ.BLANK) WRITE(100,6) (ALABEL(L),L=16,18)
1308         IF(ALABEL(18).NE.BLANK) WRITE(100,7) (ALABEL(L),L=16,18)
1309         CALL SETCH(45.,38.,1.0,1.0,0)
1310         IF(ALABEL(21).EQ.BLANK) WRITE(100,6) (ALABEL(L),L=19,21)
1311         IF(ALABEL(21).NE.BLANK) WRITE(100,7) (ALABEL(L),L=19,21)
1312         CALL SETCH(30.,2.,1.0,2.0,0)
1313         WRITE(100,9) (ALABEL(L),L=22,23)
1314         CALL SETCH(2.,30.,1.0,2.1.0)
1315         WRITE(100,9) (ALABEL(L),L=24,25)
1316         CALL SETCH(14.,41.,1.0,2.0,0)
1317         WRITE(100,5) (ALABEL(L),L=26,30)
1318       4 CALL SETCRT (XP(1),ARAY(1),1,0)
1319         IF(IPL.EQ.1HA) CALL TRACEC(1HA,XP,ARAY,NT,1,1)
1320         IF(IPL.EQ.1HB) CALL TRACEC(1HB,XP,ARAY,NT,1,1)
1321         IF(IPL.EQ.1HC) CALL TRACEC(1HC,XP,ARAY,NT,1,1)
1322         IF(IPL.EQ.1HD) CALL TRACEC(1HD,XP,ARAY,NT,1,1)
1323         IF(IPL.EQ.1HE) CALL TRACEC(1HE,XP,ARAY,NT,1,1)
1324         IF(IPL.EQ.0) CALL TRACE (XP,ARAY,NT,1,1)
1325       5 FORMAT(5A10)
1326       6 FORMAT (3A10)
1327       7 FORMAT (2A10,E15.6)
1328       9 FORMAT(2A10)
1329      10 FORMAT("DD80 FILENAME IS "A10)
1330       8 RETURN
1331         END
1332 C*****************************************************************
1333 C PWSCYL--POISSON SOLVER IN CYLINDRICAL COORDINATES
1334 C              REF: SWATZRAUBER AND SWEET,"EFFICIENT FORTRAN SUBPROGRAM
1335 C                   FOR THE SOLUTION OF ELLIPTIC PARTIAL DIFFERENTIAL
1336 C                   EQUATIONS", NCAR-TN-1A-109, (JULY 1975)
1337         SUBROUTINE PWSCYL (INTL,A,B,M,MBDCND,BDA,BDB,C,D,N,NBDCND,BDC,
1338        1                   BDD,ELMBDA,F,IDIMF,PERTRB,IERROR,W)
1339         LCM (BDA),(BDB),(BDC),(BDD)
1340         OPTIMIZE
1341         DIMENSION F(IDIMF,1),BDA(1),BDB(1),BDC(1),BDD(1),W(1)
1342 C
1343 C       CHECK FOR INVALID PARAMETERS.
1344 C
1345         IERROR = 0
1346         IF (A .LT. 0.) IERROR = 1
1347         IF (A .GE. B) IERROR = 2
```

```
      IF (MBDCND.LE.0 .OR. MBDCND.GE.7) IERROR = 3
      IF (C .GE. D) IERROR = 4
      IF (NCHECK(N).GT.1 .OR. N.LE.2) IERROR = 5
      IF (NBDCND.LE.-1 .OR. NBDCND.GE.5) IERROR = 6
      IF (A.EQ.0. .AND. (MBDCND.EQ.3 .OR. MBDCND.EQ.4)) IERROR = 7
      IF (A.GT.0. .AND. MBDCND.GE.5) IERROR = 8
      IF (A.EQ.0. .AND. ELMBDA.NE.0. .AND. MBDCND.GE.5) IERROR = 9
      IF (IDIMF .LT. M+1) IERROR = 10
      IF (IERROR .NE. 0) RETURN
      MP1 = M+1
      DELTAR = (B-A)/FLOAT(M)
      DLRBY2 = DELTAR/2.
      DLRSQ = DELTAR**2
      NP1 = N+1
      DELTHT = (D-C)/FLOAT(N)
      DLTHSQ = DELTHT**2
      NP = NBDCND+1
C
C     DEFINE RANGE OF INDICES I AND J FOR UNKNOWNS U(I,J).
C
      MSTART = 2
      MSTOP = M
      GO TO ( 20, 15, 10,  5,  5, 10),MBDCND
    5 MSTART = 1
      GO TO  20
   10 MSTART = 1
   15 MSTOP = MP1
   20 MUNK = MSTOP-MSTART+1
      NSTART = 1
      NSTOP = N
      GO TO ( 40, 25, 30, 35, 40),NP
   25 NSTART = 2
      GO TO  40
   30 NSTART = 2
   35 NSTOP = NP1
   40 NUNK = NSTOP-NSTART+1
C
C     DEFINE A,B,C COEFFICIENTS IN W-ARRAY.
C
      ID1 = 6*NUNK+5*MUNK
      ID2 = ID1+MUNK
      ID3 = ID2+MUNK
      ID4 = ID3+MUNK
      ID5 = ID1-5*MUNK
      ID6 = ID5+MUNK
      ISTART = 1
      A1 = 2./DLRSQ
      IJ = 0
      IF (MBDCND.EQ.3 .OR. MBDCND.EQ.4) IJ = 1
      IF (MBDCND .LE. 4) GO TO  45
      W(ID1+1) = 0.
      W(ID2+1) = -2.*A1
      W(ID3+1) = 2.*A1
      ISTART = 2
      IJ = 1
   45 DO  50 I=ISTART,MUNK
         R = A+FLOAT(I-IJ)*DELTAR
         J = ID5+I
         W(J) = R
         J = ID6+I
         W(J) = 1./R**2
         J = ID1+I
         W(J) = (R-DLRBY2)/(R*DLRSQ)
         J = ID3+I
         W(J) = (R+DLRBY2)/(R*DLRSQ)
         K = ID6+I
         J = ID2+I
         W(J) = -A1+ELMBDA*W(K)
   50 CONTINUE
      GO TO ( 70, 55, 60, 65, 70, 60),MBDCND
   55 W(ID2) = A1
      GO TO  70
   60 W(ID2) = A1
   65 W(ID3+1) = A1*FLOAT(ISTART)
   70 CONTINUE
C
C     ENTER BOUNDARY DATA FOR R-BOUNDARIES.
C
      GO TO ( 75, 75, 85, 85, 95, 95),MBDCND
   75 A1 = W(ID1+1)
      DO  80 J=NSTART,NSTOP
         F(2,J) = F(2,J)-A1*F(1,J)
   80 CONTINUE
      GO TO  95
   85 A1 = 2.*DELTAR*W(ID1+1)
      DO  90 J=NSTART,NSTOP
         F(1,J) = F(1,J)+A1*BDA(J)
   90 CONTINUE
   95 GO TO (100,110,110,100,100,110),MBDCND
  100 A1 = W(ID4)
      DO 105 J=NSTART,NSTOP
         F(M,J) = F(M,J)-A1*F(MP1,J)
  105 CONTINUE
```

```
      GO TO 120
  110 A1 = 2.*DELTAR*W(ID4)
      DO 115 J=NSTART,NSTOP
         F(MP1,J) = F(MP1,J)-A1*BDB(J)
  115 CONTINUE
C
C     ENTER BOUNDARY DATA FOR Z-BOUNDARIES.
C
  120 A1 = 1./DLTHSQ
      L = ID5-MSTART+1
      LP = ID6-MSTART+1
      GO TO (170,125,125,135,135),NP
  125 DO 130 I=MSTART,MSTOP
         F(I,2) = F(I,2)+A1*F(I,1)
  130 CONTINUE
      GO TO 145
  135 A1 = 2./DELTHT
      DO 140 I=MSTART,MSTOP
         F(I,1) = F(I,1)+A1*BDC(I)
  140 CONTINUE
  145 A1 = 1./DLTHSQ
      GO TO (170,150,160,160,150),NP
  150 DO 155 I=MSTART,MSTOP
         F(I,N) = F(I,N)-A1*F(I,NP1)
  155 CONTINUE
      GO TO 170
  160 A1 = 2./DELTHT
      DO 165 I=MSTART,MSTOP
         F(I,NP1) = F(I,NP1)-A1*BDD(I)
  165 CONTINUE
  170 CONTINUE
C
C     ADJUST RIGHT SIDE OF SINGULAR PROBLEMS TO INSURE EXISTENCE OF A
C     SOLUTION.
C
      PERTRB = 0.
      IF (ELMBDA) 230,180,175
  175 IERROR = 11
      GO TO 230
  180 W(ID5+1) = .5*(W(ID5+2)-DLRBY2)
      GO TO (230,230,190,230,230,185),MBDCND
  185 W(ID5+1) = .5*W(ID5+1)
  190 GO TO (200,230,230,195,230),NP
  195 A2 = 2.
      GO TO 205
  200 A2 = 1.
  205 K = ID5+MUNK
      W(K) = .5*(W(K-1)+DLRBY2)
      S = 0.
      DO 215 I=MSTART,MSTOP
         S1 = 0.
         NSP1 = NSTART+1
         NSTM1 = NSTOP-1
         DO 210 J=NSP1,NSTM1
            S1 = S1+F(I,J)
  210    CONTINUE
         K = I+L
         S = S+(A2*S1+F(I,NSTART)+F(I,NSTOP))*W(K)
  215 CONTINUE
      S2 = FLOAT(M)*A+(.75+FLOAT((M-1)*(M+1)))*DLRBY2
      IF (MBDCND .EQ. 9) S2 = S2+.25*DLRBY2
      S1 = (2.*A2*FLOAT(NUNK-2))*S2
      PERTRB = S/S1
      DO 225 I=MSTART,MSTOP
         DO 220 J=NSTART,NSTOP
            F(I,J) = F(I,J)-PERTRB
  220    CONTINUE
  225 CONTINUE
  230 CONTINUE
C
C     MULTIPLY I-TH EQUATION THROUGH BY DELTHT**2 TO PUT EQUATION INTO
C     CORRECT FORM FOR SUBROUTINE POIS.
C
      DO 240 I=MSTART,MSTOP
         K = I-MSTART+1
         J = ID1+K
         W(J) = W(J)*DLTHSQ
         J = ID2+K
         W(J) = W(J)*DLTHSQ
         J = ID3+K
         W(J) = W(J)*DLTHSQ
         DO 235 J=NSTART,NSTOP
            F(I,J) = F(I,J)*DLTHSQ
  235    CONTINUE
  240 CONTINUE
      NPEROD = MBDCND
      IF (NPEROD .NE. 4) GO TO 260
C
```

```
C     REVERSE COLUMNS SO THE DERIVATIVE SPECIFIED-SOLUTION SPECIFIED
C     BOUNDARY CONDITIONS BECOME SOLUTION SPECIFIED-DERIVATIVE SPECIFIED
C
      NPEROD = 2
      ID5 = 1
      K = N/2
  245 DO 255 J=1,K
      L = N+1-J
      DO 250 I=MSTART,MSTOP
         S = F(I,L)
         F(I,L) = F(I,J)
         F(I,J) = S
  250    CONTINUE
  255 CONTINUE
      GO TO (260,280),ID5
C
C     CALL POIS TO SOLVE THE SYSTEM OF EQUATIONS.
C
  260 CALL POIS (INTL,NPEROD,NUNK,MBDCND,MUNK,W(ID1+1),W(ID2+1),
     1          W(ID3+1),IDIMF,F(MSTART,NSTART),IERR1,W)
      GO TO (270,280,280,280,265),NP
  265 ID5 = 2
      GO TO 245
  270 DO 275 I=MSTART,MSTOP
         F(I,NP1) = F(I,1)
  275 CONTINUE
  280 CONTINUE
      RETURN
      END
      FUNCTION NCHECK (N)
      OPTIMIZE
C
C     THIS SUBPROGRAM CHECKS THE FORM OF N.
C     IF N = 2**P, THEN NCHECK = 0.
C     IF N = (2**P)(3**Q)(5**Q), THEN NCHECK = 1.
C     OTHERWISE, NCHECK = 2.
C
      NP = N
    5 K = NP/2
      IF (2*K .NE. NP) GO TO  10
      NP = K
      GO TO   5
   10 IF (NP .NE. 1) GO TO  15
      NCHECK = 0
      RETURN
   15 K = NP/3
      IF (3*K .NE. NP) GO TO  20
      NP = K
      GO TO  15
   20 K = NP/5
      IF (5*K .NE. NP) GO TO  25
      NP = K
      GO TO  20
   25 IF (NP .NE. 1) GO TO  30
      NCHECK = 1
      RETURN
   30 NCHECK = 2
      RETURN
      END
      SUBROUTINE POIS (IFLG,NPEROD,N,MPEROD,M,A,B,C,IDIMY,Y,IERROR,W)
      OPTIMIZE
      EXTERNAL          TRID          ,TRIDP
      DIMENSION         Y(IDIMY,1)
      DIMENSION         W(1)          ,B(1)         ,A(1)         ,C(1)
      IERROR = 0
      IF (M .LE. 2) IERROR = 1
      I = NCHECK(NPEROD-2*((2*NPEROD)/3)+N)
      IF (N.LE.2 .OR. I.GT.1) IERROR = 2
      IF (IDIMY.LT.M)   IERROR = 3
      IF (NPEROD.LT.0 .OR. NPEROD.GT.3) IERROR = 4
      IF (IERROR .NE. 0) GO TO  25
      IWDIM1 = 6*N+1
      IWDIM2 = IWDIM1+M
      IWDIM3 = IWDIM2+M
      IWDIM4 = IWDIM3+M
      IWDIM5 = IWDIM4+M
      DO   5 I=1,M
         A(I) = -A(I)
         C(I) = -C(I)
         K = IWDIM5+I-1
         W(K) = -B(I)+2.
    5 CONTINUE
      IF (MPEROD .EQ. 0) GO TO  10
      CALL POISGN (NPEROD,N,IFLG,M,A,W(IWDIM5),C,IDIMY,Y,W(1),
     1             W(IWDIM1),W(IWDIM2),W(IWDIM3),W(IWDIM4),TRID)
      GO TO  15
   10 CALL POISGN (NPEROD,N,IFLG,M,A,W(IWDIM5),C,IDIMY,Y,W(1),
     1             W(IWDIM1),W(IWDIM2),W(IWDIM3),W(IWDIM4),TRIDP)
   15 DO  20 I=1,M
         A(I) = -A(I)
         C(I) = -C(I)
   20 CONTINUE
```

```
1621      25 RETURN
1622         END
1623         SUBROUTINE POISGN (NPEROD,N,IFLG,M,BA,BB,BC,IDIMQ,Q,TWOCOS,B,T,D,
1624        1                   W,TRI)
1625         OPTIMIZE
1626         DIMENSION        Q(IDIMQ,1)
1627         DIMENSION        BA(1)        ,BB(1)       ,BC(1)       ,TWOCOS(1)   ,
1628        1                 B(1)         ,T(1)        ,D(1)        ,W(1)
1629         IF (IFLG .NE. 0) GO TO   5
1630 C
1631 C       DO INITIALIZATION IF FIRST TIME THROUGH.
1632 C
1633         CALL POINIT (NPEROD,N,IEX2,IEX3,IEX5,N2PW,N2P3P,N2P3P5,KS3,KS5,
1634        1                 NPSTOP,TWOCOS)
1635       5 MM1 = M-1
1636         DO   20 J=1,N
1637            DO   10 I=1,M
1638               B(I) = -Q(I,J)
1639      10    CONTINUE
1640            CALL TRI (1,1,1,M,MM1,BA,BB,BC,B,TWOCOS,D,W)
1641            DO   15 I=1,M
1642               Q(I,J) = B(I)
1643      15    CONTINUE
1644      20 CONTINUE
1645         NP = 1
1646 C
1647 C       START REDUCTION FOR POWERS OF TWO
1648 C
1649         IF (IEX2 .EQ. 0) GO TO   60
1650         L = IEX2
1651         IF (IEX3+IEX5 .NE. 0) GO TO  25
1652         IF (NPEROD .EQ. 1) L = L-1
1653         IF (L .EQ. 0) GO TO 190
1654      25 DO   55 KOUNT=1,L
1655            K = NP
1656            NP = 2*NP
1657            K2 = NP-1
1658            K3 = NP
1659            K4 = 2*NP-1
1660            JSTART = NP
1661            IF (NPEROD .EQ. 3) JSTART = 1
1662            DO   50 J=JSTART,N,NP
1663               JM1 = J-K
1664               JP1 = J+K
1665               IF (J .EQ. 1) JM1 = JP1
1666               IF (J .NE. N) GO TO   30
1667               JP1 = JM1
1668               IF (NPEROD .EQ. 0) JP1 = K
1669      30       DO   35 I=1,M
1670                  B(I) = Q(I,JM1)+Q(I,JP1)
1671      35       CONTINUE
1672               CALL TRI (K,K2,1,M,MM1,BA,BB,BC,B,TWOCOS,D,W)
1673               DO   40 I=1,M
1674                  T(I) = Q(I,J)+B(I)
1675                  B(I) = T(I)
1676      40       CONTINUE
1677               CALL TRI (K3,K4,1,M,MM1,BA,BB,BC,B,TWOCOS,D,W)
1678               DO   45 I=1,M
1679                  Q(I,J) = T(I)+2.*B(I)
1680      45       CONTINUE
1681      50    CONTINUE
1682      55 CONTINUE
1683 C
1684 C       START REDUCTION FOR POWERS OF THREE
1685 C
1686      60 IF (IEX3 .EQ. 0) GO TO 120
1687         L = IEX3
1688         IF (IEX5 .NE. 0) GO TO   65
1689         IF (NPEROD .EQ. 1) L = L-1
1690         IF (L .EQ. 0) GO TO 190
1691      65 K2 = NP-1
1692         DO 115 KOUNT=1,L
1693            K = NP
1694            NP = 3*NP
1695            K1 = K2+1
1696            K2 = K2+K
1697            K3 = K2+1
1698            K4 = K2+NP
1699            JSTART = NP
1700            IF (NPEROD .EQ. 3) JSTART = 1
1701            DO 110 J=JSTART,N,NP
1702               IF (J .NE. 1) GO TO   70
1703               JM1 = J+K
1704               JM2 = JM1+K
1705               GO TO   80
1706      70       JM1 = J-K
1707               JM2 = JM1-K
1708               IF (J .NE. N) GO TO   80
1709               IF (NPEROD .EQ. 0) GO TO   75
1710               JP1 = JM1
```

```
1711              JP2 = JM2
1712              GO TO  85
1713     75       JP1 = K
1714              JP2 = JP1+K
1715              GO TO  85
1716     80       JP1 = J+K
1717              JP2 = JP1+K
1718     85       DO  90 I=1,M
1719                 B(I) = 2.*Q(I,J)+Q(I,JM2)+Q(I,JP2)
1720     90       CONTINUE
1721              CALL TRI (K1,K2,1,M,MM1,BA,BB,BC,B,TWOCOS,D,W)
1722              DO  95 I=1,M
1723                 T(I) = B(I)+Q(I,JM1)+Q(I,JP1)
1724                 B(I) = T(I)
1725     95       CONTINUE
1726              CALL TRI (K1,K2,1,M,MM1,BA,BB,BC,B,TWOCOS,D,W)
1727              DO 100 I=1,M
1728                 Q(I,J) = Q(I,J)+B(I)
1729                 B(I) = T(I)
1730    100       CONTINUE
1731              CALL TRI (K3,K4,1,M,MM1,BA,BB,BC,B,TWOCOS,D,W)
1732              DO 105 I=1,M
1733                 Q(I,J) = Q(I,J)+3.*B(I)
1734    105       CONTINUE
1735    110    CONTINUE
1736    115 CONTINUE
1737 C
1738 C       START REDUCTION FOR POWERS OF FIVE
1739 C
1740    120 L = IEX5
1741        IF (NPERDD .EQ. 1) L = L-1
1742        IF (L .LE. 0) GO TO 190
1743        K2 = (N2PW+N2P3P)/2-1
1744        DO 185 KOUNT=1,L
1745           K = NP
1746           NP = 5*NP
1747           K1 = K2+1
1748           K2 = K2+K
1749           K3 = K2+1
1750           K4 = K2+NP
1751           JSTART = NP
1752           IF (NPERDD .EQ. 3) JSTART = 1
1753           DO 180 J=JSTART,N,NP
1754              IF (J .NE. 1) GO TO 125
1755              JM1 = J+K
1756              JM2 = JM1+K
1757              JM3 = JM2+K
1758              JM4 = JM3+K
1759              GO TO 135
1760    125       JM1 = J-K
1761              JM2 = JM1-K
1762              JM3 = JM2-K
1763              JM4 = JM3-K
1764              IF (J .NE. N) GO TO 135
1765              IF (NPERDD .EQ. 0) GO TO 130
1766              JP1 = JM1
1767              JP2 = JM2
1768              JP3 = JM3
1769              JP4 = JM4
1770              GO TO 140
1771    130       JP1 = K
1772              JP2 = JP1+K
1773              JP3 = JP2+K
1774              JP4 = JP3+K
1775              GO TO 140
1776    135       JP1 = J+K
1777              JP2 = JP1+K
1778              JP3 = JP2+K
1779              JP4 = JP3+K
1780    140       DO 145 I=1,M
1781                 B(I) = 6.*Q(I,J)+4.*(Q(I,JM2)+Q(I,JP2))+Q(I,JM4)+Q(I,JP4)
1782    145       CONTINUE
1783              CALL TRI (K1,K2,1,M,MM1,BA,BB,BC,B,TWOCOS,D,W)
1784              DO 150 I=1,M
1785                 B(I) = B(I)+3.*(Q(I,JM1)+Q(I,JP1))+Q(I,JM3)+Q(I,JP3)
1786    150       CONTINUE
1787              CALL TRI (K1,K2,1,M,MM1,BA,BB,BC,B,TWOCOS,D,W)
1788              DO 155 I=1,M
1789                 T(I) = B(I)
1790                 B(I) = 2.*Q(I,J)+Q(I,JM2)+Q(I,JP2)+B(I)
1791    155       CONTINUE
1792              CALL TRI (K1,K2,1,M,MM1,BA,BB,BC,B,TWOCOS,D,W)
1793              DO 160 I=1,M
1794                 B(I) = B(I)+Q(I,JM1)+Q(I,JP1)
1795    160       CONTINUE
1796              CALL TRI (K1,K2,1,M,MM1,BA,BB,BC,B,TWOCOS,D,W)
1797              DO 165 I=1,M
1798                 TEMP = B(I)+Q(I,J)
1799                 B(I) = 4.*Q(I,J)+3.*(Q(I,JM2)+Q(I,JP2))+Q(I,JM4)+
1800       1                 Q(I,JP4)-T(I)
```

```
1801                Q(I,J) = TEMP
1802   165        CONTINUE
1803              CALL TRI (K1,K2,1,M,MM1,BA,BB,BC,B,TWOCOS,D,W)
1804              DO 170 I=1,M
1805                B(I) = B(I)+2.*(Q(I,JM1)+Q(I,JP1))+Q(I,JM3)+Q(I,JP3)
1806   170        CONTINUE
1807              CALL TRI (K3,K4,1,M,MM1,BA,BB,BC,B,TWOCOS,D,W)
1808              DO 175 I=1,M
1809                Q(I,J) = Q(I,J)+5.*B(I)
1810   175        CONTINUE
1811   180     CONTINUE
1812   185 CONTINUE
1813 C
1814 C       INITIAL PHASE OF BACK SUBSTITUTION
1815 C
1816   190 IF (NPEROD.EQ.1 .OR. NPEROD.EQ.2) GO TO 235
1817       IF (NPEROD .EQ. 0) GO TO 205
1818       DO 195 I=1,M
1819         B(I) = 2.*Q(I,1)
1820   195 CONTINUE
1821       CALL TRI (K3,K4,1,M,MM1,BA,BB,BC,B,TWOCOS,D,W)
1822       DO 200 I=1,M
1823         Q(I,N) = Q(I,N)+B(I)
1824         B(I) = 4.*Q(I,N)
1825   200 CONTINUE
1826       CALL TRI (K4+1,K4+2*NP-1,2,M,MM1,BA,BB,BC,B,TWOCOS,D,W)
1827       GO TO 215
1828   205 DO 210 I=1,M
1829         B(I) = 2.*Q(I,N)
1830   210 CONTINUE
1831       CALL TRI (K4+1,K4+NP-1,2,M,MM1,BA,BB,BC,B,TWOCOS,D,W)
1832   215 DO 220 I=1,M
1833         Q(I,N) = Q(I,N)+B(I)
1834   220 CONTINUE
1835       IF (NPEROD .EQ. 0) GO TO 235
1836       DO 225 I=1,M
1837         B(I) = 2.*Q(I,N)
1838   225 CONTINUE
1839       CALL TRI (K3,K4,1,M,MM1,BA,BB,BC,B,TWOCOS,D,W)
1840       DO 230 I=1,M
1841         Q(I,1) = Q(I,1)+B(I)
1842   230 CONTINUE
1843 C
1844 C       REGULAR BACK SUBSTITUTION FOR POWERS OF FIVE
1845 C
1846   235 CONTINUE
1847       IF (IEX5 .EQ. 0) GO TO 355
1848       NP = N2P3P5
1849       K8 = KS5
1850       IF (NPEROD .EQ. 1) K3 = K3+NP/5
1851       DO 350 KOUNT=1,IEX5
1852         K = NP
1853         NP = NP/5
1854         K4 = K3-1
1855         K3 = K3-NP
1856         K1 = K8+1
1857         K2 = K8+2*NP
1858         K5 = K2+1
1859         K6 = K2+4*NP
1860         K7 = K6+1
1861         K8 = K6+2*NP
1862         JSTART = NP
1863         IF (NPEROD .EQ. 3) JSTART = 1+NP
1864         DO 345 J=JSTART,N,K
1865           JM1 = J-NP
1866           JP1 = J+NP
1867           JP2 = JP1+NP
1868           JP3 = JP2+NP
1869           JP4 = JP3+NP
1870           IF (JM1 .NE. 0) GO TO 255
1871           IF (NPEROD .EQ. 0) GO TO 245
1872           DO 240 I=1,M
1873             B(I) = Q(I,JP1)
1874   240     CONTINUE
1875           GO TO 265
1876   245     DO 250 I=1,M
1877             B(I) = Q(I,JP1)+Q(I,N)
1878   250     CONTINUE
1879           GO TO 265
1880   255     DO 260 I=1,M
1881             B(I) = Q(I,JP1)+Q(I,JM1)
1882   260     CONTINUE
1883   265     CALL TRI (K3,K4,1,M,MM1,BA,BB,BC,B,TWOCOS,D,W)
1884           DO 270 I=1,M
1885             Q(I,J) = Q(I,J)+B(I)
```

```
1886                B(I) = Q(I,JP1)+Q(I,JP3)
1887   270        CONTINUE
1888              CALL TRI (K3,K4,1,M,MM1,BA,BB,BC,B,TWOCOS,D,W)
1889              DO 275 I=1,M
1890                Q(I,JP2) = Q(I,JP2)+B(I)
1891   275        CONTINUE
1892              IF (JP4 .GT. N) GO TO 285
1893              DO 280 I=1,M
1894                B(I) = 2.*Q(I,JP2)+Q(I,J)+Q(I,JP4)
1895   280        CONTINUE
1896              GO TO 295
1897   285        DO 290 I=1,M
1898                B(I) = 2.*Q(I,JP2)+Q(I,J)
1899   290        CONTINUE
1900   295        CALL TRI (K1,K2,1,M,MM1,BA,BB,BC,B,TWOCOS,D,W)
1901              DO 300 I=1,M
1902                Q(I,JP2) = Q(I,JP2)+B(I)
1903                B(I) = Q(I,JP2)+Q(I,J)
1904   300        CONTINUE
1905              CALL TRI (K5,K6,1,M,MM1,BA,BB,BC,B,TWOCOS,D,W)
1906              DO 305 I=1,M
1907                Q(I,JP2) = Q(I,JP2)+B(I)
1908                B(I) = Q(I,J)+Q(I,JP2)
1909   305        CONTINUE
1910              CALL TRI (K7,K8,1,M,MM1,BA,BB,BC,B,TWOCOS,D,W)
1911              DO 310 I=1,M
1912                Q(I,J) = Q(I,J)+B(I)
1913                B(I) = Q(I,J)+Q(I,JP2)
1914   310        CONTINUE
1915              CALL TRI (K3,K4,1,M,MM1,BA,BB,BC,B,TWOCOS,D,W)
1916              DO 315 I=1,M
1917                Q(I,JP1) = Q(I,JP1)+B(I)
1918   315        CONTINUE
1919              IF (JP4 .GT. N) GO TO 325
1920              DO 320 I=1,M
1921                B(I) = Q(I,JP2)+Q(I,JP4)
1922   320        CONTINUE
1923              GO TO 335
1924   325        DO 330 I=1,M
1925                B(I) = Q(I,JP2)
1926   330        CONTINUE
1927   335        CALL TRI (K3,K4,1,M,MM1,BA,BB,BC,B,TWOCOS,D,W)
1928              DO 340 I=1,M
1929                Q(I,JP3) = Q(I,JP3)+B(I)
1930   340        CONTINUE
1931   345      CONTINUE
1932   350 CONTINUE
1933 C
1934 C       REGULAR BACK SUBSTITUTION FOR POWERS OF THREE
1935 C
1936   355 IF (IEX3 .EQ. 0) GO TO 455
1937       NP = N2P3P
1938       K2 = KS3
1939       IF (NPEROD.EQ.1 .AND. IEX5.EQ.0) K3 = K3+NP/3
1940       DO 450 KOUNT=1,IEX3
1941          K = NP
1942          NP = NP/3
1943          K4 = K3-1
1944          K3 = K3-NP
1945          K1 = K2+1
1946          K2 = K2+2*NP
1947          JSTART = NP
1948          IF (NPEROD .EQ. 3) JSTART = NP+1
1949          DO 445 J=JSTART,N,K
1950             JM1 = J-NP
1951             JP1 = J+NP
1952             JP2 = JP1+NP
1953             IF (JM1 .EQ. 0) GO TO 365
1954             DO 360 I=1,M
1955                B(I) = Q(I,JP1)+Q(I,JM1)
1956   360       CONTINUE
1957             GO TO 385
1958   365       IF (NPEROD .EQ. 0) GO TO 375
1959             DO 370 I=1,M
1960                B(I) = Q(I,JP1)
1961   370       CONTINUE
1962             GO TO 385
1963   375       DO 380 I=1,M
1964                B(I) = Q(I,JP1)+Q(I,N)
1965   380       CONTINUE
1966   385       CALL TRI (K3,K4,1,M,MM1,BA,BB,BC,B,TWOCOS,D,W)
1967             DO 390 I=1,M
1968                Q(I,J) = Q(I,J)+B(I)
1969   390       CONTINUE
1970             IF (JP2 .GT. N) GO TO 400
1971             DO 395 I=1,M
1972                B(I) = Q(I,J)+Q(I,JP2)
1973   395       CONTINUE
1974             GO TO 410
1975   400       DO 405 I=1,M
1976                B(I) = Q(I,J)
1977   405       CONTINUE
1978   410       CALL TRI (K1,K2,1,M,MM1,BA,BB,BC,B,TWOCOS,D,W)
1979             DO 415 I=1,M
1980                Q(I,J) = Q(I,J)+B(I)
```

```
1981    415         CONTINUE
1982                IF (JP2 .GT. N) GO TO 425
1983                DO 420 I=1,M
1984                   B(I) = Q(I,J)+Q(I,JP2)
1985    420         CONTINUE
1986                GO TO 435
1987    425         DO 430 I=1,M
1988                   B(I) = Q(I,J)
1989    430         CONTINUE
1990    435         CALL TRI (K3,K4,1,M,MM1,BA,BB,BC,B,TWOCOS,D,W)
1991                DO 440 I=1,M
1992                   Q(I,JP1) = Q(I,JP1)+B(I)
1993    440         CONTINUE
1994    445      CONTINUE
1995    450 CONTINUE
1996 C
1997 C      REGULAR BACK SUBSTITUTION FOR POWERS OF TWO
1998 C
1999    455 IF (IEX2 .EQ. 0) GO TO 510
2000        NP = N2PW
2001        DO 505 KOUNT=1,IEX2
2002           K = NP
2003           NP = NP/2
2004           K3 = K-1
2005           JSTART = NP
2006           IF (NPEROD .EQ. 3) JSTART = 1+NP
2007           DO 500 J=JSTART,N,K
2008              JM1 = J-NP
2009              JP1 = J+NP
2010              IF (JM1 .NE. 0) GO TO 470
2011              IF (JP1 .GT. N) GO TO 500
2012              IF (NPEROD.EQ.1 .OR. NPEROD.EQ.2) GO TO 460
2013              JM1 = N
2014              GO TO 480
2015    460       DO 465 I=1,M
2016                 B(I) = Q(I,JP1)
2017    465       CONTINUE
2018              GO TO 490
2019    470       IF (JP1 .LE. N) GO TO 480
2020              DO 475 I=1,M
2021                 B(I) = Q(I,JM1)
2022    475       CONTINUE
2023              GO TO 490
2024    480       DO 485 I=1,M
2025                 B(I) = Q(I,JM1)+Q(I,JP1)
2026    485       CONTINUE
2027    490       CALL TRI (NP,K3,1,M,MM1,BA,BB,BC,B,TWOCOS,D,W)
2028              DO 495 I=1,M
2029                 Q(I,J) = Q(I,J)+B(I)
2030    495       CONTINUE
2031    500    CONTINUE
2032    505 CONTINUE
2033    510 RETURN
2034        END
2035        SUBROUTINE POINIT (NPEROD,N,IEX2,IEX3,IEX5,N2PW,N2P3P,N2P3P5,KS3,
2036       1                   KS5,NPSTOP,TWOCOS)
2037        OPTIMIZE
2038        DIMENSION       TWOCOS(1)
2039 C
2040 C      PARAMETER NPSTOP IS NOT USED IN THIS SUBROUTINE.
2041 C
2042 C
2043 C      MACHINE DEPENDENT CONSTANT
2044 C
2045 C      PI=3.14159265358979323846264338327950288419716939937510582097494 46
2046 C
2047        PI = 3.14159265358979
2048 C
2049 C      COMPUTE EXPONENTS OF 2,3, AND 5 IN N.
2050 C
2051        NP = N
2052        IF (NPEROD .EQ. 1) NP = NP+1
2053        IF (NPEROD .EQ. 3) NP = NP-1
2054        IEX2 = 0
2055      5 K = NP/2
2056        IF (2*K .NE. NP) GO TO  10
2057        IEX2 = IEX2+1
2058        NP = K
2059        GO TO   5
2060     10 IEX3 = 0
2061     15 K = NP/3
2062        IF (3*K .NE. NP) GO TO  20
2063        IEX3 = IEX3+1
2064        NP = K
2065        GO TO  15
2066     20 IEX5 = 0
2067     25 K = NP/5
```

```
2068        IF (5*K .NE. NP) GO TO  30
2069        IEX5 = IEX5+1
2070        NP = K
2071        GO TO  25
2072     30 CONTINUE
2073        N2PW = 2**IEX2
2074        N2P3P = N2PW*(3**IEX3)
2075        N2P3P5 = N2P3P*(5**IEX5)
2076 C
2077 C      COMPUTE NECESSARY VALUES OF 2*COS(X)
2078 C
2079        NP = 1
2080        TWOCOS(1) = 0.
2081        K = 1
2082        IF (IEX2 .EQ. 0) GO TO  50
2083        L = IEX2
2084        IF (IEX3+IEX5 .NE. 0) GO TO  35
2085        IF (NPEROD .EQ. 1) L = L-1
2086        IF (L .EQ. 0) GO TO 145
2087     35 DO  45 KOUNT=1,L
2088           NP = 2*NP
2089           DO  40 I=1,NP
2090              J = K+I
2091              TWOCOS(J) = 2.*COS((FLOAT(I)-.5)*PI/FLOAT(NP))
2092     40    CONTINUE
2093           K = K+NP
2094     45 CONTINUE
2095     50 IF (IEX3 .EQ. 0) GO TO  70
2096        L = IEX3
2097        IF (IEX5 .NE. 0) GO TO  55
2098        IF (NPEROD .EQ. 1) L = L-1
2099        IF (L .EQ. 0) GO TO  85
2100     55 DO  65 KOUNT=1,L
2101           NP = 3*NP
2102           DO  60 I=1,NP
2103              J = K+I
2104              TWOCOS(J) = 2.*COS((FLOAT(I)-.5)*PI/FLOAT(NP))
2105     60    CONTINUE
2106           K = K+NP
2107     65 CONTINUE
2108     70 L = IEX5
2109        IF (NPEROD .EQ. 1) L = L-1
2110        IF (L .LE. 0) GO TO  85
2111        DO  80 KOUNT=1,L
2112           NP = 5*NP
2113           DO  75 I=1,NP
2114              J = K+I
2115              TWOCOS(J) = 2.*COS((FLOAT(I)-.5)*PI/FLOAT(NP))
2116     75    CONTINUE
2117           K = K+NP
2118     80 CONTINUE
2119     85 IF (NPEROD.EQ.1 .OR. NPEROD.EQ.2) GO TO 105
2120        IF (NPEROD .EQ. 0) GO TO  95
2121        NPT2 = 2*NP
2122        DO  90 I=1,NPT2
2123           J = K+I
2124           TWOCOS(J) = 2.*COS(FLOAT(I)*PI/FLOAT(NP))
2125     90 CONTINUE
2126        K = K+NPT2
2127        GO TO 105
2128     95 DO 100 I=1,NP
2129           J = K+I
2130           TWOCOS(J) = 2.*COS(2.*FLOAT(I)*PI/FLOAT(NP))
2131    100 CONTINUE
2132        K = K+NP
2133    105 NP = N2P3P5
2134        IF (IEX5 .EQ. 0) GO TO 130
2135        KS5 = K
2136        DO 125 KOUNT=1,IEX5
2137           NP = NP/5
2138           NPT2 = 2*NP
2139           DO 110 I=1,NPT2
2140              J = K+I
2141              TWOCOS(J) = 2.*COS((FLOAT(I)-.5)*PI/FLOAT(NPT2))
2142    110    CONTINUE
2143           K = K+NPT2
2144           DO 115 I=1,NP
2145              J = K+4*I
2146              TWOCOS(J-3) = 2.*COS((FLOAT(I)-.8)*PI/FLOAT(NP))
2147              TWOCOS(J-2) = 2.*COS((FLOAT(I)-.6)*PI/FLOAT(NP))
2148              TWOCOS(J-1) = 2.*COS((FLOAT(I)-.4)*PI/FLOAT(NP))
2149              TWOCOS(J) = 2.*COS((FLOAT(I)-.2)*PI/FLOAT(NP))
2150    115    CONTINUE
2151           K = K+4*NP
2152           DO 120 I=1,NP
2153              J = K+2*I
2154              TWOCOS(J-1) = 2.*COS(FLOAT(3*I-2)*PI/FLOAT(3*NP))
2155              TWOCOS(J) = 2.*COS(FLOAT(3*I-1)*PI/FLOAT(3*NP))
2156    120    CONTINUE
2157           K = K+2*NP
2158    125 CONTINUE
2159    130 IF (IEX3 .EQ. 0) GO TO 145
2160        KS3 = K
```

```
      DO 140 KOUNT=1,IEX3
         NP = NP/3
         DO 135 I=1,NP
            J = K+2*I
            TWOCOS(J-1) = 2.*COS(FLOAT(3*I-2)*PI/FLOAT(3*NP))
            TWOCOS(J) = 2.*COS(FLOAT(3*I-1)*PI/FLOAT(3*NP))
  135    CONTINUE
         K = K+2*NP
  140 CONTINUE
  145 RETURN
      END
      SUBROUTINE TRID (KSTART,KSTOP,ISING,M,MM1,A,B,C,Y,TWOCOS,D,W)
      OPTIMIZE
      DIMENSION        A(1)        ,B(1)        ,C(1)        ,Y(1)        ,
     1                 TWOCOS(1)   ,D(1)        ,W(1)
C
C     SUBROUTINE TO SOLVE TRIDIAGONAL SYSTEMS
C
C
C     PARAMETER W NOT USED IN THIS SUBROUTINE.
C
      DO  15 K=KSTART,KSTOP
         X = -TWOCOS(K)
         D(1) = C(1)/(B(1)+X)
         Y(1) = Y(1)/(B(1)+X)
         DO    5 I=2,M
            Z = B(I)+X-A(I)*D(I-1)
            D(I) = C(I)/Z
            Y(I) = (Y(I)-A(I)*Y(I-1))/Z
    5    CONTINUE
         DO  10 IP=1,MM1
            I = M-IP
            Y(I) = Y(I)-D(I)*Y(I+1)
   10    CONTINUE
   15 CONTINUE
      IF (ISING .EQ. 1) RETURN
      D(1) = C(1)/(B(1)-2.)
      Y(1) = Y(1)/(B(1)-2.)
      DO  20 I=2,MM1
         Z = B(I)-2.-A(I)*D(I-1)
         D(I) = C(I)/Z
         Y(I) = (Y(I)-A(I)*Y(I-1))/Z
   20 CONTINUE
      Z = B(M)-2.-A(M)*D(M-1)
      X = Y(M)-A(M)*Y(M-1)
      IF (Z .NE. 0.) GO TO  25
      Y(M) = 0.
      GO TO  30
   25 Y(M) = X/Z
   30 DO  35 IP=1,MM1
         I = M-IP
         Y(I) = Y(I)-D(I)*Y(I+1)
   35 CONTINUE
      RETURN
      END
      SUBROUTINE TRIDP (KSTART,KSTOP,ISING,M,MM1,A,B,C,Y,TWOCOS,D,W)
      OPTIMIZE
      DIMENSION        A(1)        ,B(1)        ,C(1)        ,Y(1)
     1                 TWOCOS(1)   ,D(1)        ,W(1)
C
C     SUBROUTINE TO SOLVE PERIODIC TRIDIAGONAL SYSTEM
C
      DO  15 K=KSTART,KSTOP
         X = -TWOCOS(K)
         D(1) = C(1)/(B(1)+X)
         W(1) = A(1)/(B(1)+X)
         Y(1) = Y(1)/(B(1)+X)
         BM = B(M)
         Z = C(M)
         DO    5 I=2,MM1
            DEN = B(I)+X-A(I)*D(I-1)
            D(I) = C(I)/DEN
            W(I) = -A(I)*W(I-1)/DEN
            Y(I) = (Y(I)-A(I)*Y(I-1))/DEN
            Y(M) = Y(M)-Z*Y(I-1)
            BM = BM-Z*W(I-1)
            Z = -Z*D(I-1)
    5    CONTINUE
         D(MM1) = D(MM1)+W(MM1)
         Z = A(M)+Z
         DEN = BM+X-Z*D(MM1)
         Y(M) = Y(M)-Z*Y(M-1)
         Y(M) = Y(M)/DEN
         Y(MM1) = Y(MM1)-D(MM1)*Y(M)
         DO  10 IP=2,MM1
            I = M-IP
            Y(I) = Y(I)-D(I)*Y(I+1)-W(I)*Y(M)
   10    CONTINUE
   15 CONTINUE
      IF (ISING .EQ. 1) RETURN
      D(1) = C(1)/(B(1)-2.)
      W(1) = A(1)/(B(1)-2.)
```

```
      Y(1) = Y(1)/(B(1)-2.)
      BM = B(M)
      Z = C(M)
      DO  20 I=2,MM1
         DEN = B(I)-2.-A(I)*D(I-1)
         D(I) = C(I)/DEN
         W(I) = -A(I)*W(I-1)/DEN
         Y(I) = (Y(I)-A(I)*Y(I-1))/DEN
         Y(M) = Y(M)-Z*Y(I-1)
         BM = BM-Z*W(I-1)
         Z = -Z*D(I-1)
   20 CONTINUE
      D(MM1) = D(MM1)+W(MM1)
      Z = A(M)+Z
      DEN = BM-2.-Z*D(MM1)
      Y(M) = Y(M)-Z*Y(M-1)
      IF (DEN .NE. 0.) GO TO  25
      Y(M) = 0.
      GO TO  30
   25 Y(M) = Y(M)/DEN
   30 Y(MM1) = Y(MM1)-D(MM1)*Y(M)
      DO  35 IP=2,MM1
         I = M-IP
         Y(I) = Y(I)-D(I)*Y(I+1)-W(I)*Y(M)
   35 CONTINUE
      RETURN
      END
C*****************************************************************
C DEC AND SOL PROVIDE A MORE RAPID MATRIX INVERSION CAPABILITY
C   REF  HINDMARSH, ET.AL. "DEC/SOL: SOLUTION OF DENSE SYSTEMS OF LINEAR
C        ALGEBRAIC EQUATIONS, UCID-30137, LAWRENCE LIVERMORE LABORATORY,
C        LIVERMORE,CA.  (JUN 1976)
      SUBROUTINE DEC (N, NDIM, A, IP, IER)
C
C
C  THE FOLLOWING CARD IS FOR OPTIMIZED COMPILATION UNDER CHAT.
      OPTIMIZE
C
      DIMENSION A(NDIM,N), IP(N)
C
      IER = 0
      IF (N .EQ. 1) GO TO 70
      NM1 = N - 1
      DO 60 K = 1,NM1
         KP1 = K + 1
C  FIND THE PIVOT IN COLUMN K.  SEARCH ROWS K TO N.
         M = K
         DO 10 I = KP1,N
 10         IF (ABS(A(I,K)) .GT. ABS(A(M,K))) M = I
         IP(K) = M
C  INTERCHANGE ELEMENTS IN ROWS K AND M.
         T = A(M,K)
         IF (M .EQ. K) GO TO 20
         A(M,K) = A(K,K)
         A(K,K) = T
 20      IF (T .EQ. 0.) GO TO 80
C  STORE MULTIPLIERS IN A(I,K), I = K+1,...,N.
         T = 1./T
         DO 30 I = KP1,N
 30         A(I,K) = -A(I,K)*T
C  APPLY MULTIPLIERS TO OTHER COLUMNS OF A.
         DO 50 J = KP1,N
            T = A(M,J)
            A(M,J) = A(K,J)
            A(K,J) = T
            IF (T .EQ. 0.) GO TO 50
            DO 40 I = KP1,N
 40            A(I,J) = A(I,J) + A(I,K)*T
 50         CONTINUE
 60      CONTINUE
 70   K = N
      IF (A(N,N) .EQ. 0.) GO TO 80
      RETURN
 80   IER = K
      RETURN
C END OF SUBROUTINE DEC
      END
C
C
      SUBROUTINE SOL (N, NDIM, A, B, IP)
C
C  THE FOLLOWING CARD IS FOR OPTIMIZED COMPILATION UNDER CHAT.
      OPTIMIZE
C
      DIMENSION A(NDIM,N), B(N), IP(N)
C
C  SOLUTION OF LINEAR SYSTEM A*X = B USING OUTPUT OF DEC.
C  INPUT..
```

```
C       N = ORDER OF MATRIX.
C       NDIM = DECLARED FIRST DIMENSION OF ARRAY  A.
C       A = TRIANGULARIZED MATRIX OBTAINED FROM DEC.
C       B = RIGHT HAND SIDE VECTOR.
C       IP = PIVOT INFORMATION VECTOR OBTAINED FROM DEC.
C  DO NOT USE IF DEC HAS SET IER .NE. 0.
C  OUTPUT.
C       B = SOLUTION VECTOR, X .
C
        IF (N .EQ. 1) GO TO 50
        NM1 = N - 1
C  APPLY ROW PERMUTATIONS AND MULTIPLIERS TO B.
        DO 20 K = 1,NM1
          KP1 = K + 1
          M = IP(K)
          T = B(M)
          B(M) = B(K)
          B(K) = T
          DO 10 I = KP1,N
10          B(I) = B(I) + A(I,K)*T
20      CONTINUE
C  BACK SOLVE.
        DO 40 KB = 1,NM1
          KM1 = N - KB
          K = KM1 + 1
          B(K) = B(K)/A(K,K)
          T = -B(K)
          DO 30 I = 1,KM1
30          B(I) = B(I) + A(I,K)*T
40      CONTINUE
50    B(1) = B(1)/A(1,1)
        RETURN
C END OF SUBROUTINE SOL
        END
```

Sample Input

```
 1  EN=5. N=120 JEL=2 IPRINO=100 INTER=30 TLIMIT=.1  AA=76.
 2  HH=2. SS=328. W=.283 GNU=.3 E=30.E+06 SIGMA=100. TEPS=5.E-05
 3  WF=.036  XIN=0. OUT=1. OMEGA=0. OMEGAL=0. CDP=.001 END1
 4  TOMO=1. 0. 0. 0. TOMN=1. 0. 0. 0.,
 5  (ETAEL(I),I=1,40)=0.(.00005),.00195 ELDO=160(0.) ELDN=160(0.) END2
 6  MOU=6 ETAU=.01 EKU=0. 160. 164. 168. 324. 328.
 7  QU=0. 0. 1. 0. 0. 0. END3
 8  RIA=15. RIB=76. MRI=18 MBDCNDI=3 NBDCNDI=1 END4
 9  ROA=76. ROB=86. MRO=8  NBDCNDO=1
10  (BDC(I),I=1,20)=0. (BDD(I),I=1,20)=0. MBDCNDO=3 END5
11  ETAUL=.01 IPP=0 KP=26 FP=25(0.) END6
12  ETAU=10. QU=6(0.) END3
13  ETAUL=10. FP=25(0.) END6
```

```
THICKNESS= 2.0000 IN.                RADIUS=  76.00 IN.    LENGTH= 328.00 IN.
SHELL DENSITY=0.2830 LBS./CU.IN.     E=30000000. PSI       SIGMA=  100. PSI          NU=.3000
TIME INCREMENT=5.00E-05 SECS         NO. AXIAL NODES= 120  FOURIER NO.=  5.          CDP=  1.00E-03
FLUID DENSITY=0.0360 LBS./CU.IN.     XIN=0.                OUT=1.00
MBDCNDO= 3                           NBDCNDO= 1            MBDCNDI= 3                NBDCNDI= 1

OUTER FLUID OUTER RADIUS=  86.00 IN.                       INNER FLUID INNER RADIUS=  15.00 IN.
NO. OF RADIAL NODES IN OUTER FLUID= 8                      NO. OF RADIAL NODES IN INNER FLUID=18
LOADING FREQUENCY ON SHELL SURFACE=   0.   HZ              PRESSURE FREQUENCY ON FLUID SURFACE=   0.   HZ


                                 BOUNDARY CONDITIONS



TIME=  5.00E-05 SECS                    X=0                          X=L
U                                 0.            1.0          0.            1.0
V                                 0.            0.           0.            0.
W                                 0.            0.           0.            0.
M-XI                              0.            0.           0.            0.


PRESSURES AT TIME=  1.00E-02 SECS
STATION (IN)                 PRESSURE (PSI)

      0.                          0.
    160.00                        0.
    164.00                        1.000
    168.00                        0.
    324.00                        0.
    328.00                        0.


                    NON-DIMENSIONAL Z AT TIME= 5.000E-03 SECS
STATION   S (IN)        U            V            W            M-XI          HYD LOAD (PSI)     ACC          PHI (IN.)
  0        0.00     1.052E-04    2.180E-19   -6.813E-19    2.303E-17
 30       82.00    -1.595E-03    1.913E-03   -8.908E-03   -2.559E-02    -3.490E-03    9.456E-04    2.204E+01
 60      164.00     5.551E-16   -2.942E-02    1.642E-01    5.720E-01    -6.480E-03    1.418E-03    2.730E+01
 90      246.00     1.595E-03    1.913E-03   -8.908E-03   -2.559E-02    -3.490E-03    9.456E-04    2.204E+01
120      328.00    -1.052E-04    0.           0.           0.            0.            0.           0.

          AVERAGE PHI FOR THIS TIME STEP=     2.252E+01     RUNNING AVERAGE OF PHI=     1.588E+01


                    NON-DIMENSIONAL Z AT TIME= 1.000E-02 SECS
STATION   S (IN)        U            V            W            M-XI          HYD LOAD (PSI)     ACC          PHI (IN.)
  0        0.00     1.420E-04    9.649E-18    0.           2.068E-15
 30       82.00    -9.851E-03   -1.272E-02    6.593E-02    9.408E-03    -5.826E-04   -1.135E-04    4.223E+01
 60      164.00     1.246E-14   -1.039E-01    5.508E-01    1.314E+00     2.181E-03   -5.190E-04    2.511E+01
 90      246.00     9.851E-03   -1.272E-02    6.593E-02    9.408E-03    -5.826E-04   -1.135E-04    4.223E+01
120      328.00    -1.420E-04    0.           0.           0.            0.            0.           0.

          AVERAGE PHI FOR THIS TIME STEP=     2.146E+01     RUNNING AVERAGE OF PHI=     2.002E+01
```

PRESSURES AT TIME= 1.00E+01 SECS

STATION (IN)	PRESSURE (PSI)
0.	0.
160.00	0.
164.00	0.
168.00	0.
324.00	0.
328.00	0.

NON-DIMENSIONAL Z AT TIME= 1.500E-02 SECS

STATION	S (IN)	U	V	W	M-XI	HYD LOAD (PSI)	ACC	PHI (IN.)
0	0.00	-6.049E-03	-2.062E-17	0.	8.682E-16			
30	82.00	-1.205E-02	-3.963E-02	1.993E-01	1.069E-01	8.613E-03	-2.183E-03	2.358E+01
60	164.00	3.636E-15	-1.329E-01	6.949E-01	1.409E+00	1.010E-02	-2.183E-03	2.765E+01
90	246.00	1.205E-02	-3.963E-02	1.993E-01	1.069E-01	8.613E-03	-2.183E-03	2.358E+01
120	328.00	6.049E-03	0.	0.	0.	0.	0.	0.

AVERAGE PHI FOR THIS TIME STEP= 2.616E+01 RUNNING AVERAGE OF PHI= 2.123E+01

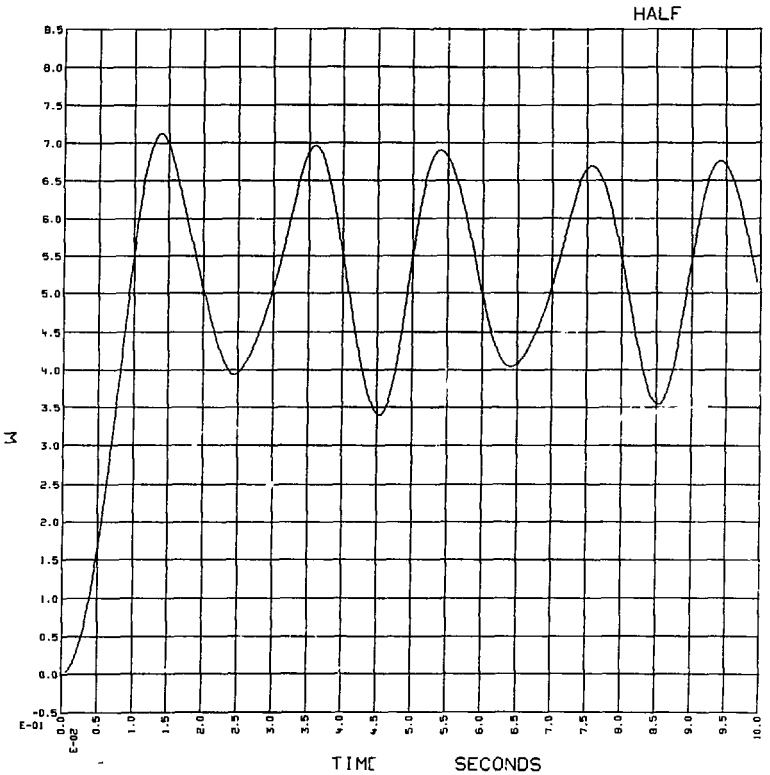

Figure D-1. Time History of Dimensionless Radial Displacement at the Shell's Mid-point

REFERENCES FOR APPENDIX D

D-1. Martin, J. T., et. al., "LRLTRAN Language Used with the Chat and Star Compilers," Lawrence Livermore Laboratory Report LTSS-207, Edition 4,(Dec. 1974).