9-20-77
181

Lb. 1428

GENERAL ATOMIC™

GA-A14452
UC-77

MASTER

A DESIGN EVALUATION OF THE 40-cm (16-INCH) PRIMARY BURNER SYSTEM

by

J. S. RODE

Prepared under
Contract EY-76-C-03-0167
Project Agreement No. 53
for the San Francisco Operations Office
U.S. Energy Research and Development Administration

DATE PUBLISHED: JUNE 1977

DISTRIBUTION OF THIS DOCUMENT IS UNLIMITED

NOTICE

This report was prepared as an account of work sponsored by the United States Government. Neither the United States nor the United States Energy Research and Development Administration, nor any of their employees, nor any of their contractors, subcontractors, or their employees, makes any warranty, express or implied, or assumes any legal liability or responsibility for the accuracy, completeness or usefulness of any information, apparatus, product or process disclosed, or represents that its use would not infringe privately owned rights.

Printed in the United States of America
Available from
National Technical Information Service
U.S. Department of Commerce
5285 Port Royal Road
Springfield, Virginia 22161
Price: Printed Copy ~~$6.00~~ 8.00; Microfiche $3.00

DISCLAIMER

This report was prepared as an account of work sponsored by an agency of the United States Government. Neither the United States Government nor any agency Thereof, nor any of their employees, makes any warranty, express or implied, or assumes any legal liability or responsibility for the accuracy, completeness, or usefulness of any information, apparatus, product, or process disclosed, or represents that its use would not infringe privately owned rights. Reference herein to any specific commercial product, process, or service by trade name, trademark, manufacturer, or otherwise does not necessarily constitute or imply its endorsement, recommendation, or favoring by the United States Government or any agency thereof. The views and opinions of authors expressed herein do not necessarily state or reflect those of the United States Government or any agency thereof.

DISCLAIMER

Portions of this document may be illegible in electronic image products. Images are produced from the best available original document.

GENERAL ATOMIC

GA-A14452
UC-77

A DESIGN EVALUATION OF THE 40-cm (16-INCH) PRIMARY BURNER SYSTEM

by

J. S. RODE

NOTICE
This report was prepared as an account of work sponsored by the United States Government. Neither the United States nor the United States Energy Research and Development Administration, nor any of their employees, nor any of their contractors, subcontractors, or their employees, makes any warranty, express or implied, or assumes any legal liability or responsibility for the accuracy, completeness or usefulness of any information, apparatus, product or process disclosed, or represents that its use would not infringe privately owned rights.

Prepared under
Contract EY-76-C-03-0167
Project Agreement No. 53
for the San Francisco Operations Office
U.S. Energy Research and Development Administration

DISTRIBUTION OF THIS DOCUMENT IS UNLIMITED

GENERAL ATOMIC PROJECT 3225

DATE PUBLISHED: JUNE 1977

ABSTRACT

This report describes an evaluation of the design of the existing 40-cm (16-in.) engineering-scale primary burner system in the HTGR reprocessing cold pilot plant at General Atomic Co. The purpose of this evaluation is to assess the suitability of the existing design as a prototype of the HTGR Recycle Demonstration Facility (HRDF) primary burner system and to recommend alternatives where the existing design is thought to be unsuitable as a prototype. This evaluation has led to recommendations for the parallel development of two integrated design concepts for a prototype primary burner system. One concept utilizes the existing burner heating and cooling subsystems in order to minimize development risk, but simplifies a number of other features associated with remote maintenance and burner operation. The other concept, which offers maximum cost reduction, utilizes direct contact hot gas heating and internal gas cooling of the burner, but requires considerable development to reduce the risk to acceptable limits. These concepts, as well as other design alternatives, are described and evaluated.

CONTENTS

		Page
1.	Summary	1
2.	Introduction	1
3.	Evaluation of Present System	4
4.	Alternatives	5
5.	Comparison of Alternatives and Present System	6
6.	Development of an Integrated Burner System Design Concept	15
7.	Conclusions and Recommendations	19
8.	Future Work	22
9.	Acknowledgements	23
10.	References	24

TABLES:

I.	Scope of Evaluation - Definition of Design Features	25
II.	Functional Analysis	27
III.	Best Options for Design Features	28
IV.	Best Value Integrated Burner System Design Concept	29
V.	Minimum Risk Integrated Burner System Design Concept	30

FIGURES:

1.	Primary Burner Assembly, 5244005A	31
2.	Design Feature #1 Options	33
3.	Upper Shroud Assembly	35
4.	Heater and Shroud Assembly	37
5.	Burner Vessel Assembly	39
6.	Methods of Cooling Burner	41
7.	Susceptor Tube	43
8.	Ceramic Insulator	45
9.	Methods of Heating Burner	47
10.	Insulation Bonnet Assembly	49
11.	Left Half Bonnet Assembly - 8 in. Secondary Burner	51
12.	Right Half Bonnet Assembly - 8 in. Secondary Burner	53
13.	Best Value Integrated Burner System Design Concept	55
14.	Minimum Risk Integrated Burner System Design Concept	56

APPENDICES:

I. FAST Diagrams 57
II. Evaluation of Present System. 69
III. Cost Analysis of Present System 81
IV. New Ideas for 10 Design Features. 95
V. Evaluation of Alternatives. 107
VI. Comparison of Alternative Designs 121

SUMMARY

This report describes an evaluation of the existing cold pilot plant design of the 40-cm (16-in.) engineering-scale primary burner system. The purpose of this evaluation is to assess the suitability of the existing design as a prototype of the HTGR Recycle Demonstration Facility (HRDF) primary burner system and to recommend alternatives where the existing design is thought to be unsuitable as a prototype. This evaluation satisfies the intent and requirements of the Experimental Plan Activity 501-502, "Equipment Design Evaluation," for Subtask 210.

This evaluation has led to recommendations for the parallel development of two integrated design concepts for a prototype primary burner system. One concept utilizes the existing burner heating and cooling subsystems but simplifies a number of other features associated with remote maintenance and burner operation; this concept involves minimum development risk to achieve design objectives. The other concept modifies the heating and cooling subsystems and also eliminates or simplifies a number of other features associated with heating, cooling, remote maintenance, and burner operation. The modified heating subsystem uses hot gaseous carbon dioxide and direct-contact heating of the burner contents; the modified cooling subsystem uses an internal gas-cooled heat exchanger. This second integrated design concept offers the potential for maximum cost reduction, simplicity of design and ease of fabrication, but involves significantly greater risk. Therefore, it must be studied in more detail and tested in existing smaller-scale pilot plant equipment before implementation as part of the prototype primary burner system.

INTRODUCTION

Possible modification of the existing dry head-end cold pilot plant engineering-scale equipment to reliable and maintainable equipment that is prototypical of the HRDF design has required an evaluation of the existing equipment design. This evaluation has taken into account performance, cost, ease of implementation of changes, impact of changes on the current HRDF design, and customer (ERDA) acceptance. Feasible alternative designs have been similarly evaluated. The prototype design that results from this and any subsequent evaluations should be capable of performing all required functions at the lowest present worth cost when extrapolated over the life of the HRDF.

The method of achieving these objectives included the development of information in the following sequence:

1. Preliminary system definition. The limits of the system were established based on similarity to the current HRDF design. Features which serve only a development testing function, such as instrumentation or sampling equipment, were excluded.

2. Functional Level Diagram. The hierarchy of functional relationships between the system and its constituent parts was graphically displayed.

3. Functional Analysis System Technique (FAST) Diagram. The basic and secondary functions of important design features and the interactions between these functions were graphically depicted. This technique aided the evaluation of the cost effectiveness of particular hardware items.

4. Definition of scope of evaluation. The number of design features to be evaluated was reduced to only those that are mandated by basic process requirements and/or by HRDF facility requirements.

5. Evaluation of present system design. The present (cold pilot plant) design of the burner system was evaluated with respect to how it satisfies current technical specifications and such other requirements as ease of installation, operability, maintainability, and reliability.

6. Analysis of present system costs. Installed costs were developed for those key features being evaluated. These costs include purchased materials, fabrication and assembly, and installation.

7. Selection and evaluation of alternative system designs. Ideas, concepts, and designs were generated as alternatives to those present design features that have real or potential problems or that represent relatively high capital cost or operating expense. Then these alternatives were reduced to the best two or three that are capable of meeting the same technical specifications and constraints as the present design.

8. Analysis of alternative system costs. Differential installed costs for each alternative design feature (compared to the present design feature) were developed, including the same types of costs that characterize the present design.

9. Comparison of present and alternative systems. The techniques of value engineering, including subjective assessments of performance and objective comparisons of cost, were used to compare the present design features and the best alternatives.

Before selection of the features of the present design to be evaluated, discussions of experienced or expected problems were conducted with cognizant persons (see Acknowledgements) in the areas of design, engineering, planning, purchasing, manufacturing, quality assurance, installation, and operation. Many common problems were revealed, such as the magnitude of manufacturing tolerances and methods of fabrication. These problems were consolidated, and affected hardware and their basic functions were identified.

Then the sources of the requirements for these features were identified as shown in Table I. Source categories included basic process requirements, remote maintenance requirements, and facility (ACCP, GA, HRDF) requirements. Those features that resulted solely from ACCP or GA facility requirements were then excluded from the scope of the design evaluation. One additional feature, the cyclone flanges, was subsequently excluded from the scope of the evaluation after it had been decided that standard engineering practice during the design of the HRDF would eliminate the structural problems with the existing flange design.

The remaining thirteen features, then, constituted the scope of the design evaluation, as follows:

1) Separability of upper and lower cooling shrouds.
2) Hinged doors on upper shroud and lower plenum.
3) Sliding seal between cooling shroud and vessel.
4) Remote disconnects (main vessel flanges and smaller flanges).

5) The concept of a coolant pressure boundary (shroud) external to the vessel.
6) The absence of recycle fines cooling capability.
7) The method of waste heat rejection from (in-cell) burner equipment.
8) The method of attachment of vessel thermocouples.
9) The method of fabrication of the susceptor.
10) The length of the burner tube.
11) The type of burner insulation used.
12) The method of heating the burner vessel and its contents.
13) The design of the insulation bonnet assembly.

EVALUATION OF THE PRESENT SYSTEM

The principal functions of the thirteen selected design features of the present 40-cm primary burner system were derived from FAST Diagrams (Appendix I) and are listed in Table I. As these functions indicate, five of the thirteen features are concerned with remote maintenance requirements, and the other eight features involve aspects of process equipment design or manufacturing.

The advantages and disadvantages of each of these features of the present system are listed in Appendix II in a generally random order. Also listed are technical specifications or other constraints imposed on the design of these features. Most of the existing burner system design features are able to perform the principal functions for which they were designed. The chief problems generally involve difficult fabrication, poor maintainability, difficult installation, or high cost.

The installed costs of the thirteen features of the present burner system are given in Appendix III. They include purchased material, manufacturing costs, and installation (technician labor). The costs are based on actual purchase orders, service requests, and internal department work requests. The features analyzed are all defined by released drawings or other traceable documents, as noted on the worksheets in Appendix III.

Once the costs of the present system had been developed, a functional analysis was carried out on eleven of the thirteen design features in order to highlight

areas of the design where cost-effective improvements are especially needed (recycle fines cooling capability and waste heat recovery were omitted from this analysis because these two features do not presently exist). This analysis is given in Table II. In this analysis, a 'value' was placed on the function being performed by the design feature based on the known cost of an item of equivalent value or its material cost, etc. The basis is stated in the table. The known cost (C) and assumed 'value' (V) were then used to estimate a value index ($I_v = C/V$), which is useful in identifying probable targets for value engineering analysis.[1] Typically, value engineering studies are able to achieve value indexes of 5 to 10 for most manufactured products either by reducing costs or increasing the functional capabilities (value), or both. In the case of the existing primary burner system, only two of the eleven features analyzed have a value index greater than 50, the susceptor and the vessel thermocouples.

In addition to the index I_v, another index $I_v \times C = C^2/V$ was computed in order to give higher priorities for value engineering analysis to high cost items rather than to low cost items which happen to have a high cost-to-value ratio (I_v). In this case, the targets for improvement appear to be the cooling shrouds, the main vessel (remote) flanges, the heating subsystem, and the susceptor, all of which have a ratio C^2/V greater than 100.

ALTERNATIVES

After evaluation of the present system had been completed, the techniques of value engineering were used to generate new ideas, designs, and methods for achieving the same functions performed by the existing design features. The generation of new ideas was carried out without the imposition of any design constraints in order to enhance freedom of thought and to maximize the number of potential alternative designs. New ideas were generated in a creative thinking session with five other engineers who had been personally involved in various aspects of the design fabrication, installation, and operation of the 40-cm primary burner (see Acknowledgements). An average of seven new ideas were conceived for each of a total of ten design features considered. New designs were not considered for three other design features, since specific alternatives to these features had already been selected for evaluation based on previous work, as follows:

1) Method of heating the burner vessel and its contents: hot gas (CO_2) heating.
2) Type of burner insulation used: fiber.
3) Type of insulation bonnet assembly fabricated: 'split-dome' design as used on the 20-cm (8-in.) secondary burner.

The new ideas conceived in this manner are listed for each of these ten design features in Appendix IV.

Once a number of ideas had been conceived for each design feature, then constraints and technical specifications were applied against them. In addition, ideas with similar or compatible features were combined. The aim was to reduce the number of alternatives to be evaluated further to a maximum of two or three. Then the advantages and disadvantages of each remaining alternative were compiled. The alternatives, constraints, advantages, and disadvantages for each of the thirteen design features are given in Appendix V.

Before costs could be estimated for each of the remaining alternatives, enough technical information had to be compiled about each one to serve as a basis for cost development. This information included equipment sizes, pressure and temperature ratings, amounts of construction materials used, etc. Then each alternative was compared to the existing design feature, and differential costs were estimated to reflect differences from the present design in material cost, fabrication cost, and installation cost. These costs, which are given in Appendix V, were based on various sources, such as GA Purchasing Dept. data, verbal quotations from suppliers, and literature data.[2] Standard equipment escalation factors were applied to bring all estimated costs to a January, 1977 base for comparison.

COMPARISON OF ALTERNATIVES AND THE PRESENT SYSTEM

Value engineering techniques for evaluation of several alternative designs utilize the concepts of 'performance' and 'value.' Performance, in this case, is a composite, quantitative rating of how well a particular design satisfies all significant evaluative criteria, such as maintainability, reliability, ease of implementation, customer acceptance, etc. Value is the ratio of performance to estimated cost, higher ratios being preferred over lower ratios. Normally, if the total cost of a design is known with reasonably high confidence (>85%), the

value index is sufficient to determine the merits of one alternative over another. However, in this evaluation, the cost estimates are known with a confidence level of no more than 75%. Therefore, in this evaluation, both performance and value have been considered in judging the relative merits of alternative designs.

The actual ratings and estimates for the 13 design features are given in Appendix VI. A brief discussion of the results in each case follows:

Design Feature #1 - Cooling Shroud Separability (Fig. 1)

The idea of eliminating the need for this design feature by using a single, full-length cooling shroud and eliminating the induction coil (B) has an advantage over the present system and over the other alternatives only in the area of maintainability. This is primarily a result of the elimination of the entire induction heating subsystem and the substitution of a simpler, potentially more maintainable type of heating subsystem, for example, hot gas heating (Fig. 2).

The equally important criterion of the effect on burner operation and performance seems to favor the existing design or the use of a single cooling shroud with retention of the induction heating coil (C). Elimination of the upper shroud (A) will require insulation of the upper wall, and it is not known what effect any resulting differences in heat losses may have on fines burning efficiency and other aspects of burner performance.

Naturally, the criteria of ease of implementation in the cold pilot plant and impact of changes on current HRDF design favor the existing design. Nevertheless, alternative C was also given a relatively high rating in these areas because it represents the Hot Engineering Test Facility (HETF) primary burner design, which has already been engineered. Alternative B would be the most difficult to implement and would mean a substantial rework of HRDF burner design concepts because of the elimination of the induction heating subsystem.

In the author's opinion, customer (ERDA) acceptance of alternative A would be enhanced because the changes could be implemented relatively quickly and would yield the desired benefit of elimination of the shroud separability feature. The other alternatives would probably be harder to 'sell' based on the greater design changes required.

The overall weighted performance favors the present design by a small margin over alternative C. Value, however, is greatest for alternative B because of the large potential cost savings from elimination of the induction-heating subsystem, although the advantage is not significant.

Design Feature #2 - Hinged Doors on the Upper Shroud and Lower Plenum (Figs. 3 & 4)

The hinged doors on the upper shroud were evaluated separately from those on the lower plenum. The upper shroud location is discussed first.

Neither an integral upper shroud (A) nor elimination of the upper shroud (B) offers the degree of maintainability that the present design does, since elimination of the doors means that other ways of removal and inspection of the vessel must be provided. However, both alternatives do offer the possibility of a much easier burner installation than the present design by eliminating the alignment problems that result from warpage of the doors and cooling shroud.

Although the present design is naturally favored when ease of implementation in the pilot plant is considered, both alternatives are rated as well as the present design with regard to their impact on the HRDF design, since methods of vessel inspection and removal for HRDF have not yet been determined. In evaluating ERDA acceptance, the present design was given the highest rating because of the author's belief that vessel removal or inspection and other aspects of maintainability will be more important to ERDA than ease of installation when they consider the licensability of a prototype design.

The overall weighted performance favors the present design, but alternative B has the highest value due to the cost savings from elimination of the upper shroud.

Similar arguments were made with respect to the alternative to the hinged doors on the lower plenum. Overall weighted performance was highest for the present design. Value was highest for the present design and for alternative C, the elimination of the plenum, etc., and lowest for alternative D, revision of the methods of burner removal and support.

Design Feature #3 - Sliding Seal Between Coolant Shroud and Vessel (Fig. 1)

Three of the four alternative designs - bellows-loaded face seal (A), the present seal design with a different seal material (B), and changing the location of the present seal to a low pressure zone (C) - all retain the same degree of maintainability as the present design. The fourth alternative, the use of a welded cooling shroud integral with the vessel (D), has a low degree of maintainability, since the shroud and vessel cannot be separated for inspection of the vessel wall, remote clamps, etc.

In terms of the ability to reduce the amount of coolant leakage to atmosphere or seal performance, alternatives A and D rate the highest. Alternative B rates the lowest.

Since alternative B merely involves substitution of a different seal material in the present seal design, it rated nearly as well as the present design in terms of ease of implementation in the pilot plant and impact on HRDF design.

Since burner maintainability and seal performance are probably the most important evaluative criteria, however, ERDA acceptance of alternative A over the others is likely.

Thus, overall weighted performance is best for alternative A. However, alternative D has the highest value because of the substantial savings that results from a simpler shroud design.

Design Feature #4 - Remote Disconnects (Fig. 5)

The main vessel flanges and the smaller flanges were treated separately. In the case of the main flanges, it was determined that the top 46-cm (18-in.) flange and remote clamp are no longer required for maintenance based on pilot plant experience. Therefore, neither of the alternative designs includes it.

Maintainability is best for alternative B, in which the lower 36-cm (14 in.) flange is eliminated completely and the cone distributor (maintenance of which is the raison d' être for the lower flange) is replaced by multiple gas injection ports or nozzles. This, of course, assumes that the gas injection ports are relatively free from any maintenance requirements.

When the equally important criterion of the impact of the change on burner operation and performance is considered, alternative A, the relocation of the lower flange to a cooler zone below the cone distributor, etc., is far superior to alternative B. There is a high risk of failure of gas injection ports as a means of achieving the necessary mixing in the burner.

Alternative A is also superior to alternative B in terms of ease of implementation in the pilot plant and impact of the change on HRDF design. ERDA acceptance of A over B is very likely because of the high risk associated with the alternative gas distribution design.

Overall weighted performance of the present design is highest, followed closely by that of alternative A. Value is highest for alternative A because of the large savings potentially realized by the elimination of the top flange and remote clamp, the swing-bolt connection, and the Grayloc hubs and spools.

With respect to the smaller remote flanges (top cap nozzles and bottom vertex pipe), the present design is judged superior to either of the two alternatives - the use of modified Tri-Clover or 'G' and 'H' clamps (C) and cutting and re-welding each pipe (D) - in any of the four evaluative criteria: maintainability, ease of implementation in the pilot plant, impact of the change on HRDF design, and ERDA acceptance. Alternative C has a much lower overall weighted performance, although it is higher than that for alternative D. Alternative C appears to have the highest value, although uncertainties in the estimates of the cost of modifying Tri-Clover clamps or supplying an equivalent clamp make the advantage tenuous at best.

Design Feature #5 - Method of Cooling the Burner and Its Contents (Fig. 6)

Two alternative designs to the present external cooling shroud were considered: the use of an internal heat exchanger consisting of an array of vertically-oriented tubes (A) and the use of coolant holes in the burner vessel wall (B). Both alternatives utilize gaseous CO_2 as coolant.

The present system appears to have a clear superiority over either alternative in all but one of the evaluative criteria: process performance characteristics, e.g., fluidization; ease of implementation in the pilot plant; impact of the change on HRDF design; and ERDA acceptance. The exception is maintainability, for which alternative B has a clear advantage, since there is nothing in the design to maintain. Alternative A has the lowest rating in the area of maintainability because of potential mechanical problems with internal tubes and the difficulty in removing the tubes for repair.

Alternative B and the present design are superior to alternative A in the important area of process performance characteristics, primarily because neither of them physically affects fluidization and internal bed dynamics.

On the other hand, when costs are considered, alternative A has the highest value, since it offers a potentially large savings from elimination of the cooling shrouds with virtually no change in the size of the burner.

Design Feature #6 - Recycle Fines Cooling Capability

Only one alternative to the present design is proposed: cooling and/or redesigning the rotary valve for high temperature service and designing the off-gas filter, cyclone, and piping for higher temperature. This alternative is superior to the present design in terms of maintainability (better access to rotary valve shaft and bearings), reliability (fewer failures), effect on burner operation (capable of controlling recycle fines temperature), and ERDA acceptance (primarily due to better reliability). However, although the overall weighted performance of the alternative design is higher than that of the present design, its value is less because of an estimated cost increase of approximately $25,000.

Design Feature #7 - Method of Waste Heat Rejection to the Environment

Two alternatives to the present design (where waste heat is partially rejected to the immediate environment) exist: remove the waste heat by direct cooling of the equipment rejecting it (A), or provide for additional cooling of the hot cell (environment for HRDF) via the heating, ventilating, and air conditioning (HVAC) system (B).

The reliability of alternative B is probably best because the required equipment is less complex. The effect of the change on burner operation is best with alternative A, since the temperature of each heat source in the burner system can be controlled independently of the others. For these reasons, ERDA acceptance of either alternative is considered to be highly probable and more likely than their acceptance of the present system. Of course, ease of implementation of the change in the pilot plant and impact of the change on HRDF design favor the present design.

The overall weighted performance and value of alternative A are highest.

Design Feature #8 - Method of Vessel Thermocouple Attachment

Ease of installation of spring-loaded thermocouples (A) is greater than that of a welded thermocouple design (B) or the present design. However, alternative B probably has the highest reliability because of its strong method of attachment and direct metal-to-metal contact with the vessel wall (NOTE: It is reported that Hanford has had good experience with spring-loaded thermocouples).

The spring-loaded thermocouples would be easiest to implement in the pilot plant since no welding is required. Neither alternative nor the present design has any impact on current HRDF design. ERDA acceptance of alternative B is probably enhanced by its better reliability.

The overall weighted performance of the present design seems to be somewhat better than for either alternative, but the costs result in the best value for alternative A, although the differences are not particularly significant.

Design Feature #9 - Method of Fabrication of Susceptor (Fig. 7)

A comparison of the three alternatives - casting, forging, roll and weld non-magnetic 300-series stainless steel - and the present design (roll and weld Rolled Alloy 333) is not possible at this time. The relative merits and costs of these techniques are highly dependent on the fabricator selected and on the time of fabrication. Such information must be obtained at the time of actual prototype design.

Design Feature #10 - Burner Length

Three alternatives to the present burner design have been evaluated: enlargement of the upper section of the burner (A), lengthening of the burner by approximately 50% (B), and installing baffles in the top section of the existing burner (C). Alternative A has an advantage in the improvement of burner performance (reduction of particle carryover) because it allows an increase in the recoverable particle size ranges without an increase in particle breakage. Alternative C would be the easiest to implement in the pilot plant and would result in the smallest impact on HRDF design (other than the present design). The design most likely to receive ERDA acceptance is alternative B because of the high probability of success with this design.

Alternative A has the best overall weighted performance but the present design has the best value when costs are included, although the differences in value are not significant. If particle carryover with the present burner appears to be a real problem, then alternative A appears to offer the next best solution.

Design Feature #11 - Type of Burner Insulation

One alternative (fiber) to the present induction coil insulation (ceramic) has been evaluated. The ceramic (Fig. 8) appears to have higher maintainability because of its superior handling characteristics (structurally rigid). The insulation characteristics of the fiber are better than those of the ceramic because of its lower thermal conductivity. It is felt that the ceramic would be slightly preferred by ERDA (acceptance) because of current successful experience with it.

The overall weighted performance of the ceramic insulation appears to be higher than that of the fiber. However, because of its lower cost, fiber appears to be the better value.

Design Feature #12 - Method of Heating the Burner & Its Contents (Fig. 9)

Hot gas (CO_2) heating has been evaluated as an alternative to induction heating of the burner and its contents. The feasibility of this method had been discussed before.[3] Gaseous CO_2 at 900°C (1650°F) is injected into the bottom of the burner at a flow rate which is assumed to vary linearly with bed temperature. Calculations show that a whole bed (∿3 FEs) can be heated to its ignition temperature of 700°C (1292°F) in approximately 3 hours[4], compared to 1-2 hours with the induction heating system. Since the amount of gaseous CO_2 required for hot gas heating is no greater than for induction heating, the amount of solid waste generated from the processing of the CO_2 in an off-gas treatment system is approximately the same in both cases.

Based on this information, the cost of a system for delivering hot gaseous CO_2 to the burner has been estimated. The system consists of a 0.379 m^3 (100 gallon) pressurized liquid propane storage tank, a 3 kilowatt electrical immersion heater for vaporizing the propoane, a direct-fired gas heater rated at 117 kilowatt (400,000 Btu/hr.) for heating the gaseous CO_2 from ambient to 900°C, and all the necessary piping, valves, and controls. The direct-fired heater burns propane gas at atmospheric pressure and 16°C (60°F).

Because this equipment is very conventional commercial equipment with many years of proven performance and relatively little maintenance, the reliability and maintainability of the hot gas heating system are rated as high or higher than those of the existing induction heating system.

The induction heating system, however, was rated higher in terms of its effect on burner performance, since the calculations of heatup time with the hot gas heating system described earlier require pilot plant verification. Naturally, the criteria of ease of implementation in the pilot plant and impact of the change on HRDF design favor the existing induction heating system. Moreover, it is felt that ERDA would slightly favor the existing heating system until actual data could be collected to verify the potential advantages of hot gas heating in maintainability and cost (ERDA acceptance).

Therefore, the overall weighted performance of the existing induction heating system is rated higher than that of a hot gas heating system. When costs are factored in, however, the less costly hot gas heating system has a higher value.

Design Feature #13 - Type of Bonnet Assembly

The existing 'unitized' insulation bonnet assembly (Fig. 10) has been compared to the 'split-dome' construction used on the 20-cm secondary burner (Figs. 11 & 12).

Since actual pilot plant experience shows that the 'split-dome' construction requires less time to remove from the burner, its maintainability was judged to be superior to that of the existing 'unitized' insulation bonnet assembly. In all other respects - ease of fabrication, ease of implementation in the pilot plant, impact of the design on HRDF design, and ERDA acceptance - the existing bonnet assembly was deemed superior.

As a result, the overall weighted performance of the existing design is rated higher than the 'split-dome' alternative. Since the existing design is also cheaper to fabricate, its value is also significantly greater than that of the alternative design.

DEVELOPMENT OF AN INTEGRATED BURNER SYSTEM DESIGN CONCEPT

Until now, each of the thirteen design features (for the existing design and alternatives) has been evaluated independently, without consideration of interfacing with any of the other features. It seems prudent, however, to consider the effect of the best designs in each case on the whole system, and in so doing, to develop an integrated burner system design concept that constitutes the best 'composite' of design options.

Toward this end, Table III lists both the 'best value' option and the 'best performance' option for each of the thirteen design features from the results in Appendix VI. From this list, it can be argued that the methods of heating and cooling the burner and its contents are the design features

with the largest number of interfaces and the greatest impact on the total system. Once these designs are established, most of the designs for the other features fall into place.

Two integrated burner system design concepts can be developed. One represents the 'best value' composite of design features but may include inherent, relatively high development risks of failure to achieve design objectives. The other represents the 'minimum risk' composite but may result in only modest improvements in performance or cost.

Best Value Composite

Although the existing external cooling shroud is the 'best performance' option for cooling the burner when one considers its heat removal function only, this performance is devalued by its remote maintenance characteristics evaluated in connection with shroud separability and the hinged shroud doors. In fact, elimination of the shroud is seen to be a preferred option for these other remote maintenance features (Table III). In addition, at least half the difference between the performance indexes of the existing shroud and an internal heat exchanger can be eliminated by successful pilot plant testing of this alternative concept. Finally, the potential cost savings with an internal heat exchanger is so large that removal of cost uncertainties will still result in a 'value' advantage for the internal heat exchanger. Therefore, the internal heat exchanger concept offers great potential, in my opinion, for an optimum method of cooling the burner and its contents. Nevertheless, this design involves considerable risk. Potential problems include mechanical support of the tubes; heat exchanger maintenance; tube failures; and effects of internal components on fluidization, fines burning efficiency, and particle breakage. For example, Exxon has experienced continuing problems of internal cooling coil damage from thermal stress, corrosion, and bending in their pressurized fluidized-bed coal combustors.[5]

Similarly, although the existing induction heating system is the 'best performance' option for heating the burner, elimination of this system would also eliminate the need for a susceptor and would make the use of external

fiber insulation even more defensible (features 9 and 11, Table III). Furthermore, most of the difference between the performance indexes of the existing system and the hot gas (CO_2) heating system can be eliminated by successful pilot plant testing of this alternative concept. Finally, the much lower cost estimated for the hot gas heating system means that the 'value' advantage of this option will probably be preserved even after removal of cost uncertainties. Therefore, the hot gas heating concept offers great potential, in my opinion, for an optimum method of heating the burner and its contents. However, this concept also involves considerable risk. Potential problems include maintenance and control of the direct-fired heater and control of the burner during "equilibrium" and "tailburn" phases of the operating cycle.

Based on the foregoing decisions, the following features can be eliminated altogether: cooling shroud (feature #1), hinged doors (feature #2), sliding seal (feature #3), insulation bonnet assembly (feature #13), and the susceptor (feature #9). Fiber insulation, which is the 'best value' option for feature #11, is even more compatible once the induction heating system is eliminated.

Feature #4: The 'best value' option, relocation of the lower remote flange, etc., should be adopted as the prototype design feature. Its performance index is virtually the same as that of the existing design.

Feature #6: The 'best performance' option for recycle fines cooling is mandated by reliability requirements for a commercial facility.

Feature #7: The 'best performance' option for waste heat rejection is mandated by HRDF design requirements, i.e., maximum hot cell temperature limits and external equipment emperatures, and also gives the 'best value.'

Feature #8: Successful pilot plant testing of the 'best value' option, the spring-loaded thermocouples, would increase its performance index at least to a par with the existing thermocouples. This option merits testing for feasibility as a prototype design.

Feature #10: Carryover of whole and broken fuel particles from the top of the burner to the fines recycle subsystem can occur following fluidization as a

result of (a) bed slugging, or (b) elutriation. In the case of the existing 40-cm primary burner, the principal cause is bed slugging. Particle carryover by bed slugging can be diminished by reducing the bubble velocity (alternative A), providing capacity for bed expansion (alternative B), or sometimes by breaking up the bubbles with internal baffles (alternative C)[6]. The existing 40-cm primary burner has an $(L/D)_{msh*} \simeq 10$. Calculations indicate this to be inadequate to prevent significant carryover. Data obtained with the 20-cm primary burner [$(L/D)_{msh*} \simeq 15$] indicate very little particle carryover (<0.5% total) with above-bed gravity recycle[7]. Therefore, each of the alternatives should provide an equivalent $(L/D_{msh*} \simeq 15$. If operation of the existing 40-cm primary burner confirms the carryover calculations, then the cheapest way to reduce the carryover would be to add baffles to the top section of the existing burner. However, this method is likely to cause unacceptably high particle failure over the projected HRDF burner operating cycle as a result of repeated impacts between particles and baffles. Therefore, consideration should be given to adding an enlarged section [76-cm (30 in.) I.D. x 79-cm (31 in.) overall height including transition piece] to the top of the existing burner in order to reduce carryover with little or no increase in particle breakage.

The 'best value' integrated burner system design concept that results from these considerations is given in Table IV and illustrated schematically in Fig. 13.

Minimum Risk Composite

In this concept, the existing induction heating subsystem and the external cooling shrouds remain as the methods of heating and cooling the burner and its contents, respectively. Thus, most of the risk associated with the 'best value' integrated burner system design concept is eliminated. Based on this decision, the following features can be modified as follows:

Feature #1: The external cooling shroud design should be modified to provide for a single shroud similar to the HETF design. Maintenance procedures for removal of the burner and induction coil should be altered to be compatible with the shroud design. This design offers improvement in the maintainability of the burner system without adverse effects on burner operation and performance.

---

* msh - maximum slug height

Feature #2: The hinged doors in the upper and lower sections of the shroud should be eliminated. This is compatible with the 'best value' options for these features and with the recommended designs for feature #1 and feature #4.

Feature #3: The sliding seal should be eliminated in conjunction with the adoption of an integral (welded) shroud (feature #1). This also represents the 'best value' for this particular feature.

Features #4, #6, #7, #8 and #10: Same as 'best value' integrated burner system design concept.

Feature #9: The susceptor, of course, is retained as part of the induction heating subsystem. (Methods of fabrication of the susceptor should be investigated for the design of the HRDF burner.)

Feature #11: Fiber (WRP-X) insulation should be used for insulating the induction heating coil. This represents the 'best value' option for this feature.

Feature #13: The existing 'unitized' design of the insulation bonnet assembly should be retained, since it represents both the 'best value' and 'best performance' options.

The 'minimum risk' integrated burner system design concept that results from these considerations is given in Table V and illustrated schematically in Fig. 14.

CONCLUSIONS AND RECOMMENDATIONS

1) Methods of heating and cooling the prototype primary burner and its contents should be determined before any other prototype design features are selected.

2) Cooling the burner with an internal heat exchanger (vertical array of parallel tubes) may be feasible from a process point of view but involves considerable risk at this time. Nevertheless, the concept warrants further evaluation to verify feasibility. Several aspects of this concept must be evaluated in detail before a final decision is made:

a) Process-side ΔP. It must be acceptably low.
b) Effects of the tubes on slugging, mixing, and other dynamic characteristics of the fluidized bed.
c) Means of supporting the tubes and the mechanical effects of the tubes, their supports, and inlet/outlet CO_2 piping on stresses, vibration, bending, erosion, etc. The effect of process-side SO_2 and other gases on the corrosion of tubes and other internal components.
d) Effects of tubes in the upper section of the burner on fines burning efficiency, elutriation, agglomeration, and particle breakage.

If a more detailed evaluation indicates this concept is still feasible, then it should be tested in both the 20-cm cold glassware and 20-cm primary burners. Based on 3 experiments with each burner, the cost of implementing this concept on the prototype 40-cm primary burner is estimated to be approximately $59,000 (includes exempt and non-exempt direct labor charges for design, engineering, installation, and testing and the cost of small-scale heat exchangers for the 20-cm cold glassware and 20-cm primary burners).

3) Hot gas (CO_2) heating of the burner may also be feasible but also involves considerable risk at this time. Nevertheless, this concept warrants further evaluation to verify feasibility. The following points about this alternative design should be evaluated in more detail:

a) Controllability
b) Heatup time. It must be compatible with the HRDF operating cycle and production (availability) requirements.
c) Effects of the hot gas on the startup bed, including attrition, particle breakage, elutriation, etc.
d) Mechanical effects of the hot gas on the vessel and any internals, including any internal cooling tubes, i.e., stress, vibration, erosion, etc.

This concept should be tested on the 20-cm primary burner if further evaluation looks promising. Implementation cost of this concept on the prototype 40-cm primary burner is estimated to be approximately $56,000 (includes

exempt and non-exempt direct labor charges for design, engineering, installation and testing and the cost of a hot CO_2 delivery system for the 20-cm primary burner).

4) If both internal heating and cooling prove to be feasible, then design features #1 and #2 (external cooling shroud), #3 (seal between the shroud and the burner tube), #9 (susceptor), and #13 (insulation bonnet assembly) should be eliminated from the prototype burner design. Implementation costs for these changes are estimated in Appendix V. If these major concepts are not feasible, then the integrated burner system design concept presented in Table V should be developed.

5) The top vessel flange (46-cm Grayloc remote clamp) should be eliminated from the prototype burner design. The lower 36-cm remote flange should be relocated to a cooler zone below the distributor. The 36-cm Grayloc swing-bolt connection should be eliminated, and the 3.8-cm (1-1/2-inch) Grayloc remote disconnect on the vertex line should be moved from inside to outside the distributor assembly, as in the HETF primary burner design.

6) Efforts should be initiated to modify Tri-Clover (or equivalent) clamps as substitutes for the existing smaller Grayloc connections (13-cm (5-inch) and under).

7) Spring-loaded thermocouples should be installed and tested on the 20-cm primary burner. Particular attention should be given to their reliability and accuracy.

8) Current studies to find and test feasible ways to provide recycle fines cooling capability for the 20-cm primary burner should be completed and evaluated in conjunction with HRDF requirements for waste heat rejection. The prototype cyclone and off-gas filter should be designed for temperatures of 750°C (1382°F) and 700°C (1292°F), respectively, if jacket cooling of this equipment is not a feasible way to provide fines cooling.

9) An enlarged section should be added to the top of the existing 40-cm primary burner <u>if</u> future tests of the existing burner indicate unacceptable particle carryover.

10) Ways of handling and installing fiber insulation like WRP-X on the outside of the burner should be investigated and implemented once the method of heating the prototype primary burner has been established.

11) Remote maintenance fixtures should be evaluated in light of the results and recommendations of this study.

FUTURE WORK

Future design evaluation studies of the 40-cm primary burner should include the following three areas:

1) Location of recycle fines injection into the burner using a gravity hopper-rotary valve recycle fines system, especially side entry (above-bed) versus a dip tube (above-bed discharge).

2) Feasibility of the HETF primary burner distributor, including the retractable plug, expansion bellows seal, and relocated lower remote flange (GA Dwg. 1165212002, sheet 1).

3) Feasibility of a gravity-pneumatic pulse solids feeder similar to that used successfully on the 10-cm and 20-cm secondary burners (as a substitute for the existing star valve feeder). Although such a feeder has been tested extensively without success on the 20-cm cold glassware and 20-cm primary burners, there is a greater chance for successful operation in the larger (40-cm) primary burner system.

ACKNOWLEDGEMENTS

The author wishes to acknowledge the help and contribution of the following individuals for data and ideas used in this design evaluation:

Design:	H. H. Yip
Engineering:	N. W. Johanson & R. S. Huston
Purchasing:	J. C. Asbill
Manufacturing:	G. E. Watson & M. E. Pilcher
Quality Assurance:	F. D. Carpenter & G. W. Chandler
Installation:	T. D. Wright & H. H. Yip
Operation:	D. T. Young
Value Engineering:	L. Abraham, R. S. Huston, N. W. Johanson, U. S. Park, H. H. Yip & D. T. Young

REFERENCES

(1) Heller, E. D., Value Management, Addison-Wesley Publishing Co., 1971. pp. 221-223.

(2) Guthrie, K. M., "Capital Cost Estimating," Chemical Engineering, 1968.

(3) GA-A13366, Quarterly Report for the Period Ending Feb. 28, 1975, pp. 4-13 to 4-18.

(4) Memo, REDS:NWJ:34:75, N. W. Johanson to R. D. Zimmerman, "Estimate of Hot Gas Startup Time for 16-inch Primary Burner," Feb. 13, 1975.

(5) EPA-600/7-76-011, "Studies of the Pressurized Fluidized-Bed Coal Combustion Process," Exxon Research & Engineering Co., Sept., 1976, pp. 98-105.

(6) GA-A13546(UC-77), "Interim Development Report for Primary Burning," R. T. Stula, D. T. Young, and H. H. Yip, January 5, 1976, pp. 6-18 to 6-24.

(7) Memo, RDB.JSR/RTS/DTY:373:76, J. S. Rode/R. T. Stula/D. T. Young to R. D. Zimmerman, "Rebuilt 20-cm Primary Burner - Modules 5 & 6 Results," Dec. 10, 1976.

TABLE I

SCOPE OF EVALUATION - DEFINITION OF DESIGN FEATURES

FUNCTION	SUBSYSTEM/ COMPONENT/ PART	FEATURE	SOURCE OF REQUIREMENT				
			PROCESS	REMOTE MAINT.	FACILITY		
					ACCP	GA	HRDF
Allow removal Allow inspection	Heater & shroud Ass'y/upper intake plenum & shroud ass'y.	Separability of cooling shroud (upper & lower sections).		X			
Allow Removal	Ditto	Hinged doors on upper & lower (heater) cooling shrouds.		X		X	
Allow removal	Grafoil sliding Seal	Seal between cooling shroud & vessel.	X	X			
Allow removal Resist pressure	Grayloc connectors: main tube small pipe	Remote disconnect of burner assemblies.		X			
Meet code	Burner tube assembly	Design & fabrication of burner tube assembly per ASME Code, Sect. VIII, Div. 1.			X		
Remove heat Resist pressure	Cooling air shroud	Pressure boundary external to vessel.	X				
Transport fines	Recycle fines equipment	Absence of recycle fines temperature control capability.	X				
Transfer heat	Cyclone/filter, fines hoppers, piping	Waste heat rejection to environment (hot cell temp. limit) (NOTE: Removing heat lengthens startup, i.e. bed heatup).					X
Add heat	Heating subsystem	Method of heating burner (induction vs. CO_2 preheat or "hot gas")	X				

TABLE I (cont)

SCOPE OF EVALUATION - DEFINITION OF DESIGN FEATURES

FUNCTION	SUBSYSTEM/ COMPONENT/ PART	FEATURE	SOURCE OF REQUIREMENT				
			PROCESS	REMOTE MAINT.	FACILITY		
					ACCP	GA	HRDF
Sense temperature	Vessel T/C's	Method & location of T/C attachment.	X				
Resist pressure Reduce leakage	Cyclone	Pressure rating (thickness) of flanges.					X
Transform energy Transfer heat	Susceptor tube	Method of fabrication of susceptor, i.e. welding rolled sheet vs. forging.					(1)
Reduce heat transfer	Ceramic insulation	Type of burner insulation, i.e. ceramic vs. filter.		X			
Reduce heat transfer	Transite	Material of construction for spacer rings.				X	
Allow removal	Insulation bonnet ass'y.	Unitized design vs. "split dome" like 2° burner.		X			
Provide force	vessel tube	Vessel tube length - (NOTE: Should be longer to prevent elutriation).	X				X
TOTAL			6	6	1	2	4

(1) Depends on fabricator

TABLE II

FUNCTIONAL ANALYSIS

INDENTURE LEVEL				IDENTIFICATION	QUANT./ UNIT	COST (PER BURNER)	FUNCTIONAL ANALYSIS						I_v = C/V	I_v x C = $C^2/V \times 10^{-3}$
							DEFINITION				EVALUATION			
							VERB	NOUN	BASIC	SEC.	VALUE	BASIS		
	3			Upper & lower cooling shrouds	2	$ 9,350	Allow	Removal		X	$ 600	Material Cost	16	146
		4		Hinged doors on upper/lower shrouds	2	5,700	Allow	Removal	X		750	Material Cost	7.6	43
			5	Grafoil sliding seal	1	4,300	Allow Resist	Removal Pressure	X	X	1,000	Pair of Hastelloy flanges	4.3	18
		4		Main vessel (Grayloc) flanges	3	80,900	Allow Resist	Removal Pressure	X	X	20,000	Material cost	4.0	324
		4		Small remote(Grayloc) flanges	5	8,800	Allow Resist	Removal Pressure	X	X	2,500	Material cost	3.5	31
	3			Upper & lower cooling shrouds	2	63,100	Transfer	Heat	X		10,000	Internal heat exchanger	6.3	398
1				Heating subsystem	1	86,800	Increase	Temperature	X		25,000	Direct hot gas (CO_2) heating	3.5	304
			5	Vessel T/C's	∿25	1,540	Sense	Temperature	X		25	25 T/C's	62	95
			5	Cyclone flanges	2	100	Allow Resist	Removal Pressure	X	X	100	Material cost	1	0.1
			5	Susceptor	1	3,100	Transfer	Heat	X		10	Value of heat @ $3/$10^6$ BTU	310	961
	3			Ceramic insulator assembly	1	4,800	Reduce	Heat transfer	X		2,000	Cost of 1" fiber insul.	2.4	12
	3			Insulation bonnet assembly	1	1,100	Allow	Removal	X		500	Cost of mat'l. & installation	2.2	2
	3			Vessel tube length	Δ = 6-2/3'	Δ = 3,200	Reduce	Carryover		X	1,200	Internal Baffles	2.7	9

1 Subsystem
2 Equipment
3 Assembly
4 Subassembly
5 Component

TABLE III

BEST OPTIONS FOR DESIGN FEATURES

DESIGN FEATURES	"BEST VALUE" OPTION	"BEST PERFORMANCE" OPTION
1. Cooling shroud separability	Eliminate induction coil; use single, full cooling shroud.	*
2. Hinged doors on: (a) Upper Shroud (b) Lower Plenum	 (a) Eliminate upper shroud (b) Eliminate plenum or *	 * *
3. Sliding seal between burner & cooling shroud.	Use welded shroud (integral with vessel).	Use bellows-loaded face seal
4. Remote disconnects (a) Main vessel flanges (b) Smaller flanges	 (a) Relocate lower flange to a cooler zone. (b) Use modified Tri-clover clamps.	 * *
5. Method of cooling burner	Use internal heat exchanger	*
6. Recycle fines cooling capability	*	Cool and/or redesign rotary valve Design other components for high temperature.
7. Method of waste heat rejection	Cool the equipment rejecting heat to cell.	Cool the equipment rejecting heat to cell.
8. Method of vessel T/C attachment	Spring-loaded T/C's	*
9. Method of fabrication of susceptor	Indeterminate at this time.	Indeterminate at this time.
10. Burner length	*	Provide an enlarged section at the top of the burner.
11. Type of burner insulation	Fiber insulation	*
12. Method of heating burner	Hot gas (CO_2) preheat	*
13. Type of bonnet assembly	*	*

* Present Design

TABLE IV

BEST VALUE INTEGRATED BURNER SYSTEM DESIGN CONCEPT

Method of Cooling Burner - Internal Heat Exchanger

- Eliminate external shroud
- Eliminate hinged doors
- Eliminate sliding seal
- Eliminate insulation bonnet assembly

Method of Heating Burner - Hot Gas (CO_2) Preheat

- Eliminate induction heating system
- Eliminate susceptor
- Use cheaper external insulation (fiber) to reduce heat loss to cell only

Remote Disconnects

Main vessel flanges:

- Eliminate top flange & remote clamp (46-cm)
- Relocate lower 36-cm remote flange to cooler zone below distributor
- Eliminate 36-cm swing-bolt connection

Smaller flanges:

- Eliminate Grayloc disconnects
- Use modified Tri-Clover clamps

Miscellaneous Features

- Add cooling jackets to cyclone, off-gas filter, & fines hopper
- Cool or redesign fines rotary valve for higher temperature
- Use spring-loaded thermocouples on vessel tube
- Use existing burner length. If tests confirm unacceptably high particle carryover, add an enlarged section to the top of the burner.

TABLE V

MINIMUM RISK INTEGRATED BURNER SYSTEM DESIGN CONCEPT

Method of Cooling Burner - Existing System

- Retain external shroud
- Modify external shroud design to provide for single shroud (similar to HETF design). Alter maintenance procedures for removal of burner and induction coil.
- Eliminate hinged doors
- Eliminate sliding seal
- Retain existing "unitized" insulation bonnet assembly

Method of Heating Burner - Existing System

- Retain induction heating subsystem
- Retain susceptor (investigate methods of fabrication for HRDF burner)
- Use fiber (WRP-X) insulation for induction heating coil

Remote Disconnects

Main vessel flanges:

- Eliminate top flange and remote clamp (46-cm)
- Relocate lower 36-cm remote flange to cooler zone below distributor
- Eliminate 46-cm swing-bolt connection

Smaller flanges

- Eliminate Grayloc disconnects
- Use modified Tri-Clover clamps

Miscellaneous Features

- Add cooling jackets to cyclone, off-gas filter, & fines hopper
- Cool or redesign fines rotary valve for higher temperature
- Use spring-loaded thermocouples on vessel tube
- Use existing burner length. If tests confirm unacceptably high particle carryover, add an enlarged section to the top of the burner.

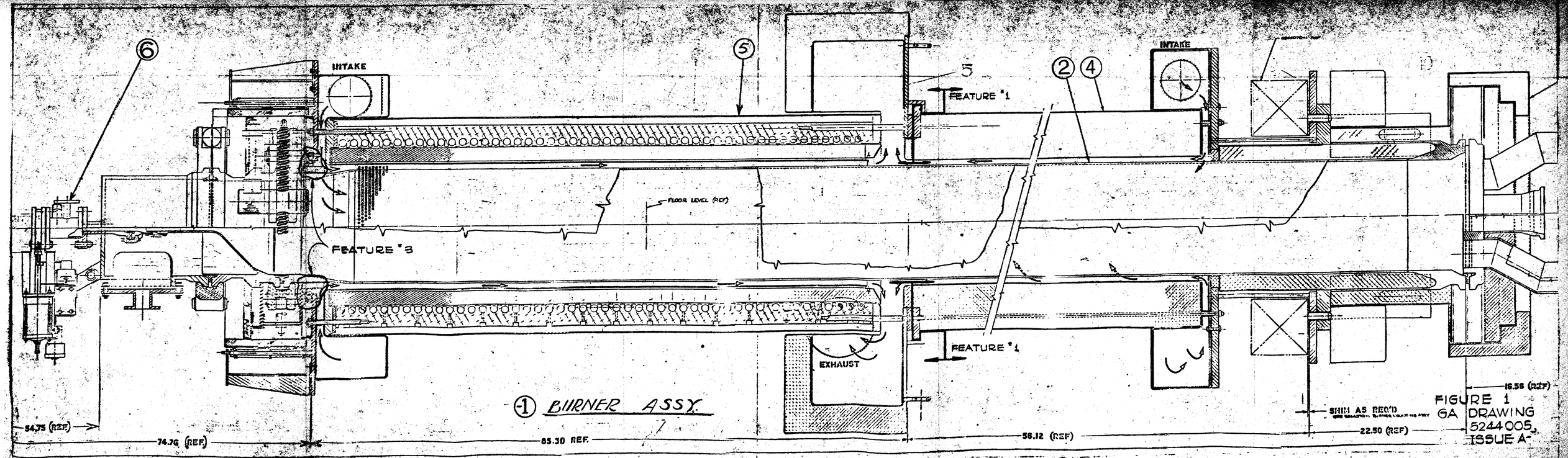

FIGURE 1
GA DRAWING
5244005,
ISSUE A

Figure 2

DESIGN FEATURE #1 OPTIONS

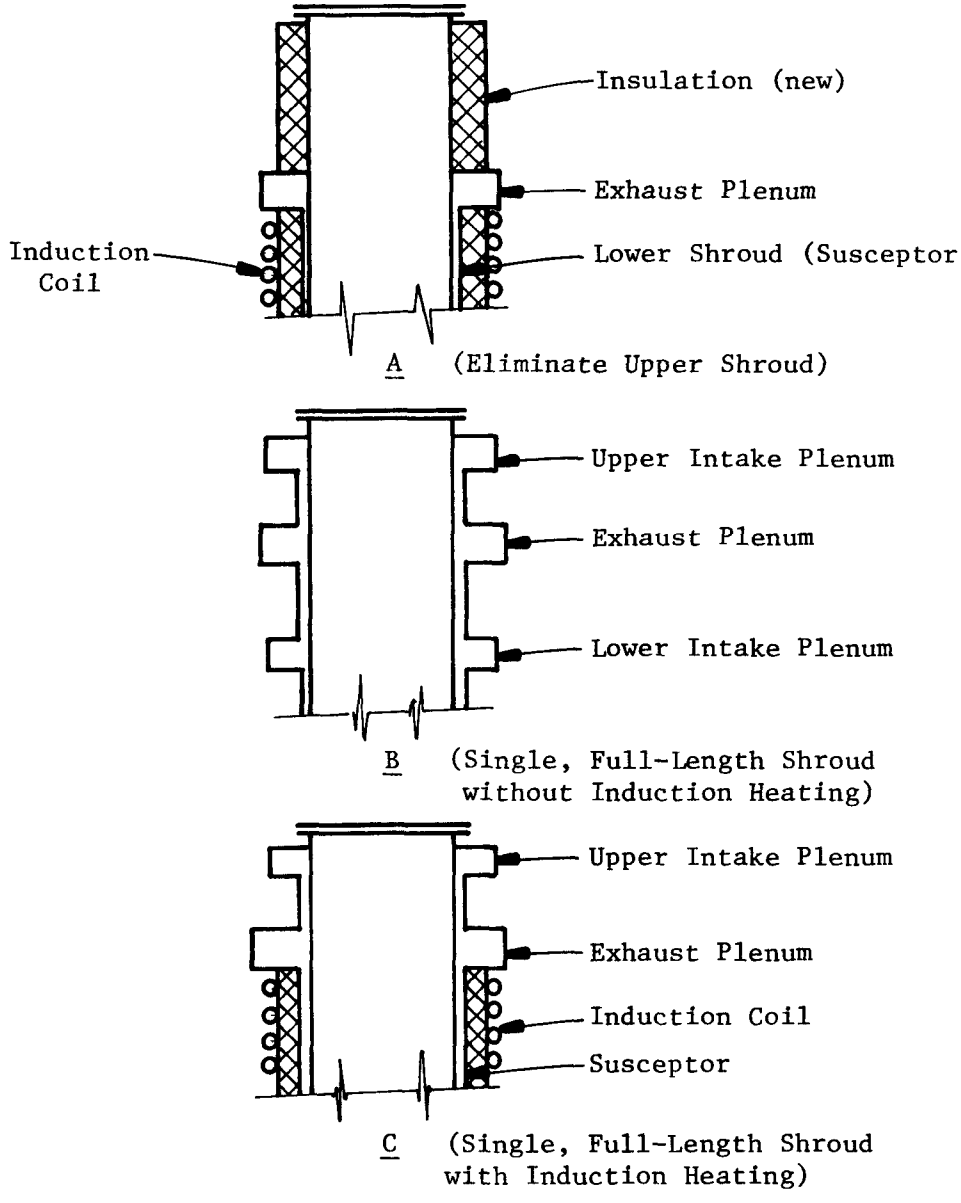

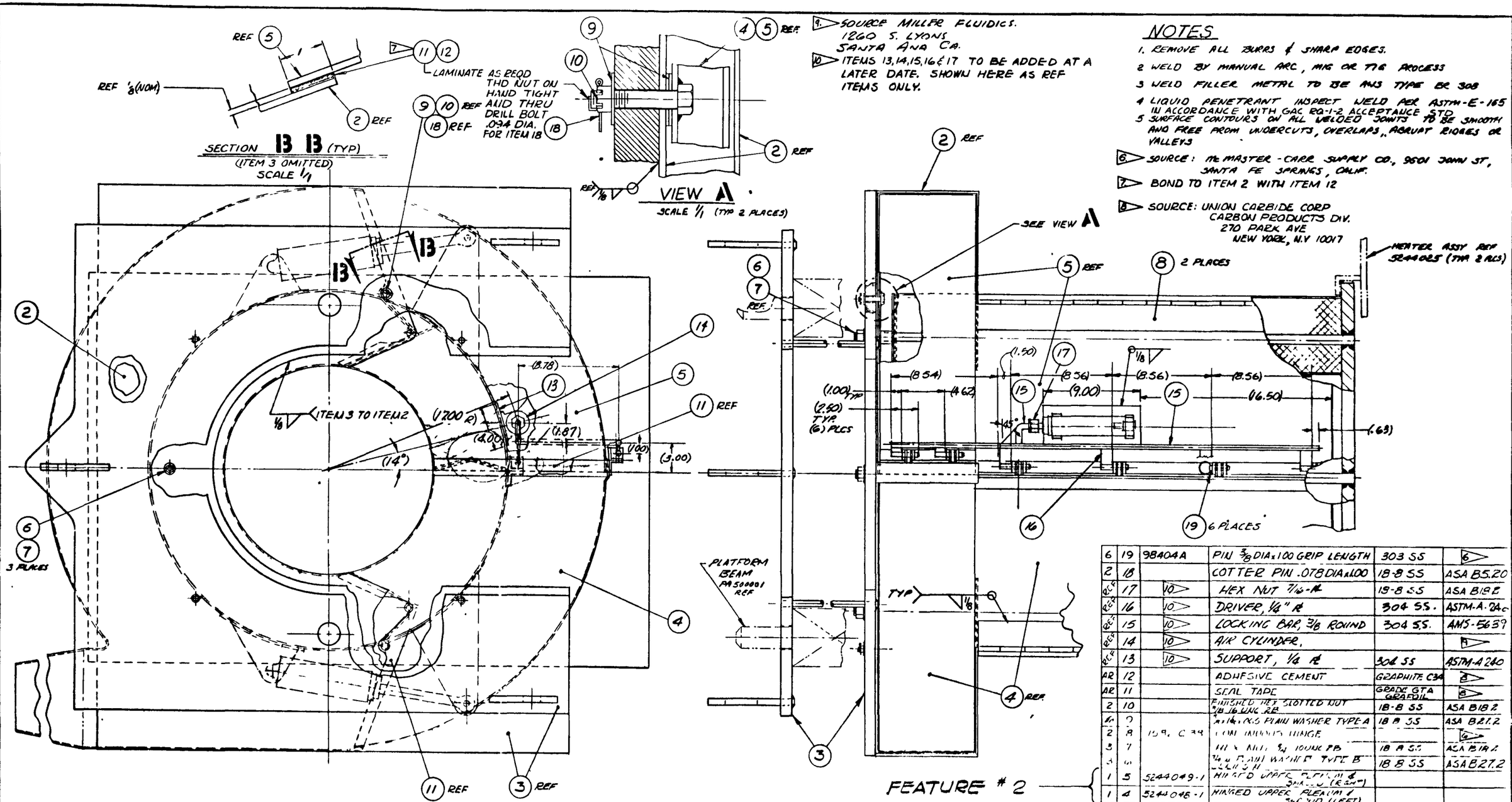

9. SOURCE MILLER FLUIDICS. 1260 S. LYONS SANTA ANA CA.

10. ITEMS 13,14,15,16 & 17 TO BE ADDED AT A LATER DATE. SHOWN HERE AS REF ITEMS ONLY.

NOTES

1. REMOVE ALL BURRS & SHARP EDGES.
2. WELD BY MANUAL ARC, MIG OR TIG PROCESS
3. WELD FILLER METAL TO BE AWS TYPE ER 308
4. LIQUID PENETRANT INSPECT WELD PER ASTM-E-165 IN ACCORDANCE WITH GAC RQ-1-2 ACCEPTANCE STD.
5. SURFACE CONTOURS ON ALL WELDED JOINTS TO BE SMOOTH AND FREE FROM UNDERCUTS, OVERLAPS, ABRUPT RIDGES OR VALLEYS
6. SOURCE: McMASTER-CARR SUPPLY CO., 9501 JOHN ST, SANTA FE SPRINGS, CALIF.
7. BOND TO ITEM 2 WITH ITEM 12
8. SOURCE: UNION CARBIDE CORP CARBON PRODUCTS DIV. 270 PARK AVE NEW YORK, N.Y. 10017

(-1) UPPER INTAKE PLENUM & SHROUD ASSY.

	ITEM	PART NO	DESCRIPTION	MATL	SPEC
6	19	98404A	PIN 3/8 DIA x 1.00 GRIP LENGTH	303 SS	6
2	18		COTTER PIN .078 DIA x 1.00	18-8 SS	ASA B5.20
REF	17	10	HEX NUT 7/16-14	18-8 SS	ASA B18.2
REF	16	10	DRIVER, 1/4" ø	304 SS.	ASTM-A-240
REF	15	10	LOCKING BAR, 3/8 ROUND	304 SS.	AMS-5639
REF	14	10	AIR CYLINDER,		9
REF	13	10	SUPPORT, 1/4 ø	304 SS	ASTM-A 240
AR	12		ADHESIVE CEMENT	GRAPHITE C34	8
AR	11		SEAL TAPE	GRADE GTA GRAFOIL	8
2	10		FINISHED HEX SLOTTED NUT 3/8-16 UNC 2B	18-8 SS	ASA B18.2
4	9		3/8 x 1/16 x .065 PLAIN WASHER TYPE A	18-8 SS	ASA B27.2
2	8	159, C39	CONTINUOUS HINGE		6
3	7		HEX NUT 3/4 10UNC 2B	18-8 SS	ASA B18.2
3	6		3/4 in PLAIN WASHER TYPE B	18-8 SS	ASA B27.2
1	5	5244049-1	HINGED UPPER PLENUM & SHROUD (RIGHT)		
1	4	5244048-1	HINGED UPPER PLENUM & SHROUD (LEFT)		
1	3	5244047-1	MODIFYING PLATE ASSY.		
1	2	5244046-1	FIXED UPPER PLENUM & SHROUD		
1	1	5244045-1	UPPER PLENUM & SHROUD ASSY		
-1	ITEM	PART NO	DESCRIPTION	MATL	SPEC

LIST OF MATERIAL

REQD/ASSEMBLY

UNLESS OTHERWISE SPECIFIED DIMENSIONS ARE IN INCHES. TOLERANCES. DECIMALS XXX ± .015 XX ± .03 FRACTIONS ± 1/32 ANGLES ± 1° 250 ALL MACHINED SURFACES

NEXT ASSY 5244005

PROPRIETARY INFORMATION THIS DOCUMENT IS THE PROPERTY OF GENERAL ATOMIC CO AND WILL BE RETURNED UPON REQUEST OR WHEN NO LONGER NEEDED BY THE RECIPIENT. INFORMATION CONTAINED HEREIN MAY NOT BE COMMUNICATED TO OTHERS NOR MAY THE DOCUMENT BE COPIED IN WHOLE OR IN PART WITHOUT THE EXPRESS CONSENT OF GENERAL ATOMIC CO.

SCALE 1/4 & NOTED

FIGURE 3

UPPER INTAKE PLENUM & SHROUD ASSY. - FLUID BED, 16 in. PRIMARY BURNER

GENERAL ATOMIC COMPANY
SAN DIEGO CALIFORNIA

DRAWING NUMBER	ISSUE
852 5244045	A

LTR	DATE	ISSUE DESCRIPTION	DR	CHK.	DES.	APPD	APPD
A	7/24/75	APPVD. FOR CONSTRUCTION	NJA 5/27/75	RK	PMT	NDF 4/24/75	

APPROVALS DATE
STRUCTURAL Nuff 4-2-75
MATERIAL
WELDING

852 5244045 A

SHEET 1 OF 1

NOTES: CONT'D.

3.

4. DIMENSIONS & TOLERANCES PER ANSI Y14.5
5. REMOVE ALL BURRS AND SHARP EDGES.
6. SOURCE: STANDARD PRESSED STEEL CO.
3235 McGRAW
SAN DIEGO, CA. 92117

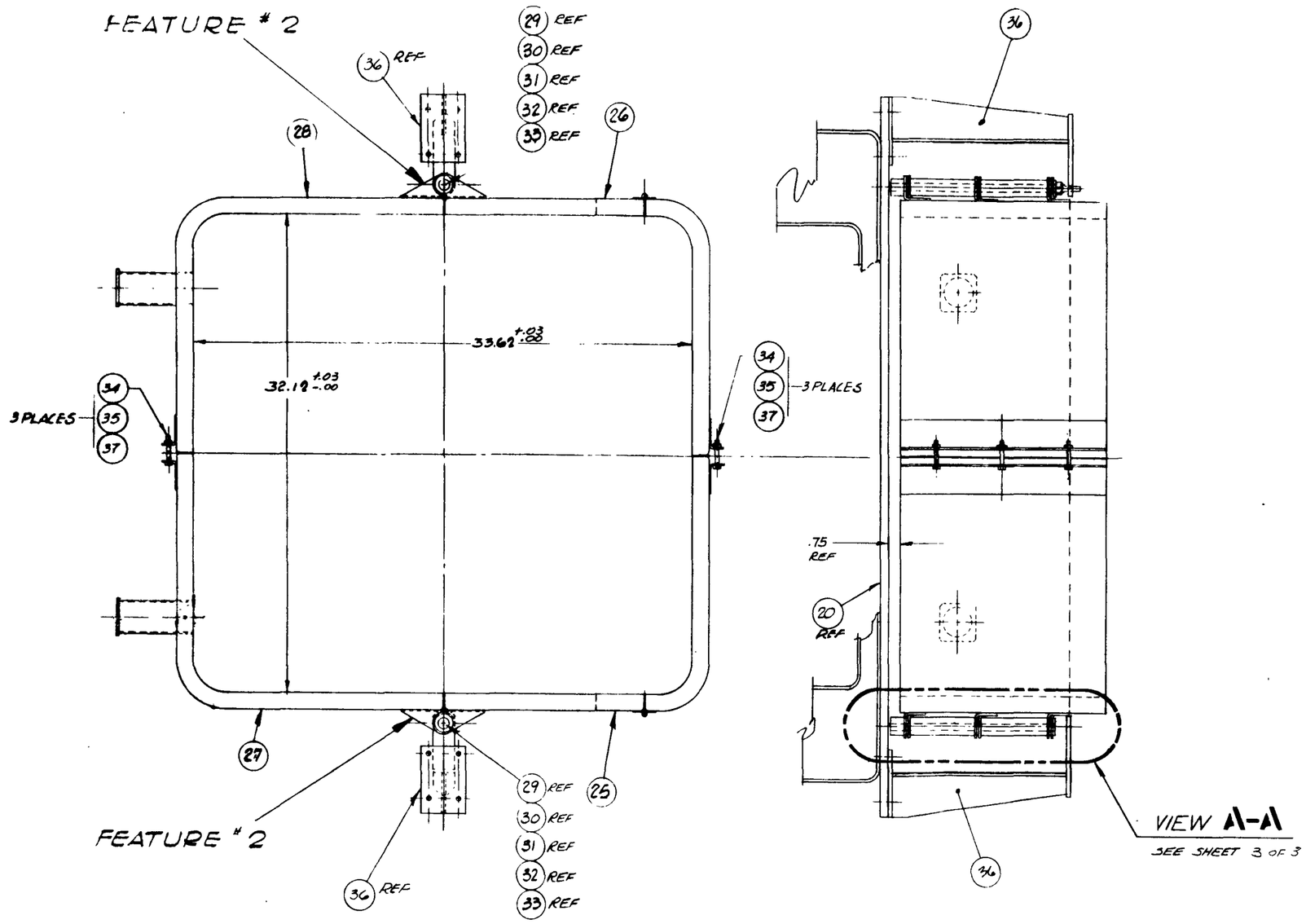

(24) SHROUD ASSEMBLY

FIGURE 4

ITEM	PART NO.	DESCRIPTION	MATL
		LIST OF MATERIAL	

LTR	DATE	ISSUE DESCRIPTION	DR	CHK.	DES.	APPD.	APPD.
B		SEE ECN # 0012700236			8-27-76 HAY		
A		APPD FOR CONSTRUCTION					

APPROVALS DATE
STRUCTURAL
MATERIAL
WELDING

REQD/ASSEMBLY

UNLESS OTHERWISE SPECIFIED DIMENSIONS ARE IN INCHES.
TOLERANCES:
DECIMALS XXX± .015 XX± .03
FRACTIONS ± 1/32
ANGLES ± 1/2°
ALL MACHINED SURFACES 250

NEXT ASSY 5244005

PROPRIETARY INFORMATION
THIS DOCUMENT IS THE PROPERTY OF GENERAL ATOMIC CO. AND WILL BE RETURNED UPON REQUEST OR WHEN NO LONGER NEEDED BY THE RECIPIENT. INFORMATION CONTAINED HEREIN MAY NOT BE COMMUNICATED TO OTHERS NOR MAY THE DOCUMENT BE COPIED IN WHOLE OR IN PART WITHOUT THE EXPRESS CONSENT OF GENERAL ATOMIC CO.

SCALE 1/4 & NOTED

HEATER & SHROUD ASSY — FLUID BED, 16 IN. PRIMARY BURNER

GENERAL ATOMIC COMPANY
SAN DIEGO, CALIFORNIA

DRAWING NUMBER		ISSUE
852	5244025	5

QUAL LEVEL _ APPROVAL LEVEL I SHEET 2 OF 3

852 5244025 C

NOTES:
1. ALL SEALS HUBS & CLAMPS TO BE PROVIDED BY GRAY TOOL CO. 7135 ARDMORE STREET, HOUSTON TEXAS 77001

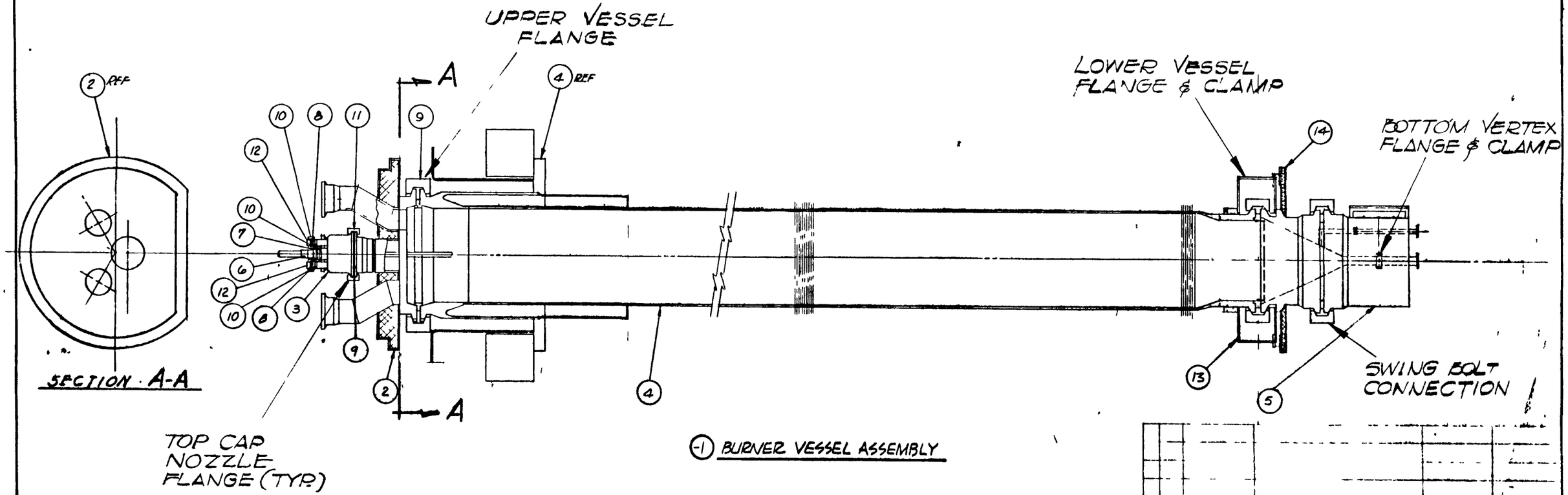

REQD/ASSEMBLY	ITEM	PART NO	DESCRIPTION	MATL	
1	14	5244065-1	SHROUD PLATE ASSY		
1	13	I-4539	14 in GRAYLOC REMOTE CLAMP		
2	12	GR 11	GRAYLOC 1" BLIND HUB	316 SS	
1	11	48003	GRAYLOC 5" CLAMP	CF8M	
3	10	49928	GRAYLOC 1" CLAMP	CF8M	
1	9	SIZE 32	GRAYLOC SEAL RING	A286 SS	PT-605
2	8	SIZE 11	GRAYLOC SEAL RING	A286 SS	PT-605
1	7	SIZE 7	GRAYLOC SEAL RING	A286 SS	PT-605
1	6	5241018-1	THERMOWELL PROBE		
1	5	5244010-1	SPOOL ASSY		
1	4	5211000-1	BURNER TUBE ASSY		
1	3	5[illegible]	THERMOCOUPLE FLANGE		
1	2	[illegible]4061-1	CAP INSULATOR ASSY		
1	[illegible]	[illegible]	BURNER [illegible]		
-1					

LIST OF MATERIAL

APPROVALS — DATE
STRUCTURAL NWJ 1 4 75
MATERIAL
WELDING

LTR	DATE	ISSUE DESCRIPTION	DR	CHK	DES	APPD	APPD
	8/5/76	APPD FOR CONST	RSD				

UNLESS OTHERWISE SPECIFIED DIMENSIONS ARE IN INCHES. TOLERANCES. DECIMALS XXX± .XX± FRACTIONS ± ANGLES ± ALL MACHINED SURFACES ✓

NEXT ASSY 5244005

PROPRIETARY INFORMATION THIS DOCUMENT IS THE PROPERTY OF GENERAL ATOMIC CO AND WILL BE RETURNED UPON REQUEST OR WHEN NO LONGER NEEDED BY THE RECIPIENT. INFORMATION CONTAINED HEREIN MAY NOT BE COMMUNICATED TO OTHERS NOR MAY THE DOCUMENT BE COPIED IN WHOLE OR IN PART WITHOUT THE EXPRESS CONSENT OF GENERAL ATOMIC CO.

SCALE 1/8

FIGURE 5

BURNER VESSEL ASSY
FLUID BED
16" PRIMARY BURNER

GENERAL ATOMIC COMPANY
SAN DIEGO CALIFORNIA

DRAWING NUMBER	ISSUE
852 5244006	A

SHEET 1 OF 1

852 5244006 A

Figure 6

METHODS OF COOLING BURNER

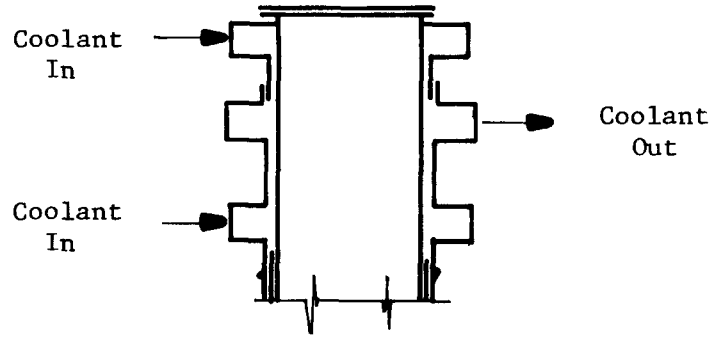

Present Design

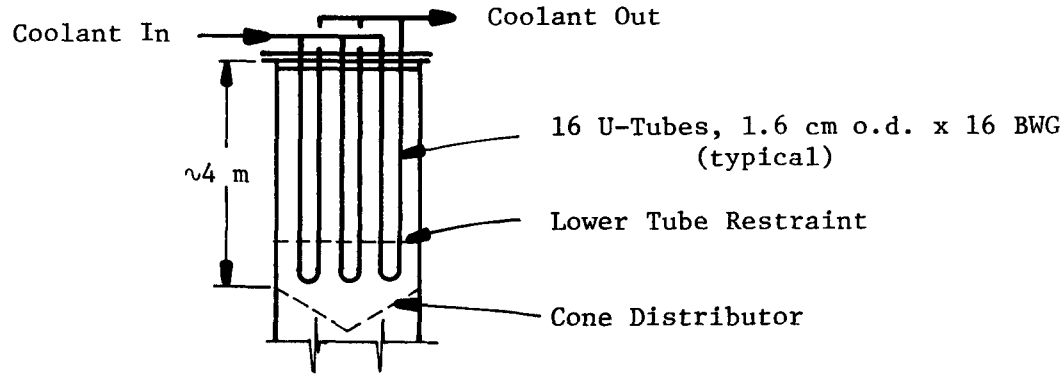

A (Internal Heat Exchanger)

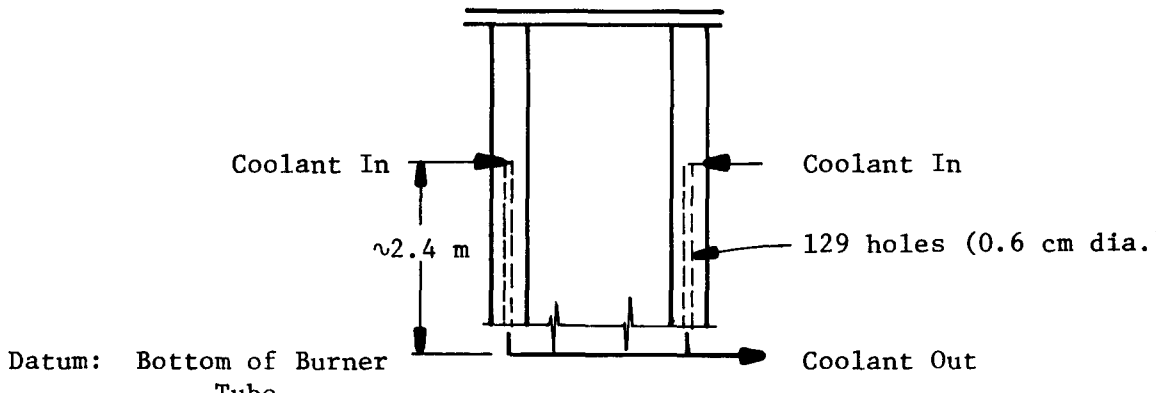

B (Coolant Holes in Burner Wall)

NOTES

1. REMOVE ALL BURRS & SHARP EDGES.
2. DIMENSIONS & TOLERANCES PER ANSI Y14.5.
3. WELD BY MANUAL ARC, MIG OR TIG PROCESS.
4. RADIOGRAPH INSPECT WELDS PER ASTM E 94
5. BUTT WELDS TO BE 100% FULL PENETRATION

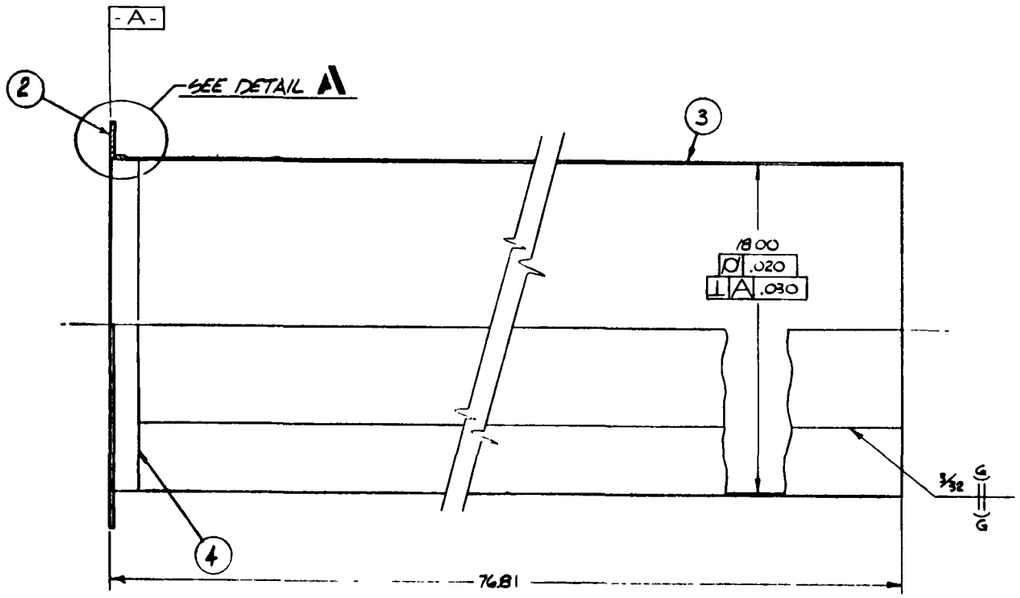

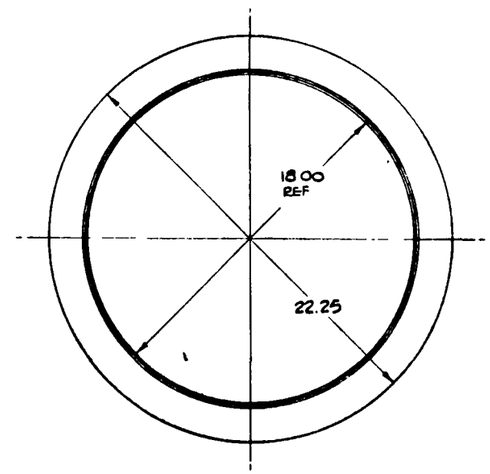

(-1) SUSCEPTOR TUBE ASSY

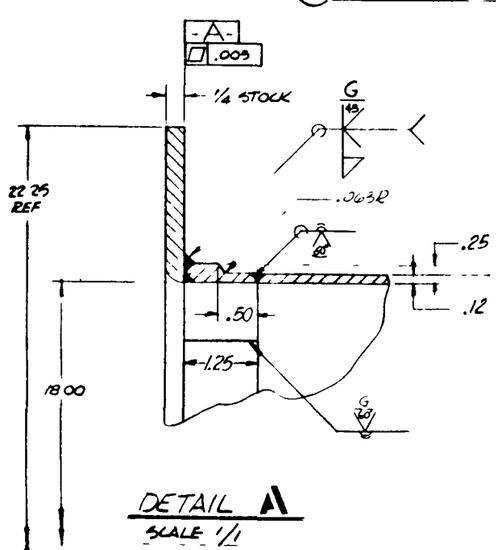

DETAIL A
SCALE 1/1

REQD/ASSEMBLY	ITEM	PART NO	DESCRIPTION	MATL	
1	4	5244028-4	COLLAR, 1/4 PLATE	ROLLED ALLOY 333	ANS-5593
1	3	[illegible]	TUBE 120 SHEET	ROLLED ALLOY 333	ANS-5.33
1	2	[illegible]	SUPPORT RING 1/4 PLATE	ROLLED ALLOY 333	ASM REQR
-1	1	5244028	SUSCEPTOR TUBE ASSY		

LIST OF MATERIAL

LTR	DATE	ISSUE DESCRIPTION	DR	CHK	DES.	APPD	APPD
B	9/16	SEE ECN # 00112	[illegible]	EBR HF	HHY	RDZ 4/4/75	[illegible]
A	1/14/75	APPVD FOR CONSTRUCTION	CK 3/6/74				

APPROVALS — DATE
STRESS ANAL NWJ 4-4-75
PROD RELEASED
WELDING

UNLESS OTHERWISE SPECIFIED DIMENSIONS ARE IN INCHES
TOLERANCES
DECIMALS XXX ± .5 XX ± .03
FRACTIONS ± 1/32
ANGLES ± 2°
ALL MACHINED SURFACES 250

NEXT ASSY 5244025

PROPRIETARY INFORMATION
THIS DOCUMENT IS THE PROPERTY OF GENERAL ATOMIC CO AND WILL BE RETURNED UPON REQUEST OR WHEN NO LONGER NEEDED BY THE RECIPIENT. INFORMATION CONTAINED HEREIN MAY NOT BE COMMUNICATED TO OTHERS NOR MAY THE DOCUMENT BE COPIED IN WHOLE OR IN PART WITHOUT THE EXPRESS CONSENT OF GENERAL ATOMIC CO.

SCALE 1/4 & NOTED

FIGURE 7
SUSCEPTOR TUBE
FLUID BED
16IN PRIMARY BURNER

GENERAL ATOMIC COMPANY
SAN DIEGO CALIFORNIA

DRAWING NUMBER	ISSUE
852 5244028	B

QUAL LEVEL — APPROVAL LEVEL 1 SHEET 1 OF 1

852 5244028 B

GENERAL NOTES

1. REMOVE BURRS & SHARP EDGES
2. DIMENSIONING, TOLERANCING, POSITION & FORM SYMBOLS PER ANSI Y-14.5
3. MAT'L: FUSED SILICA CAST FOAM 90
4. SOURCE: GLASROCK PRODUCTS, INC. 2210 MARIETTA BLVD. N.W. ATLANTA, GA. 30318 (SUPPLIED BY GAC)
5. FABRICATOR TO PROVIDE ITEM 1 WITH END CONFIGURATIONS AS SHOWN.

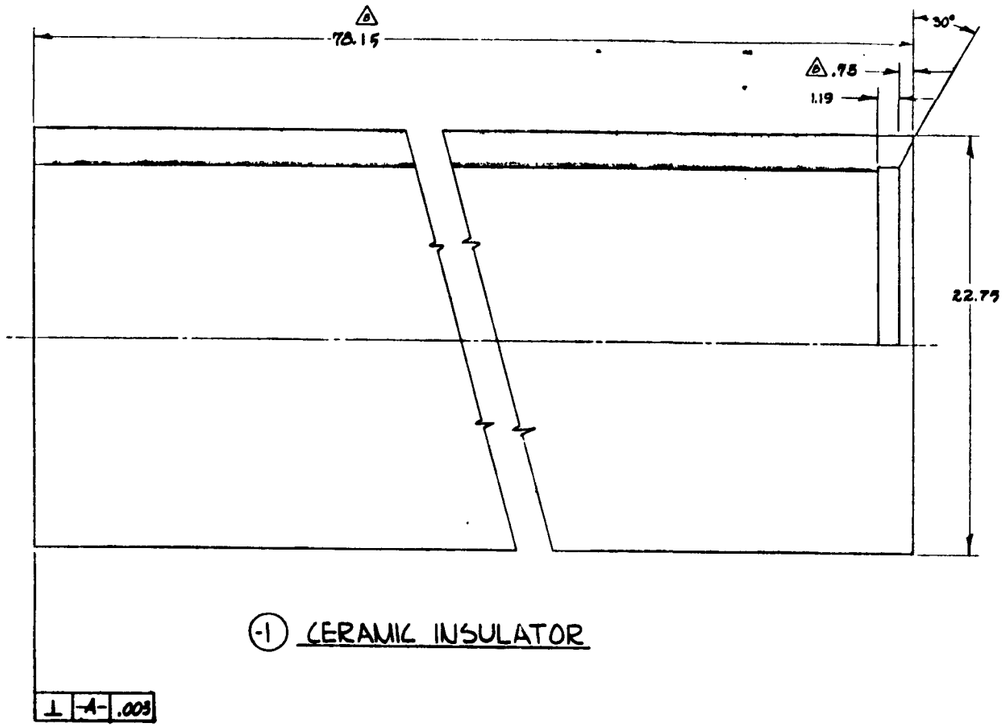

(-1) CERAMIC INSULATOR

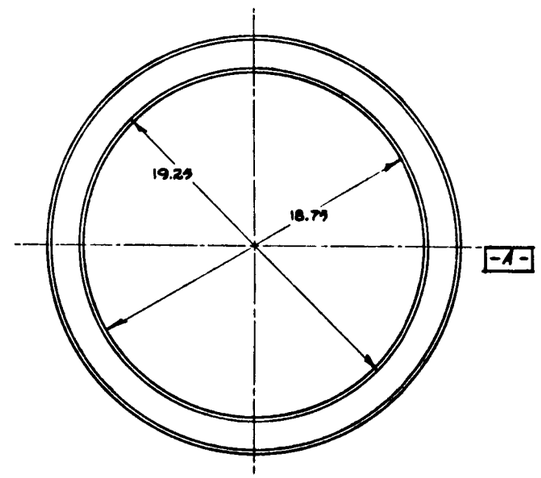

ITEM	PART NO	DESCRIPTION	MATL	SPEC
1	5244027-1	CERAMIC INSULATOR	3	4

REQD/ASSEMBLY: -1

LIST OF MATERIAL

APPROVALS — DATE
THIRAL — 3/20/75
MATERIAL
WELDING
RDD | RELEASED

LTR	DATE	ISSUE DESCRIPTION	DR	CHK.	DES.	APPD.	APPD.
B	5/2/75	APR ECN 00922					
A	9/16/75	APP'D FOR CONSTRUCTION					

UNLESS OTHERWISE SPECIFIED DIMENSIONS ARE IN INCHES. TOLERANCES. DECIMALS .XXX ± .XX ± .02 FRACTIONS ± ANGLES ± 1° ALL MACHINED SURFACES ✓

NEXT ASS'Y 5244025

PROPRIETARY INFORMATION — THIS DOCUMENT IS THE PROPERTY OF GENERAL ATOMIC CO AND WILL BE RETURNED UPON REQUEST OR WHEN NO LONGER NEEDED BY THE RECIPIENT. INFORMATION CONTAINED HEREIN MAY NOT BE COMMUNICATED TO OTHERS NOR MAY THE DOCUMENT BE COPIED IN WHOLE OR IN PART WITHOUT THE EXPRESS CONSENT OF GENERAL ATOMIC CO.

SCALE 1/4 & NOTED

FIGURE 8

CERAMIC INSULATOR FLUID BED, 16 IN. PRIMARY BURNER

GENERAL ATOMIC COMPANY
SAN DIEGO, CALIFORNIA

DRAWING NUMBER		ISSUE
352	5244027	B

QUAL LEVEL — APPROVAL LEVEL 1 SHEET 1 OF 1

352 5244027 B

RELEASED

45

Figure 9

METHODS OF HEATING BURNER

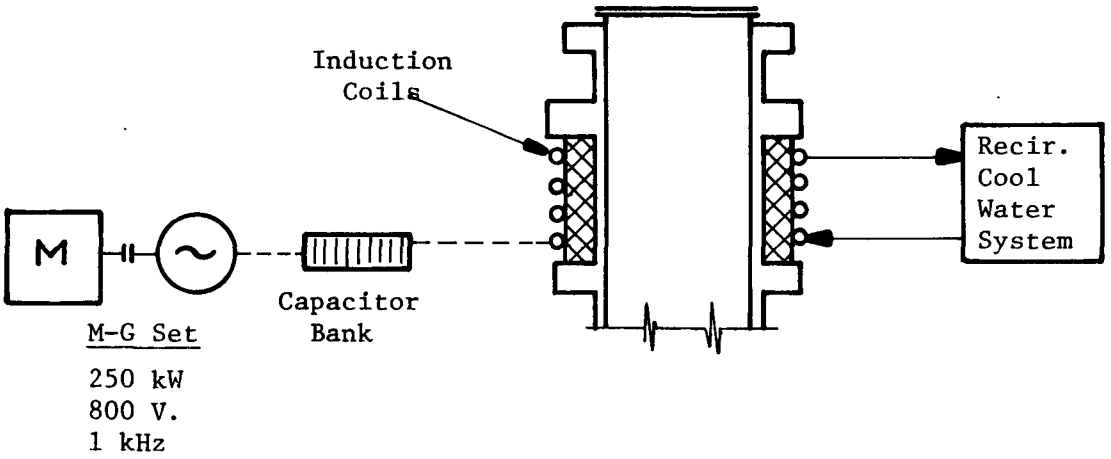

PRESENT DESIGN

(Induction Heating)

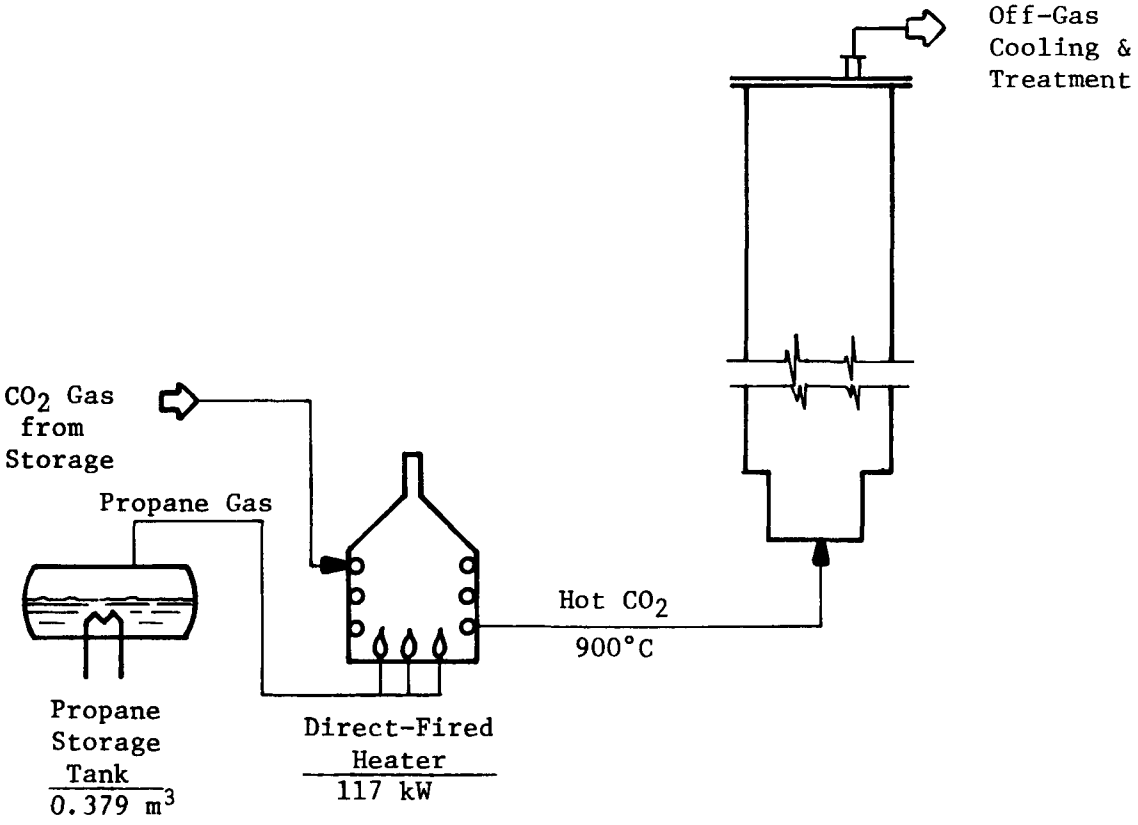

ALTERNATIVE: HOT GAS HEATING

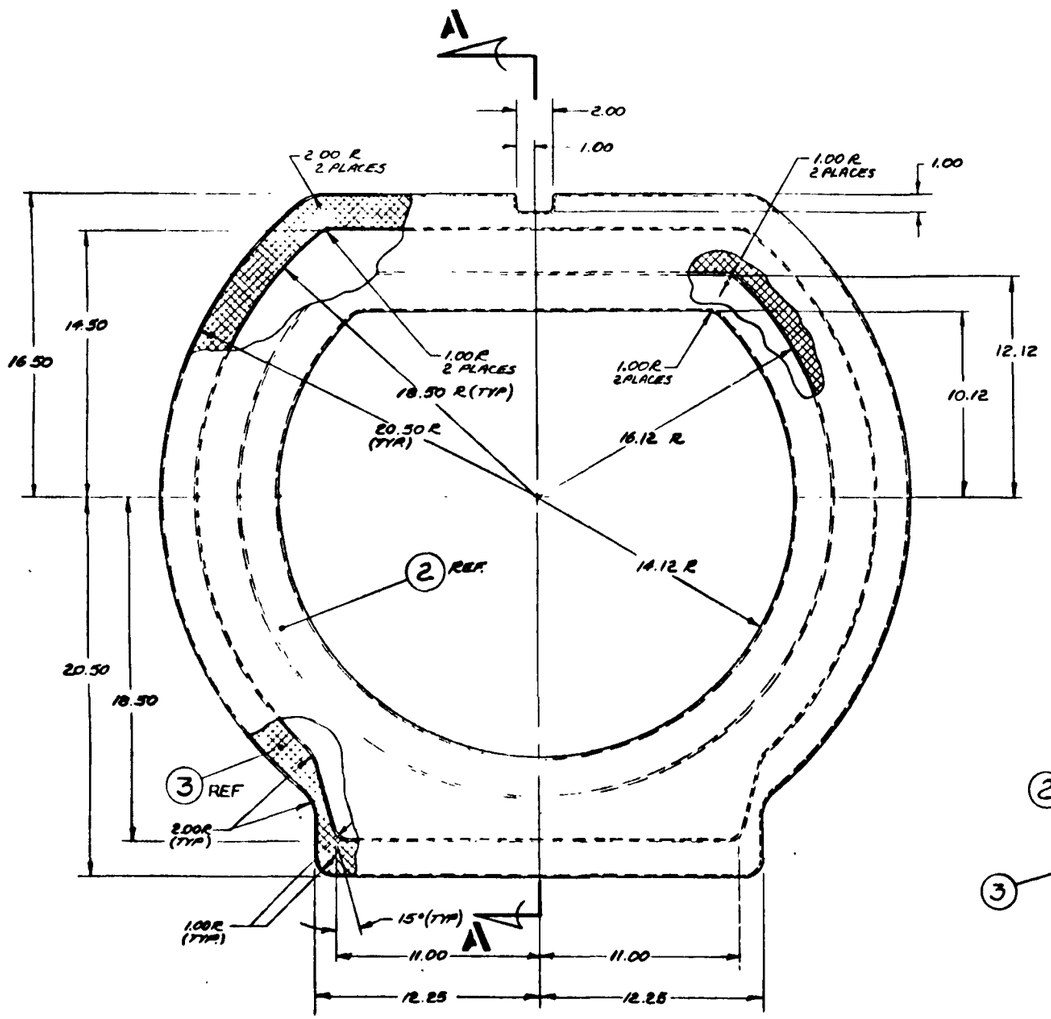

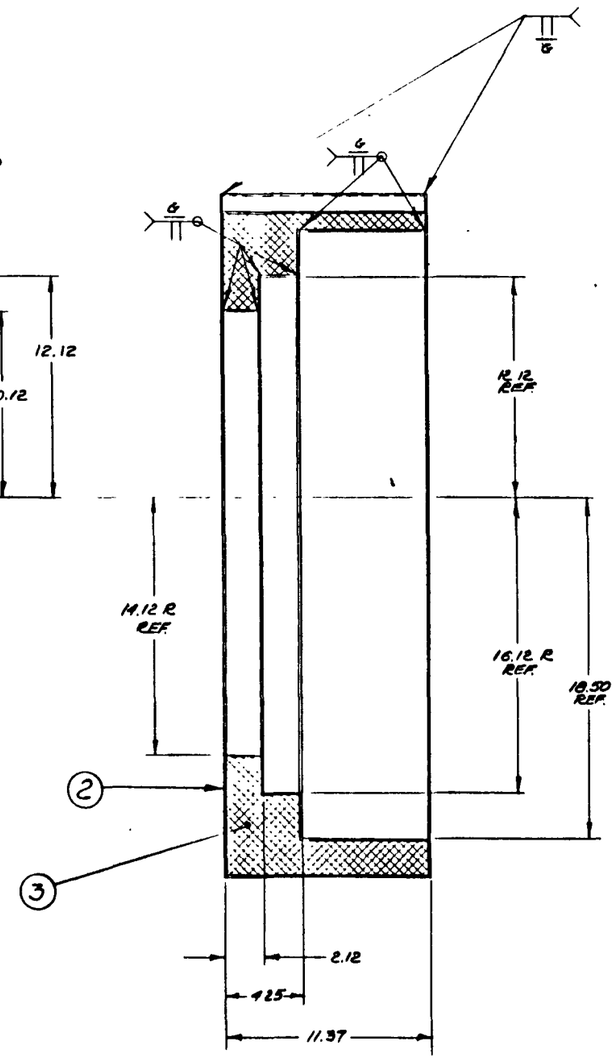

SECTION A-A

(-1) INSULATION BONNET ASSEMBLY

NOTES:

1. DIMENSIONING & TOLERANCING PER ANSI Y14.5
2. REMOVE ALL BURRS & SHARP EDGES.
3. WELD BY MANUAL ARC, MIG OR TIG PROCESS.
4. BUTT WELDS TO BE 100% FULL PENETRATION.
5. WELDS TO BE LIQUID PENETRANT INSPECTED PER ASTM-E165 IN ACCORDANCE WITH GAC RQ-1-2 ACCEPTANCE STD
6. WELD FILLER MATERIAL SHALL BE AWS-A5.9 TYPE ER308
7. SURFACE CONTOURS ON ALL WELDED JOINTS TO BE SMOOTH & FREE FROM UNDERCUTS, OVERLAPS, ABRUPT RIDGES OR VALLEYS
8.

9 SOURCE: REFRACTORY PRODUCTS CO., 500 N. CENTRAL RD. MT. PROSPECT, ILLINOIS 60056. (SUPPLIED BY GENERAL ATOMIC CO.)

AR	3	14RP-X-AQ	INSULATION	9	
1	2	5244064-2	INSWIFT 048 SHEET	304 SS	ASTM-A-24
	1	5244063 1	INSULATION BONNET ASSY		
-1	ITEM	PART NO.	DESCRIPTION	MATL	SPEC

REQD/ASSEMBLY — LIST OF MATERIAL

UNLESS OTHERWISE SPECIFIED DIMENSIONS ARE IN INCHES. TOLERANCES DECIMALS .XX ± .05 .XX ± .03 FRACTIONS ± 1/32 ANGLES ± 1/2° ALL MACHINED SURFACES 250√

NEXT ASSY. 5244005

PROPRIETARY INFORMATION. THIS DOCUMENT IS THE PROPERTY OF GENERAL ATOMIC CO AND WILL BE RETURNED UPON REQUEST OR WHEN NO LONGER NEEDED BY THE RECIPIENT. INFORMATION CONTAINED HEREIN MAY NOT BE COMMUNICATED TO OTHERS NOR MAY THE DOCUMENT BE COPIED IN WHOLE OR IN PART WITHOUT THE EXPRESS CONSENT OF GENERAL ATOMIC CO.

SCALE 1/4

FIGURE 10

INSULATION BONNET ASSY.- FLUID BED, 16 IN. PRIMARY BURNER

GENERAL ATOMIC COMPANY
SAN DIEGO, CALIFORNIA

DRAWING NUMBER		ISSUE
852	5244063	A

SHEET 1 OF 1

LTR	DATE	ISSUE DESCRIPTION	DR	CHK.	DES.	APPD	APPD.
A	8/21/75	APPVD. FOR CONSTRUCTION	NJA 8-21-75				

APPROVALS — DATE
STRUCTURAL Nuit 8-8-75
MATERIAL
WT DWG

852 5244063 A

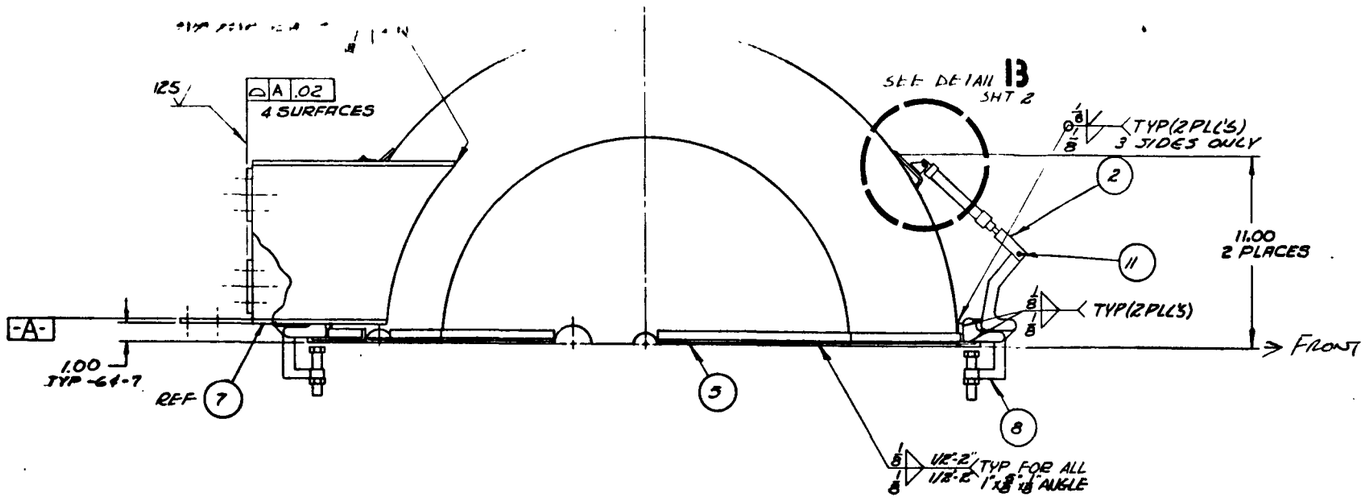

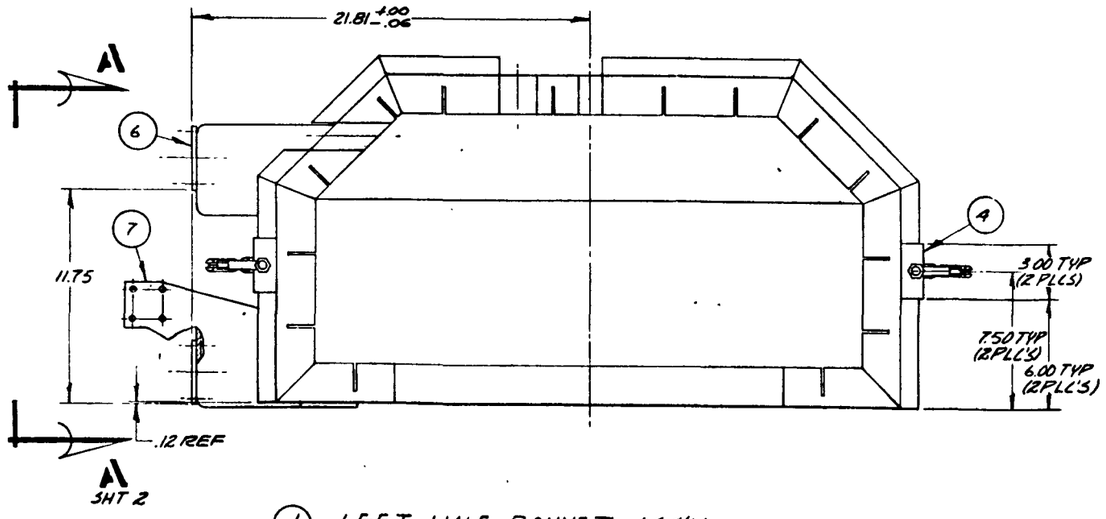

(-1) LEFT HALF BONNET ASS'Y

NOTES

1. NUCLEAR [illegible] PER ASTM-[illegible]
2. REMOVE ALL BURRS & SHARP EDGES
3. WELD BY MANUAL ARC GMA OR GTA PROCESS
4. WELD FILLER METAL TO BE AWS-A5.9 TYPE ER 308
5. SURFACE CONTOURS OF ALL WELDS TO BE SMOOTH & FREE FROM [illegible]
6. LIQUID PENETRANT CONSIST WELDS PER ASTM-E-165 WITH ACCEPTANCE STD PER APPENDIX VIII, SECT VIII OF ASME BOILER & PRESSURE VESSEL CODE
7. SOURCE: BIMBA MFG. CO. MONEE, ILLINOIS 60449
8. SOURCE: ALL STAINLESS INC. 75 RESEARCH RD. HINGHAM, MA. 02043

						8	15		SCR HEX HD #8-32 UNC-2A X 3/4 LG	18-8 SS	COMML
						AR	14	5247040 -14	STIFFENER 1 x 5/8 x 1/8 ANGLE	304 SS	ASTM A-276
						8	13		#8 EXTERNAL TOOTH LOCK WASHER	18-8 SS	ASTM-B-271-76
						8	12		8-32 UNC-2B HEX NUT	18-8 SS	COMM'L
						2	11	250-0625 MDP	SPIROL PIN .25 DIA	302 SS	7
						2	10	D-780	PIVOT BRACKET (PAIR)		7
						2	9	0125-DP	AIR CYLINDER (VITON A "U" CUPS)		7
						2	8	5247057 -1	MODIFIED CLAMP ASSY		
						1	7	5247044 -1	LEFT LOWER SUPPORT BRACKET		
						1	6	5247048 -1	LEFT UPPER SUPPORT BRACKET		
						1	5	5247042 -1	INSULATION COLLET, LEFT HALF		
						2	4	5247040 -4	CLAMP MOUNT [illegible] ANGLE	304 SS	ASTM-A-276
						2	3	5247040 -3	CYLINDER MOUNT 1/8 SHEET	304 SS	ASTM-A-240
						2	2	5247040 -2	CLEVIS 625 DIA ROD	304 SS	ASTM-A-276
								5247040 -1	LEFT HALF BONNET ASSY		
						-1	ITEM	PART NO.	DESCRIPTION	MATL	

REQD/ASSEMBLY — LIST OF MATERIAL

LTR	DATE	ISSUE DESCRIPTION	DR	CHK.	DES.	APPD.	APPD.
A	9-10-81	APP'D FOR CONSTRUCTION	DLJ 8-6-75	[illegible] 8-13-75	DP 8-14-75		REV 9-10-75

UNLESS OTHERWISE SPECIFIED DIMENSIONS ARE IN INCHES.
TOLERANCES:
DECIMALS XXX± .010 XX± .03
FRACTIONS ± 1/32
ANGLES ± 1°
ALL MACHINED SURFACES 250

NEXT ASS'Y
5247095

SCALE 1/4 NONE

EST. WT -

FIGURE 11

LEFT HALF BONNET ASS'Y-8in SECONDARY BURNER

GENERAL ATOMIC COMPANY
SAN DIEGO, CALIFORNIA

DRAWING NUMBER		ISSUE
852	5247095	1

SHEET 1 OF 2

*Nwj 7-18

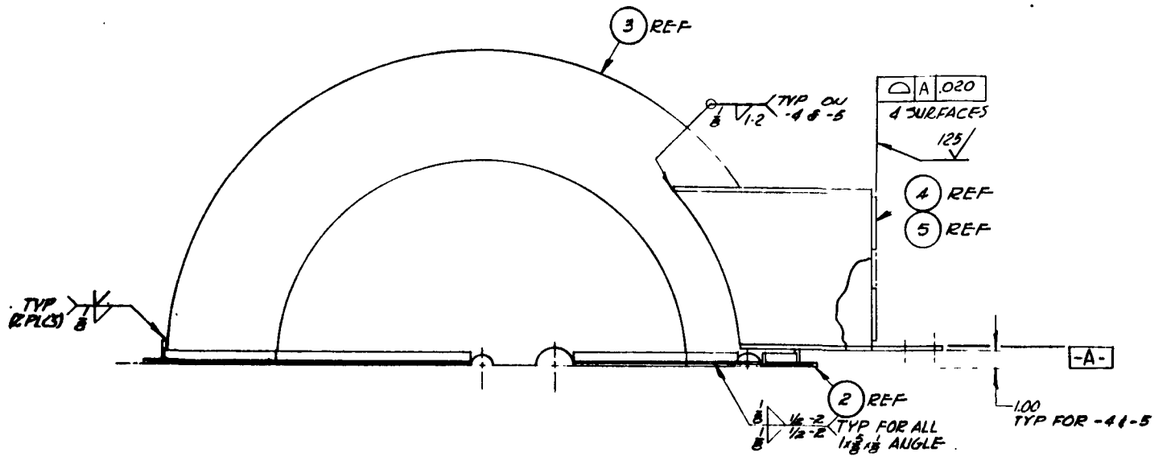

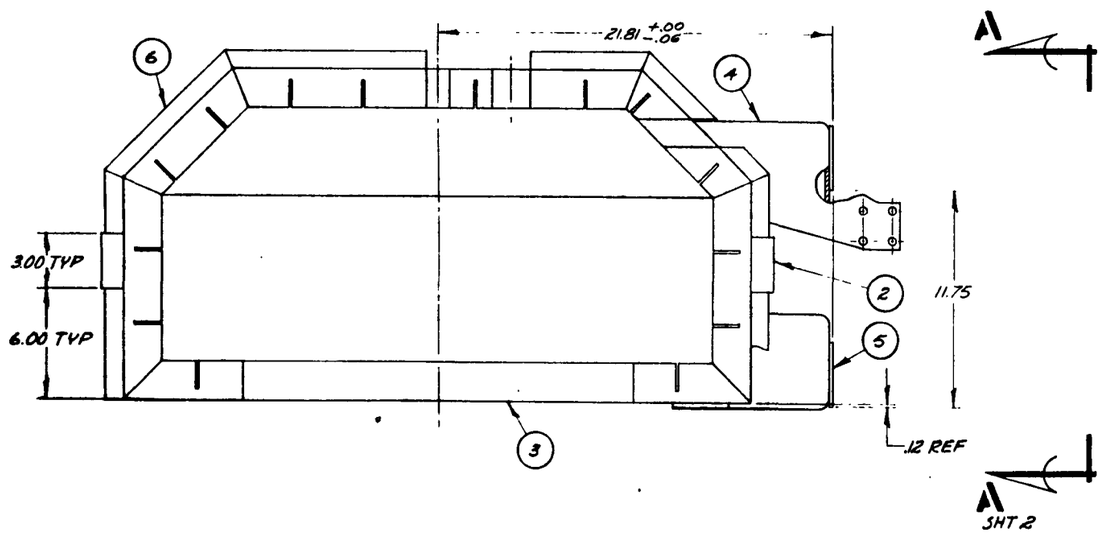

(-1) RIGHT HALF BONNET ASS'Y

NOTES

1. DIMENSIONS & TOLERANCES PER ANSI-Y14.5
2. REMOVE ALL BURRS & SHARP EDGES
3. WELD BY MANUAL ARC GMA OR GTA PROCESS
4. WELD FILLER METAL TO BE AWS-A5.9 TYPE ER308
5. SURFACE CONTOURS OF ALL WELDS TO BE SMOOTH & FREE FROM UNDERCUTS, OVERLAPS, ABRUPT RIDGES OR VALLEYS
6. LIQUID PENETRANT INSPECT WELDS PER ASTM-E-165 WITH ACCEPTANCE STDS PER APPENDIX VIII, SECTION VIII, DIV 1 OF THE ASME BOILER & PRESSURE VESSEL CODE.

REQD/ASSEMBLY	ITEM	PART NO.	DESCRIPTION	MATL	
AR	6	5247041 -6	STIFFENER 1x1x1/8 ANGLE	304 SS	ASTM-A-276
1	5	5247047 -1	RIGHT LOWER SUPPORT BRACKET		
1	4	5247046 -1	RIGHT UPPER SUPPORT BRACKET		
1	3	5247045 -1	INSULATION BONNET, RIGHT HALF		
2	2	5247041 -2	CLAMP PAD 1x1x1/8 ANGLE	304 SS	ASTM-A-276
1	1	5247041 -1	RIGHT HALF BONNET ASS'Y		

LIST OF MATERIAL

LTR	DATE	ISSUE DESCRIPTION	DR	CHK.	DES.	APPD.	APPD.
B	7-5-76	SEE ECO #00196					
A	7-2-76	APP'D FOR CONSTRUCTION					

UNLESS OTHERWISE SPECIFIED DIMENSIONS ARE IN INCHES. TOLERANCES DECIMALS .XXX±.015 .XX±.03 FRACTIONS ±1/32 ANGLES ±2° ALL MACHINED SURFACES 250

NEXT ASS'Y 5247095

SCALE 1/4 & NOTED

EST. WT. -

FIGURE 12

RIGHT HALF BONNET ASS'Y-8" SECONDARY BURNER

GENERAL ATOMIC COMPANY
SAN DIEGO, CALIFORNIA

DRAWING NUMBER		ISSUE
852	5247041	B

SHEET 1 OF 2

852 5247041 B

Figure 13

BEST VALUE INTEGRATED BURNER SYSTEM DESIGN CONCEPT

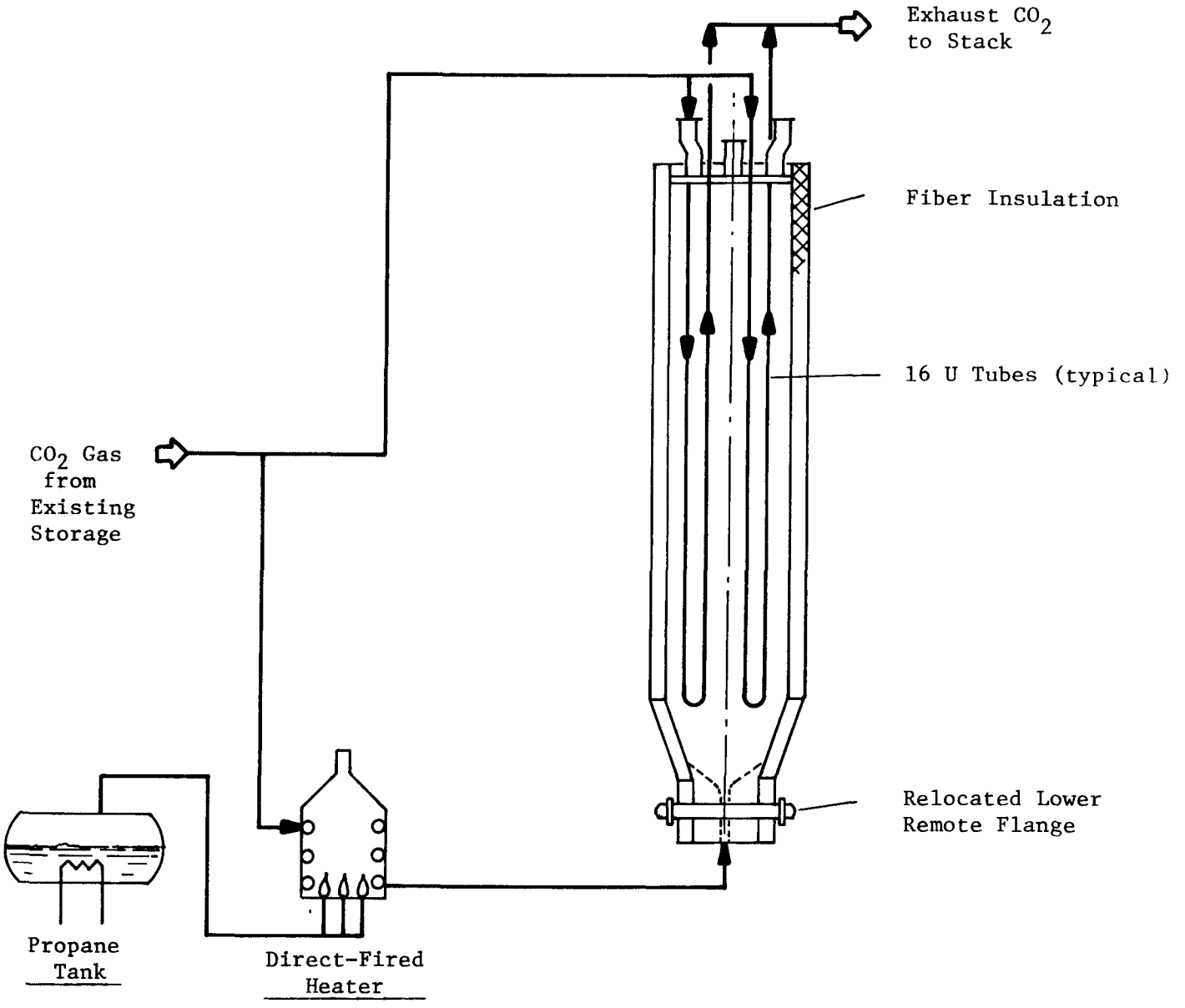

Figure 14

MINIMUM RISK INTEGRATED BURNER SYSTEM DESIGN CONCEPT

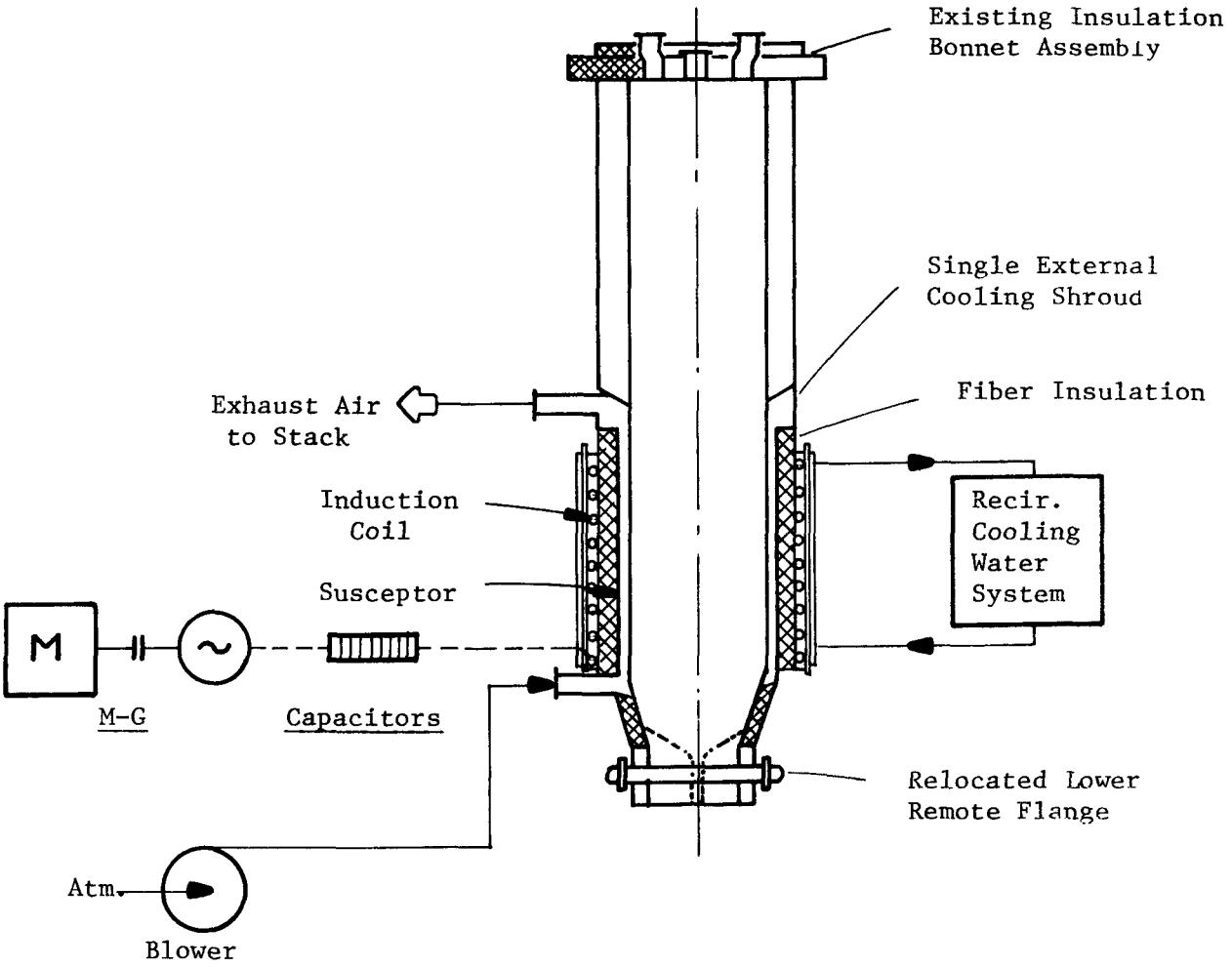

APPENDIX I

FAST DIAGRAMS

FAST DIAGRAM

PRIMARY BURNER SYSTEM

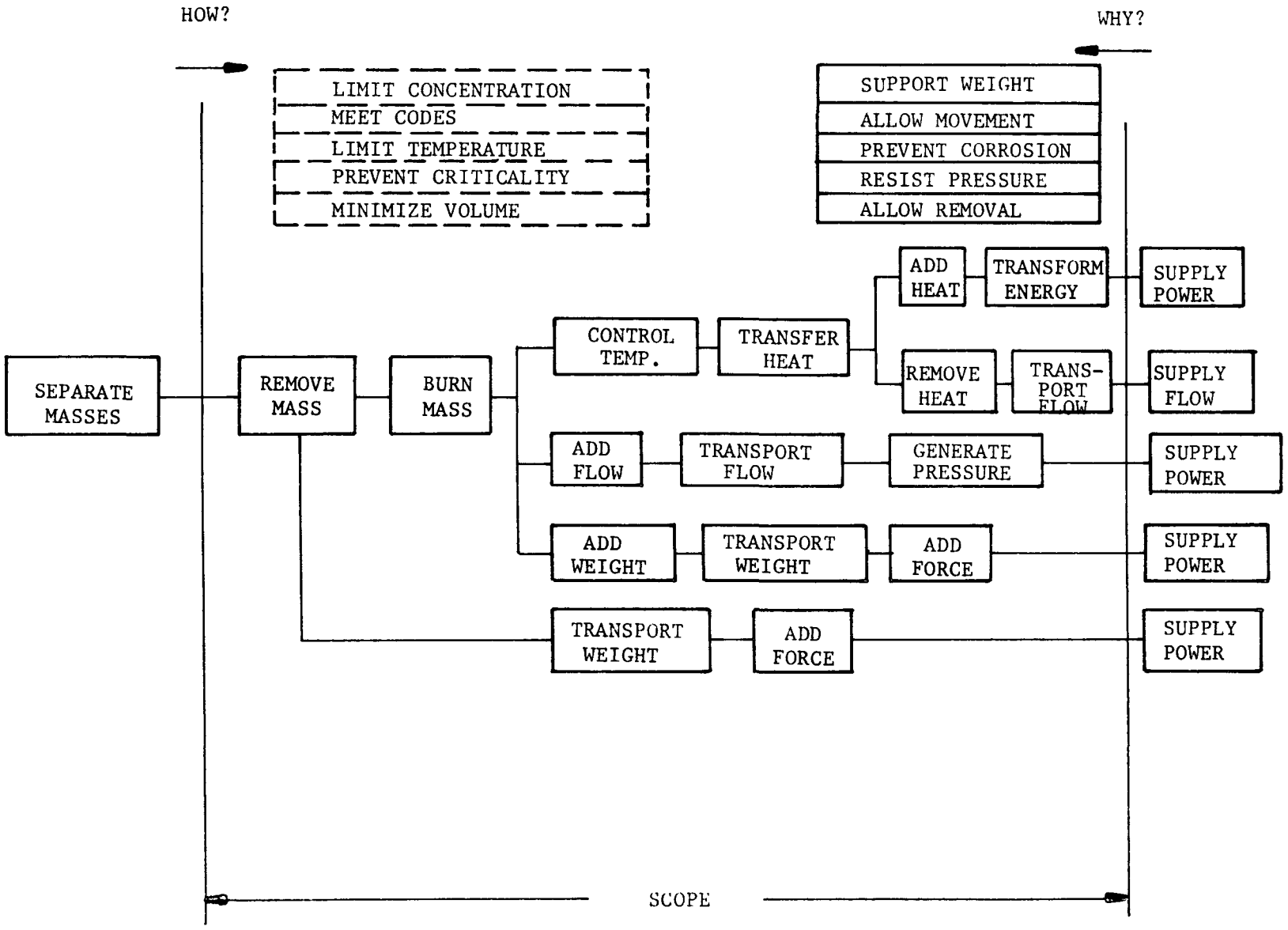

FAST DIAGRAM

BURNER TUBE ASSEMBLY (ON-LINE)

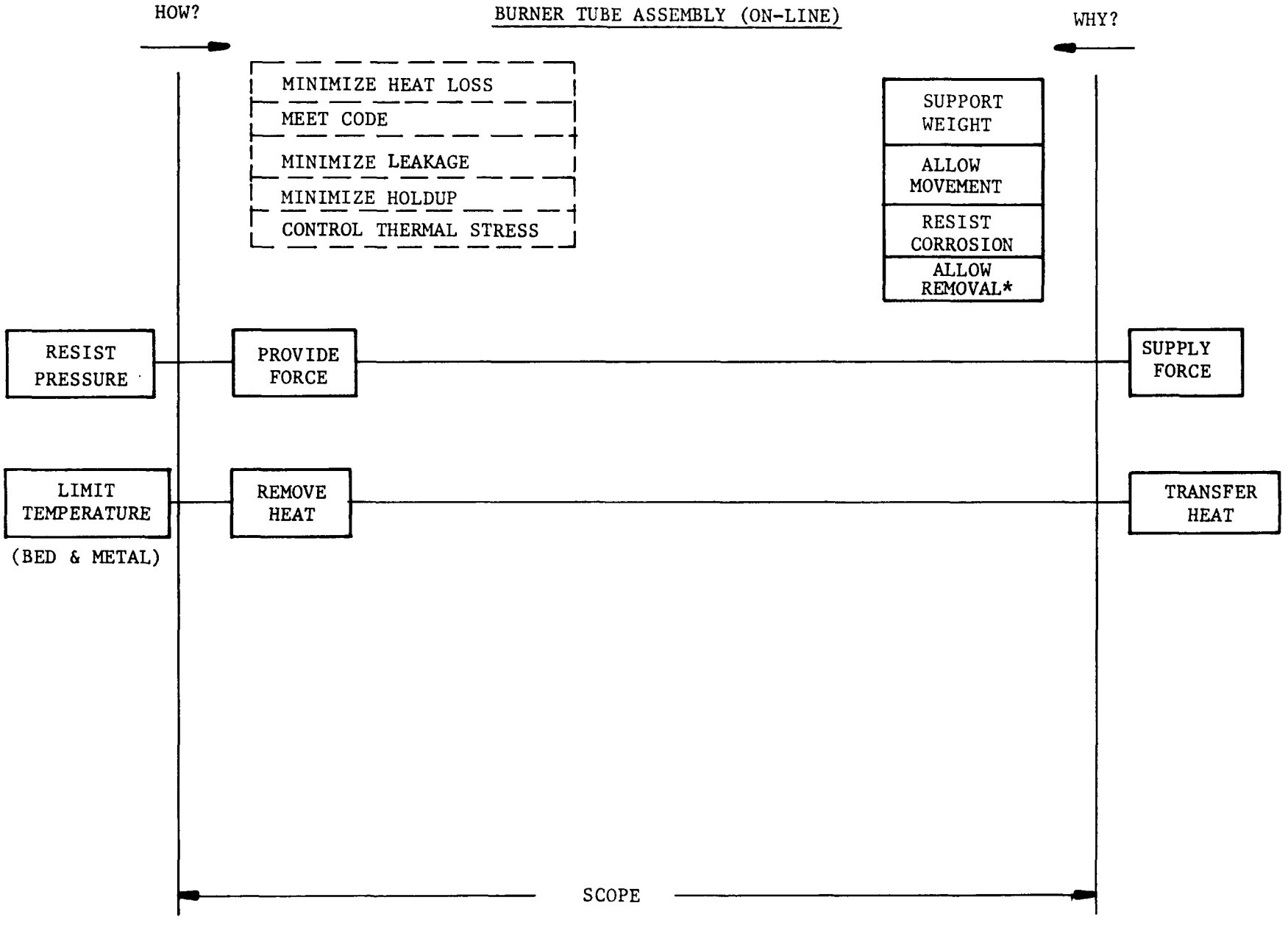

*NOTE: A SEPARATE DIAGRAM SHOULD BE CREATED FOR OFF-LINE SERVICE, INCLUDING SEMI-REMOTE MAINTENANCE.

FAST DIAGRAM

TOP CAP ASSEMBLY

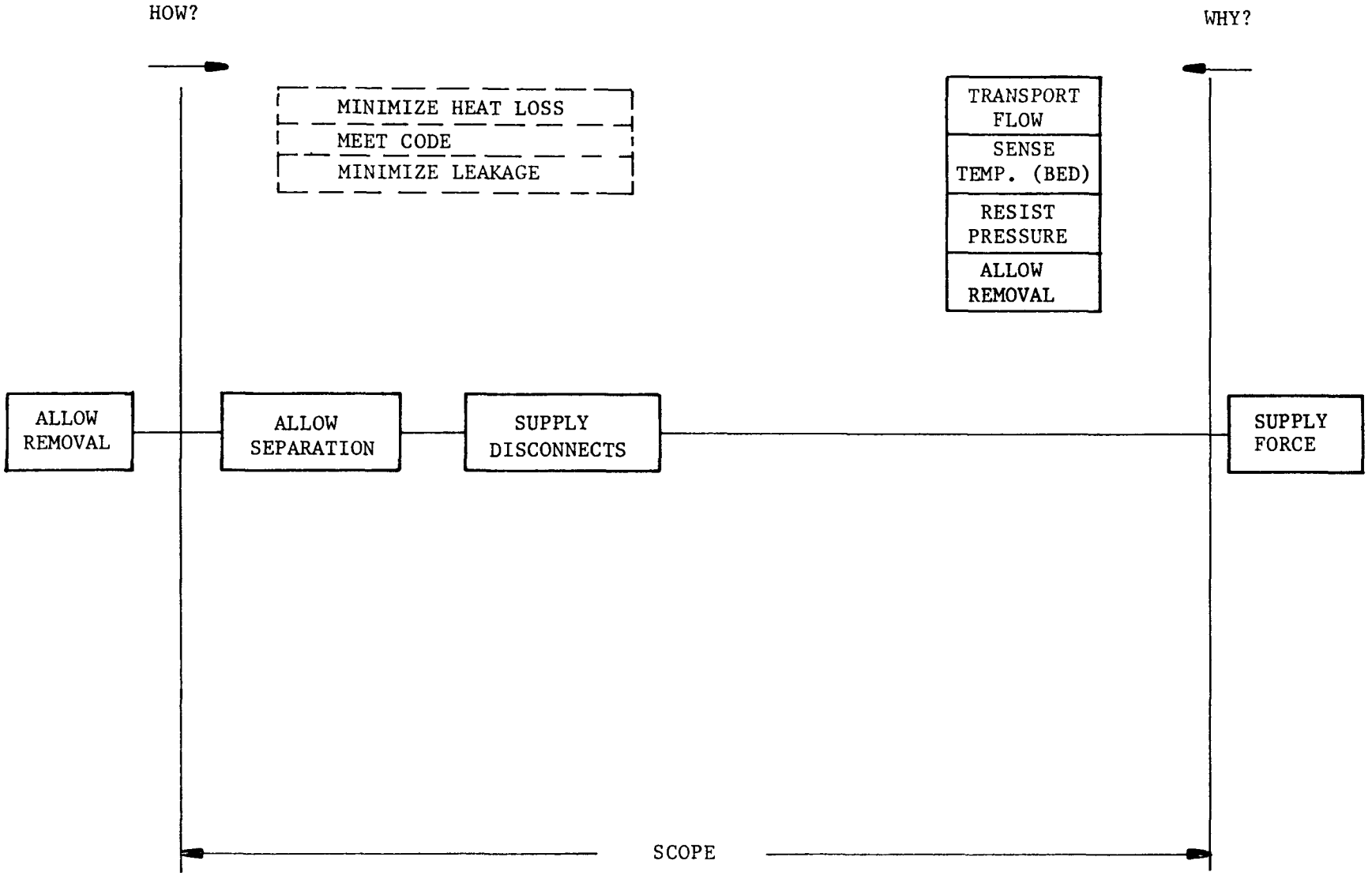

FAST DIAGRAM

DISTRIBUTOR SPOOL ASSEMBLY

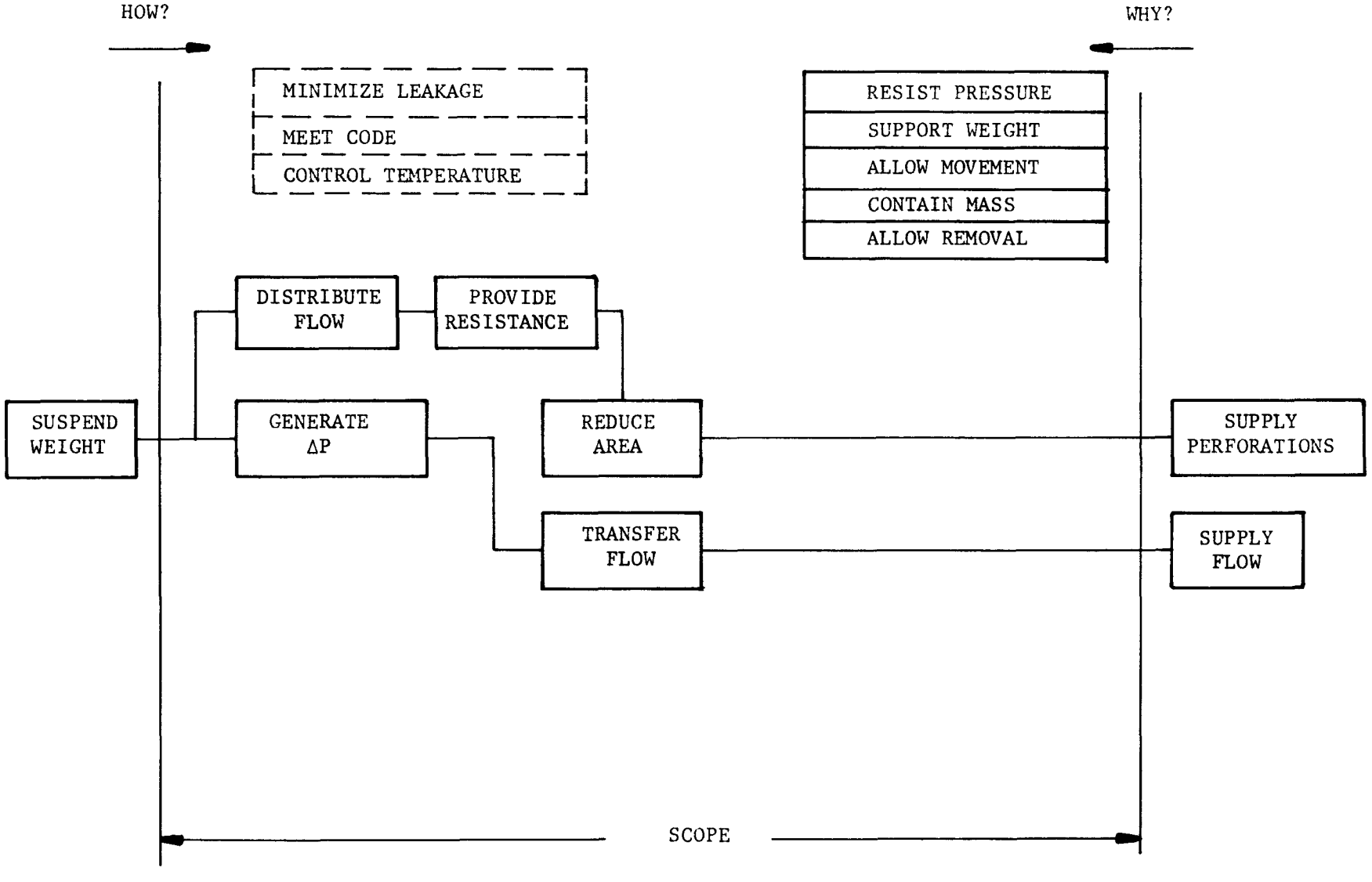

FAST DIAGRAM

INSULATION SUBSYSTEM

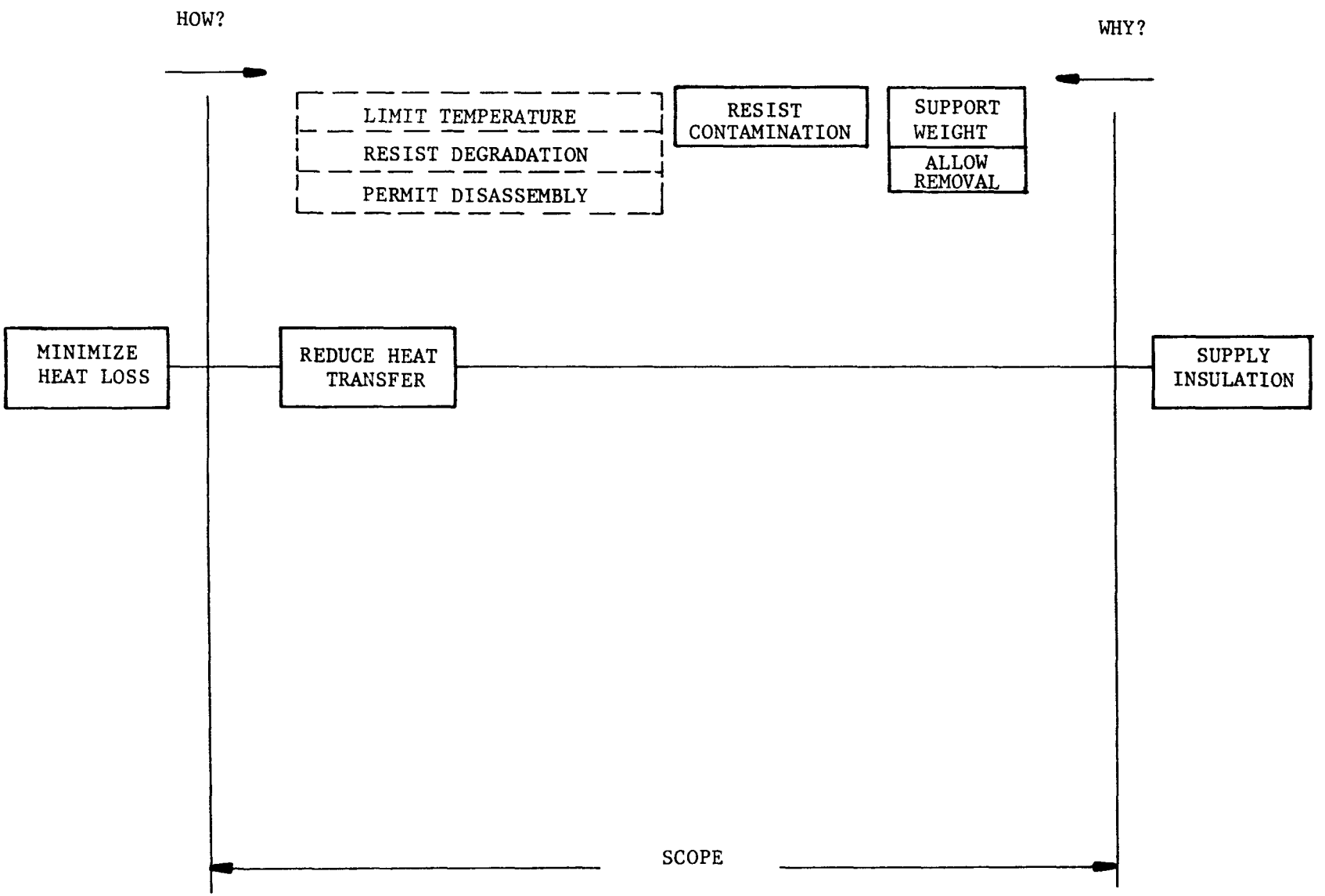

FAST DIAGRAM

HEATING SUBSYSTEM

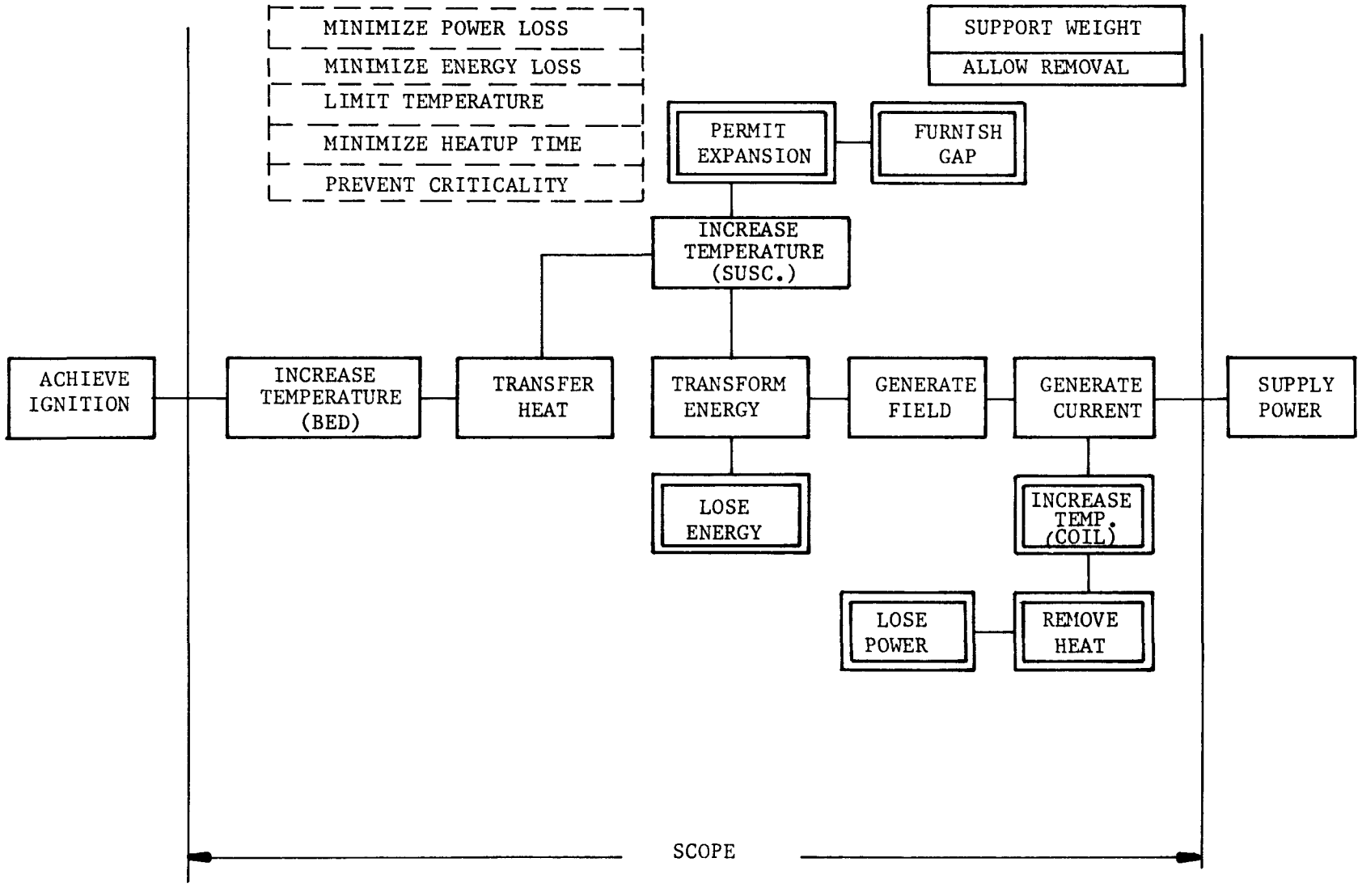

FAST DIAGRAM

COOLING SUBSYSTEM

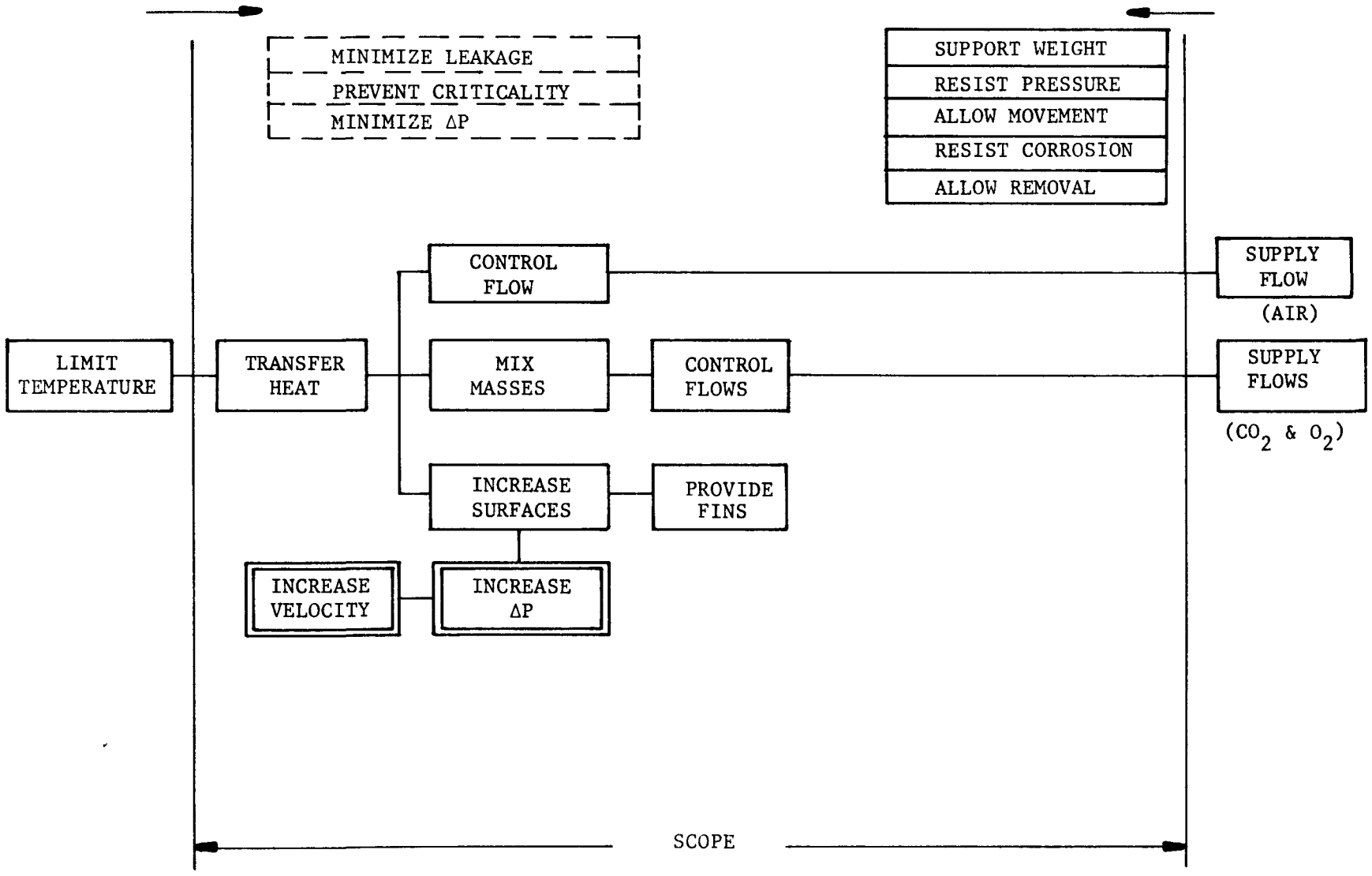

FAST DIAGRAM

FEED ADDITION EQUIPMENT

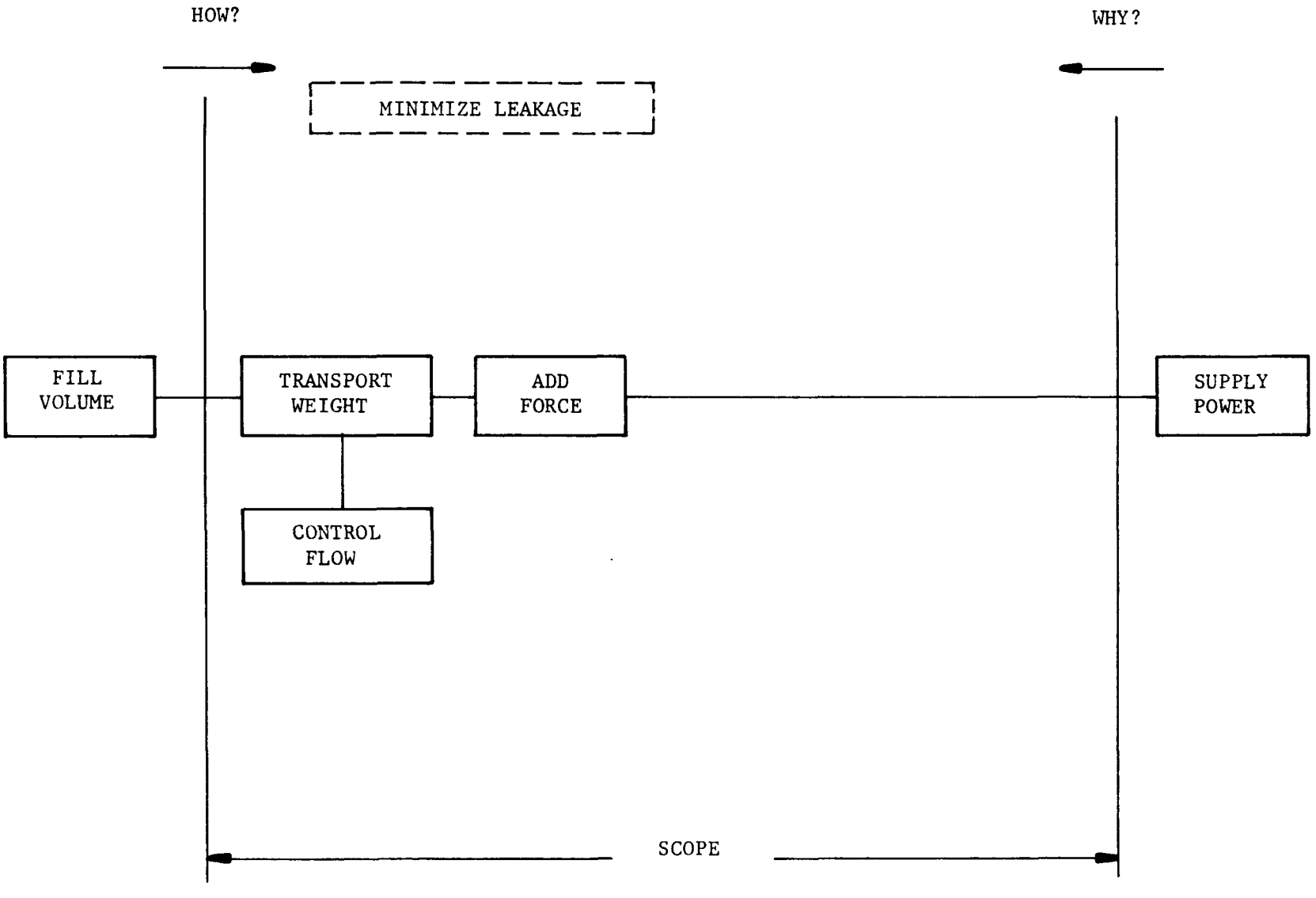

FAST DIAGRAM

PRODUCT REMOVAL EQUIPMENT

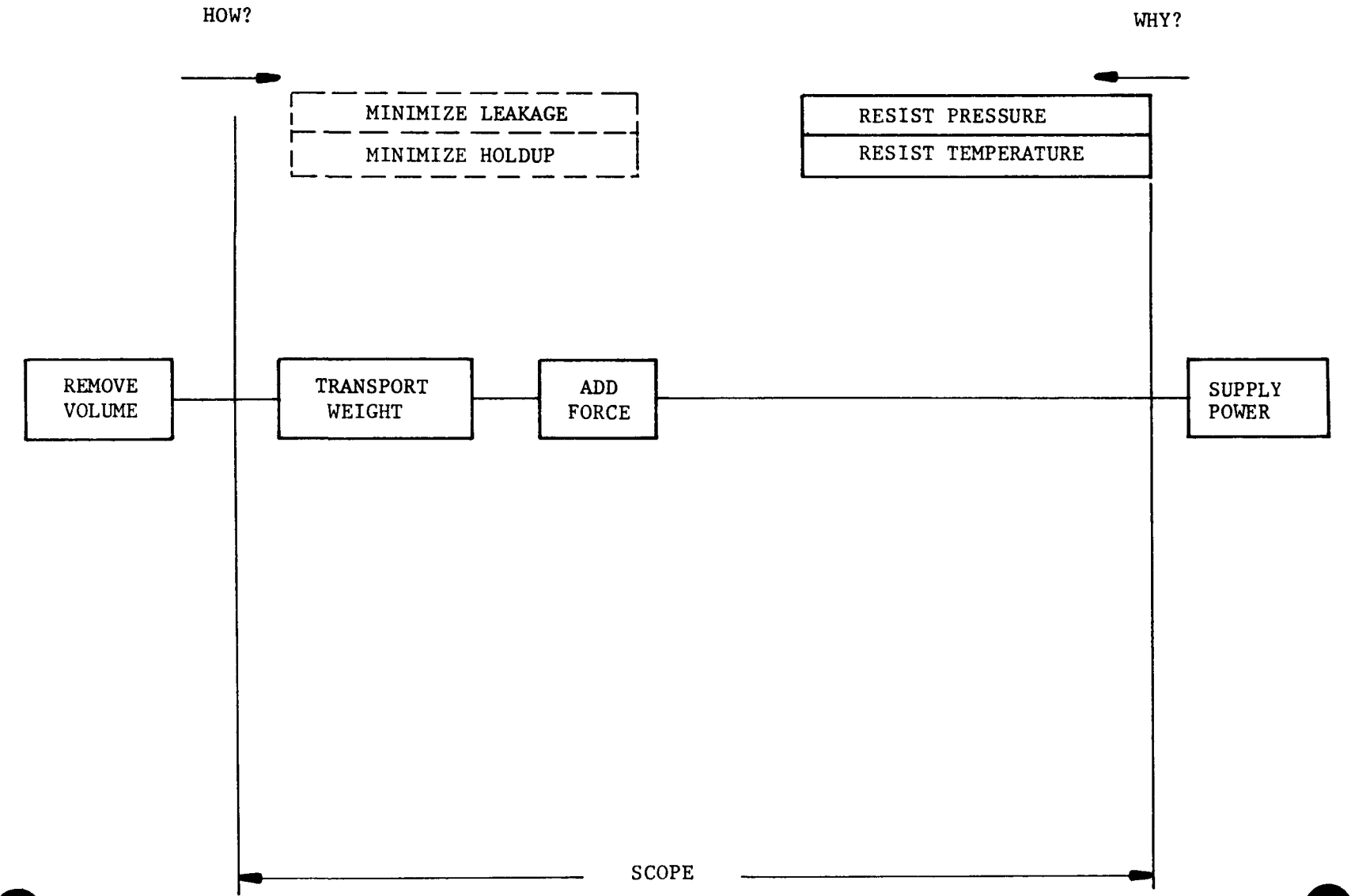

FAST DIAGRAM

FINES RECYCLE EQUIPMENT

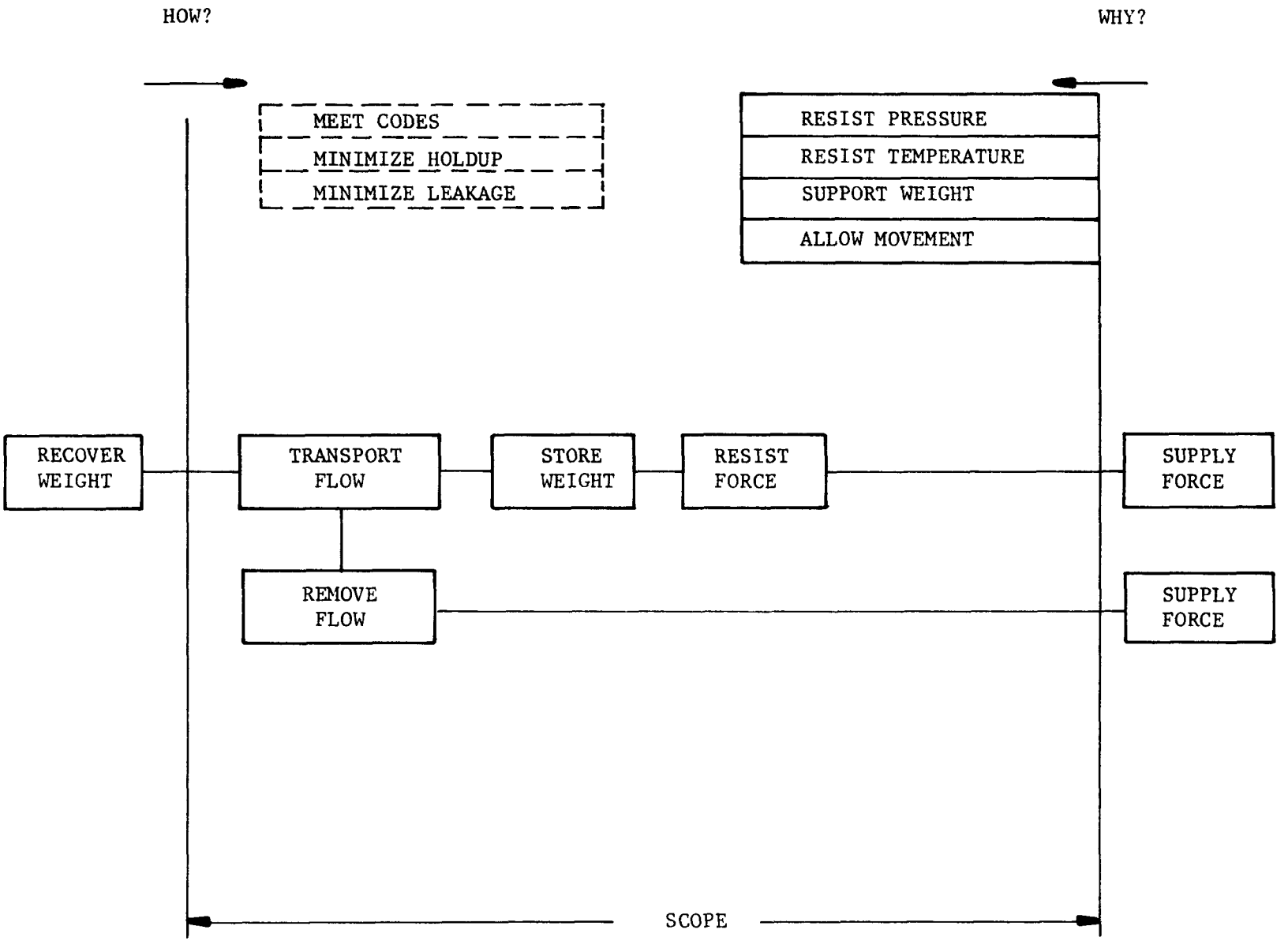

FAST DIAGRAM

REMOTE MAINTENANCE SUBSYSTEM (OFF-LINE)

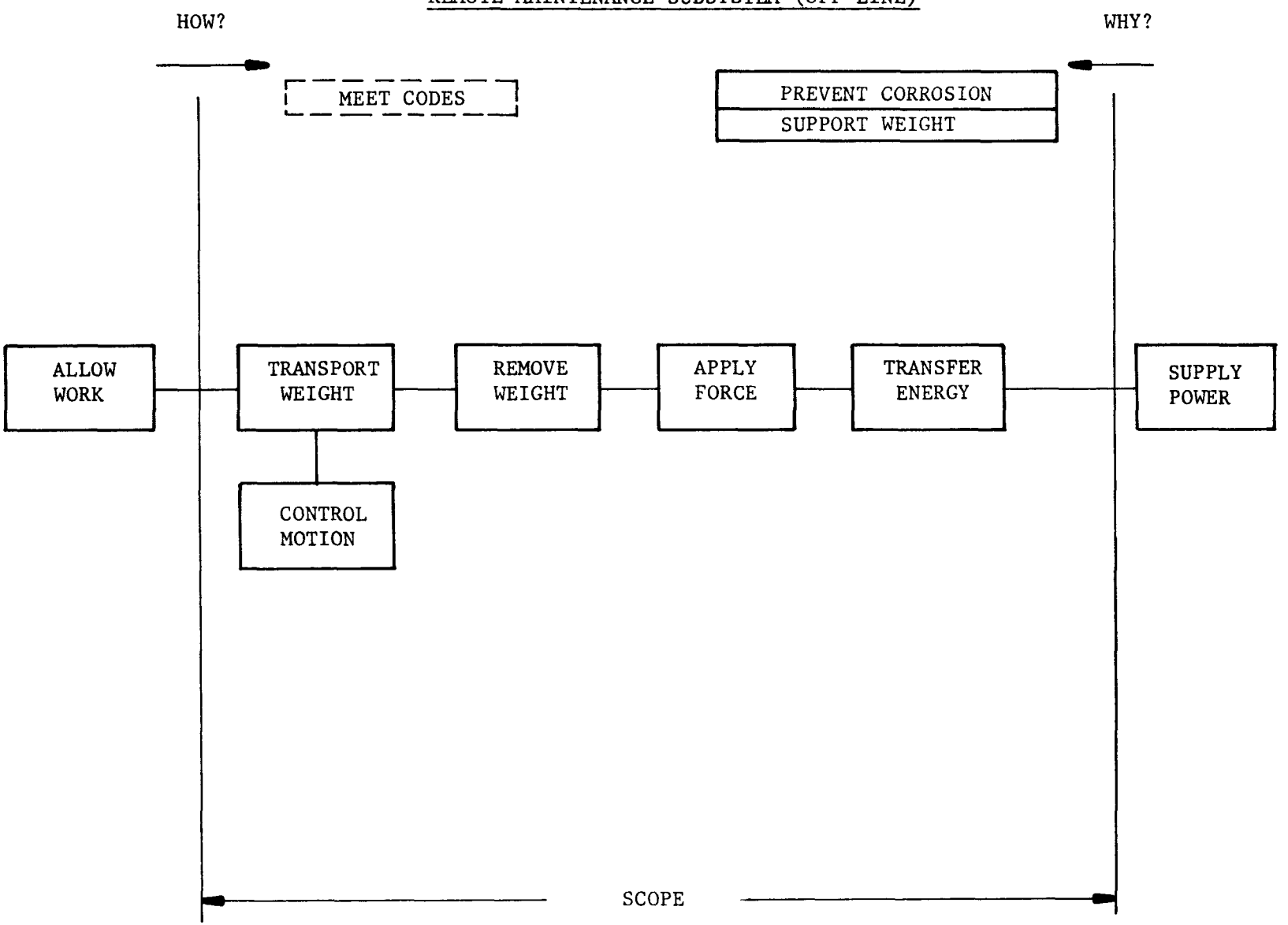

APPENDIX II

EVALUATION OF PRESENT SYSTEM

FORM A

EVALUATION OF PRESENT SYSTEM

FEATURE #1	ADVANTAGES	DISADVANTAGES	DESIGN SPECIFICATIONS/REMARKS
Separability of upper and lower cooling shrouds	1. Permits local inspection of vessel. 2. Facilitates removal of shroud with overhead crane w.r.t. overhead clearance required. 3. Permits maintenance access to burner vessel and induction heating system. 4. Facilitates removal of vessel, i.e., reduce overhead clearance required. 5. May increase heat transfer rate, e.g., higher LMTD due to lower average air temperature. 6. Warpage or vessel distortion less a problem than with single shroud.	1. Additional seals required to prevent leakage of cool. air. 2. Initial installation more difficult, i.e., requires more handling, time. 3. Expensive construction.	1. Minimize heat leak to surroundings. Cell temp. limit 120°F. Waste heat rejection rate limited also by the allowable heat load on cell ventilation system. 2. Reduce cooling air leakage (blower size).

FORM A

EVALUATION OF PRESENT SYSTEM

FEATURE #2	ADVANTAGES	DISADVANTAGES	DESIGN SPECIFICATIONS/REMARKS
Hinged doors on upper shroud and lower plenum	1. Permits removal of burner (through doors) and lowers overhead clearance required. 2. Permits access to lower clamp for maintenance. 3. Limits required travel of burner to remove (pin fins reduce radial gap, and reduced clearance would make complete removal of burner more difficult). 4. Permits local inspection of vessel, clamps.	1. Additional seals required to prevent leakage of cool. air. 2. Fabrication more difficult due to tolerances, warpage. 3. Additional remote mechanisms required. 4. May result in increased warpage due to separation between doors and shroud.	1. Reduce heat leak per page 44 ("REMARKS")

FORM A

EVALUATION OF PRESENT SYSTEM

FEATURE #3	ADVANTAGES	DISADVANTAGES	DESIGN SPECIFICATIONS/REMARKS
Grafoil sliding seal (between cooling shroud and vessel).	1. Reduces leakage of cool. air, contamination. 2. Permits separation of tube from shroud for maintenance, as opposed to a welded closure. 3. Permits thermal expansion.	1. Difficult to build an efficient high temperature reliable seal. Existing seal unproven.	1. Seal design temp. ∿1650°F. 2. Provide for ∿1-1/2" vertical travel, based on 40 cm primary burner height, material (Hastelloy X), and ΔT ($T_{burner} - T_{support}$).

FORM A

EVALUATION OF PRESENT SYSTEM

FEATURE #4	ADVANTAGES	DISADVANTAGES	DESIGN SPECIFICATIONS/REMARKS
Remote disconnect of burner assemblies.	1. Allows remote disassembly/assembly. 2. Lower remote flange allows in-place replacement of distributor plate, which is the most likely location for failure due to burn-through (by experience).	1. Difficult to operate. 2. Imposes operating limitations on burners, e.g., rate of heat input via clamp heater. 3. Expensive. 4. Unproven reliability.	1. No current requirement for top remote flange for maintenance or inspection. 2. Advantage #2 is important because burner disposal* is expensive (burner processes transuranic elements; decontamination is expensive). *"throw-away" burner concept. 3. Small (1-1/2" - 5") remote flanges have the same (but less significant) advantages and disadvantages as the larger vessel flanges. In any case, remote disconnect of the burner from overhead process lines is mandatory.

FORM A

EVALUATION OF PRESENT SYSTEM

FEATURE #5	ADVANTAGES	DISADVANTAGES	DESIGN SPECIFICATIONS/REMARKS
Coolant shroud (pressure boundary) external to vessel	1. No negative effect on bed fluidization characteristics. 2. Secondary containment (of sorts) of contamination. 3. Reduces burner size required at same capacity, as opposed to internal cooling tubes. 4. May allow higher bed temperatures before vessel temperature limit is reached. 5. Lower temperature materials are required as compared to internal coils.	1. Difficult to fabricate. 2. Imposes some upper limit on burner diameter increases (to increase capacity) due to heat transfer coefficients being relatively poor. 3. Introduces sealing/expansion design problems. 4. Process response slower than with internal cooling tubes.	1. Vertical tubes inside the burner may have a positive effect of dampening slugging. 2. Allowable axial temperature gradient: ±10% (maximum). 3. Minimize bed temperature response time.

FORM A

EVALUATION OF PRESENT SYSTEM

FEATURE #6	ADVANTAGES	DISADVANTAGES	DESIGN SPECIFICATIONS/REMARKS
(Absence of) recycle fines cooling capability	1. Cheaper to build and to operate (w/o temp. control capability).	1. Components operating temp. can get too high.	1. Hopper fines temp. <475°C (internal to vessel).

FORM A

EVALUATION OF PRESENT SYSTEM

FEATURE #7	ADVANTAGES	DISADVANTAGES	DESIGN SPECIFICATIONS/REMARKS
Waste heat rejection to environment, i.e., hot cell.	1. Possibly cheaper to build, i.e., no cooling shrouds (although heat savings may offset this).	1. Cyclone temp. high (requires greater than 650°C design temp.). 2. Hot cell temp. gets too high (HRDF limitation). 3. None of waste heat is recovered.	None.

FORM A

EVALUATION OF PRESENT SYSTEM

FEATURE #8	ADVANTAGES	DISADVANTAGES	DESIGN SPECIFICATIONS/REMARKS
Method and location of T/C attachment to vessel.	1. Simplicity of design. 2. Low first-time cost. 3. Minimum effect on vessel stresses (as opposed to imbedded T/C's).	1. Mechanically weak. 2. Reliability is a function of the installation. 3. Cannot replace T/C's.	None.

FORM A

EVALUATION OF PRESENT SYSTEM

FEATURE #9	ADVANTAGES	DISADVANTAGES	DESIGN SPECIFICATIONS/REMARKS
Method of fabrication of susceptor Basis: Rolled and welded plate or sheet.	1. Ease of fabrication (depends on fabricator). 2. Low waste of susceptor metal during fabrication.	1. Dimensional tolerances more critical. 2. Longitudinal weld may be difficult (depends on fabricator).	None.

FORM A

EVALUATION OF PRESENT SYSTEM

FEATURE #10	ADVANTAGES	DISADVANTAGES	DESIGN SPECIFICATIONS/REMARKS
Vessel tube length, L/D (now) = 10 → L/D = 15	1. Shorter length cheaper to build. 2. Smaller hot cell height. 3. Maintenance inc. assembly, alignment of tube, and dis-assembly easier. 4. Less waste (disposal of burner itself at end-of-life).	1. Shorter length increases bed particle elutriation due to slugging. 2. Shorter length decreases fines burning efficiency.	None.

FORM A

EVALUATION OF PRESENT SYSTEM

FEATURE #11	ADVANTAGES	DISADVANTAGES	DESIGN SPECIFICATIONS/REMARKS
Type of burner insulation (ceramic vs. fiber). Basis: Ceramic.	1. Separateness of ceramic insulator and susceptor. Thus it is possible to lift out ceramic separately and replace. 2. Ceramic can withstand erosive gas velocities, i.e., cooling, air. 3. Lower water absorption than fiber due to lower porosity. (Water can cause a criticality if the right amount is present.)	1. Ceramic brittle. 2. Ceramic cannot be lifted from the top, i.e., it can't support its own weight. 3. Higher thermal conductivity than fiber, i.e., poorer insulating properties. 4. Higher material cost.	None.

FORM A

EVALUATION OF PRESENT SYSTEM

FEATURE #12	ADVANTAGES	DISADVANTAGES	DESIGN SPECIFICATIONS/REMARKS
Method of heating burner (induction vs. CO_2 preheat). Basis: Induction heating.	1. Probably smaller burner diameter or lower burner pressure for the same capacity. 2. Faster startup time with less gas circulation at the same burner L/D due to low heat capacity of gas. 3. Off-gas O_2 control and monitoring during tail-burning are easier without large additional amount of CO_2.	1. High cost of heating system, including coil, capacitors, M-G set, recirc. C. W. equipment. [NOTE: This may not be significant depending on the design and cost of CO_2 preheat system equipment, e.g., furnace, heat exchanger, etc.] 2. Waste heat recovery (exchange with burner off-gas) is not possible. 3. Remote maintenance is more complicated because much of heating system must be close to burner (inside hot cell). 4. Increases complexity of burner shrouding.	

FORM A

EVALUATION OF PRESENT SYSTEM

FEATURE #13	ADVANTAGES	DISADVANTAGES	DESIGN SPECIFICATIONS/REMARKS
Unitized vs. "split dome" design of insulation bonnet assembly. Basis: Unitized design (primary burner). "Split-dome": Present 20-cm secondary burner design.	1. Cheaper to fabricate. 2. Cheaper fixtures required to effect removal.	1. Unitized design requires more time to remove for maintenance.	None.

APPENDIX III

COST ANALYSIS OF PRESENT SYSTEM

Design Evaluation FORM B – MANUFACTURING PROCESS/TIME/COST ANALYSIS

EXISTING 40-cm PRIMARY BURNER | Date: 1-14-77 | By: J. Rode

MAJOR EQUIP/SYSTEM: REF:
SUBSYSTEM:
COMPONENT: Upper and Lower Cooling Shroud REF: GA Dwg. 524401-025-045

Item	Man Hours	Rate $/hr	Labor $	Mat'l $	Total $
I. Engineering					
A. Design					
B. Computer					
II. Purchased Material					
III. Manufacturing					
A. Planning					
B. Fabrication	71	38.70	2,748	600	3,348
1. Machining					
2. Welding					
3. Sheet Metal					
4. Tool Design					
5. Heat Treat					
6. Inspection & Test					
7. Surface Finish					
8. Material Handling					
9. Assembly & Checkout					
10. _____					
11. _____					
IV. Installation					
A. Mech./Struct'l	Δ = 200 (1)	30	6,000		6,000
B. Electrical					
C. Instrumentation					
D. Plg/HVAC					
E. Inspection/Test					
F.					
V. Totals	271		8,748	600	9,348

(1) The estimated differential between existing split shroud design and a "unitized" shroud.

Design Evaluation FORM B - MANUFACTURING PROCESS/TIME/COST ANALYSIS

EXISTING 40-cm PRIMARY BURNER | Date: 1-14-77 | By: JRode

MAJOR EQUIP/SYSTEM:
SUBSYSTEM:
COMPONENT: Hinged Doors on Upper/ Lower Cooling Shrouds

REF:

REF: GA Dwgs. 524401-045-025

Item	Man Hours	Rate $/hr	Labor $	Mat'l $	Total $
I. Engineering					
A. Design					
B. Computer					
II. Purchased Material					
III. Manufacturing					
A. Planning					
B. Fabrication	110	38.70	4,250	750	5,000
1. Machining					
2. Welding					
3. Sheet Metal					
4. Tool Design					
5. Heat Treat					
6. Inspection & Test					
7. Surface Finish					
8. Material Handling					
9. Assembly & Checkout					
10. _____					
11. _____					
IV. Installation					
A. Mech./Struct'l	23	30	700		700
B. Electrical					
C. Instrumentation					
D. Plg/HVAC					
E. Inspection/Test					
F.					
V. Totals	133		4,950	750	5,700

Design Evaluation FORM B - MANUFACTURING PROCESS/TIME/COST ANALYSIS

EXISTING 40-cm PRIMARY BURNER | Date: 1-14-77 | By: J. Rode

MAJOR EQUIP/SYSTEM: REF:
SUBSYSTEM:
COMPONENT: Grafoil Sliding Seal REF: P.O. 583147

Item	Man Hours	Rate $/hr	Labor $	Mat'l $	Total $
I. Engineering					
A. Design					
B. Computer					
II. Purchased Material					3,059
III. Manufacturing					
A. Planning					
B. Fabrication					
1. Machining					
2. Welding					
3. Sheet Metal					
4. Tool Design					
5. Heat Treat					
6. Inspection & Test					
7. Surface Finish					
8. Material Handling					
9. Assembly & Checkout					
10. _____					
11. _____					
IV. Installation					
A. Mech./Struct'l	40	30	1,200		1,200
B. Electrical					
C. Instrumentation					
D. Plg/HVAC					
E. Inspection/Test					
F.					
V. Totals	40	30	1,200		4,300

Design Evaluation FORM B - MANUFACTURING PROCESS/TIME/COST ANALYSIS

EXISTING 40-cm PRIMARY BURNER | Date: 1-12-77 | By: JRode

MAJOR EQUIP/SYSTEM:
SUBSYSTEM: Main Vessel Flanges -
COMPONENT: Grayloc Remote Connectors

REF: P.O. 537296, items 19,20,21,
REF: 22,23,24,25,26,27,28

Item	Man Hours	Rate $/hr	Labor $	Mat'l $	Total $
I. Engineering					
A. Design					
B. Computer					
II. Purchased Material					79,207
III. Manufacturing					
A. Planning					
B. Fabrication					
1. Machining					
2. Welding					
3. Sheet Metal					
4. Tool Design					
5. Heat Treat					
6. Inspection & Test					
7. Surface Finish					
8. Material Handling					
9. Assembly & Checkout					
10. _____					
11. _____					
IV. Installation					
A. Mech./Struct'l	56	30	1,680		1,680
B. Electrical					
C. Instrumentation					
D. Plg/HVAC					
E. Inspection/Test					
F.					
V. Totals	56		1,680		80,900

Design Evaluation FORM B - MANUFACTURING PROCESS/TIME/COST ANALYSIS

EXISTING 40-cm PRIMARY BURNER | Date: 1-12-77 | By: JRode

MAJOR EQUIP/SYSTEM:
SUBSYSTEM: Small (Ancillary) Remote
COMPONENT: Grayloc Connectors

REF:
REF: P.O. #537296, items 1 through 18, 29.

Item	Man Hours	Rate $/hr	Labor $	Mat'l $	Total $
I. Engineering					
A. Design					
B. Computer					
II. Purchased Material			2,686	5,393	8,079
III. Manufacturing					
A. Planning					
B. Fabrication					
1. Machining					
2. Welding					
3. Sheet Metal					
4. Tool Design					
5. Heat Treat					
6. Inspection & Test					
7. Surface Finish					
8. Material Handling					
9. Assembly & Checkout					
10. _____					
11. _____					
IV. Installation					
A. Mech./Struct'l	24	30	720		720
B. Electrical					
C. Instrumentation					
D. Plg/HVAC					
E. Inspection/Test					
F.					
V. Totals	24		3,406	5,393	8,800

Design Evaluation FORM B - MANUFACTURING PROCESS/TIME/COST ANALYSIS

EXISTING 40-cm PRIMARY BURNER	Date: 1-14-77	By: JRode

MAJOR EQUIP/SYSTEM: REF:
SUBSYSTEM:
COMPONENT: Upper and Lower Cooling Shrouds REF: GA Dwg. 524401-025, -045

Item	Man Hours	Rate $/hr	Labor $	Mat'l $	Total $
I. Engineering					
A. Design					
B. Computer					
II. Purchased Material					
III. Manufacturing					
A. Planning					
B. Fabrication	1,058	38.70	40,945	8,948	49,893
1. Machining					
2. Welding					
3. Sheet Metal					
4. Tool Design					
5. Heat Treat					
6. Inspection & Test					
7. Surface Finish					
8. Material Handling					
9. Assembly & Checkout					
10. _____					
11. _____					
IV. Installation					
A. Mech./Struct'l	440	30	13,200		13,200
B. Electrical					
C. Instrumentation					
D. Plg/HVAC					
E. Inspection/Test					
F.					
V. Totals	1,498		54,145	8,948	63,093

Design Evaluation FORM B - MANUFACTURING PROCESS/TIME/COST ANALYSIS

EXISTING 40-cm PRIMARY BURNER | Date: 1-12-77 | By: [illegible]

MAJOR EQUIP/SYSTEM:
SUBSYSTEM: Heating, Inc. M-G Set, Capacitors,
COMPONENT: Dual Coil, Recirc. C.W. Equip., Ceramic and Susceptor.

REF: W.R. #1-2, 1-4, 1-5, 1-7, [illegible]
REF: P.O. 528471, C.O. #3, P.O. 564897, S.R. 466051, P.O. 572897, P.O. 570105

Item	Man Hours	Rate $/hr	Labor $	Mat'l $	Total $
I. Engineering					
A. Design					
B. Computer					
II. Purchased Material					56,486
III. Manufacturing					
A. Planning					
B. Fabrication					
1. Machining					
2. Welding			1,000		1,000
3. Sheet Metal					
4. Tool Design					
5. Heat Treat					
6. Inspection & Test					
7. Surface Finish					
8. Material Handling					
9. Assembly & Checkout (non-exempt)	173	30	5,190		5,190
10. " " (exempt)	250	40	10,000		10,000
11.					
IV. Installation (1) (85% N.E.; 15% Exempt)					
A. Mech./Struct'l	120	30	3,600		3,600
B. Electrical	150	30	4,500		4,500
C. Instrumentation					
D. Plg/HVAC	200	30	6,000		6,000
E. Inspection/Test					
F.					
V. Totals	893		30,290		86,80[illegible]

(1) Per W. S. Rickman

Design Evaluation FORM B - MANUFACTURING PROCESS/TIME/COST ANALYSIS

EXISTING 40-cm PRIMARY BURNER | Date: 1-12-77 | By: JRode

MAJOR EQUIP/SYSTEM:
SUBSYSTEM:
COMPONENT: Vessel T/C Attachment

REF: S.R. 449281, S.R.
REF: 475201, W.R. 1-15

Item	Man Hours	Rate $/hr	Labor $	Mat'l $	Total $
I. Engineering					
A. Design					
B. Computer					
II. Purchased Material					
III. Manufacturing					
A. Planning					
B. Fabrication					
1. Machining					
2. Welding			100		100
3. Sheet Metal					
4. Tool Design					
5. Heat Treat					
6. Inspection & Test					
7. Surface Finish					
8. Material Handling					
9. Assembly & Checkout					
10. _____					
11. _____					
IV. Installation					
A. Mech./Struct'l					
B. Electrical (N.E.-T/C Wires)	48	30	1,440		1,440
C. Instrumentation					
D. Plg/HVAC					
E. Inspection/Test					
F.					
V. Totals	48		1,540		1,540 (1)

(1) Based on 25 T/C's on vessel tube only.

Design Evaluation FORM B - MANUFACTURING PROCESS/TIME/COST ANALYSIS

EXISTING 40-cm PRIMARY BURNER | Date: 1-12-77 | By: JRode

MAJOR EQUIP/SYSTEM: REF:
SUBSYSTEM:
COMPONENT: Cyclone Flanges REF: P.O. 547761

Item	Man Hours	Rate $/hr	Labor $	Mat'l $	Total $
I. Engineering					
A. Design					
B. Computer					
II. Purchased Material					∿100 (est.)
III. Manufacturing					
A. Planning					
B. Fabrication					
1. Machining					
2. Welding					
3. Sheet Metal					
4. Tool Design					
5. Heat Treat					
6. Inspection & Test					
7. Surface Finish					
8. Material Handling					
9. Assembly & Checkout					
10. _____					
11. _____					
IV. Installation	(1)				
A. Mech./Struct'l	--				
B. Electrical					
C. Instrumentation					
D. Plg/HVAC					
E. Inspection/Test					
F.					
V. Totals					∿100

(1) Installation somewhat easier with thicker flanges, but no credit taken.

Design Evaluation FORM B - MANUFACTURING PROCESS/TIME/COST ANALYSIS

EXISTING 40-cm PRIMARY BURNER | Date: 1-14-77 | By: JRode

MAJOR EQUIP/SYSTEM: REF:
SUBSYSTEM:
COMPONENT: Susceptor REF: P.O. 564897, S.R. 466051

Item	Man Hours	Rate $/hr	Labor $	Mat'l $	Total $
I. Engineering					
A. Design					
B. Computer					
II. Purchased Material					2,100
III. Manufacturing					
A. Planning					
B. Fabrication					
1. Machining					
2. Welding			1,000		1,000
3. Sheet Metal					
4. Tool Design					
5. Heat Treat					
6. Inspection & Test					
7. Surface Finish					
8. Material Handling					
9. Assembly & Checkout					
10. _____					
11. _____					
IV. Installation					
A. Mech./Struct'l	--				
B. Electrical					
C. Instrumentation					
D. Plg/HVAC					
E. Inspection/Test					
F.					
V. Totals					3,100

Design Evaluation FORM B - MANUFACTURING PROCESS/TIME/COST ANALYSIS

EXISTING 40-cm PRIMARY BURNER | Date: 1-14-77 | By: J. Rode

MAJOR EQUIP/SYSTEM: REF:
SUBSYSTEM:
COMPONENT: Ceramic Insulation Assembly REF: P.O. 572897, W.R. 1-4

Item	Man Hours	Rate $/hr	Labor $	Mat'l $	Total $
I. Engineering					
A. Design					
B. Computer					
II. Purchased Material					2,986
III. Manufacturing					
A. Planning					
B. Fabrication					
1. Machining					
2. Welding					
3. Sheet Metal					
4. Tool Design					
5. Heat Treat					
6. Inspection & Test					
7. Surface Finish					
8. Material Handling					
9. Assembly & Checkout					
10. _____					
11. _____					
IV. Installation					
A. Mech./Struct'l	60	30	1,800		1,800
B. Electrical					
C. Instrumentation					
D. Plg/HVAC					
E. Inspection/Test					
F.					
V. Totals	60		1,800		4,800

Design Evaluation FORM B - MANUFACTURING PROCESS/TIME/COST ANALYSIS

EXISTING 40-cm PRIMARY BURNER | Date: 1-14-77 | By: JRode

MAJOR EQUIP/SYSTEM: REF:
SUBSYSTEM:
COMPONENT: INSULATION-Bonnet Assembly REF: GA Dwg. 524401-063-1

Item	Man Hours	Rate $/hr	Labor $	Mat'l $	Total $
I. Engineering					
A. Design					
B. Computer					
II. Purchased Material					
III. Manufacturing					
A. Planning					
B. Fabrication	16	38.70	619	15	634
1. Machining					
2. Welding					
3. Sheet Metal					
4. Tool Design					
5. Heat Treat					
6. Inspection & Test					
7. Surface Finish					
8. Material Handling					
9. Assembly & Checkout					
10. _____					
11. _____					
IV. Installation					
A. Mech./Struct'l	16	30	480		480
B. Electrical					
C. Instrumentation					
D. Plg/HVAC					
E. Inspection/Test					
F.					
V. Totals	32		1,099		1,114

Design Evaluation FORM B - MANUFACTURING PROCESS/TIME/COST ANALYSIS

EXISTING 40-cm PRIMARY BURNER | Date: 1-14-77 | By: JRhode

MAJOR EQUIP/SYSTEM:
SUBSYSTEM:
COMPONENT: Vessel Tube Assembly

REF: P.O. 577417, C.O. #1,
REF: P.O. 564896; W.R. 1-12

Item	Man Hours	Rate $/hr	Labor $	Mat'l $	Total $
I. Engineering					
A. Design					
B. Computer					
II. Purchased Material					6,393
III. Manufacturing					
A. Planning					
B. Fabrication					60,830
1. Machining					
2. Welding					
3. Sheet Metal					
4. Tool Design					
5. Heat Treat					
6. Inspection & Test					
7. Surface Finish					
8. Material Handling					
9. Assembly & Checkout					
10. _____					
11. _____					
IV. Installation	(1)				
A. Mech./Struct'l	--				
B. Electrical					
C. Instrumentation					
D. Plg/HVAC					
E. Inspection/Test					
F.					
V. Totals					(2) 67,200

(1) No change in installation cost with moderate change in tube length.
(2) Based on total length of ∿13 feet (L/D = 10)

APPENDIX IV

NEW IDEAS FOR 10 DESIGN FEATURES

FORM B

CREATIVE PHASE

C R E A T I V E T H I N K I N G

FEATURE # 1

ASSEMBLY OR PART Upper & Lower Cooling Shrouds (Separability)
Name number

FUNCTION Allow Removal (of induction coil)
verb noun

QUANTITY IS WANTED

CRITICISM IS RULED OUT

THE WILDER THE BETTER

HITCH HIKE

1. Eliminate burner
2. Eliminate upper shroud
3. Use single cooling shroud
4. Support burner between shrouds
5. Provide shroud integral with burner; drop coil below
6. Eliminate induction coil
7. Use bolted-on shroud
8.
9.
10.
11.

Just getting started!

12.
13.
14.
15.
16.
17.
18.
19.
20.

21.
22.
23.
24.
25.
26.
27.
28.
29.
30.
31.

Keep going!

32.
33.
34.
35.
36.
37.
38.
39.
40.

FORM B

CREATIVE PHASE

C R E A T I V E T H I N K I N G

FEATURE # 2

ASSEMBLY OR PART Hinged Doors, Upper Shroud & Lower Plenum
Name number

FUNCTION Allow Removal/Inspection
verb noun

QUANTITY IS WANTED

CRITICISM IS RULED OUT HITCH HIKE

THE WILDER THE BETTER

Upper Shroud Doors	Lower Plenum Doors
1. Eliminate upper shroud	1. Eliminate plenum
2. Bolted-on upper shroud	2. Use other methods of inspection
3. Provide upper shroud as integrat part of vessel	3. Use bolted-on plenum
4. Use trunnion-mounted (tiltable) burner	4. Remove plenum bolts axially
5. Remove burner out bottom	5. Provide integral bolt on plenum; provide clamp bolt extension thru plenum
6. Use single shroud, removable from the top	6. Redesign plenum to eliminate clamp heater
7. Move burner support	7. Use plexiglass windows
8.	8. Build 'split' burner with remote flange at joint
9.	9. Provide insulation integral with clamp; extend bolt thru insulation
10.	
11.	
Just getting started!	Keep going!
12.	
13.	
14.	
15.	
16.	
17.	
18.	
19.	
20.	

FORM B

CREATIVE PHASE

C R E A T I V E T H I N K I N G

FEATURE # 3

ASSEMBLY OR PART Grafoil Sliding Seal
Name number

FUNCTION Permit Separation/Removal (tube from shroud)
verb noun

QUANTITY IS WANTED

CRITICISM IS RULED OUT

THE WILDER THE BETTER

HITCH HIKE

1. Use labyrinth seal
2. Use bellows-loaded face seal
3. Use integral welded shroud
4. Provide detachable bellows
5. Let the burner leak
6. Provide secondary containment and eliminate seal
7. Route and process leakage
8. Change location of seal to low pressure zone
9. Use remote 'gap stuffer'
10. Use different seal material
11. Use freeze plug to replace seal

Just getting started!

12. Use conventional flange and explosive bolts
13. Move burner support point (seal at bottom, allow upward growth)
14. Use 'expanding' shroud with slip-seal or bellows
15. Provide flexible seal
16.
17.
18.
19.
20.

21.
22.
23.
24.
25.
26.
27.
28.
29.
30.
31.

Keep going!

32.
33.
34.
35.
36.
37.
38.
39.
40.

FORM B

CREATIVE PHASE

C R E A T I V E T H I N K I N G

FEATURE # 4

ASSEMBLY OR PART Remote Disconnects
Name number

FUNCTION Allow Removal
verb noun

QUANTITY IS WANTED

CRITICISM IS RULED OUT

THE WILDER THE BETTER

HITCH HIKE

Main Vessel Flanges	Small Flanges (Top Cap Assembly)
1. Use expendable distributor	1. Use Tri-Clover clamp
2. Relocate disconnect to low temperature zone	2. Cut pipe and re-weld
3. Remove by torch-cutting, reinstall by welding	3.
4. Use 'throw-away' burner	4.
5. Use conventional flanges	5.
6. Use expandable distributor	6.
7. Eliminate distributor	7.
8. Provide multiple gas entries	8.
9.	9.
10.	
11.	
Just getting started!	Keep going!
12.	
13.	
14.	
15.	
16.	
17.	
18.	
19.	
20.	

FORM B

CREATIVE PHASE

C R E A T I V E T H I N K I N G

FEATURE # 5

ASSEMBLY OR PART Coolant Shroud
Name number

FUNCTION Remove/Resist Heat/Pressure (Sec.)
verb noun

QUANTITY IS WANTED

CRITICISM IS RULED OUT

THE WILDER THE BETTER

HITCH HIKE

1. Use internal cooling coil
2. Blow cold air across bare burner
3. Use liquid metal coolant with internal tubes
4. Inject liquid N_2 or CO_2
5. Use external cooling coil
6. Use trickle cooler
7. Imbed cooling tubes in vessel wall
8.
9.
10.
11.

Just getting started!

12.
13.
14.
15.
16.
17.
18.
19.
20.

21.
22.
23.
24.
25.
26.
27.
28.
29.
30.
31.

Keep going!

32.
33.
34.
35.
36.
37.
38.
39.
40.

FORM B

CREATIVE PHASE

C R E A T I V E T H I N K I N G

FEATURE # 6

ASSEMBLY OR PART Recycle Fines Subsystem
Name number

FUNCTION Remove Heat
verb noun

QUANTITY IS WANTED

CRITICISM IS RULED OUT

THE WILDER THE BETTER

HITCH HIKE

1. Cool rotary valve; design other components for high temperatures
2. Eliminate rotary valve; use pneumatic transport of fines
3. Eliminate fines recycle
4. Recycle fines internally
5.
6.
7.
8.
9.
10.
11.

Just getting started!

12.
13.
14.
15.
16.
17.
18.
19.
20.

21.
22.
23.
24.
25.
26.
27.
28.
29.
30.
31.

Keep going!

32.
33.
34.
35.
36.
37.
38.
39.
40.

FORM B

CREATIVE PHASE

C R E A T I V E T H I N K I N G

FEATURE # 7

ASSEMBLY OR PART Waste Heat Rejection (from burner auxiliaries)
Name number

FUNCTION Remove Heat
verb noun

QUANTITY IS WANTED

CRITICISM IS RULED OUT

HITCH HIKE

THE WILDER THE BETTER

1. Provide cooled hot cell liner
2. Provide high temperature liner
3. Provide cooling shrouds on hot equipment
4. Provide internal cooling coils on hot equipment
5. Provide external cooling coils on hot equipment.
6.
7.
8.
9.
10.
11.

Just getting started!

12.
13.
14.
15.
16.
17.
18.
19.
20.

21.
22.
23.
24.
25.
26.
27.
28.
29.
30.
31.

Keep going!

32.
33.
34.
35.
36.
37.
38.
39.
40.

FORM B

CREATIVE PHASE

C R E A T I V E T H I N K I N G

FEATURE # 8

ASSEMBLY OR PART Method of Thermocouple Attachment (to Vessel)
Name number

FUNCTION Sense Temperature
verb noun

QUANTITY IS WANTED

CRITICISM IS RULED OUT

THE WILDER THE BETTER

HITCH HIKE

1. Use optical pyrometer.
2. Use spring-loaded T/C.
3. Use Hanford cage-type T/C.
4. Drill holes, insert T/C.
5. Use internal wall T/Cs.
6. Use electrical properties of tube material.
7. Use quartz gauges.
8. Use thermistors.
9.
10.
11.

Just getting started!

12.
13.
14.
15.
16.
17.
18.
19.
20.

21.
22.
23.
24.
25.
26.
27.
28.
29.
30.
31.

Keep going!

32.
33.
34.
35.
36.
37.
38.
39.
40.

FORM B

CREATIVE PHASE

C R E A T I V E T H I N K I N G

FEATURE # 9

ASSEMBLY OR PART Susceptor (Method of Fabrication)
Name number

FUNCTION Transform/Transfer Energy/Heat
verb noun

QUANTITY IS WANTED

CRITICISM IS RULED OUT

THE WILDER THE BETTER

HITCH HIKE

1. Casting
2. Forging
3. Wire-wound and fused
4. Use seamless tube
5. Use non-magnetic 300 series stainless steel roll and weld.
6.
7.
8.
9.
10.
11.

Just getting started!

12.
13.
14.
15.
16.
17.
18.
19.
20.

21.
22.
23.
24.
25.
26.
27.
28.
29.
30.
31.

Keep going!

32.
33.
34.
35.
36.
37.
38.
39.
40.

FORM B

CREATIVE PHASE

C R E A T I V E T H I N K I N G

FEATURE # 10

ASSEMBLY OR PART Burner Tube (Length)
Name number

FUNCTION Reduce Particle Carryover
verb noun

QUANTITY IS WANTED

CRITICISM IS RULED OUT

THE WILDER THE BETTER

HITCH HIKE

1. Provide baffles.
2. Provide enlarged upper section.
3. Provide internal filter.
4. Lengthen burner.
5. Provide internal cyclones.
6. Use blinded tee at top to knock back particles.
7. Use zig-zag section at top
8.
9.
10.
11.

Just getting started!

12.
13.
14.
15.
16.
17.
18.
19.
20.

21.
22.
23.
24.
25.
26.
27.
28.
29.
30.
31.

Keep going!

32.
33.
34.
35.
36.
37.
38.
39.
40.

APPENDIX V

EVALUATION OF ALTERNATIVES

EVALUATION PHASE

IDEA EVALUATION

DESIGN FEATURE: SEPARABILITY OF UPPER AND LOWER COOLING SHROUDS (#1)

IDEAS - ARRANGE & COMBINE	MODIFY & ADD CONSTRAINTS	Δ COST, $ UNIT	Δ COST, $ IMPL.	ADVANTAGES	DISADVANTAGES	RATING
A) Eliminate upper shroud	Must insulate upper wall	(29,100)	3,000	Only one shroud left;	Insulated burner wall	2
				easier maintenance	may get too hot.	
B) Eliminate induction coil; use single	Alternate heating method	(71,100)	12,000	(1) Only one shroud left	(1) Other heating methods prob-	3
cooling shroud	must be designed and proven			(2) Easier maintenance	ably less efficient.	
				(3) Eliminate M-G set,	(2) More head room required.	
				capacitors, recirc. C.W.		
				& susceptor.		
C)						
Use single shroud. Remove coil out	At least 36" clearance re-	(9,350)	17,000	(1) Only one shroud left.	(1) Must design handling	1
bottom.	quired to remove coil.			(2) Easier maintenance.	mechanism for coil.	
				No need to remove	(2) Possible higher vertical	
				burner for coil main-	cell dimension?	
				tenance.		

EVALUATION PHASE

IDEA EVALUATION

DESIGN FEATURE: HINGED DOORS ON UPPER SHROUD AND LOWER PLENUM (#2)

IDEAS - ARRANGE & COMBINE	MODIFY & ADD CONSTRAINTS	Δ COST $ UNIT	Δ COST $ IMPL.	ADVANTAGES	DISADVANTAGES	RATING
UPPER SHROUD A) Provide integral upper shroud.	Should provide alternate method of inspection.	(3,100)	3,000	Hinged doors eliminated. Easier installation.	Cannot inspect upper zone visually.	1
B) Eliminate upper shroud	Must insulate upper wall.	(29,100)	3,000	Hinged doors eliminated. Easier installation.	Insulated burner wall may get too hot.	2
LOWER PLENUM C) Eliminate plenum. Provide integral insulated clamp with bolt extended through insulation.	Must provide for other method of inspection of clamp position.	(4,700)	6,000	Hinged doors eliminated.	Insulation design difficult. Lack of visibility of clamp position (open/closed).	1
D) Revise method of burner removal. a) Bottom support b) Middle support	Must provide for thermal expansion, also other methods of burner/clamp inspection.	6,500	21,600	Hinged doors eliminated. Single shroud possible. Burner alignment easier.	Remote handling equip. must be redesigned. Shroud must be removed at top due to bottom congestion. Alignment more difficult. Split shroud more likely with removal out top and bottom.	2

EVALUATION PHASE

IDEA EVALUATION

DESIGN FEATURE: GRAFOIL SLIDING SEAL

(#3)

IDEAS - ARRANGE & COMBINE	MODIFY & ADD CONSTRAINTS	Δ COST $ UNIT	Δ COST $ IMPL.	ADVANTAGES	DISADVANTAGES	RATING
A) Use bellows-loaded face seal.*	Must be designed for ∿1650°F and ∿1-1/2" vertical relative motion (burner to shroud)	4,700	3,000	Probable high reliability.** Good resistance to leakage and erosion.	Higher cost. Greater impact on schedule.**	2
B) Use different seal material (e.g. machined graphite).*	Ditto above	(3,200)	150	Minimum impact on cost and ** schedule	Higher risk of failure since graphite untested.** Subject to oxidation in air at high temp.	4
C) Change location of seal to low pressure zone. *	Ditto above.	4,700	3,000	Probable low leakage due to low ΔP.	Requires redesign of lower shroud closure. Probable large impact on schedule.	3
D) Use welded shroud (integral with vessel)	Must provide for thermal expansion of shroud with vessel	(9,300)	4,600	1) No leakage. 2) Good reliability since all-metal shroud minimizes wear.	1) Shroud must be used as susceptor, which prescribes material & thickness of shroud. 2) Additional welds to vessel wall required. 3) Cannot separate shroud and vessel for inspection/maintenance	1

* If leakage excessive, provide two seals with interspace pressurized with air at pressure > shroud pressure.

** Ref: [redacted]:NWJ:18:77

IDEAS REARRANGE & COMBINE	MODIFY & ADD CONSTRAINTS	Δ COST $ UNIT	Δ COST $ IMPL.	ADVANTAGES	DISADVANTAGES	RATING
MAIN VESSEL FLANGES (1)						
Provide refractory distributor cone, i.e., ceramic, or use Hastelloy cone with vapor-deposited tungsten carbide	Method of attachment must be developed.	Cost not estimated. Method rejected for technical reasons.		Eliminate need for distributor replacement due to burn-through. Hence eliminate lower flanges.	Refractory material brittle. Methods of fabrication and attachment to burner must be developed. ∴ higher risk. Does not solve problem of agglomerates.	Low. This concept will not be evaluated further due to its failure to deal with agglomerates.
A) Relocate lower 14" remote flange to cooler zone below distributor. Eliminate 14" swing-bolt conn. & 1-1/2" Grayloc on vertex line inside distr. assembly.	If cone must be replaced, replace entire cone assembly.	(24,800)	4,400	Eliminates 1 flange. (2) Reduces cost of 14" remote clamp. Low risk.	Implementation cost high. Requires redesign of distributor assembly.	1
B) Eliminate cone distributor. Use multiple gas entry ports or nozzles.	Mixing/low axial & radial ΔT's must be maintained.	(34,600)	4,600	Possible reduced distr. cost?	High risk since mixing characteristics must be demonstrated.	2
SMALL FLANGES						
C) Use Tri-Clover clamps.	Remote maintenance fixtures and/or techniques required.	(4,600)	2,400	Low cost.	Require adaptation to remote maintenance & to process cond.	1
D) Cut pipe and re-weld		(4,500)	800	Low initial capital cost. No leakage.	Remote maint. procedures difficult. Q.A. of welds costly.	2

(1) Top flange (18" Grayloc remote clamp) no longer required for maintenance based on Pilot Plant experience. Hence, it is assumed to be deleted in all cases. Lower flanges (14" Grayloc remote clamp and 14" Grayloc swing-bolt connection required for access to cone distributor).

(2) 1-1/2" remote disconnect is moved outside distributor assembly.

EVALUATION PHASE

IDEA EVALUATION

DESIGN FEATURE: METHOD OF COOLING BURNER (#5)

REFERENCE: EXTERNAL COOLING SHROUD

IDEAS - ARRANGE & COMBINE	MODIFY & ADD CONSTRAINTS	Δ COST $ UNIT	Δ COST $ IMPL.	ADVANTAGES	DISADVANTAGES	RATING
A) Use internal heat exchanger	Must not adversely affect bed fluidization characteristics. Max. axial bed temperature gradient ± 100°C.	(53,100)	59,000	Quicker response time than external cooling. Also, lower cost of cooling subsystem? Vertical tubes dampen slugging. High pressure coolant can be used.	May adversely affect fluidization characteristics. Burner capacity reduced at same diameter; or larger diameter burner required.	1
B) Use cooling tubes imbedded in vessel wall.	Wall thickness must be enough to withstand max. internal/external pressure. Local wall stresses must not exceed allowable.	(19,000)	119,000	Quicker response time. No adverse effect on bed fluidization characteristics. No increase in burner diameter (I.D.) required. High pressure coolant can be used.	Requires thicker burner wall. Cost may be high. May introduce tube wall stresses that are unacceptable. Requires taller burner to transfer heat.	2

EVALUATION PHASE

IDEA EVALUATION

DESIGN FEATURE: RECYCLE FINES COOLING (#6)

CAPABILITY

IDEAS - ARRANGE & COMBINE	MODIFY & ADD CONSTRAINTS	Δ COST $		ADVANTAGES	DISADVANTAGES	RATING
		UNIT	IMPL.			
A)						
Cool and/or re-design rotary valve. Design other components for high temperature (700°C filter, 750°C cyclone & interconnecting pipe).	Internal fines hopper temperature must be <475°C.	25,000	2,300	Valve life & system reliability improved.	Higher cost for cyclone, filter, and piping in fines system.	1

EVALUATION PHASE

IDEA EVALUATION

DESIGN FEATURE: METHOD OF WASTE HEAT REJECTION TO ENVIRONMENT (#7)

IDEAS - ARRANGE & COMBINE	MODIFY & ADD CONSTRAINTS	Δ COST $ UNIT	Δ COST $ IMPL.	ADVANTAGES	DISADVANTAGES	RATING
A) Cool the equipment rejecting heat to the environment.	Hot cell temp. limit 120°F. Design guideline for max. vent. air ΔT = 30°F.	8,000	1) 4,600	Better control of equipment temperatures.	1) System more complex, less reliable due to more equipment/ controls.	1
			2)	Waste heat recovery possible.		
			3)	Cheaper materials can be used.		
B) Provide for additional cooling of hot cell via HVAC system.	Max. heat load on hot cell ventilation system shall not be exceeded.	120,000	1) 6,400	System less complex, more reliable.	1) Less control of equipment temps.	2
					2) No waste heat recovery.	
					3) May need larger cell ventilation system and/ cooling capacity	

EVALUATION PHASE

IDEA EVALUATION

DESIGN FEATURE: METHOD OF VESSEL THERMOCOUPLE ATTACHMENT (#8)

IDEAS - ARRANGE & COMBINE	MODIFY & ADD CONSTRAINTS	Δ COST $ UNIT (1)	Δ COST $ IMPL.	ADVANTAGES	DISADVANTAGES	RATING
A)				1) T/C's can be easily re-	1) Spring tension may not be	1
Use spring-loaded thermo-	Must sense outer vessel	915	--	placed. 2) No welding	enough to en- sure good con-	
couples (T/C).	surface temp. within ±10°C.			on vessel re- quired.	tact with vessel, i.e.,	
				3) More uniform contact with	accuracy of measurement.	
				vessel pos- sible.		
B)						
Weld pad to out- side of vessel.	Must sense metal temp.	922	--	1) Good accuracy of measure-	1) Requires extensive	2
Weld metal T/C sheath to pad	within ±10°C.			ment pos- sible.	welding on vessel.	
for >1".				2) Contact is mechanically	2) Relocation of	
				strong.	T/C's is ex- tensive and	
					takes more time than spring-	
					loaded T/C's.	

(1) For 25 vessel T/C's.

EVALUATION PHASE

IDEA EVALUATION

DESIGN FEATURE: METHOD OF FABRICATION OF SUSCEPTOR. (#9)

IDEAS - ARRANGE & COMBINE	MODIFY & ADD CONSTRAINTS	COST UNIT	COST IMPL.	ADVANTAGES **	DISADVANTAGES **	RATING
Centrifugal Casting	I.D. ± 0.03"* O.D. ± 0.03"	(1)	(1)	Cost ??	(1) Requires more machining	2
					(2) Metal waste??	
					(3) Tolerances a problem?	
					(4) Casting may not be possible for Hastelloy X.	
Forging	Ditto			Cost???	(1) Requires more machining	3
					(2) Metal waste??	
					(3) Tolerances a problem?	
Use non-magnetic 300 series stainless steel. Roll and weld as done now.	Ditto			Cost lower than RA-333 susceptor, since 300SS tube easier to fabricate.	Lower strength than Hastelloy X. May warp unless properly supported.	1

*Based on 40-cm primary burner spec. Tolerance could probably be relaxed to ∿1/16".

**With respect to rolled and welded plate or sheet reference).

(1) Highly variable, depending on supplier. Must be estimated at time of actual prototype design.

EVALUATION PHASE

IDEA EVALUATION

DESIGN FEATURE: BURNER LENGTH (#10)

IDEAS - ARRANGE & COMBINE	MODIFY & ADD CONSTRAINTS	Δ COST $ UNIT	Δ COST $ IMPL.	ADVANTAGES	DISADVANTAGES	RATING
A) Enlarge upper section of burner.	Should be equivalent to L/D ≈ 15 for straight tube to reduce particle carry-over due to slugging.	25,000	3,000	1) No increase in cell height required. 2) No increase in burner ΔP.	1) May not be as efficient in capturing slugged particles as longer tube. 2) Criticality must be considered; may dictate upper limit on diameter. 3) Fabrication may be a problem. 4) Fines "fall-back" (puts out bed combustion) may be a problem.	1
B) Lengthen burner	Increase L/D from 10 to ∿15.	10,000	1,500	1) High probability of success due to scaleup data. 2) Accountability remains good.	1) Increase in cell height required. 2) Increase in burner ΔP. 3) Particle breakage might be higher.	2
C) Use existing burner (L/D = 10) with baffles in top section.	Same as (1) above.	1,200	3,000	1) No increase in cell height.	1) Increase in burner ΔP. 2) Accountability may be a problem. 3) Particle breakage might be higher. 4) Fabrication more expensive.	3

EVALUATION PHASE

IDEA EVALUATION

DESIGN FEATURE: TYPE OF BURNER INSULATION (#11)

IDEAS - ARRANGE & COMBINE	MODIFY & ADD CONSTRAINTS	COSTS $ UNIT	COSTS $ IMPL.	ADVANTAGES	DISADVANTAGES	RATING
Ceramic(Existing)	Maximum burner wall	4,800	--	1) Allows separate	1) Brittle 2) Cannot be lifted	2
	temperature 900°C (1650°F)			removal of insulator &	without support underneath.	
	under all normal operating modes.			susceptor. 2) Good resis-	3) Higher thermal conductivity.	
				tance to erosive (high)	4) Higher material cost.	
				gas veloci- ties.		
				3) Low water absorption.		
A)						
Fiber	Ditto	2,000	2,400	1) Not brittle	1) Less resistance to gas erosion.	1
				2) Lower thermal conductivity.	2) High water ab- sorption.	
				3) Lower material cost.		

EVALUATION PHASE

IDEA EVALUATION

DESIGN FEATURE: METHOD OF HEATING BURNER (#12)

IDEAS & ARRANGE & COMBINE	MODIFY & ADD CONSTRAINTS	COST, $ UNIT	COST, $ IMPL.	ADVANTAGES	DISADVANTAGES	RATING
Induction Heating[3]	Maximum heatup time (TBD) hours.	86,800	--	1) Smaller burner dia.[2] or lower pressure for the same capacity. 2) Faster heatup[1] 3) Better off-gas O_2 control during tailburning.	1) High cost. 2) No waste heat recovery. 3) Remote maintenance complicated by proximity to burner. 4) Complex burner shroud required.	1
A) CO_2 Preheat[3]	Ditto	25,000	56,000	1) Eliminates costly induction heating system. 2) Allows some waste heat recovery. 3) Simplifies remote maintenance. 4) Simplifies shroud. 5) Increases TDH without increase in L/D by lowering bed height.	1) Possible increase in burner pressure to hold constant diameter[2] 2) Longer heatup time.[1] 3) Poorer off-gas O_2 control during tailburn. 4) Overall control difficult, esp. during startup. 5) Hotter vessel wall reduces margin allowed for temperature excursions.	2

1) Induction-heated startup is faster for small burners of I.D. <24 in.
2) Criticality may dictate burner diameter, i.e. favor smaller I.D. (which favors induction heater for quick heatup).
3) An electrical resistance heater to preheat CO_2 may be advantageous in both cases to increase system reliability and/or to reduce heatup time.

EVALUATION PHASE

IDEA EVALUATION

DESIGN FEATURE: TYPE OF BONNET ASSEMBLY (#13)

IDEAS - ARRANGE & COMBINE	MODIFY & ADD CONSTRAINTS	COST, $		ADVANTAGES	DISADVANTAGES	RATING
		UNIT	IMPL.			
Unitized Cap Insulator Assembly		1,100	--	1) Cheaper to fabricate.	1) Requires more time to remove	
(Present 40-cm. Primary Burner)				2) Cheaper fixtures required to remove.	for maintenance.	
A)						
Split-dome Cap Insulator Ass'y.		13,300*	2,000	1) Requires less time for removal for maintenance.	1) More expensive fixtures required to remove. 2) More expensive to fabricate.	
(present 20-cm. secondary burner)						

*Based on fabrication cost of ~$13,170 for 524740-1 and 524741-1 (per G. Watson, C.M.D.), consisting of 326 m.h. labor and $550 materials.

APPENDIX VI

COMPARISON OF ALTERNATIVE DESIGNS

IDEA SELECTION WORKSHEET

DESIGN FEATURE #1 - SHROUD SEPARABILITY

RATE FROM 10 (EXCELLENT) TO 0 (POOR)

EVALUATIVE CRITERIA	WEIGHT OF IMPORTANCE	BEST ALTERNATIVES FROM 'T' CHART WORKSHEETS			
		IDEA A	IDEA B	IDEA C	PRESENT
MAINTAINABILITY	9	9 / 81	10 / 90	7 / 63	5 / 45
EFFECT ON BURNER OPERATION AND PERFORMANCE	9	7 / 63	6 / 54	10 / 90	10 / 90
EASE OF IMPLEMENTATION IN PILOT PLANT	8	3 / 24	3 / 24	7 / 56	10 / 80
IMPACT OF CHANGE ON HRDF DESIGN	7	5 / 35	5 / 35	7 / 49	10 / 70
ERDA ACCEPTANCE	10	9 / 90	5 / 50	7 / 70	8 / 80
TOTAL—WEIGHTED FACTORS	X	293	253	328	365
COST (ESTIMATED) $, PER BURNER	X	120,800	78,800	140,550	149,900 (1)
WT. FACTOR / COST RATIO x 10^3	X	2.4	3.2	2.3	2.4

(1) Induction heating system + upper and lower cooling shrouds.

IDEA SELECTION WORKSHEET

DESIGN FEATURE #2 - UPPER SHROUD DOORS

RATE FROM 10 (EXCELLENT) TO 0 (POOR)

EVALUATIVE CRITERIA	WEIGHT OF IMPORTANCE	BEST ALTERNATIVES FROM 'T' CHART WORKSHEETS			
		IDEA A	IDEA B	IDEA C	PRESENT
MAINTAINABILITY	7	6 / 42	7 / 49		8 / 56
EASE OF BURNER INSTALLATION	9	9 / 81	9 / 81		5 / 45
EASE OF IMPLEMENTATION IN PILOT PLANT	8	8 / 64	7 / 56		10 / 80
IMPACT OF CHANGE ON HRDF DESIGN	7	10 / 70	10 / 70		10 / 70
ERDA ACCEPTANCE	10	7 / 70	8 / 80		9 / 90
TOTAL-WEIGHTED FACTORS	X	327	336		341
COST (ESTIMATED) $, PER BURNER	X	60,000	34,000		63,100 (1)
WT. FACTOR / COST RATIO x 10^3	X	5.5	9.9		5.4

(1) Upper & Lower Cooling Shrouds

IDEA SELECTION WORKSHEET

DESIGN FEATURE #2 - LOWER PLENUM DOORS

RATE FROM 10 (EXCELLENT) TO 0 (POOR)

EVALUATIVE CRITERIA	WEIGHT OF IMPORTANCE	BEST ALTERNATIVES FROM 'T' CHART WORKSHEETS			
		IDEA C	IDEA D	IDEA	PRESENT
MAINTAINABILITY	7	7 / 49	5 / 35		8 / 56
EASE OF BURNER INSTALLATION	9	8 / 72	5 / 45		5 / 45
EASE OF IMPLEMENTATION IN PILOT PLANT	8	7 / 56	3 / 24		10 / 80
IMPACT OF CHANGE ON HRDF DESIGN	7	9 / 63	5 / 35		10 / 70
ERDA ACCEPTANCE	10	7 / 70	5 / 50		9 / 90
TOTAL-WEIGHTED FACTORS	X	310	188		341
COST (ESTIMATED) $, PER BURNER	X	58,400	69,600		63,100 (1)
WT. FACTOR / COST RATIO x 10^3	X	5.3	2.7		5.4

(1) Upper and Lower Cooling Shrouds

IDEA SELECTION WORKSHEET

DESIGN FEATURE #3 - SLIDING SEAL

RATE FROM 10 (EXCELLENT) TO 0 (POOR)

EVALUATIVE CRITERIA	WEIGHT OF IMPORTANCE	BEST ALTERNATIVES FROM 'T' CHART WORKSHEETS				
		IDEA A	IDEA B	IDEA C	IDEA D	PRESENT
BURNER/SHROUD MAINTAINABILITY	9	9 / 81	9 / 81	9 / 81	3 / 27	9 / 81
SEAL PERFORMANCE	9	10 / 90	5 / 45	9 / 81	10 / 90	7 / 63
EASE OF IMPLEMENTATION IN PILOT PLANT	8	7 / 56	9 / 72	7 / 56	5 / 40	10 / 80
IMPACT OF CHANGE ON HRDF DESIGN	7	9 / 63	10 / 70	8 / 56	4 / 28	10 / 70
ERDA ACCEPTANCE	10	10 / 100	5 / 50	9 / 90	5 / 50	8 / 80
TOTAL-WEIGHTED FACTORS	X	390	318	364	235	374
COST (ESTIMATED) $, PER BURNER	X	24,050	16,150	214,050	10,050	19,350 (1)
WT. FACTOR / COST RATIO x 10^3	X	16	20	15	23	19

(1) Sliding Seal + Shroud Separability Cost (Feature #1) + Hinged Doors on Upper/Lower Cooling Shrouds.

IDEA SELECTION WORKSHEET

DESIGN FEATURE #4 - MAIN VESSEL FLANGES

RATE FROM 10 (EXCELLENT) TO 0 (POOR)

EVALUATIVE CRITERIA	WEIGHT OF IMPORTANCE	BEST ALTERNATIVES FROM 'T' CHART WORKSHEETS			
		IDEA A	IDEA B	IDEA C	PRESENT
MAINTAINABILITY	9	9 / 81	10 / 90		7 / 63
IMPACT ON BURNER OPERATION/ PERFORMANCE	9	10 / 90	3 / 27		10 / 90
EASE OF IMPLEMENTATION IN PILOT PLANT	8	9 / 72	3 / 24		10 / 80
IMPACT OF CHANGE ON HRDF DESIGN	7	7 / 49	3 / 21		10 / 70
ERDA ACCEPTANCE	10	10 / 100	3 / 30		10 / 100
TOTAL-WEIGHTED FACTORS	X	392	192		403
COST (ESTIMATED) $, PER BURNER	X	56,100	46,300		80,900
WT. FACTOR / COST RATIO x 10^3	X	7.0	4.1		5.0

IDEA SELECTION WORKSHEET

DESIGN FEATURE #4 - SMALL FLANGES

RATE FROM 10 (EXCELLENT) TO 0 (POOR)

EVALUATIVE CRITERIA	WEIGHT OF IMPORTANCE	BEST ALTERNATIVES FROM 'T' CHART WORKSHEETS			
		IDEA C	IDEA D	IDEA	PRESENT
MAINTAINABILITY	9	7 / 63	3 / 27		9 / 81
EASE OF IMPLEMENTATION IN PILOT PLANT	8	5 / 40	7 / 56		10 / 80
IMPACT OF CHANGE ON HRDF DESIGN	7	7 / 49	5 / 35		10 / 70
ERDA ACCEPTANCE	10	8 / 80	6 / 60		10 / 100
TOTAL-WEIGHTED FACTORS	X	232	178		331
COST (ESTIMATED) $, PER BURNER	X	4,200	4,300		8,800
WT. FACTOR / COST RATIO x 10^3	X	55	41		38

IDEA SELECTION WORKSHEET

DESIGN FEATURE #5 - METHOD OF COOLING

RATE FROM 10 (EXCELLENT) TO 0 (POOR)

EVALUATIVE CRITERIA	WEIGHT OF IMPORTANCE	BEST ALTERNATIVES FROM 'T' CHART WORKSHEETS			
		IDEA A	IDEA B	IDEA C	PRESENT
PROCESS (COOLING) PERFORMANCE CHARACTERISTICS (INC. FLUIDIZATION)	10	7 / 70	8 / 80		9 / 90
MAINTAINABILITY	9	5 / 45	10 / 90		9 / 81
EASE OF IMPLEMENTATION IN PILOT PLANT	8	4 / 32	4 / 32		10 / 80
IMPACT OF CHANGE ON HRDF DESIGN	7	7 / 49	7 / 49		10 / 70
ERDA ACCEPTANCE	10	5 / 50	5 / 50		9 / 90
TOTAL-WEIGHTED FACTORS	X	246	301		411
COST (ESTIMATED) $, PER BURNER	X	10,000	44,100		63,100 (1)
WT. FACTOR / COST RATIO x 10^3	X	25	6.8		6.5

(1) Upper and Lower Cooling Shrouds.

IDEA SELECTION WORKSHEET

DESIGN FEATURE #6 - FINES COOLING

RATE FROM 10 (EXCELLENT) TO 0 (POOR)

EVALUATIVE CRITERIA	WEIGHT OF IMPORTANCE	BEST ALTERNATIVES FROM 'T' CHART WORKSHEETS			
		IDEA A	IDEA B	IDEA C	PRESENT
MAINTAINABILITY	9	9 / 81			5 / 45
RELIABILITY	9	10 / 90			5 / 45
EFFECT ON BURNER OPERATION	9	9 / 81			6 / 54
EASE OF IMPLEMENTATION IN PILOT PLANT	8	6 / 48			10 / 80
IMPACT OF CHANGE ON HRDF DESIGN	7	7 / 49			10 / 70
ERDA ACCEPTANCE	10	10 / 100			6 / 60
TOTAL-WEIGHTED FACTORS	X	449			354
COST (ESTIMATED) $, PER BURNER	X	34,200			9,200 (1)
WT. FACTOR / COST RATIO x 10^3	X	13			38

(1) Cyclone, Filter, Fines Rotary Valve.

IDEA SELECTION WORKSHEET

DESIGN FEATURE #7 - WASTE HEAT REJECTION

RATE FROM 10 (EXCELLENT) TO 0 (POOR)

EVALUATIVE CRITERIA	WEIGHT OF IMPORTANCE	BEST ALTERNATIVES FROM 'T' CHART WORKSHEETS			
		IDEA A	IDEA B	IDEA C	PRESENT
RELIABILITY	8	8 / 64	9 / 72		7 / 56
EFFECT OF CHANGE ON BURNER OPERATION	9	9 / 81	7 / 63		7 / 63
EASE OF IMPLEMENTATION IN PILOT PLANT	6	6 / 36	0 / 0		10 / 60
IMPACT OF CHANGE ON HRDF DESIGN	9	7 / 63	2 / 18		10 / 90
ERDA ACCEPTANCE	10	9 / 90	9 / 90		5 / 50
TOTAL-WEIGHTED FACTORS	X	334	243		319
COST (ESTIMATED) $, PER BURNER	X	7.54×10^6	7.65×10^6		7.53×10^6 (1)
WT. FACTOR / COST RATIO $\times 10^5$	X	4.4	3.2		4.2

(1) HRDF Burner Cyclone, Filter, Piping, and HVAC System.

IDEA SELECTION WORKSHEET

DESIGN FEATURE #8 - VESSEL THERMOCOUPLES

RATE FROM 10 (EXCELLENT) TO 0 (POOR)

EVALUATIVE CRITERIA	WEIGHT OF IMPORTANCE	BEST ALTERNATIVES FROM 'T' CHART WORKSHEETS			
		IDEA A	IDEA B	IDEA C	PRESENT
EASE OF INSTALLATION	9	10 / 90	6 / 54		7 / 63
RELIABILITY	9	7 / 63	10 / 90		9 / 81
EASE OF IMPLEMENTATION IN PILOT PLANT	8	9 / 72	6 / 48		10 / 80
IMPACT OF CHANGE ON HRDF DESIGN	7	10 / 70	10 / 70		10 / 70
ERDA ACCEPTANCE	10	7 / 70	10 / 100		9 / 90
TOTAL-WEIGHTED FACTORS	X	365	362		384
COST (ESTIMATED) $, PER BURNER	X	915	922		1,540
WT. FACTOR / COST RATIO X 10	X	4.0	3.9		2.5

IDEA SELECTION WORKSHEET

DESIGN FEATURE #10 - BURNER LENGTH

RATE FROM 10 (EXCELLENT) TO 0 (POOR)

EVALUATIVE CRITERIA	WEIGHT OF IMPORTANCE	BEST ALTERNATIVES FROM 'T' CHART WORKSHEETS			
		IDEA A	IDEA B	IDEA C	PRESENT
EFFECT OF CHANGE ON BURNER PERFORMANCE	9	9 / 81	7 / 63	3 / 27	1 / 9
EASE OF IMPLEMENTATION IN PILOT PLANT	8	3 / 24	4 / 32	9 / 72	10 / 80
IMPACT OF CHANGE ON HRDF DESIGN	7	9 / 63	7 / 49	10 / 70	10 / 70
ERDA ACCEPTANCE	10	9 / 90	10 / 100	6 / 60	9 / 90
TOTAL-WEIGHTED FACTORS	X	264	244	229	249
COST (ESTIMATED) $, PER BURNER	X	92,200	77,200	68,400	67,200 (1)
WT. FACTOR / COST RATIO x 10^3	X	2.9	3.2	3.3	3.7

(1) Fabricated and Installed Burner Tube.

IDEA SELECTION WORKSHEET

DESIGN FEATURE #11: TYPE OF BURNER INSULATION

RATE FROM 10 (EXCELLENT) TO 0 (POOR)

EVALUATIVE CRITERIA	WEIGHT OF IMPORTANCE	BEST ALTERNATIVES FROM 'T' CHART WORKSHEETS			
		IDEA A	IDEA B	IDEA C	PRESENT
BURNER SYSTEM MAINTAINABILITY	9	7 / 63			10 / 90
INSULATION CHARACTERISTICS	9	10 / 90			9 / 81
EASE OF IMPLEMENTATION IN PILOT PLANT	8	7 / 56			10 / 80
IMPACT OF CHANGE ON HRDF DESIGN	7	9 / 63			10 / 70
ERDA ACCEPTANCE	10	9 / 90			10 / 100
TOTAL—WEIGHTED FACTORS	X	362			421
COST (ESTIMATED) $, PER BURNER	X	2,000			4,800
WT. FACTOR / COST RATIO X 10	X	1.8			0.9

IDEA SELECTION WORKSHEET

DESIGN FEATURE #12: METHOD OF HEATING BURNER

RATE FROM 10 (EXCELLENT) TO 0 (POOR)

EVALUATIVE CRITERIA	WEIGHT OF IMPORTANCE	BEST ALTERNATIVES FROM 'T' CHART WORKSHEETS			
		IDEA A	IDEA B	IDEA C	PRESENT
MAINTAINABILITY	9	9 / 81			6 / 54
RELIABILITY	9	9 / 81			9 / 81
EFFECT ON BURNER PERFORMANCE	9	8 / 72			10 / 90
EASE OF IMPLEMENTATION IN PILOT PLANT	8	6 / 48			10 / 80
IMPACT OF CHANGE ON HRDF DESIGN	7	6 / 42			10 / 70
ERDA ACCEPTANCE	10	9 / 90			10 / 100
TOTAL-WEIGHTED FACTORS	X	414			475
COST (ESTIMATED) $, PER BURNER	X	25,000			86,800
WT. FACTOR / COST RATIO $\times 10^2$	X	1.7			0.5

IDEA SELECTION WORKSHEET

DESIGN FEATURE #13: TYPE OF BONNET ASSEMBLY

RATE FROM 10 (EXCELLENT) TO 0 (POOR)

EVALUATIVE CRITERIA	WEIGHT OF IMPORTANCE	BEST ALTERNATIVES FROM 'T' CHART WORKSHEETS			
		IDEA A	IDEA B	IDEA C	PRESENT
MAINTAINABILITY	9	9 / 81			7 / 63
EASE OF FABRICATION	9	5 / 45			10 / 90
EASE OF IMPLEMENTATION IN PILOT PLANT	8	6 / 48			10 / 80
IMPACT OF CHANGE ON HRDF	7	9 / 63			10 / 70
ERDA ACCEPTANCE	10	9 / 90			10 / 100
TOTAL—WEIGHTED FACTORS	X	327			403
COST (ESTIMATED) $, PER BURNER	X	13,300			1,100
WT. FACTOR / COST RATIO X 10	X	0.25			3.7