WSRC-RP--89-1199

DE93 000787

Derivative Classifier: D. Moore, Manager SRL-ESS

WSRC-RP-89-1199

GROUNDWATER QUALITY ASSESSMENT/ CORRECTIVE ACTION FEASIBILITY PLAN

Savannah River Laboratory Seepage Basins (U)

November 15, 1989

R. L. Nichols

DISCLAIMER

This report was prepared as an account of work sponsored by an agency of the United States Government. Neither the United States Government nor any agency thereof, nor any of their employees, makes any warranty, express or implied, or assumes any legal liability or responsibility for the accuracy, completeness, or usefulness of any information, apparatus, product, or process disclosed, or represents that its use would not infringe privately owned rights. Reference herein to any specific commercial product, process, or service by the trade name, trademark, manufacturer, or otherwise, does not necessarily constitute or imply its endorsement, recommendation, or favoring by the United States Government or any agency thereof. The views and opinions of authors expressed herein do not necessarily state or reflect those of the United States Government or any agency thereof.

Approved by: D. B. Moore, Manager
Environmental Sciences Section
Savannah River Laboratory

WESTINGHOUSE SAVANNAH RIVER COMPANY
SAVANNAH RIVER SITE
AIKEN, SC 29808

Prepared for the U. S. Department of Energy under Contract No. DE-AC09-89SR18035

TABLE OF CONTENTS

LIST OF TABLES ii

LIST OF FIGURES iii

EXECUTIVE SUMMARY 1

INTRODUCTION 1

HYDROGEOLOGY 1
- Uppermost Aquifer System 2
- Ellenton Confining System 3
- Cretaceous Age Aquifer System 3

GROUNDWATER CHARACTERIZATION 3
- Monitoring Well Network 4
- Groundwater Detection Monitoring Program 4
- Data Screening 4
- Statistical Methods 6
- Comparison with Regulatory Standards 6
- Assessment of Groundwater Quality 7

GROUNDWATER QUALITY SUMMARY 10

PROGRAM TO DETERMINE HORIZONTAL AND VERTICAL EXTENT OF CONTAMINATION 11
- Organic Constituents 11
- Inorganic Constituents 11
- Hazardous Constituents 13

CORRECTIVE ACTION FEASIBILITY PLAN 13

SCHEDULE 13

REFERENCES 14

APPENDIX A

APPENDIX B

APPENDIX C

LIST OF TABLES

Table 1: List of parameters analyzed for in Groundwater Detection Monitoring at the SRL Basins. 15

Table 2: List of constituents analyzed for and never detected. 16

Table 3: List of constituents detected and not present in concentrations significantly different from background. 17

Table 4: Summary of constituents/ indicators detected in the groundwater in concentrations significantly above background in the SRL Basin Groundwater Detection Monitoring Network. 18

LIST OF FIGURES

Figure 1: Location of the SRL Basins in the A/M Area. 19

Figure 2: Hydrogeologic section in the vicinity of the SRL Basins. 20

Figure 3: Potentiometric map of the Water Table in the vicinity of the SRL Basins. 21

Figure 4: Location of groundwater detection monitoring wells at the SRL Basins. 22

Figure 5: Specific Conductance verses Time at the SRL Basin detection monitoring wells. 23

Figure 6: Sodium Ion Concentration verses Time at the SRL Basin detection monitoring wells. 24

Figure 7: Chloride Ion Concentration verses Time at the SRL Basin detection monitoring wells. 25

Figure 8: Potentiometric map for the upper portion of the Congaree Aquifer. 26

Figure 9: Decision tree for reporting results of Appendix IX analyses. 27

Figure 10: Timetable for performing assessment of vertical migration. 28

Figure 11: Identification of wells used to prepare the Upper Congaree Potentiometric Map. 29

EXECUTIVE SUMMARY

The Savannah River Laboratory (SRL) Seepage Basins are located in the northeastern section of the 700 Area at the Savannah River Site. Currently the four basins are out of service and are awaiting closure in accordance with the Consent Decree settled under Civil Act No. 1:85-2583. Groundwater monitoring data from the detection monitoring network around the SRL Basins was recently analyzed using South Carolina Hazardous Waste Management Regulations R.61-79.264.92 methods to determine if groundwater in the immediate vicinity of the SRL Basins had been impacted. Results from the data analysis indicate that the groundwater has been impacted by both volatile organic constituents (VOCs) and inorganic constituents. The VOCs, specifically trichloroethylene and tetrachloroethylene, are currently being addressed under the auspices of the SRS Hazardous Waste Permit Application (Volume III, Section J.6.3). The impacts resulting from elevated levels of inorganic constituents, such as barium, calcium, and zinc in the water table, do not pose a threat to human health and the environment. In order to determine if vertical migration of the inorganic constituents has occurred three detection monitoring wells are proposed for installation in the upper portion of the Congaree Aquifer.

INTRODUCTION

The Savannah River Laboratory (SRL) Seepage Basins are located in the northeastern section of the 700 Area at the Savannah River Site (Figure 1). Non-hazardous low-level radioactive (<100 d/m/ml alpha and <50 d/m/ml beta-gamma) wastewaters were discharged to the SRL Basins. Currently the four basins are out of service and are awaiting closure in accordance with the Consent Decree settled under Civil Act No. 1:85-2583. This document was prepared to fulfill the requirements of Section VI.B of the consent decree.

HYDROGEOLOGY

The A/M Area is underlain by two aquifer systems. Within the uppermost aquifer system there are two subsystems: the Water Table Zone and the semi-confined "Congaree Aquifer" (Figure 2). The other aquifer system represented in the A/M Area is the Cretaceous Age Aquifer System. The aquifer systems are separated by the "Ellenton" confining system. The subsystems in the uppermost aquifer are separated by the "Green Clay " confining unit.

Uppermost Aquifer System

The Uppermost Aquifer System varies from 85 to 120 feet thick and consists of a clastic sequence of sand, silt and clay that includes fluvial and shallow marine sediments.

Water Table Zone

The Water Table Zone consists of interlayered sand, silt and clay layers. Fine- to medium-grained sand predominates in this zone and comprises the upper sandy, non-calcareous units of the Santee Formation. The Water Table Zone is approximately 20 feet thick in the vicinity of the SRL Basins based on the top of the confining "Green Clay" and the free water surface. "D" wells are screened in the Water Table Zone (Figure 2). The water table is mounded south of the SRL Basins and as a result the groundwater flow direction varies from west to north-northeast in the vicinity of the SRL Basins (Figure 3). The mounding in the water table is the result of recharge from a losing stream which runs just east and south of the SRL Basins.

"Green Clay" Confining Unit

The confining "Green Clay" consists of interlayered clay and silty clay layers with interbedded glauconite and comprises the lower portion of the Santee Formation. The unit varies from 3 to 20 feet thick in A/M Area and generally maintains the ability to separate water bearing zones.

"Congaree Aquifer"

The Congaree aquifer underlies the water table and is separated from it by the confining "Green Clay". This zone is a semi-confined aquifer that varies from 50 to 95 feet thick. Stratigraphically the aquifer consists of the Congaree Formation of the Orangeburg Group and the sandy, updip equivalents of the Black Mingo Group.

Lithologically the zone consists of well-sorted, fine- to coarse-grained sand with subordinate interlayered silt and clay layers and some pebble layers. These sediments, in conjunction with a few fossils suggest a shallow marine depositional environment for the Congaree formation and an upper delta plain environment for the Black Mingo Group equivalents. "C" wells are typically screened in the uppermost portion of this aquifer whereas "B" wells are typically screened in the lower portion. Groundwater flow in the Congaree is east-southeast towards Upper Three Runs Creek which is a local discharge point.

Ellenton Confining System

The "Ellenton" confining system separates the Cretaceous Aquifer System from the Uppermost Aquifer System with a sequence of interlayered clay, silty clay, silt and sand layers. These sediments comprise the Ellenton Member of the Black Mingo Group and represent a lower delta plain depositional environment.

The upper portions of the Peedee Formation are also a part of this confining system. In the A/M Area the confining system varies from 5 to 75 feet thick.

"A" wells are typically screened in sandy layers within the Ellenton. This position monitors the integrity of the separation between the Uppermost Aquifer System and the underlying Cretaceous Age Aquifer System. Lithologic units of Ellenton are consistently traceable from one well to another in the A/M Area.

Cretaceous Age Aquifer System

The Cretaceous Age Aquifer System, composed of a series of aquifers, is the lower aquifer system in A/M Area. On a larger scale than the study area, and in the northern part of the Savannah River Site these aquifers may not be separated by any mappable confining unit. However, in the study area, on a local scale the system can be differentiated into separate aquifers. TA wells are screened in the upper portion of the aquifer which is stratigraphically equivalent to the Steel Creek Member of the Peedee Formation.

The upper portions of the Steel Creek Member are clay and silt layers interlayered with some sand layers. These lithologic units are part of the overlying "Ellenton" Confining System. The lower portion of the Steel Creek Member represents the aquifer. It consists of medium- to coarse-grained quartz sand and silty sand layers with some pebble-rich layers. The sand layers fine upward from very coarse, gravelly sand to fine, muddy sand. At A/M Area the Steel Creek Member is less than 70 feet thick and is consistently observed across the study area.

GROUNDWATER CHARACTERIZATION

There are six water table monitoring wells in the vicinity of the SRL Seepage Basins that have been monitored quarterly for a wide range of constituents. The data collected from these wells have been analyzed statistically and compared with regulatory standards. The results of that analysis are discussed in the following text.

Monitoring Well Network

A total of nine wells have been installed around the SRL Basins. Six water table monitoring wells (ASB 1A, 2A, 3A, 4, 5A, 6A) were installed immediately adjacent to the basins in 1981. Three additional water table wells (ASB 7 through 9) were installed as part of a 1983 basin characterization program (Bransford et al., 1985) and are currently part of the A/M Area plume definition well network. Locations of these wells are shown in Figure 4. Subsequent to completion of the 1983 basin characterization program, wells ASB 1, 2, 5, and 6 were replaced by monitoring wells constructed with PVC casing and equipped with dedicated submersible pumps. Wells ASB1A, ASB 2A, ASB 3A, ASB 4, ASB 5A, and ASB 6A are the protocol monitoring wells for the SRL Seepage Basins. Construction information for each water table monitoring well is presented in Appendix B. These wells have been approved for groundwater monitoring as part of the M-Area Hazardous Waste Management Facility Part B Permit.

Groundwater Detection Monitoring Program

The six groundwater detection monitoring wells are sampled quarterly and analyzed for set of parameters listed in Table 1. As specified by the Consent Decree this list is derived from the requirements of R. 61-79.265.92 (b)(1) - (3) (South Carolina Hazardous Waste Management Regulations). All detection groundwater monitoring data collected from wells ASB 1A, 2A, 3A, 4, 5A, and 6A are presented in Appendix A.

Data Screening

Appendix A contains all of the analytical data for each well used in the characterization of groundwater at the SRL Seepage Basins including field and quality assurance data. Prior to statistical analysis the data was screened according to the conventions listed below.

<u>Parameters Measured in the Field</u>

The most representative values of the indicator parameters pH and specific conductivity are obtained from measurements made in the field. Whereas additional measurements of these parameters may be made in the laboratory as a quality assurance procedure, the field values are the most representative and therefore are the only ones used in the groundwater quality assessments.

Data Selection for Non-Radiological Parameters

SRS maintains contracts with three laboratories for analyses of samples (including groundwater) for environmental assessments. The primary laboratory (Envirodyne Engineers) is responsible for performing all normally scheduled analyses. A second laboratory is contracted for overflow and special project analyses and the third laboratory for quality control. Since different methods were often used by the different laboratories, only data from the primary laboratory was used in statistical impact assessments. This procedure was adopted because any variability not related to conditions in the field will reduce the sensitivity of statistical evaluation methods. Overall, this procedure minimizes the probability that impacts to the environment will remain undetected.

Data Selection for Radiological Parameters.

Unlike the procedure for non-radiological parameters, the procedure for radiological parameters (gross alpha, non-volatile beta/gamma, total radium, and tritium) is to use all analytical data from all laboratories. This procedure is necessary because the primary radiological laboratory changed several times throughout the monitoring period.

Data Evaluation for Below Detection Level Results.

In numerous cases, the results of chemical analyses were listed as below detection limits (BDL) of the analytical method. For data sets (a particular constituent in a particular well) where fifty percent or more of the results were listed as BDL, no statistical analyses were performed for that constituent in that well. For data sets with less than fifty percent of the analytical results listed as BDL, a value of one-half of the detection level was assigned to that particular analysis and included in the statistical computation. In either case, however, all analyses were compared to promulgated health-based standards (drinking water standards, maximum contaminant levels, or SRS groundwater protection standard) to assure that no significant impacts remained undetected.

Minimum Observations for Data Evaluation.

The statistical techniques used to evaluate impacts require a minimum number of observations to validate the assumptions. Based on the requirements of the techniques, data sets with less than four sample periods (replicates counted as one sample) were not analyzed statistically. All analyses were compared with promulgated standards to assure that no significant impacts remained undetected, similar to samples with BDL results .

Data Evaluation for Replicate Samples.

As part of the SRS quality assurance program, the primary laboratory performs replicate analyses of five percent of the samples. The results of replicate analyses are averaged and the average included in the statistical analyses.

Statistical Methods

Statistical comparisons of the results from monitoring wells around the SRL Seepage Basins with background values were performed using SCHWMR R.61-79.264.92 procedures. Consistent with the Savannah River Site Hazardous Waste Permit for the M-Area, data from wells MSB 29D and MSB 43D were used as background wells for statistical comparisons. Background groundwater monitoring data is listed in Appendix A.

Statistical comparison of parameter concentrations between each downgradient well and the background wells was performed using the PROC TTEST procedure available in SAS; statistical computing software package. Unequal variances between data sets (downgradient and background) for a given parameter were accounted for by using the Satterthwaite Approximation to the Student's T-Test. A one-tailed statistical test is required for all parameters accept pH in which case a two-tailed statistical test is required.

The SAS PROC TTEST procedure calculates the probability (PROB>|t|) of making a Type 1 Error. A Type I Error occurs when the null hypothesis is rejected when in fact it is true. In the case of the SRL Seepage Basins a Type I Error would occur if it was determined that there was an adverse impact on the groundwater when in fact there was not. SCHWMR R.61-79.264.97(h) establishes the acceptable level of Type 1 Errors at 0.05. When the probability of a Type 1 Error is less than 0.05 an impact has been detected. Since SAS PROC TTEST is a two-tailed statistical test all constituents requiring a one-tailed test were compared at the 0.1 level of significance. Statistical comparisons involving pH were compared at the 0.05 level of significance. Output from the SAS TTEST comparisons is presented in Appendix A.

Comparison with Regulatory Standards

Environmental impacts can be assessed either by statistical comparison to background as discussed above or by comparison to standards promulgated by regulatory agencies. These standards include the Primary Drinking Water Standards (DWS), Maximum Contaminant Levels, and Groundwater Protection Standards defined in the Hazardous Waste Permit for SRS.

The strength of statistical evaluations is their great sensitivity to any environmental impact. Their limitation is the relatively large amount of data required for their use. In contrast, comparison to regulatory standards can be (and in this assessment was) applied to all data sets. This comparison, although not as sensitive as the statistical evaluation, ensures that impacts of potential significance to health and the environment are detected. All analyses were compared to existing promulgated standards and any exceedances were identified and their impacts discussed.

Assessment of Groundwater Quality

A groundwater quality evaluation in conformance with the requirements of R. 61-79.265.92 (b)(1) - (3) was performed using data collected form the monitoring program and data evaluation techniques described above. The data screening procedures divided the analytes into three groups:

1. Analytes which were never detected in any well at any time.

2. Analytes which were detected, but not in concentrations above background or promulgated regulatory limits.

3. Analytes detected in concentrations significantly above background or in excess of promulgated regulatory limits.

Each of these classes of data and their implications about the impacts of the SRL Basins on groundwater are discussed below.

<u>Analytes Never Detected.</u>

Of the 77 constituents and parameters monitored (Table 1), the 38 listed in Table 2 were not detected in any well at any time during the entire history of monitoring at the basins. This list includes a great percentage of the constituents commonly observed as industrial contaminants in groundwater. The absence of a diverse suite of these constituents, which is typically observed at uncontrolled waste sites, indicates that additional assessments of impact should be focused on constituents documented to be present in the waste stream.

Analytes Detected but not in Elevated Concentrations.

Of the 77 constituents and parameters monitored, the 27 listed in Table 3 were detected, but not in concentrations significantly above background or in excess of regulatory standards. Note that gross alpha and total radium data sets did contain some elevated values, but statistical analyses indicated that these were not significantly above background. Because adequate data sets existed, statistical analyses were also performed for copper, nitrate as nitrogen, lead, nonvolatile beta, total dissolved solids, and total phosphates. For each data set evaluated, the statistical analysis indicated that concentrations measured in the downgradient wells were either not significantly different from or significantly less than background.

Analytes Detected in Elevated Concentrations.

Of the 77 constituents and parameters monitored, the 12 listed in Table 4 were detected in concentrations significantly above background or in excess of a promulgated regulatory standard. The first nine parameters listed were determined to be significantly in excess of background.This list is consistent with the composition of the waste stream listed in Chapter 2 of the Technical Data Summary (TDS) for the SRL Basins. The other three elevated parameters are the volatile organic chemicals (VOCs) tetrachloroethylene and trichloroethylene and the indicator, total organic halogens (TOH) used to detect their presence. The exact source of the VOC's is not defined. Multiple known and potential sources of VOCs exist in the A/M Area and their impacts are not entirely separable. Accordingly, the Hazardous Waste Permit Application (Volume III, Section J) requires that all such contamination will be assessed and remediated under the auspices of that permit.

Spatial Distribution of Contaminants.

The groundwater flow in the water table is generally to the northwest (Figure 3). This indicates that wells ASB 5A and ASB 6A are downgradient of the basins and should be most sensitive to impacts from the basin. With the exception of iron and zinc, the contaminant summary table indicates that these wells are the most highly impacted.

The spatial distribution of VOCs in the A/M Area of SRS has been characterized by the plume definition program associated with the M-Area Hazardous Waste Management Facility. As mentioned above, the data from this program have shown that multiple known and potential sources of VOCs exist in the A/M Area and their impacts are not entirely separable.

However, the VOC contamination in the vicinity of SRL appears to be related to sources in A-Area associated with laboratory operations. The highest VOC concentrations in this area appear to be associated with past process water disposal in unlined surface drainages (e.g., Outfall A-001). The GWQA/ CAFP will describe the plume definition in this specific portion of A/M Area.

Temporal Distribution of Contaminants.

The downgradient wells most indicative of Basin impacts, ASB 5A and ASB 6A, have been used to illustrate temporal trends. The parameters specific conductance, sodium, and chloride were selected to indicate the trends because they are essentially conservative in groundwater; they are reflective of waste stream characteristics, and are not complicated by the potential for multiple sources as are the VOCs.

Figures 5, 6, and 7 are time series plots for specific conductance, sodium, and chloride, respectively. Each of these graphs shows a rise in concentrations between April and November of 1984 with a decline to relatively stable concentrations thereafter (water levels steadily decline and concentrations increase slightly between 8/85 and 4/89). The peak observed between April and November 1984 is reflective of trends in the waste stream composition discussed on page 2-3 of the TDS for the SRL Basins.

Beginning in 1982, a volume reduction program was instituted for the basins. This program, which consisted primarily of eliminating dilute noncontact cooling water, resulted in increased concentrations for the final months of basin operation. One additional peak is prominent on the graph of sodium in well ASB 6A -- the large increase measured in sodium in the first quarter of 1989. A deeper well in cluster ASB 6 (ASB 6AA) was drilled between 10/88 and 12/88. The increase in sodium in well ASB 6A during this time is likely the result of well installation activities. The grout used to seal the annulus of well ASB 6AA contains high concentrations of various ions including sodium. The correlation between quality of the basin waters and groundwater has three significant implications for future monitoring. First, it documents the sensitivity of monitoring wells to detect impacts from facility operation. Second, it documents that the impacts from the most concentrated waste have been detected. Third, it establishes the trend of water quality improvement indicating that future significant groundwater impacts are unlikely, especially if infiltration is reduced.

GROUNDWATER QUALITY SUMMARY

An extensive evaluation of groundwater quality beneath the basins was performed using data published in the Savannah River Site Annual Environmental Reports. These data were evaluated for their statistical significance relative to background and their concentration relative to promulgated regulatory standards. Spatial distributions and temporal trends were also evaluated. Of the 77 common industrial contaminants, the 38 listed on Table 2 were never detected and the 27 listed on Table 3 were present, but not in concentrations which were significantly elevated. Twelve parameters were detected in concentrations significantly above background or promulgated standards. Of these, the first nine shown on Table 4 reflect the waste disposed in both composition and in temporal variation in concentration. Also consistent with expected impacts, the greatest concentrations of these parameters were measured in downgradient wells ASB 5A and ASB 6A. Impacts from these constituents was documented to peak in late 1984, and a trend of decreasing concentrations is evident.

Values for two VOC's (trichloroethylene and tetrachloroethylene) and the indicator parameter associated with them, total organic halogens, were also elevated. Concentrations of VOC's detected in the SRL monitoring well network is greater than expected from waste stream or basin sediment characterization. Temporal concentration trends of these VOC's in groundwater do not reflect trends in waste stream composition. As a result the source of these organics could be another known or potential source in the vicinity such as the A-001 outfall. SRS has acknowledged the impacts of chlorocarbons on groundwater quality in the vicinity of the SRL Basins and demonstrated a commitment to address these impacts under the RCRA Hazardous Waste Permit for the M-Area Hazardous Waste Management Facility. Specifically, Section J of Volume III of this Permit specifically states:

> "... the Corrective Action Program for the M-Area HWMF is a specific subset of a comprehensive remedial action effort currently in progress in the A/M Areas. The remedial action program addresses other known and suspected sources of groundwater contamination (potential SWMUs), as well as the regulated unit. All of these areas will be remediated under the auspices of this permit."

The Savannah River Laboratory Basins are located in the A Area of the SRS and are, therefore, specifically included in this permit condition.

The chlorocarbons in groundwater in the vicinity of the SRL Basins are recognized impacts and their assessment and remediation have been underway since 1983. Existing and future actions are and will continue to be conducted under the auspices of the SRS RCRA Permit.

PROGRAM TO DETERMINE HORIZONTAL AND VERTICAL EXTENT OF CONTAMINATION

The elevated constituents in the groundwater beneath the SRL Basins can be separated into to 2 groups: 1) Volatile organic constituents (VOCs) and 2) Inorganic constituents. The following sections discuss the program to determine the extent of groundwater impacts from each of the aforementioned groups of constituents.

Organic Constituents

The exact source of the organic constituents is not known. Multiple known and potential sources of VOCs exist in the A/M area and their impacts are not entirely separable. The SRS Hazardous Waste Permit Application (Volume III, Section J) requires that all VOC contamination in the A/M Area be assessed and remediated under the auspices of that permit. A program to assess the rate and extent of migration of VOCs in the general 700 Area SRL facilities (Figure 1) is already in progress.

Inorganic Constituents

Horizontal Extent

Non-hazardous low-level (<100 d/m/ml alpha and <50 d/m/ml beta-gamma) radioactive wastewaters were discharged to the SRL Basins. The wastewaters discharged to the SRL Basins were solutions of inorganic salts which contained primarily Na, Al, Ca, Fe, Zn, Mn, Cl, and NO3 ions. The groundwater downgradient of the SRL Basins has been impacted by a suite of inorganic constituents consistent with the constituents disposed of in the basin. Groundwater impacts on pH and Specific Conductance can be attributed to the inorganic constituents which have impacted the groundwater at the SRL Basins (Table 4). Results from groundwater sample analyses show that none of the inorganic non-radioactive constituents which have PDWS are present at levels above the PDWS.

None of the radioactive parameters on the PDWS list were determined to be present in the groundwater at levels significantly different from background.

Quarterly sampling/ analysis for the constituents listed as

SCHWMR R.61-79.265.92 Required Parameters (Table 1) will be continued to ensure that groundwater impacts which may compromise protection of human health and the environment do not go undetected. Further assessment of the horizontal extent of groundwater impacts by inorganic constituents in the water table is not necessary at this time since existing levels of inorganic constituents do not pose a threat to human health or the environment.

Vertical Extent

Water level data from well clusters (Figure 2) indicate that there is a downward hydraulic gradient in the vicinity of the SRL Basins. In order to determine if there have been any groundwater impacts due to vertical migration of inorganic constituents 3 assessment monitoring wells are proposed for installation in the Upper Congaree. The proposed will be installed to the southeast of the SRL Basins which is downgradient for the zone being monitored. Figure 8 shows the proposed well locations. Screens for the new wells will be installed immediately beneath the confining unit which separates the water table and the underlying semi-confined aquifer (Figure 2). DPSOP 254 well installation procedures will be followed during the installation of the new monitoring wells.

After all of the assessment wells have been installed and quarterly samples have been collected for 1 year a Groundwater Quality Assessment Report will be prepared (GWQAR). The GWQAR will contain the data collected during the 1 year of assessment monitoring. The data analysis methods presented in the Groundwater Characterization section will be used to study the data and determine if there has been any impact on the groundwater due to vertical migration.

Analytical Requirements

All of the wells in the SRL Basin groundwater detection monitoring system (existing and new) will be sampled quarterly. Samples will be collected and shipped according to approved DPSOP 254 Procedures. Groundwater samples will be analyzed for the constituents listed as SCHMWR R.61-79.265.29 Required Parameters (Table 1) by the primary laboratory that is performing all of the other analysis of A/M Area groundwater samples. Results of the quarterly detection monitoring are routinely published in the Annual SRS Environmental Report. Additional groundwater monitoring data from the SRL Basin monitoring network will continue to be reported in the Annual SRS Environmental Report.

Hazardous Constituents

A full Appendix IX scan has not been performed on any of the SRL Basin water table monitoring wells. In order to determine if any hazardous constituents, besides those that have already been analyzed for routinely, have entered the groundwater beneath the SRL Basin an Appendix IX analysis will be performed on samples collected from the SRL Basin groundwater detection well network. After the results from the Appendix IX analysis have been received the data will be analyzed and acted upon according to the decision tree in Figure 9.

CORRECTIVE ACTION FEASIBILITY PLAN

VOC contamination in the vicinity of the SRL Basins is currently being remediated under the auspices of the SRS Hazardous Waste Permit Application (Volume III, Section J) which requires that all VOC contamination in the A/M Area will be assessed and remediated under that permit. Section J.6.3 of Volume III of the SRS Hazardous Waste Permit Application (Appendix C) is currently under review and has not yet been approved by SCDHEC.

Because the inorganic constituents that are statistically elevated are present in concentrations that do not exceed PDWS, remediation of inorganic constituents is not necessary at this time. If future monitoring results indicate that remediation of constituents not covered in the existing A/M Area Corrective Action Plan is necessary a revised Corrective Action Feasibility Plan will be prepared and submitted to address these constituents.

SCHEDULE

The schedule for implementation of the proposed activities is presented in Figure 10. The time required for each activity in the schedule is an estimate and may vary depending on the availability of procured drilling services and technical oversight. A completion date has not been estimated because the time necessary for required regulatory review/ approval is not known.

REFERENCES

Bransford, J. L. , H. W. Bledsoe, and R. V. Simmons, 1988. **Technical Data Summary: Chemical Characterization of the Sediments and Groundwater at the SRL Seepage Basins**, DPSTD-84-110, E. I. du Pont de Nemours and Company, Savannah River Laboratory, Aiken, SC.

Haselow, J. S., B. B. Looney and R. L. Nichols, 1989. **WASTE SITE ASSESSMENT REPORT Savannah River Laboratory Seepage Basins**, WSRC-RP-89-822, Westinghouse Savannah River Company, Aiken, SC.

South Carolina Department of Health and Environmental Control, 1988, **South Carolina Hazardous Waste Management Regulations**, Columbia, SC.

United States District Court District of South Carolina Aiken Division, 1988, **Civil Action No. 1:85-2583-6.**

Table 1: List of parameters analyzed for in Groundwater Detection Monitoring at the SRL Basins.

SCHWMR R.61-79.265.92 Required Parameters	Additional Parameters
ARSENIC	1,1,1-TRICHLOROETHANE
CADMIUM	1,1,2,2-TETRACHLOROETHANE
CHROMIUM	1,1,2-TRICHLOROETHANE
ENDRIN	1,1-DICHLOROETHANE
LINDANE	1,1-DICHLOROETHYLENE
METHOXYCHLOR	1,2-DICHLOROETHANE
PHENOLS	1,2-DICHLOROPROPANE
SELENIUM	2-CHLOROETHYLVINYL ETHER
SILVEX	BENZENE
TOXAPHENE	BERYLLIUM
MERCURY	BROMODICHLOROMETHANE
LEAD	BROMOFORM
GROSS ALPHA	BROMOMETHANE
SILVER	CARBON TETRACHLORIDE
SULFATE	CHLOROBENZENE
TOTAL RADIUM	CHLOROETHANE
FLUORIDE	CHLOROETHENE
MANGANESE	CHLOROFORM
BARIUM	CHLOROMETHANE
CHLORIDE	CIS-1,3-DICHLOROPROPENE
TOTAL ORGANIC HALOGENS	CYANIDE
TOTAL ORGANIC CARBON	DIBROMOCHLOROMETHANE
2,4-DICHLOROPHENOXYACETIC ACID	DISSOLVED ORGANIC CARBON
NITRATE AS NITROGEN	ETHYLBENZENE
PH	GC SCAN
SODIUM	METHYLENE CHLORIDE
SPECIFIC CONDUCTANCE	NITRITE AS NITROGEN
NONVOLATILE BETA (GROSS BETA)	SULFIDE
IRON	SURFACTANTS
	TETRACHLOROETHYLENE
	TOLUENE
	TRANS-1,2-DICHLOROETHENE
	TRANS-1,3-DICHLOROPROPENE
	TRICHLOROETHYLENE
	TRICHLOROFLUOROMETHANE
	NICKEL
	COPPER
	TOTAL PHOSPHATES
	CALCIUM
	COLOR
	CORROSIVITY
	MAGNESIUM
	ODOR
	POTASSIUM
	SILICA
	TOTAL DISSOLVED SOLIDS
	TRITIUM
	TURBIDITY
	ZINC

Table 2: List of constituents analyzed for and never detected.

SCHWMR R.61-79.265.92 Required Parameters	Additional Parameters
ARSENIC	1,1,1-TRICHLOROETHANE
ENDRIN	1,1,2,2-TETRACHLOROETHANE
LINDANE	1,1,2-TRICHLOROETHANE
METHOXYCHLOR	1,1-DICHLOROETHANE
SELENIUM	1,1-DICHLOROETHYLENE
SILVEX	1,2-DICHLOROETHANE
TOXAPHENE	1,2-DICHLOROPROPANE
2,4-DICHLOROPHENOXYACETIC ACID	2-CHLOROETHYLVINYL ETHER
	BENZENE
	BERYLLIUM
	BROMODICHLOROMETHANE
	BROMOFORM
	BROMOMETHANE
	CARBON TETRACHLORIDE
	CHLOROBENZENE
	CHLOROETHANE
	CHLOROETHENE
	CHLOROFORM
	CHLOROMETHANE
	CIS-1,3-DICHLOROPROPENE
	CYANIDE
	DIBROMOCHLOROMETHANE
	DISSOLVED ORGANIC CARBON
	ETHYLBENZENE
	NITRITE AS NITROGEN
	SULFIDE
	TOLUENE
	TRANS-1,3-DICHLOROPROPENE
	TRICHLOROFLUOROMETHANE

Table 3: List of constituents detected and not present in concentrations significantly different from background.

SCHWMR R.61-79.265.92 Required Parameters	Additional Parameters
CADMIUM	GC SCAN
PHENOLS	METHYLENE CHLORIDE
MERCURY	SURFACTANTS
LEAD	NICKEL
GROSS ALPHA	COPPER
SULFATE	TOTAL PHOSPHATES
TOTAL RADIUM	COLOR
FLUORIDE	CORROSIVITY
TOTAL ORGANIC CARBON	MAGNESIUM
NITRATE AS NITROGEN	ODOR
SODIUM	POTASSIUM
NONVOLATILE BETA (GROSS BETA)	TOTAL DISSOLVED SOLIDS
	TRITIUM
	TURBIDITY
	ZINC

Table 4: Summary of constituents/ indicators detected in the groundwater in concentrations significantly above background in the SRL Basin Groundwater Detection Monitoring Network.

pH
Specific Conductance
Barium
Manganese
Sodium
Iron
Zinc
Calcium

Summary of constituents/ indicators detected elevated in concentrations.

Total Organic Halogens
Trichloroethylene
Tetrachloroethylene

Figure 1: Location of the SRL Basins in the A/M Area.

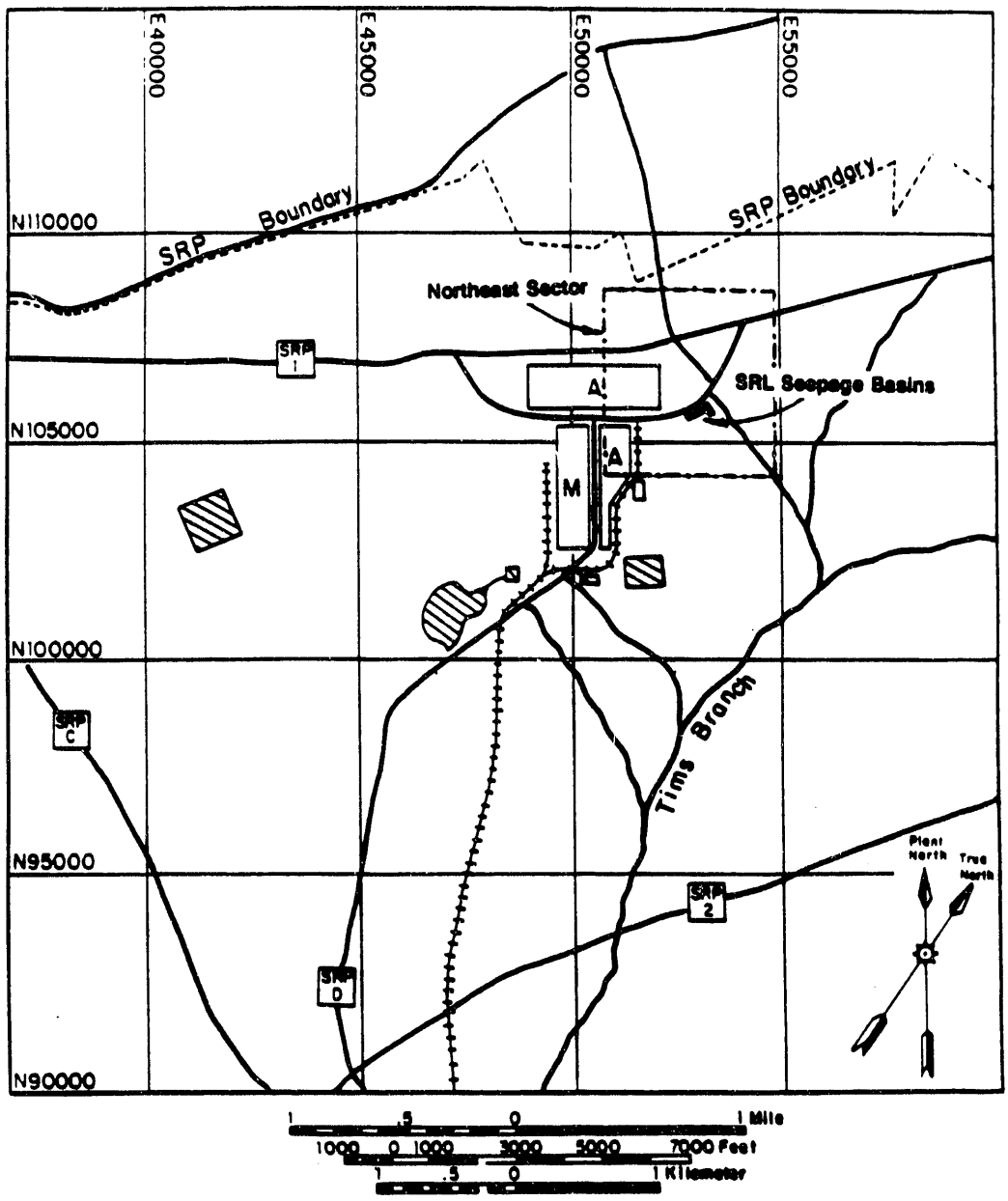

Figure 2: Hydrogeologic section in the vicinity of the SRL Basins.

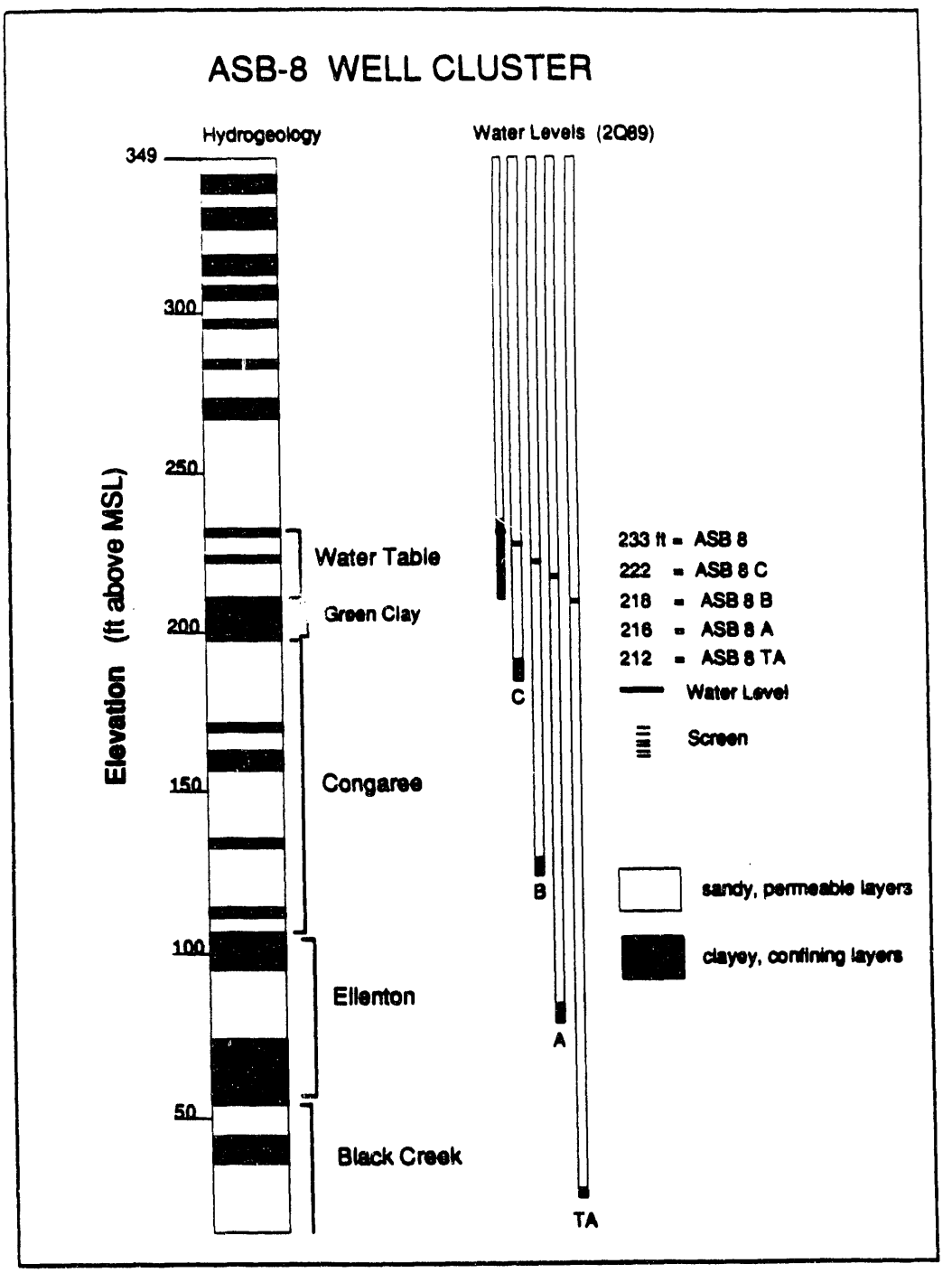

Figure 3: Potentiometric map of the Water Table in the vicinity of the SRL Basins.

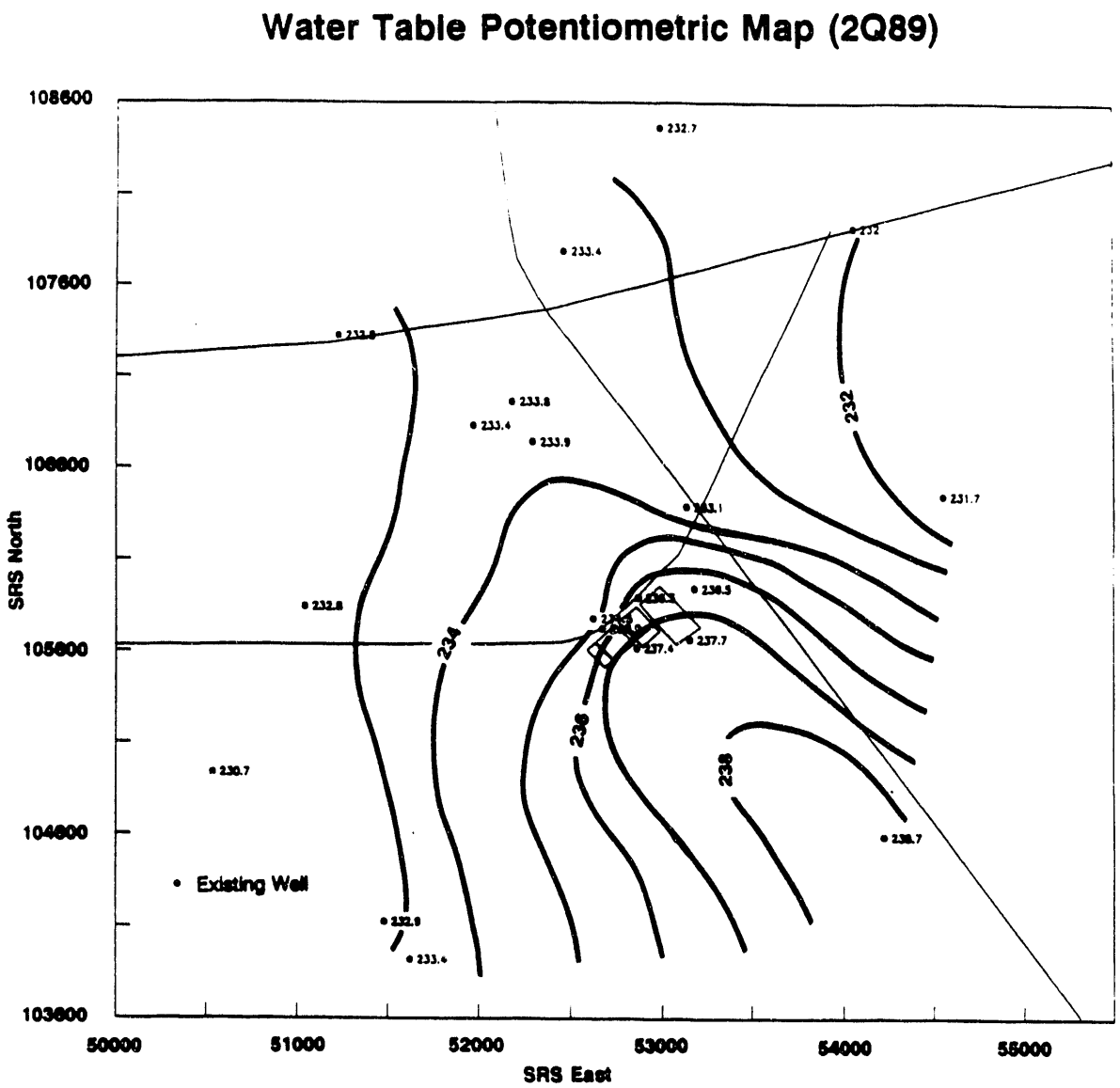

Figure 4: Location of groundwater detection monitoring wells at the SRL Basins.

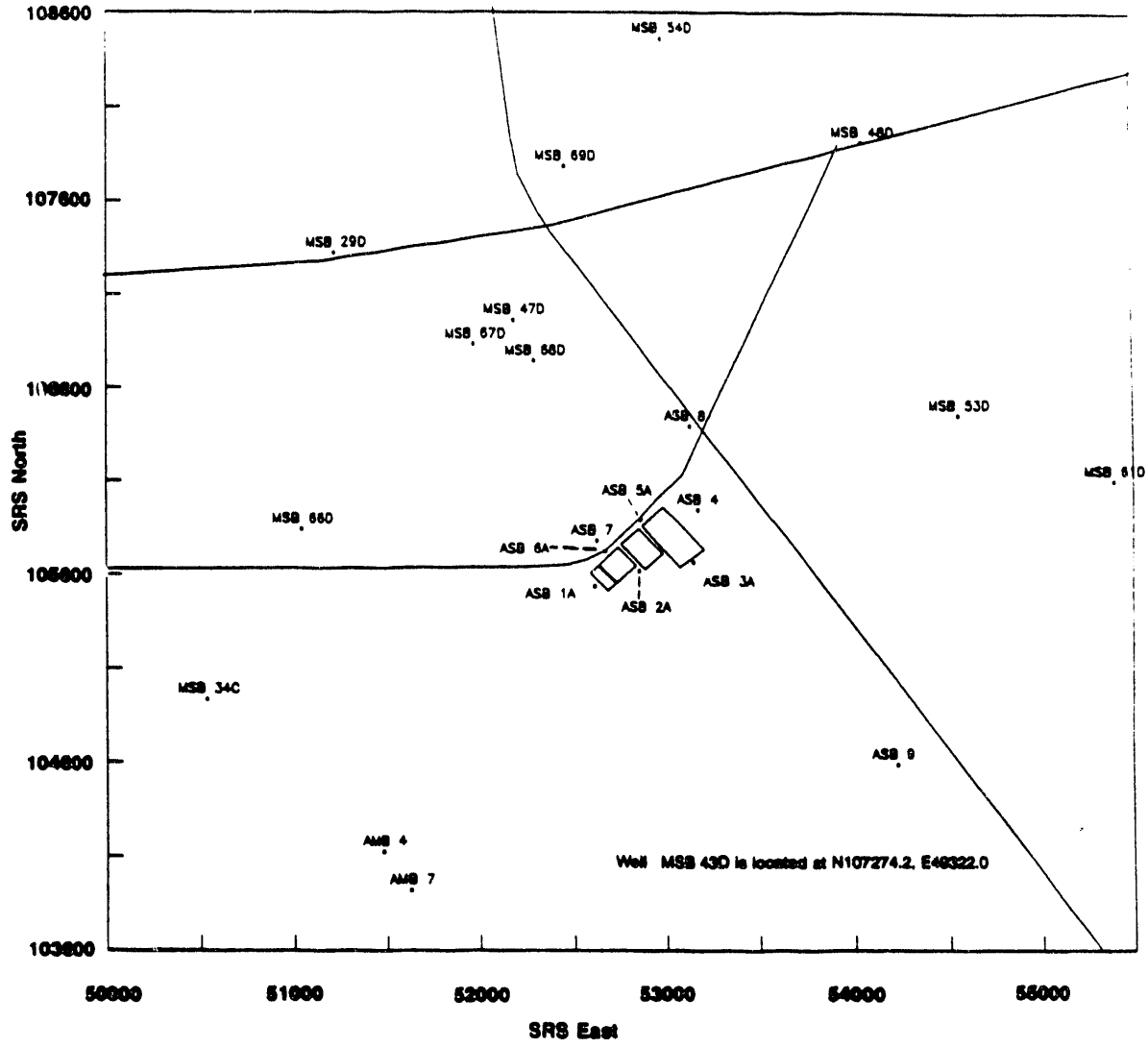

Figure 5: Specific Conductance verses Time at the SRL Basin detection monitoring wells.

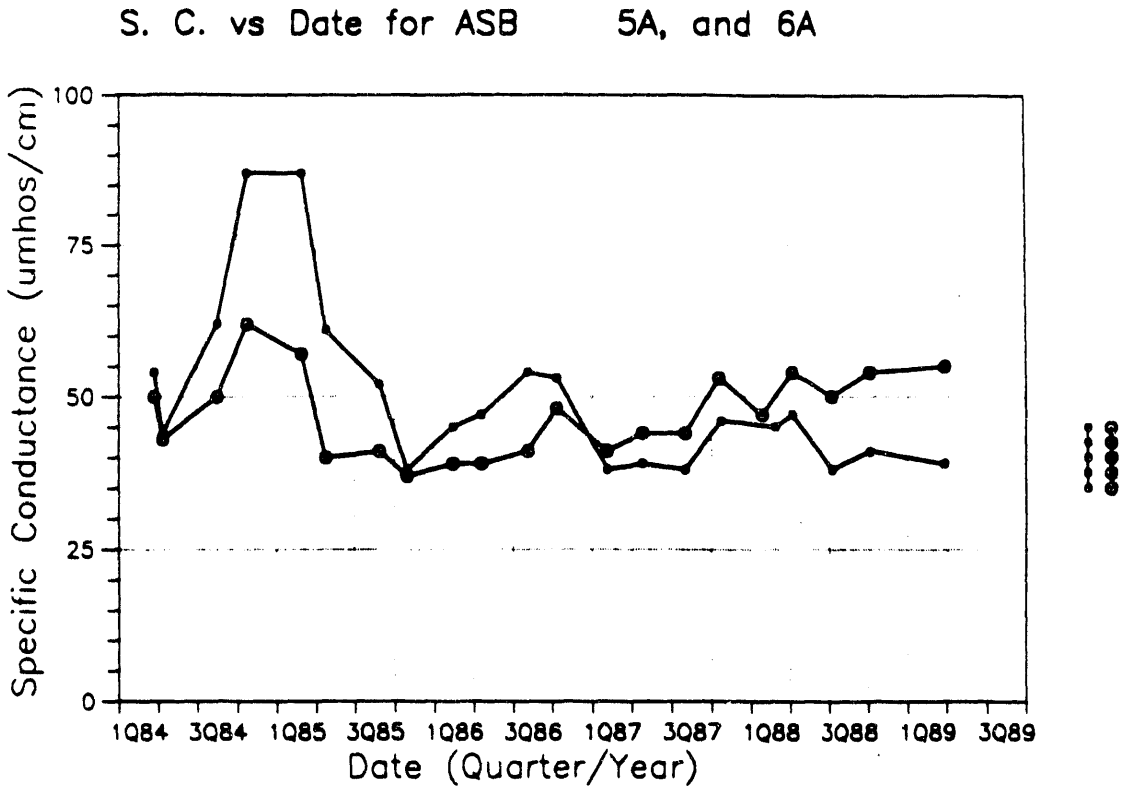

Figure 6: Sodium Ion Concentration verses Time at the SRL Basin detection monitoring wells.

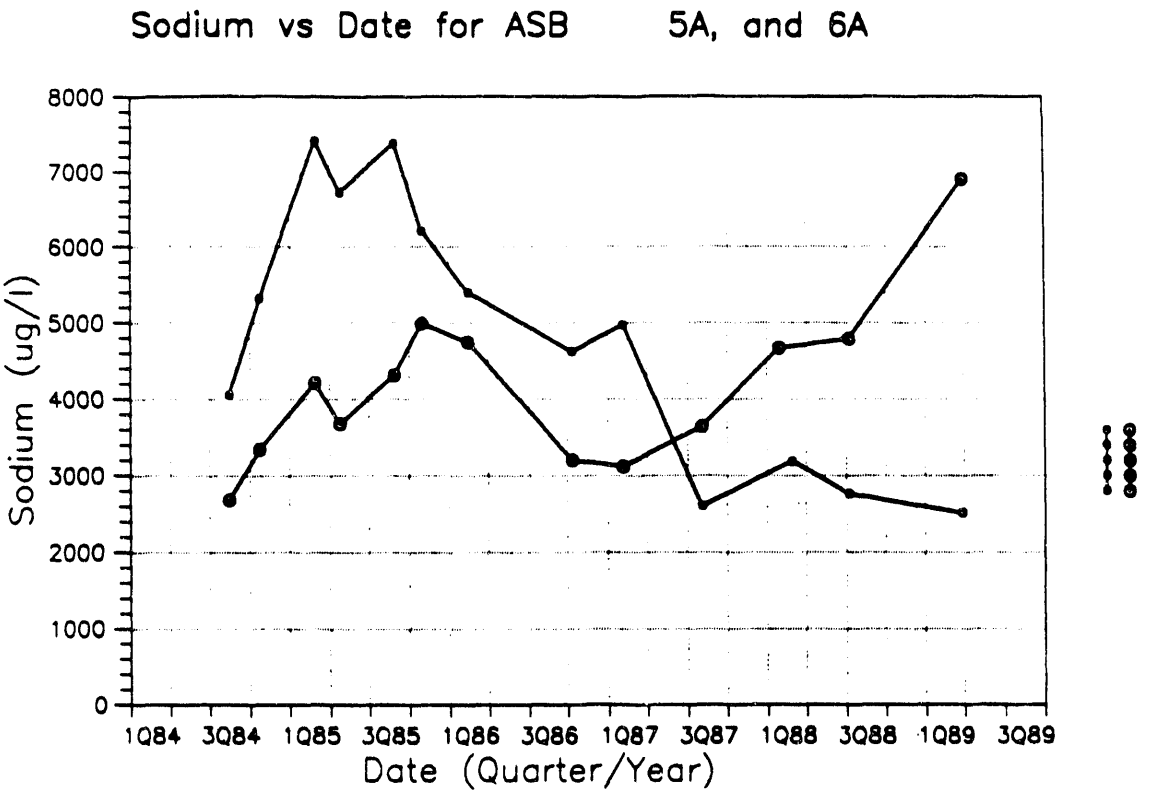

Figure 7: Chloride Ion Concentration verses Time at the SRL Basin detection monitoring wells.

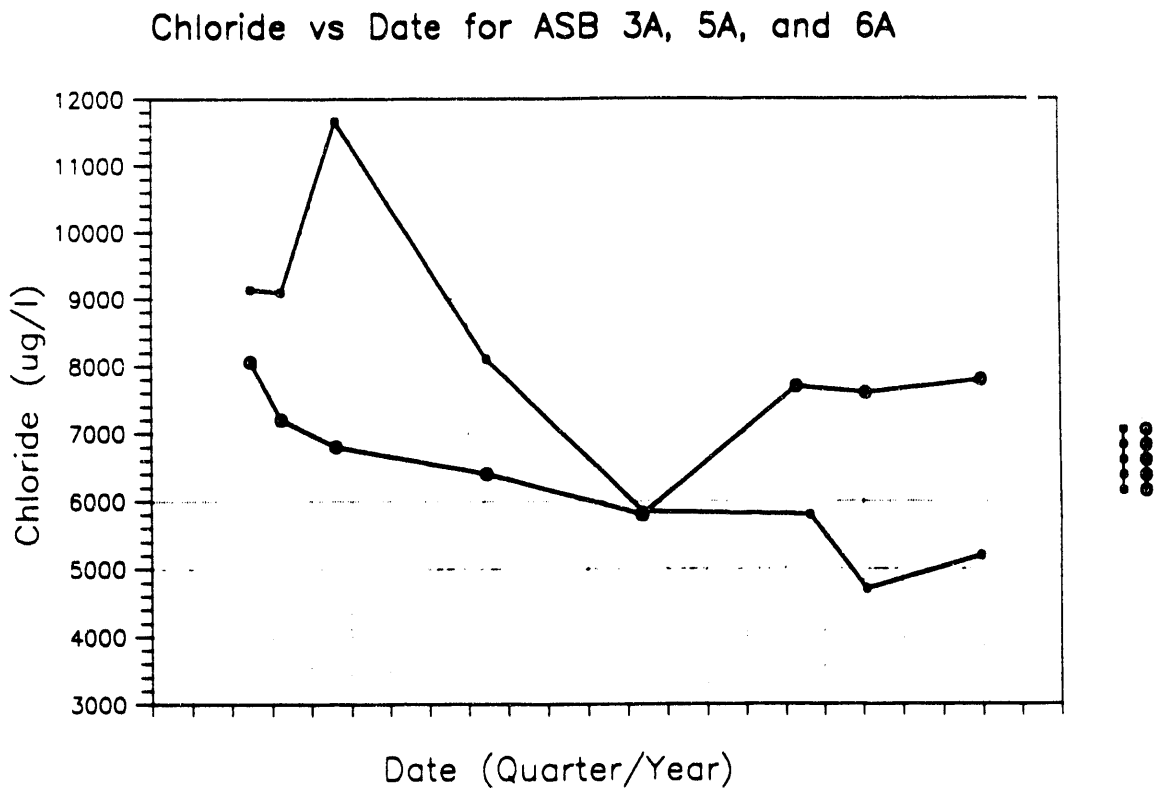

Figure 8: Potentiometric map for the upper portion of the Congaree Aquifer.

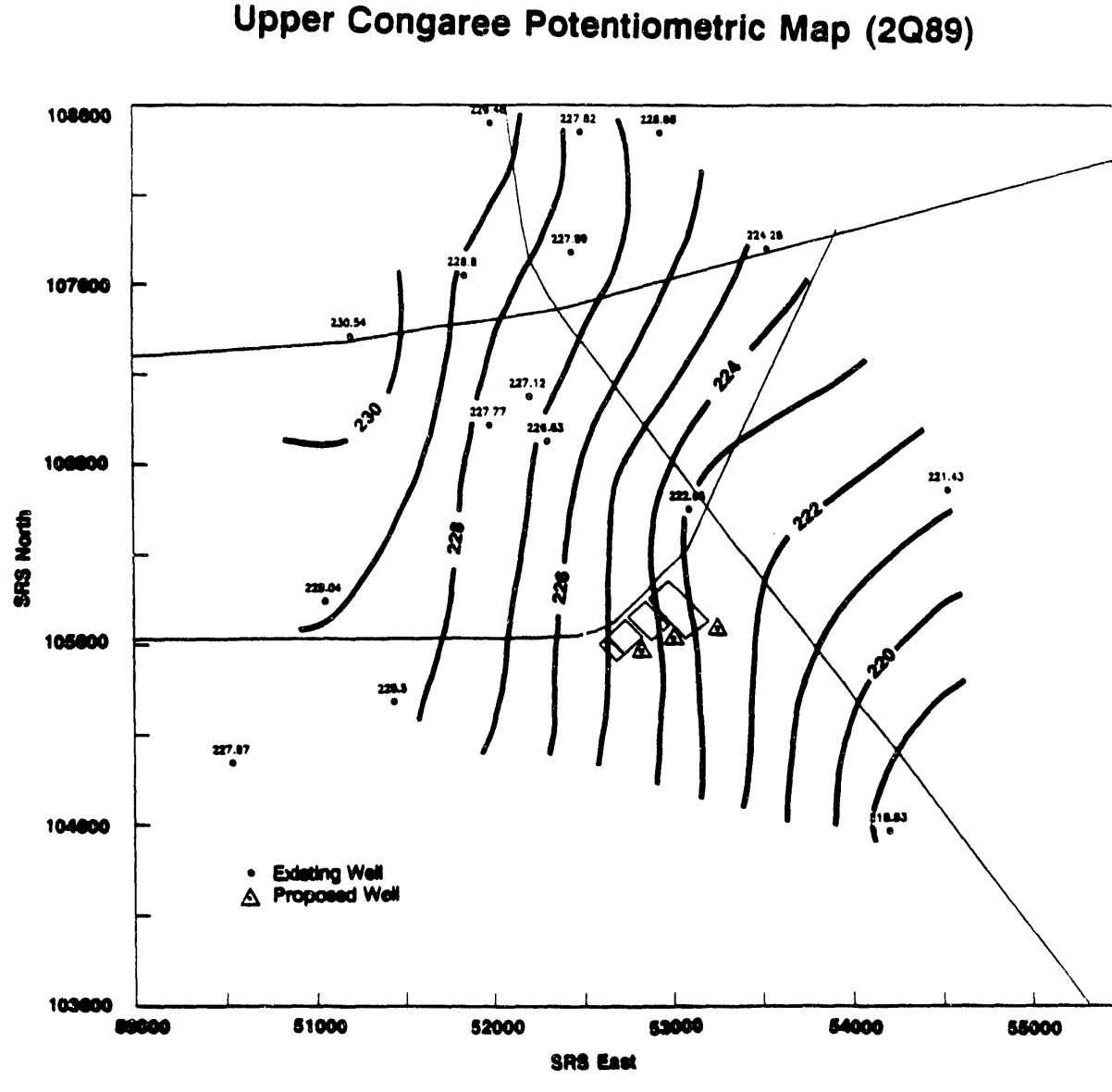

Figure 11 identifies the wells used to prepare this map.

Figure 9: Decision tree for reporting results of Appendix IX analyses.

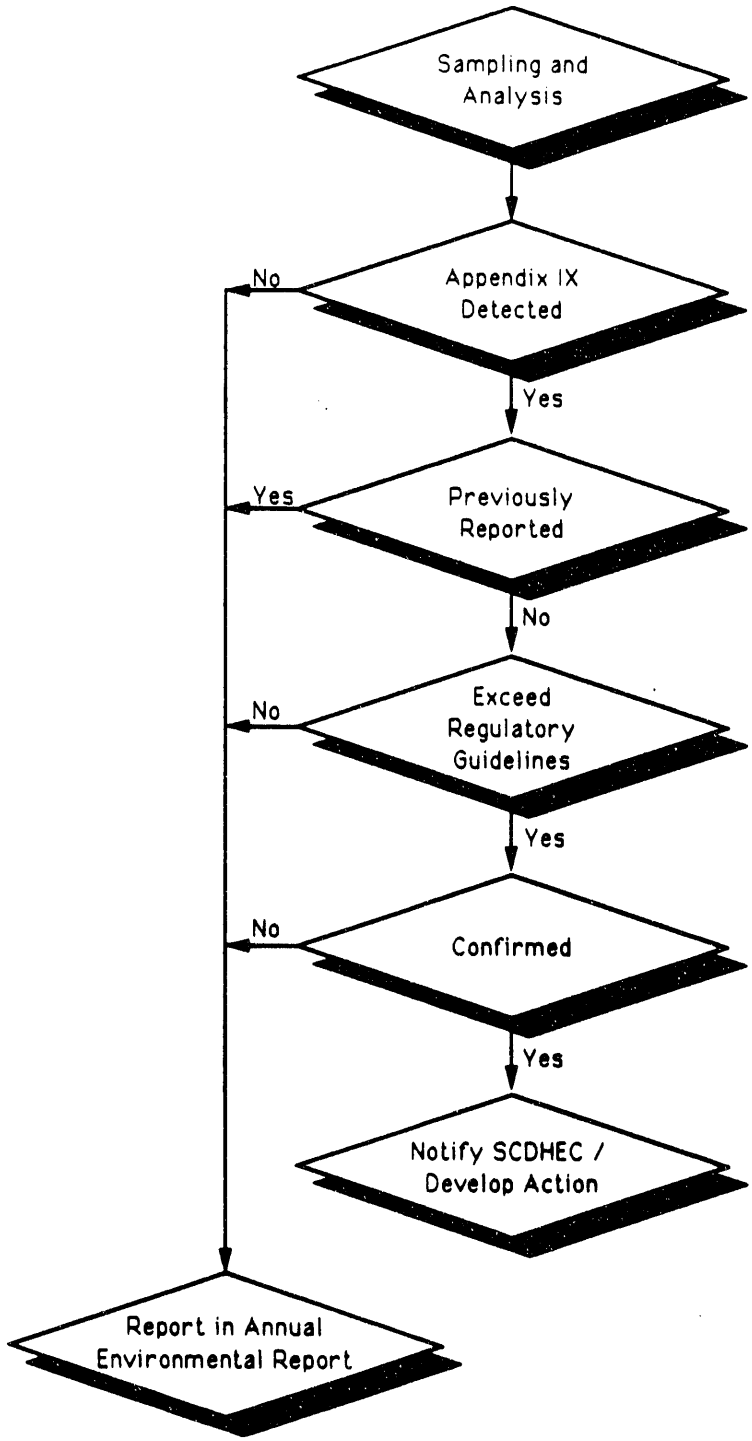

Figure 10: Timetable for performing assessment of vertical migration.

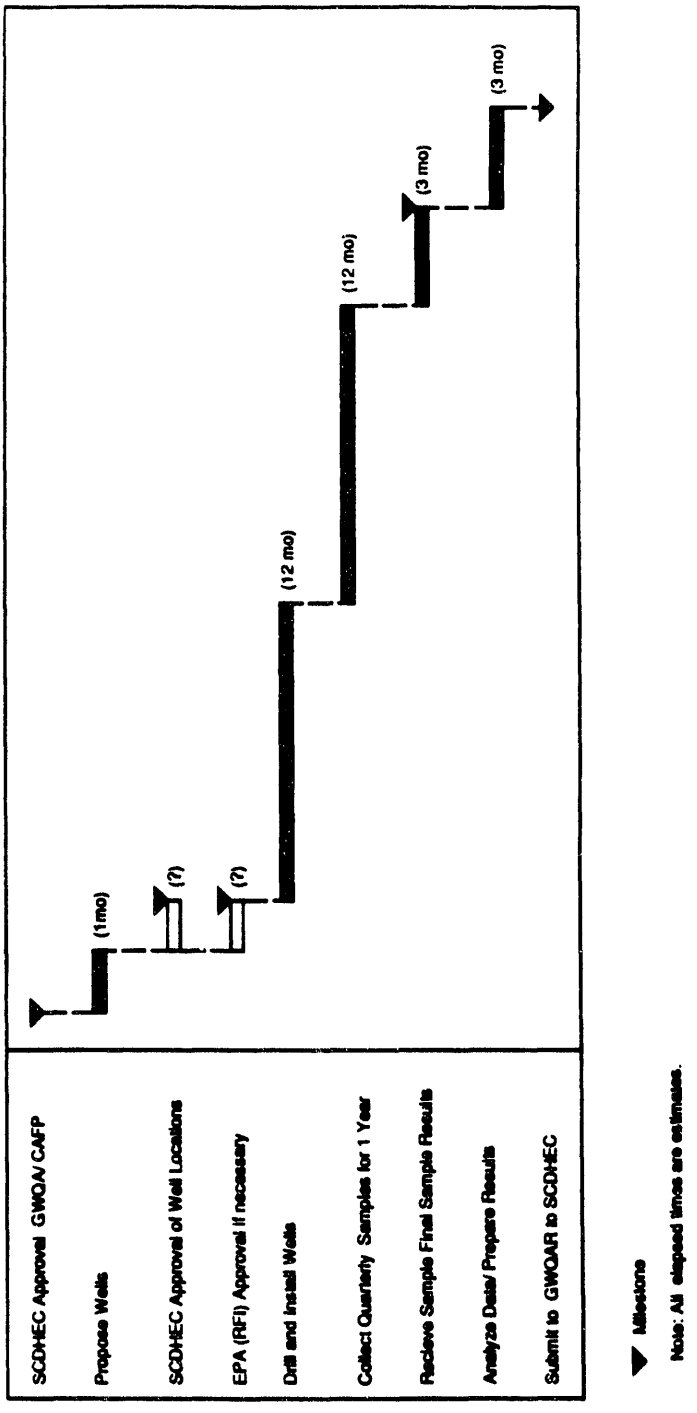

Figure 11: Identification of wells used to prepare the Upper Congaree Potentiometric Map.

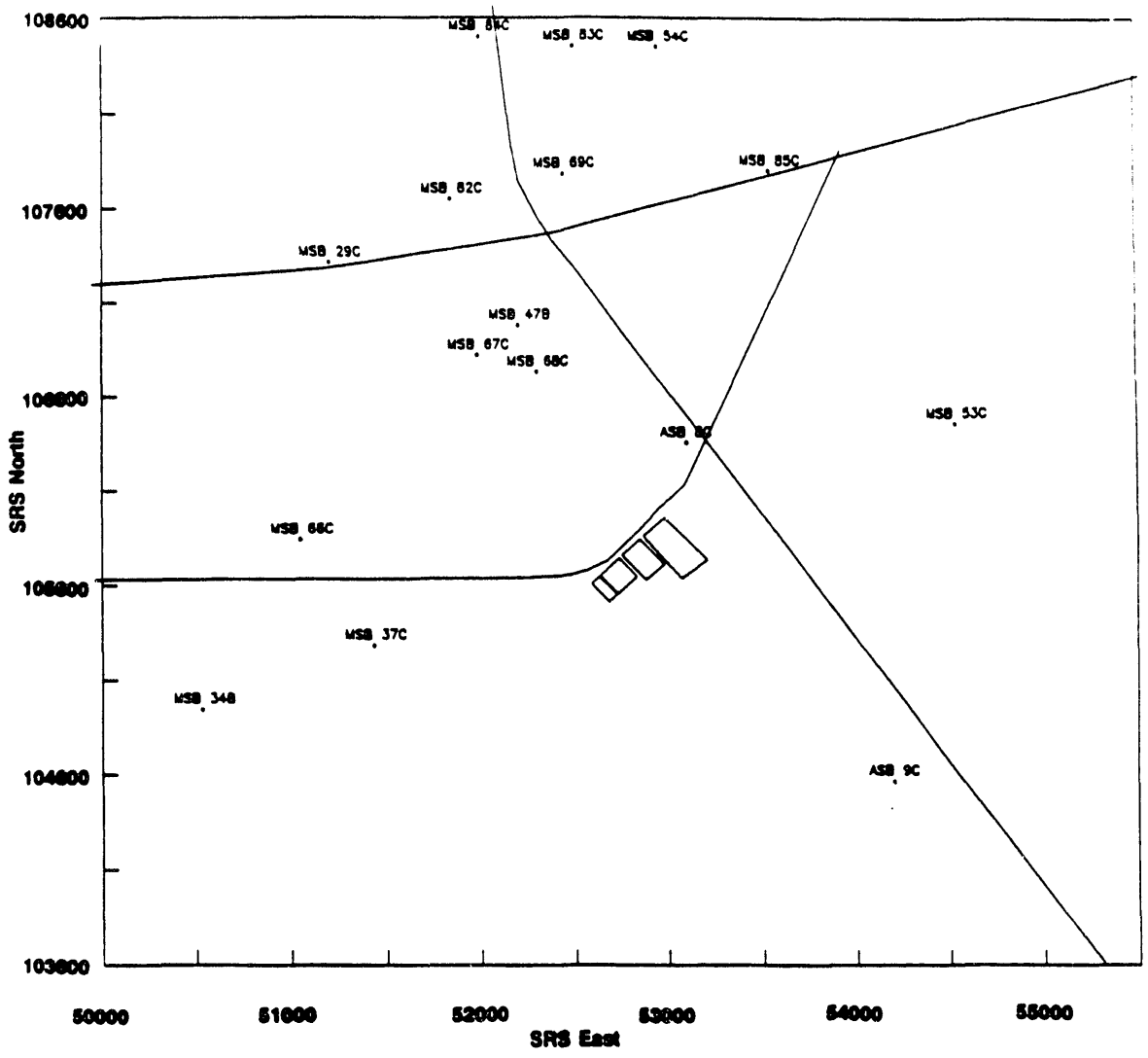

This Page Intentionally Left Blank.

APPENDIX A

GROUNDWATER MONITORING DATA AND RESULTS OF STATISTICAL COMPARISONS

This Page Intentionally Left Blank.

GROUNDWATER MONITORING DATA AND RESULTS OF STATISTICAL COMPARISONS

The following tables document the analytical data from wells ASB 1A, ASB 2A, ASB 3A, ASB 4, ASB 5A, and ASB 6A that were used to assess the quality of groundwater underlying the SRL Seepage Basins. For each well, the following data tables are presented in turn:

Table Type	Information	Data Fields
Raw Data -	all available analytical data from the well.	well - ASB XX date - MMDDYY test name measurement units laboratory code[1]
T Test Data -	the data used for statistical testing after all of the pretest criteria were used (e.g., the data in this table had more than 50 % of the samples greater than detection, were from the reference laboratory, had more than four sample dates, etc.). Each of these tables included the relavent background data.	observation # well - ASBXX date - MMDDYY test name value used in T Test
Statistical Results -	output tables for the T Tests.	output from SAS PROC TTEST

The last section in this appendix presents the raw data for the background wells.

---

[1] Laboratory Codes -

EE = Envirodyne Engineers
EW = Enwright Laboratories
FD = Field Data
CP = Controls for Environmental Pollution
MM = subcontractor to Environmental & Chemical Services
RM = Radiation Measurements / Envirodyne Engineers
MA = M-Area Analytical Laboratories at SRS
SR = SRS Environmental Monitoring Laboratories
TE = Teledyne Isotopes
WA = Westin Analytics

This Page Intentionally Left Blank.

Groundwater Monitoring Well

ASB 1A

This Page Intentionally Left Blank.

Raw Data

This Page Intentionally Left Blank.

Raw Data for ASB 1A

ASB	1A	032384	SPECIFIC CONDUCTANCE		47.0000	UMHC	FD
ASB	1A	032384	PH		5.5000	PH	FD
ASB	1A	041184	SPECIFIC CONDUCTANCE		39.0000	UMHC	FD
ASB	1A	041184	PH		5.5000	PH	FD
ASB	1A	081584	SILVER	LT	2.0000	UGL	EE
ASB	1A	081584	GROSS ALPHA	LT	2.0000	PCL	CP
ASB	1A	081584	ARSENIC	LT	1.0000	UGL	EE
ASB	1A	081584	BARIUM		8.0000	UGL	EE
ASB	1A	081584	BERYLLIUM	LT	2.0000	UGL	EE
ASB	1A	081584	NONVOLATILE BETA	LT	3.0000	PCL	CP
ASB	1A	081584	CADMIUM	LT	2.0000	UGL	EE
ASB	1A	081584	CHLORIDE		6450.0000	UGL	EE
ASB	1A	081584	COLOR		0.0000	APC	EE
ASB	1A	081584	SPECIFIC CONDUCTANCE		43.0000	UMHC	FD
ASB	1A	081584	CHROMIUM	LT	4.0000	UGL	EE
ASB	1A	081584	COPPER	LT	4.0000	UGL	EE
ASB	1A	081584	CYANIDE	LT	5.0000	UGL	EE
ASB	1A	081584	DISSOLVED ORGANIC CARBON	LT	5000.0000	UGL	EE
ASB	1A	081584	FLUORIDE		120.0000	UGL	EE
ASB	1A	081584	IRON		32.0000	UGL	EE
ASB	1A	081584	GC SCAN	LT	40.0000	UGL	EE
ASB	1A	081584	MERCURY	LT	0.2000	UGL	EE
ASB	1A	081584	MERCURY	LT	0.2000	UGL	EE
ASB	1A	081584	MANGANESE		120.0000	UGL	EE
ASB	1A	081584	SODIUM		2180.0000	UGL	EE
ASB	1A	081584	NICKEL	LT	4.0000	UGL	EE
ASB	1A	081584	NITRITE AS NITROGEN	LT	500.0000	UGL	EE
ASB	1A	081584	NITRATE AS NITROGEN	LT	500.0000	UGL	EE
ASB	1A	081584	ODOR		0.0000	THON	EE
ASB	1A	081584	LEAD		35.0000	UGL	EE
ASB	1A	081584	PH		4.3000	PH	FD
ASB	1A	081584	PHENOLS		11.0000	UGL	EE
ASB	1A	081584	SELENIUM	LT	1.0000	UGL	EE
ASB	1A	081584	SILVEX	LT	2.0000	UGL	EE
ASB	1A	081584	SULFATE	LT	10000.0000	UGL	EE
ASB	1A	081584	SULFIDE	LT	1000.0000	UGL	EE
ASB	1A	081584	SURFACTANTS	LT	10.0000	UGL	EE
ASB	1A	081584	TOTAL DISSOLVED SOLIDS		20000.0000	UGL	EE
ASB	1A	081584	TOTAL ORGANIC CARBON	LT	5000.0000	UGL	EE
ASB	1A	081584	TOTAL RADIUM		4.0000	PCL	CP
ASB	1A	081584	TOTAL ORGANIC HALOGENS		8.0000	UGL	MM
ASB	1A	081584	TURBIDITY	LT	1.0000	TU	EE
ASB	1A	081584	2,4-DICHLOROPHENOXYACETIC ACID	LT	20.0000	UGL	EE
ASB	1A	081584	ZINC		55.0000	UGL	EE
ASB	1A	112884	SILVER	LT	2.0000	UGL	EE
ASB	1A	112884	GROSS ALPHA		10.0000	PCL	CP
ASB	1A	112884	ARSENIC	LT	1.0000	UGL	EE
ASB	1A	112884	BARIUM		8.0000	UGL	EE
ASB	1A	112884	BERYLLIUM	LT	2.0000	UGL	EE
ASB	1A	112884	NONVOLATILE BETA		7.0000	PCL	CP
ASB	1A	112884	CADMIUM	LT	2.0000	UGL	EE
ASB	1A	112884	CHLORIDE		5600.0000	UGL	EE
ASB	1A	112884	CHLORIDE		4800.0000	UGL	EE
ASB	1A	112884	COLOR		0.0000	APC	EE
ASB	1A	112884	SPECIFIC CONDUCTANCE		54.0000	UMHC	FD
ASB	1A	112884	CORROSIVITY		0.0023	MMY	EE
ASB	1A	112884	CHROMIUM	LT	4.0000	UGL	EE
ASB	1A	112884	COPPER	LT	4.0000	UGL	EE
ASB	1A	112884	CYANIDE	LT	5.0000	UGL	EE
ASB	1A	112884	DISSOLVED ORGANIC CARBON	LT	5000.0000	UGL	EE
ASB	1A	112884	ENDRIN	LT	0.0400	UGL	EE
ASB	1A	112884	FLUORIDE	LT	100.0000	UGL	EE
ASB	1A	112884	IRON		5.0000	UGL	EE
ASB	1A	112884	GC SCAN	LT	40.0000	UGL	EE

Raw Data for ASB 1A

ASB	1A	112884	MERCURY	LT	0.2000	UGL	EE
ASB	1A	112884	LINDANE	LT	1.0000	UGL	EE
ASB	1A	112884	METHOXYCHLOR	LT	20.0000	UGL	EE
ASB	1A	112884	MANGANESE		98.0000	UGL	EE
ASB	1A	112884	SODIUM		2020.0000	UGL	EE
ASB	1A	112884	NICKEL	LT	4.0000	UGL	EE
ASB	1A	112884	NITRITE AS NITROGEN	LT	500.0000	UGL	EE
ASB	1A	112884	NITRATE AS NITROGEN	LT	500.0000	UGL	EE
ASB	1A	112884	ODOR		0.0000	THON	EE
ASB	1A	112884	LEAD	LT	4.0000	UGL	EE
ASB	1A	112884	PH		4.5000	PH	FD
ASB	1A	112884	PHENOLS	LT	2.0000	UGL	EE
ASB	1A	112884	SELENIUM	LT	1.0000	UGL	EE
ASB	1A	112884	SILVEX	LT	2.0000	UGL	EE
ASB	1A	112884	SULFATE	LT	5000.0000	UGL	EE
ASB	1A	112884	SULFIDE	LT	1000.0000	UGL	EE
ASB	1A	112884	SURFACTANTS	LT	10.0000	UGL	EE
ASB	1A	112884	TOTAL DISSOLVED SOLIDS		40000.0000	UGL	EE
ASB	1A	112884	TOTAL ORGANIC CARBON	LT	5000.0000	UGL	EE
ASB	1A	112884	TOTAL RADIUM		2.0000	PCL	CP
ASB	1A	112884	TOTAL ORGANIC HALOGENS		7.0000	UGL	MM
ASB	1A	112884	TURBIDITY		6.5000	TU	EE
ASB	1A	112884	TOXAPHENE	LT	1.0000	UGL	EE
ASB	1A	112884	2,4-DICHLOROPHENOXYACETIC ACID	LT	20.0000	UGL	EE
ASB	1A	112884	ZINC		11.0000	UGL	EE
ASB	1A	022585	SILVER	LT	2.0000	UGL	EE
ASB	1A	022585	GROSS ALPHA		8.0000	PCL	CP
ASB	1A	022585	ARSENIC	LT	1.0000	UGL	EE
ASB	1A	022585	BARIUM		12.0000	UGL	EE
ASB	1A	022585	NONVOLATILE BETA		5.0000	PCL	CP
ASB	1A	022585	CADMIUM	LT	2.0000	UGL	EE
ASB	1A	022585	CHLORIDE		7770.0000	UGL	EE
ASB	1A	022585	SPECIFIC CONDUCTANCE		75.0000	UMHC	FD
ASB	1A	022585	CHROMIUM	LT	4.0000	UGL	EE
ASB	1A	022585	ENDRIN	LT	0.0400	UGL	EE
ASB	1A	022585	FLUORIDE	LT	100.0000	UGL	EE
ASB	1A	022585	IRON	LT	4.0000	UGL	EE
ASB	1A	022585	MERCURY		0.2000	UGL	EE
ASB	1A	022585	LINDANE	LT	1.0000	UGL	EE
ASB	1A	022585	METHOXYCHLOR	LT	20.0000	UGL	EE
ASB	1A	022585	MANGANESE		20.0000	UGL	EE
ASB	1A	022585	SODIUM		2250.0000	UGL	EE
ASB	1A	022585	NITRATE AS NITROGEN	LT	500.0000	UGL	EE
ASB	1A	022585	LEAD	LT	4.0000	UGL	EE
ASB	1A	022585	PH		5.5000	PH	FD
ASB	1A	022585	PHENOLS	LT	2.0000	UGL	EE
ASB	1A	022585	PHENOLS	LT	2.0000	UGL	EE
ASB	1A	022585	SELENIUM	LT	1.0000	UGL	EE
ASB	1A	022585	SILVEX	LT	2.0000	UGL	EE
ASB	1A	022585	SULFATE	LT	5000.0000	UGL	EE
ASB	1A	022585	TOTAL ORGANIC CARBON		415.0000	UGL	EE
ASB	1A	022585	TOTAL RADIUM		2.0000	PCL	CP
ASB	1A	022585	TOTAL ORGANIC HALOGENS	LT	5.0000	UGL	EE
ASB	1A	022585	TURBIDITY		1.6000	TU	EE
ASB	1A	022585	TOXAPHENE	LT	1.0000	UGL	EE
ASB	1A	022585	2,4-DICHLOROPHENOXYACETIC ACID	LT	20.0000	UGL	EE
ASB	1A	042385	SPECIFIC CONDUCTANCE		47.0000	UMHC	FD
ASB	1A	042385	CHROMIUM	LT	4.0000	UGL	EE
ASB	1A	042385	MERCURY	LT	0.2000	UGL	EE
ASB	1A	042385	SODIUM		2050.0000	UGL	EE
ASB	1A	042385	LEAD		8.0000	UGL	EE
ASB	1A	042385	PH		5.0000	PH	FD
ASB	1A	042385	TOTAL ORGANIC CARBON		688.0000	UGL	EE
ASB	1A	042385	TOTAL ORGANIC HALOGENS		7.9000	UGL	EE

Raw Data for ASB 1A

ASB	1A	081385	SPECIFIC CONDUCTANCE		43.0000	UMHC	FD
ASB	1A	081385	CHROMIUM	LT	4.0000	UGL	EE
ASB	1A	081385	MERCURY	LT	0.2000	UGL	EE
ASB	1A	081385	SODIUM		3710.0000	UGL	EE
ASB	1A	081385	LEAD	LT	10.0000	UGL	EE
ASB	1A	081385	PH		5.0000	PH	FD
ASB	1A	081385	TOTAL ORGANIC CARBON		350.0000	UGL	EE
ASB	1A	081385	TOTAL ORGANIC HALOGENS		13.0000	UGL	EE
ASB	1A	102985	SPECIFIC CONDUCTANCE		35.0000	UMHC	FD
ASB	1A	102985	CHROMIUM	LT	4.0000	UGL	EE
ASB	1A	102985	MERCURY	LT	0.2000	UGL	EE
ASB	1A	102985	SODIUM		2290.0000	UGL	EE
ASB	1A	102985	LEAD	LT	5.0000	UGL	EE
ASB	1A	102985	PH		4.6000	PH	FD
ASB	1A	102985	TOTAL ORGANIC CARBON		1390.0000	UGL	EE
ASB	1A	102985	TOTAL ORGANIC HALOGENS		11.0000	UGL	EE
ASB	1A	021286	GROSS ALPHA		8.0000	PCL	CP
ASB	1A	021286	NONVOLATILE BETA		4.0000	PCL	CP
ASB	1A	021286	CHLORIDE		6900.0000	UGL	EE
ASB	1A	021286	SPECIFIC CONDUCTANCE		41.0000	UMHC	FD
ASB	1A	021286	IRON		7.0000	UGL	EE
ASB	1A	021286	MERCURY	LT	0.2000	UGL	EE
ASB	1A	021286	MANGANESE		34.0000	UGL	EE
ASB	1A	021286	SODIUM		2100.0000	UGL	EE
ASB	1A	021286	PH		4.4000	PH	FD
ASB	1A	021286	PHENOLS	LT	2.0000	UGL	EE
ASB	1A	021286	PHENOLS	LT	2.0000	UGL	EE
ASB	1A	021286	SULFATE	LT	5000.0000	UGL	EE
ASB	1A	021286	SULFATE	LT	5000.0000	UGL	EE
ASB	1A	021286	TOTAL ORGANIC CARBON	LT	1000.0000	UGL	EE
ASB	1A	021286	TOTAL RADIUM		4.0000	PCL	CP
ASB	1A	021286	TOTAL ORGANIC HALOGENS		6.0000	UGL	EE
ASB	1A	041886	SPECIFIC CONDUCTANCE		42.0000	UMHC	FD
ASB	1A	041886	CHROMIUM	LT	4.0000	UGL	EE
ASB	1A	041886	NICKEL	LT	4.0000	UGL	EE
ASB	1A	041886	LEAD		5.0000	UGL	EE
ASB	1A	041886	PH		4.9000	PH	FD
ASB	1A	041886	ZINC	LT	2.0000	UGL	EE
ASB	1A	080586	GROSS ALPHA	LT	3.0000	PCL	RM
ASB	1A	080586	SPECIFIC CONDUCTANCE		37.0000	UMHC	FD
ASB	1A	080586	CHROMIUM	LT	4.0000	UGL	EE
ASB	1A	080586	MANGANESE		78.0000	UGL	EE
ASB	1A	080586	LEAD	LT	6.0000	UGL	EE
ASB	1A	080586	PH		4.8000	PH	FD
ASB	1A	080586	TOTAL ORGANIC CARBON	LT	1000.0000	UGL	EE
ASB	1A	080586	TOTAL RADIUM		2.5000	PCL	RM
ASB	1A	080586	TOTAL ORGANIC HALOGENS		7.0000	UGL	EE
ASB	1A	101286	BROMODICHLOROMETHANE	LT	5.0000	UGL	EE
ASB	1A	101286	TRICHLOROFLUOROMETHANE	LT	5.0000	UGL	EE
ASB	1A	101286	CARBON TETRACHLORIDE	LT	5.0000	UGL	EE
ASB	1A	101286	BROMOFORM	LT	10.0000	UGL	EE
ASB	1A	101286	CHLOROFORM	LT	5.0000	UGL	EE
ASB	1A	101286	BROMOMETHANE	LT	10.0000	UGL	EE
ASB	1A	101286	CHLOROMETHANE	LT	10.0000	UGL	EE
ASB	1A	101286	CHLOROBENZENE	LT	5.0000	UGL	EE
ASB	1A	101286	SPECIFIC CONDUCTANCE		40.0000	UMHC	FD
ASB	1A	101286	CHROMIUM	LT	4.0000	UGL	EE
ASB	1A	101286	CHLOROETHENE	LT	10.0000	UGL	EE
ASB	1A	101286	CHLOROETHANE	LT	10.0000	UGL	EE
ASB	1A	101286	BENZENE	LT	5.0000	UGL	EE
ASB	1A	101286	DIBROMOCHLOROMETHANE	LT	5.0000	UGL	EE
ASB	1A	101286	ETHYLBENZENE	LT	5.0000	UGL	EE
ASB	1A	101286	TOLUENE-D8		100.0000	PER	EE
ASB	1A	101286	TOLUENE	LT	5.0000	UGL	EE

Raw Data for ASB 1A

ASB	1A	101286	SODIUM		2010.0000	UGL	EE
ASB	1A	101286	P-BROMOFLUOROBENZENE		99.0000	PER	EE
ASB	1A	101286	PH		4.3000	PH	FD
ASB	1A	101286	1,1,2,2-TETRACHLOROETHANE	LT	10.0000	UGL	EE
ASB	1A	101286	TETRACHLOROETHYLENE	LT	5.0000	UGL	EE
ASB	1A	101286	TOTAL ORGANIC HALOGENS		5.0000	UGL	EE
ASB	1A	101286	TRICHLOROETHYLENE	LT	5.0000	UGL	EE
ASB	1A	101286	TRANS-1,2-DICHLOROETHENE	LT	5.0000	UGL	EE
ASB	1A	101286	1,1-DICHLOROETHYLENE	LT	5.0000	UGL	EE
ASB	1A	101286	1,1-DICHLOROETHANE	LT	5.0000	UGL	EE
ASB	1A	101286	1,1,1-TRICHLOROETHANE	LT	5.0000	UGL	EE
ASB	1A	101286	1,1,2-TRICHLOROETHANE	LT	5.0000	UGL	EE
ASB	1A	101286	1,2-DICHLOROETHANE-D4		94.0000	PER	EE
ASB	1A	101286	1,2-DICHLOROETHANE	LT	1.0000	UGL	EE
ASB	1A	101286	1,2-DICHLOROPROPANE	LT	10.0000	UGL	EE
ASB	1A	101286	CIS-1,3-DICHLOROPROPENE	LT	5.0000	UGL	EE
ASB	1A	101286	TRANS-1,3-DICHLOROPROPENE	LT	5.0000	UGL	EE
ASB	1A	101286	2-CHLOROETHYLVINYL ETHER	LT	10.0000	UGL	EE
ASB	1A	012087	SILVER	LT	2.0000	UGL	EE
ASB	1A	012087	GROSS ALPHA		3.3000	PCL	RM
ASB	1A	012087	GROSS ALPHA		2.4000	PCL	RM
ASB	1A	012087	ARSENIC	LT	2.0000	UGL	EE
ASB	1A	012087	BARIUM		12.0000	UGL	EE
ASB	1A	012087	NONVOLATILE BETA		2.6000	PCL	RM
ASB	1A	012087	NONVOLATILE BETA		3.5000	PCL	RM
ASB	1A	012087	CALCIUM		2070.0000	UGL	EE
ASB	1A	012087	CARBON TETRACHLORIDE	LT	1.0000	UGL	EE
ASB	1A	012087	CADMIUM	LT	2.0000	UGL	EE
ASB	1A	012087	CHLOROFORM	LT	1.0000	UGL	EE
ASB	1A	012087	CHLORIDE		5800.0000	UGL	EE
ASB	1A	012087	SPECIFIC CONDUCTANCE		53.0000	UMHC	FD
ASB	1A	012087	CHROMIUM	LT	4.0000	UGL	EE
ASB	1A	012087	FLUORIDE		120.0000	UGL	EE
ASB	1A	012087	IRON		13.0000	UGL	EE
ASB	1A	012087	MERCURY	LT	0.2000	UGL	EE
ASB	1A	012087	POTASSIUM		375.0000	UGL	EE
ASB	1A	012087	MAGNESIUM		752.0000	UGL	EE
ASB	1A	012087	MANGANESE		92.0000	UGL	EE
ASB	1A	012087	SODIUM		2160.0000	UGL	EE
ASB	1A	012087	NICKEL	LT	4.0000	UGL	EE
ASB	1A	012087	NITRATE AS NITROGEN		120.0000	UGL	EE
ASB	1A	012087	LEAD		7.0000	UGL	EE
ASB	1A	012087	PH		4.0000	PH	FD
ASB	1A	012087	PHENOLS	LT	2.0000	UGL	EE
ASB	1A	012087	SELENIUM	LT	2.0000	UGL	EE
ASB	1A	012087	SILICA		2070.0000	UGL	EE
ASB	1A	012087	SULFATE		3600.0000	UGL	EE
ASB	1A	012087	SULFATE		4300.0000	UGL	EE
ASB	1A	012087	TETRACHLOROETHYLENE	LT	1.0000	UGL	EE
ASB	1A	012087	TOTAL DISSOLVED SOLIDS		44000.0000	UGL	EE
ASB	1A	012087	TOTAL DISSOLVED SOLIDS		42000.0000	UGL	EE
ASB	1A	012087	TOTAL ORGANIC CARBON		1000.0000	UGL	EE
ASB	1A	012087	TOTAL RADIUM		2.6000	PCL	RM
ASB	1A	012087	TOTAL RADIUM		3.1000	PCL	RM
ASB	1A	012087	TOTAL ORGANIC HALOGENS		5.3000	UGL	EE
ASB	1A	012087	TOTAL PHOSPHATES		30.0000	UGL	EE
ASB	1A	012087	TRICHLOROETHYLENE	LT	1.0000	UGL	EE
ASB	1A	012087	TRITIUM		1.5800	PCML	RM
ASB	1A	012087	TRITIUM		1.5800	PCML	RM
ASB	1A	012087	1,1,1-TRICHLOROETHANE	LT	1.0000	UGL	EE
ASB	1A	012087	ZINC		15.0000	UGL	EE
ASB	1A	042587	CARBON TETRACHLORIDE	LT	1.0000	UGL	EE
ASB	1A	042587	CARBON TETRACHLORIDE	LT	1.0000	UGL	EE
ASB	1A	042587	CHLOROFORM	LT	1.0000	UGL	EE

Raw Data for ASB 1A

ASB	1A	042587	CHLOROFORM	LT	1.0000	UGL	EE
ASB	1A	042587	SPECIFIC CONDUCTANCE		47.0000	UMHC	FD
ASB	1A	042587	PH		4.9000	PH	FD
ASB	1A	042587	TETRACHLOROETHYLENE		4.1000	UGL	EE
ASB	1A	042587	TETRACHLOROETHYLENE		2.3000	UGL	EE
ASB	1A	042587	TRICHLOROETHYLENE	LT	1.0000	UGL	EE
ASB	1A	042587	TRICHLOROETHYLENE	LT	1.0000	UGL	EE
ASB	1A	042587	1,1,1-TRICHLOROETHANE	LT	1.0000	UGL	EE
ASB	1A	042587	1,1,1-TRICHLOROETHANE	LT	1.0000	UGL	EE
ASB	1A	080287	GROSS ALPHA		2.1000	PCL	RM
ASB	1A	080287	CARBON TETRACHLORIDE	LT	1.0000	UGL	EE
ASB	1A	080287	CHLOROFORM	LT	1.0000	UGL	EE
ASB	1A	080287	SPECIFIC CONDUCTANCE		51.0000	UMHC	FD
ASB	1A	080287	CHROMIUM	LT	4.0000	UGL	EE
ASB	1A	080287	IRON		22.0000	UGL	EE
ASB	1A	080287	MANGANESE		130.0000	UGL	EE
ASB	1A	080287	SODIUM		3220.0000	UGL	EE
ASB	1A	080287	LEAD		6.0000	UGL	EE
ASB	1A	080287	PH		5.6000	PH	FD
ASB	1A	080287	TETRACHLOROETHYLENE		3.5800	UGL	EE
ASB	1A	080287	TOTAL ORGANIC CARBON	LT	1000.0000	UGL	EE
ASB	1A	080287	TOTAL RADIUM		4.8000	PCL	RM
ASB	1A	080287	TOTAL ORGANIC HALOGENS		8.0000	UGL	EE
ASB	1A	080287	TRICHLOROETHYLENE	LT	1.0000	UGL	EE
ASB	1A	080287	1,1,1-TRICHLOROETHANE	LT	1.0000	UGL	EE
ASB	1A	101887	CARBON TETRACHLORIDE	LT	1.0000	UGL	EE
ASB	1A	101887	CHLOROFORM	LT	1.0000	UGL	EE
ASB	1A	101887	SPECIFIC CONDUCTANCE		54.0000	UMHC	FD
ASB	1A	101887	PH		5.2000	PH	FD
ASB	1A	101887	TETRACHLOROETHYLENE		2.9900	UGL	EE
ASB	1A	101887	TRICHLOROETHYLENE	LT	1.0000	UGL	EE
ASB	1A	101887	1,1,1-TRICHLOROETHANE	LT	1.0000	UGL	EE
ASB	1A	012688	GROSS ALPHA		7.2000	PCL	EE
ASB	1A	012688	NONVOLATILE BETA		6.2000	PCL	EE
ASB	1A	012688	CARBON TETRACHLORIDE	LT	1.0000	UGL	EE
ASB	1A	012688	CADMIUM	LT	2.0000	UGL	EE
ASB	1A	012688	CADMIUM	LT	2.0000	UGL	EE
ASB	1A	012688	CHLOROFORM	LT	1.0000	UGL	EE
ASB	1A	012688	CHLORIDE		5300.0000	UGL	EE
ASB	1A	012688	SPECIFIC CONDUCTANCE		42.0000	UMHC	FD
ASB	1A	012688	COPPER		8.0000	UGL	EE
ASB	1A	012688	COPPER		8.0000	UGL	EE
ASB	1A	012688	IRON		13.0000	UGL	EE
ASB	1A	012688	IRON		14.0000	UGL	EE
ASB	1A	012688	MERCURY	LT	0.2000	UGL	EE
ASB	1A	012688	MERCURY	LT	0.2000	UGL	EE
ASB	1A	012688	MANGANESE		65.0000	UGL	EE
ASB	1A	012688	MANGANESE		67.0000	UGL	EE
ASB	1A	012688	SODIUM		3990.0000	UGL	EE
ASB	1A	012688	SODIUM		4130.0000	UGL	EE
ASB	1A	012688	NICKEL	LT	4.0000	UGL	EE
ASB	1A	012688	NICKEL	LT	4.0000	UGL	EE
ASB	1A	012688	LEAD		7.0000	UGL	EE
ASB	1A	012688	LEAD	LT	6.0000	UGL	EE
ASB	1A	012688	PH		5.2000	PH	FD
ASB	1A	012688	SULFATE		10000.0000	UGL	EE
ASB	1A	012688	TETRACHLOROETHYLENE		3.4900	UGL	EE
ASB	1A	012688	TOTAL ORGANIC CARBON	LT	1000.0000	UGL	EE
ASB	1A	012688	TOTAL ORGANIC CARBON	LT	1000.0000	UGL	EE
ASB	1A	012688	TOTAL RADIUM		3.4000	PCL	EE
ASB	1A	012688	TOTAL ORGANIC HALOGENS	LT	5.0000	UGL	EE
ASB	1A	012688	TRICHLOROETHYLENE	LT	1.0000	UGL	EE
ASB	1A	012688	1,1,1-TRICHLOROETHANE	LT	1.0000	UGL	EE
ASB	1A	040588	CHLOROFORM	LT	1.0000	UGL	MA

Raw Data for ASB 1A

ASB	1A	040588	SPECIFIC CONDUCTANCE		57.0000	UMHC	FD
ASB	1A	040588	PH		5.4000	PH	FD
ASB	1A	040588	TETRACHLOROETHYLENE	LT	1.0000	UGL	MA
ASB	1A	040588	TRICHLOROETHYLENE	LT	1.0000	UGL	MA
ASB	1A	040588	1,1,1-TRICHLOROETHANE	LT	1.0000	UGL	MA
ASB	1A	070788	SILVER	LT	2.0000	UGL	EE
ASB	1A	070788	GROSS ALPHA		6.6100	PCL	EE
ASB	1A	070788	ARSENIC	LT	2.0000	UGL	EE
ASB	1A	070788	BARIUM		8.0000	UGL	EE
ASB	1A	070788	NONVOLATILE BETA		4.8700	PCL	EE
ASB	1A	070788	CALCIUM		1420.0000	UGL	EE
ASB	1A	070788	CARBON TETRACHLORIDE	LT	1.0000	UGL	EE
ASB	1A	070788	CADMIUM	LT	2.0000	UGL	EE
ASB	1A	070788	CERIUM 144		0.0000	PCML	SR
ASB	1A	070788	CHLOROFORM	LT	1.0000	UGL	EE
ASB	1A	070788	CHLOROFORM	LT	1.0000	UGL	MA
ASB	1A	070788	CHLORIDE		5600.0000	UGL	EE
ASB	1A	070788	SPECIFIC CONDUCTANCE		47.0000	UMHC	FD
ASB	1A	070788	COBALT 60		0.0000	PCML	SR
ASB	1A	070788	CHROMIUM	LT	4.0000	UGL	EE
ASB	1A	070788	CHROMIUM 51		0.0000	PCML	SR
ASB	1A	070788	CESIUM 134		0.0000	PCML	SR
ASB	1A	070788	CESIUM 137		0.0000	PCML	SR
ASB	1A	070788	FLUORIDE	LT	100.0000	UGL	EE
ASB	1A	070788	IRON		123.0000	UGL	EE
ASB	1A	070788	MERCURY	LT	0.2000	UGL	EE
ASB	1A	070788	IODINE 131		0.0000	PCML	SR
ASB	1A	070788	POTASSIUM	LT	500.0000	UGL	EE
ASB	1A	070788	MAGNESIUM		501.0000	UGL	EE
ASB	1A	070788	MANGANESE		61.0000	UGL	EE
ASB	1A	070788	SODIUM		4520.0000	UGL	EE
ASB	1A	070788	NITRATE AS NITROGEN		270.0000	UGL	EE
ASB	1A	070788	LEAD	LT	6.0000	UGL	EE
ASB	1A	070788	LEAD 214		0.0930	PCML	SR
ASB	1A	070788	PH		4.9000	PH	FD
ASB	1A	070788	PHENOLS	LT	5.0000	UGL	EE
ASB	1A	070788	RUTHENIUM 103		0.0000	PCML	SR
ASB	1A	070788	RUTHENIUM 106		0.0000	PCML	SR
ASB	1A	070788	ANTIMONY 125		0.0000	PCML	SR
ASB	1A	070788	SELENIUM	LT	2.0000	UGL	EE
ASB	1A	070788	SELENIUM	LT	2.0000	UGL	EE
ASB	1A	070788	SILICA		1510.0000	UGL	EE
ASB	1A	070788	SULFATE		5100.0000	UGL	EE
ASB	1A	070788	TETRACHLOROETHYLENE		2.3700	UGL	EE
ASB	1A	070788	TETRACHLOROETHYLENE		2.3100	UGL	MA
ASB	1A	070788	TOTAL ORGANIC CARBON	LT	1000.0000	UGL	EE
ASB	1A	070788	TOTAL RADIUM		2.3200	PCL	EE
ASB	1A	070788	TOTAL ORGANIC HALOGENS		22.0000	UGL	EE
ASB	1A	070788	TOTAL PHOSPHATES		40.0000	UGL	EE
ASB	1A	070788	TRICHLOROETHYLENE	LT	1.0000	UGL	EE
ASB	1A	070788	TRICHLOROETHYLENE	LT	1.0000	UGL	MA
ASB	1A	070788	TRITIUM		1.1700	PCML	EE
ASB	1A	070788	TRANS-1,2-DICHLOROETHENE	LT	1.0000	UGL	MA
ASB	1A	070788	1,1-DICHLOROETHYLENE	LT	1.0000	UGL	MA
ASB	1A	070788	1,1,1-TRICHLOROETHANE	LT	1.0000	UGL	EE
ASB	1A	070788	1,1,1-TRICHLOROETHANE	LT	1.0000	UGL	MA
ASB	1A	070788	ZIRCONIUM/NIOBIUM 95		0.0000	PCML	SR
ASB	1A	102688	CHLOROFORM	LT	1.0000	UGL	MA
ASB	1A	102688	CHLOROFORM	LT	1.0000	UGL	MA
ASB	1A	102688	SPECIFIC CONDUCTANCE		56.0000	UMHC	FD
ASB	1A	102688	SPECIFIC CONDUCTANCE		56.0000	UMHC	FD
ASB	1A	102688	PH		4.9000	PH	FD
ASB	1A	102688	PH		4.9000	PH	FD
ASB	1A	102688	TETRACHLOROETHYLENE		2.9300	UGL	MA

Raw Data for ASB 1A

ASB	1A	102688	TETRACHLOROETHYLENE		3.4900	UGL	MA
ASB	1A	102688	TRICHLOROETHYLENE	LT	1.0000	UGL	MA
ASB	1A	102688	TRICHLOROETHYLENE		1.4000	UGL	MA
ASB	1A	102688	TRANS-1,2-DICHLOROETHENE	LT	1.0000	UGL	MA
ASB	1A	102688	TRANS-1,2-DICHLOROETHENE	LT	1.0000	UGL	MA
ASB	1A	102688	1,1-DICHLOROETHYLENE	LT	1.0000	UGL	MA
ASB	1A	102688	1,1-DICHLOROETHYLENE	LT	1.0000	UGL	MA
ASB	1A	102688	1,1,1-TRICHLOROETHANE	LT	1.0000	UGL	MA
ASB	1A	102688	1,1,1-TRICHLOROETHANE	LT	1.0000	UGL	MA
ASB	1A	032689	SILVER	LT	2.0000	UGL	EE
ASB	1A	032689	GROSS ALPHA		3.3500	PCL	RM
ASB	1A	032689	AMERICIUM 241		0.1100	PCL	TE
ASB	1A	032689	ARSENIC	LT	2.0000	UGL	EE
ASB	1A	032689	BARIUM		6.0000	UGL	EE
ASB	1A	032689	BARIUM 140	LT	9.0000	PCL	TE
ASB	1A	032689	NONVOLATILE BETA		3.0500	PCL	RM
ASB	1A	032689	BERYLLIUM 7	LT	50.0000	PCL	TE
ASB	1A	032689	CALCIUM		958.0000	UGL	EE
ASB	1A	032689	CARBON TETRACHLORIDE	LT	1.0000	UGL	EE
ASB	1A	032689	CADMIUM	LT	2.0000	UGL	EE
ASB	1A	032689	CERIUM 141	LT	10.0000	PCL	TE
ASB	1A	032689	CERIUM 144		0.0000	PCML	SR
ASB	1A	032689	CERIUM 144	LT	50.0000	PCL	TE
ASB	1A	032689	CHLOROFORM	LT	1.0000	UGL	EE
ASB	1A	032689	CHLOROFORM	LT	1.0000	UGL	MA
ASB	1A	032689	CHLORIDE		8100.0000	UGL	EE
ASB	1A	032689	CURIUM 242		0.6300	PCL	TE
ASB	1A	032689	CURIUM 243/244	LT	0.3000	PCL	TE
ASB	1A	032689	SPECIFIC CONDUCTANCE		57.0000	UMHC	FD
ASB	1A	032689	COBALT 58	LT	5.0000	PCL	TE
ASB	1A	032689	COBALT 60		0.0000	PCML	SR
ASB	1A	032689	COBALT 60	LT	6.0000	PCL	TE
ASB	1A	032689	CHROMIUM	LT	4.0000	UGL	EE
ASB	1A	032689	CHROMIUM 51		0.0000	PCML	SR
ASB	1A	032689	CESIUM 134		0.0000	PCML	SR
ASB	1A	032689	CESIUM 134	LT	6.0000	PCL	TE
ASB	1A	032689	CESIUM 137		0.0000	PCML	SR
ASB	1A	032689	CESIUM 137	LT	5.0000	PCL	TE
ASB	1A	032689	COPPER		19.0000	UGL	EE
ASB	1A	032689	FLUORIDE	LT	100.0000	UGL	EE
ASB	1A	032689	IRON		33.0000	UGL	EE
ASB	1A	032689	IRON 59	LT	10.0000	PCL	TE
ASB	1A	032689	MERCURY	LT	0.2000	UGL	EE
ASB	1A	032689	IODINE 131		0.0000	PCML	SR
ASB	1A	032689	IODINE 131	LT	10.0000	PCL	TE
ASB	1A	032689	POTASSIUM	LT	500.0000	UGL	EE
ASB	1A	032689	POTASSIUM 40	LT	100.0000	PCL	TE
ASB	1A	032689	MAGNESIUM		332.0000	UGL	EE
ASB	1A	032689	MANGANESE		36.0000	UGL	EE
ASB	1A	032689	MANGANESE 54	LT	5.0000	PCL	TE
ASB	1A	032689	SODIUM		8600.0000	UGL	EE
ASB	1A	032689	NICKEL	LT	4.0000	UGL	EE
ASB	1A	032689	NITRATE AS NITROGEN		186.0000	UGL	EE
ASB	1A	032689	LEAD	LT	6.0000	UGL	EE
ASB	1A	032689	PH		5.2000	PH	FD
ASB	1A	032689	PHENOLS	LT	5.0000	UGL	EE
ASB	1A	032689	PLUTONIUM 238		0.3500	PCL	TE
ASB	1A	032689	PLUTONIUM 239/240		0.1500	PCL	TE
ASB	1A	032689	RADIUM 226	LT	100.0000	PCL	TE
ASB	1A	032689	RADIUM 226		1.2000	PCL	TE
ASB	1A	032689	RADIUM 228		1.2000	PCL	TE
ASB	1A	032689	RUTHENIUM 103		0.0000	PCML	SR
ASB	1A	032689	RUTHENIUM 103	LT	6.0000	PCL	TE
ASB	1A	032689	RUTHENIUM 106		0.0000	PCML	SR

Raw Data for ASB 1A

ASB	1A	032689	RUTHENIUM 106	LT	50.0000	PCL	TE
ASB	1A	032689	ANTIMONY 125		0.0000	PCML	SR
ASB	1A	032689	SELENIUM	LT	2.0000	UGL	EE
ASB	1A	032689	SILICA		3820.0000	UGL	EE
ASB	1A	032689	SULFATE		9100.0000	UGL	EE
ASB	1A	032689	STRONTIUM 89	LT	3.0000	PCL	TE
ASB	1A	032689	STRONTIUM 90	LT	1.0000	PCL	TE
ASB	1A	032689	TETRACHLOROETHYLENE		3.7500	UGL	EE
ASB	1A	032689	TETRACHLOROETHYLENE		2.3300	UGL	MA
ASB	1A	032689	TOTAL DISSOLVED SOLIDS		16000.0000	UGL	EE
ASB	1A	032689	THORIUM 228	LT	10.0000	PCL	TE
ASB	1A	032689	TOTAL ORGANIC CARBON		1100.0000	UGL	EE
ASB	1A	032689	TOTAL RADIUM		1.6200	PCL	RM
ASB	1A	032689	TOTAL ORGANIC HALOGENS	LT	5.0000	UGL	EE
ASB	1A	032689	TOTAL PHOSPHATES	LT	20.0000	UGL	EE
ASB	1A	032689	TRICHLOROETHYLENE		1.3600	UGL	EE
ASB	1A	032689	TRICHLOROETHYLENE	LT	1.0000	UGL	MA
ASB	1A	032689	TRITIUM		0.5100	PCML	RM
ASB	1A	032689	TRANS-1,2-DICHLOROETHENE	LT	1.0000	UGL	MA
ASB	1A	032689	URANIUM 234	LT	1.0000	PCL	TE
ASB	1A	032689	URANIUM 235	LT	0.4000	PCL	TE
ASB	1A	032689	1,1-DICHLOROETHYLENE	LT	1.0000	UGL	MA
ASB	1A	032689	1,1,1-TRICHLOROETHANE	LT	1.0000	UGL	EE
ASB	1A	032689	1,1,1-TRICHLOROETHANE	LT	1.0000	UGL	MA
ASB	1A	032689	ZINC 65	LT	10.0000	PCL	TE
ASB	1A	032689	ZIRCONIUM/NIOBIUM 95		0.0000	PCML	SR
ASB	1A	032689	ZIRCONIUM 95	LT	5.0000	PCL	TE

T-Test Data

This Page Intentionally Left Blank.

T-Test Data for ASB 1A

OBS	SERIES	WELL	DATE	TESTNAME	VALUE
1	ASB	BKG	12687	ALUMINUM	43.00
2	ASB	BKG	12987	ALUMINUM	35.33
3	ASB	BKG	20789	ALUMINUM	80.00
4	ASB	BKG	22488	[illegible]MINUM	59.00
5	ASB	BKG	31289	ALUMINUM	46.50
6	ASB	BKG	40687	ALUMINUM	42.50
7	ASB	BKG	51088	ALUMINUM	253.00
8	ASB	BKG	51188	ALUMINUM	314.00
9	ASB	BKG	61886	ALUMINUM	62.00
10	ASB	BKG	72286	ALUMINUM	37.50
11	ASB	BKG	72386	ALUMINUM	45.00
12	ASB	BKG	80487	ALUMINUM	61.00
13	ASB	BKG	81388	ALUMINUM	42.00
14	ASB	BKG	81488	ALUMINUM	43.00
15	ASB	BKG	102888	ALUMINUM	51.00
16	ASB	BKG	110286	ALUMINUM	33.00
17	ASB	BKG	110386	ALUMINUM	37.67
18	ASB	BKG	110888	ALUMINUM	44.00
19	ASB	BKG	121787	ALUMINUM	74.00
20	ASB	BKG	121987	ALUMINUM	79.00
21	ASB	1A	12087	BARIUM	12.00
22	ASB	1A	22585	BARIUM	12.00
23	ASB	1A	32689	BARIUM	6.00
24	ASB	1A	70788	BARIUM	8.00
25	ASB	1A	81584	BARIUM	8.00
26	ASB	1A	112884	BARIUM	8.00
27	ASB	BKG	12687	BARIUM	7.50
28	ASB	BKG	12987	BARIUM	3.33
29	ASB	BKG	20789	BARIUM	5.00
30	ASB	BKG	22488	BARIUM	8.00
31	ASB	BKG	31289	BARIUM	8.50
32	ASB	BKG	51088	BARIUM	7.00
33	ASB	BKG	51188	BARIUM	2.00
34	ASB	BKG	61886	BARIUM	2.00
35	ASB	BKG	72286	BARIUM	4.00
36	ASB	BKG	72386	BARIUM	7.00
37	ASB	BKG	80487	BARIUM	6.50
38	ASB	BKG	81388	BARIUM	2.00
39	ASB	BKG	81488	BARIUM	6.00
40	ASB	BKG	102888	BARIUM	4.00
41	ASB	BKG	110286	BARIUM	2.00
42	ASB	BKG	110386	BARIUM	7.00
43	ASB	BKG	110888	BARIUM	9.00
44	ASB	BKG	121787	BARIUM	14.00
45	ASB	BKG	121987	BARIUM	5.00
46	ASB	BKG	12687	CALCIUM	265.00
47	ASB	BKG	12987	CALCIUM	876.33
48	ASB	BKG	110286	CALCIUM	983.50
49	ASB	BKG	110386	CALCIUM	655.00
50	ASB	1A	12087	CHLORIDE	5800.00
51	ASB	1A	12688	CHLORIDE	5300.00
52	ASB	1A	21286	CHLORIDE	6900.00
53	ASB	1A	22585	CHLORIDE	7770.00
54	ASB	1A	32689	CHLORIDE	8100.00

T-Test Data for ASB 1A

OBS	SERIES	WELL	DATE	TESTNAME	VALUE
55	ASB	1A	70788	CHLORIDE	5600.00
56	ASB	1A	81584	CHLORIDE	6450.00
57	ASB	1A	112884	CHLORIDE	5200.00
58	ASB	BKG	12687	CHLORIDE	2500.00
59	ASB	BKG	12987	CHLORIDE	2900.00
60	ASB	BKG	20789	CHLORIDE	2200.00
61	ASB	BKG	22488	CHLORIDE	2150.00
62	ASB	BKG	31289	CHLORIDE	2500.00
63	ASB	BKG	51088	CHLORIDE	2450.00
64	ASB	BKG	51188	CHLORIDE	2000.00
65	ASB	BKG	61886	CHLORIDE	4166.67
66	ASB	BKG	72286	CHLORIDE	2270.00
67	ASB	BKG	72386	CHLORIDE	2270.00
68	ASB	BKG	80487	CHLORIDE	2950.00
69	ASB	BKG	81388	CHLORIDE	2400.00
70	ASB	BKG	81488	CHLORIDE	2300.00
71	ASB	BKG	102888	CHLORIDE	2100.00
72	ASB	BKG	110286	CHLORIDE	3400.00
73	ASB	BKG	110386	CHLORIDE	2800.00
74	ASB	BKG	110888	CHLORIDE	2200.00
75	ASB	BKG	121987	CHLORIDE	2400.00
76	ASB	1A	12688	COPPER	8.00
77	ASB	1A	32689	COPPER	19.00
78	ASB	1A	81584	COPPER	2.00
79	ASB	1A	112884	COPPER	2.00
80	ASB	BKG	12687	COPPER	4.50
81	ASB	BKG	12987	COPPER	2.00
82	ASB	BKG	20789	COPPER	11.00
83	ASB	BKG	22488	COPPER	7.50
84	ASB	BKG	31289	COPPER	5.50
85	ASB	BKG	51088	COPPER	6.00
86	ASB	BKG	51188	COPPER	5.00
87	ASB	BKG	61886	COPPER	5.50
88	ASB	BKG	72286	COPPER	6.00
89	ASB	BKG	72386	COPPER	3.00
90	ASB	BKG	80487	COPPER	8.50
91	ASB	BKG	81388	COPPER	2.00
92	ASB	BKG	81488	COPPER	4.00
93	ASB	BKG	102888	COPPER	5.00
94	ASB	BKG	110286	COPPER	9.50
95	ASB	BKG	110386	COPPER	9.00
96	ASB	BKG	110888	COPPER	15.00
97	ASB	BKG	121787	COPPER	15.00
98	ASB	BKG	121987	COPPER	5.00
99	ASB	1A	12087	GROSS ALPHA	2.50
100	ASB	1A	12688	GROSS ALPHA	7.00
101	ASB	1A	21286	GROSS ALPHA	8.00
102	ASB	1A	22585	GROSS ALPHA	8.00
103	ASB	1A	32689	GROSS ALPHA	3.00
104	ASB	1A	70788	GROSS ALPHA	7.00
105	ASB	1A	80287	GROSS ALPHA	2.00
106	ASB	1A	80586	GROSS ALPHA	1.50
107	ASB	1A	81584	GROSS ALPHA	1.00
108	ASB	1A	112884	GROSS ALPHA	10.00

T-Test Data for ASB 1A

OBS	SERIES	WELL	DATE	TESTNAME	VALUE
109	ASB	BKG	12687	GROSS ALPHA	7.000
110	ASB	BKG	12987	GROSS ALPHA	1.000
111	ASB	BKG	20789	GROSS ALPHA	1.500
112	ASB	BKG	22488	GROSS ALPHA	14.500
113	ASB	BKG	31289	GROSS ALPHA	23.750
114	ASB	BKG	40687	GROSS ALPHA	5.250
115	ASB	BKG	61886	GROSS ALPHA	5.750
116	ASB	BKG	72286	GROSS ALPHA	1.500
117	ASB	BKG	72386	GROSS ALPHA	7.000
118	ASB	BKG	80487	GROSS ALPHA	3.750
119	ASB	BKG	110286	GROSS ALPHA	1.500
120	ASB	BKG	110386	GROSS ALPHA	7.500
121	ASB	BKG	121787	GROSS ALPHA	22.000
122	ASB	BKG	121987	GROSS ALPHA	1.000
123	ASB	1A	12087	IRON	13.000
124	ASB	1A	12688	IRON	13.500
125	ASB	1A	21286	IRON	7.000
126	ASB	1A	22585	IRON	2.000
127	ASB	1A	32689	IRON	33.000
128	ASB	1A	70788	IRON	123.000
129	ASB	1A	80287	IRON	22.000
130	ASB	1A	81584	IRON	32.000
131	ASB	1A	112884	IRON	5.000
132	ASB	BKG	12687	IRON	19.500
133	ASB	BKG	12987	IRON	31.500
134	ASB	BKG	61886	IRON	39.000
135	ASB	BKG	72286	IRON	31.500
136	ASB	BKG	72386	IRON	31.333
137	ASB	BKG	80487	IRON	76.500
138	ASB	BKG	110286	IRON	33.500
139	ASB	BKG	110386	IRON	27.667
140	ASB	BKG	121787	IRON	33.000
141	ASB	BKG	121987	IRON	40.000
142	ASB	BKG	12687	LEAD	11.500
143	ASB	BKG	12987	LEAD	8.667
144	ASB	BKG	20789	LEAD	20.000
145	ASB	BKG	22488	LEAD	8.500
146	ASB	BKG	31289	LEAD	3.000
147	ASB	BKG	40687	LEAD	11.000
148	ASB	BKG	51088	LEAD	11.000
149	ASB	BKG	51188	LEAD	9.000
150	ASB	BKG	61886	LEAD	24.500
151	ASB	BKG	72286	LEAD	22.500
152	ASB	BKG	72386	LEAD	28.333
153	ASB	BKG	80487	LEAD	9.500
154	ASB	BKG	81388	LEAD	3.000
155	ASB	BKG	81488	LEAD	3.000
156	ASB	BKG	102888	LEAD	9.500
157	ASB	BKG	110286	LEAD	17.000
158	ASB	BKG	110386	LEAD	17.667
159	ASB	BKG	110888	LEAD	15.000
160	ASB	BKG	121787	LEAD	8.000
161	ASB	BKG	121987	LEAD	9.000
162	ASB	BKG	12687	MAGNESIUM	435.000

T-Test Data for ASB 1A

OBS	SERIES	WELL	DATE	TESTNAME	VALUE
163	ASB	BKG	12987	MAGNESIUM	481.00
164	ASB	BKG	110286	MAGNESIUM	485.00
165	ASB	BKG	110386	MAGNESIUM	443.33
166	ASB	1A	12087	MANGANESE	92.00
167	ASB	1A	12688	MANGANESE	66.00
168	ASB	1A	21286	MANGANESE	34.00
169	ASB	1A	22585	MANGANESE	20.00
170	ASB	1A	32689	MANGANESE	36.00
171	ASB	1A	70788	MANGANESE	61.00
172	ASB	1A	80287	MANGANESE	130.00
173	ASB	1A	80586	MANGANESE	78.00
174	ASB	1A	81584	MANGANESE	120.00
175	ASB	1A	112884	MANGANESE	98.00
176	ASB	BKG	12687	MANGANESE	3.50
177	ASB	BKG	12987	MANGANESE	19.33
178	ASB	BKG	20789	MANGANESE	17.00
179	ASB	BKG	31289	MANGANESE	3.50
180	ASB	BKG	61886	MANGANESE	14.00
181	ASB	BKG	72286	MANGANESE	24.50
182	ASB	BKG	72386	MANGANESE	5.00
183	ASB	BKG	80487	MANGANESE	11.00
184	ASB	BKG	81388	MANGANESE	13.00
185	ASB	BKG	81488	MANGANESE	3.00
186	ASB	BKG	110286	MANGANESE	21.00
187	ASB	BKG	110386	MANGANESE	5.00
188	ASB	BKG	121787	MANGANESE	14.00
189	ASB	BKG	121987	MANGANESE	15.00
190	ASB	1A	12087	NITRATE AS NITROGEN	120.00
191	ASB	1A	22585	NITRATE AS NITROGEN	250.00
192	ASB	1A	32689	NITRATE AS NITROGEN	186.00
193	ASB	1A	70788	NITRATE AS NITROGEN	270.00
194	ASB	1A	81584	NITRATE AS NITROGEN	250.00
195	ASB	1A	112884	NITRATE AS NITROGEN	250.00
196	ASB	BKG	12687	NITRATE AS NITROGEN	2180.00
197	ASB	BKG	12987	NITRATE AS NITROGEN	1200.00
198	ASB	BKG	20789	NITRATE AS NITROGEN	998.00
199	ASB	BKG	22488	NITRATE AS NITROGEN	1525.00
200	ASB	BKG	31289	NITRATE AS NITROGEN	1990.00
201	ASB	BKG	40687	NITRATE AS NITROGEN	1670.00
202	ASB	BKG	51088	NITRATE AS NITROGEN	1560.00
203	ASB	BKG	51188	NITRATE AS NITROGEN	880.00
204	ASB	BKG	61886	NITRATE AS NITROGEN	1783.33
205	ASB	BKG	72286	NITRATE AS NITROGEN	1190.00
206	ASB	BKG	72386	NITRATE AS NITROGEN	2070.00
207	ASB	BKG	80487	NITRATE AS NITROGEN	1675.00
208	ASB	BKG	81388	NITRATE AS NITROGEN	1080.00
209	ASB	BKG	81488	NITRATE AS NITROGEN	1980.00
210	ASB	BKG	102888	NITRATE AS NITROGEN	1210.00
211	ASB	BKG	110286	NITRATE AS NITROGEN	1170.00
212	ASB	BKG	110386	NITRATE AS NITROGEN	2140.00
213	ASB	BKG	110888	NITRATE AS NITROGEN	2240.00
214	ASB	BKG	121787	NITRATE AS NITROGEN	3040.00
215	ASB	BKG	121987	NITRATE AS NITROGEN	1370.00
216	ASB	1A	12087	NONVOLATILE BETA	3.50

T-Test Data for ASB 1A

OBS	SERIES	WELL	DATE	TESTNAME	VALUE
217	ASB	1A	12688	NONVOLATILE BETA	6.0000
218	ASB	1A	21286	NONVOLATILE BETA	4.0000
219	ASB	1A	22585	NONVOLATILE BETA	5.0000
220	ASB	1A	32689	NONVOLATILE BETA	3.0000
221	ASB	1A	70788	NONVOLATILE BETA	5.0000
222	ASB	1A	81584	NONVOLATILE BETA	1.5000
223	ASB	1A	112884	NONVOLATILE BETA	7.0000
224	ASB	BKG	12687	NONVOLATILE BETA	5.0000
225	ASB	BKG	12987	NONVOLATILE BETA	2.0000
226	ASB	BKG	20789	NONVOLATILE BETA	1.0000
227	ASB	BKG	22488	NONVOLATILE BETA	8.6667
228	ASB	BKG	31289	NONVOLATILE BETA	14.2500
229	ASB	BKG	40687	NONVOLATILE BETA	4.5000
230	ASB	BKG	61886	NONVOLATILE BETA	4.0000
231	ASB	BKG	72286	NONVOLATILE BETA	1.0000
232	ASB	BKG	72386	NONVOLATILE BETA	4.0000
233	ASB	BKG	80487	NONVOLATILE BETA	3.0000
234	ASB	BKG	110286	NONVOLATILE BETA	1.0000
235	ASB	BKG	110386	NONVOLATILE BETA	5.5000
236	ASB	BKG	121787	NONVOLATILE BETA	14.0000
237	ASB	BKG	121987	NONVOLATILE BETA	3.0000
238	ASB	1A	12087	PH	4.0000
239	ASB	1A	12688	PH	5.0000
240	ASB	1A	21286	PH	4.0000
241	ASB	1A	22585	PH	6.0000
242	ASB	1A	32384	PH	6.0000
243	ASB	1A	32689	PH	5.0000
244	ASB	1A	40588	PH	5.0000
245	ASB	1A	41184	PH	6.0000
246	ASB	1A	41886	PH	5.0000
247	ASB	1A	42385	PH	5.0000
248	ASB	1A	42587	PH	5.0000
249	ASB	1A	70788	PH	5.0000
250	ASB	1A	80287	PH	6.0000
251	ASB	1A	80586	PH	5.0000
252	ASB	1A	81385	PH	5.0000
253	ASB	1A	81584	PH	4.0000
254	ASB	1A	101286	PH	4.0000
255	ASB	1A	101887	PH	5.0000
256	ASB	1A	102688	PH	5.0000
257	ASB	1A	102985	PH	5.0000
258	ASB	1A	112884	PH	5.0000
259	ASB	BKG	12687	PH	5.0000
260	ASB	BKG	12987	PH	4.0000
261	ASB	BKG	20789	PH	5.0000
262	ASB	BKG	22488	PH	5.0000
263	ASB	BKG	31289	PH	4.0000
264	ASB	BKG	40687	PH	4.5000
265	ASB	BKG	51088	PH	4.0000
266	ASB	BKG	51188	PH	5.0000
267	ASB	BKG	61886	PH	5.0000
268	ASB	BKG	72286	PH	5.0000
269	ASB	BKG	72386	PH	5.0000
270	ASB	BKG	80487	PH	5.0000

T-Test Data for ASB 1A

OBS	SERIES	WELL	DATE	TESTNAME	VALUE
271	ASB	BKG	81388	PH	5
272	ASB	BKG	81488	PH	4
273	ASB	BKG	90687	PH	5
274	ASB	BKG	90887	PH	5
275	ASB	BKG	102888	PH	5
276	ASB	BKG	110286	PH	4
277	ASB	BKG	110386	PH	4
278	ASB	BKG	110888	PH	5
279	ASB	BKG	121787	PH	4
280	ASB	BKG	121987	PH	5
281	ASB	1A	12087	SODIUM	2160
282	ASB	1A	12688	SODIUM	4060
283	ASB	1A	21286	SODIUM	2100
284	ASB	1A	22585	SODIUM	2250
285	ASB	1A	32689	SODIUM	8600
286	ASB	1A	42385	SODIUM	2050
287	ASB	1A	70788	SODIUM	4520
288	ASB	1A	80287	SODIUM	3220
289	ASB	1A	81385	SODIUM	3710
290	ASB	1A	81584	SODIUM	2180
291	ASB	1A	101286	SODIUM	2010
292	ASB	1A	102985	SODIUM	2290
293	ASB	1A	112884	SODIUM	2020
294	ASB	BKG	12687	SODIUM	4475
295	ASB	BKG	12987	SODIUM	1990
296	ASB	BKG	20789	SODIUM	1740
297	ASB	BKG	22488	SODIUM	2610
298	ASB	BKG	31289	SODIUM	2530
299	ASB	BKG	40687	SODIUM	2840
300	ASB	BKG	51088	SODIUM	3700
301	ASB	BKG	51188	SODIUM	1680
302	ASB	BKG	61886	SODIUM	2620
303	ASB	BKG	72286	SODIUM	1935
304	ASB	BKG	72386	SODIUM	4330
305	ASB	BKG	80487	SODIUM	2620
306	ASB	BKG	81388	SODIUM	1630
307	ASB	BKG	81488	SODIUM	3360
308	ASB	BKG	102888	SODIUM	1730
309	ASB	BKG	110286	SODIUM	1725
310	ASB	BKG	110386	SODIUM	3880
311	ASB	BKG	110888	SODIUM	3280
312	ASB	BKG	121787	SODIUM	3460
313	ASB	BKG	121987	SODIUM	1660
314	ASB	1A	12087	SPECIFIC CONDUCTANCE	53
315	ASB	1A	12688	SPECIFIC CONDUCTANCE	42
316	ASB	1A	21286	SPECIFIC CONDUCTANCE	41
317	ASB	1A	22585	SPECIFIC CONDUCTANCE	75
318	ASB	1A	32384	SPECIFIC CONDUCTANCE	47
319	ASB	1A	32689	SPECIFIC CONDUCTANCE	57
320	ASB	1A	40588	SPECIFIC CONDUCTANCE	57
321	ASB	1A	41184	SPECIFIC CONDUCTANCE	39
322	ASB	1A	41886	SPECIFIC CONDUCTANCE	42
323	ASB	1A	42385	SPECIFIC CONDUCTANCE	47
324	ASB	1A	42587	SPECIFIC CONDUCTANCE	47

T-Test Data for ASB 1A

OBS	SERIES	WELL	DATE	TESTNAME	VALUE
325	ASB	1A	70788	SPECIFIC CONDUCTANCE	47.0
326	ASB	1A	80287	SPECIFIC CONDUCTANCE	51.0
327	ASB	1A	80586	SPECIFIC CONDUCTANCE	37.0
328	ASB	1A	81385	SPECIFIC CONDUCTANCE	43.0
329	ASB	1A	81584	SPECIFIC CONDUCTANCE	43.0
330	ASB	1A	101286	SPECIFIC CONDUCTANCE	40.0
331	ASB	1A	101887	SPECIFIC CONDUCTANCE	54.0
332	ASB	1A	102688	SPECIFIC CONDUCTANCE	56.0
333	ASB	1A	102985	SPECIFIC CONDUCTANCE	35.0
334	ASB	1A	112884	SPECIFIC CONDUCTANCE	54.0
335	ASB	BKG	12687	SPECIFIC CONDUCTANCE	19.0
336	ASB	BKG	12987	SPECIFIC CONDUCTANCE	28.0
337	ASB	BKG	20789	SPECIFIC CONDUCTANCE	28.0
338	ASB	BKG	22488	SPECIFIC CONDUCTANCE	31.5
339	ASB	BKG	31289	SPECIFIC CONDUCTANCE	35.0
340	ASB	BKG	40687	SPECIFIC CONDUCTANCE	30.0
341	ASB	BKG	51088	SPECIFIC CONDUCTANCE	38.0
342	ASB	BKG	51188	SPECIFIC CONDUCTANCE	24.0
343	ASB	BKG	61886	SPECIFIC CONDUCTANCE	26.0
344	ASB	BKG	72286	SPECIFIC CONDUCTANCE	26.0
345	ASB	BKG	72386	SPECIFIC CONDUCTANCE	40.0
346	ASB	BKG	80487	SPECIFIC CONDUCTANCE	31.0
347	ASB	BKG	81388	SPECIFIC CONDUCTANCE	25.0
348	ASB	BKG	81488	SPECIFIC CONDUCTANCE	36.0
349	ASB	BKG	90687	SPECIFIC CONDUCTANCE	29.0
350	ASB	BKG	90887	SPECIFIC CONDUCTANCE	38.0
351	ASB	BKG	102888	SPECIFIC CONDUCTANCE	25.0
352	ASB	BKG	110286	SPECIFIC CONDUCTANCE	32.0
353	ASB	BKG	110386	SPECIFIC CONDUCTANCE	43.0
354	ASB	BKG	110888	SPECIFIC CONDUCTANCE	35.0
355	ASB	BKG	121787	SPECIFIC CONDUCTANCE	28.0
356	ASB	BKG	121987	SPECIFIC CONDUCTANCE	20.0
357	ASB	1A	12087	SULFATE	3950.0
358	ASB	1A	12688	SULFATE	10000.0
359	ASB	1A	21286	SULFATE	2500.0
360	ASB	1A	22585	SULFATE	2500.0
361	ASB	1A	32689	SULFATE	9100.0
362	ASB	1A	70788	SULFATE	5100.0
363	ASB	1A	81584	SULFATE	5000.0
364	ASB	1A	112884	SULFATE	2500.0
365	ASB	1A	12087	TETRACHLOROETHYLENE	0.5
366	ASB	1A	12688	TETRACHLOROETHYLENE	3.0
367	ASB	1A	32689	TETRACHLOROETHYLENE	4.0
368	ASB	1A	42587	TETRACHLOROETHYLENE	3.0
369	ASB	1A	70788	TETRACHLOROETHYLENE	2.0
370	ASB	1A	80287	TETRACHLOROETHYLENE	4.0
371	ASB	1A	101286	TETRACHLOROETHYLENE	2.5
372	ASB	1A	101887	TETRACHLOROETHYLENE	3.0
373	ASB	1A	12087	TOTAL DISSOLVED SOLIDS	43000.0
374	ASB	1A	32689	TOTAL DISSOLVED SOLIDS	16000.0
375	ASB	1A	81584	TOTAL DISSOLVED SOLIDS	20000.0
376	ASB	1A	112884	TOTAL DISSOLVED SOLIDS	40000.0
377	ASB	BKG	12687	TOTAL DISSOLVED SOLIDS	22000.0
378	ASB	BKG	12987	TOTAL DISSOLVED SOLIDS	32000.0

T-Test Data for ASB 1A

OBS	SERIES	WELL	DATE	TESTNAME	VALUE
379	ASB	BKG	20789	TOTAL DISSOLVED SOLIDS	2500.00
380	ASB	BKG	22488	TOTAL DISSOLVED SOLIDS	24000.00
381	ASB	BKG	31289	TOTAL DISSOLVED SOLIDS	23000.00
382	ASB	BKG	40687	TOTAL DISSOLVED SOLIDS	28400.00
383	ASB	BKG	51088	TOTAL DISSOLVED SOLIDS	40000.00
384	ASB	BKG	51188	TOTAL DISSOLVED SOLIDS	26000.00
385	ASB	BKG	80487	TOTAL DISSOLVED SOLIDS	64000.00
386	ASB	BKG	81388	TOTAL DISSOLVED SOLIDS	28000.00
387	ASB	BKG	81488	TOTAL DISSOLVED SOLIDS	31000.00
388	ASB	BKG	102888	TOTAL DISSOLVED SOLIDS	112000.00
389	ASB	BKG	110888	TOTAL DISSOLVED SOLIDS	59000.00
390	ASB	BKG	121787	TOTAL DISSOLVED SOLIDS	9000.00
391	ASB	BKG	121987	TOTAL DISSOLVED SOLIDS	52000.00
392	ASB	1A	12087	TOTAL ORGANIC HALOGENS	5.00
393	ASB	1A	12688	TOTAL ORGANIC HALOGENS	2.50
394	ASB	1A	21286	TOTAL ORGANIC HALOGENS	6.00
395	ASB	1A	22585	TOTAL ORGANIC HALOGENS	2.50
396	ASB	1A	32689	TOTAL ORGANIC HALOGENS	2.50
397	ASB	1A	42385	TOTAL ORGANIC HALOGENS	8.00
398	ASB	1A	70788	TOTAL ORGANIC HALOGENS	22.00
399	ASB	1A	80287	TOTAL ORGANIC HALOGENS	8.00
400	ASB	1A	80586	TOTAL ORGANIC HALOGENS	7.00
401	ASB	1A	81385	TOTAL ORGANIC HALOGENS	13.00
402	ASB	1A	101286	TOTAL ORGANIC HALOGENS	5.00
403	ASB	1A	102985	TOTAL ORGANIC HALOGENS	11.00
404	ASB	BKG	12687	TOTAL PHOSPHATES	30.00
405	ASB	BKG	12987	TOTAL PHOSPHATES	40.00
406	ASB	BKG	20789	TOTAL PHOSPHATES	10.00
407	ASB	BKG	31289	TOTAL PHOSPHATES	13.67
408	ASB	BKG	40687	TOTAL PHOSPHATES	10.00
409	ASB	BKG	51088	TOTAL PHOSPHATES	30.00
410	ASB	BKG	51188	TOTAL PHOSPHATES	40.00
411	ASB	BKG	61886	TOTAL PHOSPHATES	9.50
412	ASB	BKG	72286	TOTAL PHOSPHATES	39.00
413	ASB	BKG	72386	TOTAL PHOSPHATES	42.00
414	ASB	BKG	80487	TOTAL PHOSPHATES	15.00
415	ASB	BKG	81388	TOTAL PHOSPHATES	10.00
416	ASB	BKG	81488	TOTAL PHOSPHATES	10.00
417	ASB	BKG	102888	TOTAL PHOSPHATES	10.00
418	ASB	BKG	110286	TOTAL PHOSPHATES	39.50
419	ASB	BKG	110386	TOTAL PHOSPHATES	37.00
420	ASB	BKG	110888	TOTAL PHOSPHATES	60.00
421	ASB	BKG	121787	TOTAL PHOSPHATES	70.00
422	ASB	BKG	121987	TOTAL PHOSPHATES	100.00
423	ASB	1A	12087	TOTAL RADIUM	3.00
424	ASB	1A	12688	TOTAL RADIUM	3.00
425	ASB	1A	21286	TOTAL RADIUM	4.00
426	ASB	1A	22585	TOTAL RADIUM	2.00
427	ASB	1A	32689	TOTAL RADIUM	2.00
428	ASB	1A	70788	TOTAL RADIUM	2.00
429	ASB	1A	80287	TOTAL RADIUM	5.00
430	ASB	1A	80586	TOTAL RADIUM	3.00
431	ASB	1A	81584	TOTAL RADIUM	4.00
432	ASB	1A	112884	TOTAL RADIUM	2.00

T-Test Data for ASB 1A

OBS	SERIES	WELL	DATE	TESTNAME	VALUE
433	ASB	BKG	12687	TOTAL RADIUM	7.0000
434	ASB	BKG	12987	TOTAL RADIUM	0.5000
435	ASB	BKG	20789	TOTAL RADIUM	1.0000
436	ASB	BKG	22488	TOTAL RADIUM	4.8333
437	ASB	BKG	31289	TOTAL RADIUM	12.0000
438	ASB	BKG	40687	TOTAL RADIUM	4.2500
439	ASB	BKG	51088	TOTAL RADIUM	6.0000
440	ASB	BKG	51188	TOTAL RADIUM	0.5000
441	ASB	BKG	61886	TOTAL RADIUM	4.5000
442	ASB	BKG	72286	TOTAL RADIUM	1.0000
443	ASB	BKG	72386	TOTAL RADIUM	9.0000
444	ASB	BKG	80487	TOTAL RADIUM	3.5000
445	ASB	BKG	81388	TOTAL RADIUM	1.0000
446	ASB	BKG	81488	TOTAL RADIUM	7.0000
447	ASB	BKG	102888	TOTAL RADIUM	0.5000
448	ASB	BKG	110286	TOTAL RADIUM	0.5000
449	ASB	BKG	110386	TOTAL RADIUM	7.5000
450	ASB	BKG	110888	TOTAL RADIUM	6.0000
451	ASB	BKG	121787	TOTAL RADIUM	6.0000
452	ASB	BKG	121987	TOTAL RADIUM	0.0000
453	ASB	BKG	40687	TURBIDITY	0.0000
454	ASB	BKG	61886	TURBIDITY	0.6667
455	ASB	BKG	80487	TURBIDITY	0.5000
456	ASB	BKG	121787	TURBIDITY	0.0000
457	ASB	BKG	121987	TURBIDITY	0.0000
458	ASB	1A	12087	ZINC	15.0000
459	ASB	1A	41886	ZINC	1.0000
460	ASB	1A	81584	ZINC	55.0000
461	ASB	1A	112884	ZINC	11.0000
462	ASB	BKG	12687	ZINC	7.0000
463	ASB	BKG	12987	ZINC	8.6667
464	ASB	BKG	20789	ZINC	17.0000
465	ASB	BKG	31289	ZINC	11.0000
466	ASB	BKG	51088	ZINC	6.0000
467	ASB	BKG	51188	ZINC	11.0000
468	ASB	BKG	61886	ZINC	9.7500
469	ASB	BKG	72286	ZINC	15.5000
470	ASB	BKG	72386	ZINC	2.0000
471	ASB	BKG	80487	ZINC	46.5000
472	ASB	BKG	81388	ZINC	49.0000
473	ASB	BKG	81488	ZINC	24.0000
474	ASB	BKG	102888	ZINC	44.0000
475	ASB	BKG	110286	ZINC	8.0000
476	ASB	BKG	110386	ZINC	11.3333
477	ASB	BKG	110888	ZINC	12.0000
478	ASB	BKG	121787	ZINC	54.0000
479	ASB	BKG	121987	ZINC	17.0000

This Page Intentionally Left Blank.

Statistical Comparison Results

This Page Intentionally Left Blank.

TTEST PROCEDURE

********** TESTNAME=BARIUM **********

Variable: VALUE

WELL	N	Mean	Std Dev	Std Error	Minimum	Maximum
1A	6	9.00000000	2.44948974	1.00000000	6.00000000	12.00000000
BKG	19	5.78070175	3.06365222	0.70285002	2.00000000	14.00000000

Variances	T	Method	DF	Prob>|T|
Unequal	2.6338	Satterthwaite	10.5	0.0242
		Cochran	.	0.0370
Equal	2.3374		23.0	0.0285

For H0: Variances are equal, F' = 1.56 DF = (18,5) Prob>F' = 0.6545

********** TESTNAME=CHLORIDE **********

Variable: VALUE

WELL	N	Mean	Std Dev	Std Error	Minimum	Maximum
1A	8	6390.000000	1112.821382	393.4417728	5200.000000	8100.000000
BKG	18	2553.148148	535.242260	126.1578107	2000.000000	4166.666667

Variances	T	Method	DF	Prob>|T|
Unequal	9.2863	Satterthwaite	8.5	0.0001
		Cochran	.	0.0001
Equal	12.0222		24.0	0.0000

For H0: Variances are equal, F' = 4.32 DF = (7,17) Prob>F' = 0.0129

********** TESTNAME=COPPER **********

Variable: VALUE

WELL	N	Mean	Std Dev	Std Error	Minimum	Maximum
1A	4	7.75000000	8.01560977	4.00780489	2.00000000	19.00000000
BKG	19	6.78947368	3.76871548	0.86460263	2.00000000	15.00000000

Variances	T	Method	DF	Prob>|T|
Unequal	0.2343	Satterthwaite	3.3	0.8288
		Cochran	.	0.8293
Equal	0.3779		21.0	0.7093

For H0: Variances are equal, F' = 4.52 DF = (3,18) Prob>F' = 0.0313

********** TESTNAME=GROSS ALPHA **********

Variable: VALUE

WELL	N	Mean	Std Dev	Std Error	Minimum	Maximum
1A	10	5.00000000	3.30823887	1.04615699	1.00000000	10.00000000
BKG	14	7.35714286	7.53562965	2.01398174	1.00000000	23.75000000

Variances	T	Method	DF	Prob>|T|
Unequal	-1.0386	Satterthwaite	19.0	0.3120
		Cochran	.	0.3197
Equal	-0.9231		22.0	0.3659

For H0: Variances are equal, F' = 5.19 DF = (13,9) Prob>F' = 0.0183

********** TESTNAME=IRON **********

Variable: VALUE

WELL	N	Mean	Std Dev	Std Error	Minimum	Maximum
1A	9	27.83333333	37.38816658	12.46272219	2.00000000	123.0000000
BKG	10	36.35000000	15.21420105	4.81115281	19.50000000	76.5000000

Variances	T	Method	DF	Prob>|T|
Unequal	-0.6375	Satterthwaite	10.4	0.5377
		Cochran	.	0.5413
Equal	-0.6635		17.0	0.5159

For H0: Variances are equal, F' = 6.04 DF = (8,9) Prob>F' = 0.0143

********** TESTNAME=MANGANESE **********

Variable: VALUE

WELL	N	Mean	Std Dev	Std Error	Minimum	Maximum
1A	10	73.50000000	37.05626353	11.71821943	20.00000000	130.0000000
BKG	14	12.05952381	7.11703360	1.90210724	3.00000000	24.5000000

Variances	T	Method	DF	Prob>|T|
Unequal	5.1754	Satterthwaite	9.5	0.0005
		Cochran	.	0.0006
Equal	6.1006		22.0	0.0000

For H0: Variances are equal, F' = 27.11 DF = (9,13) Prob>F' = 0.0000

********** TESTNAME=NITRATE AS NITROGEN **********

Variable: VALUE

WELL	N	Mean	Std Dev	Std Error	Minimum	Maximum
1A	6	221.000000	57.1839138	23.3452351	120.0000000	270.000000
BKG	20	1647.566667	538.2189613	120.3494184	880.0000000	3040.000000

Variances	T	Method	DF	Prob>|T|
Unequal	-11.6366	Satterthwaite	20.3	0.0001
		Cochran	.	0.0001
Equal	-6.3903		24.0	0.0000

For H0: Variances are equal, F' = 88.59 DF = (19,5) Prob>F' = 0.0000

********** TESTNAME=NONVOLATILE BETA **********

Variable: VALUE

WELL	N	Mean	Std Dev	Std Error	Minimum	Maximum
1A	8	4.37500000	1.74744712	0.61781585	1.50000000	7.00000000
BKG	14	5.06547619	4.36284068	1.16601822	1.00000000	14.25000000

Variances	T	Method	DF	Prob>|T|
Unequal	-0.5233	Satterthwaite	18.6	0.6070
		Cochran	.	0.6112
Equal	-0.4249		20.0	0.6754

For H0: Variances are equal, F' = 6.23 DF = (13,7) Prob>F' = 0.0217

********** TESTNAME=PH **********

Variable: VALUE

WELL	N	Mean	Std Dev	Std Error	Minimum	Maximum
1A	21	5.00000000	0.63245553	0.13801311	4.00000000	6.00000000
BKG	22	4.65909091	0.47274184	0.10078890	4.00000000	5.00000000

Variances	T	Method	DF	Prob>|T|
Unequal	1.9948	Satterthwaite	37.0	0.0535
		Cochran	.	0.0596
Equal	2.0083		41.0	0.0512

For H0: Variances are equal, F' = 1.79 DF = (20,21) Prob>F' = 0.1939

********** TESTNAME=SODIUM **********

Variable: VALUE

WELL	N	Mean	Std Dev	Std Error	Minimum	Maximum
1A	13	3166.923077	1850.267479	513.1718668	2010.000000	8600.000000
BKG	20	2689.750000	939.937673	210.1764531	1630.000000	4475.000000

Variances	T	Method	DF	Prob>|T|
Unequal	0.8605	Satterthwaite	16.1	0.4022
		Cochran	.	0.4055
Equal	0.9803		31.0	0.3345

For H0: Variances are equal, F' = 3.87 DF = (12,19) Prob>F' = 0.0085

********** TESTNAME=SPECIFIC CONDUCTANCE **********

Variable: VALUE

WELL	N	Mean	Std Dev	Std Error	Minimum	Maximum
1A	21	47.95238095	9.14043867	1.99460724	35.00000000	75.00000000
BKG	22	30.34090909	6.32340016	1.34815344	19.00000000	43.00000000

Variances	T	Method	DF	Prob>|T|
Unequal	7.3153	Satterthwaite	35.4	0.0001
		Cochran	.	0.0001
Equal	7.3770		41.0	0.0000

For H0: Variances are equal, F' = 2.09 DF = (20,21) Prob>F' = 0.1014

********** TESTNAME=TOTAL DISSOLVED SOLIDS **********

Variable: VALUE

WELL	N	Mean	Std Dev	Std Error	Minimum	Maximum
1A	4	29750.00000	13720.42273	6860.211367	16000.00000	43000.0000
BKG	15	36860.00000	26689.90713	6891.304390	2500.00000	112000.0000

Variances	T	Method	DF	Prob>|T|
Unequal	-0.7312	Satterthwaite	9.9	0.4816
		Cochran	.	0.4985
Equal	-0.5075		17.0	0.6183

For H0: Variances are equal, F' = 3.78 DF = (14,3) Prob>F' = 0.3000

********** TESTNAME=TOTAL RADIUM **********

Variable: VALUE

WELL	N	Mean	Std Dev	Std Error	Minimum	Maximum
1A	10	3.00000000	1.05409255	0.33333333	2.00000000	5.00000000
BKG	20	4.12916667	3.43490798	0.76806877	0.00000000	12.00000000

Variances	T	Method	DF	Prob>|T|
Unequal	-1.3486	Satterthwaite	25.0	0.1896
		Cochran	.	0.1962
Equal	-1.0081		28.0	0.3220

For H0: Variances are equal, F' = 10.62 DF = (19,9) Prob>F' = 0.0010

********** TESTNAME=ZINC **********

Variable: VALUE

WELL	N	Mean	Std Dev	Std Error	Minimum	Maximum
1A	4	20.50000000	23.74166520	11.87083260	1.00000000	55.00000000
BKG	18	19.65277778	16.61846584	3.91700996	2.00000000	54.00000000

Variances	T	Method	DF	Prob>|T|
Unequal	0.0678	Satterthwaite	3.7	0.9495
		Cochran	.	0.9499
Equal	0.0858		20.0	0.9325

For H0: Variances are equal, F' = 2.04 DF = (3,17) Prob>F' = 0.2925

Groundwater Monitoring Well

ASB 2A

This Page Intentionally Left Blank.

Raw Data

This Page Intentionally Left Blank.

Raw Data for ASB 2A

ASB	2A	032384	SPECIFIC CONDUCTANCE		49.0000	UMHC	FD
ASB	2A	032384	PH		5.4000	PH	FD
ASB	2A	041184	SPECIFIC CONDUCTANCE		44.0000	UMHC	FD
ASB	2A	041184	PH		5.5000	PH	FD
ASB	2A	081484	SILVER	LT	2.0000	UGL	EE
ASB	2A	081484	GROSS ALPHA		4.0000	PCL	CP
ASB	2A	081484	ARSENIC	LT	1.0000	UGL	EE
ASB	2A	081484	BARIUM		18.0000	UGL	EE
ASB	2A	081484	BERYLLIUM	LT	2.0000	UGL	EE
ASB	2A	081484	NONVOLATILE BETA	LT	3.0000	PCL	CP
ASB	2A	081484	CADMIUM	LT	2.0000	UGL	EE
ASB	2A	081484	CHLORIDE		8060.0000	UGL	EE
ASB	2A	081484	CHLORIDE		7520.0000	UGL	EE
ASB	2A	081484	COLOR		0.0000	APC	EE
ASB	2A	081484	COLOR		0.0000	APC	EE
ASB	2A	081484	SPECIFIC CONDUCTANCE		58.0000	UMHC	FD
ASB	2A	081484	SPECIFIC CONDUCTANCE		39.6000	UMHC	EE
ASB	2A	081484	CHROMIUM	LT	4.0000	UGL	EE
ASB	2A	081484	COPPER	LT	4.0000	UGL	EE
ASB	2A	081484	CYANIDE	LT	5.0000	UGL	EE
ASB	2A	081484	DISSOLVED ORGANIC CARBON	LT	5000.0000	UGL	EE
ASB	2A	081484	FLUORIDE		130.0000	UGL	EE
ASB	2A	081484	IRON		36.0000	UGL	EE
ASB	2A	081484	GC SCAN	LT	40.0000	UGL	EE
ASB	2A	081484	GC SCAN	LT	40.0000	UGL	EE
ASB	2A	081484	MERCURY	LT	0.2000	UGL	EE
ASB	2A	081484	MANGANESE		74.0000	UGL	EE
ASB	2A	081484	SODIUM		2930.0000	UGL	EE
ASB	2A	081484	NICKEL	LT	4.0000	UGL	EE
ASB	2A	081484	NITRITE AS NITROGEN	LT	500.0000	UGL	EE
ASB	2A	081484	NITRATE AS NITROGEN	LT	500.0000	UGL	EE
ASB	2A	081484	ODOR		0.0000	THON	EE
ASB	2A	081484	LEAD		9.0000	UGL	EE
ASB	2A	081484	PH		4.9000	PH	FD
ASB	2A	081484	PHENOLS		5.0000	UGL	EE
ASB	2A	081484	SELENIUM	LT	1.0000	UGL	EE
ASB	2A	081484	SILVEX	LT	2.0000	UGL	EE
ASB	2A	081484	SULFATE		11000.0000	UGL	EE
ASB	2A	081484	SULFIDE	LT	1000.0000	UGL	EE
ASB	2A	081484	SURFACTANTS	LT	10.0000	UGL	EE
ASB	2A	081484	TOTAL DISSOLVED SOLIDS		30000.0000	UGL	EE
ASB	2A	081484	TOTAL ORGANIC CARBON	LT	5000.0000	UGL	EE
ASB	2A	081484	TOTAL RADIUM		5.0000	PCL	CP
ASB	2A	081484	TOTAL ORGANIC HALOGENS		9.0000	UGL	MM
ASB	2A	081484	TURBIDITY	LT	1.0000	TU	EE
ASB	2A	081484	TURBIDITY	LT	1.0000	TU	EE
ASB	2A	081484	2,4-DICHLOROPHENOXYACETIC ACID	LT	20.0000	UGL	EE
ASB	2A	081484	ZINC		11.0000	UGL	EE
ASB	2A	102284	SILVER	LT	2.0000	UGL	EE
ASB	2A	102284	GROSS ALPHA		5.0000	PCL	CP
ASB	2A	102284	ARSENIC	LT	1.0000	UGL	EE
ASB	2A	102284	BARIUM		18.0000	UGL	EE
ASB	2A	102284	BERYLLIUM	LT	2.0000	UGL	EE
ASB	2A	102284	NONVOLATILE BETA		4.0000	PCL	CP
ASB	2A	102284	CADMIUM	LT	2.0000	UGL	EE
ASB	2A	102284	CHLORIDE		6500.0000	UGL	EE
ASB	2A	102284	COLOR		0.0000	APC	EE
ASB	2A	102284	SPECIFIC CONDUCTANCE		80.0000	UMHC	FD
ASB	2A	102284	CORROSIVITY		0.0043	MMY	EE
ASB	2A	102284	CHROMIUM	LT	4.0000	UGL	EE
ASB	2A	102284	COPPER		8.0000	UGL	EE
ASB	2A	102284	CYANIDE	LT	5.0000	UGL	EE
ASB	2A	102284	DISSOLVED ORGANIC CARBON	LT	5000.0000	UGL	EE
ASB	2A	102284	ENDRIN	LT	0.0400	UGL	EE

Raw Data for ASB 2A

ASB	2A	102284	FLUORIDE	LT	100.0000	UGL	EE
ASB	2A	102284	IRON		38.0000	UGL	EE
ASB	2A	102284	GC SCAN	LT	40.0000	UGL	EE
ASB	2A	102284	MERCURY	LT	0.2000	UGL	EE
ASB	2A	102284	LINDANE	LT	1.0000	UGL	EE
ASB	2A	102284	METHOXYCHLOR	LT	20.0000	UGL	EE
ASB	2A	102284	MANGANESE		68.0000	UGL	EE
ASB	2A	102284	SODIUM		3100.0000	UGL	EE
ASB	2A	102284	NICKEL	LT	4.0000	UGL	EE
ASB	2A	102284	NITRITE AS NITROGEN	LT	500.0000	UGL	EE
ASB	2A	102284	NITRATE AS NITROGEN	LT	500.0000	UGL	EE
ASB	2A	102284	ODOR		0.0000	THON	EE
ASB	2A	102284	LEAD		26.0000	UGL	EE
ASB	2A	102284	PH		4.8000	PH	FD
ASB	2A	102284	PHENOLS	LT	2.0000	UGL	EE
ASB	2A	102284	SELENIUM	LT	1.0000	UGL	EE
ASB	2A	102284	SILVEX	LT	2.0000	UGL	EE
ASB	2A	102284	SULFATE	LT	5000.0000	UGL	EE
ASB	2A	102284	SULFIDE	LT	1000.0000	UGL	EE
ASB	2A	102284	SURFACTANTS		10.0000	UGL	EE
ASB	2A	102284	TOTAL DISSOLVED SOLIDS		22000.0000	UGL	EE
ASB	2A	102284	TOTAL ORGANIC CARBON		10700.0000	UGL	EE
ASB	2A	102284	TOTAL ORGANIC CARBON		12200.0000	UGL	EE
ASB	2A	102284	TOTAL RADIUM		4.0000	PCL	CP
ASB	2A	102284	TOTAL ORGANIC HALOGENS		8.0000	UGL	MM
ASB	2A	102284	TURBIDITY		0.1100	TU	EE
ASB	2A	102284	TOXAPHENE	LT	1.0000	UGL	EE
ASB	2A	102284	2,4-DICHLOROPHENOXYACETIC ACID	LT	20.0000	UGL	EE
ASB	2A	102284	ZINC		129.0000	UGL	EE
ASB	2A	022585	SILVER	LT	2.0000	UGL	EE
ASB	2A	022585	SILVER	LT	2.0000	UGL	EE
ASB	2A	022585	GROSS ALPHA		9.0000	PCL	CP
ASB	2A	022585	ARSENIC	LT	1.0000	UGL	EE
ASB	2A	022585	ARSENIC	LT	1.0000	UGL	EE
ASB	2A	022585	BARIUM		17.0000	UGL	EE
ASB	2A	022585	BARIUM		17.0000	UGL	EE
ASB	2A	022585	NONVOLATILE BETA		5.0000	PCL	CP
ASB	2A	022585	CADMIUM	LT	2.0000	UGL	EE
ASB	2A	022585	CADMIUM	LT	2.0000	UGL	EE
ASB	2A	022585	CHLORIDE		6310.0000	UGL	EE
ASB	2A	022585	CHLORIDE		6310.0000	UGL	EE
ASB	2A	022585	SPECIFIC CONDUCTANCE		69.0000	UMHC	FD
ASB	2A	022585	CHROMIUM	LT	4.0000	UGL	EE
ASB	2A	022585	CHROMIUM	LT	4.0000	UGL	EE
ASB	2A	022585	ENDRIN	LT	0.0400	UGL	EE
ASB	2A	022585	ENDRIN	LT	0.0400	UGL	EE
ASB	2A	022585	FLUORIDE	LT	100.0000	UGL	EE
ASB	2A	022585	IRON		68.0000	UGL	EE
ASB	2A	022585	IRON	LT	4.0000	UGL	EE
ASB	2A	022585	MERCURY		0.2900	UGL	EE
ASB	2A	022585	LINDANE	LT	1.0000	UGL	EE
ASB	2A	022585	LINDANE	LT	1.0000	UGL	EE
ASB	2A	022585	METHOXYCHLOR	LT	20.0000	UGL	EE
ASB	2A	022585	METHOXYCHLOR	LT	20.0000	UGL	EE
ASB	2A	022585	MANGANESE		46.0000	UGL	EE
ASB	2A	022585	MANGANESE		45.0000	UGL	EE
ASB	2A	022585	SODIUM		3260.0000	UGL	EE
ASB	2A	022585	SODIUM		3450.0000	UGL	EE
ASB	2A	022585	NITRATE AS NITROGEN		600.0000	UGL	EE
ASB	2A	022585	LEAD		14.0000	UGL	EE
ASB	2A	022585	LEAD	LT	4.0000	UGL	EE
ASB	2A	022585	PH		4.6000	PH	FD
ASB	2A	022585	PHENOLS	LT	2.0000	UGL	EE
ASB	2A	022585	SELENIUM	LT	1.0000	UGL	EE

Raw Data for ASB 2A

ASB	2A	022585	SELENIUM	LT	1.0000	UGL	EE
ASB	2A	022585	SILVEX	LT	2.0000	UGL	EE
ASB	2A	022585	SULFATE	LT	5000.0000	UGL	EE
ASB	2A	022585	TOTAL ORGANIC CARBON		354.0000	UGL	EE
ASB	2A	022585	TOTAL RADIUM		5.0000	PCL	CP
ASB	2A	022585	TOTAL ORGANIC HALOGENS	LT	5.0000	UGL	EE
ASB	2A	022585	TURBIDITY		2.2000	TU	EE
ASB	2A	022585	TOXAPHENE	LT	1.0000	UGL	EE
ASB	2A	022585	TOXAPHENE	LT	1.0000	UGL	EE
ASB	2A	022585	2,4-DICHLOROPHENOXYACETIC ACID	LT	20.0000	UGL	EE
ASB	2A	042385	SPECIFIC CONDUCTANCE		48.0000	UMHC	FD
ASB	2A	042385	CHROMIUM	LT	4.0000	UGL	EE
ASB	2A	042385	MERCURY	LT	0.2000	UGL	EE
ASB	2A	042385	SODIUM		3136.0000	UGL	EE
ASB	2A	042385	LEAD		11.0000	UGL	EE
ASB	2A	042385	PH		5.1000	PH	FD
ASB	2A	042385	TOTAL ORGANIC CARBON		485.0000	UGL	EE
ASB	2A	042385	TOTAL ORGANIC HALOGENS	LT	5.0000	UGL	EE
ASB	2A	081385	SPECIFIC CONDUCTANCE		50.0000	UMHC	FD
ASB	2A	081385	CHROMIUM	LT	4.0000	UGL	EE
ASB	2A	081385	MERCURY	LT	0.2000	UGL	EE
ASB	2A	081385	SODIUM		2470.0000	UGL	EE
ASB	2A	081385	LEAD	LT	10.0000	UGL	EE
ASB	2A	081385	PH		4.9000	PH	FD
ASB	2A	081385	TOTAL ORGANIC CARBON		2080.0000	UGL	EE
ASB	2A	081385	TOTAL ORGANIC HALOGENS		13.0000	UGL	EE
ASB	2A	102985	SPECIFIC CONDUCTANCE		38.0000	UMHC	FD
ASB	2A	102985	CHROMIUM	LT	4.0000	UGL	EE
ASB	2A	102985	MERCURY	LT	0.2000	UGL	EE
ASB	2A	102985	SODIUM		4000.0000	UGL	EE
ASB	2A	102985	LEAD		6.0000	UGL	EE
ASB	2A	102985	PH		4.3000	PH	FD
ASB	2A	102985	TOTAL ORGANIC CARBON		300.0000	UGL	EE
ASB	2A	102985	TOTAL ORGANIC HALOGENS		10.0000	UGL	EE
ASB	2A	102985	TOTAL ORGANIC HALOGENS		9.0000	UGL	EE
ASB	2A	021286	GROSS ALPHA		20.0000	PCL	CP
ASB	2A	021286	NONVOLATILE BETA		20.0000	PCL	CP
ASB	2A	021286	CHLORIDE		6400.0000	UGL	EE
ASB	2A	021286	SPECIFIC CONDUCTANCE		39.0000	UMHC	FD
ASB	2A	021286	IRON		34.0000	UGL	EE
ASB	2A	021286	MERCURY	LT	0.2000	UGL	EE
ASB	2A	021286	MANGANESE		48.0000	UGL	EE
ASB	2A	021286	SODIUM		2790.0000	UGL	EE
ASB	2A	021286	PH		4.1000	PH	FD
ASB	2A	021286	PHENOLS	LT	2.0000	UGL	EE
ASB	2A	021286	SULFATE		8000.0000	UGL	EE
ASB	2A	021286	TOTAL ORGANIC CARBON	LT	1000.0000	UGL	EE
ASB	2A	021286	TOTAL RADIUM		6.0000	PCL	CP
ASB	2A	021286	TOTAL ORGANIC HALOGENS		6.0000	UGL	EE
ASB	2A	041886	SPECIFIC CONDUCTANCE		42.0000	UMHC	FD
ASB	2A	041886	CHROMIUM	LT	4.0000	UGL	EE
ASB	2A	041886	CHROMIUM	LT	4.0000	UGL	EE
ASB	2A	041886	NICKEL	LT	4.0000	UGL	EE
ASB	2A	041886	NICKEL	LT	4.0000	UGL	EE
ASB	2A	041886	LEAD		14.0000	UGL	EE
ASB	2A	041886	LEAD		16.0000	UGL	EE
ASB	2A	041886	PH		4.7000	PH	FD
ASB	2A	041886	ZINC	LT	2.0000	UGL	EE
ASB	2A	041886	ZINC	LT	2.0000	UGL	EE
ASB	2A	080586	GROSS ALPHA		7.4000	PCL	RM
ASB	2A	080586	GROSS ALPHA		4.4000	PCL	RM
ASB	2A	080586	SPECIFIC CONDUCTANCE		56.0000	UMHC	FD
ASB	2A	080586	CHROMIUM	LT	4.0000	UGL	EE
ASB	2A	080586	CHROMIUM	LT	4.0000	UGL	EE

Raw Data for ASB 2A

ASB	2A	080586	MANGANESE		53.0000	UGL	EE
ASB	2A	080586	MANGANESE		50.0000	UGL	EE
ASB	2A	080586	LEAD		20.0000	UGL	EE
ASB	2A	080586	LEAD		19.0000	UGL	EE
ASB	2A	080586	PH		4.6000	PH	FD
ASB	2A	080586	TOTAL ORGANIC CARBON	LT	1000.0000	UGL	EE
ASB	2A	080586	TOTAL RADIUM		4.3000	PCL	RM
ASB	2A	080586	TOTAL RADIUM		5.2000	PCL	RM
ASB	2A	080586	TOTAL ORGANIC HALOGENS		5.0000	UGL	EE
ASB	2A	080586	TOTAL ORGANIC HALOGENS		6.0000	UGL	EE
ASB	2A	101286	BROMODICHLOROMETHANE	LT	5.0000	UGL	EE
ASB	2A	101286	TRICHLOROFLUOROMETHANE	LT	5.0000	UGL	EE
ASB	2A	101286	CARBON TETRACHLORIDE	LT	5.0000	UGL	EE
ASB	2A	101286	BROMOFORM	LT	10.0000	UGL	EE
ASB	2A	101286	CHLOROFORM	LT	5.0000	UGL	EE
ASB	2A	101286	BROMOMETHANE	LT	10.0000	UGL	EE
ASB	2A	101286	CHLOROMETHANE	LT	10.0000	UGL	EE
ASB	2A	101286	CHLOROBENZENE	LT	5.0000	UGL	EE
ASB	2A	101286	SPECIFIC CONDUCTANCE		52.0000	UMHC	FD
ASB	2A	101286	CHROMIUM	LT	4.0000	UGL	EE
ASB	2A	101286	CHLOROETHENE	LT	10.0000	UGL	EE
ASB	2A	101286	CHLOROETHANE	LT	10.0000	UGL	EE
ASB	2A	101286	BENZENE	LT	5.0000	UGL	EE
ASB	2A	101286	DIBROMOCHLOROMETHANE	LT	5.0000	UGL	EE
ASB	2A	101286	ETHYLBENZENE	LT	5.0000	UGL	EE
ASB	2A	101286	TOLUENE-D8		101.0000	PER	EE
ASB	2A	101286	TOLUENE	LT	5.0000	UGL	EE
ASB	2A	101286	SODIUM		2790.0000	UGL	EE
ASB	2A	101286	P-BROMOFLUOROBENZENE		99.0000	PER	EE
ASB	2A	101286	PH		4.5000	PH	FD
ASB	2A	101286	1,1,2,2-TETRACHLOROETHANE	LT	10.0000	UGL	EE
ASB	2A	101286	TETRACHLOROETHYLENE	LT	5.0000	UGL	EE
ASB	2A	101286	TOTAL ORGANIC HALOGENS	LT	5.0000	UGL	EE
ASB	2A	101286	TRICHLOROETHYLENE	LT	5.0000	UGL	EE
ASB	2A	101286	TRANS-1,2-DICHLOROETHENE	LT	5.0000	UGL	EE
ASB	2A	101286	1,1-DICHLOROETHYLENE	LT	5.0000	UGL	EE
ASB	2A	101286	1,1-DICHLOROETHANE	LT	5.0000	UGL	EE
ASB	2A	101286	1,1,1-TRICHLOROETHANE	LT	5.0000	UGL	EE
ASB	2A	101286	1,1,2-TRICHLOROETHANE	LT	5.0000	UGL	EE
ASB	2A	101286	1,2-DICHLOROETHANE-D4		94.0000	PER	EE
ASB	2A	101286	1,2-DICHLOROETHANE	LT	1.0000	UGL	EE
ASB	2A	101286	1,2-DICHLOROPROPANE	LT	10.0000	UGL	EE
ASB	2A	101286	CIS-1,3-DICHLOROPROPENE	LT	5.0000	UGL	EE
ASB	2A	101286	TRANS-1,3-DICHLOROPROPENE	LT	5.0000	UGL	EE
ASB	2A	101286	2-CHLOROETHYLVINYL ETHER	LT	10.0000	UGL	EE
ASB	2A	012087	SILVER	LT	2.0000	UGL	EE
ASB	2A	012087	GROSS ALPHA		3.5000	PCL	RM
ASB	2A	012087	ARSENIC	LT	2.0000	UGL	EE
ASB	2A	012087	BARIUM		14.0000	UGL	EE
ASB	2A	012087	NONVOLATILE BETA		2.8000	PCL	RM
ASB	2A	012087	CALCIUM		4150.0000	UGL	EE
ASB	2A	012087	CARBON TETRACHLORIDE	LT	1.0000	UGL	EE
ASB	2A	012087	CADMIUM		2.0000	UGL	EE
ASB	2A	012087	CHLOROFORM	LT	1.0000	UGL	EE
ASB	2A	012087	CHLORIDE		6200.0000	UGL	EE
ASB	2A	012087	SPECIFIC CONDUCTANCE		61.0000	UMHC	FD
ASB	2A	012087	CHROMIUM	LT	4.0000	UGL	EE
ASB	2A	012087	COPPER		6.0000	UGL	EE
ASB	2A	012087	FLUORIDE		130.0000	UGL	EE
ASB	2A	012087	IRON		44.0000	UGL	EE
ASB	2A	012087	MERCURY	LT	0.2000	UGL	EE
ASB	2A	012087	POTASSIUM		410.0000	UGL	EE
ASB	2A	012087	MAGNESIUM		727.0000	UGL	EE
ASB	2A	012087	MANGANESE		42.0000	UGL	EE

Raw Data for ASB 2A

ASB	2A	012087	SODIUM		2790.0000	UGL	EE
ASB	2A	012087	NICKEL	LT	4.0000	UGL	EE
ASB	2A	012087	NITRATE AS NITROGEN		170.0000	UGL	EE
ASB	2A	012087	LEAD	LT	6.0000	UGL	EE
ASB	2A	012087	PH		4.1000	PH	FD
ASB	2A	012087	PHENOLS	LT	2.0000	UGL	EE
ASB	2A	012087	SELENIUM	LT	2.0000	UGL	EE
ASB	2A	012087	SILICA		1550.0000	UGL	EE
ASB	2A	012087	SULFATE		6000.0000	UGL	EE
ASB	2A	012087	TETRACHLOROETHYLENE	LT	1.0000	UGL	EE
ASB	2A	012087	TOTAL DISSOLVED SOLIDS		18000.0000	UGL	EE
ASB	2A	012087	TOTAL ORGANIC CARBON		2000.0000	UGL	EE
ASB	2A	012087	TOTAL RADIUM		5.2000	PCL	RM
ASB	2A	012087	TOTAL ORGANIC HALOGENS	LT	5.0000	UGL	EE
ASB	2A	012087	TOTAL PHOSPHATES		30.0000	UGL	EE
ASB	2A	012087	TRICHLOROETHYLENE	LT	1.0000	UGL	EE
ASB	2A	012087	TRITIUM		1.6300	PCML	RM
ASB	2A	012087	1,1,1-TRICHLOROETHANE	LT	1.0000	UGL	EE
ASB	2A	012087	ZINC		42.0000	UGL	EE
ASB	2A	042587	CARBON TETRACHLORIDE	LT	1.0000	UGL	EE
ASB	2A	042587	CHLOROFORM	LT	1.0000	UGL	EE
ASB	2A	042587	SPECIFIC CONDUCTANCE		55.0000	UMHC	FD
ASB	2A	042587	PH		4.9000	PH	FD
ASB	2A	042587	TETRACHLOROETHYLENE		1.0000	UGL	EE
ASB	2A	042587	TRICHLOROETHYLENE	LT	1.0000	UGL	EE
ASB	2A	042587	1,1,1-TRICHLOROETHANE	LT	1.0000	UGL	EE
ASB	2A	080287	GROSS ALPHA		2.4000	PCL	RM
ASB	2A	080287	CARBON TETRACHLORIDE	LT	1.0000	UGL	EE
ASB	2A	080287	CARBON TETRACHLORIDE	LT	1.0000	UGL	EE
ASB	2A	080287	CHLOROFORM	LT	1.0000	UGL	EE
ASB	2A	080287	CHLOROFORM	LT	1.0000	UGL	EE
ASB	2A	080287	SPECIFIC CONDUCTANCE		58.0000	UMHC	FD
ASB	2A	080287	CHROMIUM	LT	4.0000	UGL	EE
ASB	2A	080287	IRON		60.0000	UGL	EE
ASB	2A	080287	MANGANESE		41.0000	UGL	EE
ASB	2A	080287	SODIUM		3910.0000	UGL	EE
ASB	2A	080287	LEAD		15.0000	UGL	EE
ASB	2A	080287	PH		6.0000	PH	FD
ASB	2A	080287	TETRACHLOROETHYLENE	LT	1.0000	UGL	EE
ASB	2A	080287	TETRACHLOROETHYLENE	LT	1.0000	UGL	EE
ASB	2A	080287	TOTAL ORGANIC CARBON	LT	1000.0000	UGL	EE
ASB	2A	080287	TOTAL RADIUM		4.7000	PCL	RM
ASB	2A	080287	TOTAL ORGANIC HALOGENS	LT	5.0000	UGL	EE
ASB	2A	080287	TRICHLOROETHYLENE	LT	1.0000	UGL	EE
ASB	2A	080287	TRICHLOROETHYLENE	LT	1.0000	UGL	EE
ASB	2A	080287	1,1,1-TRICHLOROETHANE	LT	1.0000	UGL	EE
ASB	2A	080287	1,1,1-TRICHLOROETHANE	LT	1.0000	UGL	EE
ASB	2A	101887	CARBON TETRACHLORIDE	LT	1.0000	UGL	EE
ASB	2A	101887	CARBON TETRACHLORIDE	LT	1.0000	UGL	EE
ASB	2A	101887	CHLOROFORM	LT	1.0000	UGL	EE
ASB	2A	101887	CHLOROFORM	LT	1.0000	UGL	EE
ASB	2A	101887	SPECIFIC CONDUCTANCE		65.0000	UMHC	FD
ASB	2A	101887	PH		5.4000	PH	FD
ASB	2A	101887	TETRACHLOROETHYLENE	LT	1.0000	UGL	EE
ASB	2A	101887	TETRACHLOROETHYLENE	LT	1.0000	UGL	EE
ASB	2A	101887	TRICHLOROETHYLENE	LT	1.0000	UGL	EE
ASB	2A	101887	TRICHLOROETHYLENE	LT	1.0000	UGL	EE
ASB	2A	101887	1,1,1-TRICHLOROETHANE	LT	1.0000	UGL	EE
ASB	2A	101887	1,1,1-TRICHLOROETHANE	LT	1.0000	UGL	EE
ASB	2A	012688	GROSS ALPHA		7.1000	PCL	EE
ASB	2A	012688	NONVOLATILE BETA		5.4000	PCL	EE
ASB	2A	012688	CARBON TETRACHLORIDE	LT	1.0000	UGL	EE
ASB	2A	012688	CARBON TETRACHLORIDE	LT	1.0000	UGL	EE
ASB	2A	012688	CADMIUM	LT	2.0000	UGL	EE

Raw Data for ASB 2A

ASB	2A	012688	CHLOROFORM	LT	1.0000	UGL	EE
ASB	2A	012688	CHLOROFORM	LT	1.0000	UGL	EE
ASB	2A	012688	CHLORIDE		6200.0000	UGL	EE
ASB	2A	012688	SPECIFIC CONDUCTANCE		61.0000	UMHC	FD
ASB	2A	012688	COPPER	LT	4.0000	UGL	EE
ASB	2A	012688	IRON		37.0000	UGL	EE
ASB	2A	012688	MERCURY	LT	0.2000	UGL	EE
ASB	2A	012688	MANGANESE		21.0000	UGL	EE
ASB	2A	012688	SODIUM		7040.0000	UGL	EE
ASB	2A	012688	NICKEL	LT	4.0000	UGL	EE
ASB	2A	012688	LEAD		12.0000	UGL	EE
ASB	2A	012688	PH		5.1000	PH	FD
ASB	2A	012688	SULFATE	LT	5000.0000	UGL	EE
ASB	2A	012688	TETRACHLOROETHYLENE		1.2700	UGL	EE
ASB	2A	012688	TETRACHLOROETHYLENE		1.0200	UGL	EE
ASB	2A	012688	TOTAL ORGANIC CARBON	LT	1000.0000	UGL	EE
ASB	2A	012688	TOTAL RADIUM		3.6000	PCL	EE
ASB	2A	012688	TOTAL ORGANIC HALOGENS	LT	5.0000	UGL	EE
ASB	2A	012688	TRICHLOROETHYLENE	LT	1.0000	UGL	EE
ASB	2A	012688	TRICHLOROETHYLENE	LT	1.0000	UGL	EE
ASB	2A	012688	1,1,1-TRICHLOROETHANE	LT	1.0000	UGL	EE
ASB	2A	012688	1,1,1-TRICHLOROETHANE	LT	1.0000	UGL	EE
ASB	2A	040588	CHLOROFORM	LT	1.0000	UGL	MA
ASB	2A	040588	SPECIFIC CONDUCTANCE		74.0000	UMHC	FD
ASB	2A	040588	PH		5.8000	PH	FD
ASB	2A	040588	TETRACHLOROETHYLENE	LT	1.0000	UGL	MA
ASB	2A	040588	TRICHLOROETHYLENE	LT	1.0000	UGL	MA
ASB	2A	040588	1,1,1-TRICHLOROETHANE	LT	1.0000	UGL	MA
ASB	2A	070788	SILVER	LT	2.0000	UGL	EE
ASB	2A	070788	GROSS ALPHA		3.9700	PCL	EE
ASB	2A	070788	ARSENIC	LT	2.0000	UGL	EE
ASB	2A	070788	BARIUM		12.0000	UGL	EE
ASB	2A	070788	NONVOLATILE BETA		4.1900	PCL	EE
ASB	2A	070788	CALCIUM		2990.0000	UGL	EE
ASB	2A	070788	CARBON TETRACHLORIDE	LT	1.0000	UGL	EE
ASB	2A	070788	CADMIUM	LT	2.0000	UGL	EE
ASB	2A	070788	CERIUM 144		0.0000	PCML	SR
ASB	2A	070788	CHLOROFORM	LT	1.0000	UGL	EE
ASB	2A	070788	CHLOROFORM	LT	1.0000	UGL	MA
ASB	2A	070788	CHLORIDE		7400.0000	UGL	EE
ASB	2A	070788	SPECIFIC CONDUCTANCE		71.0000	UMHC	FD
ASB	2A	070788	COBALT 60		0.0000	PCML	SR
ASB	2A	070788	CHROMIUM	LT	4.0000	UGL	EE
ASB	2A	070788	CHROMIUM 51		0.0000	PCML	SR
ASB	2A	070788	CESIUM 134		0.0000	PCML	SR
ASB	2A	070788	CESIUM 137		0.0000	PCML	SR
ASB	2A	070788	FLUORIDE	LT	100.0000	UGL	EE
ASB	2A	070788	IRON		34.0000	UGL	EE
ASB	2A	070788	MERCURY	LT	0.2000	UGL	EE
ASB	2A	070788	IODINE 131		0.0000	PCML	SR
ASB	2A	070788	POTASSIUM	LT	500.0000	UGL	EE
ASB	2A	070788	MAGNESIUM		781.0000	UGL	EE
ASB	2A	070788	MANGANESE		20.0000	UGL	EE
ASB	2A	070788	MANGANESE		13.0000	UGL	EE
ASB	2A	070788	SODIUM		8570.0000	UGL	EE
ASB	2A	070788	NITRATE AS NITROGEN		120.0000	UGL	EE
ASB	2A	070788	LEAD	LT	6.0000	UGL	EE
ASB	2A	070788	PH		5.4000	PH	FD
ASB	2A	070788	PHENOLS	LT	5.0000	UGL	EE
ASB	2A	070788	RUTHENIUM 103		0.0000	PCML	SR
ASB	2A	070788	RUTHENIUM 106		0.0000	PCML	SR
ASB	2A	070788	ANTIMONY 125		0.0000	PCML	SR
ASB	2A	070788	SELENIUM	LT	2.0000	UGL	EE
ASB	2A	070788	SILICA		790.0000	UGL	EE

Raw Data for ASB 2A

ASB	2A	070788	SULFATE		9400.0000	UGL	EE
ASB	2A	070788	TETRACHLOROETHYLENE		1.5500	UGL	EE
ASB	2A	070788	TETRACHLOROETHYLENE		1.3200	UGL	MA
ASB	2A	070788	TOTAL ORGANIC CARBON	LT	1000.0000	UGL	EE
ASB	2A	070788	TOTAL RADIUM		2.6300	PCL	EE
ASB	2A	070788	TOTAL ORGANIC HALOGENS		17.0000	UGL	EE
ASB	2A	070788	TOTAL PHOSPHATES		20.0000	UGL	EE
ASB	2A	070788	TRICHLOROETHYLENE	LT	1.0000	UGL	EE
ASB	2A	070788	TRICHLOROETHYLENE	LT	1.0000	UGL	MA
ASB	2A	070788	TRITIUM		1.7400	PCML	EE
ASB	2A	070788	TRANS-1,2-DICHLOROETHENE	LT	1.0000	UGL	MA
ASB	2A	070788	1,1-DICHLOROETHYLENE	LT	1.0000	UGL	MA
ASB	2A	070788	1,1,1-TRICHLOROETHANE	LT	1.0000	UGL	EE
ASB	2A	070788	1,1,1-TRICHLOROETHANE	LT	1.0000	UGL	MA
ASB	2A	070788	ZIRCONIUM/NIOBIUM 95		0.0000	PCML	SR
ASB	2A	100288	CHLOROFORM	LT	1.0000	UGL	MA
ASB	2A	100288	SPECIFIC CONDUCTANCE		82.0000	UMHC	FD
ASB	2A	100288	PH		5.4000	PH	FD
ASB	2A	100288	TETRACHLOROETHYLENE		1.9800	UGL	MA
ASB	2A	100288	TRICHLOROETHYLENE	LT	1.0000	UGL	MA
ASB	2A	100288	TRANS-1,2-DICHLOROETHENE	LT	1.0000	UGL	MA
ASB	2A	100288	1,1-DICHLOROETHYLENE	LT	1.0000	UGL	MA
ASB	2A	100288	1,1,1-TRICHLOROETHANE	LT	1.0000	UGL	MA
ASB	2A	031289	AMERICIUM 241	LT	0.8000	PCL	TE
ASB	2A	031289	BARIUM 140	LT	10.0000	PCL	TE
ASB	2A	031289	BERYLLIUM 7	LT	50.0000	PCL	TE
ASB	2A	031289	CERIUM 141	LT	10.0000	PCL	TE
ASB	2A	031289	CERIUM 144	LT	40.0000	PCL	TE
ASB	2A	031289	CURIUM 242	LT	0.8000	PCL	TE
ASB	2A	031289	CURIUM 246	LT	0.8000	PCL	TE
ASB	2A	031289	CURIUM 243/244	LT	1.0000	PCL	TE
ASB	2A	031289	COBALT 58	LT	5.0000	PCL	TE
ASB	2A	031289	COBALT 60	LT	6.0000	PCL	TE
ASB	2A	031289	CESIUM 134	LT	5.0000	PCL	TE
ASB	2A	031289	CESIUM 137	LT	5.0000	PCL	TE
ASB	2A	031289	IRON 59	LT	10.0000	PCL	TE
ASB	2A	031289	IODINE 131	LT	10.0000	PCL	TE
ASB	2A	031289	POTASSIUM 40	LT	90.0000	PCL	TE
ASB	2A	031289	MANGANESE 54	LT	5.0000	PCL	TE
ASB	2A	031289	PLUTONIUM 238	LT	1.0000	PCL	TE
ASB	2A	031289	PLUTONIUM 239/240		1.6000	PCL	TE
ASB	2A	031289	RADIUM 226	LT	100.0000	PCL	TE
ASB	2A	031289	RADIUM 226		2.7000	PCL	TE
ASB	2A	031289	RADIUM 228		1.4000	PCL	TE
ASB	2A	031289	RUTHENIUM 103	LT	6.0000	PCL	TE
ASB	2A	031289	RUTHENIUM 106	LT	40.0000	PCL	TE
ASB	2A	031289	STRONTIUM 89	LT	2.0000	PCL	TE
ASB	2A	031289	STRONTIUM 90	LT	0.7000	PCL	TE
ASB	2A	031289	THORIUM 228	LT	10.0000	PCL	TE
ASB	2A	031289	URANIUM 234	LT	2.0000	PCL	TE
ASB	2A	031289	URANIUM 235	LT	1.0000	PCL	TE
ASB	2A	031289	ZINC 65	LT	10.0000	PCL	TE
ASB	2A	031289	ZIRCONIUM 95	LT	5.0000	PCL	TE
ASB	2A	031389	SILVER	LT	2.0000	UGL	EE
ASB	2A	031389	SILVER	LT	2.0000	UGL	EE
ASB	2A	031389	SILVER	LT	10.0000	UGL	EW
ASB	2A	031389	SILVER	LT	10.0000	UGL	WA
ASB	2A	031389	ALUMINUM	LT	200.0000	UGL	WA
ASB	2A	031389	GROSS ALPHA		3.5600	PCL	RM
ASB	2A	031389	GROSS ALPHA		5.1200	PCL	RM
ASB	2A	031389	GROSS ALPHA		3.2900	PCL	EW
ASB	2A	031389	GROSS ALPHA		6.0000	PCL	WA
ASB	2A	031389	ARSENIC	LT	2.0000	UGL	EE
ASB	2A	031389	ARSENIC	LT	2.0000	UGL	EE

Raw Data for ASB 2A

ASB	2A	031389	ARSENIC	LT	5.0000	UGL	EW
ASB	2A	031389	ARSENIC	LT	10.0000	UGL	WA
ASB	2A	031389	BARIUM		11.0000	UGL	EE
ASB	2A	031389	BARIUM		11.0000	UGL	EE
ASB	2A	031389	BARIUM	LT	100.0000	UGL	EW
ASB	2A	031389	BARIUM	LT	200.0000	UGL	WA
ASB	2A	031389	BERYLLIUM	LT	5.0000	UGL	WA
ASB	2A	031389	NONVOLATILE BETA		2.4800	PCL	RM
ASB	2A	031389	NONVOLATILE BETA		2.9500	PCL	RM
ASB	2A	031389	NONVOLATILE BETA		2.3000	PCL	EW
ASB	2A	031389	NONVOLATILE BETA		4.0000	PCL	WA
ASB	2A	031389	BROMOCHLOROMETHANE		75.0000	PER	WA
ASB	2A	031389	BROMODICHLOROMETHANE	LT	1.0000	UGL	EW
ASB	2A	031389	CALCIUM		2420.0000	UGL	EE
ASB	2A	031389	CALCIUM		2370.0000	UGL	EE
ASB	2A	031389	CALCIUM		2500.0000	UGL	EW
ASB	2A	031389	CALCIUM	LT	5000.0000	UGL	WA
ASB	2A	031389	TRICHLOROFLUOROMETHANE	LT	1.0000	UGL	EW
ASB	2A	031389	CARBON TETRACHLORIDE	LT	1.0000	UGL	EE
ASB	2A	031389	CARBON TETRACHLORIDE	LT	1.0000	UGL	EE
ASB	2A	031389	CARBON TETRACHLORIDE	LT	1.0000	UGL	EW
ASB	2A	031389	CARBON TETRACHLORIDE	LT	1.0000	UGL	WA
ASB	2A	031389	CADMIUM	LT	2.0000	UGL	EE
ASB	2A	031389	CADMIUM	LT	2.0000	UGL	EE
ASB	2A	031389	CADMIUM	LT	10.0000	UGL	EW
ASB	2A	031389	CADMIUM	LT	5.0000	UGL	WA
ASB	2A	031389	BROMOFORM	LT	1.0000	UGL	EW
ASB	2A	031389	CHLOROFORM	LT	1.0000	UGL	EE
ASB	2A	031389	CHLOROFORM	LT	1.0000	UGL	EE
ASB	2A	031389	CHLOROFORM	LT	1.0000	UGL	MA
ASB	2A	031389	CHLOROFORM	LT	1.0000	UGL	MA
ASB	2A	031389	CHLOROFORM	LT	1.0000	UGL	EW
ASB	2A	031389	CHLOROFORM	LT	1.0000	UGL	WA
ASB	2A	031389	METHYLENE CHLORIDE		3.4000	UGL	EW
ASB	2A	031389	BROMOMETHANE	LT	1.0000	UGL	EW
ASB	2A	031389	CHLOROMETHANE	LT	1.0000	UGL	EW
ASB	2A	031389	CHLORIDE		7600.0000	UGL	EE
ASB	2A	031389	CHLORIDE		7400.0000	UGL	EE
ASB	2A	031389	CHLORIDE		7000.0000	UGL	EW
ASB	2A	031389	CHLORIDE		11700.0000	UGL	WA
ASB	2A	031389	CHLOROBENZENE	LT	1.0000	UGL	EW
ASB	2A	031389	COBALT	LT	50.0000	UGL	WA
ASB	2A	031389	SPECIFIC CONDUCTANCE		90.0000	UMHC	FD
ASB	2A	031389	SPECIFIC CONDUCTANCE		90.0000	UMHC	FD
ASB	2A	031389	SPECIFIC CONDUCTANCE		78.0000	UMHC	EW
ASB	2A	031389	SPECIFIC CONDUCTANCE		84.1000	UMHC	WA
ASB	2A	031389	CHROMIUM	LT	4.0000	UGL	EE
ASB	2A	031389	CHROMIUM	LT	4.0000	UGL	EE
ASB	2A	031389	CHROMIUM	LT	50.0000	UGL	EW
ASB	2A	031389	CHROMIUM	LT	10.0000	UGL	WA
ASB	2A	031389	COPPER	LT	4.0000	UGL	EE
ASB	2A	031389	COPPER	LT	4.0000	UGL	EE
ASB	2A	031389	COPPER	LT	20.0000	UGL	EW
ASB	2A	031389	COPPER	LT	25.0000	UGL	WA
ASB	2A	031389	CHLOROETHENE	LT	1.0000	UGL	EW
ASB	2A	031389	CHLOROETHANE	LT	1.0000	UGL	EW
ASB	2A	031389	BENZENE	LT	1.0000	UGL	EW
ASB	2A	031389	DIBROMOCHLOROMETHANE	LT	1.0000	UGL	EW
ASB	2A	031389	ETHYLBENZENE	LT	1.0000	UGL	EW
ASB	2A	031389	FLUORIDE	LT	100.0000	UGL	EE
ASB	2A	031389	FLUORIDE	LT	100.0000	UGL	EE
ASB	2A	031389	FLUORIDE	LT	100.0000	UGL	EW
ASB	2A	031389	FLUORIDE	LT	100.0000	UGL	WA
ASB	2A	031389	IRON		71.0000	UGL	EE

Raw Data for ASB 2A

ASB	2A	031389	IRON		46.0000	UGL	EE
ASB	2A	031389	IRON		70.0000	UGL	EW
ASB	2A	031389	IRON	LT	100.0000	UGL	WA
ASB	2A	031389	MERCURY	LT	0.2000	UGL	EE
ASB	2A	031389	MERCURY	LT	0.2000	UGL	EE
ASB	2A	031389	MERCURY	LT	0.2000	UGL	EW
ASB	2A	031389	MERCURY	LT	0.2000	UGL	WA
ASB	2A	031389	POTASSIUM	LT	500.0000	UGL	EE
ASB	2A	031389	POTASSIUM	LT	500.0000	UGL	EE
ASB	2A	031389	POTASSIUM	LT	1000.0000	UGL	EW
ASB	2A	031389	POTASSIUM	LT	5000.0000	UGL	WA
ASB	2A	031389	LITHIUM	LT	50.0000	UGL	WA
ASB	2A	031389	TOLUENE	LT	1.0000	UGL	EW
ASB	2A	031389	MAGNESIUM		590.0000	UGL	EE
ASB	2A	031389	MAGNESIUM		579.0000	UGL	EE
ASB	2A	031389	MAGNESIUM		590.0000	UGL	EW
ASB	2A	031389	MAGNESIUM	LT	5000.0000	UGL	WA
ASB	2A	031389	MANGANESE		11.0000	UGL	EE
ASB	2A	031389	MANGANESE		10.0000	UGL	EE
ASB	2A	031389	MANGANESE	LT	20.0000	UGL	EW
ASB	2A	031389	MANGANESE		25.7000	UGL	WA
ASB	2A	031389	SODIUM		12000.0000	UGL	EE
ASB	2A	031389	SODIUM		12600.0000	UGL	EE
ASB	2A	031389	SODIUM		12000.0000	UGL	EW
ASB	2A	031389	SODIUM		13300.0000	UGL	WA
ASB	2A	031389	NICKEL	LT	4.0000	UGL	EE
ASB	2A	031389	NICKEL	LT	4.0000	UGL	EE
ASB	2A	031389	NICKEL	LT	50.0000	UGL	EW
ASB	2A	031389	NICKEL	LT	40.0000	UGL	WA
ASB	2A	031389	NITRATE AS NITROGEN		149.0000	UGL	EE
ASB	2A	031389	NITRATE AS NITROGEN		170.0000	UGL	EE
ASB	2A	031389	NITRATE AS NITROGEN		200.0000	UGL	EW
ASB	2A	031389	NITRATE AS NITROGEN		150.0000	UGL	WA
ASB	2A	031389	LEAD	LT	6.0000	UGL	EE
ASB	2A	031389	LEAD	LT	6.0000	UGL	EE
ASB	2A	031389	LEAD	LT	100.0000	UGL	EW
ASB	2A	031389	LEAD		5.3000	UGL	WA
ASB	2A	031389	PH		5.6000	PH	FD
ASB	2A	031389	PH		5.6000	PH	FD
ASB	2A	031389	PH		5.7000	PH	EW
ASB	2A	031389	PH		5.8000	PH	WA
ASB	2A	031389	PHENOLS	LT	5.0000	UGL	EE
ASB	2A	031389	PHENOLS	LT	5.0000	UGL	EE
ASB	2A	031389	PHENOLS	LT	5.0000	UGL	EW
ASB	2A	031389	PHENOLS	LT	5.0000	UGL	WA
ASB	2A	031389	ANTIMONY	LT	60.0000	UGL	WA
ASB	2A	031389	SELENIUM	LT	2.0000	UGL	EE
ASB	2A	031389	SELENIUM	LT	2.0000	UGL	EE
ASB	2A	031389	SELENIUM	LT	10.0000	UGL	EW
ASB	2A	031389	SELENIUM	LT	5.0000	UGL	WA
ASB	2A	031389	SILICA		3260.0000	UGL	EE
ASB	2A	031389	SILICA		3280.0000	UGL	EE
ASB	2A	031389	SILICA		3280.0000	UGL	EE
ASB	2A	031389	SILICA		3060.0000	UGL	EW
ASB	2A	031389	SILICA		1440.0000	UGL	WA
ASB	2A	031389	TIN	LT	100.0000	UGL	WA
ASB	2A	031389	SULFATE		13400.0000	UGL	EE
ASB	2A	031389	SULFATE		13400.0000	UGL	EE
ASB	2A	031389	SULFATE		14000.0000	UGL	EW
ASB	2A	031389	SULFATE		13200.0000	UGL	WA
ASB	2A	031389	STRONTIUM 89/90		1.2600	PCL	SR
ASB	2A	031389	1,1,2,2-TETRACHLOROETHANE	LT	1.0000	UGL	EW
ASB	2A	031389	TETRACHLOROETHYLENE		2.5400	UGL	EE
ASB	2A	031389	TETRACHLOROETHYLENE		2.0800	UGL	EE

Raw Data for ASB 2A

ASB	2A	031389	TETRACHLOROETHYLENE		3.3600	UGL	MA
ASB	2A	031389	TETRACHLOROETHYLENE		1.4500	UGL	MA
ASB	2A	031389	TETRACHLOROETHYLENE		2.4000	UGL	EW
ASB	2A	031389	TETRACHLOROETHYLENE		2.0000	UGL	WA
ASB	2A	031389	TOTAL DISSOLVED SOLIDS		44000.0000	UGL	EE
ASB	2A	031389	TOTAL DISSOLVED SOLIDS		40000.0000	UGL	EE
ASB	2A	031389	TOTAL DISSOLVED SOLIDS		68000.0000	UGL	EW
ASB	2A	031389	TOTAL DISSOLVED SOLIDS		44000.0000	UGL	WA
ASB	2A	031389	TOTAL DISSOLVED SOLIDS		44000.0000	UGL	WA
ASB	2A	031389	THALLIUM	LT	10.0000	UGL	WA
ASB	2A	031389	TOTAL ORGANIC CARBON	LT	1000.0000	UGL	EE
ASB	2A	031389	TOTAL ORGANIC CARBON	LT	1000.0000	UGL	EE
ASB	2A	031389	TOTAL ORGANIC CARBON	LT	1000.0000	UGL	EE
ASB	2A	031389	TOTAL ORGANIC CARBON	LT	5000.0000	UGL	EW
ASB	2A	031389	TOTAL ORGANIC CARBON		620.0000	UGL	WA
ASB	2A	031389	TOTAL RADIUM		2.5500	PCL	RM
ASB	2A	031389	TOTAL RADIUM		2.8600	PCL	RM
ASB	2A	031389	TOTAL RADIUM		1.9300	PCL	EW
ASB	2A	031389	TOTAL RADIUM		1.1000	PCL	WA
ASB	2A	031389	TOTAL ORGANIC HALOGENS		5.7000	UGL	EE
ASB	2A	031389	TOTAL ORGANIC HALOGENS		6.0000	UGL	EE
ASB	2A	031389	TOTAL ORGANIC HALOGENS	LT	10.0000	UGL	EW
ASB	2A	031389	TOTAL ORGANIC HALOGENS	LT	20.0000	UGL	WA
ASB	2A	031389	TOTAL PHOSPHATES	LT	20.0000	UGL	EE
ASB	2A	031389	TOTAL PHOSPHATES	LT	20.0000	UGL	EE
ASB	2A	031389	TOTAL PHOSPHATES	LT	10.0000	UGL	EW
ASB	2A	031389	TOTAL PHOSPHATES	LT	50.0000	UGL	WA
ASB	2A	031389	TRICHLOROETHYLENE	LT	1.0000	UGL	EE
ASB	2A	031389	TRICHLOROETHYLENE	LT	1.0000	UGL	EE
ASB	2A	031389	TRICHLOROETHYLENE	LT	1.0000	UGL	MA
ASB	2A	031389	TRICHLOROETHYLENE		1.3700	UGL	MA
ASB	2A	031389	TRICHLOROETHYLENE		1.7000	UGL	EW
ASB	2A	031389	TRICHLOROETHYLENE	LT	1.0000	UGL	WA
ASB	2A	031389	TRITIUM		1.1600	PCML	RM
ASB	2A	031389	TRITIUM		1.4000	PCML	RM
ASB	2A	031389	TRITIUM		1.4600	PCML	EW
ASB	2A	031389	TRITIUM		2.0000	PCML	WA
ASB	2A	031389	TRANS-1,2-DICHLOROETHENE	LT	1.0000	UGL	MA
ASB	2A	031389	TRANS-1,2-DICHLOROETHENE	LT	1.0000	UGL	MA
ASB	2A	031389	TRANS-1,2-DICHLOROETHENE	LT	1.0000	UGL	EW
ASB	2A	031389	URANIUM	LT	1000.0000	UGL	WA
ASB	2A	031389	URANIUM AND/OR PLUTONIUM		0.4400	PCL	SR
ASB	2A	031389	VANADIUM	LT	50.0000	UGL	WA
ASB	2A	031389	XYLENES	LT	1.0000	UGL	EW
ASB	2A	031389	1,1-DICHLOROETHYLENE	LT	1.0000	UGL	MA
ASB	2A	031389	1,1-DICHLOROETHYLENE	LT	1.0000	UGL	MA
ASB	2A	031389	1,1-DICHLOROETHYLENE	LT	1.0000	UGL	EW
ASB	2A	031389	1,1-DICHLOROETHANE	LT	1.0000	UGL	EW
ASB	2A	031389	1,1,1-TRICHLOROETHANE	LT	1.0000	UGL	EE
ASB	2A	031389	1,1,1-TRICHLOROETHANE	LT	1.0000	UGL	EE
ASB	2A	031389	1,1,1-TRICHLOROETHANE	LT	1.0000	UGL	MA
ASB	2A	031389	1,1,1-TRICHLOROETHANE	LT	1.0000	UGL	MA
ASB	2A	031389	1,1,1-TRICHLOROETHANE	LT	1.0000	UGL	EW
ASB	2A	031389	1,1,1-TRICHLOROETHANE	LT	1.0000	UGL	WA
ASB	2A	031389	1,1,2-TRICHLOROETHANE	LT	1.0000	UGL	EW
ASB	2A	031389	1,2-DICHLOROBENZENE	LT	1.0000	UGL	EW
ASB	2A	031389	1,2-DICHLOROETHANE	LT	1.0000	UGL	EW
ASB	2A	031389	1,2-DICHLOROPROPANE	LT	1.0000	UGL	EW
ASB	2A	031389	1,3-DICHLOROBENZENE	LT	1.0000	UGL	EW
ASB	2A	031389	CIS-1,3-DICHLOROPROPENE	LT	1.0000	UGL	EW
ASB	2A	031389	TRANS-1,3-DICHLOROPROPENE	LT	1.0000	UGL	EW
ASB	2A	031389	1,4-DICHLOROBENZENE	LT	1.0000	UGL	EW
ASB	2A	031389	2-CHLOROETHYLVINYL ETHER	LT	1.0000	UGL	EW
ASB	2A	031389	ZINC	LT	20.0000	UGL	WA

Raw-Data for ASB 2A

ASB	2A	032589	CERIUM 144	0.0000	PCML SR
ASB	2A	032589	COBALT 60	0.0000	PCML SR
ASB	2A	032589	CHROMIUM 51	0.0000	PCML SR
ASB	2A	032589	CESIUM 134	0.0000	PCML SR
ASB	2A	032589	CESIUM 137	0.0000	PCML SR
ASB	2A	032589	IODINE 131	0.0000	PCML SR
ASB	2A	032589	RUTHENIUM 103	0.0000	PCML SR
ASB	2A	032589	RUTHENIUM 106	0.0000	PCML SR
ASB	2A	032589	ANTIMONY 125	0.0000	PCML SR
ASB	2A	032589	ZIRCONIUM/NIOBIUM 95	0.0000	PCML SR

This Page Intentionally Left Blank.

T-Test Data

This Page Intentionally Left Blank.

T-Test Data for ASB2A

OBS	SERIES	WELL	DATE	TESTNAME	VALUE
1	ASB	BKG	12687	ALUMINUM	43.00
2	ASB	BKG	12987	ALUMINUM	35.33
3	ASB	BKG	20789	ALUMINUM	80.00
4	ASB	BKG	22488	ALUMINUM	59.00
5	ASB	BKG	31289	ALUMINUM	46.50
6	ASB	BKG	40687	ALUMINUM	42.50
7	ASB	BKG	51088	ALUMINUM	253.00
8	ASB	BKG	51188	ALUMINUM	314.00
9	ASB	BKG	61886	ALUMINUM	62.00
10	ASB	BKG	72286	ALUMINUM	37.50
11	ASB	BKG	72386	ALUMINUM	45.00
12	ASB	BKG	80487	ALUMINUM	61.00
13	ASB	BKG	81388	ALUMINUM	42.00
14	ASB	BKG	81488	ALUMINUM	43.00
15	ASB	BKG	102888	ALUMINUM	51.00
16	ASB	BKG	110286	ALUMINUM	33.00
17	ASB	BKG	110386	ALUMINUM	37.67
18	ASB	BKG	110888	ALUMINUM	44.00
19	ASB	BKG	121787	ALUMINUM	74.00
20	ASB	BKG	121987	ALUMINUM	79.00
21	ASB	2A	12087	BARIUM	14.00
22	ASB	2A	22585	BARIUM	17.00
23	ASB	2A	31389	BARIUM	11.00
24	ASB	2A	70788	BARIUM	12.00
25	ASB	2A	81484	BARIUM	18.00
26	ASB	2A	102284	BARIUM	18.00
27	ASB	BKG	12687	BARIUM	7.50
28	ASB	BKG	12987	BARIUM	3.33
29	ASB	BKG	20789	BARIUM	5.00
30	ASB	BKG	22488	BARIUM	8.00
31	ASB	BKG	31289	BARIUM	8.50
32	ASB	BKG	51088	BARIUM	7.00
33	ASB	BKG	51188	BARIUM	2.00
34	ASB	BKG	61886	BARIUM	2.00
35	ASB	BKG	72286	BARIUM	4.00
36	ASB	BKG	72386	BARIUM	7.00
37	ASB	BKG	80487	BARIUM	6.50
38	ASB	BKG	81388	BARIUM	2.00
39	ASB	BKG	81488	BARIUM	6.00
40	ASB	BKG	102888	BARIUM	4.00
41	ASB	BKG	110286	BARIUM	2.00
42	ASB	BKG	110386	BARIUM	7.00
43	ASB	BKG	110888	BARIUM	9.00
44	ASB	BKG	121787	BARIUM	14.00
45	ASB	BKG	121987	BARIUM	5.00
46	ASB	BKG	12687	CALCIUM	265.00
47	ASB	BKG	12987	CALCIUM	876.33
48	ASB	BKG	110286	CALCIUM	983.50
49	ASB	BKG	110386	CALCIUM	655.00
50	ASB	2A	12087	CHLORIDE	6200.00
51	ASB	2A	12688	CHLORIDE	6200.00
52	ASB	2A	21286	CHLORIDE	6400.00
53	ASB	2A	22585	CHLORIDE	6310.00
54	ASB	2A	31389	CHLORIDE	7500.00

T-Test Data for ASB2A

OBS	SERIES	WELL	DATE	TESTNAME	VALUE
55	ASB	2A	70788	CHLORIDE	7400.00
56	ASB	2A	81484	CHLORIDE	7790.00
57	ASB	2A	102284	CHLORIDE	6500.00
58	ASB	BKG	12687	CHLORIDE	2500.00
59	ASB	BKG	12987	CHLORIDE	2900.00
60	ASB	BKG	20789	CHLORIDE	2200.00
61	ASB	BKG	22488	CHLORIDE	2150.00
62	ASB	BKG	31289	CHLORIDE	2500.00
63	ASB	BKG	51088	CHLORIDE	2450.00
64	ASB	BKG	51188	CHLORIDE	2000.00
65	ASB	BKG	61886	CHLORIDE	4166.67
66	ASB	BKG	72286	CHLORIDE	2270.00
67	ASB	BKG	72386	CHLORIDE	2270.00
68	ASB	BKG	80487	CHLORIDE	2950.00
69	ASB	BKG	81388	CHLORIDE	2400.00
70	ASB	BKG	81488	CHLORIDE	2300.00
71	ASB	BKG	102888	CHLORIDE	2100.00
72	ASB	BKG	110286	CHLORIDE	3400.00
73	ASB	BKG	110386	CHLORIDE	2800.00
74	ASB	BKG	110888	CHLORIDE	2200.00
75	ASB	BKG	121987	CHLORIDE	2400.00
76	ASB	BKG	12687	COPPER	4.50
77	ASB	BKG	12987	COPPER	2.00
78	ASB	BKG	20789	COPPER	11.00
79	ASB	BKG	22488	COPPER	7.50
80	ASB	BKG	31289	COPPER	5.50
81	ASB	BKG	51088	COPPER	6.00
82	ASB	BKG	51188	COPPER	5.00
83	ASB	BKG	61886	COPPER	5.50
84	ASB	BKG	72286	COPPER	6.00
85	ASB	BKG	72386	COPPER	3.00
86	ASB	BKG	80487	COPPER	8.50
87	ASB	BKG	81388	COPPER	2.00
88	ASB	BKG	81488	COPPER	4.00
89	ASB	BKG	102888	COPPER	5.00
90	ASB	BKG	110286	COPPER	9.50
91	ASB	BKG	110386	COPPER	9.00
92	ASB	BKG	110888	COPPER	15.00
93	ASB	BKG	121787	COPPER	15.00
94	ASB	BKG	121987	COPPER	5.00
95	ASB	2A	12087	GROSS ALPHA	4.00
96	ASB	2A	12688	GROSS ALPHA	7.00
97	ASB	2A	21286	GROSS ALPHA	20.00
98	ASB	2A	22585	GROSS ALPHA	9.00
99	ASB	2A	31389	GROSS ALPHA	4.50
100	ASB	2A	70788	GROSS ALPHA	4.00
101	ASB	2A	80287	GROSS ALPHA	2.00
102	ASB	2A	80586	GROSS ALPHA	5.50
103	ASB	2A	81484	GROSS ALPHA	4.00
104	ASB	2A	102284	GROSS ALPHA	5.00
105	ASB	BKG	12687	GROSS ALPHA	7.00
106	ASB	BKG	12987	GROSS ALPHA	1.00
107	ASB	BKG	20789	GROSS ALPHA	1.50
108	ASB	BKG	22488	GROSS ALPHA	14.50

T-Test Data for ASB2A

OBS	SERIES	WELL	DATE	TESTNAME	VALUE
109	ASB	BKG	31289	GROSS ALPHA	23.7500
110	ASB	BKG	40687	GROSS ALPHA	5.2500
111	ASB	BKG	61886	GROSS ALPHA	5.7500
112	ASB	BKG	72286	GROSS ALPHA	1.5000
113	ASB	BKG	72386	GROSS ALPHA	7.0000
114	ASB	BKG	80487	GROSS ALPHA	3.7500
115	ASB	BKG	110286	GROSS ALPHA	1.5000
116	ASB	BKG	110386	GROSS ALPHA	7.5000
117	ASB	BKG	121787	GROSS ALPHA	22.0000
118	ASB	BKG	121987	GROSS ALPHA	1.0000
119	ASB	2A	12087	IRON	44.0000
120	ASB	2A	12688	IRON	37.0000
121	ASB	2A	21286	IRON	34.0000
122	ASB	2A	22585	IRON	35.0000
123	ASB	2A	31389	IRON	58.5000
124	ASB	2A	70788	IRON	34.0000
125	ASB	2A	80287	IRON	60.0000
126	ASB	2A	81484	IRON	36.0000
127	ASB	2A	102284	IRON	38.0000
128	ASB	BKG	12687	IRON	19.5000
129	ASB	BKG	12987	IRON	31.5000
130	ASB	BKG	61886	IRON	39.0000
131	ASB	BKG	72286	IRON	31.5000
132	ASB	BKG	72386	IRON	31.3333
133	ASB	BKG	80487	IRON	76.5000
134	ASB	BKG	110286	IRON	33.5000
135	ASB	BKG	110386	IRON	27.6667
136	ASB	BKG	121787	IRON	33.0000
137	ASB	BKG	121987	IRON	40.0000
138	ASB	2A	12087	LEAD	3.0000
139	ASB	2A	12688	LEAD	12.0000
140	ASB	2A	22585	LEAD	8.0000
141	ASB	2A	31389	LEAD	3.0000
142	ASB	2A	41886	LEAD	15.0000
143	ASB	2A	42385	LEAD	11.0000
144	ASB	2A	70788	LEAD	3.0000
145	ASB	2A	80287	LEAD	15.0000
146	ASB	2A	80586	LEAD	19.5000
147	ASB	2A	81385	LEAD	5.0000
148	ASB	2A	81484	LEAD	9.0000
149	ASB	2A	102284	LEAD	26.0000
150	ASB	2A	102985	LEAD	6.0000
151	ASB	BKG	12687	LEAD	11.5000
152	ASB	BKG	12987	LEAD	8.6667
153	ASB	BKG	20789	LEAD	20.0000
154	ASB	BKG	22488	LEAD	8.5000
155	ASB	BKG	31289	LEAD	3.0000
156	ASB	BKG	40687	LEAD	11.0000
157	ASB	BKG	51088	LEAD	11.0000
158	ASB	BKG	51188	LEAD	9.0000
159	ASB	BKG	61886	LEAD	24.5000
160	ASB	BKG	72286	LEAD	22.5000
161	ASB	BKG	72386	LEAD	28.3333
162	ASB	BKG	80487	LEAD	9.5000

T-Test Data for ASB2A

OBS	SERIES	WELL	DATE	TESTNAME	VALUE
163	ASB	BKG	81388	LEAD	3.00
164	ASB	BKG	81488	LEAD	3.00
165	ASB	BKG	102888	LEAD	9.50
166	ASB	BKG	110286	LEAD	17.00
167	ASB	BKG	110386	LEAD	17.67
168	ASB	BKG	110888	LEAD	15.00
169	ASB	BKG	121787	LEAD	8.00
170	ASB	BKG	121987	LEAD	9.00
171	ASB	BKG	12687	MAGNESIUM	435.00
172	ASB	BKG	12987	MAGNESIUM	481.00
173	ASB	BKG	110286	MAGNESIUM	485.00
174	ASB	BKG	110386	MAGNESIUM	443.33
175	ASB	2A	12087	MANGANESE	42.00
176	ASB	2A	12688	MANGANESE	21.00
177	ASB	2A	21286	MANGANESE	48.00
178	ASB	2A	22585	MANGANESE	45.50
179	ASB	2A	31389	MANGANESE	10.50
180	ASB	2A	70788	MANGANESE	16.50
181	ASB	2A	80287	MANGANESE	41.00
182	ASB	2A	80586	MANGANESE	51.50
183	ASB	2A	81484	MANGANESE	74.00
184	ASB	2A	102284	MANGANESE	68.00
185	ASB	BKG	12687	MANGANESE	3.50
186	ASB	BKG	12987	MANGANESE	19.33
187	ASB	BKG	20789	MANGANESE	17.00
188	ASB	BKG	31289	MANGANESE	3.50
189	ASB	BKG	61886	MANGANESE	14.00
190	ASB	BKG	72286	MANGANESE	24.50
191	ASB	BKG	72386	MANGANESE	5.00
192	ASB	BKG	80487	MANGANESE	11.00
193	ASB	BKG	81388	MANGANESE	13.00
194	ASB	BKG	81488	MANGANESE	3.00
195	ASB	BKG	110286	MANGANESE	21.00
196	ASB	BKG	110386	MANGANESE	5.00
197	ASB	BKG	121787	MANGANESE	14.00
198	ASB	BKG	121987	MANGANESE	15.00
199	ASB	2A	12087	NITRATE AS NITROGEN	170.00
200	ASB	2A	22585	NITRATE AS NITROGEN	600.00
201	ASB	2A	31389	NITRATE AS NITROGEN	159.50
202	ASB	2A	70788	NITRATE AS NITROGEN	120.00
203	ASB	2A	81484	NITRATE AS NITROGEN	250.00
204	ASB	2A	102284	NITRATE AS NITROGEN	250.00
205	ASB	BKG	12687	NITRATE AS NITROGEN	2180.00
206	ASB	BKG	12987	NITRATE AS NITROGEN	1200.00
207	ASB	BKG	20789	NITRATE AS NITROGEN	998.00
208	ASB	BKG	22488	NITRATE AS NITROGEN	1525.00
209	ASB	BKG	31289	NITRATE AS NITROGEN	1990.00
210	ASB	BKG	40687	NITRATE AS NITROGEN	1670.00
211	ASB	BKG	51088	NITRATE AS NITROGEN	1560.00
212	ASB	BKG	51188	NITRATE AS NITROGEN	880.00
213	ASB	BKG	61886	NITRATE AS NITROGEN	1783.33
214	ASB	BKG	72286	NITRATE AS NITROGEN	1190.00
215	ASB	BKG	72386	NITRATE AS NITROGEN	2070.00
216	ASB	BKG	80487	NITRATE AS NITROGEN	1675.00

T-Test Data for ASB2A

OBS	SERIES	WELL	DATE	TESTNAME	VALUE
217	ASB	BKG	81388	NITRATE AS NITROGEN	1080.00
218	ASB	BKG	81488	NITRATE AS NITROGEN	1980.00
219	ASB	BKG	102888	NITRATE AS NITROGEN	1210.00
220	ASB	BKG	110286	NITRATE AS NITROGEN	1170.00
221	ASB	BKG	110386	NITRATE AS NITROGEN	2140.00
222	ASB	BKG	110888	NITRATE AS NITROGEN	2240.00
223	ASB	BKG	121787	NITRATE AS NITROGEN	3040.00
224	ASB	BKG	121987	NITRATE AS NITROGEN	1370.00
225	ASB	2A	12087	NONVOLATILE BETA	3.00
226	ASB	2A	12688	NONVOLATILE BETA	5.00
227	ASB	2A	21286	NONVOLATILE BETA	20.00
228	ASB	2A	22585	NONVOLATILE BETA	5.00
229	ASB	2A	31389	NONVOLATILE BETA	2.75
230	ASB	2A	70788	NONVOLATILE BETA	4.00
231	ASB	2A	81484	NONVOLATILE BETA	1.50
232	ASB	2A	102284	NONVOLATILE BETA	4.00
233	ASB	BKG	12687	NONVOLATILE BETA	5.00
234	ASB	BKG	12987	NONVOLATILE BETA	2.00
235	ASB	BKG	20789	NONVOLATILE BETA	1.00
236	ASB	BKG	22488	NONVOLATILE BETA	8.67
237	ASB	BKG	31289	NONVOLATILE BETA	14.25
238	ASB	BKG	40687	NONVOLATILE BETA	4.50
239	ASB	BKG	61886	NONVOLATILE BETA	4.00
240	ASB	BKG	72286	NONVOLATILE BETA	1.00
241	ASB	BKG	72386	NONVOLATILE BETA	4.00
242	ASB	BKG	80487	NONVOLATILE BETA	3.00
243	ASB	BKG	110286	NONVOLATILE BETA	1.00
244	ASB	BKG	110386	NONVOLATILE BETA	5.50
245	ASB	BKG	121787	NONVOLATILE BETA	14.00
246	ASB	BKG	121987	NONVOLATILE BETA	3.00
247	ASB	2A	12087	PH	4.00
248	ASB	2A	12688	PH	5.00
249	ASB	2A	21286	PH	4.00
250	ASB	2A	22585	PH	5.00
251	ASB	2A	31389	PH	6.00
252	ASB	2A	32384	PH	5.00
253	ASB	2A	40588	PH	6.00
254	ASB	2A	41184	PH	6.00
255	ASB	2A	41886	PH	5.00
256	ASB	2A	42385	PH	5.00
257	ASB	2A	42587	PH	5.00
258	ASB	2A	70788	PH	5.00
259	ASB	2A	80287	PH	6.00
260	ASB	2A	80586	PH	5.00
261	ASB	2A	81385	PH	5.00
262	ASB	2A	81484	PH	5.00
263	ASB	2A	100288	PH	5.00
264	ASB	2A	101286	PH	5.00
265	ASB	2A	101887	PH	5.00
266	ASB	2A	102284	PH	5.00
267	ASB	2A	102985	PH	4.00
268	ASB	BKG	12687	PH	5.00
269	ASB	BKG	12987	PH	4.00
270	ASB	BKG	20789	PH	5.00

T-Test Data for ASB2A

OBS	SERIES	WELL	DATE	TESTNAME	VALUE
271	ASB	BKG	22488	PH	5.0
272	ASB	BKG	31289	PH	4.0
273	ASB	BKG	40687	PH	4.5
274	ASB	BKG	51088	PH	4.0
275	ASB	BKG	51188	PH	5.0
276	ASB	BKG	61886	PH	5.0
277	ASB	BKG	72286	PH	5.0
278	ASB	BKG	72386	PH	5.0
279	ASB	BKG	80487	PH	5.0
280	ASB	BKG	81388	PH	5.0
281	ASB	BKG	81488	PH	4.0
282	ASB	BKG	90687	PH	5.0
283	ASB	BKG	90887	PH	5.0
284	ASB	BKG	102888	PH	5.0
285	ASB	BKG	110286	PH	4.0
286	ASB	BKG	110386	PH	4.0
287	ASB	BKG	110888	PH	5.0
288	ASB	BKG	121787	PH	4.0
289	ASB	BKG	121987	PH	5.0
290	ASB	2A	12087	SODIUM	2790.0
291	ASB	2A	12688	SODIUM	7040.0
292	ASB	2A	21286	SODIUM	2790.0
293	ASB	2A	22585	SODIUM	3355.0
294	ASB	2A	31389	SODIUM	12300.0
295	ASB	2A	42385	SODIUM	3136.0
296	ASB	2A	70788	SODIUM	8570.0
297	ASB	2A	80287	SODIUM	3910.0
298	ASB	2A	81385	SODIUM	2470.0
299	ASB	2A	81484	SODIUM	2930.0
300	ASB	2A	101286	SODIUM	2790.0
301	ASB	2A	102284	SODIUM	3100.0
302	ASB	2A	102985	SODIUM	4000.0
303	ASB	BKG	12687	SODIUM	4475.0
304	ASB	BKG	12987	SODIUM	1990.0
305	ASB	BKG	20789	SODIUM	1740.0
306	ASB	BKG	22488	SODIUM	2610.0
307	ASB	BKG	31289	SODIUM	2530.0
308	ASB	BKG	40687	SODIUM	2840.0
309	ASB	BKG	51088	SODIUM	3700.0
310	ASB	BKG	51188	SODIUM	1680.0
311	ASB	BKG	61886	SODIUM	2620.0
312	ASB	BKG	72286	SODIUM	1935.0
313	ASB	BKG	72386	SODIUM	4330.0
314	ASB	BKG	80487	SODIUM	2620.0
315	ASB	BKG	81388	SODIUM	1630.0
316	ASB	BKG	81488	SODIUM	3360.0
317	ASB	BKG	102888	SODIUM	1730.0
318	ASB	BKG	110286	SODIUM	1725.0
319	ASB	BKG	110386	SODIUM	3880.0
320	ASB	BKG	110888	SODIUM	3280.0
321	ASB	BKG	121787	SODIUM	3460.0
322	ASB	BKG	121987	SODIUM	1660.0
323	ASB	2A	12087	SPECIFIC CONDUCTANCE	61.0
324	ASB	2A	12688	SPECIFIC CONDUCTANCE	61.0

T-Test Data for ASB2A

SAS 13:46 Saturday, August 5, 1989 89

OBS	SERIES	WELL	DATE	TESTNAME	VALUE
325	ASB	2A	21286	SPECIFIC CONDUCTANCE	39.0
326	ASB	2A	22585	SPECIFIC CONDUCTANCE	69.0
327	ASB	2A	31389	SPECIFIC CONDUCTANCE	90.0
328	ASB	2A	32384	SPECIFIC CONDUCTANCE	49.0
329	ASB	2A	40588	SPECIFIC CONDUCTANCE	74.0
330	ASB	2A	41184	SPECIFIC CONDUCTANCE	44.0
331	ASB	2A	41886	SPECIFIC CONDUCTANCE	42.0
332	ASB	2A	42385	SPECIFIC CONDUCTANCE	48.0
333	ASB	2A	42587	SPECIFIC CONDUCTANCE	55.0
334	ASB	2A	70788	SPECIFIC CONDUCTANCE	71.0
335	ASB	2A	80287	SPECIFIC CONDUCTANCE	58.0
336	ASB	2A	80586	SPECIFIC CONDUCTANCE	56.0
337	ASB	2A	81385	SPECIFIC CONDUCTANCE	50.0
338	ASB	2A	81484	SPECIFIC CONDUCTANCE	58.0
339	ASB	2A	100288	SPECIFIC CONDUCTANCE	82.0
340	ASB	2A	101286	SPECIFIC CONDUCTANCE	52.0
341	ASB	2A	101887	SPECIFIC CONDUCTANCE	65.0
342	ASB	2A	102284	SPECIFIC CONDUCTANCE	80.0
343	ASB	2A	102985	SPECIFIC CONDUCTANCE	38.0
344	ASB	BKG	12687	SPECIFIC CONDUCTANCE	19.0
345	ASB	BKG	12987	SPECIFIC CONDUCTANCE	28.0
346	ASB	BKG	20789	SPECIFIC CONDUCTANCE	28.0
347	ASB	BKG	22488	SPECIFIC CONDUCTANCE	31.5
348	ASB	BKG	31289	SPECIFIC CONDUCTANCE	35.0
349	ASB	BKG	40687	SPECIFIC CONDUCTANCE	30.0
350	ASB	BKG	51088	SPECIFIC CONDUCTANCE	38.0
351	ASB	BKG	51188	SPECIFIC CONDUCTANCE	24.0
352	ASB	BKG	61886	SPECIFIC CONDUCTANCE	26.0
353	ASB	BKG	72286	SPECIFIC CONDUCTANCE	26.0
354	ASB	BKG	72386	SPECIFIC CONDUCTANCE	40.0
355	ASB	BKG	80487	SPECIFIC CONDUCTANCE	31.0
356	ASB	BKG	81388	SPECIFIC CONDUCTANCE	25.0
357	ASB	BKG	81488	SPECIFIC CONDUCTANCE	36.0
358	ASB	BKG	90687	SPECIFIC CONDUCTANCE	29.0
359	ASB	BKG	90887	SPECIFIC CONDUCTANCE	38.0
360	ASB	BKG	102888	SPECIFIC CONDUCTANCE	25.0
361	ASB	BKG	110286	SPECIFIC CONDUCTANCE	32.0
362	ASB	BKG	110386	SPECIFIC CONDUCTANCE	43.0
363	ASB	BKG	110888	SPECIFIC CONDUCTANCE	35.0
364	ASB	BKG	121787	SPECIFIC CONDUCTANCE	28.0
365	ASB	BKG	121987	SPECIFIC CONDUCTANCE	20.0
366	ASB	2A	12087	SULFATE	6000.0
367	ASB	2A	12688	SULFATE	2500.0
368	ASB	2A	21286	SULFATE	8000.0
369	ASB	2A	22585	SULFATE	2500.0
370	ASB	2A	31389	SULFATE	13400.0
371	ASB	2A	70788	SULFATE	9400.0
372	ASB	2A	81484	SULFATE	11000.0
373	ASB	2A	102284	SULFATE	2500.0
374	ASB	2A	12087	TETRACHLOROETHYLENE	0.5
375	ASB	2A	12688	TETRACHLOROETHYLENE	1.0
376	ASB	2A	31389	TETRACHLOROETHYLENE	2.5
377	ASB	2A	42587	TETRACHLOROETHYLENE	1.0
378	ASB	2A	70788	TETRACHLOROETHYLENE	2.0

T-Test Data for ASB2A

OBS	SERIES	WELL	DATE	TESTNAME	VALUE
379	ASB	2A	80287	TETRACHLOROETHYLENE	0.50
380	ASB	2A	101286	TETRACHLOROETHYLENE	2.50
381	ASB	2A	101887	TETRACHLOROETHYLENE	0.50
382	ASB	2A	12087	TOTAL DISSOLVED SOLIDS	18000.00
383	ASB	2A	31389	TOTAL DISSOLVED SOLIDS	42000.00
384	ASB	2A	81484	TOTAL DISSOLVED SOLIDS	30000.00
385	ASB	2A	102284	TOTAL DISSOLVED SOLIDS	22000.00
386	ASB	BKG	12687	TOTAL DISSOLVED SOLIDS	22000.00
387	ASB	BKG	12987	TOTAL DISSOLVED SOLIDS	32000.00
388	ASB	BKG	20789	TOTAL DISSOLVED SOLIDS	2500.00
389	ASB	BKG	22488	TOTAL DISSOLVED SOLIDS	24000.00
390	ASB	BKG	31289	TOTAL DISSOLVED SOLIDS	23000.00
391	ASB	BKG	40687	TOTAL DISSOLVED SOLIDS	28400.00
392	ASB	BKG	51088	TOTAL DISSOLVED SOLIDS	40000.00
393	ASB	BKG	51188	TOTAL DISSOLVED SOLIDS	26000.00
394	ASB	BKG	80487	TOTAL DISSOLVED SOLIDS	64000.00
395	ASB	BKG	81388	TOTAL DISSOLVED SOLIDS	28000.00
396	ASB	BKG	81488	TOTAL DISSOLVED SOLIDS	31000.00
397	ASB	BKG	102888	TOTAL DISSOLVED SOLIDS	112000.00
398	ASB	BKG	110888	TOTAL DISSOLVED SOLIDS	59000.00
399	ASB	BKG	121787	TOTAL DISSOLVED SOLIDS	9000.00
400	ASB	BKG	121987	TOTAL DISSOLVED SOLIDS	52000.00
401	ASB	2A	12087	TOTAL ORGANIC HALOGENS	2.50
402	ASB	2A	12688	TOTAL ORGANIC HALOGENS	2.50
403	ASB	2A	21286	TOTAL ORGANIC HALOGENS	6.00
404	ASB	2A	22585	TOTAL ORGANIC HALOGENS	2.50
405	ASB	2A	31389	TOTAL ORGANIC HALOGENS	6.00
406	ASB	2A	42385	TOTAL ORGANIC HALOGENS	2.50
407	ASB	2A	70788	TOTAL ORGANIC HALOGENS	17.00
408	ASB	2A	80287	TOTAL ORGANIC HALOGENS	2.50
409	ASB	2A	80586	TOTAL ORGANIC HALOGENS	5.50
410	ASB	2A	81385	TOTAL ORGANIC HALOGENS	13.00
411	ASB	2A	101286	TOTAL ORGANIC HALOGENS	2.50
412	ASB	2A	102985	TOTAL ORGANIC HALOGENS	9.50
413	ASB	BKG	12687	TOTAL PHOSPHATES	30.00
414	ASB	BKG	12987	TOTAL PHOSPHATES	40.00
415	ASB	BKG	20789	TOTAL PHOSPHATES	10.00
416	ASB	BKG	31289	TOTAL PHOSPHATES	13.67
417	ASB	BKG	40687	TOTAL PHOSPHATES	10.00
418	ASB	BKG	51088	TOTAL PHOSPHATES	30.00
419	ASB	BKG	51188	TOTAL PHOSPHATES	40.00
420	ASB	BKG	61886	TOTAL PHOSPHATES	9.50
421	ASB	BKG	72286	TOTAL PHOSPHATES	39.00
422	ASB	BKG	72386	TOTAL PHOSPHATES	42.00
423	ASB	BKG	80487	TOTAL PHOSPHATES	15.00
424	ASB	BKG	81388	TOTAL PHOSPHATES	10.00
425	ASB	BKG	81488	TOTAL PHOSPHATES	10.00
426	ASB	BKG	102888	TOTAL PHOSPHATES	10.00
427	ASB	BKG	110286	TOTAL PHOSPHATES	39.50
428	ASB	BKG	110386	TOTAL PHOSPHATES	37.00
429	ASB	BKG	110888	TOTAL PHOSPHATES	60.00
430	ASB	BKG	121787	TOTAL PHOSPHATES	70.00
431	ASB	BKG	121987	TOTAL PHOSPHATES	100.00
432	ASB	2A	12087	TOTAL RADIUM	5.00

T-Test Data for ASB2A

OBS	SERIES	WELL	DATE	TESTNAME	VALUE
433	ASB	2A	12688	TOTAL RADIUM	4.000
434	ASB	2A	21286	TOTAL RADIUM	6.000
435	ASB	2A	22585	TOTAL RADIUM	5.000
436	ASB	2A	31389	TOTAL RADIUM	2.250
437	ASB	2A	70788	TOTAL RADIUM	3.000
438	ASB	2A	80287	TOTAL RADIUM	5.000
439	ASB	2A	80586	TOTAL RADIUM	4.500
440	ASB	2A	81484	TOTAL RADIUM	5.000
441	ASB	2A	102284	TOTAL RADIUM	4.000
442	ASB	BKG	12687	TOTAL RADIUM	7.000
443	ASB	BKG	12987	TOTAL RADIUM	0.500
444	ASB	BKG	20789	TOTAL RADIUM	1.000
445	ASB	BKG	22488	TOTAL RADIUM	4.833
446	ASB	BKG	31289	TOTAL RADIUM	12.000
447	ASB	BKG	40687	TOTAL RADIUM	4.250
448	ASB	BKG	51088	TOTAL RADIUM	6.000
449	ASB	BKG	51188	TOTAL RADIUM	0.500
450	ASB	BKG	61886	TOTAL RADIUM	4.500
451	ASB	BKG	72286	TOTAL RADIUM	1.000
452	ASB	BKG	72386	TOTAL RADIUM	9.000
453	ASB	BKG	80487	TOTAL RADIUM	3.500
454	ASB	BKG	81388	TOTAL RADIUM	1.000
455	ASB	BKG	81488	TOTAL RADIUM	7.000
456	ASB	BKG	102888	TOTAL RADIUM	0.500
457	ASB	BKG	110286	TOTAL RADIUM	0.500
458	ASB	BKG	110386	TOTAL RADIUM	7.500
459	ASB	BKG	110888	TOTAL RADIUM	6.000
460	ASB	BKG	121787	TOTAL RADIUM	6.000
461	ASB	BKG	121987	TOTAL RADIUM	0.000
462	ASB	BKG	40687	TURBIDITY	0.000
463	ASB	BKG	61886	TURBIDITY	0.667
464	ASB	BKG	80487	TURBIDITY	0.500
465	ASB	BKG	121787	TURBIDITY	0.000
466	ASB	BKG	121987	TURBIDITY	0.000
467	ASB	2A	12087	ZINC	42.000
468	ASB	2A	41886	ZINC	1.000
469	ASB	2A	81484	ZINC	11.000
470	ASB	2A	102284	ZINC	129.000
471	ASB	BKG	12687	ZINC	7.000
472	ASB	BKG	12987	ZINC	8.667
473	ASB	BKG	20789	ZINC	17.000
474	ASB	BKG	31289	ZINC	11.000
475	ASB	BKG	51088	ZINC	6.000
476	ASB	BKG	51188	ZINC	11.000
477	ASB	BKG	61886	ZINC	9.750
478	ASB	BKG	72286	ZINC	15.500
479	ASB	BKG	72386	ZINC	2.000
480	ASB	BKG	80487	ZINC	46.500
481	ASB	BKG	81388	ZINC	49.000
482	ASB	BKG	81488	ZINC	24.000
483	ASB	BKG	102888	ZINC	44.000
484	ASB	BKG	110286	ZINC	8.000
485	ASB	BKG	110386	ZINC	11.333
486	ASB	BKG	110888	ZINC	12.000

T-Test Data for ASB2A

OBS	SERIES	WELL	DATE	TESTNAME	VALUE
487	ASB	BKG	121787	ZINC	54
488	ASB	BKG	121987	ZINC	17

Statistical Comparison Results

This Page Intentionally Left Blank.

TTEST PROCEDURE

********** TESTNAME=BARIUM **********

Variable: VALUE

WELL	N	Mean	Std Dev	Std Error	Minimum	Maximum
2A	6	15.00000000	3.09838668	1.26491106	11.00000000	18.00000000
BKG	19	5.78070175	3.06365222	0.70285002	2.00000000	14.00000000

Variances	T	Method	DF	Prob>|T|
Unequal	6.3710	Satterthwaite	8.3	0.0002
		Cochran	.	0.0009
Equal	6.4101		23.0	0.0000

For H0: Variances are equal, F' = 1.02 DF = (5,18) Prob>F' = 0.8671

********** TESTNAME=CHLORIDE **********

Variable: VALUE

WELL	N	Mean	Std Dev	Std Error	Minimum	Maximum
2A	8	6787.500000	658.8897588	232.9527083	6200.000000	7790.000000
BKG	18	2553.148148	535.2422605	126.1578107	2000.000000	4166.666667

Variances	T	Method	DF	Prob>|T|
Unequal	15.9835	Satterthwaite	11.3	0.0001
		Cochran	.	0.0001
Equal	17.3589		24.0	0.0000

For H0: Variances are equal, F' = 1.52 DF = (7,17) Prob>F' = 0.4557

********** TESTNAME=GROSS ALPHA **********

Variable: VALUE

WELL	N	Mean	Std Dev	Std Error	Minimum	Maximum
2A	10	6.50000000	5.10990324	1.61589329	2.00000000	20.00000000
BKG	14	7.35714286	7.53562965	2.01398174	1.00000000	23.75000000

Variances	T	Method	DF	Prob>|T|
Unequal	-0.3320	Satterthwaite	22.0	0.7431
		Cochran	.	0.7461
Equal	-0.3113		22.0	0.7585

For H0: Variances are equal, F' = 2.17 DF = (13,9) Prob>F' = 0.2463

********** TESTNAME=IRON **********

Variable: VALUE

WELL	N	Mean	Std Dev	Std Error	Minimum	Maximum
2A	9	41.83333333	10.33198916	3.44399639	34.00000000	60.00000000
BKG	10	36.35000000	15.21420105	4.81115281	19.50000000	76.50000000

Variances	T	Method	DF	Prob>|T|
Unequal	0.9267	Satterthwaite	15.9	0.3679
		Cochran	.	0.3792
Equal	0.9079		17.0	0.3766

For H0: Variances are equal, F' = 2.17 DF = (9,8) Prob>F' = 0.2894

********** TESTNAME=LEAD **********

Variable: VALUE

WELL	N	Mean	Std Dev	Std Error	Minimum	Maximum
2A	13	10.42307692	7.02331283	1.94791650	3.00000000	26.00000000
BKG	20	12.48333333	7.15919643	1.60084499	3.00000000	28.33333333

Variances	T	Method	DF	Prob>|T|
Unequal	-0.8171	Satterthwaite	26.1	0.4212
		Cochran		0.4275
Equal	-0.8137		31.0	0.4220

For H0: Variances are equal, F' = 1.04 DF = (19,12) Prob>F' = 0.9740

********** TESTNAME=MANGANESE **********

Variable: VALUE

WELL	N	Mean	Std Dev	Std Error	Minimum	Maximum
2A	10	41.80000000	20.87688781	6.60185159	10.50000000	74.00000000
BKG	14	12.05952381	7.11703360	1.90210724	3.00000000	24.50000000

Variances	T	Method	DF	Prob>|T|
Unequal	4.3288	Satterthwaite	10.5	0.0013
		Cochran	.	0.0018
Equal	4.9778		22.0	0.0001

For H0: Variances are equal, F' = 8.60 DF = (9,13) Prob>F' = 0.0007

********** TESTNAME=NITRATE AS NITROGEN **********

Variable: VALUE

WELL	N	Mean	Std Dev	Std Error	Minimum	Maximum
2A	6	258.250000	175.2608770	71.5499534	120.0000000	600.000000
BKG	20	1647.566667	538.2189613	120.3494184	880.0000000	3040.000000

Variances	T	Method	DF	Prob>|T|
Unequal	-9.9228	Satterthwaite	23.6	0.0001
		Cochran	.	0.0001
Equal	-6.1475		24.0	0.0000

For H0: Variances are equal, F' = 9.43 DF = (19,5) Prob>F' = 0.0207

********** TESTNAME=NONVOLATILE BETA **********

Variable: VALUE

WELL	N	Mean	Std Dev	Std Error	Minimum	Maximum
2A	8	5.65625000	5.91447604	2.09108306	1.50000000	20.00000000
BKG	14	5.06547619	4.36284068	1.16601822	1.00000000	14.25000000

Variances	T	Method	DF	Prob>|T|
Unequal	0.2468	Satterthwaite	11.4	0.8095
		Cochran	.	0.8114
Equal	0.2687		20.0	0.7909

For H0: Variances are equal, F' = 1.84 DF = (7,13) Prob>F' = 0.3258

********** TESTNAME=PH **********

Variable: VALUE

WELL	N	Mean	Std Dev	Std Error	Minimum	Maximum
2A	21	5.04761905	0.58959227	0.12865958	4.00000000	6.00000000
BKG	22	4.65909091	0.47274184	0.10078890	4.00000000	5.00000000

Variances	T	Method	DF	Prob>|T|
Unequal	2.3772	Satterthwaite	38.3	0.0225
		Cochran	.	0.0273
Equal	2.3896		41.0	0.0215

For H0: Variances are equal, F' = 1.56 DF = (20,21) Prob>F' = 0.3226

********** TESTNAME=SODIUM **********

Variable: VALUE

WELL	N	Mean	Std Dev	Std Error	Minimum	Maximum
2A	13	4552.384615	2956.751414	820.0552947	2470.000000	12300.00000
BKG	20	2689.750000	939.937673	210.1764531	1630.000000	4475.00000

Variances	T	Method	DF	Prob>|T|
Unequal	2.2002	Satterthwaite	13.6	0.0457
		Cochran	.	0.0477
Equal	2.6388		31.0	0.0129

For H0: Variances are equal, F' = 9.90 DF = (12,19) Prob>F' = 0.0000

********** TESTNAME=SPECIFIC CONDUCTANCE **********

Variable: VALUE

WELL	N	Mean	Std Dev	Std Error	Minimum	Maximum
2A	21	59.14285714	14.45090210	3.15344537	38.00000000	90.00000000
BKG	22	30.34090909	6.32340016	1.34815344	19.00000000	43.00000000

Variances	T	Method	DF	Prob>|T|
Unequal	8.3982	Satterthwaite	27.1	0.0001
		Cochran	.	0.0001
Equal	8.5351		41.0	0.0000

For H0: Variances are equal, F' = 5.22 DF = (20,21) Prob>F' = 0.0004

********** TESTNAME=TOTAL DISSOLVED SOLIDS **********

Variable: VALUE

WELL	N	Mean	Std Dev	Std Error	Minimum	Maximum
2A	4	28000.00000	10583.00524	5291.502622	18000.00000	42000.0000
BKG	15	36860.00000	26689.90713	6891.304390	2500.00000	112000.0000

Variances	T	Method	DF	Prob>|T|
Unequal	-1.0197	Satterthwaite	13.5	0.3258
		Cochran	.	0.3492
Equal	-0.6394		17.0	0.5311

For H0: Variances are equal, F' = 6.36 DF = (14,3) Prob>F' = 0.1535

********** TESTNAME=TOTAL RADIUM **********

Variable: VALUE

WELL	N	Mean	Std Dev	Std Error	Minimum	Maximum
2A	10	4.37500000	1.10082040	0.34810998	2.25000000	6.00000000
BKG	20	4.12916667	3.43490798	0.76806877	0.00000000	12.00000000

Variances	T	Method	DF	Prob>|T|
Unequal	0.2915	Satterthwaite	25.3	0.7730
		Cochran	.	0.7744
Equal	0.2191		28.0	0.8282

For H0: Variances are equal, F' = 9.74 DF = (19,9) Prob>F' = 0.0014

********** TESTNAME=ZINC **********

Variable: VALUE

WELL	N	Mean	Std Dev	Std Error	Minimum	Maximum
2A	4	45.75000000	58.18003667	29.09001833	1.00000000	129.0000000
BKG	18	19.65277778	16.61846584	3.91700996	2.00000000	54.0000000

Variances	T	Method	DF	Prob>|T|
Unequal	0.8891	Satterthwaite	3.1	0.4378
		Cochran	.	0.4386
Equal	1.7326		20.0	0.0986

For H0: Variances are equal, F' = 12.26 DF = (3,17) Prob>F' = 0.0003

Groundwater Monitoring Well

ASB 3A

This Page Intentionally Left Blank.

Raw Data

This Page Intentionally Left Blank.

Raw Data for ASB 3A

ASB	3A	081584	SILVER	LT	2.0000	UGL	EE
ASB	3A	081584	GROSS ALPHA		6.0000	PCL	CP
ASB	3A	081584	ARSENIC	LT	1.0000	UGL	EE
ASB	3A	081584	BARIUM		21.0000	UGL	EE
ASB	3A	081584	BERYLLIUM	LT	2.0000	UGL	EE
ASB	3A	081584	NONVOLATILE BETA	LT	3.0000	PCL	CP
ASB	3A	081584	CADMIUM	LT	2.0000	UGL	EE
ASB	3A	081584	CHLORIDE		7520.0000	UGL	EE
ASB	3A	081584	COLOR		13.0000	APC	EE
ASB	3A	081584	SPECIFIC CONDUCTANCE		79.0000	UMHC	FD
ASB	3A	081584	CHROMIUM	LT	4.0000	UGL	EE
ASB	3A	081584	COPPER	LT	4.0000	UGL	EE
ASB	3A	081584	CYANIDE	LT	5.0000	UGL	EE
ASB	3A	081584	DISSOLVED ORGANIC CARBON	LT	5000.0000	UGL	EE
ASB	3A	081584	FLUORIDE		120.0000	UGL	EE
ASB	3A	081584	IRON		41.0000	UGL	EE
ASB	3A	081584	GC SCAN	LT	40.0000	UGL	EE
ASB	3A	081584	MERCURY		0.2900	UGL	EE
ASB	3A	081584	MANGANESE		15.0000	UGL	EE
ASB	3A	081584	SODIUM		3580.0000	UGL	EE
ASB	3A	081584	NICKEL	LT	4.0000	UGL	EE
ASB	3A	081584	NITRITE AS NITROGEN	LT	500.0000	UGL	EE
ASB	3A	081584	NITRATE AS NITROGEN	LT	500.0000	UGL	EE
ASB	3A	081584	ODOR		0.0000	THON	EE
ASB	3A	081584	LEAD	LT	4.0000	UGL	EE
ASB	3A	081584	PH		5.4000	PH	FD
ASB	3A	081584	PHENOLS		7.0000	UGL	EE
ASB	3A	081584	SELENIUM	LT	1.0000	UGL	EE
ASB	3A	081584	SILVEX	LT	2.0000	UGL	EE
ASB	3A	081584	SULFATE	LT	10000.0000	UGL	EE
ASB	3A	081584	SULFATE	LT	10000.0000	UGL	EE
ASB	3A	081584	SULFIDE	LT	1000.0000	UGL	EE
ASB	3A	081584	SURFACTANTS	LT	10.0000	UGL	EE
ASB	3A	081584	TOTAL DISSOLVED SOLIDS		40000.0000	UGL	EE
ASB	3A	081584	TOTAL ORGANIC CARBON	LT	5000.0000	UGL	EE
ASB	3A	081584	TOTAL RADIUM		6.0000	PCL	CP
ASB	3A	081584	TOTAL ORGANIC HALOGENS	LT	5.0000	UGL	MM
ASB	3A	081584	TURBIDITY		85.0000	TU	EE
ASB	3A	081584	2,4-DICHLOROPHENOXYACETIC ACID	LT	20.0000	UGL	EE
ASB	3A	081584	ZINC		42.0000	UGL	EE
ASB	3A	102284	SILVER	LT	2.0000	UGL	EE
ASB	3A	102284	SILVER	LT	2.0000	UGL	EE
ASB	3A	102284	GROSS ALPHA	LT	2.0000	PCL	CP
ASB	3A	102284	ARSENIC	LT	1.0000	UGL	EE
ASB	3A	102284	ARSENIC	LT	1.0000	UGL	EE
ASB	3A	102284	BARIUM		21.0000	UGL	EE
ASB	3A	102284	BARIUM		20.0000	UGL	EE
ASB	3A	102284	BERYLLIUM	LT	2.0000	UGL	EE
ASB	3A	102284	BERYLLIUM	LT	2.0000	UGL	EE
ASB	3A	102284	NONVOLATILE BETA	LT	3.0000	PCL	CP
ASB	3A	102284	CADMIUM	LT	2.0000	UGL	EE
ASB	3A	102284	CADMIUM	LT	2.0000	UGL	EE
ASB	3A	102284	CHLORIDE		5300.0000	UGL	EE
ASB	3A	102284	COLOR		0.0000	APC	EE
ASB	3A	102284	SPECIFIC CONDUCTANCE		92.0000	UMHC	FD
ASB	3A	102284	CORROSIVITY		0.0021	MMY	EE
ASB	3A	102284	CHROMIUM	LT	4.0000	UGL	EE
ASB	3A	102284	CHROMIUM	LT	4.0000	UGL	EE
ASB	3A	102284	COPPER	LT	4.0000	UGL	EE
ASB	3A	102284	COPPER	LT	4.0000	UGL	EE
ASB	3A	102284	CYANIDE	LT	5.0000	UGL	EE
ASB	3A	102284	DISSOLVED ORGANIC CARBON	LT	5000.0000	UGL	EE
ASB	3A	102284	ENDRIN	LT	0.0400	UGL	EE
ASB	3A	102284	ENDRIN	LT	0.0400	UGL	EE

Raw Data for ASB 3A

ASB	3A	102284	FLUORIDE	LT	100.0000	UGL	EE
ASB	3A	102284	IRON		33.0000	UGL	EE
ASB	3A	102284	IRON		36.0000	UGL	EE
ASB	3A	102284	GC SCAN	LT	40.0000	UGL	EE
ASB	3A	102284	MERCURY	LT	0.2000	UGL	EE
ASB	3A	102284	LINDANE	LT	1.0000	UGL	EE
ASB	3A	102284	LINDANE	LT	1.0000	UGL	EE
ASB	3A	102284	METHOXYCHLOR	LT	20.0000	UGL	EE
ASB	3A	102284	METHOXYCHLOR	LT	20.0000	UGL	EE
ASB	3A	102284	MANGANESE		13.0000	UGL	EE
ASB	3A	102284	MANGANESE		12.0000	UGL	EE
ASB	3A	102284	SODIUM		2780.0000	UGL	EE
ASB	3A	102284	SODIUM		3030.0000	UGL	EE
ASB	3A	102284	NICKEL	LT	4.0000	UGL	EE
ASB	3A	102284	NICKEL	LT	4.0000	UGL	EE
ASB	3A	102284	NITRITE AS NITROGEN	LT	500.0000	UGL	EE
ASB	3A	102284	NITRITE AS NITROGEN	LT	500.0000	UGL	EE
ASB	3A	102284	NITRATE AS NITROGEN	LT	500.0000	UGL	EE
ASB	3A	102284	NITRATE AS NITROGEN	LT	500.0000	UGL	EE
ASB	3A	102284	ODOR		0.0000	THON	EE
ASB	3A	102284	LEAD	LT	4.0000	UGL	EE
ASB	3A	102284	LEAD	LT	4.0000	UGL	EE
ASB	3A	102284	PH		5.4000	PH	FD
ASB	3A	102284	PHENOLS	LT	2.0000	UGL	EE
ASB	3A	102284	PHENOLS	LT	2.0000	UGL	EE
ASB	3A	102284	SELENIUM	LT	1.0000	UGL	EE
ASB	3A	102284	SELENIUM	LT	1.0000	UGL	EE
ASB	3A	102284	SILVEX	LT	2.0000	UGL	EE
ASB	3A	102284	SULFATE	LT	5000.0000	UGL	EE
ASB	3A	102284	SULFATE	LT	5000.0000	UGL	EE
ASB	3A	102284	SULFIDE	LT	1000.0000	UGL	EE
ASB	3A	102284	SURFACTANTS	LT	10.0000	UGL	EE
ASB	3A	102284	TOTAL DISSOLVED SOLIDS		16000.0000	UGL	EE
ASB	3A	102284	TOTAL ORGANIC CARBON	LT	5000.0000	UGL	EE
ASB	3A	102284	TOTAL RADIUM	LT	1.0000	PCL	CP
ASB	3A	102284	TOTAL ORGANIC HALOGENS	LT	5.0000	UGL	MM
ASB	3A	102284	TURBIDITY		6.5000	TU	EE
ASB	3A	102284	TOXAPHENE	LT	1.0000	UGL	EE
ASB	3A	102284	TOXAPHENE	LT	1.0000	UGL	EE
ASB	3A	102284	2,4-DICHLOROPHENOXYACETIC ACID	LT	20.0000	UGL	EE
ASB	3A	102284	ZINC		304.0000	UGL	EE
ASB	3A	102284	ZINC		298.0000	UGL	EE
ASB	3A	022585	SILVER	LT	2.0000	UGL	EE
ASB	3A	022585	SILVER	LT	2.0000	UGL	EE
ASB	3A	022585	GROSS ALPHA		15.0000	PCL	CP
ASB	3A	022585	ARSENIC	LT	1.0000	UGL	EE
ASB	3A	022585	ARSENIC	LT	1.0000	UGL	EE
ASB	3A	022585	BARIUM		26.0000	UGL	EE
ASB	3A	022585	BARIUM		25.0000	UGL	EE
ASB	3A	022585	NONVOLATILE BETA		11.0000	PCL	CP
ASB	3A	022585	CADMIUM	LT	2.0000	UGL	EE
ASB	3A	022585	CADMIUM	LT	2.0000	UGL	EE
ASB	3A	022585	CHLORIDE		7280.0000	UGL	EE
ASB	3A	022585	SPECIFIC CONDUCTANCE		70.0000	UMHC	FD
ASB	3A	022585	CHROMIUM	LT	4.0000	UGL	EE
ASB	3A	022585	CHROMIUM	LT	4.0000	UGL	EE
ASB	3A	022585	ENDRIN	LT	0.0400	UGL	EE
ASB	3A	022585	FLUORIDE	LT	100.0000	UGL	EE
ASB	3A	022585	IRON		85.0000	UGL	EE
ASB	3A	022585	IRON	LT	4.0000	UGL	EE
ASB	3A	022585	MERCURY		0.4100	UGL	EE
ASB	3A	022585	LINDANE	LT	1.0000	UGL	EE
ASB	3A	022585	METHOXYCHLOR	LT	20.0000	UGL	EE
ASB	3A	022585	MANGANESE		6.0000	UGL	EE

Raw Data for ASB 3A

ASB	3A	022585	SODIUM		3080.0000	UGL	EE
ASB	3A	022585	SODIUM		3010.0000	UGL	EE
ASB	3A	022585	NITRATE AS NITROGEN	LT	500.0000	UGL	EE
ASB	3A	022585	LEAD	LT	4.0000	UGL	EE
ASB	3A	022585	LEAD	LT	4.0000	UGL	EE
ASB	3A	022585	PH		4.9000	PH	FD
ASB	3A	022585	PHENOLS	LT	2.0000	UGL	EE
ASB	3A	022585	SELENIUM	LT	1.0000	UGL	EE
ASB	3A	022585	SELENIUM	LT	1.0000	UGL	EE
ASB	3A	022585	SILVEX	LT	2.0000	UGL	EE
ASB	3A	022585	SULFATE	LT	5000.0000	UGL	EE
ASB	3A	022585	TOTAL ORGANIC CARBON		295.0000	UGL	EE
ASB	3A	022585	TOTAL RADIUM		4.0000	PCL	CP
ASB	3A	022585	TOTAL ORGANIC HALOGENS		25.1000	UGL	EE
ASB	3A	022585	TURBIDITY		2.2000	TU	EE
ASB	3A	022585	TOXAPHENE	LT	1.0000	UGL	EE
ASB	3A	022585	2,4-DICHLOROPHENOXYACETIC ACID	LT	20.0000	UGL	EE
ASB	3A	042385	SPECIFIC CONDUCTANCE		42.0000	UMHC	FD
ASB	3A	042385	CHROMIUM	LT	4.0000	UGL	EE
ASB	3A	042385	MERCURY	LT	0.2000	UGL	EE
ASB	3A	042385	SODIUM		2518.0000	UGL	EE
ASB	3A	042385	LEAD	LT	4.0000	UGL	EE
ASB	3A	042385	PH		5.4000	PH	FD
ASB	3A	042385	TOTAL ORGANIC CARBON		536.0000	UGL	EE
ASB	3A	042385	TOTAL ORGANIC HALOGENS	LT	5.0000	UGL	EE
ASB	3A	081385	SPECIFIC CONDUCTANCE		45.0000	UMHC	FD
ASB	3A	081385	CHROMIUM	LT	4.0000	UGL	EE
ASB	3A	081385	MERCURY	LT	0.2000	UGL	EE
ASB	3A	081385	SODIUM		2200.0000	UGL	EE
ASB	3A	081385	LEAD	LT	10.0000	UGL	EE
ASB	3A	081385	PH		5.4000	PH	FD
ASB	3A	081385	TOTAL ORGANIC CARBON		350.0000	UGL	EE
ASB	3A	081385	TOTAL ORGANIC HALOGENS		10.0000	UGL	EE
ASB	3A	102985	SPECIFIC CONDUCTANCE		35.0000	UMHC	FD
ASB	3A	102985	CHROMIUM	LT	4.0000	UGL	EE
ASB	3A	102985	MERCURY	LT	0.2000	UGL	EE
ASB	3A	102985	SODIUM		3380.0000	UGL	EE
ASB	3A	102985	LEAD	LT	5.0000	UGL	EE
ASB	3A	102985	PH		5.0000	PH	FD
ASB	3A	102985	TOTAL ORGANIC CARBON		430.0000	UGL	EE
ASB	3A	102985	TOTAL ORGANIC CARBON		440.0000	UGL	EE
ASB	3A	102985	TOTAL ORGANIC HALOGENS	LT	5.0000	UGL	EE
ASB	3A	021286	GROSS ALPHA		18.0000	PCL	CP
ASB	3A	021286	NONVOLATILE BETA		21.0000	PCL	CP
ASB	3A	021286	CHLORIDE		6400.0000	UGL	EE
ASB	3A	021286	SPECIFIC CONDUCTANCE		38.0000	UMHC	FD
ASB	3A	021286	IRON		64.0000	UGL	EE
ASB	3A	021286	MERCURY		0.4800	UGL	EE
ASB	3A	021286	MANGANESE		11.0000	UGL	EE
ASB	3A	021286	SODIUM		4260.0000	UGL	EE
ASB	3A	021286	PH		4.7000	PH	FD
ASB	3A	021286	PHENOLS	LT	2.0000	UGL	EE
ASB	3A	021286	SULFATE	LT	5000.0000	UGL	EE
ASB	3A	021286	TOTAL ORGANIC CARBON	LT	1000.0000	UGL	EE
ASB	3A	021286	TOTAL RADIUM		11.0000	PCL	CP
ASB	3A	021286	TOTAL ORGANIC HALOGENS		5.0000	UGL	EE
ASB	3A	021286	TOTAL ORGANIC HALOGENS	LT	5.0000	UGL	EE
ASB	3A	041686	SPECIFIC CONDUCTANCE		51.0000	UMHC	FD
ASB	3A	041686	CHROMIUM	LT	4.0000	UGL	EE
ASB	3A	041686	NICKEL		4.0000	UGL	EE
ASB	3A	041686	LEAD		18.0000	UGL	EE
ASB	3A	041686	PH		5.2000	PH	FD
ASB	3A	041686	ZINC		19.0000	UGL	EE
ASB	3A	080586	GROSS ALPHA		22.9000	PCL	RM

Raw Data for ASB 3A

ASB	3A	080586	SPECIFIC CONDUCTANCE		48.0000	UMHC	FD
ASB	3A	080586	SPECIFIC CONDUCTANCE		41.6000	UMHC	EE
ASB	3A	080586	CHROMIUM	LT	4.0000	UGL	EE
ASB	3A	080586	MANGANESE		10.0000	UGL	EE
ASB	3A	080586	LEAD		7.0000	UGL	EE
ASB	3A	080586	PH		4.8000	PH	FD
ASB	3A	080586	PH		5.6000	PH	EE
ASB	3A	080586	TOTAL ORGANIC CARBON		3000.0000	UGL	EE
ASB	3A	080586	TOTAL RADIUM		5.5000	PCL	RM
ASB	3A	080586	TOTAL ORGANIC HALOGENS		6.0000	UGL	EE
ASB	3A	101286	BROMODICHLOROMETHANE	LT	5.0000	UGL	EE
ASB	3A	101286	TRICHLOROFLUOROMETHANE	LT	5.0000	UGL	EE
ASB	3A	101286	CARBON TETRACHLORIDE	LT	5.0000	UGL	EE
ASB	3A	101286	BROMOFORM	LT	10.0000	UGL	EE
ASB	3A	101286	CHLOROFORM	LT	5.0000	UGL	EE
ASB	3A	101286	BROMOMETHANE	LT	10.0000	UGL	EE
ASB	3A	101286	CHLOROMETHANE	LT	10.0000	UGL	EE
ASB	3A	101286	CHLOROBENZENE	LT	5.0000	UGL	EE
ASB	3A	101286	SPECIFIC CONDUCTANCE		55.0000	UMHC	FD
ASB	3A	101286	CHROMIUM	LT	4.0000	UGL	EE
ASB	3A	101286	CHLOROETHENE	LT	10.0000	UGL	EE
ASB	3A	101286	CHLOROETHANE	LT	10.0000	UGL	EE
ASB	3A	101286	BENZENE	LT	5.0000	UGL	EE
ASB	3A	101286	DIBROMOCHLOROMETHANE	LT	5.0000	UGL	EE
ASB	3A	101286	ETHYLBENZENE	LT	5.0000	UGL	EE
ASB	3A	101286	TOLUENE-D8		99.0000	PER	EE
ASB	3A	101286	TOLUENE	LT	5.0000	UGL	EE
ASB	3A	101286	SODIUM		3170.0000	UGL	EE
ASB	3A	101286	P-BROMOFLUOROBENZENE		98.0000	PER	EE
ASB	3A	101286	PH		5.1000	PH	FD
ASB	3A	101286	1,1,2,2-TETRACHLOROETHANE	LT	10.0000	UGL	EE
ASB	3A	101286	TETRACHLOROETHYLENE	LT	5.0000	UGL	EE
ASB	3A	101286	TOTAL ORGANIC HALOGENS	LT	5.0000	UGL	EE
ASB	3A	101286	TRICHLOROETHYLENE	LT	5.0000	UGL	EE
ASB	3A	101286	TRANS-1,2-DICHLOROETHENE	LT	5.0000	UGL	EE
ASB	3A	101286	1,1-DICHLOROETHYLENE	LT	5.0000	UGL	EE
ASB	3A	101286	1,1-DICHLOROETHANE	LT	5.0000	UGL	EE
ASB	3A	101286	1,1,1-TRICHLOROETHANE	LT	5.0000	UGL	EE
ASB	3A	101286	1,1,2-TRICHLOROETHANE	LT	5.0000	UGL	EE
ASB	3A	101286	1,2-DICHLOROETHANE-D4		89.0000	PER	EE
ASB	3A	101286	1,2-DICHLOROETHANE	LT	1.0000	UGL	EE
ASB	3A	101286	1,2-DICHLOROPROPANE	LT	10.0000	UGL	EE
ASB	3A	101286	CIS-1,3-DICHLOROPROPENE	LT	5.0000	UGL	EE
ASB	3A	101286	TRANS-1,3-DICHLOROPROPENE	LT	5.0000	UGL	EE
ASB	3A	101286	2-CHLOROETHYLVINYL ETHER	LT	10.0000	UGL	EE
ASB	3A	020387	SILVER	LT	2.0000	UGL	EE
ASB	3A	020387	GROSS ALPHA		5.7000	PCL	RM
ASB	3A	020387	GROSS ALPHA		6.3000	PCL	RM
ASB	3A	020387	ARSENIC	LT	2.0000	UGL	EE
ASB	3A	020387	ARSENIC	LT	2.0000	UGL	EE
ASB	3A	020387	BARIUM		30.0000	UGL	EE
ASB	3A	020387	NONVOLATILE BETA		3.9000	PCL	RM
ASB	3A	020387	NONVOLATILE BETA		5.5000	PCL	RM
ASB	3A	020387	CALCIUM		4460.0000	UGL	EE
ASB	3A	020387	CARBON TETRACHLORIDE	LT	1.0000	UGL	EE
ASB	3A	020387	CADMIUM	LT	2.0000	UGL	EE
ASB	3A	020387	CHLOROFORM	LT	1.0000	UGL	EE
ASB	3A	020387	CHLORIDE		5600.0000	UGL	EE
ASB	3A	020387	SPECIFIC CONDUCTANCE		53.0000	UMHC	FD
ASB	3A	020387	CHROMIUM	LT	4.0000	UGL	EE
ASB	3A	020387	COPPER	LT	4.0000	UGL	EE
ASB	3A	020387	FLUORIDE	LT	100.0000	UGL	EE
ASB	3A	020387	IRON		37.0000	UGL	EE
ASB	3A	020387	MERCURY	LT	0.2000	UGL	EE

Raw Data for ASB 3A

ASB	3A	020387	POTASSIUM		530.0000	UGL	EE
ASB	3A	020387	MAGNESIUM		1230.0000	UGL	EE
ASB	3A	020387	MANGANESE		10.0000	UGL	EE
ASB	3A	020387	SODIUM		2870.0000	UGL	EE
ASB	3A	020387	NICKEL		6.0000	UGL	EE
ASB	3A	020387	NITRATE AS NITROGEN		70.0000	UGL	EE
ASB	3A	020387	LEAD		6.0000	UGL	EE
ASB	3A	020387	PH		5.9000	PH	FD
ASB	3A	020387	PHENOLS	LT	2.0000	UGL	EE
ASB	3A	020387	SELENIUM	LT	2.0000	UGL	EE
ASB	3A	020387	SELENIUM	LT	2.0000	UGL	EE
ASB	3A	020387	SILICA		2700.0000	UGL	EE
ASB	3A	020387	SILICA		2700.0000	UGL	EE
ASB	3A	020387	SULFATE		11600.0000	UGL	EE
ASB	3A	020387	TETRACHLOROETHYLENE	LT	1.0000	UGL	EE
ASB	3A	020387	TOTAL DISSOLVED SOLIDS		20000.0000	UGL	EE
ASB	3A	020387	TOTAL ORGANIC CARBON	LT	1000.0000	UGL	EE
ASB	3A	020387	TOTAL RADIUM		5.3000	PCL	RM
ASB	3A	020387	TOTAL RADIUM		5.2000	PCL	RM
ASB	3A	020387	TOTAL ORGANIC HALOGENS	LT	5.0000	UGL	EE
ASB	3A	020387	TOTAL PHOSPHATES		30.0000	UGL	EE
ASB	3A	020387	TRICHLOROETHYLENE	LT	1.0000	UGL	EE
ASB	3A	020387	TRITIUM		6.2400	PCML	RM
ASB	3A	020387	TRITIUM		6.0200	PCML	RM
ASB	3A	020387	1,1,1-TRICHLOROETHANE	LT	1.0000	UGL	EE
ASB	3A	020387	ZINC		2.0000	UGL	EE
ASB	3A	042587	CARBON TETRACHLORIDE	LT	1.0000	UGL	EE
ASB	3A	042587	CHLOROFORM	LT	1.0000	UGL	EE
ASB	3A	042587	SPECIFIC CONDUCTANCE		44.0000	UMHC	FD
ASB	3A	042587	PH		5.7000	PH	FD
ASB	3A	042587	TETRACHLOROETHYLENE	LT	1.0000	UGL	EE
ASB	3A	042587	TRICHLOROETHYLENE	LT	1.0000	UGL	EE
ASB	3A	042587	1,1,1-TRICHLOROETHANE	LT	1.0000	UGL	EE
ASB	3A	080287	GROSS ALPHA		3.4000	PCL	RM
ASB	3A	080287	CARBON TETRACHLORIDE	LT	1.0000	UGL	EE
ASB	3A	080287	CARBON TETRACHLORIDE		106.0000	PER	EE
ASB	3A	080287	CHLOROFORM	LT	1.0000	UGL	EE
ASB	3A	080287	CHLOROFORM		101.0000	PER	EE
ASB	3A	080287	SPECIFIC CONDUCTANCE		37.0000	UMHC	FD
ASB	3A	080287	CHROMIUM	LT	4.0000	UGL	EE
ASB	3A	080287	IRON		57.0000	UGL	EE
ASB	3A	080287	MANGANESE		10.0000	UGL	EE
ASB	3A	080287	SODIUM		2430.0000	UGL	EE
ASB	3A	080287	LEAD		23.0000	UGL	EE
ASB	3A	080287	PH		6.3000	PH	FD
ASB	3A	080287	TETRACHLOROETHYLENE	LT	1.0000	UGL	EE
ASB	3A	080287	TETRACHLOROETHYLENE		115.0000	PER	EE
ASB	3A	080287	TOTAL ORGANIC CARBON		2000.0000	UGL	EE
ASB	3A	080287	TOTAL RADIUM		4.6000	PCL	RM
ASB	3A	080287	TOTAL ORGANIC HALOGENS	LT	5.0000	UGL	EE
ASB	3A	080287	TRICHLOROETHYLENE	LT	1.0000	UGL	EE
ASB	3A	080287	TRICHLOROETHYLENE		115.0000	PER	EE
ASB	3A	080287	1,1,1-TRICHLOROETHANE	LT	1.0000	UGL	EE
ASB	3A	080287	1,1,1-TRICHLOROETHANE		105.0000	PER	EE
ASB	3A	101887	CARBON TETRACHLORIDE	LT	1.0000	UGL	EE
ASB	3A	101887	CARBON TETRACHLORIDE	LT	1.0000	UGL	EE
ASB	3A	101887	CHLOROFORM	LT	1.0000	UGL	EE
ASB	3A	101887	CHLOROFORM	LT	1.0000	UGL	EE
ASB	3A	101887	SPECIFIC CONDUCTANCE		39.0000	UMHC	FD
ASB	3A	101887	PH		5.6000	PH	FD
ASB	3A	101887	TETRACHLOROETHYLENE	LT	1.0000	UGL	EE
ASB	3A	101887	TETRACHLOROETHYLENE	LT	1.0000	UGL	EE
ASB	3A	101887	TRICHLOROETHYLENE	LT	1.0000	UGL	EE
ASB	3A	101887	TRICHLOROETHYLENE	LT	1.0000	UGL	EE

Raw Data for ASB 3A

ASB	3A	101887	1,1,1-TRICHLOROETHANE	LT	1.0000	UGL	EE
ASB	3A	101887	1,1,1-TRICHLOROETHANE	LT	1.0000	UGL	EE
ASB	3A	012688	GROSS ALPHA		14.3000	PCL	EE
ASB	3A	012688	GROSS ALPHA		10.5000	PCL	EE
ASB	3A	012688	NONVOLATILE BETA		9.9000	PCL	EE
ASB	3A	012688	NONVOLATILE BETA		8.1000	PCL	EE
ASB	3A	012688	CARBON TETRACHLORIDE	LT	1.0000	UGL	EE
ASB	3A	012688	CARBON TETRACHLORIDE		112.0000	PER	EE
ASB	3A	012688	CADMIUM	LT	2.0000	UGL	EE
ASB	3A	012688	CHLOROFORM	LT	1.0000	UGL	EE
ASB	3A	012688	CHLOROFORM		105.0000	PER	EE
ASB	3A	012688	CHLORIDE		4000.0000	UGL	EE
ASB	3A	012688	SPECIFIC CONDUCTANCE		35.0000	UMHC	FD
ASB	3A	012688	COPPER	LT	4.0000	UGL	EE
ASB	3A	012688	IRON		55.0000	UGL	EE
ASB	3A	012688	MERCURY	LT	0.2000	UGL	EE
ASB	3A	012688	MANGANESE		6.0000	UGL	EE
ASB	3A	012688	SODIUM		2720.0000	UGL	EE
ASB	3A	012688	NICKEL	LT	4.0000	UGL	EE
ASB	3A	012688	LEAD	LT	6.0000	UGL	EE
ASB	3A	012688	PH		5.1000	PH	FD
ASB	3A	012688	SULFATE	LT	5000.0000	UGL	EE
ASB	3A	012688	TETRACHLOROETHYLENE	LT	1.0000	UGL	EE
ASB	3A	012688	TETRACHLOROETHYLENE		109.0000	PER	EE
ASB	3A	012688	TOTAL ORGANIC CARBON	LT	1000.0000	UGL	EE
ASB	3A	012688	TOTAL RADIUM		4.3000	PCL	EE
ASB	3A	012688	TOTAL RADIUM		3.4000	PCL	EE
ASB	3A	012688	TOTAL ORGANIC HALOGENS	LT	5.0000	UGL	EE
ASB	3A	012688	TRICHLOROETHYLENE	LT	1.0000	UGL	EE
ASB	3A	012688	TRICHLOROETHYLENE		114.0000	PER	EE
ASB	3A	012688	1,1,1-TRICHLOROETHANE	LT	1.0000	UGL	EE
ASB	3A	012688	1,1,1-TRICHLOROETHANE		96.0000	PER	EE
ASB	3A	040588	CHLOROFORM	LT	1.0000	UGL	MA
ASB	3A	040588	SPECIFIC CONDUCTANCE		44.0000	UMHC	FD
ASB	3A	040588	PH		6.0000	PH	FD
ASB	3A	040588	TETRACHLOROETHYLENE	LT	1.0000	UGL	MA
ASB	3A	040588	TRICHLOROETHYLENE	LT	1.0000	UGL	MA
ASB	3A	040588	1,1,1-TRICHLOROETHANE	LT	1.0000	UGL	MA
ASB	3A	070788	SILVER	LT	2.0000	UGL	EE
ASB	3A	070788	GROSS ALPHA		8.0100	PCL	EE
ASB	3A	070788	ARSENIC	LT	2.0000	UGL	EE
ASB	3A	070788	BARIUM		19.0000	UGL	EE
ASB	3A	070788	NONVOLATILE BETA		3.7000	PCL	EE
ASB	3A	070788	CALCIUM		2730.0000	UGL	EE
ASB	3A	070788	CARBON TETRACHLORIDE	LT	1.0000	UGL	EE
ASB	3A	070788	CARBON TETRACHLORIDE		100.0000	PER	EE
ASB	3A	070788	CARBON TETRACHLORIDE	LT	1.0000	UGL	EE
ASB	3A	070788	CADMIUM	LT	2.0000	UGL	EE
ASB	3A	070788	CERIUM 144		0.0000	PCML	SR
ASB	3A	070788	CHLOROFORM	LT	1.0000	UGL	EE
ASB	3A	070788	CHLOROFORM		112.0000	PER	EE
ASB	3A	070788	CHLOROFORM	LT	1.0000	UGL	EE
ASB	3A	070788	CHLOROFORM	LT	1.0000	UGL	MA
ASB	3A	070788	CHLORIDE		4700.0000	UGL	EE
ASB	3A	070788	SPECIFIC CONDUCTANCE		40.0000	UMHC	FD
ASB	3A	070788	COBALT 60		0.0000	PCML	SR
ASB	3A	070788	CHROMIUM	LT	4.0000	UGL	EE
ASB	3A	070788	CHROMIUM 51		0.0000	PCML	SR
ASB	3A	070788	CESIUM 134		0.0000	PCML	SR
ASB	3A	070788	CESIUM 137		0.0000	PCML	SR
ASB	3A	070788	FLUORIDE	LT	100.0000	UGL	EE
ASB	3A	070788	IRON		105.0000	UGL	EE
ASB	3A	070788	MERCURY	LT	0.2000	UGL	EE
ASB	3A	070788	IODINE 131		0.0000	PCML	SR

Raw Data for ASB 3A

ASB	3A	070788	POTASSIUM	LT	500.0000	UGL	EE
ASB	3A	070788	MAGNESIUM		886.0000	UGL	EE
ASB	3A	070788	MANGANESE		7.0000	UGL	EE
ASB	3A	070788	SODIUM		3050.0000	UGL	EE
ASB	3A	070788	NITRATE AS NITROGEN		190.0000	UGL	EE
ASB	3A	070788	LEAD	LT	6.0000	UGL	EE
ASB	3A	070788	PH		5.5000	PH	FD
ASB	3A	070788	PHENOLS	LT	5.0000	UGL	EE
ASB	3A	070788	RUTHENIUM 103		0.0000	PCML	SR
ASB	3A	070788	RUTHENIUM 106		0.0000	PCML	SR
ASB	3A	070788	ANTIMONY 125		0.0000	PCML	SR
ASB	3A	070788	SELENIUM	LT	2.0000	UGL	EE
ASB	3A	070788	SILICA		2340.0000	UGL	EE
ASB	3A	070788	SULFATE	LT	5000.0000	UGL	EE
ASB	3A	070788	TETRACHLOROETHYLENE	LT	1.0000	UGL	EE
ASB	3A	070788	TETRACHLOROETHYLENE		102.0000	PER	EE
ASB	3A	070788	TETRACHLOROETHYLENE	LT	1.0000	UGL	EE
ASB	3A	070788	TETRACHLOROETHYLENE	LT	1.0000	UGL	MA
ASB	3A	070788	TOTAL ORGANIC CARBON	LT	1000.0000	UGL	EE
ASB	3A	070788	TOTAL RADIUM		2.9800	PCL	EE
ASB	3A	070788	TOTAL ORGANIC HALOGENS	LT	5.0000	UGL	EE
ASB	3A	070788	TOTAL PHOSPHATES		20.0000	UGL	EE
ASB	3A	070788	TOTAL PHOSPHATES		20.0000	UGL	EE
ASB	3A	070788	TRICHLOROETHYLENE	LT	1.0000	UGL	EE
ASB	3A	070788	TRICHLOROETHYLENE		102.0000	PER	EE
ASB	3A	070788	TRICHLOROETHYLENE	LT	1.0000	UGL	EE
ASB	3A	070788	TRICHLOROETHYLENE	LT	1.0000	UGL	MA
ASB	3A	070788	TRITIUM		1.3100	PCML	EE
ASB	3A	070788	TRANS-1,2-DICHLOROETHENE	LT	1.0000	UGL	MA
ASB	3A	070788	1,1-DICHLOROETHYLENE	LT	1.0000	UGL	MA
ASB	3A	070788	1,1,1-TRICHLOROETHANE	LT	1.0000	UGL	EE
ASB	3A	070788	1,1,1-TRICHLOROETHANE		110.0000	PER	EE
ASB	3A	070788	1,1,1-TRICHLOROETHANE	LT	1.0000	UGL	EE
ASB	3A	070788	1,1,1-TRICHLOROETHANE	LT	1.0000	UGL	MA
ASB	3A	070788	ZIRCONIUM/NIOBIUM 95		0.0000	PCML	SR
ASB	3A	100288	CHLOROFORM	LT	1.0000	UGL	MA
ASB	3A	100288	SPECIFIC CONDUCTANCE		54.0000	UMHC	FD
ASB	3A	100288	PH		5.6000	PH	FD
ASB	3A	100288	TETRACHLOROETHYLENE	LT	1.0000	UGL	MA
ASB	3A	100288	TRICHLOROETHYLENE	LT	1.0000	UGL	MA
ASB	3A	100288	TRANS-1,2-DICHLOROETHENE	LT	1.0000	UGL	MA
ASB	3A	100288	1,1-DICHLOROETHYLENE	LT	1.0000	UGL	MA
ASB	3A	100288	1,1,1-TRICHLOROETHANE	LT	1.0000	UGL	MA
ASB	3A	032789	SILVER	LT	2.0000	UGL	EE
ASB	3A	032789	GROSS ALPHA		3.4400	PCL	RM
ASB	3A	032789	AMERICIUM 241		0.0960	PCL	TE
ASB	3A	032789	ARSENIC	LT	2.0000	UGL	EE
ASB	3A	032789	BARIUM		19.0000	UGL	EE
ASB	3A	032789	BARIUM 140	LT	10.0000	PCL	TE
ASB	3A	032789	NONVOLATILE BETA		3.1700	PCL	RM
ASB	3A	032789	BERYLLIUM 7	LT	50.0000	PCL	TE
ASB	3A	032789	CALCIUM		4050.0000	UGL	EE
ASB	3A	032789	CARBON TETRACHLORIDE	LT	1.0000	UGL	EE
ASB	3A	032789	CARBON TETRACHLORIDE	LT	1.0000	UGL	EE
ASB	3A	032789	CADMIUM	LT	2.0000	UGL	EE
ASB	3A	032789	CERIUM 141	LT	10.0000	PCL	TE
ASB	3A	032789	CERIUM 144		0.0000	PCML	SR
ASB	3A	032789	CERIUM 144	LT	50.0000	PCL	TE
ASB	3A	032789	CHLOROFORM	LT	1.0000	UGL	EE
ASB	3A	032789	CHLOROFORM	LT	1.0000	UGL	EE
ASB	3A	032789	CHLOROFORM	LT	1.0000	UGL	MA
ASB	3A	032789	CHLORIDE		4800.0000	UGL	EE
ASB	3A	032789	CHLORIDE		4900.0000	UGL	EE
ASB	3A	032789	CURIUM 242	LT	0.0800	PCL	TE

ASB	3A	032789	CURIUM 243/244		0.4000	PCL	TE
ASB	3A	032789	SPECIFIC CONDUCTANCE		43.0000	UMHC	FD
ASB	3A	032789	COBALT 58	LT	5.0000	PCL	TE
ASB	3A	032789	COBALT 60		0.0000	PCML	SR
ASB	3A	032789	COBALT 60	LT	6.0000	PCL	TE
ASB	3A	032789	CHROMIUM	LT	4.0000	UGL	EE
ASB	3A	032789	CHROMIUM 51		0.0000	PCML	SR
ASB	3A	032789	CESIUM 134		0.0000	PCML	SR
ASB	3A	032789	CESIUM 134	LT	6.0000	PCL	TE
ASB	3A	032789	CESIUM 137		0.0000	PCML	SR
ASB	3A	032789	CESIUM 137	LT	6.0000	PCL	TE
ASB	3A	032789	COPPER		4.0000	UGL	EE
ASB	3A	032789	FLUORIDE	LT	100.0000	UGL	EE
ASB	3A	032789	FLUORIDE	LT	100.0000	UGL	EE
ASB	3A	032789	IRON		71.0000	UGL	EE
ASB	3A	032789	IRON 59	LT	10.0000	PCL	TE
ASB	3A	032789	MERCURY	LT	0.2000	UGL	EE
ASB	3A	032789	IODINE 131		0.0000	PCML	SR
ASB	3A	032789	IODINE 131	LT	20.0000	PCL	TE
ASB	3A	032789	POTASSIUM	LT	500.0000	UGL	EE
ASB	3A	032789	POTASSIUM 40	LT	100.0000	PCL	TE
ASB	3A	032789	MAGNESIUM		648.0000	UGL	EE
ASB	3A	032789	MANGANESE		5.0000	UGL	EE
ASB	3A	032789	MANGANESE 54	LT	5.0000	PCL	TE
ASB	3A	032789	SODIUM		4050.0000	UGL	EE
ASB	3A	032789	NICKEL	LT	4.0000	UGL	EE
ASB	3A	032789	NITRATE AS NITROGEN		364.0000	UGL	EE
ASB	3A	032789	NITRATE AS NITROGEN		363.0000	UGL	EE
ASB	3A	032789	LEAD	LT	6.0000	UGL	EE
ASB	3A	032789	PH		5.3000	PH	FD
ASB	3A	032789	PHENOLS	LT	5.0000	UGL	EE
ASB	3A	032789	PLUTONIUM 238		0.9300	PCL	TE
ASB	3A	032789	PLUTONIUM 239/240		0.2200	PCL	TE
ASB	3A	032789	RADIUM 226	LT	100.0000	PCL	TE
ASB	3A	032789	RADIUM 226		2.2000	PCL	TE
ASB	3A	032789	RADIUM 228		2.2000	PCL	TE
ASB	3A	032789	RUTHENIUM 103		0.0000	PCML	SR
ASB	3A	032789	RUTHENIUM 103	LT	6.0000	PCL	TE
ASB	3A	032789	RUTHENIUM 106		0.0000	PCML	SR
ASB	3A	032789	RUTHENIUM 106	LT	40.0000	PCL	TE
ASB	3A	032789	ANTIMONY 125		0.0000	PCML	SR
ASB	3A	032789	SELENIUM	LT	2.0000	UGL	EE
ASB	3A	032789	SILICA		5810.0000	UGL	EE
ASB	3A	032789	SULFATE	LT	5000.0000	UGL	EE
ASB	3A	032789	SULFATE	LT	5000.0000	UGL	EE
ASB	3A	032789	STRONTIUM 89	LT	3.0000	PCL	TE
ASB	3A	032789	STRONTIUM 90	LT	1.0000	PCL	TE
ASB	3A	032789	TETRACHLOROETHYLENE	LT	1.0000	UGL	EE
ASB	3A	032789	TETRACHLOROETHYLENE	LT	1.0000	UGL	EE
ASB	3A	032789	TETRACHLOROETHYLENE	LT	1.0000	UGL	MA
ASB	3A	032789	TOTAL DISSOLVED SOLIDS		32000.0000	UGL	EE
ASB	3A	032789	TOTAL DISSOLVED SOLIDS		30000.0000	UGL	EE
ASB	3A	032789	THORIUM 228	LT	10.0000	PCL	TE
ASB	3A	032789	TOTAL ORGANIC CARBON		2300.0000	UGL	EE
ASB	3A	032789	TOTAL RADIUM		1.4700	PCL	RM
ASB	3A	032789	TOTAL ORGANIC HALOGENS		22.0000	UGL	EE
ASB	3A	032789	TOTAL PHOSPHATES		29.0000	UGL	EE
ASB	3A	032789	TRICHLOROETHYLENE	LT	1.0000	UGL	EE
ASB	3A	032789	TRICHLOROETHYLENE	LT	1.0000	UGL	EE
ASB	3A	032789	TRICHLOROETHYLENE	LT	1.0000	UGL	MA
ASB	3A	032789	TRITIUM		0.4200	PCML	RM
ASB	3A	032789	TRANS-1,2-DICHLOROETHENE	LT	1.0000	UGL	MA
ASB	3A	032789	URANIUM 234		0.9300	PCL	TE
ASB	3A	032789	URANIUM 235	LT	0.0600	PCL	TE

Raw Data for ASB 3A

ASB	3A	032789	1,1-DICHLOROETHYLENE	LT	1.0000	UGL	MA
ASB	3A	032789	1,1,1-TRICHLOROETHANE	LT	1.0000	UGL	EE
ASB	3A	032789	1,1,1-TRICHLOROETHANE	LT	1.0000	UGL	EE
ASB	3A	032789	1,1,1-TRICHLOROETHANE	LT	1.0000	UGL	MA
ASB	3A	032789	ZINC 65	LT	10.0000	PCL	TE
ASB	3A	032789	ZIRCONIUM/NIOBIUM 95		0.0000	PCML	SR
ASB	3A	032789	ZIRCONIUM 95	LT	5.0000	PCL	TE

This Page Intentionally Left Blank.

T-Test Data

This Page Intentionally Left Blank.

T-Test Data dor ASB 3A

OBS	SERIES	WELL	DATE	TESTNAME	VALUE
1	ASB	BKG	12687	ALUMINUM	43.00
2	ASB	BKG	12987	ALUMINUM	35.33
3	ASB	BKG	20789	ALUMINUM	80.00
4	ASB	BKG	22488	ALUMINUM	59.00
5	ASB	BKG	31289	ALUMINUM	46.50
6	ASB	BKG	40687	ALUMINUM	42.50
7	ASB	BKG	51088	ALUMINUM	253.00
8	ASB	BKG	51188	ALUMINUM	314.00
9	ASB	BKG	61886	ALUMINUM	62.00
10	ASB	BKG	72286	ALUMINUM	37.50
11	ASB	BKG	72386	ALUMINUM	45.00
12	ASB	BKG	80487	ALUMINUM	61.00
13	ASB	BKG	81388	ALUMINUM	42.00
14	ASB	BKG	81488	ALUMINUM	43.00
15	ASB	BKG	102888	ALUMINUM	51.00
16	ASB	BKG	110286	ALUMINUM	33.00
17	ASB	BKG	110386	ALUMINUM	37.67
18	ASB	BKG	110888	ALUMINUM	44.00
19	ASB	BKG	121787	ALUMINUM	74.00
20	ASB	BKG	121987	ALUMINUM	79.00
21	ASB	3A	20387	BARIUM	30.00
22	ASB	3A	22585	BARIUM	25.50
23	ASB	3A	32789	BARIUM	19.00
24	ASB	3A	70788	BARIUM	19.00
25	ASB	3A	81584	BARIUM	21.00
26	ASB	3A	102284	BARIUM	20.50
27	ASB	BKG	12687	BARIUM	7.50
28	ASB	BKG	12987	BARIUM	3.33
29	ASB	BKG	20789	BARIUM	5.00
30	ASB	BKG	22488	BARIUM	8.00
31	ASB	BKG	31289	BARIUM	8.50
32	ASB	BKG	51088	BARIUM	7.00
33	ASB	BKG	51188	BARIUM	2.00
34	ASB	BKG	61886	BARIUM	2.00
35	ASB	BKG	72286	BARIUM	4.00
36	ASB	BKG	72386	BARIUM	7.00
37	ASB	BKG	80487	BARIUM	6.50
38	ASB	BKG	81388	BARIUM	2.00
39	ASB	BKG	81488	BARIUM	6.00
40	ASB	BKG	102888	BARIUM	4.00
41	ASB	BKG	110286	BARIUM	2.00
42	ASB	BKG	110386	BARIUM	7.00
43	ASB	BKG	110888	BARIUM	9.00
44	ASB	BKG	121787	BARIUM	14.00
45	ASB	BKG	121987	BARIUM	5.00
46	ASB	BKG	12687	CALCIUM	265.00
47	ASB	BKG	12987	CALCIUM	876.33
48	ASB	BKG	110286	CALCIUM	983.50
49	ASB	BKG	110386	CALCIUM	655.00
50	ASB	3A	12688	CHLORIDE	4000.00
51	ASB	3A	20387	CHLORIDE	5600.00
52	ASB	3A	21286	CHLORIDE	6400.00
53	ASB	3A	22585	CHLORIDE	7280.00
54	ASB	3A	32789	CHLORIDE	4850.00

T-Test Data dor ASB 3A

OBS	SERIES	WELL	DATE	TESTNAME	VALUE
55	ASB	3A	70788	CHLORIDE	4700.00
56	ASB	3A	81584	CHLORIDE	7520.00
57	ASB	3A	102284	CHLORIDE	5300.00
58	ASB	BKG	12687	CHLORIDE	2500.00
59	ASB	BKG	12987	CHLORIDE	2900.00
60	ASB	BKG	20789	CHLORIDE	2200.00
61	ASB	BKG	22488	CHLORIDE	2150.00
62	ASB	BKG	31289	CHLORIDE	2500.00
63	ASB	BKG	51088	CHLORIDE	2450.00
64	ASB	BKG	51188	CHLORIDE	2000.00
65	ASB	BKG	61886	CHLORIDE	4166.67
66	ASB	BKG	72286	CHLORIDE	2270.00
67	ASB	BKG	72386	CHLORIDE	2270.00
68	ASB	BKG	80487	CHLORIDE	2950.00
69	ASB	BKG	81388	CHLORIDE	2400.00
70	ASB	BKG	81488	CHLORIDE	2300.00
71	ASB	BKG	102888	CHLORIDE	2100.00
72	ASB	BKG	110286	CHLORIDE	3400.00
73	ASB	BKG	110386	CHLORIDE	2800.00
74	ASB	BKG	110888	CHLORIDE	2200.00
75	ASB	BKG	121987	CHLORIDE	2400.00
76	ASB	BKG	12687	COPPER	4.50
77	ASB	BKG	12987	COPPER	2.00
78	ASB	BKG	20789	COPPER	11.00
79	ASB	BKG	22488	COPPER	7.50
80	ASB	BKG	31289	COPPER	5.50
81	ASB	BKG	51088	COPPER	6.00
82	ASB	BKG	51188	COPPER	5.00
83	ASB	BKG	61886	COPPER	5.50
84	ASB	BKG	72286	COPPER	6.00
85	ASB	BKG	72386	COPPER	3.00
86	ASB	BKG	80487	COPPER	8.50
87	ASB	BKG	81388	COPPER	2.00
88	ASB	BKG	81488	COPPER	4.00
89	ASB	BKG	102888	COPPER	5.00
90	ASB	BKG	110286	COPPER	9.50
91	ASB	BKG	110386	COPPER	9.00
92	ASB	BKG	110888	COPPER	15.00
93	ASB	BKG	121787	COPPER	15.00
94	ASB	BKG	121987	COPPER	5.00
95	ASB	3A	12688	GROSS ALPHA	12.50
96	ASB	3A	20387	GROSS ALPHA	6.00
97	ASB	3A	21286	GROSS ALPHA	18.00
98	ASB	3A	22585	GROSS ALPHA	15.00
99	ASB	3A	32789	GROSS ALPHA	3.00
100	ASB	3A	70788	GROSS ALPHA	8.00
101	ASB	3A	80287	GROSS ALPHA	3.00
102	ASB	3A	80586	GROSS ALPHA	23.00
103	ASB	3A	81584	GROSS ALPHA	6.00
104	ASB	3A	102284	GROSS ALPHA	1.00
105	ASB	BKG	12687	GROSS ALPHA	7.00
106	ASB	BKG	12987	GROSS ALPHA	1.00
107	ASB	BKG	20789	GROSS ALPHA	1.50
108	ASB	BKG	22488	GROSS ALPHA	14.50

T-Test Data dor ASB 3A

SAS 13:50 Saturday, August 5, 1989 80

OBS	SERIES	WELL	DATE	TESTNAME	VALUE
109	ASB	BKG	31289	GROSS ALPHA	23.750
110	ASB	BKG	40687	GROSS ALPHA	5.250
111	ASB	BKG	61886	GROSS ALPHA	5.750
112	ASB	BKG	72286	GROSS ALPHA	1.500
113	ASB	BKG	72386	GROSS ALPHA	7.000
114	ASB	BKG	80487	GROSS ALPHA	3.750
115	ASB	BKG	110286	GROSS ALPHA	1.500
116	ASB	BKG	110386	GROSS ALPHA	7.500
117	ASB	BKG	121787	GROSS ALPHA	22.000
118	ASB	BKG	121987	GROSS ALPHA	1.000
119	ASB	3A	12688	IRON	55.000
120	ASB	3A	20387	IRON	37.000
121	ASB	3A	21286	IRON	64.000
122	ASB	3A	22585	IRON	43.500
123	ASB	3A	32789	IRON	71.000
124	ASB	3A	70788	IRON	105.000
125	ASB	3A	80287	IRON	57.000
126	ASB	3A	81584	IRON	41.000
127	ASB	3A	102284	IRON	34.500
128	ASB	BKG	12687	IRON	19.500
129	ASB	BKG	12987	IRON	31.500
130	ASB	BKG	61886	IRON	39.000
131	ASB	BKG	72286	IRON	31.500
132	ASB	BKG	72386	IRON	31.333
133	ASB	BKG	80487	IRON	76.500
134	ASB	BKG	110286	IRON	33.500
135	ASB	BKG	110386	IRON	27.667
136	ASB	BKG	121787	IRON	33.000
137	ASB	BKG	121987	IRON	40.000
138	ASB	BKG	12687	LEAD	11.500
139	ASB	BKG	12987	LEAD	8.667
140	ASB	BKG	20789	LEAD	20.000
141	ASB	BKG	22488	LEAD	8.500
142	ASB	BKG	31289	LEAD	3.000
143	ASB	BKG	40687	LEAD	11.000
144	ASB	BKG	51088	LEAD	11.000
145	ASB	BKG	51188	LEAD	9.000
146	ASB	BKG	61886	LEAD	24.500
147	ASB	BKG	72286	LEAD	22.500
148	ASB	BKG	72386	LEAD	28.333
149	ASB	BKG	80487	LEAD	9.500
150	ASB	BKG	81388	LEAD	3.000
151	ASB	BKG	81488	LEAD	3.000
152	ASB	BKG	102888	LEAD	9.500
153	ASB	BKG	110286	LEAD	17.000
154	ASB	BKG	110386	LEAD	17.667
155	ASB	BKG	110888	LEAD	15.000
156	ASB	BKG	121787	LEAD	8.000
157	ASB	BKG	121987	LEAD	9.000
158	ASB	BKG	12687	MAGNESIUM	435.000
159	ASB	BKG	12987	MAGNESIUM	481.000
160	ASB	BKG	110286	MAGNESIUM	485.000
161	ASB	BKG	110386	MAGNESIUM	443.333
162	ASB	3A	12688	MANGANESE	6.000

T-Test Data dor ASB 3A

OBS	SERIES	WELL	DATE	TESTNAME	VALUE
163	ASB	3A	20387	MANGANESE	10.00
164	ASB	3A	21286	MANGANESE	11.00
165	ASB	3A	22585	MANGANESE	6.00
166	ASB	3A	32789	MANGANESE	5.00
167	ASB	3A	70788	MANGANESE	7.00
168	ASB	3A	80287	MANGANESE	10.00
169	ASB	3A	80586	MANGANESE	10.00
170	ASB	3A	81584	MANGANESE	15.00
171	ASB	3A	102284	MANGANESE	12.50
172	ASB	BKG	12687	MANGANESE	3.50
173	ASB	BKG	12987	MANGANESE	19.33
174	ASB	BKG	20789	MANGANESE	17.00
175	ASB	BKG	31289	MANGANESE	3.50
176	ASB	BKG	61886	MANGANESE	14.00
177	ASB	BKG	72286	MANGANESE	24.50
178	ASB	BKG	72386	MANGANESE	5.00
179	ASB	BKG	80487	MANGANESE	11.00
180	ASB	BKG	81388	MANGANESE	13.00
181	ASB	BKG	81488	MANGANESE	3.00
182	ASB	BKG	110286	MANGANESE	21.00
183	ASB	BKG	110386	MANGANESE	5.00
184	ASB	BKG	121787	MANGANESE	14.00
185	ASB	BKG	121987	MANGANESE	15.00
186	ASB	3A	20387	NITRATE AS NITROGEN	70.00
187	ASB	3A	22585	NITRATE AS NITROGEN	250.00
188	ASB	3A	32789	NITRATE AS NITROGEN	363.50
189	ASB	3A	70788	NITRATE AS NITROGEN	190.00
190	ASB	3A	81584	NITRATE AS NITROGEN	250.00
191	ASB	3A	102284	NITRATE AS NITROGEN	250.00
192	ASB	BKG	12687	NITRATE AS NITROGEN	2180.00
193	ASB	BKG	12987	NITRATE AS NITROGEN	1200.00
194	ASB	BKG	20789	NITRATE AS NITROGEN	998.00
195	ASB	BKG	22488	NITRATE AS NITROGEN	1525.00
196	ASB	BKG	31289	NITRATE AS NITROGEN	1990.00
197	ASB	BKG	40687	NITRATE AS NITROGEN	1670.00
198	ASB	BKG	51088	NITRATE AS NITROGEN	1560.00
199	ASB	BKG	51188	NITRATE AS NITROGEN	880.00
200	ASB	BKG	61886	NITRATE AS NITROGEN	1783.33
201	ASB	BKG	72286	NITRATE AS NITROGEN	1190.00
202	ASB	BKG	72386	NITRATE AS NITROGEN	2070.00
203	ASB	BKG	80487	NITRATE AS NITROGEN	1675.00
204	ASB	BKG	81388	NITRATE AS NITROGEN	1080.00
205	ASB	BKG	81488	NITRATE AS NITROGEN	1980.00
206	ASB	BKG	102888	NITRATE AS NITROGEN	1210.00
207	ASB	BKG	110286	NITRATE AS NITROGEN	1170.00
208	ASB	BKG	110386	NITRATE AS NITROGEN	2140.00
209	ASB	BKG	110888	NITRATE AS NITROGEN	2240.00
210	ASB	BKG	121787	NITRATE AS NITROGEN	3040.00
211	ASB	BKG	121987	NITRATE AS NITROGEN	1370.00
212	ASB	3A	12688	NONVOLATILE BETA	9.00
213	ASB	3A	20387	NONVOLATILE BETA	5.00
214	ASB	3A	21286	NONVOLATILE BETA	21.00
215	ASB	3A	22585	NONVOLATILE BETA	11.00
216	ASB	3A	32789	NONVOLATILE BETA	3.00

T-Test Data dor ASB 3A

OBS	SERIES	WELL	DATE	TESTNAME	VALUE
217	ASB	3A	70788	NONVOLATILE BETA	4.0000
218	ASB	3A	81584	NONVOLATILE BETA	1.5000
219	ASB	3A	102284	NONVOLATILE BETA	1.5000
220	ASB	BKG	12687	NONVOLATILE BETA	5.0000
221	ASB	BKG	12987	NONVOLATILE BETA	2.0000
222	ASB	BKG	20789	NONVOLATILE BETA	1.0000
223	ASB	BKG	22488	NONVOLATILE BETA	8.6667
224	ASB	BKG	31289	NONVOLATILE BETA	14.2500
225	ASB	BKG	40687	NONVOLATILE BETA	4.5000
226	ASB	BKG	61886	NONVOLATILE BETA	4.0000
227	ASB	BKG	72286	NONVOLATILE BETA	1.0000
228	ASB	BKG	72386	NONVOLATILE BETA	4.0000
229	ASB	BKG	80487	NONVOLATILE BETA	3.0000
230	ASB	BKG	110286	NONVOLATILE BETA	1.0000
231	ASB	BKG	110386	NONVOLATILE BETA	5.5000
232	ASB	BKG	121787	NONVOLATILE BETA	14.0000
233	ASB	BKG	121987	NONVOLATILE BETA	3.0000
234	ASB	3A	12688	PH	5.0000
235	ASB	3A	20387	PH	6.0000
236	ASB	3A	21286	PH	5.0000
237	ASB	3A	22585	PH	5.0000
238	ASB	3A	32789	PH	5.0000
239	ASB	3A	40588	PH	6.0000
240	ASB	3A	41686	PH	5.0000
241	ASB	3A	42385	PH	5.0000
242	ASB	3A	42587	PH	6.0000
243	ASB	3A	70788	PH	6.0000
244	ASB	3A	80287	PH	6.0000
245	ASB	3A	80586	PH	5.0000
246	ASB	3A	81385	PH	5.0000
247	ASB	3A	81584	PH	5.0000
248	ASB	3A	100288	PH	6.0000
249	ASB	3A	101286	PH	5.0000
250	ASB	3A	101887	PH	6.0000
251	ASB	3A	102284	PH	5.0000
252	ASB	3A	102985	PH	5.0000
253	ASB	BKG	12687	PH	5.0000
254	ASB	BKG	12987	PH	4.0000
255	ASB	BKG	20789	PH	5.0000
256	ASB	BKG	22488	PH	5.0000
257	ASB	BKG	31289	PH	4.0000
258	ASB	BKG	40687	PH	4.5000
259	ASB	BKG	51088	PH	4.0000
260	ASB	BKG	51188	PH	5.0000
261	ASB	BKG	61886	PH	5.0000
262	ASB	BKG	72286	PH	5.0000
263	ASB	BKG	72386	PH	5.0000
264	ASB	BKG	80487	PH	5.0000
265	ASB	BKG	81388	PH	5.0000
266	ASB	BKG	81488	PH	4.0000
267	ASB	BKG	90687	PH	5.0000
268	ASB	BKG	90887	PH	5.0000
269	ASB	BKG	102888	PH	5.0000
270	ASB	BKG	110286	PH	4.0000

T-Test Data dor ASB 3A

OBS	SERIES	WELL	DATE	TESTNAME	VALUE
271	ASB	BKG	110386	PH	4
272	ASB	BKG	110888	PH	5
273	ASB	BKG	121787	PH	4
274	ASB	BKG	121987	PH	5
275	ASB	3A	12688	SODIUM	2720
276	ASB	3A	20387	SODIUM	2870
277	ASB	3A	21286	SODIUM	4260
278	ASB	3A	22585	SODIUM	3045
279	ASB	3A	32789	SODIUM	4050
280	ASB	3A	42385	SODIUM	2518
281	ASB	3A	70788	SODIUM	3050
282	ASB	3A	80287	SODIUM	2430
283	ASB	3A	81385	SODIUM	2200
284	ASB	3A	81584	SODIUM	3580
285	ASB	3A	101286	SODIUM	3170
286	ASB	3A	102284	SODIUM	2905
287	ASB	3A	102985	SODIUM	3380
288	ASB	BKG	12687	SODIUM	4475
289	ASB	BKG	12987	SODIUM	1990
290	ASB	BKG	20789	SODIUM	1740
291	ASB	BKG	22488	SODIUM	2610
292	ASB	BKG	31289	SODIUM	2530
293	ASB	BKG	40687	SODIUM	2840
294	ASB	BKG	51088	SODIUM	3700
295	ASB	BKG	51188	SODIUM	1680
296	ASB	BKG	61886	SODIUM	2620
297	ASB	BKG	72286	SODIUM	1935
298	ASB	BKG	72386	SODIUM	4330
299	ASB	BKG	80487	SODIUM	2620
300	ASB	BKG	81388	SODIUM	1630
301	ASB	BKG	81488	SODIUM	3360
302	ASB	BKG	102888	SODIUM	1730
303	ASB	BKG	110286	SODIUM	1725
304	ASB	BKG	110386	SODIUM	3880
305	ASB	BKG	110888	SODIUM	3280
306	ASB	BKG	121787	SODIUM	3460
307	ASB	BKG	121987	SODIUM	1660
308	ASB	3A	12688	SPECIFIC CONDUCTANCE	35
309	ASB	3A	20387	SPECIFIC CONDUCTANCE	53
310	ASB	3A	21286	SPECIFIC CONDUCTANCE	38
311	ASB	3A	22585	SPECIFIC CONDUCTANCE	70
312	ASB	3A	32789	SPECIFIC CONDUCTANCE	43
313	ASB	3A	40588	SPECIFIC CONDUCTANCE	44
314	ASB	3A	41686	SPECIFIC CONDUCTANCE	51
315	ASB	3A	42385	SPECIFIC CONDUCTANCE	42
316	ASB	3A	42587	SPECIFIC CONDUCTANCE	44
317	ASB	3A	70788	SPECIFIC CONDUCTANCE	40
318	ASB	3A	80287	SPECIFIC CONDUCTANCE	37
319	ASB	3A	80586	SPECIFIC CONDUCTANCE	48
320	ASB	3A	81385	SPECIFIC CONDUCTANCE	45
321	ASB	3A	81584	SPECIFIC CONDUCTANCE	79
322	ASB	3A	100288	SPECIFIC CONDUCTANCE	54
323	ASB	3A	101286	SPECIFIC CONDUCTANCE	55
324	ASB	3A	101887	SPECIFIC CONDUCTANCE	39

T-Test Data dor ASB 3A

OBS	SERIES	WELL	DATE	TESTNAME	VALUE
325	ASB	3A	102284	SPECIFIC CONDUCTANCE	92.0
326	ASB	3A	102985	SPECIFIC CONDUCTANCE	35.0
327	ASB	BKG	12687	SPECIFIC CONDUCTANCE	19.0
328	ASB	BKG	12987	SPECIFIC CONDUCTANCE	28.0
329	ASB	BKG	20789	SPECIFIC CONDUCTANCE	28.0
330	ASB	BKG	22488	SPECIFIC CONDUCTANCE	31.5
331	ASB	BKG	31289	SPECIFIC CONDUCTANCE	35.0
332	ASB	BKG	40687	SPECIFIC CONDUCTANCE	30.0
333	ASB	BKG	51088	SPECIFIC CONDUCTANCE	38.0
334	ASB	BKG	51188	SPECIFIC CONDUCTANCE	24.0
335	ASB	BKG	61886	SPECIFIC CONDUCTANCE	26.0
336	ASB	BKG	72286	SPECIFIC CONDUCTANCE	26.0
337	ASB	BKG	72386	SPECIFIC CONDUCTANCE	40.0
338	ASB	BKG	80487	SPECIFIC CONDUCTANCE	31.0
339	ASB	BKG	81388	SPECIFIC CONDUCTANCE	25.0
340	ASB	BKG	81488	SPECIFIC CONDUCTANCE	36.0
341	ASB	BKG	90687	SPECIFIC CONDUCTANCE	29.0
342	ASB	BKG	90887	SPECIFIC CONDUCTANCE	38.0
343	ASB	BKG	102888	SPECIFIC CONDUCTANCE	25.0
344	ASB	BKG	110286	SPECIFIC CONDUCTANCE	32.0
345	ASB	BKG	110386	SPECIFIC CONDUCTANCE	43.0
346	ASB	BKG	110888	SPECIFIC CONDUCTANCE	35.0
347	ASB	BKG	121787	SPECIFIC CONDUCTANCE	28.0
348	ASB	BKG	121987	SPECIFIC CONDUCTANCE	20.0
349	ASB	3A	20387	TOTAL DISSOLVED SOLIDS	20000.0
350	ASB	3A	32789	TOTAL DISSOLVED SOLIDS	31000.0
351	ASB	3A	81584	TOTAL DISSOLVED SOLIDS	40000.0
352	ASB	3A	102284	TOTAL DISSOLVED SOLIDS	16000.0
353	ASB	BKG	12687	TOTAL DISSOLVED SOLIDS	22000.0
354	ASB	BKG	12987	TOTAL DISSOLVED SOLIDS	32000.0
355	ASB	BKG	20789	TOTAL DISSOLVED SOLIDS	2500.0
356	ASB	BKG	22488	TOTAL DISSOLVED SOLIDS	24000.0
357	ASB	BKG	31289	TOTAL DISSOLVED SOLIDS	23000.0
358	ASB	BKG	40687	TOTAL DISSOLVED SOLIDS	28400.0
359	ASB	BKG	51088	TOTAL DISSOLVED SOLIDS	40000.0
360	ASB	BKG	51188	TOTAL DISSOLVED SOLIDS	26000.0
361	ASB	BKG	80487	TOTAL DISSOLVED SOLIDS	64000.0
362	ASB	BKG	81388	TOTAL DISSOLVED SOLIDS	28000.0
363	ASB	BKG	81488	TOTAL DISSOLVED SOLIDS	31000.0
364	ASB	BKG	102888	TOTAL DISSOLVED SOLIDS	112000.0
365	ASB	BKG	110888	TOTAL DISSOLVED SOLIDS	59000.0
366	ASB	BKG	121787	TOTAL DISSOLVED SOLIDS	9000.0
367	ASB	BKG	121987	TOTAL DISSOLVED SOLIDS	52000.0
368	ASB	3A	12688	TOTAL ORGANIC CARBON	500.0
369	ASB	3A	20387	TOTAL ORGANIC CARBON	500.0
370	ASB	3A	21286	TOTAL ORGANIC CARBON	500.0
371	ASB	3A	22585	TOTAL ORGANIC CARBON	295.0
372	ASB	3A	32789	TOTAL ORGANIC CARBON	2300.0
373	ASB	3A	42385	TOTAL ORGANIC CARBON	536.0
374	ASB	3A	70788	TOTAL ORGANIC CARBON	500.0
375	ASB	3A	80287	TOTAL ORGANIC CARBON	2000.0
376	ASB	3A	80586	TOTAL ORGANIC CARBON	3000.0
377	ASB	3A	81385	TOTAL ORGANIC CARBON	350.0
378	ASB	3A	81584	TOTAL ORGANIC CARBON	2500.0

T-Test Data dor ASB 3A

OBS	SERIES	WELL	DATE	TESTNAME	VALUE
379	ASB	3A	102284	TOTAL ORGANIC CARBON	2500.00
380	ASB	3A	102985	TOTAL ORGANIC CARBON	435.00
381	ASB	3A	20387	TOTAL PHOSPHATES	30.00
382	ASB	3A	32789	TOTAL PHOSPHATES	29.00
383	ASB	3A	70788	TOTAL PHOSPHATES	20.00
384	ASB	BKG	12687	TOTAL PHOSPHATES	30.00
385	ASB	BKG	12987	TOTAL PHOSPHATES	40.00
386	ASB	BKG	20789	TOTAL PHOSPHATES	10.00
387	ASB	BKG	31289	TOTAL PHOSPHATES	13.67
388	ASB	BKG	40687	TOTAL PHOSPHATES	10.00
389	ASB	BKG	51088	TOTAL PHOSPHATES	30.00
390	ASB	BKG	51188	TOTAL PHOSPHATES	40.00
391	ASB	BKG	61886	TOTAL PHOSPHATES	9.50
392	ASB	BKG	72286	TOTAL PHOSPHATES	39.00
393	ASB	BKG	72386	TOTAL PHOSPHATES	42.00
394	ASB	BKG	80487	TOTAL PHOSPHATES	15.00
395	ASB	BKG	81388	TOTAL PHOSPHATES	10.00
396	ASB	BKG	81488	TOTAL PHOSPHATES	10.00
397	ASB	BKG	102888	TOTAL PHOSPHATES	10.00
398	ASB	BKG	110286	TOTAL PHOSPHATES	39.50
399	ASB	BKG	110386	TOTAL PHOSPHATES	37.00
400	ASB	BKG	110888	TOTAL PHOSPHATES	60.00
401	ASB	BKG	121787	TOTAL PHOSPHATES	70.00
402	ASB	BKG	121987	TOTAL PHOSPHATES	100.00
403	ASB	3A	12688	TOTAL RADIUM	3.50
404	ASB	3A	20387	TOTAL RADIUM	5.00
405	ASB	3A	21286	TOTAL RADIUM	11.00
406	ASB	3A	22585	TOTAL RADIUM	4.00
407	ASB	3A	32789	TOTAL RADIUM	1.00
408	ASB	3A	70788	TOTAL RADIUM	3.00
409	ASB	3A	80287	TOTAL RADIUM	5.00
410	ASB	3A	80586	TOTAL RADIUM	6.00
411	ASB	3A	81584	TOTAL RADIUM	6.00
412	ASB	3A	102284	TOTAL RADIUM	0.50
413	ASB	BKG	12687	TOTAL RADIUM	7.00
414	ASB	BKG	12987	TOTAL RADIUM	0.50
415	ASB	BKG	20789	TOTAL RADIUM	1.00
416	ASB	BKG	22488	TOTAL RADIUM	4.83
417	ASB	BKG	31289	TOTAL RADIUM	12.00
418	ASB	BKG	40687	TOTAL RADIUM	4.25
419	ASB	BKG	51088	TOTAL RADIUM	6.00
420	ASB	BKG	51188	TOTAL RADIUM	0.50
421	ASB	BKG	61886	TOTAL RADIUM	4.50
422	ASB	BKG	72286	TOTAL RADIUM	1.00
423	ASB	BKG	72386	TOTAL RADIUM	9.00
424	ASB	BKG	80487	TOTAL RADIUM	3.50
425	ASB	BKG	81388	TOTAL RADIUM	1.00
426	ASB	BKG	81488	TOTAL RADIUM	7.00
427	ASB	BKG	102888	TOTAL RADIUM	0.50
428	ASB	BKG	110286	TOTAL RADIUM	0.50
429	ASB	BKG	110386	TOTAL RADIUM	7.50
430	ASB	BKG	110888	TOTAL RADIUM	6.00
431	ASB	BKG	121787	TOTAL RADIUM	6.00
432	ASB	BKG	121987	TOTAL RADIUM	0.00

T-Test Data dor ASB 3A

OBS	SERIES	WELL	DATE	TESTNAME	VALUE
433	ASB	BKG	40687	TURBIDITY	0.000
434	ASB	BKG	61886	TURBIDITY	0.667
435	ASB	BKG	80487	TURBIDITY	0.500
436	ASB	BKG	121787	TURBIDITY	0.000
437	ASB	BKG	121987	TURBIDITY	0.000
438	ASB	3A	20387	ZINC	2.000
439	ASB	3A	41686	ZINC	19.000
440	ASB	3A	81584	ZINC	42.000
441	ASB	3A	102284	ZINC	301.000
442	ASB	BKG	12687	ZINC	7.000
443	ASB	BKG	12987	ZINC	8.667
444	ASB	BKG	20789	ZINC	17.000
445	ASB	BKG	31289	ZINC	11.000
446	ASB	BKG	51088	ZINC	6.000
447	ASB	BKG	51188	ZINC	11.000
448	ASB	BKG	61886	ZINC	9.750
449	ASB	BKG	72286	ZINC	15.500
450	ASB	BKG	72386	ZINC	2.000
451	ASB	BKG	80487	ZINC	46.500
452	ASB	BKG	81388	ZINC	49.000
453	ASB	BKG	81488	ZINC	24.000
454	ASB	BKG	102888	ZINC	44.000
455	ASB	BKG	110286	ZINC	8.000
456	ASB	BKG	110386	ZINC	11.333
457	ASB	BKG	110888	ZINC	12.000
458	ASB	BKG	121787	ZINC	54.000
459	ASB	BKG	121987	ZINC	17.000

This Page Intentionally Left Blank.

Statistical Comparison Results

This Page Intentionally Left Blank.

TTEST PROCEDURE

********** TESTNAME=BARIUM **********

Variable: VALUE

WELL	N	Mean	Std Dev	Std Error	Minimum	Maximum
3A	6	22.50000000	4.38178046	1.78885438	19.00000000	30.00000000
BKG	19	5.78070175	3.06365222	0.70285002	2.00000000	14.00000000

Variances	T	Method	DF	Prob>|T|
Unequal	8.6990	Satterthwaite	6.6	0.0001
		Cochran	.	0.0002
Equal	10.5192		23.0	0.0000

For H0: Variances are equal, F' = 2.05 DF = (5,18) Prob>F' = 0.2408

********** TESTNAME=CHLORIDE **********

Variable: VALUE

WELL	N	Mean	Std Dev	Std Error	Minimum	Maximum
3A	8	5706.250000	1258.172569	444.8311778	4000.000000	7520.000000
BKG	18	2553.148148	535.242260	126.1578107	2000.000000	4166.666667

Variances	T	Method	DF	Prob>|T|
Unequal	6.8194	Satterthwaite	8.1	0.0001
		Cochran	.	0.0002
Equal	9.1021		24.0	0.0000

For H0: Variances are equal, F' = 5.53 DF = (7,17) Prob>F' = 0.0038

********** TESTNAME=GROSS ALPHA **********

Variable: VALUE

WELL	N	Mean	Std Dev	Std Error	Minimum	Maximum
3A	10	9.55000000	7.28182669	2.30271579	1.00000000	23.00000000
BKG	14	7.35714286	7.53562965	2.01398174	1.00000000	23.75000000

Variances	T	Method	DF	Prob>|T|
Unequal	0.7168	Satterthwaite	20.0	0.4818
		Cochran	.	0.4893
Equal	0.7125		22.0	0.4836

For H0: Variances are equal, F' = 1.07 DF = (13,9) Prob>F' = 0.9431

********** TESTNAME=IRON **********

Variable: VALUE

WELL	N	Mean	Std Dev	Std Error	Minimum	Maximum
3A	9	56.44444444	22.06445734	7.35481911	34.50000000	105.0000000
BKG	10	36.35000000	15.21420105	4.81115281	19.50000000	76.5000000

Variances	T	Method	DF	Prob>|T|
Unequal	2.2864	Satterthwaite	14.0	0.0383
		Cochran	.	0.0505
Equal	2.3322		17.0	0.0322

For H0: Variances are equal, F' = 2.10 DF = (8,9) Prob>F' = 0.2890

********** TESTNAME=MANGANESE **********

Variable: VALUE

WELL	N	Mean	Std Dev	Std Error	Minimum	Maximum
3A	10	9.25000000	3.20806276	1.01447852	5.00000000	15.00000000
BKG	14	12.05952381	7.11703360	1.90210724	3.00000000	24.50000000

Variances	T	Method	DF	Prob>|T|
Unequal	-1.3033	Satterthwaite	19.2	0.2079
		Cochran	.	0.2173
Equal	-1.1613		22.0	0.2580

For H0: Variances are equal, F' = 4.92 DF = (13,9) Prob>F' = 0.0219

********** TESTNAME=NITRATE AS NITROGEN **********

Variable: VALUE

WELL	N	Mean	Std Dev	Std Error	Minimum	Maximum
3A	6	228.916667	96.1407389	39.2492923	70.0000000	363.500000
BKG	20	1647.566667	538.2189613	120.3494184	880.0000000	3040.000000

Variances	T	Method	DF	Prob>|T|
Unequal	-11.2068	Satterthwaite	22.3	0.0001
		Cochran	.	0.0001
Equal	-6.3377		24.0	0.0000

For H0: Variances are equal, F' = 31.34 DF = (19,5) Prob>F' = 0.0012

********** TESTNAME=NONVOLATILE BETA **********

Variable: VALUE

WELL	N	Mean	Std Dev	Std Error	Minimum	Maximum
3A	8	7.00000000	6.60627407	2.33567060	1.50000000	21.00000000
BKG	14	5.06547619	4.36284068	1.16601822	1.00000000	14.25000000

Variances	T	Method	DF	Prob>|T|
Unequal	0.7410	Satterthwaite	10.6	0.4748
		Cochran	.	0.4807
Equal	0.8301		20.0	0.4163

For H0: Variances are equal, F' = 2.29 DF = (7,13) Prob>F' = 0.1864

********** TESTNAME=PH **********

Variable: VALUE

WELL	N	Mean	Std Dev	Std Error	Minimum	Maximum
3A	19	5.36842105	0.49559463	0.11369721	5.00000000	6.00000000
BKG	22	4.65909091	0.47274184	0.10078890	4.00000000	5.00000000

Variances	T	Method	DF	Prob>|T|
Unequal	4.6685	Satterthwaite	37.5	0.0001
		Cochran	.	0.0002
Equal	4.6851		39.0	0.0000

For H0: Variances are equal, F' = 1.10 DF = (18,21) Prob>F' = 0.8281

********** TESTNAME=SODIUM **********

Variable: VALUE

WELL	N	Mean	Std Dev	Std Error	Minimum	Maximum
3A	13	3090.615385	605.4701394	167.9272026	2200.000000	4260.000000
BKG	20	2689.750000	939.9376729	210.1764531	1630.000000	4475.000000

Variances	T	Method	DF	Prob>|T|
Unequal	1.4901	Satterthwaite	31.0	0.1463
		Cochran	.	0.1564
Equal	1.3611		31.0	0.1833

For H0: Variances are equal, F' = 2.41 DF = (19,12) Prob>F' = 0.1222

********** TESTNAME=SPECIFIC CONDUCTANCE **********

Variable: VALUE

WELL	N	Mean	Std Dev	Std Error	Minimum	Maximum
3A	19	49.68421053	15.36971276	3.52605393	35.00000000	92.00000000
BKG	22	30.34090909	6.32340016	1.34815344	19.00000000	43.00000000

Variances	T	Method	DF	Prob>|T|
Unequal	5.1241	Satterthwaite	23.2	0.0001
		Cochran	.	0.0001
Equal	5.4053		39.0	0.0000

For H0: Variances are equal, F' = 5.91 DF = (18,21) Prob>F' = 0.0001

********** TESTNAME=TOTAL DISSOLVED SOLIDS **********

Variable: VALUE

WELL	N	Mean	Std Dev	Std Error	Minimum	Maximum
3A	4	26750.00000	10874.28159	5437.140793	16000.00000	40000.0000
BKG	15	36860.00000	26689.90713	6891.304390	2500.00000	112000.0000

Variances	T	Method	DF	Prob>|T|
Unequal	-1.1517	Satterthwaite	13.1	0.2700
		Cochran	.	0.2966
Equal	-0.7289		17.0	0.4760

For H0: Variances are equal, F' = 6.02 DF = (14,3) Prob>F' = 0.1650

********** TESTNAME=TOTAL PHOSPHATES **********

Variable: VALUE

WELL	N	Mean	Std Dev	Std Error	Minimum	Maximum
3A	3	26.33333333	5.50757055	3.17979734	20.00000000	30.0000000
BKG	19	32.40350877	24.45689808	5.61079722	9.50000000	100.0000000

Variances	T	Method	DF	Prob>|T|
Unequal	-0.9412	Satterthwaite	16.3	0.3603
		Cochran	.	0.3854
Equal	-0.4199		20.0	0.6790

For H0: Variances are equal, F' = 19.72 DF = (18,2) Prob>F' = 0.0986

********** TESTNAME=TOTAL RADIUM **********

Variable: VALUE

WELL	N	Mean	Std Dev	Std Error	Minimum	Maximum
3A	10	4.50000000	2.96273147	0.93689795	0.50000000	11.00000000
BKG	20	4.12916667	3.43490798	0.76806877	0.00000000	12.00000000

Variances	T	Method	DF	Prob>|T|
Unequal	0.3061	Satterthwaite	20.7	0.7626
		Cochran	.	0.7650
Equal	0.2910		28.0	0.7732

For H0: Variances are equal, F' = 1.34 DF = (19,9) Prob>F' = 0.6680

********** TESTNAME=ZINC **********

Variable: VALUE

WELL	N	Mean	Std Dev	Std Error	Minimum	Maximum
3A	4	91.00000000	140.9562580	70.47812900	2.00000000	301.0000000
BKG	18	19.65277778	16.6184658	3.91700996	2.00000000	54.0000000

Variances	T	Method	DF	Prob>|T|
Unequal	1.0108	Satterthwaite	3.0	0.3863
		Cochran	.	0.3864
Equal	2.2763		20.0	0.0340

For H0: Variances are equal, F' = 71.94 DF = (3,17) Prob>F' = 0.0000

Groundwater Monitoring Well

ASB 4

This Page Intentionally Left Blank.

Raw Data

This Page Intentionally Left Blank.

Raw DatA for ASB 4

ASB	4	052682	SPECIFIC CONDUCTANCE		109.0000	UMHC	FD
ASB	4	052682	PH		5.7000	PH	FD
ASB	4	081282	SPECIFIC CONDUCTANCE		36.0000	UMHC	FD
ASB	4	081282	PH		5.7000	PH	FD
ASB	4	101982	SPECIFIC CONDUCTANCE		50.0000	UMHC	FD
ASB	4	101982	PH		4.8000	PH	FD
ASB	4	012583	SPECIFIC CONDUCTANCE		40.0000	UMHC	FD
ASB	4	012583	PH		4.8000	PH	FD
ASB	4	041983	SPECIFIC CONDUCTANCE		41.0000	UMHC	FD
ASB	4	041983	PH		4.7000	PH	FD
ASB	4	080683	SPECIFIC CONDUCTANCE		74.0000	UMHC	FD
ASB	4	080683	PH		5.3000	PH	FD
ASB	4	112883	SPECIFIC CONDUCTANCE		26.0000	UMHC	FD
ASB	4	112883	PH		4.9000	PH	FD
ASB	4	030184	SPECIFIC CONDUCTANCE		25.0000	UMHC	FD
ASB	4	030184	PH		5.9000	PH	FD
ASB	4	041184	SPECIFIC CONDUCTANCE		41.0000	UMHC	FD
ASB	4	041184	PH		6.1000	PH	FD
ASB	4	080684	SILVER	LT	2.0000	UGL	EE
ASB	4	080684	SILVER	LT	2.0000	UGL	EE
ASB	4	080684	GROSS ALPHA		7.0000	PCL	CP
ASB	4	080684	ARSENIC	LT	1.0000	UGL	EE
ASB	4	080684	ARSENIC	LT	1.0000	UGL	EE
ASB	4	080684	BARIUM		17.0000	UGL	EE
ASB	4	080684	BARIUM		17.0000	UGL	EE
ASB	4	080684	BERYLLIUM	LT	2.0000	UGL	EE
ASB	4	080684	BERYLLIUM	LT	2.0000	UGL	EE
ASB	4	080684	NONVOLATILE BETA	LT	3.0000	PCL	CP
ASB	4	080684	CADMIUM	LT	2.0000	UGL	EE
ASB	4	080684	CADMIUM	LT	2.0000	UGL	EE
ASB	4	080684	CHLORIDE		4300.0000	UGL	EE
ASB	4	080684	COLOR		15.0000	APC	EE
ASB	4	080684	SPECIFIC CONDUCTANCE		56.0000	UMHC	FD
ASB	4	080684	CHROMIUM		32.0000	UGL	EE
ASB	4	080684	CHROMIUM	LT	4.0000	UGL	EE
ASB	4	080684	COPPER	LT	4.0000	UGL	EE
ASB	4	080684	COPPER	LT	4.0000	UGL	EE
ASB	4	080684	CYANIDE	LT	5.0000	UGL	EE
ASB	4	080684	DISSOLVED ORGANIC CARBON	LT	5000.0000	UGL	EE
ASB	4	080684	ENDRIN	LT	0.0400	UGL	EE
ASB	4	080684	FLUORIDE		130.0000	UGL	EE
ASB	4	080684	IRON		472.0000	UGL	EE
ASB	4	080684	IRON		406.0000	UGL	EE
ASB	4	080684	GC SCAN	LT	40.0000	UGL	EE
ASB	4	080684	MERCURY	LT	0.2000	UGL	EE
ASB	4	080684	LINDANE	LT	1.0000	UGL	EE
ASB	4	080684	METHOXYCHLOR	LT	20.0000	UGL	EE
ASB	4	080684	MANGANESE		40.0000	UGL	EE
ASB	4	080684	MANGANESE		40.0000	UGL	EE
ASB	4	080684	SODIUM		2290.0000	UGL	EE
ASB	4	080684	SODIUM		2220.0000	UGL	EE
ASB	4	080684	NICKEL		24.0000	UGL	EE
ASB	4	080684	NICKEL		18.0000	UGL	EE
ASB	4	080684	NITRITE AS NITROGEN	LT	500.0000	UGL	EE
ASB	4	080684	NITRATE AS NITROGEN	LT	500.0000	UGL	EE
ASB	4	080684	ODOR		0.0000	THON	EE
ASB	4	080684	LEAD	LT	4.0000	UGL	EE
ASB	4	080684	LEAD	LT	4.0000	UGL	EE
ASB	4	080684	PH		5.1000	PH	FD
ASB	4	080684	PHENOLS		12.0000	UGL	EE
ASB	4	080684	SELENIUM	LT	1.0000	UGL	EE
ASB	4	080684	SELENIUM	LT	1.0000	UGL	EE
ASB	4	080684	SULFATE	LT	10000.0000	UGL	EE
ASB	4	080684	SULFIDE	LT	1000.0000	UGL	EE

Raw DatA for ASB 4

ASB	4	080684	SURFACTANTS	LT	10.0000	UGL	EE
ASB	4	080684	SURFACTANTS	LT	10.0000	UGL	EE
ASB	4	080684	TOTAL DISSOLVED SOLIDS		3542000.0000	UGL	EE
ASB	4	080684	TOTAL ORGANIC CARBON	LT	5000.0000	UGL	EE
ASB	4	080684	TOTAL RADIUM		4.0000	PCL	CP
ASB	4	080684	TOTAL ORGANIC HALOGENS		11.0000	UGL	MM
ASB	4	080684	TURBIDITY		34.0000	TU	EE
ASB	4	080684	TOXAPHENE	LT	1.0000	UGL	EE
ASB	4	080684	ZINC		86.0000	UGL	EE
ASB	4	080684	ZINC		88.0000	UGL	EE
ASB	4	102284	SILVER	LT	2.0000	UGL	EE
ASB	4	102284	GROSS ALPHA		8.0000	PCL	CP
ASB	4	102284	ARSENIC	LT	1.0000	UGL	EE
ASB	4	102284	BARIUM		20.0000	UGL	EE
ASB	4	102284	BERYLLIUM	LT	2.0000	UGL	EE
ASB	4	102284	NONVOLATILE BETA	LT	3.0000	PCL	CP
ASB	4	102284	CADMIUM	LT	2.0000	UGL	EE
ASB	4	102284	CHLORIDE		4700.0000	UGL	EE
ASB	4	102284	COLOR		165.0000	APC	EE
ASB	4	102284	SPECIFIC CONDUCTANCE		84.0000	UMHC	FD
ASB	4	102284	CORROSIVITY		0.0039	MMY	EE
ASB	4	102284	CHROMIUM	LT	4.0000	UGL	EE
ASB	4	102284	COPPER		7.0000	UGL	EE
ASB	4	102284	CYANIDE	LT	5.0000	UGL	EE
ASB	4	102284	DISSOLVED ORGANIC CARBON	LT	5000.0000	UGL	EE
ASB	4	102284	ENDRIN	LT	0.0400	UGL	EE
ASB	4	102284	FLUORIDE	LT	100.0000	UGL	EE
ASB	4	102284	IRON		1690.0000	UGL	EE
ASB	4	102284	GC SCAN		196.0000	UGL	EE
ASB	4	102284	MERCURY	LT	0.2000	UGL	EE
ASB	4	102284	LINDANE	LT	1.0000	UGL	EE
ASB	4	102284	METHOXYCHLOR	LT	20.0000	UGL	EE
ASB	4	102284	MANGANESE		29.0000	UGL	EE
ASB	4	102284	SODIUM		1970.0000	UGL	EE
ASB	4	102284	NICKEL		25.0000	UGL	EE
ASB	4	102284	NITRITE AS NITROGEN	LT	500.0000	UGL	EE
ASB	4	102284	NITRATE AS NITROGEN	LT	500.0000	UGL	EE
ASB	4	102284	ODOR		4.0000	THON	EE
ASB	4	102284	LEAD		10.0000	UGL	EE
ASB	4	102284	PH		4.7000	PH	FD
ASB	4	102284	PHENOLS	LT	2.0000	UGL	EE
ASB	4	102284	SELENIUM	LT	1.0000	UGL	EE
ASB	4	102284	SILVEX	LT	2.0000	UGL	EE
ASB	4	102284	SULFATE	LT	5000.0000	UGL	EE
ASB	4	102284	SULFIDE	LT	1000.0000	UGL	EE
ASB	4	102284	SURFACTANTS	LT	10.0000	UGL	EE
ASB	4	102284	TOTAL DISSOLVED SOLIDS		70000.0000	UGL	EE
ASB	4	102284	TOTAL ORGANIC CARBON	LT	5000.0000	UGL	EE
ASB	4	102284	TOTAL RADIUM		6.0000	PCL	CP
ASB	4	102284	TOTAL ORGANIC HALOGENS		16.0000	UGL	MM
ASB	4	102284	TURBIDITY		60.0000	TU	EE
ASB	4	102284	TOXAPHENE	LT	1.0000	UGL	EE
ASB	4	102284	2,4-DICHLOROPHENOXYACETIC ACID	LT	20.0000	UGL	EE
ASB	4	102284	ZINC		82.0000	UGL	EE
ASB	4	022785	SILVER	LT	2.0000	UGL	EE
ASB	4	022785	GROSS ALPHA		6.0000	PCL	CP
ASB	4	022785	ARSENIC	LT	1.0000	UGL	EE
ASB	4	022785	BARIUM		18.0000	UGL	EE
ASB	4	022785	NONVOLATILE BETA		4.0000	PCL	CP
ASB	4	022785	CADMIUM	LT	2.0000	UGL	EE
ASB	4	022785	CHLORIDE		3400.0000	UGL	EE
ASB	4	022785	SPECIFIC CONDUCTANCE		69.0000	UMHC	FD
ASB	4	022785	CHROMIUM	LT	4.0000	UGL	EE
ASB	4	022785	ENDRIN	LT	0.0400	UGL	EE

Raw DatA for ASB 4

ASB	4	022785	FLUORIDE	LT	100.0000	UGL	EE
ASB	4	022785	IRON		445.0000	UGL	EE
ASB	4	022785	MERCURY		0.2900	UGL	EE
ASB	4	022785	LINDANE	LT	1.0000	UGL	EE
ASB	4	022785	METHOXYCHLOR	LT	20.0000	UGL	EE
ASB	4	022785	MANGANESE		13.0000	UGL	EE
ASB	4	022785	SODIUM		2290.0000	UGL	EE
ASB	4	022785	NITRATE AS NITROGEN	LT	500.0000	UGL	EE
ASB	4	022785	LEAD		9.0000	UGL	EE
ASB	4	022785	PH		5.3000	PH	FD
ASB	4	022785	PHENOLS	LT	2.0000	UGL	EE
ASB	4	022785	SELENIUM	LT	1.0000	UGL	EE
ASB	4	022785	SILVEX	LT	2.0000	UGL	EE
ASB	4	022785	SULFATE		5000.0000	UGL	EE
ASB	4	022785	TOTAL ORGANIC CARBON		4360.0000	UGL	EE
ASB	4	022785	TOTAL ORGANIC CARBON		4380.0000	UGL	EE
ASB	4	022785	TOTAL RADIUM		4.0000	PCL	CP
ASB	4	022785	TOTAL ORGANIC HALOGENS		10.6000	UGL	EE
ASB	4	022785	TURBIDITY		15.0000	TU	EE
ASB	4	022785	TOXAPHENE	LT	1.0000	UGL	EE
ASB	4	022785	2,4-DICHLOROPHENOXYACETIC ACID	LT	20.0000	UGL	EE
ASB	4	042385	SPECIFIC CONDUCTANCE		50.0000	UMHC	FD
ASB	4	042385	CHROMIUM	LT	4.0000	UGL	EE
ASB	4	042385	CHROMIUM	LT	4.0000	UGL	EE
ASB	4	042385	MERCURY	LT	0.2000	UGL	EE
ASB	4	042385	SODIUM		1756.0000	UGL	EE
ASB	4	042385	SODIUM		1804.0000	UGL	EE
ASB	4	042385	LEAD		6.0000	UGL	EE
ASB	4	042385	LEAD		6.0000	UGL	EE
ASB	4	042385	PH		5.4000	PH	FD
ASB	4	042385	TOTAL ORGANIC CARBON		4450.0000	UGL	EE
ASB	4	042385	TOTAL ORGANIC CARBON		4020.0000	UGL	EE
ASB	4	042385	TOTAL ORGANIC HALOGENS		10.9000	UGL	EE
ASB	4	071585	SPECIFIC CONDUCTANCE		42.0000	UMHC	FD
ASB	4	071585	CHROMIUM	LT	4.0000	UGL	EE
ASB	4	071585	MERCURY	LT	0.2000	UGL	EE
ASB	4	071585	SODIUM		2090.0000	UGL	EE
ASB	4	071585	LEAD		11.0000	UGL	EE
ASB	4	071585	PH		5.0000	PH	FD
ASB	4	071585	TOTAL ORGANIC CARBON		4080.0000	UGL	EE
ASB	4	071585	TOTAL ORGANIC HALOGENS		26.0000	UGL	EE
ASB	4	102985	SPECIFIC CONDUCTANCE		38.0000	UMHC	FD
ASB	4	102985	SPECIFIC CONDUCTANCE		201.0000	UMHC	EE
ASB	4	102985	CHROMIUM	LT	4.0000	UGL	EE
ASB	4	102985	MERCURY	LT	0.2000	UGL	EE
ASB	4	102985	SODIUM		2550.0000	UGL	EE
ASB	4	102985	LEAD		11.0000	UGL	EE
ASB	4	102985	PH		4.8000	PH	FD
ASB	4	102985	PH		5.5000	PH	EE
ASB	4	102985	TOTAL ORGANIC CARBON		900.0000	UGL	EE
ASB	4	102985	TOTAL ORGANIC HALOGENS		61.0000	UGL	EE
ASB	4	021186	GROSS ALPHA		12.0000	PCL	CP
ASB	4	021186	NONVOLATILE BETA		9.0000	PCL	CP
ASB	4	021186	CHLORIDE		5200.0000	UGL	EE
ASB	4	021186	SPECIFIC CONDUCTANCE		43.0000	UMHC	FD
ASB	4	021186	IRON		366.0000	UGL	EE
ASB	4	021186	MERCURY	LT	0.2000	UGL	EE
ASB	4	021186	MERCURY	LT	0.2000	UGL	EE
ASB	4	021186	MANGANESE		18.0000	UGL	EE
ASB	4	021186	SODIUM		2350.0000	UGL	EE
ASB	4	021186	SODIUM		2350.0000	UGL	EE
ASB	4	021186	PH		5.1000	PH	FD
ASB	4	021186	PHENOLS	LT	2.0000	UGL	EE
ASB	4	021186	SULFATE		8000.0000	UGL	EE

ASB	4	021186	TOTAL ORGANIC CARBON		14500.0000	UGL	EE
ASB	4	021186	TOTAL RADIUM		6.0000	PCL	CP
ASB	4	021186	TOTAL ORGANIC HALOGENS		71.0000	UGL	EE
ASB	4	041686	SPECIFIC CONDUCTANCE		47.0000	UMHC	FD
ASB	4	041686	CHROMIUM	LT	4.0000	UGL	EE
ASB	4	041686	NICKEL		11.0000	UGL	EE
ASB	4	041686	LEAD		8.0000	UGL	EE
ASB	4	041686	PH		5.2000	PH	FD
ASB	4	041686	ZINC		53.0000	UGL	EE
ASB	4	080486	GROSS ALPHA		3.7000	PCL	EE
ASB	4	080486	SPECIFIC CONDUCTANCE		58.0000	UMHC	FD
ASB	4	080486	CHROMIUM	LT	4.0000	UGL	EE
ASB	4	080486	MANGANESE		9.0000	UGL	EE
ASB	4	080486	LEAD		10.0000	UGL	EE
ASB	4	080486	PH		5.5000	PH	FD
ASB	4	080486	TOTAL ORGANIC CARBON		2000.0000	UGL	EE
ASB	4	080486	TOTAL RADIUM		3.8000	PCL	EE
ASB	4	080486	TOTAL ORGANIC HALOGENS		25.0000	UGL	EE
ASB	4	101286	BROMODICHLOROMETHANE	LT	5.0000	UGL	EE
ASB	4	101286	TRICHLOROFLUOROMETHANE	LT	5.0000	UGL	EE
ASB	4	101286	CARBON TETRACHLORIDE	LT	5.0000	UGL	EE
ASB	4	101286	BROMOFORM	LT	10.0000	UGL	EE
ASB	4	101286	CHLOROFORM	LT	5.0000	UGL	EE
ASB	4	101286	BROMOMETHANE	LT	10.0000	UGL	EE
ASB	4	101286	CHLOROMETHANE	LT	10.0000	UGL	EE
ASB	4	101286	CHLOROBENZENE	LT	5.0000	UGL	EE
ASB	4	101286	SPECIFIC CONDUCTANCE		50.0000	UMHC	FD
ASB	4	101286	CHROMIUM	LT	4.0000	UGL	EE
ASB	4	101286	CHLOROETHENE	LT	10.0000	UGL	EE
ASB	4	101286	CHLOROETHANE	LT	10.0000	UGL	EE
ASB	4	101286	BENZENE	LT	5.0000	UGL	EE
ASB	4	101286	DIBROMOCHLOROMETHANE	LT	5.0000	UGL	EE
ASB	4	101286	ETHYLBENZENE		14.0000	UGL	EE
ASB	4	101286	TOLUENE-D8		93.0000	PER	EE
ASB	4	101286	TOLUENE	LT	5.0000	UGL	EE
ASB	4	101286	SODIUM		3250.0000	UGL	EE
ASB	4	101286	P-BROMOFLUOROBENZENE		105.0000	PER	EE
ASB	4	101286	PH		5.0000	PH	FD
ASB	4	101286	1,1,2,2-TETRACHLOROETHANE	LT	10.0000	UGL	EE
ASB	4	101286	TETRACHLOROETHYLENE	LT	5.0000	UGL	EE
ASB	4	101286	TOTAL ORGANIC HALOGENS		15.5000	UGL	EE
ASB	4	101286	TRICHLOROETHYLENE		22.0000	UGL	EE
ASB	4	101286	TRANS-1,2-DICHLOROETHENE		6.0000	UGL	EE
ASB	4	101286	1,1-DICHLOROETHYLENE	LT	5.0000	UGL	EE
ASB	4	101286	1,1-DICHLOROETHANE	LT	5.0000	UGL	EE
ASB	4	101286	1,1,1-TRICHLOROETHANE	LT	5.0000	UGL	EE
ASB	4	101286	1,1,2-TRICHLOROETHANE	LT	5.0000	UGL	EE
ASB	4	101286	1,2-DICHLOROETHANE-D4		98.0000	PER	EE
ASB	4	101286	1,2-DICHLOROETHANE	LT	1.0000	UGL	EE
ASB	4	101286	1,2-DICHLOROPROPANE	LT	10.0000	UGL	EE
ASB	4	101286	CIS-1,3-DICHLOROPROPENE	LT	5.0000	UGL	EE
ASB	4	101286	TRANS-1,3-DICHLOROPROPENE	LT	5.0000	UGL	EE
ASB	4	101286	2-CHLOROETHYLVINYL ETHER	LT	10.0000	UGL	EE
ASB	4	020787	SILVER	LT	2.0000	UGL	EE
ASB	4	020787	SILVER	LT	2.0000	UGL	EE
ASB	4	020787	GROSS ALPHA		3.0000	PCL	RM
ASB	4	020787	ARSENIC	LT	2.0000	UGL	EE
ASB	4	020787	BARIUM		16.0000	UGL	EE
ASB	4	020787	BARIUM		17.0000	UGL	EE
ASB	4	020787	NONVOLATILE BETA		3.0000	PCL	RM
ASB	4	020787	CALCIUM		2040.0000	UGL	EE
ASB	4	020787	CALCIUM		2040.0000	UGL	EE
ASB	4	020787	CARBON TETRACHLORIDE	LT	1.0000	UGL	EE
ASB	4	020787	CADMIUM	LT	2.0000	UGL	EE

Raw DatA for ASB 4

ASB	4	020787	CADMIUM	LT	2.0000	UGL	EE
ASB	4	020787	CHLOROFORM	LT	1.0000	UGL	EE
ASB	4	020787	CHLORIDE		5300.0000	UGL	EE
ASB	4	020787	SPECIFIC CONDUCTANCE		60.0000	UMHC	FD
ASB	4	020787	CHROMIUM	LT	4.0000	UGL	EE
ASB	4	020787	CHROMIUM	LT	4.0000	UGL	EE
ASB	4	020787	COPPER		18.0000	UGL	EE
ASB	4	020787	COPPER		20.0000	UGL	EE
ASB	4	020787	FLUORIDE	LT	100.0000	UGL	EE
ASB	4	020787	IRON		105.0000	UGL	EE
ASB	4	020787	IRON		108.0000	UGL	EE
ASB	4	020787	MERCURY	LT	0.2000	UGL	EE
ASB	4	020787	POTASSIUM		730.0000	UGL	EE
ASB	4	020787	POTASSIUM		750.0000	UGL	EE
ASB	4	020787	MAGNESIUM		1350.0000	UGL	EE
ASB	4	020787	MAGNESIUM		1360.0000	UGL	EE
ASB	4	020787	MANGANESE		6.0000	UGL	EE
ASB	4	020787	MANGANESE		6.0000	UGL	EE
ASB	4	020787	SODIUM		3150.0000	UGL	EE
ASB	4	020787	SODIUM		3220.0000	UGL	EE
ASB	4	020787	NICKEL		30.0000	UGL	EE
ASB	4	020787	NICKEL		31.0000	UGL	EE
ASB	4	020787	NITRATE AS NITROGEN		160.0000	UGL	EE
ASB	4	020787	NITRATE AS NITROGEN		160.0000	UGL	EE
ASB	4	020787	LEAD	LT	6.0000	UGL	EE
ASB	4	020787	LEAD		6.0000	UGL	EE
ASB	4	020787	PH		5.4000	PH	FD
ASB	4	020787	PHENOLS	LT	2.0000	UGL	EE
ASB	4	020787	SELENIUM	LT	2.0000	UGL	EE
ASB	4	020787	SULFATE		10000.0000	UGL	EE
ASB	4	020787	TETRACHLOROETHYLENE	LT	1.0000	UGL	EE
ASB	4	020787	TOTAL DISSOLVED SOLIDS		12000.0000	UGL	EE
ASB	4	020787	TOTAL ORGANIC CARBON		5300.0000	UGL	EE
ASB	4	020787	TOTAL ORGANIC CARBON		4900.0000	UGL	EE
ASB	4	020787	TOTAL RADIUM		2.9000	PCL	RM
ASB	4	020787	TOTAL ORGANIC HALOGENS		6.0000	UGL	EE
ASB	4	020787	TOTAL PHOSPHATES		20.0000	UGL	EE
ASB	4	020787	TRICHLOROETHYLENE		5.2300	UGL	EE
ASB	4	020787	TRITIUM		5.0600	PCML	RM
ASB	4	020787	1,1,1-TRICHLOROETHANE	LT	1.0000	UGL	EE
ASB	4	020787	ZINC		31.0000	UGL	EE
ASB	4	020787	ZINC		28.0000	UGL	EE
ASB	4	042687	CARBON TETRACHLORIDE	LT	1.0000	UGL	EE
ASB	4	042687	CHLOROFORM	LT	1.0000	UGL	EE
ASB	4	042687	SPECIFIC CONDUCTANCE		50.0000	UMHC	FD
ASB	4	042687	PH		4.4000	PH	FD
ASB	4	042687	TETRACHLOROETHYLENE	LT	1.0000	UGL	EE
ASB	4	042687	TRICHLOROETHYLENE		5.8000	UGL	EE
ASB	4	042687	1,1,1-TRICHLOROETHANE	LT	1.0000	UGL	EE
ASB	4	080587	GROSS ALPHA		3.4000	PCL	RM
ASB	4	080587	CARBON TETRACHLORIDE	LT	1.0000	UGL	EE
ASB	4	080587	CHLOROFORM	LT	1.0000	UGL	EE
ASB	4	080587	SPECIFIC CONDUCTANCE		46.0000	UMHC	FD
ASB	4	080587	CHROMIUM	LT	4.0000	UGL	EE
ASB	4	080587	IRON		740.0000	UGL	EE
ASB	4	080587	MANGANESE		8.0000	UGL	EE
ASB	4	080587	SODIUM		3480.0000	UGL	EE
ASB	4	080587	LEAD	LT	6.0000	UGL	EE
ASB	4	080587	PH		5.7000	PH	FD
ASB	4	080587	TETRACHLOROETHYLENE	LT	1.0000	UGL	EE
ASB	4	080587	TOTAL ORGANIC CARBON	LT	1000.0000	UGL	EE
ASB	4	080587	TOTAL RADIUM		2.0000	PCL	RM
ASB	4	080587	TOTAL ORGANIC HALOGENS		6.0000	UGL	EE
ASB	4	080587	TRICHLOROETHYLENE		10.1000	UGL	EE

Raw DatA for ASB 4

ASB	4	080587	1,1,1-TRICHLOROETHANE	LT	1.0000	UGL	EE
ASB	4	101887	CARBON TETRACHLORIDE	LT	1.0000	UGL	EE
ASB	4	101887	CHLOROFORM	LT	1.0000	UGL	EE
ASB	4	101887	SPECIFIC CONDUCTANCE		45.0000	UMHC	FD
ASB	4	101887	PH		5.4000	PH	FD
ASB	4	101887	TETRACHLOROETHYLENE	LT	1.0000	UGL	EE
ASB	4	101887	TRICHLOROETHYLENE		4.8500	UGL	EE
ASB	4	101887	1,1,1-TRICHLOROETHANE	LT	1.0000	UGL	EE
ASB	4	013088	GROSS ALPHA		4.9000	PCL	EE
ASB	4	013088	NONVOLATILE BETA		4.0000	PCL	EE
ASB	4	013088	CARBON TETRACHLORIDE	LT	1.0000	UGL	EE
ASB	4	013088	CADMIUM	LT	2.0000	UGL	EE
ASB	4	013088	CHLOROFORM	LT	1.0000	UGL	EE
ASB	4	013088	CHLORIDE		2300.0000	UGL	EE
ASB	4	013088	SPECIFIC CONDUCTANCE		39.0000	UMHC	FD
ASB	4	013088	COPPER	LT	4.0000	UGL	EE
ASB	4	013088	IRON		12.0000	UGL	EE
ASB	4	013088	MERCURY	LT	0.2000	UGL	EE
ASB	4	013088	MANGANESE		2.0000	UGL	EE
ASB	4	013088	SODIUM		4950.0000	UGL	EE
ASB	4	013088	NICKEL	LT	4.0000	UGL	EE
ASB	4	013088	LEAD	LT	6.0000	UGL	EE
ASB	4	013088	PH		5.4000	PH	FD
ASB	4	013088	SULFATE	LT	5000.0000	UGL	EE
ASB	4	013088	TETRACHLOROETHYLENE	LT	1.0000	UGL	EE
ASB	4	013088	TOTAL ORGANIC CARBON	LT	1000.0000	UGL	EE
ASB	4	013088	TOTAL RADIUM		1.6000	PCL	EE
ASB	4	013088	TOTAL ORGANIC HALOGENS		5.0000	UGL	EE
ASB	4	013088	TRICHLOROETHYLENE		1.2900	UGL	EE
ASB	4	013088	1,1,1-TRICHLOROETHANE	LT	1.0000	UGL	EE
ASB	4	041788	CHLOROFORM	LT	1.0000	UGL	MA
ASB	4	041788	SPECIFIC CONDUCTANCE		40.0000	UMHC	FD
ASB	4	041788	PH		5.4000	PH	FD
ASB	4	041788	TETRACHLOROETHYLENE	LT	1.0000	UGL	MA
ASB	4	041788	TRICHLOROETHYLENE		2.3700	UGL	MA
ASB	4	041788	1,1,1-TRICHLOROETHANE		1.5300	UGL	MA
ASB	4	071588	SILVER	LT	2.0000	UGL	EE
ASB	4	071588	GROSS ALPHA		4.0000	PCL	EE
ASB	4	071588	ARSENIC	LT	2.0000	UGL	EE
ASB	4	071588	BARIUM		14.0000	UGL	EE
ASB	4	071588	NONVOLATILE BETA		4.5100	PCL	EE
ASB	4	071588	CALCIUM		1600.0000	UGL	EE
ASB	4	071588	CARBON TETRACHLORIDE	LT	1.0000	UGL	EE
ASB	4	071588	CARBON TETRACHLORIDE		95.3000	PER	EE
ASB	4	071588	CADMIUM	LT	2.0000	UGL	EE
ASB	4	071588	CERIUM 144		0.0000	PCML	SR
ASB	4	071588	CHLOROFORM	LT	1.0000	UGL	EE
ASB	4	071588	CHLOROFORM		98.4000	PER	EE
ASB	4	071588	CHLOROFORM	LT	1.0000	UGL	MA
ASB	4	071588	CHLOROFORM		92.3000	PER	MA
ASB	4	071588	CHLORIDE		3200.0000	UGL	EE
ASB	4	071588	SPECIFIC CONDUCTANCE		45.0000	UMHC	FD
ASB	4	071588	COBALT 60		0.0000	PCML	SR
ASB	4	071588	CHROMIUM	LT	4.0000	UGL	EE
ASB	4	071588	CHROMIUM 51		0.0000	PCML	SR
ASB	4	071588	CESIUM 134		0.0000	PCML	SR
ASB	4	071588	CESIUM 137		0.0000	PCML	SR
ASB	4	071588	FLUORIDE	LT	100.0000	UGL	EE
ASB	4	071588	IRON		21.0000	UGL	EE
ASB	4	071588	MERCURY	LT	0.2000	UGL	EE
ASB	4	071588	IODINE 131		0.0000	PCML	SR
ASB	4	071588	POTASSIUM		793.0000	UGL	EE
ASB	4	071588	MAGNESIUM		873.0000	UGL	EE
ASB	4	071588	MANGANESE		3.0000	UGL	EE

Raw DatA for ASB 4

ASB	4	071588	SODIUM		4610.0000	UGL	EE
ASB	4	071588	NITRATE AS NITROGEN		400.0000	UGL	EE
ASB	4	071588	LEAD	LT	6.0000	UGL	EE
ASB	4	071588	LEAD 214		0.0440	PCML	SR
ASB	4	071588	PH		5.4000	PH	FD
ASB	4	071588	PHENOLS	LT	5.0000	UGL	EE
ASB	4	071588	RUTHENIUM 103		0.0000	PCML	SR
ASB	4	071588	RUTHENIUM 106		0.0000	PCML	SR
ASB	4	071588	ANTIMONY 125		0.0000	PCML	SR
ASB	4	071588	SELENIUM	LT	2.0000	UGL	EE
ASB	4	071588	SILICA		2340.0000	UGL	EE
ASB	4	071588	SILICA		2420.0000	UGL	EE
ASB	4	071588	SULFATE	LT	5000.0000	UGL	EE
ASB	4	071588	TETRACHLOROETHYLENE	LT	1.0000	UGL	EE
ASB	4	071588	TETRACHLOROETHYLENE		92.5000	PER	EE
ASB	4	071588	TETRACHLOROETHYLENE	LT	1.0000	UGL	MA
ASB	4	071588	TETRACHLOROETHYLENE		98.3000	PER	MA
ASB	4	071588	TOTAL DISSOLVED SOLIDS		33000.0000	UGL	EE
ASB	4	071588	TOTAL ORGANIC CARBON	LT	1000.0000	UGL	EE
ASB	4	071588	TOTAL RADIUM		1.0000	PCL	EE
ASB	4	071588	TOTAL ORGANIC HALOGENS		7.0000	UGL	EE
ASB	4	071588	TOTAL PHOSPHATES	LT	20.0000	UGL	EE
ASB	4	071588	TRICHLOROETHYLENE		1.6900	UGL	EE
ASB	4	071588	TRICHLOROETHYLENE		113.0000	PER	EE
ASB	4	071588	TRICHLOROETHYLENE		1.2300	UGL	MA
ASB	4	071588	TRICHLOROETHYLENE		140.0000	PER	MA
ASB	4	071588	TRITIUM		1.0500	PCML	EE
ASB	4	071588	TRANS-1,2-DICHLOROETHENE	LT	1.0000	UGL	MA
ASB	4	071588	TRANS-1,2-DICHLOROETHENE		78.7000	PER	MA
ASB	4	071588	1,1-DICHLOROETHYLENE	LT	1.0000	UGL	MA
ASB	4	071588	1,1-DICHLOROETHYLENE		85.7000	PER	MA
ASB	4	071588	1,1,1-TRICHLOROETHANE	LT	1.0000	UGL	EE
ASB	4	071588	1,1,1-TRICHLOROETHANE		100.0000	PER	EE
ASB	4	071588	1,1,1-TRICHLOROETHANE	LT	1.0000	UGL	MA
ASB	4	071588	1,1,1-TRICHLOROETHANE		88.0000	PER	MA
ASB	4	071588	ZIRCONIUM/NIOBIUM 95		0.0000	PCML	SR
ASB	4	100288	CHLOROFORM	LT	1.0000	UGL	MA
ASB	4	100288	SPECIFIC CONDUCTANCE		43.0000	UMHC	FD
ASB	4	100288	PH		5.2000	PH	FD
ASB	4	100288	TETRACHLOROETHYLENE	LT	1.0000	UGL	MA
ASB	4	100288	TRICHLOROETHYLENE		3.0500	UGL	MA
ASB	4	100288	TRANS-1,2-DICHLOROETHENE	LT	1.0000	UGL	MA
ASB	4	100288	1,1-DICHLOROETHYLENE	LT	1.0000	UGL	MA
ASB	4	100288	1,1,1-TRICHLOROETHANE	LT	1.0000	UGL	MA
ASB	4	032689	SILVER	LT	2.0000	UGL	EE
ASB	4	032689	SILVER	LT	2.0000	UGL	EE
ASB	4	032689	GROSS ALPHA		2.2600	PCL	RM
ASB	4	032689	AMERICIUM 241	LT	0.5000	PCL	TE
ASB	4	032689	ARSENIC	LT	2.0000	UGL	EE
ASB	4	032689	ARSENIC	LT	2.0000	UGL	EE
ASB	4	032689	BARIUM		10.0000	UGL	EE
ASB	4	032689	BARIUM 140	LT	7.0000	PCL	TE
ASB	4	032689	NONVOLATILE BETA		1.8900	PCL	RM
ASB	4	032689	BERYLLIUM 7	LT	30.0000	PCL	TE
ASB	4	032689	CALCIUM		980.0000	UGL	EE
ASB	4	032689	CARBON TETRACHLORIDE	LT	1.0000	UGL	EE
ASB	4	032689	CADMIUM	LT	2.0000	UGL	EE
ASB	4	032689	CERIUM 141	LT	8.0000	PCL	TE
ASB	4	032689	CERIUM 144		0.0000	PCML	SR
ASB	4	032689	CERIUM 144	LT	30.0000	PCL	TE
ASB	4	032689	CHLOROFORM	LT	1.0000	UGL	EE
ASB	4	032689	CHLOROFORM	LT	1.0000	UGL	MA
ASB	4	032689	CHLORIDE		3500.0000	UGL	EE
ASB	4	032689	CURIUM 242	LT	0.4000	PCL	TE

Raw DatA for ASB 4

ASB	4	032689	CURIUM 243/244	LT	0.3000	PCL	TE
ASB	4	032689	SPECIFIC CONDUCTANCE		40.0000	UMHC	FD
ASB	4	032689	SPECIFIC CONDUCTANCE		40.0000	UMHC	FD
ASB	4	032689	COBALT 58	LT	4.0000	PCL	TE
ASB	4	032689	COBALT 60		0.0000	PCML	SR
ASB	4	032689	COBALT 60	LT	4.0000	PCL	TE
ASB	4	032689	CHROMIUM	LT	4.0000	UGL	EE
ASB	4	032689	CHROMIUM 51		0.0000	PCML	SR
ASB	4	032689	CESIUM 134		0.0000	PCML	SR
ASB	4	032689	CESIUM 134	LT	4.0000	PCL	TE
ASB	4	032689	CESIUM 137		0.0000	PCML	SR
ASB	4	032689	CESIUM 137	LT	4.0000	PCL	TE
ASB	4	032689	COPPER		6.0000	UGL	EE
ASB	4	032689	FLUORIDE	LT	100.0000	UGL	EE
ASB	4	032689	IRON		62.0000	UGL	EE
ASB	4	032689	IRON 59	LT	8.0000	PCL	TE
ASB	4	032689	MERCURY	LT	0.2000	UGL	EE
ASB	4	032689	IODINE 131		0.0000	PCML	SR
ASB	4	032689	IODINE 131	LT	8.0000	PCL	TE
ASB	4	032689	POTASSIUM		603.0000	UGL	EE
ASB	4	032689	POTASSIUM 40	LT	60.0000	PCL	TE
ASB	4	032689	MAGNESIUM		638.0000	UGL	EE
ASB	4	032689	MANGANESE		2.0000	UGL	EE
ASB	4	032689	MANGANESE 54	LT	3.0000	PCL	TE
ASB	4	032689	SODIUM		4340.0000	UGL	EE
ASB	4	032689	NICKEL	LT	4.0000	UGL	EE
ASB	4	032689	NITRATE AS NITROGEN		412.0000	UGL	EE
ASB	4	032689	LEAD	LT	6.0000	UGL	EE
ASB	4	032689	PH		5.6000	PH	FD
ASB	4	032689	PH		5.6000	PH	FD
ASB	4	032689	PHENOLS	LT	5.0000	UGL	EE
ASB	4	032689	PLUTONIUM 238	LT	0.7000	PCL	TE
ASB	4	032689	PLUTONIUM 239/240	LT	0.4000	PCL	TE
ASB	4	032689	RADIUM 226	LT	80.0000	PCL	TE
ASB	4	032689	RADIUM 226		1.9000	PCL	TE
ASB	4	032689	RADIUM 228	LT	1.0000	PCL	TE
ASB	4	032689	RUTHENIUM 103		0.0000	PCML	SR
ASB	4	032689	RUTHENIUM 103	LT	4.0000	PCL	TE
ASB	4	032689	RUTHENIUM 106		0.0000	PCML	SR
ASB	4	032689	RUTHENIUM 106	LT	30.0000	PCL	TE
ASB	4	032689	ANTIMONY 125		0.0000	PCML	SR
ASB	4	032689	SELENIUM	LT	2.0000	UGL	EE
ASB	4	032689	SELENIUM	LT	2.0000	UGL	EE
ASB	4	032689	SILICA		5560.0000	UGL	EE
ASB	4	032689	SULFATE	LT	5000.0000	UGL	EE
ASB	4	032689	STRONTIUM 89	LT	4.0000	PCL	TE
ASB	4	032689	STRONTIUM 90	LT	1.0000	PCL	TE
ASB	4	032689	TETRACHLOROETHYLENE	LT	1.0000	UGL	EE
ASB	4	032689	TETRACHLOROETHYLENE	LT	1.0000	UGL	MA
ASB	4	032689	TOTAL DISSOLVED SOLIDS		20000.0000	UGL	EE
ASB	4	032689	THORIUM 228	LT	7.0000	PCL	TE
ASB	4	032689	TOTAL ORGANIC CARBON		1100.0000	UGL	EE
ASB	4	032689	TOTAL RADIUM	LT	1.0000	PCL	RM
ASB	4	032689	TOTAL ORGANIC HALOGENS	LT	5.0000	UGL	EE
ASB	4	032689	TOTAL PHOSPHATES	LT	20.0000	UGL	EE
ASB	4	032689	TRICHLOROETHYLENE		1.5900	UGL	EE
ASB	4	032689	TRICHLOROETHYLENE		1.1200	UGL	MA
ASB	4	032689	TRITIUM	LT	1.0000	PCML	RM
ASB	4	032689	TRANS-1,2-DICHLOROETHENE	LT	1.0000	UGL	MA
ASB	4	032689	URANIUM 234	LT	2.0000	PCL	TE
ASB	4	032689	URANIUM 235	LT	1.0000	PCL	TE
ASB	4	032689	1,1-DICHLOROETHYLENE	LT	1.0000	UGL	MA
ASB	4	032689	1,1,1-TRICHLOROETHANE	LT	1.0000	UGL	EE
ASB	4	032689	1,1,1-TRICHLOROETHANE	LT	1.0000	UGL	MA

Raw DatA for ASB 4

ASB	4	032689	ZINC 65	LT	8.0000	PCL	TE
ASB	4	032689	ZIRCONIUM/NIOBIUM 95		0.0000	PCML	SR
ASB	4	032689	ZIRCONIUM 95	LT	4.0000	PCL	TE

This Page Intentionally Left Blank.

T-Test Data

This Page Intentionally Left Blank.

T-Test Data for ASB 4

OBS	SERIES	WELL	DATE	TESTNAME	VALUE
1	ASB	BKG	12687	ALUMINUM	43.00
2	ASB	BKG	12987	ALUMINUM	35.33
3	ASB	BKG	20789	ALUMINUM	80.00
4	ASB	BKG	22488	ALUMINUM	59.00
5	ASB	BKG	31289	ALUMINUM	46.50
6	ASB	BKG	40687	ALUMINUM	42.50
7	ASB	BKG	51088	ALUMINUM	253.00
8	ASB	BKG	51188	ALUMINUM	314.00
9	ASB	BKG	61886	ALUMINUM	62.00
10	ASB	BKG	72286	ALUMINUM	37.50
11	ASB	BKG	72386	ALUMINUM	45.00
12	ASB	BKG	80487	ALUMINUM	61.00
13	ASB	BKG	81388	ALUMINUM	42.00
14	ASB	BKG	81488	ALUMINUM	43.00
15	ASB	BKG	102888	ALUMINUM	51.00
16	ASB	BKG	110286	ALUMINUM	33.00
17	ASB	BKG	110386	ALUMINUM	37.67
18	ASB	BKG	110888	ALUMINUM	44.00
19	ASB	BKG	121787	ALUMINUM	74.00
20	ASB	BKG	121987	ALUMINUM	79.00
21	ASB	4	20787	BARIUM	16.50
22	ASB	4	22785	BARIUM	18.00
23	ASB	4	32689	BARIUM	10.00
24	ASB	4	71588	BARIUM	14.00
25	ASB	4	80684	BARIUM	17.00
26	ASB	4	102284	BARIUM	20.00
27	ASB	BKG	12687	BARIUM	7.50
28	ASB	BKG	12987	BARIUM	3.33
29	ASB	BKG	20789	BARIUM	5.00
30	ASB	BKG	22488	BARIUM	8.00
31	ASB	BKG	31289	BARIUM	8.50
32	ASB	BKG	51088	BARIUM	7.00
33	ASB	BKG	51188	BARIUM	2.00
34	ASB	BKG	61886	BARIUM	2.00
35	ASB	BKG	72286	BARIUM	4.00
36	ASB	BKG	72386	BARIUM	7.00
37	ASB	BKG	80487	BARIUM	6.50
38	ASB	BKG	81388	BARIUM	2.00
39	ASB	BKG	81488	BARIUM	6.00
40	ASB	BKG	102888	BARIUM	4.00
41	ASB	BKG	110286	BARIUM	2.00
42	ASB	BKG	110386	BARIUM	7.00
43	ASB	BKG	110888	BARIUM	9.00
44	ASB	BKG	121787	BARIUM	14.00
45	ASB	BKG	121987	BARIUM	5.00
46	ASB	4	20787	CALCIUM	2040.00
47	ASB	4	32689	CALCIUM	980.00
48	ASB	4	71588	CALCIUM	1600.00
49	ASB	BKG	12687	CALCIUM	265.00
50	ASB	BKG	12987	CALCIUM	876.33
51	ASB	BKG	110286	CALCIUM	983.50
52	ASB	BKG	110386	CALCIUM	655.00
53	ASB	4	13088	CHLORIDE	2300.00
54	ASB	4	20787	CHLORIDE	5300.00

T-Test Data for ASB 4

OBS	SERIES	WELL	DATE	TESTNAME	VALUE
55	ASB	4	21186	CHLORIDE	5200.00
56	ASB	4	22785	CHLORIDE	3400.00
57	ASB	4	32689	CHLORIDE	3500.00
58	ASB	4	71588	CHLORIDE	3200.00
59	ASB	4	80684	CHLORIDE	4300.00
60	ASB	4	102284	CHLORIDE	4700.00
61	ASB	BKG	12687	CHLORIDE	2500.00
62	ASB	BKG	12987	CHLORIDE	2900.00
63	ASB	BKG	20789	CHLORIDE	2200.00
64	ASB	BKG	22488	CHLORID	2150.00
65	ASB	BKG	31289	CHLORIDE	2500.00
66	ASB	BKG	51088	CHLORIDE	2450.00
67	ASB	BKG	51188	CHLORIDE	2000.00
68	ASB	BKG	61886	CHLORIDE	4166.67
69	ASB	BKG	72286	CHLORIDE	2270.00
70	ASB	BKG	72386	CHLORIDE	2270.00
71	ASB	BKG	80487	CHLORIDE	2950.00
72	ASB	BKG	81388	CHLORIDE	2400.00
73	ASB	BKG	81488	CHLORIDE	2300.00
74	ASB	BKG	102888	CHLORIDE	2100.00
75	ASB	BKG	110286	CHLORIDE	3400.00
76	ASB	BKG	110386	CHLORIDE	2800.00
77	ASB	BKG	110888	CHLORIDE	2200.00
78	ASB	BKG	121987	CHLORIDE	2400.00
79	ASB	4	13088	COPPER	2.00
80	ASB	4	20787	COPPER	19.00
81	ASB	4	32689	COPPER	6.00
82	ASB	4	80684	COPPER	2.00
83	ASB	4	102284	COPPER	7.00
84	ASB	BKG	12687	COPPER	4.50
85	ASB	BKG	12987	COPPER	2.00
86	ASB	BKG	20789	COPPER	11.00
87	ASB	BKG	22488	COPPER	7.50
88	ASB	BKG	31289	COPPER	5.50
89	ASB	BKG	51088	COPPER	6.00
90	ASB	BKG	51188	COPPER	5.00
91	ASB	BKG	61886	COPPER	5.50
92	ASB	BKG	72286	COPPER	6.00
93	ASB	BKG	72386	COPPER	3.00
94	ASB	BKG	80487	COPPER	8.50
95	ASB	BKG	81388	COPPER	2.00
96	ASB	BKG	81488	COPPER	4.00
97	ASB	BKG	102888	COPPER	5.00
98	ASB	BKG	110286	COPPER	9.50
99	ASB	BKG	110386	COPPER	9.00
100	ASB	BKG	110888	COPPER	15.00
101	ASB	BKG	121787	COPPER	15.00
102	ASB	BKG	121987	COPPER	5.00
103	ASB	4	13088	GROSS ALPHA	5.00
104	ASB	4	20787	GROSS ALPHA	3.00
105	ASB	4	21186	GROSS ALPHA	12.00
106	ASB	4	22785	GROSS ALPHA	6.00
107	ASB	4	32689	GROSS ALPHA	2.00
108	ASB	4	71588	GROSS ALPHA	4.00

T-Test Data for ASB 4

OBS	SERIES	WELL	DATE	TESTNAME	VALUE
109	ASB	4	80486	GROSS ALPHA	4.00
110	ASB	4	80587	GROSS ALPHA	3.00
111	ASB	4	80684	GROSS ALPHA	7.00
112	ASB	4	102284	GROSS ALPHA	8.00
113	ASB	BKG	12687	GROSS ALPHA	7.00
114	ASB	BKG	12987	GROSS ALPHA	1.00
115	ASB	BKG	20789	GROSS ALPHA	1.50
116	ASB	BKG	22488	GROSS ALPHA	14.50
117	ASB	BKG	31289	GROSS ALPHA	23.75
118	ASB	BKG	40687	GROSS ALPHA	5.25
119	ASB	BKG	61886	GROSS ALPHA	5.75
120	ASB	BKG	72286	GROSS ALPHA	1.50
121	ASB	BKG	72386	GROSS ALPHA	7.00
122	ASB	BKG	80487	GROSS ALPHA	3.75
123	ASB	BKG	110286	GROSS ALPHA	1.50
124	ASB	BKG	110386	GROSS ALPHA	7.50
125	ASB	BKG	121787	GROSS ALPHA	22.00
126	ASB	BKG	121987	GROSS ALPHA	1.00
127	ASB	4	13088	IRON	12.00
128	ASB	4	20787	IRON	106.50
129	ASB	4	21186	IRON	366.00
130	ASB	4	22785	IRON	445.00
131	ASB	4	32689	IRON	62.00
132	ASB	4	71588	IRON	21.00
133	ASB	4	80587	IRON	740.00
134	ASB	4	80684	IRON	439.00
135	ASB	4	102284	IRON	1690.00
136	ASB	BKG	12687	IRON	19.50
137	ASB	BKG	12987	IRON	31.50
138	ASB	BKG	61886	IRON	39.00
139	ASB	BKG	72286	IRON	31.50
140	ASB	BKG	72386	IRON	31.33
141	ASB	BKG	80487	IRON	76.50
142	ASB	BKG	110286	IRON	33.50
143	ASB	BKG	110386	IRON	27.67
144	ASB	BKG	121787	IRON	33.00
145	ASB	BKG	121987	IRON	40.00
146	ASB	4	13088	LEAD	3.00
147	ASB	4	20787	LEAD	4.50
148	ASB	4	22785	LEAD	9.00
149	ASB	4	32689	LEAD	3.00
150	ASB	4	41686	LEAD	8.00
151	ASB	4	42385	LEAD	6.00
152	ASB	4	71585	LEAD	11.00
153	ASB	4	71588	LEAD	3.00
154	ASB	4	80486	LEAD	10.00
155	ASB	4	80587	LEAD	3.00
156	ASB	4	80684	LEAD	2.00
157	ASB	4	102284	LEAD	10.00
158	ASB	4	102985	LEAD	11.00
159	ASB	BKG	12687	LEAD	11.50
160	ASB	BKG	12987	LEAD	8.67
161	ASB	BKG	20789	LEAD	20.00
162	ASB	BKG	22488	LEAD	8.50

T-Test Data for ASB 4

OBS	SERIES	WELL	DATE	TESTNAME	VALUE
163	ASB	BKG	31289	LEAD	3.000
164	ASB	BKG	40687	LEAD	11.000
165	ASB	BKG	51088	LEAD	11.000
166	ASB	BKG	51188	LEAD	9.000
167	ASB	BKG	61886	LEAD	24.500
168	ASB	BKG	72286	LEAD	22.500
169	ASB	BKG	72386	LEAD	28.333
170	ASB	BKG	80487	LEAD	9.500
171	ASB	BKG	81388	LEAD	3.000
172	ASB	BKG	81488	LEAD	3.000
173	ASB	BKG	102888	LEAD	9.500
174	ASB	BKG	110286	LEAD	17.000
175	ASB	BKG	110386	LEAD	17.667
176	ASB	BKG	110888	LEAD	15.000
177	ASB	BKG	121787	LEAD	8.000
178	ASB	BKG	121987	LEAD	9.000
179	ASB	BKG	12687	MAGNESIUM	435.000
180	ASB	BKG	12987	MAGNESIUM	481.000
181	ASB	BKG	110286	MAGNESIUM	485.000
182	ASB	BKG	110386	MAGNESIUM	443.333
183	ASB	4	13088	MANGANESE	2.000
184	ASB	4	20787	MANGANESE	6.000
185	ASB	4	21186	MANGANESE	18.000
186	ASB	4	22785	MANGANESE	13.000
187	ASB	4	32689	MANGANESE	2.000
188	ASB	4	71588	MANGANESE	3.000
189	ASB	4	80486	MANGANESE	9.000
190	ASB	4	80587	MANGANESE	8.000
191	ASB	4	80684	MANGANESE	40.000
192	ASB	4	102284	MANGANESE	29.000
193	ASB	BKG	12687	MANGANESE	3.500
194	ASB	BKG	12987	MANGANESE	19.333
195	ASB	BKG	20789	MANGANESE	17.000
196	ASB	BKG	31289	MANGANESE	3.500
197	ASB	BKG	61886	MANGANESE	14.000
198	ASB	BKG	72286	MANGANESE	24.500
199	ASB	BKG	72386	MANGANESE	5.000
200	ASB	BKG	80487	MANGANESE	11.000
201	ASB	BKG	81388	MANGANESE	13.000
202	ASB	BKG	81488	MANGANESE	3.000
203	ASB	BKG	110286	MANGANESE	21.000
204	ASB	BKG	110386	MANGANESE	5.000
205	ASB	BKG	121787	MANGANESE	14.000
206	ASB	BKG	121987	MANGANESE	15.000
207	ASB	4	13088	NICKEL	2.000
208	ASB	4	20787	NICKEL	30.500
209	ASB	4	32689	NICKEL	2.000
210	ASB	4	41686	NICKEL	11.000
211	ASB	4	80684	NICKEL	21.000
212	ASB	4	102284	NICKEL	25.000
213	ASB	4	20787	NITRATE AS NITROGEN	160.000
214	ASB	4	22785	NITRATE AS NITROGEN	250.000
215	ASB	4	32689	NITRATE AS NITROGEN	412.000
216	ASB	4	71588	NITRATE AS NITROGEN	400.000

T-Test Data for ASB 4

OBS	SERIES	WELL	DATE	TESTNAME	VALUE
217	ASB	4	80684	NITRATE AS NITROGEN	250.00
218	ASB	4	102284	NITRATE AS NITROGEN	250.00
219	ASB	BKG	12687	NITRATE AS NITROGEN	2180.00
220	ASB	BKG	12987	NITRATE AS NITROGEN	1200.00
221	ASB	BKG	20789	NITRATE AS NITROGEN	998.00
222	ASB	BKG	22488	NITRATE AS NITROGEN	1525.00
223	ASB	BKG	31289	NITRATE AS NITROGEN	1990.00
224	ASB	BKG	40687	NITRATE AS NITROGEN	1670.00
225	ASB	BKG	51088	NITRATE AS NITROGEN	1560.00
226	ASB	BKG	51188	NITRATE AS NITROGEN	880.00
227	ASB	BKG	61886	NITRATE AS NITROGEN	1783.33
228	ASB	BKG	72286	NITRATE AS NITROGEN	1190.00
229	ASB	BKG	72386	NITRATE AS NITROGEN	2070.00
230	ASB	BKG	80487	NITRATE AS NITROGEN	1675.00
231	ASB	BKG	81388	NITRATE AS NITROGEN	1080.00
232	ASB	BKG	81488	NITRATE AS NITROGEN	1980.00
233	ASB	BKG	102888	NITRATE AS NITROGEN	1210.00
234	ASB	BKG	110286	NITRATE AS NITROGEN	1170.00
235	ASB	BKG	110386	NITRATE AS NITROGEN	2140.00
236	ASB	BKG	110888	NITRATE AS NITROGEN	2240.00
237	ASB	BKG	121787	NITRATE AS NITROGEN	3040.00
238	ASB	BKG	121987	NITRATE AS NITROGEN	1370.00
239	ASB	4	13088	NONVOLATILE BETA	4.00
240	ASB	4	20787	NONVOLATILE BETA	3.00
241	ASB	4	21186	NONVOLATILE BETA	9.00
242	ASB	4	22785	NONVOLATILE BETA	4.00
243	ASB	4	32689	NONVOLATILE BETA	2.00
244	ASB	4	71588	NONVOLATILE BETA	5.00
245	ASB	4	80684	NONVOLATILE BETA	1.50
246	ASB	4	102284	NONVOLATILE BETA	1.50
247	ASB	BKG	12687	NONVOLATILE BETA	5.00
248	ASB	BKG	12987	NONVOLATILE BETA	2.00
249	ASB	BKG	20789	NONVOLATILE BETA	1.00
250	ASB	BKG	22488	NONVOLATILE BETA	8.67
251	ASB	BKG	31289	NONVOLATILE BETA	14.25
252	ASB	BKG	40687	NONVOLATILE BETA	4.50
253	ASB	BKG	61886	NONVOLATILE BETA	4.00
254	ASB	BKG	72286	NONVOLATILE BETA	1.00
255	ASB	BKG	72386	NONVOLATILE BETA	4.00
256	ASB	BKG	80487	NONVOLATILE BETA	3.00
257	ASB	BKG	110286	NONVOLATILE BETA	1.00
258	ASB	BKG	110386	NONVOLATILE BETA	5.50
259	ASB	BKG	121787	NONVOLATILE BETA	14.00
260	ASB	BKG	121987	NONVOLATILE BETA	3.00
261	ASB	4	12583	PH	5.00
262	ASB	4	13088	PH	5.00
263	ASB	4	20787	PH	5.00
264	ASB	4	21186	PH	5.00
265	ASB	4	22785	PH	5.00
266	ASB	4	30184	PH	6.00
267	ASB	4	32689	PH	6.00
268	ASB	4	41184	PH	6.00
269	ASB	4	41686	PH	5.00
270	ASB	4	41788	PH	5.00

T-Test Data for ASB 4

OBS	SERIES	WELL	DATE	TESTNAME	VALUE
271	ASB	4	41983	PH	5.0
272	ASB	4	42385	PH	5.0
273	ASB	4	42687	PH	4.0
274	ASB	4	52682	PH	6.0
275	ASB	4	71585	PH	5.0
276	ASB	4	71588	PH	5.0
277	ASB	4	80486	PH	6.0
278	ASB	4	80587	PH	6.0
279	ASB	4	80683	PH	5.0
280	ASB	4	80684	PH	5.0
281	ASB	4	81282	PH	6.0
282	ASB	4	100288	PH	5.0
283	ASB	4	101286	PH	5.0
284	ASB	4	101887	PH	5.0
285	ASB	4	101982	PH	5.0
286	ASB	4	102284	PH	5.0
287	ASB	4	102985	PH	5.0
288	ASB	4	112883	PH	5.0
289	ASB	BKG	12687	PH	5.0
290	ASB	BKG	12987	PH	4.0
291	ASB	BKG	20789	PH	5.0
292	ASB	BKG	22488	PH	5.0
293	ASB	BKG	31289	PH	4.0
294	ASB	BKG	40687	PH	4.5
295	ASB	BKG	51088	PH	4.0
296	ASB	BKG	51188	PH	5.0
297	ASB	BKG	61886	PH	5.0
298	ASB	BKG	72286	PH	5.0
299	ASB	BKG	72386	PH	5.0
300	ASB	BKG	80487	PH	5.0
301	ASB	BKG	81388	PH	5.0
302	ASB	BKG	81488	PH	4.0
303	ASB	BKG	90687	PH	5.0
304	ASB	BKG	90887	PH	5.0
305	ASB	BKG	102888	PH	5.0
306	ASB	BKG	110286	PH	4.0
307	ASB	BKG	110386	PH	4.0
308	ASB	BKG	110888	PH	5.0
309	ASB	BKG	121787	PH	4.0
310	ASB	BKG	121987	PH	5.0
311	ASB	4	13088	SODIUM	4950.0
312	ASB	4	20787	SODIUM	3185.0
313	ASB	4	21186	SODIUM	2350.0
314	ASB	4	22785	SODIUM	2290.0
315	ASB	4	32689	SODIUM	4340.0
316	ASB	4	42385	SODIUM	1780.0
317	ASB	4	71585	SODIUM	2090.0
318	ASB	4	71588	SODIUM	4610.0
319	ASB	4	80587	SODIUM	3480.0
320	ASB	4	80684	SODIUM	2255.0
321	ASB	4	101286	SODIUM	3250.0
322	ASB	4	102284	SODIUM	1970.0
323	ASB	4	102985	SODIUM	2550.0
324	ASB	BKG	12687	SODIUM	4475.0

T-Test Data for ASB 4

OBS	SERIES	WELL	DATE	TESTNAME	VALUE
325	ASB	BKG	12987	SODIUM	1990.0
326	ASB	BKG	20789	SODIUM	1740.0
327	ASB	BKG	22488	SODIUM	2610.0
328	ASB	BKG	31289	SODIUM	2530.0
329	ASB	BKG	40687	SODIUM	2840.0
330	ASB	BKG	51088	SODIUM	3700.0
331	ASB	BKG	51188	SODIUM	1680.0
332	ASB	BKG	61886	SODIUM	2620.0
333	ASB	BKG	72286	SODIUM	1935.0
334	ASB	BKG	72386	SODIUM	4330.0
335	ASB	BKG	80487	SODIUM	2620.0
336	ASB	BKG	81388	SODIUM	1630.0
337	ASB	BKG	81488	SODIUM	3360.0
338	ASB	BKG	102888	SODIUM	1730.0
339	ASB	BKG	110286	SODIUM	1725.0
340	ASB	BKG	110386	SODIUM	3880.0
341	ASB	BKG	110888	SODIUM	3280.0
342	ASB	BKG	121787	SODIUM	3460.0
343	ASB	BKG	121987	SODIUM	1660.0
344	ASB	4	12583	SPECIFIC CONDUCTANCE	40.0
345	ASB	4	13088	SPECIFIC CONDUCTANCE	39.0
346	ASB	4	20787	SPECIFIC CONDUCTANCE	60.0
347	ASB	4	21186	SPECIFIC CONDUCTANCE	43.0
348	ASB	4	22785	SPECIFIC CONDUCTANCE	69.0
349	ASB	4	30184	SPECIFIC CONDUCTANCE	25.0
350	ASB	4	32689	SPECIFIC CONDUCTANCE	40.0
351	ASB	4	41184	SPECIFIC CONDUCTANCE	41.0
352	ASB	4	41686	SPECIFIC CONDUCTANCE	47.0
353	ASB	4	41788	SPECIFIC CONDUCTANCE	40.0
354	ASB	4	41983	SPECIFIC CONDUCTANCE	41.0
355	ASB	4	42385	SPECIFIC CONDUCTANCE	50.0
356	ASB	4	42687	SPECIFIC CONDUCTANCE	50.0
357	ASB	4	52682	SPECIFIC CONDUCTANCE	109.0
358	ASB	4	71585	SPECIFIC CONDUCTANCE	42.0
359	ASB	4	71588	SPECIFIC CONDUCTANCE	45.0
360	ASB	4	80486	SPECIFIC CONDUCTANCE	58.0
361	ASB	4	80587	SPECIFIC CONDUCTANCE	46.0
362	ASB	4	80683	SPECIFIC CONDUCTANCE	74.0
363	ASB	4	80684	SPECIFIC CONDUCTANCE	56.0
364	ASB	4	81282	SPECIFIC CONDUCTANCE	36.0
365	ASB	4	100288	SPECIFIC CONDUCTANCE	43.0
366	ASB	4	101286	SPECIFIC CONDUCTANCE	50.0
367	ASB	4	101887	SPECIFIC CONDUCTANCE	45.0
368	ASB	4	101982	SPECIFIC CONDUCTANCE	50.0
369	ASB	4	102284	SPECIFIC CONDUCTANCE	84.0
370	ASB	4	102985	SPECIFIC CONDUCTANCE	38.0
371	ASB	4	112883	SPECIFIC CONDUCTANCE	26.0
372	ASB	BKG	12687	SPECIFIC CONDUCTANCE	19.0
373	ASB	BKG	12987	SPECIFIC CONDUCTANCE	28.0
374	ASB	BKG	20789	SPECIFIC CONDUCTANCE	28.0
375	ASB	BKG	22488	SPECIFIC CONDUCTANCE	31.5
376	ASB	BKG	31289	SPECIFIC CONDUCTANCE	35.0
377	ASB	BKG	40687	SPECIFIC CONDUCTANCE	30.0
378	ASB	BKG	51088	SPECIFIC CONDUCTANCE	38.0

T-Test Data for ASB 4

OBS	SERIES	WELL	DATE	TESTNAME	VALUE
379	ASB	BKG	51188	SPECIFIC CONDUCTANCE	24.0
380	ASB	BKG	61886	SPECIFIC CONDUCTANCE	26.0
381	ASB	BKG	72286	SPECIFIC CONDUCTANCE	26.0
382	ASB	BKG	72386	SPECIFIC CONDUCTANCE	40.0
383	ASB	BKG	80487	SPECIFIC CONDUCTANCE	31.0
384	ASB	BKG	81388	SPECIFIC CONDUCTANCE	25.0
385	ASB	BKG	81488	SPECIFIC CONDUCTANCE	36.0
386	ASB	BKG	90687	SPECIFIC CONDUCTANCE	29.0
387	ASB	BKG	90887	SPECIFIC CONDUCTANCE	38.0
388	ASB	BKG	102888	SPECIFIC CONDUCTANCE	25.0
389	ASB	BKG	110286	SPECIFIC CONDUCTANCE	32.0
390	ASB	BKG	110386	SPECIFIC CONDUCTANCE	43.0
391	ASB	BKG	110888	SPECIFIC CONDUCTANCE	35.0
392	ASB	BKG	121787	SPECIFIC CONDUCTANCE	28.0
393	ASB	BKG	121987	SPECIFIC CONDUCTANCE	20.0
394	ASB	4	20787	TOTAL DISSOLVED SOLIDS	12000.0
395	ASB	4	32689	TOTAL DISSOLVED SOLIDS	20000.0
396	ASB	4	71588	TOTAL DISSOLVED SOLIDS	33000.0
397	ASB	4	80684	TOTAL DISSOLVED SOLIDS	3542000.0
398	ASB	4	102284	TOTAL DISSOLVED SOLIDS	70000.0
399	ASB	BKG	12587	TOTAL DISSOLVED SOLIDS	22000.0
400	ASB	BKG	12987	TOTAL DISSOLVED SOLIDS	32000.0
401	ASB	BKG	20789	TOTAL DISSOLVED SOLIDS	2500.0
402	ASB	BKG	22488	TOTAL DISSOLVED SOLIDS	24000.0
403	ASB	BKG	31289	TOTAL DISSOLVED SOLIDS	23000.0
404	ASB	BKG	40687	TOTAL DISSOLVED SOLIDS	28400.0
405	ASB	BKG	51088	TOTAL DISSOLVED SOLIDS	40000.0
406	ASB	BKG	51188	TOTAL DISSOLVED SOLIDS	26000.0
407	ASB	BKG	80487	TOTAL DISSOLVED SOLIDS	64000.0
408	ASB	BKG	81388	TOTAL DISSOLVED SOLIDS	28000.0
409	ASB	BKG	81488	TOTAL DISSOLVED SOLIDS	31000.0
410	ASB	BKG	102888	TOTAL DISSOLVED SOLIDS	112000.0
411	ASB	BKG	110888	TOTAL DISSOLVED SOLIDS	59000.0
412	ASB	BKG	121787	TOTAL DISSOLVED SOLIDS	9000.0
413	ASB	BKG	121987	TOTAL DISSOLVED SOLIDS	52000.0
414	ASB	4	13088	TOTAL ORGANIC CARBON	500.0
415	ASB	4	20787	TOTAL ORGANIC CARBON	5100.0
416	ASB	4	21186	TOTAL ORGANIC CARBON	14500.0
417	ASB	4	22785	TOTAL ORGANIC CARBON	4370.0
418	ASB	4	32689	TOTAL ORGANIC CARBON	1100.0
419	ASB	4	42385	TOTAL ORGANIC CARBON	4235.0
420	ASB	4	71585	TOTAL ORGANIC CARBON	4080.0
421	ASB	4	71588	TOTAL ORGANIC CARBON	500.0
422	ASB	4	80486	TOTAL ORGANIC CARBON	2000.0
423	ASB	4	80587	TOTAL ORGANIC CARBON	500.0
424	ASB	4	80684	TOTAL ORGANIC CARBON	2500.0
425	ASB	4	102284	TOTAL ORGANIC CARBON	2500.0
426	ASB	4	102985	TOTAL ORGANIC CARBON	900.0
427	ASB	4	13088	TOTAL ORGANIC HALOGENS	5.0
428	ASB	4	20787	TOTAL ORGANIC HALOGENS	6.0
429	ASB	4	21186	TOTAL ORGANIC HALOGENS	71.0
430	ASB	4	22785	TOTAL ORGANIC HALOGENS	11.0
431	ASB	4	32689	TOTAL ORGANIC HALOGENS	2.5
432	ASB	4	42385	TOTAL ORGANIC HALOGENS	11.0

T-Test Data for ASB 4

OBS	SERIES	WELL	DATE	TESTNAME	VALUE
433	ASB	4	71585	TOTAL ORGANIC HALOGENS	26.000
434	ASB	4	71588	TOTAL ORGANIC HALOGENS	7.000
435	ASB	4	80486	TOTAL ORGANIC HALOGENS	25.000
436	ASB	4	80587	TOTAL ORGANIC HALOGENS	6.000
437	ASB	4	101286	TOTAL ORGANIC HALOGENS	16.000
438	ASB	4	102985	TOTAL ORGANIC HALOGENS	61.000
439	ASB	BKG	12687	TOTAL PHOSPHATES	30.000
440	ASB	BKG	12987	TOTAL PHOSPHATES	40.000
441	ASB	BKG	20789	TOTAL PHOSPHATES	10.000
442	ASB	BKG	31289	TOTAL PHOSPHATES	13.667
443	ASB	BKG	40687	TOTAL PHOSPHATES	10.000
444	ASB	BKG	51088	TOTAL PHOSPHATES	30.000
445	ASB	BKG	51188	TOTAL PHOSPHATES	40.000
446	ASB	BKG	61886	TOTAL PHOSPHATES	9.500
447	ASB	BKG	72286	TOTAL PHOSPHATES	39.000
448	ASB	BKG	72386	TOTAL PHOSPHATES	42.000
449	ASB	BKG	80487	TOTAL PHOSPHATES	15.000
450	ASB	BKG	81388	TOTAL PHOSPHATES	10.000
451	ASB	BKG	81488	TOTAL PHOSPHATES	10.000
452	ASB	BKG	102888	TOTAL PHOSPHATES	10.000
453	ASB	BKG	110286	TOTAL PHOSPHATES	39.500
454	ASB	BKG	110386	TOTAL PHOSPHATES	37.000
455	ASB	BKG	110888	TOTAL PHOSPHATES	60.000
456	ASB	BKG	121787	TOTAL PHOSPHATES	70.000
457	ASB	BKG	121987	TOTAL PHOSPHATES	100.000
458	ASB	4	13088	TOTAL RADIUM	2.000
459	ASB	4	20787	TOTAL RADIUM	3.000
460	ASB	4	21186	TOTAL RADIUM	6.000
461	ASB	4	22785	TOTAL RADIUM	4.000
462	ASB	4	32689	TOTAL RADIUM	0.500
463	ASB	4	71588	TOTAL RADIUM	1.000
464	ASB	4	80486	TOTAL RADIUM	4.000
465	ASB	4	80587	TOTAL RADIUM	2.000
466	ASB	4	80684	TOTAL RADIUM	4.000
467	ASB	4	102284	TOTAL RADIUM	6.000
468	ASB	BKG	12687	TOTAL RADIUM	7.000
469	ASB	BKG	12987	TOTAL RADIUM	0.500
470	ASB	BKG	20789	TOTAL RADIUM	1.000
471	ASB	BKG	22488	TOTAL RADIUM	4.[illegible]33
472	ASB	BKG	31289	TOTAL RADIUM	12.000
473	ASB	BKG	40687	TOTAL RADIUM	4.250
474	ASB	BKG	51088	TOTAL RADIUM	6.000
475	ASB	BKG	51188	TOTAL RADIUM	0.500
476	ASB	BKG	61886	TOTAL RADIUM	4.500
477	ASB	BKG	72286	TOTAL RADIUM	1.000
478	ASB	BKG	72386	TOTAL RADIUM	9.000
479	ASB	BKG	80487	TOTAL RADIUM	3.500
480	ASB	BKG	81388	TOTAL RADIUM	1.000
481	ASB	BKG	81488	TOTAL RADIUM	7.000
482	ASB	BKG	102888	TOTAL RADIUM	0.500
483	ASB	BKG	110286	TOTAL RADIUM	0.500
484	ASB	BKG	110386	TOTAL RADIUM	7.500
485	ASB	BKG	110888	TOTAL RADIUM	6.000
486	ASB	BKG	121787	TOTAL RADIUM	6.000

T-Test Data for ASB 4

OBS	SERIES	WELL	DATE	TESTNAME	VALUE
487	ASB	BKG	121987	TOTAL RADIUM	0.0000
488	ASB	4	13088	TRICHLOROETHYLENE	1.0000
489	ASB	4	20787	TRICHLOROETHYLENE	5.0000
490	ASB	4	32689	TRICHLOROETHYLENE	2.0000
491	ASB	4	42687	TRICHLOROETHYLENE	6.0000
492	ASB	4	71588	TRICHLOROETHYLENE	2.0000
493	ASB	4	80587	TRICHLOROETHYLENE	10.0000
494	ASB	4	101286	TRICHLOROETHYLENE	22.0000
495	ASB	4	101887	TRICHLOROETHYLENE	5.0000
496	ASB	BKG	40687	TURBIDITY	0.0000
497	ASB	BKG	61886	TURBIDITY	0.6667
498	ASB	BKG	80487	TURBIDITY	0.5000
499	ASB	BKG	121787	TURBIDITY	0.0000
500	ASB	BKG	121987	TURBIDITY	0.0000
501	ASB	4	20787	ZINC	29.5000
502	ASB	4	41686	ZINC	53.0000
503	ASB	4	80684	ZINC	87.0000
504	ASB	4	102284	ZINC	82.0000
505	ASB	BKG	12687	ZINC	7.0000
506	ASB	BKG	12987	ZINC	8.6667
507	ASB	BKG	20789	ZINC	17.0000
508	ASB	BKG	31289	ZINC	11.0000
509	ASB	BKG	51088	ZINC	6.0000
510	ASB	BKG	51188	ZINC	11.0000
511	ASB	BKG	61886	ZINC	9.7500
512	ASB	BKG	72286	ZINC	15.5000
513	ASB	BKG	72386	ZINC	2.0000
514	ASB	BKG	80487	ZINC	46.5000
515	ASB	BKG	81388	ZINC	49.0000
516	ASB	BKG	81488	ZINC	24.0000
517	ASB	BKG	102888	ZINC	44.0000
518	ASB	BKG	110286	ZINC	8.0000
519	ASB	BKG	110386	ZINC	11.3333
520	ASB	BKG	110888	ZINC	12.0000
521	ASB	BKG	121787	ZINC	54.0000
522	ASB	BKG	121987	ZINC	17.0000

Statistical Comparison Results

This Page Intentionally Left Blank.

TTEST PROCEDURE

********** TESTNAME=BARIUM **********

Variable: VALUE

WELL	N	Mean	Std Dev	Std Error	Minimum	Maximum
4	6	15.91666667	3.49880932	1.42838292	10.00000000	20.00000000
BKG	19	5.78070175	3.06365222	0.70285002	2.00000000	14.00000000

Variances	T	Method	DF	Prob>|T|
Unequal	6.3670	Satterthwaite	7.6	0.0003
		Cochran	.	0.0009
Equal	6.8423		23.0	0.0000

For H0: Variances are equal, F' = 1.30 DF = (5,18) Prob>F' = 0.6119

********** TESTNAME=CALCIUM **********

Variable: VALUE

WELL	N	Mean	Std Dev	Std Error	Minimum	Maximum
4	3	1540.000000	532.5410782	307.4627349	980.0000000	2040.000000
BKG	4	694.958333	317.6024878	158.8012439	265.0000000	983.500000

Variances	T	Method	DF	Prob>|T|
Unequal	2.4420	Satterthwaite	3.1	0.0910
		Cochran	.	0.1268
Equal	2.6527		5.0	0.0453

For H0: Variances are equal, F' = 2.81 DF = (2,3) Prob>F' = 0.4104

********** TESTNAME=CHLORIDE **********

Variable: VALUE

WELL	N	Mean	Std Dev	Std Error	Minimum	Maximum
4	8	3987.500000	1058.890929	374.3744783	2300.000000	5300.000000
BKG	18	2553.148148	535.242260	126.1578107	2000.000000	4166.666667

Variances	T	Method	DF	Prob>|T|
Unequal	3.6307	Satterthwaite	8.6	0.0059
		Cochran	.	0.0077
Equal	4.6369		24.0	0.0001

For H0: Variances are equal, F' = 3.91 DF = (7,17) Prob>F' = 0.0203

********** TESTNAME=COPPER **********

Variable: VALUE

WELL	N	Mean	Std Dev	Std Error	Minimum	Maximum
4	5	7.20000000	6.97853853	3.12089731	2.00000000	19.00000000
BKG	19	6.78947368	3.76871548	0.86460263	2.00000000	15.00000000

Variances	T	Method	DF	Prob>|T|
Unequal	0.1268	Satterthwaite	4.6	0.9045
		Cochran	.	0.9049
Equal	0.1805		22.0	0.8584

For H0: Variances are equal, F' = 3.43 DF = (4,18) Prob>F' = 0.0598

********** TESTNAME=GROSS ALPHA **********

Variable: VALUE

WELL	N	Mean	Std Dev	Std Error	Minimum	Maximum
4	10	5.40000000	2.98886824	0.94516313	2.00000000	12.00000000
BKG	14	7.35714286	7.53562965	2.01398174	1.00000000	23.75000000

Variances	T	Method	DF	Prob>|T|
Unequal	-0.8797	Satterthwaite	18.1	0.3906
		Cochran	.	0.3963
Equal	-0.7749		22.0	0.4466

For H0: Variances are equal, F' = 6.36 DF = (13,9) Prob>F' = 0.0089

********** TESTNAME=IRON **********

Variable: VALUE

WELL	N	Mean	Std Dev	Std Error	Minimum	Maximum
4	9	431.2777778	532.7016702	177.5672234	12.00000000	1690.000000
BKG	10	36.3500000	15.2142010	4.8111528	19.50000000	76.500000

Variances	T	Method	DF	Prob>|T|
Unequal	2.2233	Satterthwaite	8.0	0.0568
		Cochran	.	0.0569
Equal	2.3510		17.0	0.0310

For H0: Variances are equal, F' = 1225.94 DF = (8,9) Prob>F' = 0.0000

********** TESTNAME=LEAD **********

Variable: VALUE

WELL	N	Mean	Std Dev	Std Error	Minimum	Maximum
4	13	6.42307692	3.49908413	0.97047133	2.00000000	11.00000000
BKG	20	12.48333333	7.15919643	1.60084499	3.00000000	28.33333333

Variances	T	Method	DF	Prob>|T|
Unequal	-3.2373	Satterthwaite	29.3	0.0030
		Cochran	.	0.0051
Equal	-2.8291		31.0	0.0081

For H0: Variances are equal, F' = 4.19 DF = (19,12) Prob>F' = 0.0145

********** TESTNAME=MANGANESE **********

Variable: VALUE

WELL	N	Mean	Std Dev	Std Error	Minimum	Maximum
4	10	13.00000000	12.65789170	4.00277681	2.00000000	40.00000000
BKG	14	12.05952381	7.11703360	1.90210724	3.00000000	24.50000000

Variances	T	Method	DF	Prob>|T|
Unequal	0.2122	Satterthwaite	13.1	0.8352
		Cochran	.	0.8364
Equal	0.2325		22.0	0.8183

For H0: Variances are equal, F' = 3.16 DF = (9,13) Prob>F' = 0.0591

********** TESTNAME=NITRATE AS NITROGEN **********

Variable: VALUE

WELL	N	Mean	Std Dev	Std Error	Minimum	Maximum
4	6	287.000000	98.6204847	40.2616443	160.0000000	412.000000
BKG	20	1647.566667	538.2189613	120.3494184	880.0000000	3040.000000

Variances	T	Method	DF	Prob>|T|
Unequal	-10.7211	Satterthwaite	22.4	0.0001
		Cochran	.	0.0001
Equal	-6.0769		24.0	0.0000

For H0: Variances are equal, F' = 29.78 DF = (19,5) Prob>F' = 0.0014

********** TESTNAME=NONVOLATILE BETA **********

Variable: VALUE

WELL	N	Mean	Std Dev	Std Error	Minimum	Maximum
4	8	3.75000000	2.47847880	0.87627458	1.50000000	9.00000000
BKG	14	5.06547619	4.36284068	1.16601822	1.00000000	14.25000000

Variances	T	Method	DF	Prob>|T|
Unequal	-0.9019	Satterthwaite	20.0	0.3779
		Cochran	.	0.3886
Equal	-0.7789		20.0	0.4452

For H0: Variances are equal, F' = 3.10 DF = (13,7) Prob>F' = 0.1396

********** TESTNAME=PH **********

Variable: VALUE

WELL	N	Mean	Std Dev	Std Error	Minimum	Maximum
4	28	5.21428571	0.49867549	0.09424081	4.00000000	6.00000000
BKG	22	4.65909091	0.47274184	0.10078890	4.00000000	5.00000000

Variances	T	Method	DF	Prob>|T|
Unequal	4.0236	Satterthwaite	46.3	0.0002
		Cochran	.	0.0005
Equal	3.9974		48.0	0.0002

For H0: Variances are equal, F' = 1.11 DF = (27,21) Prob>F' = 0.8111

********** TESTNAME=SODIUM **********

Variable: VALUE

WELL	N	Mean	Std Dev	Std Error	Minimum	Maximum
4	13	3007.692308	1063.723052	295.0236928	1780.000000	4950.000000
BKG	20	2689.750000	939.937673	210.1764531	1630.000000	4475.000000

Variances	T	Method	DF	Prob>|T|
Unequal	0.8777	Satterthwaite	23.5	0.3890
		Cochran	.	0.3952
Equal	0.9017		31.0	0.3742

For H0: Variances are equal, F' = 1.28 DF = (12,19) Prob>F' = 0.6100

********** TESTNAME=SPECIFIC CONDUCTANCE **********

Variable: VALUE

WELL	N	Mean	Std Dev	Std Error	Minimum	Maximum
4	28	49.53571429	17.35144810	3.27911547	25.00000000	109.0000000
BKG	22	30.34090909	6.32340016	1.34815344	19.00000000	43.0000000

Variances	T	Method	DF	Prob>|T|
Unequal	5.4139	Satterthwaite	35.6	0.0001
		Cochran	.	0.0001
Equal	4.9289		48.0	0.0000

For H0: Variances are equal, F' = 7.53 DF = (27,21) Prob>F' = 0.0000

********** TESTNAME=TOTAL DISSOLVED SOLIDS **********

Variable: VALUE

WELL	N	Mean	Std Dev	Std Error	Minimum	Maximum
4	5	735400.0000	1569094.580	701720.4287	12000.00000	3542000.000
BKG	15	36860.0000	26689.907	6891.3044	2500.00000	112000.000

Variances	T	Method	DF	Prob>|T|
Unequal	0.9954	Satterthwaite	4.0	0.3759
		Cochran	.	0.3759
Equal	1.8279		18.0	0.0842

For H0: Variances are equal, F' = 3456.24 DF = (4,14) Prob>F' = 0.0000

********** TESTNAME=TOTAL RADIUM **********

Variable: VALUE

WELL	N	Mean	Std Dev	Std Error	Minimum	Maximum
4	10	3.25000000	1.90394328	0.60207973	0.50000000	6.00000000
BKG	20	4.12916667	3.43490798	0.76806877	0.00000000	12.00000000

Variances	T	Method	DF	Prob>|T|
Unequal	-0.9009	Satterthwaite	27.6	0.3755
		Cochran	.	0.3837
Equal	-0.7496		28.0	0.4598

For H0: Variances are equal, F' = 3.25 DF = (19,9) Prob>F' = 0.0740

********** TESTNAME=ZINC **********

Variable: VALUE

WELL	N	Mean	Std Dev	Std Error	Minimum	Maximum
4	4	62.87500000	26.82776857	13.41388429	29.50000000	87.00000000
BKG	18	19.65277778	16.61846584	3.91700996	2.00000000	54.00000000

Variances	T	Method	DF	Prob>|T|
Unequal	3.0930	Satterthwaite	3.5	0.0445
		Cochran	.	0.0502
Equal	4.2238		20.0	0.0004

For H0: Variances are equal, F' = 2.61 DF = (3,17) Prob>F' = 0.1708

Groundwater Monitoring Well

ASB 5A

This Page Intentionally Left Blank.

Raw Data

This Page Intentionally Left Blank.

Raw Data for ASB 5A

ASB	5A	032384	SPECIFIC CONDUCTANCE		54.0000	UMHC	FD
ASB	5A	032384	PH		5.8000	PH	FD
ASB	5A	041284	SPECIFIC CONDUCTANCE		44.0000	UMHC	FD
ASB	5A	041284	PH		6.2000	PH	FD
ASB	5A	081484	SILVER	LT	2.0000	UGL	EE
ASB	5A	081484	SILVER	LT	2.0000	UGL	EE
ASB	5A	081484	GROSS ALPHA		5.0000	PCL	CP
ASB	5A	081484	ARSENIC	LT	1.0000	UGL	EE
ASB	5A	081484	ARSENIC	LT	1.0000	UGL	EE
ASB	5A	081484	BARIUM		16.0000	UGL	EE
ASB	5A	081484	BARIUM		16.0000	UGL	EE
ASB	5A	081484	BERYLLIUM	LT	2.0000	UGL	EE
ASB	5A	081484	BERYLLIUM	LT	2.0000	UGL	EE
ASB	5A	081484	NONVOLATILE BETA	LT	2.0000	PCL	CP
ASB	5A	081484	CADMIUM	LT	2.0000	UGL	EE
ASB	5A	081484	CADMIUM	LT	2.0000	UGL	EE
ASB	5A	081484	CHLORIDE		9140.0000	UGL	EE
ASB	5A	081484	COLOR		10.0000	APC	EE
ASB	5A	081484	SPECIFIC CONDUCTANCE		62.0000	UMHC	FD
ASB	5A	081484	CHROMIUM	LT	4.0000	UGL	EE
ASB	5A	081484	CHROMIUM	LT	4.0000	UGL	EE
ASB	5A	081484	COPPER	LT	4.0000	UGL	EE
ASB	5A	081484	COPPER	LT	4.0000	UGL	EE
ASB	5A	081484	CYANIDE	LT	5.0000	UGL	EE
ASB	5A	081484	DISSOLVED ORGANIC CARBON	LT	5000.0000	UGL	EE
ASB	5A	081484	FLUORIDE		110.0000	UGL	EE
ASB	5A	081484	IRON		40.0000	UGL	EE
ASB	5A	081484	IRON		33.0000	UGL	EE
ASB	5A	081484	GC SCAN	LT	40.0000	UGL	EE
ASB	5A	081484	MERCURY	LT	0.2000	UGL	EE
ASB	5A	081484	MANGANESE		30.0000	UGL	EE
ASB	5A	081484	MANGANESE		29.0000	UGL	EE
ASB	5A	081484	SODIUM		4000.0000	UGL	EE
ASB	5A	081484	SODIUM		4110.0000	UGL	EE
ASB	5A	081484	NICKEL	LT	4.0000	UGL	EE
ASB	5A	081484	NICKEL	LT	4.0000	UGL	EE
ASB	5A	081484	NITRITE AS NITROGEN	LT	500.0000	UGL	EE
ASB	5A	081484	NITRATE AS NITROGEN	LT	500.0000	UGL	EE
ASB	5A	081484	ODOR		4.0000	THON	EE
ASB	5A	081484	LEAD		14.0000	UGL	EE
ASB	5A	081484	LEAD		13.0000	UGL	EE
ASB	5A	081484	PH		4.9000	PH	FD
ASB	5A	081484	PHENOLS		3.0000	UGL	EE
ASB	5A	081484	SELENIUM	LT	1.0000	UGL	EE
ASB	5A	081484	SELENIUM	LT	1.0000	UGL	EE
ASB	5A	081484	SILVEX	LT	2.0000	UGL	EE
ASB	5A	081484	SULFATE	LT	10000.0000	UGL	EE
ASB	5A	081484	SULFIDE	LT	1000.0000	UGL	EE
ASB	5A	081484	SURFACTANTS	LT	10.0000	UGL	EE
ASB	5A	081484	TOTAL DISSOLVED SOLIDS		60000.0000	UGL	EE
ASB	5A	081484	TOTAL DISSOLVED SOLIDS		54000.0000	UGL	EE
ASB	5A	081484	TOTAL ORGANIC CARBON	LT	5000.0000	UGL	EE
ASB	5A	081484	TOTAL RADIUM		4.0000	PCL	CP
ASB	5A	081484	TOTAL ORGANIC HALOGENS		75.0000	UGL	MM
ASB	5A	081484	TURBIDITY		135.0000	TU	EE
ASB	5A	081484	2,4-DICHLOROPHENOXYACETIC ACID	LT	20.0000	UGL	EE
ASB	5A	081484	ZINC		47.0000	UGL	EE
ASB	5A	081484	ZINC		42.0000	UGL	EE
ASB	5A	102284	SILVER	LT	2.0000	UGL	EE
ASB	5A	102284	GROSS ALPHA	LT	2.0000	PCL	CP
ASB	5A	102284	ARSENIC	LT	1.0000	UGL	EE
ASB	5A	102284	BARIUM		16.0000	UGL	EE
ASB	5A	102284	BERYLLIUM	LT	2.0000	UGL	EE
ASB	5A	102284	NONVOLATILE BETA	LT	3.0000	PCL	CP

Raw Data for ASB 5A

ASB	5A	102284	CADMIUM	LT	2.0000	UGL	EE
ASB	5A	102284	CHLORIDE		9100.0000	UGL	EE
ASB	5A	102284	COLOR		0.0000	APC	EE
ASB	5A	102284	SPECIFIC CONDUCTANCE		87.0000	UMHC	FD
ASB	5A	102284	CORROSIVITY		0.0039	MMY	EE
ASB	5A	102284	CHROMIUM	LT	4.0000	UGL	EE
ASB	5A	102284	COPPER		6.0000	UGL	EE
ASB	5A	102284	CYANIDE	LT	5.0000	UGL	EE
ASB	5A	102284	DISSOLVED ORGANIC CARBON	LT	5000.0000	UGL	EE
ASB	5A	102284	ENDRIN	LT	0.0400	UGL	EE
ASB	5A	102284	FLUORIDE	LT	100.0000	UGL	EE
ASB	5A	102284	IRON		54.0000	UGL	EE
ASB	5A	102284	GC SCAN		54.0000	UGL	EE
ASB	5A	102284	MERCURY	LT	0.2000	UGL	EE
ASB	5A	102284	LINDANE	LT	1.0000	UGL	EE
ASB	5A	102284	METHOXYCHLOR	LT	20.0000	UGL	EE
ASB	5A	102284	MANGANESE		24.0000	UGL	EE
ASB	5A	102284	SODIUM		5320.0000	UGL	EE
ASB	5A	102284	NICKEL	LT	4.0000	UGL	EE
ASB	5A	102284	NITRITE AS NITROGEN	LT	500.0000	UGL	EE
ASB	5A	102284	NITRATE AS NITROGEN	LT	500.0000	UGL	EE
ASB	5A	102284	ODOR		8.0000	THON	EE
ASB	5A	102284	LEAD		9.0000	UGL	EE
ASB	5A	102284	PH		4.5000	PH	FD
ASB	5A	102284	PHENOLS	LT	2.0000	UGL	EE
ASB	5A	102284	SELENIUM	LT	1.0000	UGL	EE
ASB	5A	102284	SILVEX	LT	2.0000	UGL	EE
ASB	5A	102284	SULFATE	LT	5000.0000	UGL	EE
ASB	5A	102284	SULFIDE	LT	1000.0000	UGL	EE
ASB	5A	102284	SURFACTANTS	LT	10.0000	UGL	EE
ASB	5A	102284	TOTAL DISSOLVED SOLIDS		30000.0000	UGL	EE
ASB	5A	102284	TOTAL ORGANIC CARBON	LT	5000.0000	UGL	EE
ASB	5A	102284	TOTAL RADIUM		2.0000	PCL	CP
ASB	5A	102284	TOTAL ORGANIC HALOGENS		160.0000	UGL	MM
ASB	5A	102284	TURBIDITY		1.8000	TU	EE
ASB	5A	102284	TOXAPHENE	LT	1.0000	UGL	EE
ASB	5A	102284	2,4-DICHLOROPHENOXYACETIC ACID	LT	20.0000	UGL	EE
ASB	5A	102284	ZINC		268.0000	UGL	EE
ASB	5A	022585	SILVER	LT	2.0000	UGL	EE
ASB	5A	022585	GROSS ALPHA		5.0000	PCL	CP
ASB	5A	022585	ARSENIC	LT	1.0000	UGL	EE
ASB	5A	022585	BARIUM		10.0000	UGL	EE
ASB	5A	022585	NONVOLATILE BETA		3.0000	PCL	CP
ASB	5A	022585	CADMIUM	LT	2.0000	UGL	EE
ASB	5A	022585	CHLORIDE		11660.0000	UGL	EE
ASB	5A	022585	SPECIFIC CONDUCTANCE		87.0000	UMHC	FD
ASB	5A	022585	CHROMIUM	LT	4.0000	UGL	EE
ASB	5A	022585	ENDRIN	LT	0.0400	UGL	EE
ASB	5A	022585	FLUORIDE	LT	100.0000	UGL	EE
ASB	5A	022585	IRON	LT	4.0000	UGL	EE
ASB	5A	022585	MERCURY		0.3700	UGL	EE
ASB	5A	022585	LINDANE	LT	1.0000	UGL	EE
ASB	5A	022585	METHOXYCHLOR	LT	20.0000	UGL	EE
ASB	5A	022585	MANGANESE		4.0000	UGL	EE
ASB	5A	022585	SODIUM		7410.0000	UGL	EE
ASB	5A	022585	NITRATE AS NITROGEN		1150.0000	UGL	EE
ASB	5A	022585	NITRATE AS NITROGEN		1150.0000	UGL	EE
ASB	5A	022585	LEAD	LT	4.0000	UGL	EE
ASB	5A	022585	PH		4.4000	PH	FD
ASB	5A	022585	PHENOLS	LT	2.0000	UGL	EE
ASB	5A	022585	PHENOLS	LT	2.0000	UGL	EE
ASB	5A	022585	SELENIUM	LT	1.0000	UGL	EE
ASB	5A	022585	SILVEX	LT	2.0000	UGL	EE
ASB	5A	022585	SULFATE	LT	5000.0000	UGL	EE

Raw Data for ASB 5A

ASB	5A	022585	SULFATE	LT	5000.0000	UGL	EE
ASB	5A	022585	TOTAL ORGANIC CARBON		334.0000	UGL	EE
ASB	5A	022585	TOTAL RADIUM		2.0000	PCL	CP
ASB	5A	022585	TOTAL ORGANIC HALOGENS		356.4000	UGL	EE
ASB	5A	022585	TOTAL ORGANIC HALOGENS		251.2000	UGL	EE
ASB	5A	022585	TURBIDITY		2.2000	TU	EE
ASB	5A	022585	TOXAPHENE	LT	1.0000	UGL	EE
ASB	5A	022585	2,4-DICHLOROPHENOXYACETIC ACID	LT	20.0000	UGL	EE
ASB	5A	042385	SPECIFIC CONDUCTANCE		61.0000	UMHC	FD
ASB	5A	042385	CHROMIUM	LT	4.0000	UGL	EE
ASB	5A	042385	MERCURY	LT	0.2000	UGL	EE
ASB	5A	042385	MERCURY	LT	0.2000	UGL	EE
ASB	5A	042385	SODIUM		6720.0000	UGL	EE
ASB	5A	042385	LEAD		8.0000	UGL	EE
ASB	5A	042385	PH		4.7000	PH	FD
ASB	5A	042385	TOTAL ORGANIC CARBON		669.0000	UGL	EE
ASB	5A	042385	TOTAL ORGANIC HALOGENS		295.0000	UGL	EE
ASB	5A	082685	SPECIFIC CONDUCTANCE		52.0000	UMHC	FD
ASB	5A	082685	CHROMIUM	LT	4.0000	UGL	EE
ASB	5A	082685	MERCURY		0.2100	UGL	EE
ASB	5A	082685	MERCURY		0.2600	UGL	EE
ASB	5A	082685	SODIUM		7380.0000	UGL	EE
ASB	5A	082685	LEAD	LT	10.0000	UGL	EE
ASB	5A	082685	PH		4.4000	PH	FD
ASB	5A	082685	TOTAL ORGANIC CARBON		450.0000	UGL	EE
ASB	5A	082685	TOTAL ORGANIC HALOGENS		128.0000	UGL	EE
ASB	5A	102985	SPECIFIC CONDUCTANCE		38.0000	UMHC	FD
ASB	5A	102985	CHROMIUM	LT	4.0000	UGL	EE
ASB	5A	102985	MERCURY	LT	0.2000	UGL	EE
ASB	5A	102985	SODIUM		6210.0000	UGL	EE
ASB	5A	102985	LEAD		5.0000	UGL	EE
ASB	5A	102985	PH		4.3000	PH	FD
ASB	5A	102985	TOTAL ORGANIC CARBON		490.0000	UGL	EE
ASB	5A	102985	TOTAL ORGANIC HALOGENS		47.0000	UGL	EE
ASB	5A	021286	GROSS ALPHA		7.0000	PCL	CP
ASB	5A	021286	NONVOLATILE BETA		5.0000	PCL	CP
ASB	5A	021286	CHLORIDE		8100.0000	UGL	EE
ASB	5A	021286	SPECIFIC CONDUCTANCE		45.0000	UMHC	FD
ASB	5A	021286	IRON		39.0000	UGL	EE
ASB	5A	021286	MERCURY	LT	0.2000	UGL	EE
ASB	5A	021286	MANGANESE		11.0000	UGL	EE
ASB	5A	021286	SODIUM		5400.0000	UGL	EE
ASB	5A	021286	PH		4.3000	PH	FD
ASB	5A	021286	PHENOLS	LT	2.0000	UGL	EE
ASB	5A	021286	SULFATE	LT	5000.0000	UGL	EE
ASB	5A	021286	TOTAL ORGANIC CARBON	LT	1000.0000	UGL	EE
ASB	5A	021286	TOTAL RADIUM		4.0000	PCL	CP
ASB	5A	021286	TOTAL ORGANIC HALOGENS		60.0000	UGL	EE
ASB	5A	041886	SPECIFIC CONDUCTANCE		47.0000	UMHC	FD
ASB	5A	041886	CHROMIUM	LT	4.0000	UGL	EE
ASB	5A	041886	NICKEL	LT	4.0000	UGL	EE
ASB	5A	041886	LEAD		8.0000	UGL	EE
ASB	5A	041886	PH		4.9000	PH	FD
ASB	5A	041886	ZINC		5.0000	UGL	EE
ASB	5A	080686	GROSS ALPHA	LT	3.0000	PCL	RM
ASB	5A	080686	SPECIFIC CONDUCTANCE		54.0000	UMHC	FD
ASB	5A	080686	CHROMIUM	LT	4.0000	UGL	EE
ASB	5A	080686	MANGANESE		11.0000	UGL	EE
ASB	5A	080686	LEAD	LT	6.0000	UGL	EE
ASB	5A	080686	PH		4.4000	PH	FD
ASB	5A	080686	TOTAL ORGANIC CARBON	LT	1000.0000	UGL	EE
ASB	5A	080686	TOTAL RADIUM		2.5000	PCL	RM
ASB	5A	080686	TOTAL ORGANIC HALOGENS		110.0000	UGL	EE
ASB	5A	101186	BROMODICHLOROMETHANE	LT	5.0000	UGL	EE

Raw Data for ASB 5A

ASB	5A	101186	TRICHLOROFLUOROMETHANE	LT	5.0000	UGL	EE
ASB	5A	101186	CARBON TETRACHLORIDE	LT	5.0000	UGL	EE
ASB	5A	101186	BROMOFORM	LT	10.0000	UGL	EE
ASB	5A	101186	CHLOROFORM	LT	5.0000	UGL	EE
ASB	5A	101186	BROMOMETHANE	LT	10.0000	UGL	EE
ASB	5A	101186	CHLOROMETHANE	LT	10.0000	UGL	EE
ASB	5A	101186	CHLOROBENZENE	LT	5.0000	UGL	EE
ASB	5A	101186	SPECIFIC CONDUCTANCE		53.0000	UMHC	FD
ASB	5A	101186	CHROMIUM	LT	4.0000	UGL	EE
ASB	5A	101186	CHLOROETHENE	LT	10.0000	UGL	EE
ASB	5A	101186	CHLOROETHANE	LT	10.0000	UGL	EE
ASB	5A	101186	BENZENE	LT	5.0000	UGL	EE
ASB	5A	101186	DIBROMOCHLOROMETHANE	LT	5.0000	UGL	EE
ASB	5A	101186	ETHYLBENZENE	LT	5.0000	UGL	EE
ASB	5A	101186	TOLUENE-D8		96.0000	PER	EE
ASB	5A	101186	TOLUENE	LT	5.0000	UGL	EE
ASB	5A	101186	SODIUM		4620.0000	UGL	EE
ASB	5A	101186	P-BROMOFLUOROBENZENE		102.0000	PER	EE
ASB	5A	101186	PH		4.7000	PH	FD
ASB	5A	101186	1,1,2,2-TETRACHLOROETHANE	LT	10.0000	UGL	EE
ASB	5A	101186	TETRACHLOROETHYLENE	LT	5.0000	UGL	EE
ASB	5A	101186	TOTAL ORGANIC HALOGENS		124.0000	UGL	EE
ASB	5A	101186	TRICHLOROETHYLENE		185.0000	UGL	EE
ASB	5A	101186	TRANS-1,2-DICHLOROETHENE	LT	5.0000	UGL	EE
ASB	5A	101186	1,1-DICHLOROETHYLENE	LT	5.0000	UGL	EE
ASB	5A	101186	1,1-DICHLOROETHANE	LT	5.0000	UGL	EE
ASB	5A	101186	1,1,1-TRICHLOROETHANE	LT	5.0000	UGL	EE
ASB	5A	101186	1,1,2-TRICHLOROETHANE	LT	5.0000	UGL	EE
ASB	5A	101186	1,2-DICHLOROETHANE-D4		98.0000	PER	EE
ASB	5A	101186	1,2-DICHLOROETHANE	LT	1.0000	UGL	EE
ASB	5A	101186	1,2-DICHLOROPROPANE	LT	10.0000	UGL	EE
ASB	5A	101186	CIS-1,3-DICHLOROPROPENE	LT	5.0000	UGL	EE
ASB	5A	101186	TRANS-1,3-DICHLOROPROPENE	LT	5.0000	UGL	EE
ASB	5A	101186	2-CHLOROETHYLVINYL ETHER	LT	10.0000	UGL	EE
ASB	5A	020487	SILVER	LT	2.0000	UGL	EE
ASB	5A	020487	SILVER	LT	2.0000	UGL	EE
ASB	5A	020487	SILVER	LT	0.5000	UGL	EC
ASB	5A	020487	GROSS ALPHA		3.5000	PCL	RM
ASB	5A	020487	GROSS ALPHA		2.3000	PCL	RM
ASB	5A	020487	GROSS ALPHA		2.0000	PCL	EC
ASB	5A	020487	ARSENIC	LT	2.0000	UGL	EE
ASB	5A	020487	ARSENIC	LT	2.0000	UGL	EE
ASB	5A	020487	ARSENIC	LT	3.0000	UGL	EC
ASB	5A	020487	BARIUM		10.0000	UGL	EE
ASB	5A	020487	BARIUM		12.0000	UGL	EE
ASB	5A	020487	BARIUM	LT	100.0000	UGL	EC
ASB	5A	020487	NONVOLATILE BETA		6.2000	PCL	RM
ASB	5A	020487	NONVOLATILE BETA		9.3000	PCL	RM
ASB	5A	020487	NONVOLATILE BETA		5.1000	PCL	EC
ASB	5A	020487	BROMODICHLOROMETHANE	LT	1.0000	UGL	EC
ASB	5A	020487	CALCIUM		1540.0000	UGL	EE
ASB	5A	020487	CALCIUM		1560.0000	UGL	EE
ASB	5A	020487	CALCIUM		1710.0000	UGL	EC
ASB	5A	020487	DICHLORODIFLUOROMETHANE	LT	3.0000	UGL	EC
ASB	5A	020487	TRICHLOROFLUOROMETHANE	LT	1.0000	UGL	EC
ASB	5A	020487	CARBON TETRACHLORIDE	LT	1.0000	UGL	EE
ASB	5A	020487	CARBON TETRACHLORIDE	LT	1.0000	UGL	EE
ASB	5A	020487	CARBON TETRACHLORIDE	LT	1.0000	UGL	EC
ASB	5A	020487	CADMIUM	LT	2.0000	UGL	EE
ASB	5A	020487	CADMIUM	LT	2.0000	UGL	EE
ASB	5A	020487	CADMIUM	LT	6.0000	UGL	EC
ASB	5A	020487	BROMOFORM	LT	2.0000	UGL	EC
ASB	5A	020487	CHLOROFORM	LT	1.0000	UGL	EE
ASB	5A	020487	CHLOROFORM	LT	1.0000	UGL	EE

Raw Data for ASB 5A

ASB	5A	020487	CHLOROFORM	LT	1.0000	UGL	EC
ASB	5A	020487	METHYLENE CHLORIDE	LT	1.0000	UGL	EC
ASB	5A	020487	BROMOMETHANE	LT	2.0000	UGL	EC
ASB	5A	020487	CHLOROMETHANE	LT	1.0000	UGL	EC
ASB	5A	020487	CHLORIDE		6400.0000	UGL	EE
ASB	5A	020487	CHLORIDE		5300.0000	UGL	EE
ASB	5A	020487	CHLORIDE		7810.0000	UGL	EC
ASB	5A	020487	CHLOROBENZENE	LT	1.0000	UGL	EC
ASB	5A	020487	SPECIFIC CONDUCTANCE		38.0000	UMHC	FD
ASB	5A	020487	SPECIFIC CONDUCTANCE		38.0000	UMHC	FD
ASB	5A	020487	SPECIFIC CONDUCTANCE		44.3000	UMHC	EC
ASB	5A	020487	CHROMIUM	LT	4.0000	UGL	EE
ASB	5A	020487	CHROMIUM	LT	4.0000	UGL	EE
ASB	5A	020487	CHROMIUM	LT	50.0000	UGL	EC
ASB	5A	020487	COPPER		12.0000	UGL	EE
ASB	5A	020487	COPPER		10.0000	UGL	EE
ASB	5A	020487	COPPER	LT	50.0000	UGL	EC
ASB	5A	020487	CIS-1,3-DICHLOROPROPYLENE	LT	1.0000	UGL	EC
ASB	5A	020487	CHLOROETHENE	LT	1.0000	UGL	EC
ASB	5A	020487	CHLOROETHANE	LT	1.0000	UGL	EC
ASB	5A	020487	BENZENE	LT	1.0000	UGL	EC
ASB	5A	020487	DIBROMOCHLOROMETHANE	LT	1.0000	UGL	EC
ASB	5A	020487	ETHYLBENZENE	LT	1.0000	UGL	EC
ASB	5A	020487	FLUORIDE	LT	100.0000	UGL	EE
ASB	5A	020487	FLUORIDE	LT	100.0000	UGL	EE
ASB	5A	020487	FLUORIDE	LT	100.0000	UGL	EC
ASB	5A	020487	IRON		27.0000	UGL	EE
ASB	5A	020487	IRON		29.0000	UGL	EE
ASB	5A	020487	IRON		20.0000	UGL	EC
ASB	5A	020487	MERCURY	LT	0.2000	UGL	EE
ASB	5A	020487	MERCURY	LT	0.2000	UGL	EE
ASB	5A	020487	MERCURY	LT	0.2000	UGL	EE
ASB	5A	020487	MERCURY	LT	0.1000	UGL	EC
ASB	5A	020487	POTASSIUM		400.0000	UGL	EE
ASB	5A	020487	POTASSIUM		400.0000	UGL	EE
ASB	5A	020487	POTASSIUM		330.0000	UGL	EC
ASB	5A	020487	TOLUENE	LT	1.0000	UGL	EC
ASB	5A	020487	MAGNESIUM		870.0000	UGL	EE
ASB	5A	020487	MAGNESIUM		880.0000	UGL	EE
ASB	5A	020487	MAGNESIUM		1030.0000	UGL	EC
ASB	5A	020487	MANGANESE		11.0000	UGL	EE
ASB	5A	020487	MANGANESE		13.0000	UGL	EE
ASB	5A	020487	MANGANESE	LT	20.0000	UGL	EC
ASB	5A	020487	SODIUM		5420.0000	UGL	EE
ASB	5A	020487	SODIUM		4530.0000	UGL	EE
ASB	5A	020487	SODIUM		2390.0000	UGL	EC
ASB	5A	020487	NICKEL		5.0000	UGL	EE
ASB	5A	020487	NICKEL	LT	4.0000	UGL	EE
ASB	5A	020487	NICKEL	LT	50.0000	UGL	EC
ASB	5A	020487	NITRATE AS NITROGEN		350.0000	UGL	EE
ASB	5A	020487	NITRATE AS NITROGEN		310.0000	UGL	EE
ASB	5A	020487	NITRATE AS NITROGEN		570.0000	UGL	EC
ASB	5A	020487	LEAD		7.0000	UGL	EE
ASB	5A	020487	LEAD	LT	6.0000	UGL	EE
ASB	5A	020487	LEAD		4.6000	UGL	EC
ASB	5A	020487	PH		5.3000	PH	FD
ASB	5A	020487	PH		5.3000	PH	FD
ASB	5A	020487	PH		4.8700	PH	EC
ASB	5A	020487	PHENOLS	LT	2.0000	UGL	EE
ASB	5A	020487	PHENOLS	LT	2.0000	UGL	EE
ASB	5A	020487	PHENOLS		5.0000	UGL	EC
ASB	5A	020487	SELENIUM	LT	2.0000	UGL	EE
ASB	5A	020487	SELENIUM	LT	2.0000	UGL	EE
ASB	5A	020487	SELENIUM	LT	6.0000	UGL	EC

Raw Data for ASB 5A

ASB	5A	020487	SILICA		2490.0000	UGL	EE
ASB	5A	020487	SILICA		2490.0000	UGL	EE
ASB	5A	020487	SILICA		7100.0000	UGL	EC
ASB	5A	020487	SULFATE		12000.0000	UGL	EE
ASB	5A	020487	SULFATE		7500.0000	UGL	EE
ASB	5A	020487	SULFATE		5000.0000	UGL	EC
ASB	5A	020487	1,1,2,2-TETRACHLOROETHANE	LT	1.0000	UGL	EC
ASB	5A	020487	TETRACHLOROETHYLENE		2.2000	UGL	EE
ASB	5A	020487	TETRACHLOROETHYLENE		5.6000	UGL	EE
ASB	5A	020487	TETRACHLOROETHYLENE		6.0500	UGL	EC
ASB	5A	020487	TOTAL DISSOLVED SOLIDS		16000.0000	UGL	EE
ASB	5A	020487	TOTAL DISSOLVED SOLIDS		20000.0000	UGL	EE
ASB	5A	020487	TOTAL DISSOLVED SOLIDS		27000.0000	UGL	EC
ASB	5A	020487	TOTAL ORGANIC CARBON	LT	1000.0000	UGL	EE
ASB	5A	020487	TOTAL ORGANIC CARBON	LT	1000.0000	UGL	EE
ASB	5A	020487	TOTAL ORGANIC CARBON		1600.0000	UGL	EC
ASB	5A	020487	TOTAL RADIUM		1.7000	PCL	RM
ASB	5A	020487	TOTAL RADIUM		3.5000	PCL	RM
ASB	5A	020487	TOTAL RADIUM		1.3000	PCL	EC
ASB	5A	020487	TOTAL ORGANIC HALOGENS		56.0000	UGL	EE
ASB	5A	020487	TOTAL ORGANIC HALOGENS		60.0000	UGL	EE
ASB	5A	020487	TOTAL ORGANIC HALOGENS		87.0000	UGL	EC
ASB	5A	020487	TOTAL PHOSPHATES		60.0000	UGL	EE
ASB	5A	020487	TOTAL PHOSPHATES		60.0000	UGL	EE
ASB	5A	020487	TOTAL PHOSPHATES		36.0000	UGL	EC
ASB	5A	020487	TRICHLOROETHYLENE		96.4000	UGL	EE
ASB	5A	020487	TRICHLOROETHYLENE		69.0000	UGL	EE
ASB	5A	020487	TRICHLOROETHYLENE		85.5000	UGL	EC
ASB	5A	020487	TRITIUM		3.5900	PCML	RM
ASB	5A	020487	TRITIUM		3.8900	PCML	RM
ASB	5A	020487	TTHM	LT	2.0000	UGL	EC
ASB	5A	020487	TRANS-1,2-DICHLOROETHENE	LT	1.0000	UGL	EC
ASB	5A	020487	TRANS-1,3-DICHLOROPROPENE	LT	1.0000	UGL	EC
ASB	5A	020487	1,1-DICHLOROETHYLENE	LT	1.0000	UGL	EC
ASB	5A	020487	1,1-DICHLOROETHANE	LT	1.0000	UGL	EC
ASB	5A	020487	1,1,1-TRICHLOROETHANE	LT	1.0000	UGL	EE
ASB	5A	020487	1,1,1-TRICHLOROETHANE	LT	1.0000	UGL	EE
ASB	5A	020487	1,1,1-TRICHLOROETHANE	LT	1.0000	UGL	EC
ASB	5A	020487	1,1,2-TRICHLOROETHANE	LT	1.0000	UGL	EC
ASB	5A	020487	1,2-DICHLOROBENZENE	LT	1.0000	UGL	EC
ASB	5A	020487	1,2-DICHLOROETHANE	LT	1.0000	UGL	EC
ASB	5A	020487	1,2-DICHLOROPROPANE	LT	1.0000	UGL	EC
ASB	5A	020487	1,3-DICHLOROBENZENE	LT	1.0000	UGL	EC
ASB	5A	020487	1,4-DICHLOROBENZENE	LT	1.0000	UGL	EC
ASB	5A	020487	ZINC		4.0000	UGL	EE
ASB	5A	020487	ZINC		26.0000	UGL	EE
ASB	5A	020487	ZINC	LT	20.0000	UGL	EC
ASB	5A	042587	CARBON TETRACHLORIDE	LT	1.0000	UGL	EE
ASB	5A	042587	CHLOROFORM	LT	1.0000	UGL	EE
ASB	5A	042587	SPECIFIC CONDUCTANCE		39.0000	UMHC	FD
ASB	5A	042587	PH		5.2000	PH	FD
ASB	5A	042587	TETRACHLOROETHYLENE		1.1000	UGL	EE
ASB	5A	042587	TRICHLOROETHYLENE		22.6000	UGL	EE
ASB	5A	042587	1,1,1-TRICHLOROETHANE	LT	1.0000	UGL	EE
ASB	5A	080287	GROSS ALPHA		1.7000	PCL	RM
ASB	5A	080287	CARBON TETRACHLORIDE	LT	1.0000	UGL	EE
ASB	5A	080287	CHLOROFORM	LT	1.0000	UGL	EE
ASB	5A	080287	SPECIFIC CONDUCTANCE		38.0000	UMHC	FD
ASB	5A	080287	CHROMIUM	LT	4.0000	UGL	EE
ASB	5A	080287	IRON		74.0000	UGL	EE
ASB	5A	080287	MANGANESE		19.0000	UGL	EE
ASB	5A	080287	SODIUM		2600.0000	UGL	EE
ASB	5A	080287	LEAD		10.0000	UGL	EE
ASB	5A	080287	PH		6.3000	PH	FD

Raw Data for ASB 5A

ASB	5A	080287	TETRACHLOROETHYLENE		1.7100	UGL	EE
ASB	5A	080287	TOTAL ORGANIC CARBON	LT	1000.0000	UGL	EE
ASB	5A	080287	TOTAL RADIUM		2.9000	PCL	RM
ASB	5A	080287	TOTAL ORGANIC HALOGENS		19.0000	UGL	EE
ASB	5A	080287	TRICHLOROETHYLENE		27.7000	UGL	EE
ASB	5A	080287	1,1,1-TRICHLOROETHANE	LT	1.0000	UGL	EE
ASB	5A	102287	CARBON TETRACHLORIDE	LT	1.0000	UGL	EE
ASB	5A	102287	CHLOROFORM	LT	1.0000	UGL	EE
ASB	5A	102287	SPECIFIC CONDUCTANCE		46.0000	UMHC	FD
ASB	5A	102287	PH		4.6000	PH	FD
ASB	5A	102287	TETRACHLOROETHYLENE		2.4600	UGL	EE
ASB	5A	102287	TRICHLOROETHYLENE		15.2000	UGL	EE
ASB	5A	102287	1,1,1-TRICHLOROETHANE	LT	1.0000	UGL	EE
ASB	5A	022688	GROSS ALPHA		4.6000	PCL	EE
ASB	5A	022688	NONVOLATILE BETA		3.2000	PCL	EE
ASB	5A	022688	CARBON TETRACHLORIDE	LT	1.0000	UGL	EE
ASB	5A	022688	CADMIUM	LT	2.0000	UGL	EE
ASB	5A	022688	CHLOROFORM	LT	1.0000	UGL	EE
ASB	5A	022688	CHLORIDE		5800.0000	UGL	EE
ASB	5A	022688	CHLORIDE		5800.0000	UGL	EE
ASB	5A	022688	SPECIFIC CONDUCTANCE		45.0000	UMHC	FD
ASB	5A	022688	COPPER	LT	4.0000	UGL	EE
ASB	5A	022688	IRON		20.0000	UGL	EE
ASB	5A	022688	MERCURY		0.2000	UGL	EE
ASB	5A	022688	MERCURY	LT	0.2000	UGL	EE
ASB	5A	022688	MANGANESE		14.0000	UGL	EE
ASB	5A	022688	SODIUM		3190.0000	UGL	EE
ASB	5A	022688	NICKEL	LT	4.0000	UGL	EE
ASB	5A	022688	LEAD	LT	6.0000	UGL	EE
ASB	5A	022688	PH		4.7000	PH	FD
ASB	5A	022688	SULFATE	LT	5000.0000	UGL	EE
ASB	5A	022688	SULFATE	LT	5000.0000	UGL	EE
ASB	5A	022688	TETRACHLOROETHYLENE		2.9000	UGL	EE
ASB	5A	022688	TOTAL ORGANIC CARBON	LT	1000.0000	UGL	EE
ASB	5A	022688	TOTAL RADIUM		1.8000	PCL	EE
ASB	5A	022688	TOTAL ORGANIC HALOGENS		6.0000	UGL	EE
ASB	5A	022688	TRICHLOROETHYLENE		11.4000	UGL	EE
ASB	5A	022688	1,1,1-TRICHLOROETHANE	LT	1.0000	UGL	EE
ASB	5A	040588	SPECIFIC CONDUCTANCE		47.0000	UMHC	FD
ASB	5A	040588	PH		5.8000	PH	FD
ASB	5A	070788	SILVER	LT	2.0000	UGL	EE
ASB	5A	070788	GROSS ALPHA		4.9300	PCL	EE
ASB	5A	070788	ARSENIC	LT	2.0000	UGL	EE
ASB	5A	070788	BARIUM		13.0000	UGL	EE
ASB	5A	070788	NONVOLATILE BETA		2.4000	PCL	EE
ASB	5A	070788	CALCIUM		1890.0000	UGL	EE
ASB	5A	070788	CARBON TETRACHLORIDE	LT	1.0000	UGL	EE
ASB	5A	070788	CADMIUM	LT	2.0000	UGL	EE
ASB	5A	070788	CERIUM 144		0.0000	PCML	SR
ASB	5A	070788	CHLOROFORM	LT	1.0000	UGL	EE
ASB	5A	070788	CHLOROFORM	LT	10.0000	UGL	MA
ASB	5A	070788	CHLORIDE		4700.0000	UGL	EE
ASB	5A	070788	SPECIFIC CONDUCTANCE		38.0000	UMHC	FD
ASB	5A	070788	COBALT 60		0.0000	PCML	SR
ASB	5A	070788	CHROMIUM	LT	4.0000	UGL	EE
ASB	5A	070788	CHROMIUM 51		0.0000	PCML	SR
ASB	5A	070788	CESIUM 134		0.0000	PCML	SR
ASB	5A	070788	CESIUM 137		0.0000	PCML	SR
ASB	5A	070788	FLUORIDE	LT	100.0000	UGL	EE
ASB	5A	070788	IRON		152.0000	UGL	EE
ASB	5A	070788	MERCURY	LT	0.2000	UGL	EE
ASB	5A	070788	IODINE 131		0.0000	PCML	SR
ASB	5A	070788	POTASSIUM	LT	500.0000	UGL	EE
ASB	5A	070788	MAGNESIUM		1030.0000	UGL	EE

Raw Data for ASB 5A

ASB	5A	070788	MANGANESE		28.0000	UGL	EE
ASB	5A	070788	SODIUM		2760.0000	UGL	EE
ASB	5A	070788	NITRATE AS NITROGEN		310.0000	UGL	EE
ASB	5A	070788	NITRATE AS NITROGEN		310.0000	UGL	EE
ASB	5A	070788	LEAD	LT	6.0000	UGL	EE
ASB	5A	070788	PH		5.2000	PH	FD
ASB	5A	070788	PHENOLS	LT	5.0000	UGL	EE
ASB	5A	070788	RUTHENIUM 103		0.0000	PCML	SR
ASB	5A	070788	RUTHENIUM 106		0.0000	PCML	SR
ASB	5A	070788	ANTIMONY 125		0.0000	PCML	SR
ASB	5A	070788	SELENIUM	LT	2.0000	UGL	EE
ASB	5A	070788	SILICA		1820.0000	UGL	EE
ASB	5A	070788	SULFATE	LT	5000.0000	UGL	EE
ASB	5A	070788	TETRACHLOROETHYLENE		1.8000	UGL	EE
ASB	5A	070788	TETRACHLOROETHYLENE		6.1900	UGL	MA
ASB	5A	070788	TOTAL ORGANIC CARBON	LT	1000.0000	UGL	EE
ASB	5A	070788	TOTAL RADIUM		2.0400	PCL	EE
ASB	5A	070788	TOTAL ORGANIC HALOGENS	LT	5.0000	UGL	EE
ASB	5A	070788	TOTAL PHOSPHATES	LT	20.0000	UGL	EE
ASB	5A	070788	TRICHLOROETHYLENE		3.3600	UGL	EE
ASB	5A	070788	TRICHLOROETHYLENE		21.5000	UGL	MA
ASB	5A	070788	TRITIUM		3.0300	PCML	EE
ASB	5A	070788	TRANS-1,2-DICHLOROETHENE	LT	10.0000	UGL	MA
ASB	5A	070788	1,1-DICHLOROETHYLENE	LT	10.0000	UGL	MA
ASB	5A	070788	1,1,1-TRICHLOROETHANE	LT	1.0000	UGL	EE
ASB	5A	070788	1,1,1-TRICHLOROETHANE	LT	10.0000	UGL	MA
ASB	5A	070788	ZIRCONIUM/NIOBIUM 95		0.0000	PCML	SR
ASB	5A	100288	SPECIFIC CONDUCTANCE		41.0000	UMHC	FD
ASB	5A	100288	PH		5.1000	PH	FD
ASB	5A	032689	SILVER	LT	2.0000	UGL	EE
ASB	5A	032689	GROSS ALPHA		3.8200	PCL	RM
ASB	5A	032689	AMERICIUM 241	LT	0.4000	PCL	TE
ASB	5A	032689	ARSENIC	LT	2.0000	UGL	EE
ASB	5A	032689	BARIUM		13.0000	UGL	EE
ASB	5A	032689	BARIUM 140	LT	6.0000	PCL	TE
ASB	5A	032689	NONVOLATILE BETA		2.3000	PCL	RM
ASB	5A	032689	BERYLLIUM 7	LT	30.0000	PCL	TE
ASB	5A	032689	CALCIUM		1760.0000	UGL	EE
ASB	5A	032689	CARBON TETRACHLORIDE	LT	1.0000	UGL	EE
ASB	5A	032689	CADMIUM	LT	2.0000	UGL	EE
ASB	5A	032689	CERIUM 141	LT	8.0000	PCL	TE
ASB	5A	032689	CERIUM 144		0.0000	PCML	SR
ASB	5A	032689	CERIUM 144	LT	30.0000	PCL	TE
ASB	5A	032689	CHLOROFORM	LT	1.0000	UGL	EE
ASB	5A	032689	CHLOROFORM	LT	1.0000	UGL	MA
ASB	5A	032689	CHLORIDE		5200.0000	UGL	EE
ASB	5A	032689	CURIUM 242	LT	0.4000	PCL	TE
ASB	5A	032689	CURIUM 243/244	LT	0.4000	PCL	TE
ASB	5A	032689	SPECIFIC CONDUCTANCE		39.0000	UMHC	FD
ASB	5A	032689	COBALT 58	LT	3.0000	PCL	TE
ASB	5A	032689	COBALT 60		0.0000	PCML	SR
ASB	5A	032689	COBALT 60	LT	4.0000	PCL	TE
ASB	5A	032689	CHROMIUM	LT	4.0000	UGL	EE
ASB	5A	032689	CHROMIUM 51		0.0000	PCML	SR
ASB	5A	032689	CESIUM 134		0.0000	PCML	SR
ASB	5A	032689	CESIUM 134	LT	3.0000	PCL	TE
ASB	5A	032689	CESIUM 137		0.0000	PCML	SR
ASB	5A	032689	CESIUM 137	LT	4.0000	PCL	TE
ASB	5A	032689	COPPER		5.0000	UGL	EE
ASB	5A	032689	FLUORIDE	LT	100.0000	UGL	EE
ASB	5A	032689	FLUORIDE	LT	100.0000	UGL	EE
ASB	5A	032689	IRON		101.0000	UGL	EE
ASB	5A	032689	IRON 59	LT	7.0000	PCL	TE
ASB	5A	032689	MERCURY	LT	0.2000	UGL	EE

Raw Data for ASB 5A

ASB	5A	032689	IODINE 131		0.0000	PCML	SR
ASB	5A	032689	IODINE 131	LT	7.0000	PCL	TE
ASB	5A	032689	POTASSIUM	LT	500.0000	UGL	EE
ASB	5A	032689	POTASSIUM 40	LT	60.0000	PCL	TE
ASB	5A	032689	MAGNESIUM		827.0000	UGL	EE
ASB	5A	032689	MANGANESE		11.0000	UGL	EE
ASB	5A	032689	MANGANESE 54	LT	3.0000	PCL	TE
ASB	5A	032689	SODIUM		2510.0000	UGL	EE
ASB	5A	032689	NICKEL	LT	4.0000	UGL	EE
ASB	5A	032689	NITRATE AS NITROGEN		211.0000	UGL	EE
ASB	5A	032689	LEAD	LT	6.0000	UGL	EE
ASB	5A	032689	PH		5.4000	PH	FD
ASB	5A	032689	PHENOLS	LT	5.0000	UGL	EE
ASB	5A	032689	PLUTONIUM 238		4.4000	PCL	TE
ASB	5A	032689	PLUTONIUM 239/240		2.7000	PCL	TE
ASB	5A	032689	RADIUM 226	LT	80.0000	PCL	TE
ASB	5A	032689	RADIUM 226		2.6000	PCL	TE
ASB	5A	032689	RADIUM 228		1.1000	PCL	TE
ASB	5A	032689	RUTHENIUM 103		0.0000	PCML	SR
ASB	5A	032689	RUTHENIUM 103	LT	4.0000	PCL	TE
ASB	5A	032689	RUTHENIUM 106		0.0000	PCML	SR
ASB	5A	032689	RUTHENIUM 106	LT	30.0000	PCL	TE
ASB	5A	032689	ANTIMONY 125		0.0000	PCML	SR
ASB	5A	032689	SELENIUM	LT	2.0000	UGL	EE
ASB	5A	032689	SILICA		4530.0000	UGL	EE
ASB	5A	032689	SULFATE	LT	5000.0000	UGL	EE
ASB	5A	032689	STRONTIUM 89	LT	4.0000	PCL	TE
ASB	5A	032689	STRONTIUM 90	LT	1.0000	PCL	TE
ASB	5A	032689	TETRACHLOROETHYLENE		2.0400	UGL	EE
ASB	5A	032689	TETRACHLOROETHYLENE		1.5400	UGL	MA
ASB	5A	032689	TOTAL DISSOLVED SOLIDS		28000.0000	UGL	EE
ASB	5A	032689	THORIUM 228	LT	7.0000	PCL	TE
ASB	5A	032689	TOTAL ORGANIC CARBON	LT	1000.0000	UGL	EE
ASB	5A	032689	TOTAL RADIUM		1.9700	PCL	RM
ASB	5A	032689	TOTAL ORGANIC HALOGENS	LT	5.0000	UGL	EE
ASB	5A	032689	TOTAL PHOSPHATES	LT	20.0000	UGL	EE
ASB	5A	032689	TRICHLOROETHYLENE		2.1700	UGL	EE
ASB	5A	032689	TRICHLOROETHYLENE		1.6500	UGL	MA
ASB	5A	032689	TRITIUM		1.2000	PCML	RM
ASB	5A	032689	TRANS-1,2-DICHLOROETHENE	LT	1.0000	UGL	MA
ASB	5A	032689	URANIUM 234	LT	2.0000	PCL	TE
ASB	5A	032689	URANIUM 235	LT	0.7000	PCL	TE
ASB	5A	032689	1,1-DICHLOROETHYLENE	LT	1.0000	UGL	MA
ASB	5A	032689	1,1,1-TRICHLOROETHANE	LT	1.0000	UGL	EE
ASB	5A	032689	1,1,1-TRICHLOROETHANE	LT	1.0000	UGL	MA
ASB	5A	032689	ZINC 65	LT	7.0000	PCL	TE
ASB	5A	032689	ZIRCONIUM/NIOBIUM 95		0.0000	PCML	SR
ASB	5A	032689	ZIRCONIUM 95	LT	4.0000	PCL	TE

This Page Intentionally Left Blank.

T-Test Data

This Page Intentionally Left Blank.

T-Test Data for ASB 5A

OBS	SERIES	WELL	DATE	TESTNAME	VALUE
1	ASB	BKG	12687	ALUMINUM	43.00
2	ASB	BKG	12987	ALUMINUM	35.33
3	ASB	BKG	20789	ALUMINUM	80.00
4	ASB	BKG	22488	ALUMINUM	59.00
5	ASB	BKG	31289	ALUMINUM	46.50
6	ASB	BKG	40687	ALUMINUM	42.50
7	ASB	BKG	51088	ALUMINUM	253.00
8	ASB	BKG	51188	ALUMINUM	314.00
9	ASB	BKG	61886	ALUMINUM	62.00
10	ASB	BKG	72286	ALUMINUM	37.50
11	ASB	BKG	72386	ALUMINUM	45.00
12	ASB	BKG	80487	ALUMINUM	61.00
13	ASB	BKG	81388	ALUMINUM	42.00
14	ASB	BKG	81488	ALUMINUM	43.00
15	ASB	BKG	102888	ALUMINUM	51.00
16	ASB	BKG	110286	ALUMINUM	33.00
17	ASB	BKG	110386	ALUMINUM	37.67
18	ASB	BKG	110888	ALUMINUM	44.00
19	ASB	BKG	121787	ALUMINUM	74.00
20	ASB	BKG	121987	ALUMINUM	79.00
21	ASB	5A	20487	BARIUM	11.00
22	ASB	5A	22585	BARIUM	10.00
23	ASB	5A	32689	BARIUM	13.00
24	ASB	5A	70788	BARIUM	13.00
25	ASB	5A	81484	BARIUM	16.00
26	ASB	5A	102284	BARIUM	16.00
27	ASB	BKG	12687	BARIUM	7.50
28	ASB	BKG	12987	BARIUM	3.33
29	ASB	BKG	20789	BARIUM	5.00
30	ASB	BKG	22488	BARIUM	8.00
31	ASB	BKG	31289	BARIUM	8.50
32	ASB	BKG	51088	BARIUM	7.00
33	ASB	BKG	51188	BARIUM	2.00
34	ASB	BKG	61886	BARIUM	2.00
35	ASB	BKG	72286	BARIUM	4.00
36	ASB	BKG	72386	BARIUM	7.00
37	ASB	BKG	80487	BARIUM	6.50
38	ASB	BKG	81388	BARIUM	2.00
39	ASB	BKG	81488	BARIUM	6.00
40	ASB	BKG	102888	BARIUM	4.00
41	ASB	BKG	110286	BARIUM	2.00
42	ASB	BKG	110386	BARIUM	7.00
43	ASB	BKG	110888	BARIUM	9.00
44	ASB	BKG	121787	BARIUM	14.00
45	ASB	BKG	121987	BARIUM	5.00
46	ASB	BKG	12687	CALCIUM	265.00
47	ASB	BKG	12987	CALCIUM	876.33
48	ASB	BKG	110286	CALCIUM	983.50
49	ASB	BKG	110386	CALCIUM	655.00
50	ASB	5A	20487	CHLORIDE	5850.00
51	ASB	5A	21286	CHLORIDE	8100.00
52	ASB	5A	22585	CHLORIDE	11660.00
53	ASB	5A	22688	CHLORIDE	5800.00
54	ASB	5A	32689	CHLORIDE	5200.00

T-Test Data for ASB 5A

SAS 14:00 Saturday, August 5, 1989 85

OBS	SERIES	WELL	DATE	TESTNAME	VALUE
55	ASB	5A	70788	CHLORIDE	4700.00
56	ASB	5A	81484	CHLORIDE	9140.00
57	ASB	5A	102284	CHLORIDE	9100.00
58	ASB	BKG	12687	CHLORIDE	2500.00
59	ASB	BKG	12987	CHLORIDE	2900.00
60	ASB	BKG	20789	CHLORIDE	2200.00
61	ASB	BKG	22488	CHLORIDE	2150.00
62	ASB	BKG	31289	CHLORIDE	2500.00
63	ASB	BKG	51088	CHLORIDE	2450.00
64	ASB	BKG	51188	CHLORIDE	2000.00
65	ASB	BKG	61886	CHLORIDE	4166.67
66	ASB	BKG	72286	CHLORIDE	2270.00
67	ASB	BKG	72386	CHLORIDE	2270.00
68	ASB	BKG	80487	CHLORIDE	2950.00
69	ASB	BKG	81388	CHLORIDE	2400.00
70	ASB	BKG	81488	CHLORIDE	2300.00
71	ASB	BKG	102888	CHLORIDE	2100.00
72	ASB	BKG	110286	CHLORIDE	3400.00
73	ASB	BKG	110386	CHLORIDE	2800.00
74	ASB	BKG	110888	CHLORIDE	2200.00
75	ASB	BKG	121987	CHLORIDE	2400.00
76	ASB	5A	20487	COPPER	11.00
77	ASB	5A	22688	COPPER	2.00
78	ASB	5A	32689	COPPER	5.00
79	ASB	5A	81484	COPPER	2.00
80	ASB	5A	102284	COPPER	6.00
81	ASB	BKG	12687	COPPER	4.50
82	ASB	BKG	12987	COPPER	2.00
83	ASB	BKG	20789	COPPER	11.00
84	ASB	BKG	22488	COPPER	7.50
85	ASB	BKG	31289	COPPER	5.50
86	ASB	BKG	51088	COPPER	6.00
87	ASB	BKG	51188	COPPER	5.00
88	ASB	BKG	61886	COPPER	5.50
89	ASB	BKG	72286	COPPER	6.00
90	ASB	BKG	72386	COPPER	3.00
91	ASB	BKG	80487	COPPER	8.50
92	ASB	BKG	81388	COPPER	2.00
93	ASB	BKG	81488	COPPER	4.00
94	ASB	BKG	102888	COPPER	5.00
95	ASB	BKG	110286	COPPER	9.50
96	ASB	BKG	110386	COPPER	9.00
97	ASB	BKG	110888	COPPER	15.00
98	ASB	BKG	121787	COPPER	15.00
99	ASB	BKG	121987	COPPER	5.00
100	ASB	5A	20487	GROSS ALPHA	2.67
101	ASB	5A	21286	GROSS ALPHA	7.00
102	ASB	5A	22585	GROSS ALPHA	5.00
103	ASB	5A	22688	GROSS ALPHA	5.00
104	ASB	5A	32689	GROSS ALPHA	4.00
105	ASB	5A	70788	GROSS ALPHA	5.00
106	ASB	5A	80287	GROSS ALPHA	2.00
107	ASB	5A	80686	GROSS ALPHA	1.50
108	ASB	5A	81484	GROSS ALPHA	5.00

T-Test Data for ASB 5A

SAS 14:00 Saturday, August 5, 1989 86

OBS	SERIES	WELL	DATE	TESTNAME	VALUE
109	ASB	5A	102284	GROSS ALPHA	1.000
110	ASB	BKG	12687	GROSS ALPHA	7.000
111	ASB	BKG	12987	GROSS ALPHA	1.000
112	ASB	BKG	20789	GROSS ALPHA	1.500
113	ASB	BKG	22488	GROSS ALPHA	14.500
114	ASB	BKG	31289	GROSS ALPHA	23.750
115	ASB	BKG	40687	GROSS ALPHA	5.250
116	ASB	BKG	61886	GROSS ALPHA	5.750
117	ASB	BKG	72286	GROSS ALPHA	1.500
118	ASB	BKG	72386	GROSS ALPHA	7.000
119	ASB	BKG	80487	GROSS ALPHA	3.750
120	ASB	BKG	110286	GROSS ALPHA	1.500
121	ASB	BKG	110386	GROSS ALPHA	7.500
122	ASB	BKG	121787	GROSS ALPHA	22.000
123	ASB	BKG	121987	GROSS ALPHA	1.000
124	ASB	5A	20487	IRON	28.000
125	ASB	5A	21286	IRON	39.000
126	ASB	5A	22585	IRON	2.000
127	ASB	5A	22688	IRON	20.000
128	ASB	5A	32689	IRON	101.000
129	ASB	5A	70788	IRON	152.000
130	ASB	5A	80287	IRON	74.000
131	ASB	5A	81484	IRON	36.500
132	ASB	5A	102284	IRON	54.000
133	ASB	BKG	12687	IRON	19.500
134	ASB	BKG	12987	IRON	31.500
135	ASB	BKG	61886	IRON	39.000
136	ASB	BKG	72286	IRON	31.500
137	ASB	BKG	72386	IRON	31.333
138	ASB	BKG	80487	IRON	76.500
139	ASB	BKG	110286	IRON	33.500
140	ASB	BKG	110386	IRON	27.667
141	ASB	BKG	121787	IRON	33.000
142	ASB	BKG	121987	IRON	40.000
143	ASB	5A	20487	LEAD	5.000
144	ASB	5A	22585	LEAD	2.000
145	ASB	5A	22688	LEAD	3.000
146	ASB	5A	32689	LEAD	3.000
147	ASB	5A	41886	LEAD	8.000
148	ASB	5A	42385	LEAD	8.000
149	ASB	5A	70788	LEAD	3.000
150	ASB	5A	80287	LEAD	10.000
151	ASB	5A	80686	LEAD	3.000
152	ASB	5A	81484	LEAD	13.500
153	ASB	5A	82685	LEAD	5.000
154	ASB	5A	102284	LEAD	9.000
155	ASB	5A	102985	LEAD	5.000
156	ASB	BKG	12687	LEAD	11.500
157	ASB	BKG	12987	LEAD	8.667
158	ASB	BKG	20789	LEAD	20.000
159	ASB	BKG	22488	LEAD	8.500
160	ASB	BKG	31289	LEAD	3.000
161	ASB	BKG	40687	LEAD	11.000
162	ASB	BKG	51088	LEAD	11.000

T-Test Data for ASB 5A

OBS	SERIES	WELL	DATE	TESTNAME	VALUE
163	ASB	BKG	51188	LEAD	9.00
164	ASB	BKG	61886	LEAD	24.50
165	ASB	BKG	72286	LEAD	22.50
166	ASB	BKG	72386	LEAD	28.33
167	ASB	BKG	80487	LEAD	9.50
168	ASB	BKG	81388	LEAD	3.00
169	ASB	BKG	81488	LEAD	3.00
170	ASB	BKG	102888	LEAD	9.50
171	ASB	BKG	110286	LEAD	17.00
172	ASB	BKG	110386	LEAD	17.67
173	ASB	BKG	110888	LEAD	15.00
174	ASB	BKG	121787	LEAD	8.00
175	ASB	BKG	121987	LEAD	9.00
176	ASB	BKG	12687	MAGNESIUM	435.00
177	ASB	BKG	12987	MAGNESIUM	481.00
178	ASB	BKG	110286	MAGNESIUM	485.00
179	ASB	BKG	110386	MAGNESIUM	443.33
180	ASB	5A	20487	MANGANESE	12.00
181	ASB	5A	21286	MANGANESE	11.00
182	ASB	5A	22585	MANGANESE	4.00
183	ASB	5A	22688	MANGANESE	14.00
184	ASB	5A	32689	MANGANESE	11.00
185	ASB	5A	70788	MANGANESE	28.00
186	ASB	5A	80287	MANGANESE	19.00
187	ASB	5A	80686	MANGANESE	11.00
188	ASB	5A	81484	MANGANESE	29.50
189	ASB	5A	102284	MANGANESE	24.00
190	ASB	BKG	12687	MANGANESE	3.50
191	ASB	BKG	12987	MANGANESE	19.33
192	ASB	BKG	20789	MANGANESE	17.00
193	ASB	BKG	31289	MANGANESE	3.50
194	ASB	BKG	61886	MANGANESE	14.00
195	ASB	BKG	72286	MANGANESE	24.50
196	ASB	BKG	72386	MANGANESE	5.00
197	ASB	BKG	80487	MANGANESE	11.00
198	ASB	BKG	81388	MANGANESE	13.00
199	ASB	BKG	81488	MANGANESE	3.00
200	ASB	BKG	110286	MANGANESE	21.00
201	ASB	BKG	110386	MANGANESE	5.00
202	ASB	BKG	121787	MANGANESE	14.00
203	ASB	BKG	121987	MANGANESE	15.00
204	ASB	5A	20487	NITRATE AS NITROGEN	330.00
205	ASB	5A	22585	NITRATE AS NITROGEN	1150.00
206	ASB	5A	32689	NITRATE AS NITROGEN	211.00
207	ASB	5A	70788	NITRATE AS NITROGEN	310.00
208	ASB	5A	81484	NITRATE AS NITROGEN	250.00
209	ASB	5A	102284	NITRATE AS NITROGEN	250.00
210	ASB	BKG	12687	NITRATE AS NITROGEN	2180.00
211	ASB	BKG	12987	NITRATE AS NITROGEN	1200.00
212	ASB	BKG	20789	NITRATE AS NITROGEN	998.00
213	ASB	BKG	22488	NITRATE AS NITROGEN	1525.00
214	ASB	BKG	31289	NITRATE AS NITROGEN	1990.00
215	ASB	BKG	40687	NITRATE AS NITROGEN	1670.00
216	ASB	BKG	51088	NITRATE AS NITROGEN	1560.00

T-Test Data for ASB 5A

OBS	SERIES	WELL	DATE	TESTNAME	VALUE
217	ASB	BKG	51188	NITRATE AS NITROGEN	880.00
218	ASB	BKG	61886	NITRATE AS NITROGEN	1783.33
219	ASB	BKG	72286	NITRATE AS NITROGEN	1190.00
220	ASB	BKG	72386	NITRATE AS NITROGEN	2070.00
221	ASB	BKG	80487	NITRATE AS NITROGEN	1675.00
222	ASB	BKG	81388	NITRATE AS NITROGEN	1080.00
223	ASB	BKG	81488	NITRATE AS NITROGEN	1980.00
224	ASB	BKG	102888	NITRATE AS NITROGEN	1210.00
225	ASB	BKG	110286	NITRATE AS NITROGEN	1170.00
226	ASB	BKG	110386	NITRATE AS NITROGEN	2140.00
227	ASB	BKG	110888	NITRATE AS NITROGEN	2240.00
228	ASB	BKG	121787	NITRATE AS NITROGEN	3040.00
229	ASB	BKG	121987	NITRATE AS NITROGEN	1370.00
230	ASB	5A	20487	NONVOLATILE BETA	6.67
231	ASB	5A	21286	NONVOLATILE BETA	5.00
232	ASB	5A	22585	NONVOLATILE BETA	3.00
233	ASB	5A	22688	NONVOLATILE BETA	3.00
234	ASB	5A	32689	NONVOLATILE BETA	2.00
235	ASB	5A	70788	NONVOLATILE BETA	2.00
236	ASB	5A	81484	NONVOLATILE BETA	1.00
237	ASB	5A	102284	NONVOLATILE BETA	1.50
238	ASB	BKG	12687	NONVOLATILE BETA	5.00
239	ASB	BKG	12987	NONVOLATILE BETA	2.00
240	ASB	BKG	20789	NONVOLATILE BETA	1.00
241	ASB	BKG	22488	NONVOLATILE BETA	8.67
242	ASB	BKG	31289	NONVOLATILE BETA	14.25
243	ASB	BKG	40687	NONVOLATILE BETA	4.50
244	ASB	BKG	61886	NONVOLATILE BETA	4.00
245	ASB	BKG	72286	NONVOLATILE BETA	1.00
246	ASB	BKG	72386	NONVOLATILE BETA	4.00
247	ASB	BKG	80487	NONVOLATILE BETA	3.00
248	ASB	BKG	110286	NONVOLATILE BETA	1.00
249	ASB	BKG	110386	NONVOLATILE BETA	5.50
250	ASB	BKG	121787	NONVOLATILE BETA	14.00
251	ASB	BKG	121987	NONVOLATILE BETA	3.00
252	ASB	5A	20487	PH	5.00
253	ASB	5A	21286	PH	4.00
254	ASB	5A	22585	PH	4.00
255	ASB	5A	22688	PH	5.00
256	ASB	5A	32384	PH	6.00
257	ASB	5A	32689	PH	5.00
258	ASB	5A	40588	PH	6.00
259	ASB	5A	41284	PH	6.00
260	ASB	5A	41886	PH	5.00
261	ASB	5A	42385	PH	5.00
262	ASB	5A	42587	PH	5.00
263	ASB	5A	70788	PH	5.00
264	ASB	5A	80287	PH	6.00
265	ASB	5A	80686	PH	4.00
266	ASB	5A	81484	PH	5.00
267	ASB	5A	82685	PH	4.00
268	ASB	5A	100288	PH	5.00
269	ASB	5A	101186	PH	5.00
270	ASB	5A	102284	PH	5.00

T-Test Data for ASB 5A

SAS 14:00 Saturday, August 5, 1989 89

OBS	SERIES	WELL	DATE	TESTNAME	VALUE
271	ASB	5A	102287	PH	5.0
272	ASB	5A	102985	PH	4.0
273	ASB	BKG	12687	PH	5.0
274	ASB	BKG	12987	PH	4.0
275	ASB	BKG	20789	PH	5.0
276	ASB	BKG	22488	PH	5.0
277	ASB	BKG	31289	PH	4.0
278	ASB	BKG	40687	PH	4.5
279	ASB	BKG	51088	PH	4.0
280	ASB	BKG	51188	PH	5.0
281	ASB	BKG	61886	PH	5.0
282	ASB	BKG	72286	PH	5.0
283	ASB	BKG	72386	PH	5.0
284	ASB	BKG	80487	PH	5.0
285	ASB	BKG	81388	PH	5.0
286	ASB	BKG	81488	PH	4.0
287	ASB	BKG	90687	PH	5.0
288	ASB	BKG	90887	PH	5.0
289	ASB	BKG	102888	PH	5.0
290	ASB	BKG	110286	PH	4.0
291	ASB	BKG	110386	PH	4.0
292	ASB	BKG	110888	PH	5.0
293	ASB	BKG	121787	PH	4.0
294	ASB	BKG	121987	PH	5.0
295	ASB	5A	20487	SODIUM	4975.0
296	ASB	5A	21286	SODIUM	5400.0
297	ASB	5A	22585	SODIUM	7410.0
298	ASB	5A	22688	SODIUM	3190.0
299	ASB	5A	32689	SODIUM	2510.0
300	ASB	5A	42385	SODIUM	6720.0
301	ASB	5A	70788	SODIUM	2760.0
302	ASB	5A	80287	SODIUM	2600.0
303	ASB	5A	81484	SODIUM	4055.0
304	ASB	5A	82685	SODIUM	7380.0
305	ASB	5A	101186	SODIUM	4620.0
306	ASB	5A	102284	SODIUM	5320.0
307	ASB	5A	102985	SODIUM	6210.0
308	ASB	BKG	12687	SODIUM	4475.0
309	ASB	BKG	12987	SODIUM	1990.0
310	ASB	BKG	20789	SODIUM	1740.0
311	ASB	BKG	22488	SODIUM	2610.0
312	ASB	BKG	31289	SODIUM	2530.0
313	ASB	BKG	40687	SODIUM	2840.0
314	ASB	BKG	51088	SODIUM	3700.0
315	ASB	BKG	51188	SODIUM	1680.0
316	ASB	BKG	61886	SODIUM	2620.0
317	ASB	BKG	72286	SODIUM	1935.0
318	ASB	BKG	72386	SODIUM	4330.0
319	ASB	BKG	80487	SODIUM	2620.0
320	ASB	BKG	81388	SODIUM	1630.0
321	ASB	BKG	81488	SODIUM	3360.0
322	ASB	BKG	102888	SODIUM	1730.0
323	ASB	BKG	110286	SODIUM	1725.0
324	ASB	BKG	110386	SODIUM	3880.0

T-Test Data for ASB 5A

OBS	SERIES	WELL	DATE	TESTNAME	VALUE
325	ASB	BKG	110888	SODIUM	3280.0
326	ASB	BKG	121787	SODIUM	3460.0
327	ASB	BKG	121987	SODIUM	1660.0
328	ASB	5A	20487	SPECIFIC CONDUCTANCE	38.0
329	ASB	5A	21286	SPECIFIC CONDUCTANCE	45.0
330	ASB	5A	22585	SPECIFIC CONDUCTANCE	87.0
331	ASB	5A	22688	SPECIFIC CONDUCTANCE	45.0
332	ASB	5A	32384	SPECIFIC CONDUCTANCE	54.0
333	ASB	5A	32689	SPECIFIC CONDUCTANCE	39.0
334	ASB	5A	40588	SPECIFIC CONDUCTANCE	47.0
335	ASB	5A	41284	SPECIFIC CONDUCTANCE	44.0
336	ASB	5A	41886	SPECIFIC CONDUCTANCE	47.0
337	ASB	5A	42385	SPECIFIC CONDUCTANCE	61.0
338	ASB	5A	42587	SPECIFIC CONDUCTANCE	39.0
339	ASB	5A	70788	SPECIFIC CONDUCTANCE	38.0
340	ASB	5A	80287	SPECIFIC CONDUCTANCE	38.0
341	ASB	5A	80686	SPECIFIC CONDUCTANCE	54.0
342	ASB	5A	81484	SPECIFIC CONDUCTANCE	62.0
343	ASB	5A	82685	SPECIFIC CONDUCTANCE	52.0
344	ASB	5A	100288	SPECIFIC CONDUCTANCE	41.0
345	ASB	5A	101186	SPECIFIC CONDUCTANCE	53.0
346	ASB	5A	102284	SPECIFIC CONDUCTANCE	87.0
347	ASB	5A	102287	SPECIFIC CONDUCTANCE	46.0
348	ASB	5A	102985	SPECIFIC CONDUCTANCE	38.0
349	ASB	BKG	12687	SPECIFIC CONDUCTANCE	19.0
350	ASB	BKG	12987	SPECIFIC CONDUCTANCE	28.0
351	ASB	BKG	20789	SPECIFIC CONDUCTANCE	28.0
352	ASB	BKG	22488	SPECIFIC CONDUCTANCE	31.5
353	ASB	BKG	31289	SPECIFIC CONDUCTANCE	35.0
354	ASB	BKG	40687	SPECIFIC CONDUCTANCE	30.0
355	ASB	BKG	51088	SPECIFIC CONDUCTANCE	38.0
356	ASB	BKG	51188	SPECIFIC CONDUCTANCE	24.0
357	ASB	BKG	61886	SPECIFIC CONDUCTANCE	26.0
358	ASB	BKG	72286	SPECIFIC CONDUCTANCE	26.0
359	ASB	BKG	72386	SPECIFIC CONDUCTANCE	40.0
360	ASB	BKG	80487	SPECIFIC CONDUCTANCE	31.0
361	ASB	BKG	81388	SPECIFIC CONDUCTANCE	25.0
362	ASB	BKG	81488	SPECIFIC CONDUCTANCE	36.0
363	ASB	BKG	90687	SPECIFIC CONDUCTANCE	29.0
364	ASB	BKG	90887	SPECIFIC CONDUCTANCE	38.0
365	ASB	BKG	102888	SPECIFIC CONDUCTANCE	25.0
366	ASB	BKG	110286	SPECIFIC CONDUCTANCE	32.0
367	ASB	BKG	110386	SPECIFIC CONDUCTANCE	43.0
368	ASB	BKG	110888	SPECIFIC CONDUCTANCE	35.0
369	ASB	BKG	121787	SPECIFIC CONDUCTANCE	28.0
370	ASB	BKG	121987	SPECIFIC CONDUCTANCE	20.0
371	ASB	5A	20487	TETRACHLOROETHYLENE	4.0
372	ASB	5A	22688	TETRACHLOROETHYLENE	3.0
373	ASB	5A	32689	TETRACHLOROETHYLENE	2.0
374	ASB	5A	42587	TETRACHLOROETHYLENE	1.0
375	ASB	5A	70788	TETRACHLOROETHYLENE	2.0
376	ASB	5A	80287	TETRACHLOROETHYLENE	2.0
377	ASB	5A	101186	TETRACHLOROETHYLENE	2.5
378	ASB	5A	102287	TETRACHLOROETHYLENE	2.0

T-Test Data for ASB 5A

OBS	SERIES	WELL	DATE	TESTNAME	VALUE
379	ASB	5A	20487	TOTAL DISSOLVED SOLIDS	18000.00
380	ASB	5A	32689	TOTAL DISSOLVED SOLIDS	28000.00
381	ASB	5A	81484	TOTAL DISSOLVED SOLIDS	57000.00
382	ASB	5A	102284	TOTAL DISSOLVED SOLIDS	30000.00
383	ASB	BKG	12687	TOTAL DISSOLVED SOLIDS	22000.00
384	ASB	BKG	12987	TOTAL DISSOLVED SOLIDS	32000.00
385	ASB	BKG	20789	TOTAL DISSOLVED SOLIDS	2500.00
386	ASB	BKG	22488	TOTAL DISSOLVED SOLIDS	24000.00
387	ASB	BKG	31289	TOTAL DISSOLVED SOLIDS	23000.00
388	ASB	BKG	40687	TOTAL DISSOLVED SOLIDS	28400.00
389	ASB	BKG	51088	TOTAL DISSOLVED SOLIDS	40000.00
390	ASB	BKG	51188	TOTAL DISSOLVED SOLIDS	26000.00
391	ASB	BKG	80487	TOTAL DISSOLVED SOLIDS	64000.00
392	ASB	BKG	81388	TOTAL DISSOLVED SOLIDS	28000.00
393	ASB	BKG	81488	TOTAL DISSOLVED SOLIDS	31000.00
394	ASB	BKG	102888	TOTAL DISSOLVED SOLIDS	112000.00
395	ASB	BKG	110888	TOTAL DISSOLVED SOLIDS	59000.00
396	ASB	BKG	121787	TOTAL DISSOLVED SOLIDS	9000.00
397	ASB	BKG	121987	TOTAL DISSOLVED SOLIDS	52000.00
398	ASB	5A	20487	TOTAL ORGANIC HALOGENS	58.00
399	ASB	5A	21286	TOTAL ORGANIC HALOGENS	60.00
400	ASB	5A	22585	TOTAL ORGANIC HALOGENS	303.50
401	ASB	5A	22688	TOTAL ORGANIC HALOGENS	6.00
402	ASB	5A	32689	TOTAL ORGANIC HALOGENS	2.50
403	ASB	5A	42385	TOTAL ORGANIC HALOGENS	295.00
404	ASB	5A	70788	TOTAL ORGANIC HALOGENS	2.50
405	ASB	5A	80287	TOTAL ORGANIC HALOGENS	19.00
406	ASB	5A	80686	TOTAL ORGANIC HALOGENS	110.00
407	ASB	5A	82685	TOTAL ORGANIC HALOGENS	128.00
408	ASB	5A	101186	TOTAL ORGANIC HALOGENS	124.00
409	ASB	5A	102985	TOTAL ORGANIC HALOGENS	47.00
410	ASB	BKG	12687	TOTAL PHOSPHATES	30.00
411	ASB	BKG	12987	TOTAL PHOSPHATES	40.00
412	ASB	BKG	20789	TOTAL PHOSPHATES	10.00
413	ASB	BKG	31289	TOTAL PHOSPHATES	13.67
414	ASB	BKG	40687	TOTAL PHOSPHATES	10.00
415	ASB	BKG	51088	TOTAL PHOSPHATES	30.00
416	ASB	BKG	51188	TOTAL PHOSPHATES	40.00
417	ASB	BKG	61886	TOTAL PHOSPHATES	9.50
418	ASB	BKG	72286	TOTAL PHOSPHATES	39.00
419	ASB	BKG	72386	TOTAL PHOSPHATES	42.00
420	ASB	BKG	80487	TOTAL PHOSPHATES	15.00
421	ASB	BKG	81388	TOTAL PHOSPHATES	10.00
422	ASB	BKG	81488	TOTAL PHOSPHATES	10.00
423	ASB	BKG	102888	TOTAL PHOSPHATES	10.00
424	ASB	BKG	110286	TOTAL PHOSPHATES	39.50
425	ASB	BKG	110386	TOTAL PHOSPHATES	37.00
426	ASB	BKG	110888	TOTAL PHOSPHATES	60.00
427	ASB	BKG	121787	TOTAL PHOSPHATES	70.00
428	ASB	BKG	121987	TOTAL PHOSPHATES	100.00
429	ASB	5A	20487	TOTAL RADIUM	2.33
430	ASB	5A	21286	TOTAL RADIUM	4.00
431	ASB	5A	22585	TOTAL RADIUM	2.00
432	ASB	5A	22688	TOTAL RADIUM	2.00

T-Test Data for ASB 5A

OBS	SERIES	WELL	DATE	TESTNAME	VALUE
433	ASB	5A	32689	TOTAL RADIUM	2.000
434	ASB	5A	70788	TOTAL RADIUM	2.000
435	ASB	5A	80287	TOTAL RADIUM	3.000
436	ASB	5A	80686	TOTAL RADIUM	3.000
437	ASB	5A	81484	TOTAL RADIUM	4.000
438	ASB	5A	102284	TOTAL RADIUM	2.000
439	ASB	BKG	12687	TOTAL RADIUM	7.000
440	ASB	BKG	12987	TOTAL RADIUM	0.500
441	ASB	BKG	20789	TOTAL RADIUM	1.000
442	ASB	BKG	22488	TOTAL RADIUM	4.833
443	ASB	BKG	31289	TOTAL RADIUM	12.000
444	ASB	BKG	40687	TOTAL RADIUM	4.250
445	ASB	BKG	51088	TOTAL RADIUM	6.000
446	ASB	BKG	51188	TOTAL RADIUM	0.500
447	ASB	BKG	61886	TOTAL RADIUM	4.500
448	ASB	BKG	72286	TOTAL RADIUM	1.000
449	ASB	BKG	72386	TOTAL RADIUM	9.000
450	ASB	BKG	80487	TOTAL RADIUM	3.500
451	ASB	BKG	81388	TOTAL RADIUM	1.000
452	ASB	BKG	81488	TOTAL RADIUM	7.000
453	ASB	BKG	102888	TOTAL RADIUM	0.500
454	ASB	BKG	110286	TOTAL RADIUM	0.500
455	ASB	BKG	110386	TOTAL RADIUM	7.500
456	ASB	BKG	110888	TOTAL RADIUM	6.000
457	ASB	BKG	121787	TOTAL RADIUM	6.000
458	ASB	BKG	121987	TOTAL RADIUM	0.000
459	ASB	5A	20487	TRICHLOROETHYLENE	82.500
460	ASB	5A	22688	TRICHLOROETHYLENE	11.000
461	ASB	5A	32689	TRICHLOROETHYLENE	2.000
462	ASB	5A	42587	TRICHLOROETHYLENE	23.000
463	ASB	5A	70788	TRICHLOROETHYLENE	3.000
464	ASB	5A	80287	TRICHLOROETHYLENE	28.000
465	ASB	5A	101186	TRICHLOROETHYLENE	185.000
466	ASB	5A	102287	TRICHLOROETHYLENE	15.000
467	ASB	BKG	40687	TURBIDITY	0.000
468	ASB	BKG	61886	TURBIDITY	0.667
469	ASB	BKG	80487	TURBIDITY	0.500
470	ASB	BKG	121787	TURBIDITY	0.000
471	ASB	BKG	121987	TURBIDITY	0.000
472	ASB	5A	20487	ZINC	15.000
473	ASB	5A	41886	ZINC	5.000
474	ASB	5A	81484	ZINC	44.500
475	ASB	5A	102284	ZINC	268.000
476	ASB	BKG	12687	ZINC	7.000
477	ASB	BKG	12987	ZINC	8.667
478	ASB	BKG	20789	ZINC	17.000
479	ASB	BKG	31289	ZINC	11.000
480	ASB	BKG	51088	ZINC	6.000
481	ASB	BKG	51188	ZINC	11.000
482	ASB	BKG	61886	ZINC	9.750
483	ASB	BKG	72286	ZINC	15.500
484	ASB	BKG	72386	ZINC	2.000
485	ASB	BKG	80487	ZINC	46.500
486	ASB	BKG	81388	ZINC	49.000

T-Test Data for ASB 5A

OBS	SERIES	WELL	DATE	TESTNAME	VALUE
487	ASB	BKG	81488	ZINC	24.0000
488	ASB	BKG	102888	ZINC	44.0000
489	ASB	BKG	110286	ZINC	8.0000
490	ASB	BKG	110386	ZINC	11.3333
491	ASB	BKG	110888	ZINC	12.0000
492	ASB	BKG	121787	ZINC	54.0000
493	ASB	BKG	121987	ZINC	17.0000

Statistical Comparison Results

This Page Intentionally Left Blank.

TTEST PROCEDURE

********** TESTNAME=BARIUM **********

Variable: VALUE

WELL	N	Mean	Std Dev	Std Error	Minimum	Maximum
5A	6	13.16666667	2.48327740	1.01379376	10.00000000	16.00000000
BKG	19	5.78070175	3.06365222	0.70285002	2.00000000	14.00000000

Variances	T	Method	DF	Prob>|T|
Unequal	5.9873	Satterthwaite	10.3	0.0001
		Cochran	.	0.0009
Equal	5.3515		23.0	0.0000

For H0: Variances are equal, F' = 1.52 DF = (18,5) Prob>F' = 0.6794

********** TESTNAME=CHLORIDE **********

Variable: VALUE

WELL	N	Mean	Std Dev	Std Error	Minimum	Maximum
5A	8	7443.750000	2438.746385	862.2270531	4700.000000	11660.00000
BKG	18	2553.148148	535.242260	126.1578107	2000.000000	4166.66667

Variances	T	Method	DF	Prob>|T|
Unequal	5.6123	Satterthwaite	7.3	0.0007
		Cochran	.	0.0008
Equal	8.2684		24.0	0.0000

For H0: Variances are equal, F' = 20.76 DF = (7,17) Prob>F' = 0.0000

********** TESTNAME=COPPER **********

Variable: VALUE

WELL	N	Mean	Std Dev	Std Error	Minimum	Maximum
5A	5	5.20000000	3.70135110	1.65529454	2.00000000	11.00000000
BKG	19	6.78947368	3.76871548	0.86460263	2.00000000	15.00000000

Variances	T	Method	DF	Prob>|T|
Unequal	-0.8511	Satterthwaite	6.4	0.4257
		Cochran	.	0.4355
Equal	-0.8418		22.0	0.4089

For H0: Variances are equal, F' = 1.04 DF = (18,4) Prob>F' = 1.0000

********** TESTNAME=GROSS ALPHA **********

Variable: VALUE

WELL	N	Mean	Std Dev	Std Error	Minimum	Maximum
5A	10	3.81666667	1.93481744	0.61184300	1.00000000	7.00000000
BKG	14	7.35714286	7.53562965	2.01398174	1.00000000	23.75000000

Variances	T	Method	DF	Prob>|T|
Unequal	-1.6820	Satterthwaite	15.3	0.1128
		Cochran	.	0.1173
Equal	-1.4436		22.0	0.1629

For H0: Variances are equal, F' = 15.17 DF = (13,9) Prob>F' = 0.0003

********** TESTNAME=IRON **********

Variable: VALUE

WELL	N	Mean	Std Dev	Std Error	Minimum	Maximum
5A	9	56.27777778	46.41330030	15.47110010	2.00000000	152.0000000
BKG	10	36.35000000	15.21420105	4.81115281	19.50000000	76.5000000

Variances	T	Method	DF	Prob>|T|
Unequal	1.2300	Satterthwaite	9.5	0.2482
		Cochran	.	0.2533
Equal	1.2866		17.0	0.2155

For H0: Variances are equal, F' = 9.31 DF = (8,9) Prob>F' = 0.0030

********** TESTNAME=LEAD **********

Variable: VALUE

WELL	N	Mean	Std Dev	Std Error	Minimum	Maximum
5A	13	5.96153846	3.46687623	0.96153846	2.00000000	13.50000000
BKG	20	12.48333333	7.15919643	1.60084499	3.00000000	28.33333333

Variances	T	Method	DF	Prob>|T|
Unequal	-3.4924	Satterthwaite	29.2	0.0015
		Cochran	.	0.0029
Equal	-3.0482		31.0	0.0047

For H0: Variances are equal, F' = 4.26 DF = (19,12) Prob>F' = 0.0134

********** TESTNAME=MANGANESE **********

Variable: VALUE

WELL	N	Mean	Std Dev	Std Error	Minimum	Maximum
5A	10	16.35000000	8.41311806	2.66046153	4.00000000	29.50000000
BKG	14	12.05952381	7.11703360	1.90210724	3.00000000	24.50000000

Variances	T	Method	DF	Prob>|T|
Unequal	1.3119	Satterthwaite	17.4	0.2066
		Cochran	.	0.2188
Equal	1.3504		22.0	0.1906

For H0: Variances are equal, F' = 1.40 DF = (9,13) Prob>F' = 0.5653

********** TESTNAME=NITRATE AS NITROGEN **********

Variable: VALUE

WELL	N	Mean	Std Dev	Std Error	Minimum	Maximum
5A	6	416.833333	361.8068085	147.7070110	211.0000000	1150.000000
BKG	20	1647.566667	538.2189613	120.3494184	880.0000000	3040.000000

Variances	T	Method	DF	Prob>|T|
Unequal	-6.4596	Satterthwaite	12.4	0.0001
		Cochran	.	0.0005
Equal	-5.2196		24.0	0.0000

For H0: Variances are equal, F' = 2.21 DF = (19,5) Prob>F' = 0.3866

********** TESTNAME=NONVOLATILE BETA **********

Variable: VALUE

WELL	N	Mean	Std Dev	Std Error	Minimum	Maximum
5A	8	3.02083333	1.91576066	0.67732368	1.00000000	6.66666667
BKG	14	5.06547619	4.36284068	1.16601822	1.00000000	14.25000000

Variances	T	Method	DF	Prob>|T|
Unequal	-1.5163	Satterthwaite	19.2	0.1458
		Cochran	.	0.1586
Equal	-1.2484		20.0	0.2263

For H0: Variances are equal, F' = 5.19 DF = (13,7) Prob>F' = 0.0366

********** TESTNAME=PH **********

Variable: VALUE

WELL	N	Mean	Std Dev	Std Error	Minimum	Maximum
5A	21	4.95238095	0.66904338	0.14599724	4.00000000	6.00000000
BKG	22	4.65909091	0.47274184	0.10078890	4.00000000	5.00000000

Variances	T	Method	DF	Prob>|T|
Unequal	1.6532	Satterthwaite	35.9	0.1070
		Cochran	.	0.1137
Equal	1.6664		41.0	0.1033

For H0: Variances are equal, F' = 2.00 DF = (20,21) Prob>F' = 0.1222

********** TESTNAME=SODIUM **********

Variable: VALUE

WELL	N	Mean	Std Dev	Std Error	Minimum	Maximum
5A	13	4857.692308	1760.349889	488.2332144	2510.000000	7410.000000
BKG	20	2689.750000	939.937673	210.1764531	1630.000000	4475.000000

Variances	T	Method	DF	Prob>|T|
Unequal	4.0785	Satterthwaite	16.5	0.0008
		Cochran	.	0.0014
Equal	4.6118		31.0	0.0001

For H0: Variances are equal, F' = 3.51 DF = (12,19) Prob>F' = 0.0145

********** TESTNAME=SPECIFIC CONDUCTANCE **********

Variable: VALUE

WELL	N	Mean	Std Dev	Std Error	Minimum	Maximum
5A	21	50.23809524	14.25799692	3.11135001	38.00000000	87.00000000
BKG	22	30.34090909	6.32340016	1.34815344	19.00000000	43.00000000

Variances	T	Method	DF	Prob>|T|
Unequal	5.8679	Satterthwaite	27.3	0.0001
		Cochran	.	0.0001
Equal	5.9625		41.0	0.0000

For H0: Variances are equal, F' = 5.08 DF = (20,21) Prob>F' = 0.0005

********** TESTNAME=TOTAL DISSOLVED SOLIDS **********

Variable: VALUE

WELL	N	Mean	Std Dev	Std Error	Minimum	Maximum
5A	4	33250.00000	16680.82732	8340.413659	18000.00000	57000.0000
BKG	15	36860.00000	26689.90713	6891.304390	2500.00000	112000.0000

Variances	T	Method	DF	Prob>|T|
Unequal	-0.3337	Satterthwaite	7.7	0.7475
		Cochran	.	0.7540
Equal	-0.2544		17.0	0.8022

For H0: Variances are equal, F' = 2.56 DF = (14,3) Prob>F' = 0.4768

********** TESTNAME=TOTAL RADIUM **********

Variable: VALUE

WELL	N	Mean	Std Dev	Std Error	Minimum	Maximum
5A	10	2.63333333	0.82327260	0.26034166	2.00000000	4.00000000
BKG	20	4.12916667	3.43490798	0.76806877	0.00000000	12.00000000

Variances	T	Method	DF	Prob>|T|
Unequal	-1.8444	Satterthwaite	23.0	0.0781
		Cochran	.	0.0827
Equal	-1.3468		28.0	0.1889

For H0: Variances are equal, F' = 17.41 DF = (19,9) Prob>F' = 0.0001

********** TESTNAME=ZINC **********

Variable: VALUE

WELL	N	Mean	Std Dev	Std Error	Minimum	Maximum
5A	4	83.12500000	124.3854058	62.19270288	5.00000000	268.0000000
BKG	18	19.65277778	16.6184658	3.91700996	2.00000000	54.0000000

Variances	T	Method	DF	Prob>|T|
Unequal	1.0186	Satterthwaite	3.0	0.3830
		Cochran	.	0.3832
Equal	2.2714		20.0	0.0343

For H0: Variances are equal, F' = 56.02 DF = (3,17) Prob>F' = 0.0000

Groundwater Monitoring Well

ASB 6A

This Page Intentionally Left Blank.

Raw Data

This Page Intentionally Left Blank.

Raw Data for ASB 6A

ASB	6A	020387	TOTAL DISSOLVED SOLIDS		12000.0000	UGL	EE
ASB	6A	020387	TOTAL DISSOLVED SOLIDS		10000.0000	UGL	EE
ASB	6A	020387	TOTAL ORGANIC CARBON	LT	1000.0000	UGL	EE
ASB	6A	020387	TOTAL RADIUM		4.3000	PCL	RM
ASB	6A	020387	TOTAL RADIUM		4.1000	PCL	RM
ASB	6A	020387	TOTAL ORGANIC HALOGENS		8.0000	UGL	EE
ASB	6A	020387	TOTAL PHOSPHATES		40.0000	UGL	EE
ASB	6A	020387	TOTAL PHOSPHATES		40.0000	UGL	EE
ASB	6A	020387	TRICHLOROETHYLENE	LT	1.0000	UGL	EE
ASB	6A	020387	TRITIUM		3.2400	PCML	RM
ASB	6A	020387	TRITIUM		3.0100	PCML	RM
ASB	6A	020387	1,1,1-TRICHLOROETHANE	LT	1.0000	UGL	EE
ASB	6A	020387	ZINC		12.0000	UGL	EE
ASB	6A	020387	ZINC		18.0000	UGL	EE
ASB	6A	042687	CARBON TETRACHLORIDE	LT	1.0000	UGL	EE
ASB	6A	042687	CHLOROFORM	LT	1.0000	UGL	EE
ASB	6A	042687	SPECIFIC CONDUCTANCE		44.0000	UMHC	FD
ASB	6A	042687	PH		4.7000	PH	FD
ASB	6A	042687	TETRACHLOROETHYLENE		2.4000	UGL	EE
ASB	6A	042687	TRICHLOROETHYLENE	LT	1.0000	UGL	EE
ASB	6A	042687	1,1,1-TRICHLOROETHANE	LT	1.0000	UGL	EE
ASB	6A	080287	GROSS ALPHA		3.1000	PCL	RM
ASB	6A	080287	GROSS ALPHA		3.6000	PCL	RM
ASB	6A	080287	CARBON TETRACHLORIDE	LT	1.0000	UGL	EE
ASB	6A	080287	CHLOROFORM	LT	1.0000	UGL	EE
ASB	6A	080287	SPECIFIC CONDUCTANCE		44.0000	UMHC	FD
ASB	6A	080287	CHROMIUM	LT	4.0000	UGL	EE
ASB	6A	080287	IRON		71.0000	UGL	EE
ASB	6A	080287	MANGANESE		46.0000	UGL	EE
ASB	6A	080287	SODIUM		3640.0000	UGL	EE
ASB	6A	080287	LEAD		14.0000	UGL	EE
ASB	6A	080287	PH		6.0000	PH	FD
ASB	6A	080287	TETRACHLOROETHYLENE		1.9600	UGL	EE
ASB	6A	080287	TOTAL ORGANIC CARBON		1000.0000	UGL	EE
ASB	6A	080287	TOTAL RADIUM		4.5000	PCL	RM
ASB	6A	080287	TOTAL RADIUM		4.3000	PCL	RM
ASB	6A	080287	TOTAL ORGANIC HALOGENS	LT	5.0000	UGL	EE
ASB	6A	080287	TRICHLOROETHYLENE	LT	1.0000	UGL	EE
ASB	6A	080287	1,1,1-TRICHLOROETHANE	LT	1.0000	UGL	EE
ASB	6A	101887	CARBON TETRACHLORIDE	LT	1.0000	UGL	EE
ASB	6A	101887	CHLOROFORM	LT	1.0000	UGL	EE
ASB	6A	101887	SPECIFIC CONDUCTANCE		53.0000	UMHC	FD
ASB	6A	101887	PH		4.6000	PH	FD
ASB	6A	101887	TETRACHLOROETHYLENE		2.3400	UGL	EE
ASB	6A	101887	TRICHLOROETHYLENE	LT	1.0000	UGL	EE
ASB	6A	101887	1,1,1-TRICHLOROETHANE	LT	1.0000	UGL	EE
ASB	6A	012788	GROSS ALPHA		19.0000	PCL	EE
ASB	6A	012788	NONVOLATILE BETA		11.0000	PCL	EE
ASB	6A	012788	CARBON TETRACHLORIDE	LT	1.0000	UGL	EE
ASB	6A	012788	CADMIUM	LT	2.0000	UGL	EE
ASB	6A	012788	CHLOROFORM	LT	1.0000	UGL	EE
ASB	6A	012788	CHLORIDE		7700.0000	UGL	EE
ASB	6A	012788	SPECIFIC CONDUCTANCE		47.0000	UMHC	FD
ASB	6A	012788	COPPER	LT	4.0000	UGL	EE
ASB	6A	012788	IRON		106.0000	UGL	EE
ASB	6A	012788	MERCURY	LT	0.2000	UGL	EE
ASB	6A	012788	MANGANESE		48.0000	UGL	EE
ASB	6A	012788	SODIUM		4670.0000	UGL	EE
ASB	6A	012788	NICKEL		6.0000	UGL	EE
ASB	6A	012788	LEAD		10.0000	UGL	EE
ASB	6A	012788	PH		4.8000	PH	FD
ASB	6A	012788	SULFATE	LT	5000.0000	UGL	EE
ASB	6A	012788	TETRACHLOROETHYLENE		1.7300	UGL	EE
ASB	6A	012788	TOTAL ORGANIC CARBON	LT	1000.0000	UGL	EE

Raw Data for ASB 6A

ASB	6A	012788	TOTAL RADIUM		4.1000	PCL	EE
ASB	6A	012788	TOTAL ORGANIC HALOGENS		5.0000	UGL	EE
ASB	6A	012788	TOTAL ORGANIC HALOGENS	LT	5.0000	UGL	EE
ASB	6A	012788	TRICHLOROETHYLENE	LT	1.0000	UGL	EE
ASB	6A	012788	1,1,1-TRICHLOROETHANE	LT	1.0000	UGL	EE
ASB	6A	040588	SPECIFIC CONDUCTANCE		54.0000	UMHC	FD
ASB	6A	040588	PH		5.1000	PH	FD
ASB	6A	070788	SILVER	LT	2.0000	UGL	EE
ASB	6A	070788	GROSS ALPHA		13.9000	PCL	EE
ASB	6A	070788	ARSENIC	LT	2.0000	UGL	EE
ASB	6A	070788	BARIUM		8.0000	UGL	EE
ASB	6A	070788	NONVOLATILE BETA		8.3200	PCL	EE
ASB	6A	070788	CALCIUM		1550.0000	UGL	EE
ASB	6A	070788	CARBON TETRACHLORIDE	LT	1.0000	UGL	EE
ASB	6A	070788	CADMIUM	LT	2.0000	UGL	EE
ASB	6A	070788	CERIUM 144		0.0000	PCML	SR
ASB	6A	070788	CHLOROFORM	LT	1.0000	UGL	EE
ASB	6A	070788	CHLOROFORM	LT	1.0000	UGL	MA
ASB	6A	070788	CHLORIDE		7600.0000	UGL	EE
ASB	6A	070788	SPECIFIC CONDUCTANCE		50.0000	UMHC	FD
ASB	6A	070788	COBALT 60		0.0000	PCML	SR
ASB	6A	070788	CHROMIUM	LT	4.0000	UGL	EE
ASB	6A	070788	CHROMIUM 51		0.0000	PCML	SR
ASB	6A	070788	CESIUM 134		0.0000	PCML	SR
ASB	6A	070788	CESIUM 137		0.0000	PCML	SR
ASB	6A	070788	FLUORIDE	LT	100.0000	UGL	EE
ASB	6A	070788	IRON		117.0000	UGL	EE
ASB	6A	070788	MERCURY	LT	0.2000	UGL	EE
ASB	6A	070788	IODINE 131		0.0000	PCML	SR
ASB	6A	070788	POTASSIUM	LT	500.0000	UGL	EE
ASB	6A	070788	MAGNESIUM		693.0000	UGL	EE
ASB	6A	070788	MANGANESE		32.0000	UGL	EE
ASB	6A	070788	SODIUM		4790.0000	UGL	EE
ASB	6A	070788	NITRATE AS NITROGEN		290.0000	UGL	EE
ASB	6A	070788	LEAD		8.0000	UGL	EE
ASB	6A	070788	LEAD 214		0.0900	PCML	SR
ASB	6A	070788	PH		4.8000	PH	FD
ASB	6A	070788	PHENOLS	LT	5.0000	UGL	EE
ASB	6A	070788	RUTHENIUM 103		0.0000	PCML	SR
ASB	6A	070788	RUTHENIUM 106		0.0000	PCML	SR
ASB	6A	070788	ANTIMONY 125		0.0000	PCML	SR
ASB	6A	070788	SELENIUM	LT	2.0000	UGL	EE
ASB	6A	070788	SILICA		1920.0000	UGL	EE
ASB	6A	070788	SULFATE	LT	5000.0000	UGL	EE
ASB	6A	070788	TETRACHLOROETHYLENE	LT	1.0000	UGL	EE
ASB	6A	070788	TETRACHLOROETHYLENE		1.9000	UGL	MA
ASB	6A	070788	TOTAL ORGANIC CARBON	LT	1000.0000	UGL	EE
ASB	6A	070788	TOTAL RADIUM		3.9500	PCL	EE
ASB	6A	070788	TOTAL ORGANIC HALOGENS	LT	5.0000	UGL	EE
ASB	6A	070788	TOTAL PHOSPHATES	LT	20.0000	UGL	EE
ASB	6A	070788	TRICHLOROETHYLENE	LT	1.0000	UGL	EE
ASB	6A	070788	TRICHLOROETHYLENE	LT	1.0000	UGL	MA
ASB	6A	070788	TRITIUM		1.1400	PCML	EE
ASB	6A	070788	TRANS-1,2-DICHLOROETHENE	LT	1.0000	UGL	MA
ASB	6A	070788	1,1-DICHLOROETHYLENE	LT	1.0000	UGL	MA
ASB	6A	070788	1,1,1-TRICHLOROETHANE	LT	1.0000	UGL	EE
ASB	6A	070788	1,1,1-TRICHLOROETHANE	LT	1.0000	UGL	MA
ASB	6A	070788	ZIRCONIUM/NIOBIUM 95		0.0000	PCML	SR
ASB	6A	100288	SPECIFIC CONDUCTANCE		54.0000	UMHC	FD
ASB	6A	100288	PH		4.7000	PH	FD
ASB	6A	032789	SILVER	LT	2.0000	UGL	EE
ASB	6A	032789	GROSS ALPHA		6.8200	PCL	RM
ASB	6A	032789	AMERICIUM 241		0.0820	PCL	TE
ASB	6A	032789	ARSENIC	LT	2.0000	UGL	EE

Raw Data for ASB 6A

ASB	6A	032789	BARIUM		9.0000	UGL	EE
ASB	6A	032789	BARIUM 140	LT	10.0000	PCL	TE
ASB	6A	032789	NONVOLATILE BETA		4.1300	PCL	RM
ASB	6A	032789	BERYLLIUM 7		0.0590	PCML	SR
ASB	6A	032789	BERYLLIUM 7	LT	40.0000	PCL	TE
ASB	6A	032789	CALCIUM		1210.0000	UGL	EE
ASB	6A	032789	CARBON TETRACHLORIDE	LT	1.0000	UGL	EE
ASB	6A	032789	CADMIUM	LT	2.0000	UGL	EE
ASB	6A	032789	CERIUM 141	LT	10.0000	PCL	TE
ASB	6A	032789	CERIUM 144		0.0000	PCML	SR
ASB	6A	032789	CERIUM 144	LT	40.0000	PCL	TE
ASB	6A	032789	CHLOROFORM	LT	1.0000	UGL	EE
ASB	6A	032789	CHLOROFORM	LT	1.0000	UGL	MA
ASB	6A	032789	CHLORIDE		7800.0000	UGL	EE
ASB	6A	032789	CURIUM 242	LT	0.0800	PCL	TE
ASB	6A	032789	CURIUM 243/244	LT	0.1000	PCL	TE
ASB	6A	032789	SPECIFIC CONDUCTANCE		55.0000	UMHC	FD
ASB	6A	032789	SPECIFIC CONDUCTANCE		53.2000	UMHC	EE
ASB	6A	032789	COBALT 58	LT	4.0000	PCL	TE
ASB	6A	032789	COBALT 60		0.0000	PCML	SR
ASB	6A	032789	COBALT 60	LT	5.0000	PCL	TE
ASB	6A	032789	CHROMIUM	LT	4.0000	UGL	EE
ASB	6A	032789	CHROMIUM 51		0.0000	PCML	SR
ASB	6A	032789	CESIUM 134		0.0000	PCML	SR
ASB	6A	032789	CESIUM 134	LT	5.0000	PCL	TE
ASB	6A	032789	CESIUM 137		0.0000	PCML	SR
ASB	6A	032789	CESIUM 137	LT	5.0000	PCL	TE
ASB	6A	032789	COPPER		4.0000	UGL	EE
ASB	6A	032789	FLUORIDE	LT	100.0000	UGL	EE
ASB	6A	032789	IRON		98.0000	UGL	EE
ASB	6A	032789	IRON 59	LT	9.0000	PCL	TE
ASB	6A	032789	MERCURY	LT	0.2000	UGL	EE
ASB	6A	032789	IODINE 131		0.0000	PCML	SR
ASB	6A	032789	IODINE 131	LT	20.0000	PCL	TE
ASB	6A	032789	POTASSIUM	LT	500.0000	UGL	EE
ASB	6A	032789	POTASSIUM 40	LT	100.0000	PCL	TE
ASB	6A	032789	MAGNESIUM		552.0000	UGL	EE
ASB	6A	032789	MANGANESE		27.0000	UGL	EE
ASB	6A	032789	MANGANESE 54	LT	4.0000	PCL	TE
ASB	6A	032789	SODIUM		6900.0000	UGL	EE
ASB	6A	032789	NICKEL	LT	4.0000	UGL	EE
ASB	6A	032789	NITRATE AS NITROGEN		452.0000	UGL	EE
ASB	6A	032789	LEAD		7.0000	UGL	EE
ASB	6A	032789	PH		4.7000	PH	FD
ASB	6A	032789	PH		4.8000	PH	EE
ASB	6A	032789	PHENOLS	LT	5.0000	UGL	EE
ASB	6A	032789	PLUTONIUM 238		0.6500	PCL	TE
ASB	6A	032789	PLUTONIUM 239/240		0.3100	PCL	TE
ASB	6A	032789	RADIUM 226	LT	100.0000	PCL	TE
ASB	6A	032789	RADIUM 226		3.5000	PCL	TE
ASB	6A	032789	RADIUM 228		3.4000	PCL	TE
ASB	6A	032789	RUTHENIUM 103		0.0000	PCML	SR
ASB	6A	032789	RUTHENIUM 103	LT	5.0000	PCL	TE
ASB	6A	032789	RUTHENIUM 106		0.0000	PCML	SR
ASB	6A	032789	RUTHENIUM 106	LT	40.0000	PCL	TE
ASB	6A	032789	ANTIMONY 125		0.0000	PCML	SR
ASB	6A	032789	SELENIUM	LT	2.0000	UGL	EE
ASB	6A	032789	SILICA		4890.0000	UGL	EE
ASB	6A	032789	SULFATE		5200.0000	UGL	EE
ASB	6A	032789	STRONTIUM 89	LT	4.0000	PCL	TE
ASB	6A	032789	STRONTIUM 90	LT	1.0000	PCL	TE
ASB	6A	032789	TETRACHLOROETHYLENE		4.6100	UGL	EE
ASB	6A	032789	TETRACHLOROETHYLENE		2.1600	UGL	MA
ASB	6A	032789	TOTAL DISSOLVED SOLIDS		32000.0000	UGL	EE

Raw Data for ASB 6A

ASB	6A	032789	THORIUM 228	LT	7.0000	PCL	TE
ASB	6A	032789	TOTAL ORGANIC CARBON		1800.0000	UGL	EE
ASB	6A	032789	TOTAL RADIUM		2.6300	PCL	RM
ASB	6A	032789	TOTAL ORGANIC HALOGENS	LT	5.0000	UGL	EE
ASB	6A	032789	TOTAL PHOSPHATES		28.0000	UGL	EE
ASB	6A	032789	TRICHLOROETHYLENE		1.1600	UGL	EE
ASB	6A	032789	TRICHLOROETHYLENE	LT	1.0000	UGL	MA
ASB	6A	032789	TRITIUM		1.5500	PCML	RM
ASB	6A	032789	TRANS-1,2-DICHLOROETHENE	LT	1.0000	UGL	MA
ASB	6A	032789	URANIUM 234		17.0000	PCL	TE
ASB	6A	032789	URANIUM 235		0.0090	PCML	SR
ASB	6A	032789	URANIUM 235	LT	0.4000	PCL	TE
ASB	6A	032789	1,1-DICHLOROETHYLENE	LT	1.0000	UGL	MA
ASB	6A	032789	1,1,1-TRICHLOROETHANE	LT	1.0000	UGL	EE
ASB	6A	032789	1,1,1-TRICHLOROETHANE	LT	1.0000	UGL	MA
ASB	6A	032789	ZINC 65	LT	9.0000	PCL	TE
ASB	6A	032789	ZIRCONIUM/NIOBIUM 95		0.0000	PCML	SR
ASB	6A	032789	ZIRCONIUM 95	LT	5.0000	PCL	TE

Raw Data for ASB 6A

ASB	6A	032384	SPECIFIC CONDUCTANCE		50.0000	UMHC	FD
ASB	6A	032384	PH		5.6000	PH	FD
ASB	6A	041284	SPECIFIC CONDUCTANCE		43.0000	UMHC	FD
ASB	6A	041284	PH		5.6000	PH	FD
ASB	6A	081484	SILVER	LT	2.0000	UGL	EE
ASB	6A	081484	GROSS ALPHA		5.0000	PCL	CP
ASB	6A	081484	ARSENIC	LT	1.0000	UGL	EE
ASB	6A	081484	BARIUM		9.0000	UGL	EE
ASB	6A	081484	BERYLLIUM	LT	2.0000	UGL	EE
ASB	6A	081484	NONVOLATILE BETA		4.0000	PCL	CP
ASB	6A	081484	CADMIUM	LT	2.0000	UGL	EE
ASB	6A	081484	CHLORIDE		8060.0000	UGL	EE
ASB	6A	081484	COLOR		16.0000	APC	EE
ASB	6A	081484	SPECIFIC CONDUCTANCE		50.0000	UMHC	FD
ASB	6A	081484	CHROMIUM	LT	4.0000	UGL	EE
ASB	6A	081484	COPPER	LT	4.0000	UGL	EE
ASB	6A	081484	CYANIDE	LT	5.0000	UGL	EE
ASB	6A	081484	DISSOLVED ORGANIC CARBON	LT	5000.0000	UGL	EE
ASB	6A	081484	FLUORIDE		120.0000	UGL	EE
ASB	6A	081484	IRON		40.0000	UGL	EE
ASB	6A	081484	GC SCAN	LT	40.0000	UGL	EE
ASB	6A	081484	MERCURY	LT	0.2000	UGL	EE
ASB	6A	081484	MANGANESE		40.0000	UGL	EE
ASB	6A	081484	SODIUM		2680.0000	UGL	EE
ASB	6A	081484	NICKEL	LT	4.0000	UGL	EE
ASB	6A	081484	NITRITE AS NITROGEN	LT	500.0000	UGL	EE
ASB	6A	081484	NITRATE AS NITROGEN		750.0000	UGL	EE
ASB	6A	081484	ODOR		0.0000	THON	EE
ASB	6A	081484	LEAD		16.0000	UGL	EE
ASB	6A	081484	PH		4.6000	PH	FD
ASB	6A	081484	PHENOLS		5.0000	UGL	EE
ASB	6A	081484	SELENIUM	LT	1.0000	UGL	EE
ASB	6A	081484	SILVEX	LT	2.0000	UGL	EE
ASB	6A	081484	SULFATE	LT	10000.0000	UGL	EE
ASB	6A	081484	SULFIDE	LT	1000.0000	UGL	EE
ASB	6A	081484	SURFACTANTS	LT	10.0000	UGL	EE
ASB	6A	081484	SURFACTANTS	LT	10.0000	UGL	EE
ASB	6A	081484	TOTAL DISSOLVED SOLIDS		22000.0000	UGL	EE
ASB	6A	081484	TOTAL ORGANIC CARBON	LT	5000.0000	UGL	EE
ASB	6A	081484	TOTAL RADIUM		6.0000	PCL	CP
ASB	6A	081484	TOTAL ORGANIC HALOGENS		19.0000	UGL	MM
ASB	6A	081484	TURBIDITY		150.0000	TU	EE
ASB	6A	081484	2,4-DICHLOROPHENOXYACETIC ACID	LT	20.0000	UGL	EE
ASB	6A	081484	ZINC		36.0000	UGL	EE
ASB	6A	102284	SILVER	LT	2.0000	UGL	EE
ASB	6A	102284	GROSS ALPHA	LT	2.0000	PCL	CP
ASB	6A	102284	ARSENIC	LT	1.0000	UGL	EE
ASB	6A	102284	BARIUM		10.0000	UGL	EE
ASB	6A	102284	BERYLLIUM	LT	2.0000	UGL	EE
ASB	6A	102284	NONVOLATILE BETA	LT	3.0000	PCL	CP
ASB	6A	102284	CADMIUM	LT	2.0000	UGL	EE
ASB	6A	102284	CHLORIDE		7200.0000	UGL	EE
ASB	6A	102284	COLOR		0.0000	APC	EE
ASB	6A	102284	SPECIFIC CONDUCTANCE		62.0000	UMHC	FD
ASB	6A	102284	CORROSIVITY		0.0048	MMY	EE
ASB	6A	102284	CHROMIUM	LT	4.0000	UGL	EE
ASB	6A	102284	COPPER		15.0000	UGL	EE
ASB	6A	102284	CYANIDE	LT	5.0000	UGL	EE
ASB	6A	102284	DISSOLVED ORGANIC CARBON	LT	5000.0000	UGL	EE
ASB	6A	102284	ENDRIN	LT	0.0400	UGL	EE
ASB	6A	102284	FLUORIDE	LT	100.0000	UGL	EE
ASB	6A	102284	IRON		36.0000	UGL	EE
ASB	6A	102284	GC SCAN	LT	40.0000	UGL	EE
ASB	6A	102284	MERCURY	LT	0.2000	UGL	EE

Raw Data for ASB 6A

ASB	6A	102284	LINDANE	LT	1.0000	UGL	EE
ASB	6A	102284	METHOXYCHLOR	LT	20.0000	UGL	EE
ASB	6A	102284	MANGANESE		43.0000	UGL	EE
ASB	6A	102284	SODIUM		3340.0000	UGL	EE
ASB	6A	102284	NICKEL	LT	4.0000	UGL	EE
ASB	6A	102284	NITRITE AS NITROGEN	LT	500.0000	UGL	EE
ASB	6A	102284	NITRATE AS NITROGEN	LT	500.0000	UGL	EE
ASB	6A	102284	ODOR		0.0000	THON	EE
ASB	6A	102284	LEAD		36.0000	UGL	EE
ASB	6A	102284	PH		4.1000	PH	FD
ASB	6A	102284	PHENOLS	LT	2.0000	UGL	EE
ASB	6A	102284	SELENIUM	LT	1.0000	UGL	EE
ASB	6A	102284	SILVEX	LT	2.0000	UGL	EE
ASB	6A	102284	SULFATE	LT	5000.0000	UGL	EE
ASB	6A	102284	SULFIDE	LT	1000.0000	UGL	EE
ASB	6A	102284	SURFACTANTS	LT	10.0000	UGL	EE
ASB	6A	102284	TOTAL DISSOLVED SOLIDS	LT	5000.0000	UGL	EE
ASB	6A	102284	TOTAL DISSOLVED SOLIDS	LT	5000.0000	UGL	EE
ASB	6A	102284	TOTAL ORGANIC CARBON	LT	5000.0000	UGL	EE
ASB	6A	102284	TOTAL RADIUM	LT	1.0000	PCL	CP
ASB	6A	102284	TOTAL ORGANIC HALOGENS		11.0000	UGL	MM
ASB	6A	102284	TURBIDITY		2.1500	TU	EE
ASB	6A	102284	TOXAPHENE	LT	1.0000	UGL	EE
ASB	6A	102284	2,4-DICHLOROPHENOXYACETIC ACID	LT	20.0000	UGL	EE
ASB	6A	102284	ZINC		37.0000	UGL	EE
ASB	6A	022585	SILVER	LT	2.0000	UGL	EE
ASB	6A	022585	GROSS ALPHA		9.0000	PCL	CP
ASB	6A	022585	ARSENIC	LT	1.0000	UGL	EE
ASB	6A	022585	BARIUM		7.0000	UGL	EE
ASB	6A	022585	NONVOLATILE BETA		7.0000	PCL	CP
ASB	6A	022585	CADMIUM	LT	2.0000	UGL	EE
ASB	6A	022585	CHLORIDE		6800.0000	UGL	EE
ASB	6A	022585	SPECIFIC CONDUCTANCE		57.0000	UMHC	FD
ASB	6A	022585	CHROMIUM	LT	4.0000	UGL	EE
ASB	6A	022585	ENDRIN	LT	0.0400	UGL	EE
ASB	6A	022585	FLUORIDE	LT	100.0000	UGL	EE
ASB	6A	022585	IRON	LT	4.0000	UGL	EE
ASB	6A	022585	MERCURY	LT	0.2000	UGL	EE
ASB	6A	022585	MERCURY		0.2400	UGL	EE
ASB	6A	022585	LINDANE	LT	1.0000	UGL	EE
ASB	6A	022585	METHOXYCHLOR	LT	20.0000	UGL	EE
ASB	6A	022585	MANGANESE		9.0000	UGL	EE
ASB	6A	022585	SODIUM		4210.0000	UGL	EE
ASB	6A	022585	NITRATE AS NITROGEN		1000.0000	UGL	EE
ASB	6A	022585	LEAD	LT	4.0000	UGL	EE
ASB	6A	022585	PH		4.1000	PH	FD
ASB	6A	022585	PHENOLS	LT	2.0000	UGL	EE
ASB	6A	022585	SELENIUM	LT	1.0000	UGL	EE
ASB	6A	022585	SILVEX	LT	2.0000	UGL	EE
ASB	6A	022585	SULFATE	LT	5000.0000	UGL	EE
ASB	6A	022585	TOTAL ORGANIC CARBON		1265.0000	UGL	EE
ASB	6A	022585	TOTAL RADIUM		4.0000	PCL	CP
ASB	6A	022585	TOTAL ORGANIC HALOGENS		44.3000	UGL	EE
ASB	6A	022585	TURBIDITY		5.2000	TU	EE
ASB	6A	022585	TOXAPHENE	LT	1.0000	UGL	EE
ASB	6A	022585	2,4-DICHLOROPHENOXYACETIC ACID	LT	20.0000	UGL	EE
ASB	6A	042385	SPECIFIC CONDUCTANCE		40.0000	UMHC	FD
ASB	6A	042385	CHROMIUM	LT	4.0000	UGL	EE
ASB	6A	042385	MERCURY	LT	0.2000	UGL	EE
ASB	6A	042385	SODIUM		3676.0000	UGL	EE
ASB	6A	042385	LEAD		7.0000	UGL	EE
ASB	6A	042385	PH		4.6000	PH	FD
ASB	6A	042385	TOTAL ORGANIC CARBON		481.0000	UGL	EE
ASB	6A	042385	TOTAL ORGANIC HALOGENS		13.4000	UGL	EE

Raw Data for ASB 6A

ASB	6A	082685	SPECIFIC CONDUCTANCE		41.0000	UMHC	FD
ASB	6A	082685	CHROMIUM	LT	4.0000	UGL	EE
ASB	6A	082685	CHROMIUM	LT	4.0000	UGL	EE
ASB	6A	082685	MERCURY	LT	0.2000	UGL	EE
ASB	6A	082685	SODIUM		4270.0000	UGL	EE
ASB	6A	082685	SODIUM		4350.0000	UGL	EE
ASB	6A	082685	LEAD	LT	10.0000	UGL	EE
ASB	6A	082685	LEAD		10.0000	UGL	EE
ASB	6A	082685	PH		3.9000	PH	FD
ASB	6A	082685	TOTAL ORGANIC CARBON		610.0000	UGL	EE
ASB	6A	082685	TOTAL ORGANIC HALOGENS		9.0000	UGL	EE
ASB	6A	102985	SPECIFIC CONDUCTANCE		37.0000	UMHC	FD
ASB	6A	102985	CHROMIUM	LT	4.0000	UGL	EE
ASB	6A	102985	MERCURY	LT	0.2000	UGL	EE
ASB	6A	102985	MERCURY	LT	0.2000	UGL	EE
ASB	6A	102985	SODIUM		4990.0000	UGL	EE
ASB	6A	102985	LEAD		13.0000	UGL	EE
ASB	6A	102985	PH		4.2000	PH	FD
ASB	6A	102985	TOTAL ORGANIC CARBON		600.0000	UGL	EE
ASB	6A	102985	TOTAL ORGANIC HALOGENS		13.0000	UGL	EE
ASB	6A	021286	GROSS ALPHA		11.0000	PCL	CP
ASB	6A	021286	NONVOLATILE BETA		11.0000	PCL	CP
ASB	6A	021286	CHLORIDE		6400.0000	UGL	EE
ASB	6A	021286	SPECIFIC CONDUCTANCE		39.0000	UMHC	FD
ASB	6A	021286	IRON		49.0000	UGL	EE
ASB	6A	021286	IRON		38.0000	UGL	EE
ASB	6A	021286	MERCURY	LT	0.2000	UGL	EE
ASB	6A	021286	MANGANESE		27.0000	UGL	EE
ASB	6A	021286	MANGANESE		30.0000	UGL	EE
ASB	6A	021286	SODIUM		4950.0000	UGL	EE
ASB	6A	021286	SODIUM		4540.0000	UGL	EE
ASB	6A	021286	PH		4.0000	PH	FD
ASB	6A	021286	PHENOLS	LT	2.0000	UGL	EE
ASB	6A	021286	SULFATE	LT	5000.0000	UGL	EE
ASB	6A	021286	TOTAL ORGANIC CARBON	LT	1000.0000	UGL	EE
ASB	6A	021286	TOTAL RADIUM		7.0000	PCL	CP
ASB	6A	021286	TOTAL ORGANIC HALOGENS		9.0000	UGL	EE
ASB	6A	041886	SPECIFIC CONDUCTANCE		39.0000	UMHC	FD
ASB	6A	041886	CHROMIUM	LT	4.0000	UGL	EE
ASB	6A	041886	NICKEL	LT	4.0000	UGL	EE
ASB	6A	041886	LEAD		11.0000	UGL	EE
ASB	6A	041886	PH		4.5000	PH	FD
ASB	6A	041886	ZINC	LT	2.0000	UGL	EE
ASB	6A	080686	GROSS ALPHA		5.3000	PCL	RM
ASB	6A	080686	SPECIFIC CONDUCTANCE		41.0000	UMHC	FD
ASB	6A	080686	CHROMIUM	LT	4.0000	UGL	EE
ASB	6A	080686	MANGANESE		35.0000	UGL	EE
ASB	6A	080686	LEAD		8.0000	UGL	EE
ASB	6A	080686	PH		4.2000	PH	FD
ASB	6A	080686	TOTAL ORGANIC CARBON	LT	1000.0000	UGL	EE
ASB	6A	080686	TOTAL RADIUM		4.5000	PCL	RM
ASB	6A	080686	TOTAL ORGANIC HALOGENS		10.0000	UGL	EE
ASB	6A	101186	BROMODICHLOROMETHANE	LT	5.0000	UGL	EE
ASB	6A	101186	TRICHLOROFLUOROMETHANE	LT	5.0000	UGL	EE
ASB	6A	101186	CARBON TETRACHLORIDE	LT	5.0000	UGL	EE
ASB	6A	101186	BROMOFORM	LT	10.0000	UGL	EE
ASB	6A	101186	CHLOROFORM	LT	5.0000	UGL	EE
ASB	6A	101186	BROMOMETHANE	LT	10.0000	UGL	EE
ASB	6A	101186	CHLOROMETHANE	LT	10.0000	UGL	EE
ASB	6A	101186	CHLOROBENZENE	LT	5.0000	UGL	EE
ASB	6A	101186	SPECIFIC CONDUCTANCE		48.0000	UMHC	FD
ASB	6A	101186	CHROMIUM	LT	4.0000	UGL	EE
ASB	6A	101186	CHLOROETHENE	LT	10.0000	UGL	EE
ASB	6A	101186	CHLOROETHANE	LT	10.0000	UGL	EE

Raw Data for ASB 6A

ASB	6A	101186	BENZENE	LT	5.0000	UGL	EE
ASB	6A	101186	DIBROMOCHLOROMETHANE	LT	5.0000	UGL	EE
ASB	6A	101186	ETHYLBENZENE	LT	5.0000	UGL	EE
ASB	6A	101186	TOLUENE-D8		94.0000	PER	EE
ASB	6A	101186	TOLUENE	LT	5.0000	UGL	EE
ASB	6A	101186	SODIUM		3200.0000	UGL	EE
ASB	6A	101186	P-BROMOFLUOROBENZENE		105.0000	PER	EE
ASB	6A	101186	PH		4.8000	PH	FD
ASB	6A	101186	1,1,2,2-TETRACHLOROETHANE	LT	10.0000	UGL	EE
ASB	6A	101186	TETRACHLOROETHYLENE		8.0000	UGL	EE
ASB	6A	101186	TOTAL ORGANIC HALOGENS		8.0000	UGL	EE
ASB	6A	101186	TRICHLOROETHYLENE	LT	5.0000	UGL	EE
ASB	6A	101186	TRANS-1,2-DICHLOROETHENE	LT	5.0000	UGL	EE
ASB	6A	101186	1,1-DICHLOROETHYLENE	LT	5.0000	UGL	EE
ASB	6A	101186	1,1-DICHLOROETHANE	LT	5.0000	UGL	EE
ASB	6A	101186	1,1,1-TRICHLOROETHANE	LT	5.0000	UGL	EE
ASB	6A	101186	1,1,2-TRICHLOROETHANE	LT	5.0000	UGL	EE
ASB	6A	101186	1,2-DICHLOROETHANE-D4		110.0000	PER	EE
ASB	6A	101186	1,2-DICHLOROETHANE	LT	1.0000	UGL	EE
ASB	6A	101186	1,2-DICHLOROPROPANE	LT	10.0000	UGL	EE
ASB	6A	101186	CIS-1,3-DICHLOROPROPENE	LT	5.0000	UGL	EE
ASB	6A	101186	TRANS-1,3-DICHLOROPROPENE	LT	5.0000	UGL	EE
ASB	6A	101186	2-CHLOROETHYLVINYL ETHER	LT	10.0000	UGL	EE
ASB	6A	020387	SILVER	LT	2.0000	UGL	EE
ASB	6A	020387	GROSS ALPHA		5.0000	PCL	RM
ASB	6A	020387	GROSS ALPHA		3.5000	PCL	RM
ASB	6A	020387	ARSENIC	LT	2.0000	UGL	EE
ASB	6A	020387	BARIUM		9.0000	UGL	EE
ASB	6A	020387	BARIUM		9.0000	UGL	EE
ASB	6A	020387	NONVOLATILE BETA		4.9000	PCL	RM
ASB	6A	020387	NONVOLATILE BETA		3.6000	PCL	RM
ASB	6A	020387	CALCIUM		1500.0000	UGL	EE
ASB	6A	020387	CALCIUM		1600.0000	UGL	EE
ASB	6A	020387	CARBON TETRACHLORIDE	LT	1.0000	UGL	EE
ASB	6A	020387	CADMIUM	LT	2.0000	UGL	EE
ASB	6A	020387	CHLOROFORM	LT	1.0000	UGL	EE
ASB	6A	020387	CHLORIDE		5800.0000	UGL	EE
ASB	6A	020387	SPECIFIC CONDUCTANCE		41.0000	UMHC	FD
ASB	6A	020387	CHROMIUM	LT	4.0000	UGL	EE
ASB	6A	020387	CHROMIUM	LT	4.0000	UGL	EE
ASB	6A	020387	COPPER		4.0000	UGL	EE
ASB	6A	020387	COPPER		5.0000	UGL	EE
ASB	6A	020387	FLUORIDE	LT	100.0000	UGL	EE
ASB	6A	020387	IRON		48.0000	UGL	EE
ASB	6A	020387	IRON		51.0000	UGL	EE
ASB	6A	020387	MERCURY	LT	0.2000	UGL	EE
ASB	6A	020387	POTASSIUM		450.0000	UGL	EE
ASB	6A	020387	MAGNESIUM		761.0000	UGL	EE
ASB	6A	020387	MAGNESIUM		720.0000	UGL	EE
ASB	6A	020387	MANGANESE		38.0000	UGL	EE
ASB	6A	020387	MANGANESE		37.0000	UGL	EE
ASB	6A	020387	SODIUM		3210.0000	UGL	EE
ASB	6A	020387	SODIUM		3020.0000	UGL	EE
ASB	6A	020387	NICKEL	LT	4.0000	UGL	EE
ASB	6A	020387	NICKEL	LT	4.0000	UGL	EE
ASB	6A	020387	NITRATE AS NITROGEN		330.0000	UGL	EE
ASB	6A	020387	LEAD		8.0000	UGL	EE
ASB	6A	020387	LEAD		11.0000	UGL	EE
ASB	6A	020387	PH		4.7000	PH	FD
ASB	6A	020387	PHENOLS	LT	2.0000	UGL	EE
ASB	6A	020387	SELENIUM	LT	2.0000	UGL	EE
ASB	6A	020387	SILICA		2600.0000	UGL	EE
ASB	6A	020387	SULFATE		5000.0000	UGL	EE
ASB	6A	020387	TETRACHLOROETHYLENE		4.9400	UGL	EE

T-Test Data

This Page Intentionally Left Blank.

T-Test Data for ASB 6A

OBS	SERIES	WELL	DATE	TESTNAME	VALUE
1	ASB	BKG	12687	ALUMINUM	43.00
2	ASB	BKG	12987	ALUMINUM	35.33
3	ASB	BKG	20789	ALUMINUM	80.00
4	ASB	BKG	22488	ALUMINUM	59.00
5	ASB	BKG	31289	ALUMINUM	46.50
6	ASB	BKG	40687	ALUMINUM	42.50
7	ASB	BKG	51088	ALUMINUM	253.00
8	ASB	BKG	51188	ALUMINUM	314.00
9	ASB	BKG	61886	ALUMINUM	62.00
10	ASB	BKG	72286	ALUMINUM	37.50
11	ASB	BKG	72386	ALUMINUM	45.00
12	ASB	BKG	80487	ALUMINUM	61.00
13	ASB	BKG	81388	ALUMINUM	42.00
14	ASB	BKG	81488	ALUMINUM	43.00
15	ASB	BKG	102888	ALUMINUM	51.00
16	ASB	BKG	110286	ALUMINUM	33.00
17	ASB	BKG	110386	ALUMINUM	37.67
18	ASB	BKG	110888	ALUMINUM	44.00
19	ASB	BKG	121787	ALUMINUM	74.00
20	ASB	BKG	121987	ALUMINUM	79.00
21	ASB	6A	20387	BARIUM	9.00
22	ASB	6A	22585	BARIUM	7.00
23	ASB	6A	32789	BARIUM	9.00
24	ASB	6A	70788	BARIUM	8.00
25	ASB	6A	81484	BARIUM	9.00
26	ASB	6A	102284	BARIUM	10.00
27	ASB	BKG	12687	BARIUM	7.50
28	ASB	BKG	12987	BARIUM	3.33
29	ASB	BKG	20789	BARIUM	5.00
30	ASB	BKG	22488	BARIUM	8.00
31	ASB	BKG	31289	BARIUM	8.50
32	ASB	BKG	51088	BARIUM	7.00
33	ASB	BKG	51188	BARIUM	2.00
34	ASB	BKG	61886	BARIUM	2.00
35	ASB	BKG	72286	BARIUM	4.00
36	ASB	BKG	72386	BARIUM	7.00
37	ASB	BKG	80487	BARIUM	6.50
38	ASB	BKG	81388	BARIUM	2.00
39	ASB	BKG	81488	BARIUM	6.00
40	ASB	BKG	102888	BARIUM	4.00
41	ASB	BKG	110286	BARIUM	2.00
42	ASB	BKG	110386	BARIUM	7.00
43	ASB	BKG	110888	BARIUM	9.00
44	ASB	BKG	121787	BARIUM	14.00
45	ASB	BKG	121987	BARIUM	5.00
46	ASB	6A	20387	CALCIUM	1550.00
47	ASB	6A	32789	CALCIUM	1210.00
48	ASB	6A	70788	CALCIUM	1550.00
49	ASB	BKG	12687	CALCIUM	265.00
50	ASB	BKG	12987	CALCIUM	876.33
51	ASB	BKG	110286	CALCIUM	983.50
52	ASB	BKG	110386	CALCIUM	655.00
53	ASB	6A	12788	CHLORIDE	7700.00
54	ASB	6A	20387	CHLORIDE	5800.00

T-Test Data for ASB 6A

OBS	SERIES	WELL	DATE	TESTNAME	VALUE
55	ASB	6A	21286	CHLORIDE	6400.00
56	ASB	6A	22585	CHLORIDE	6800.00
57	ASB	6A	32789	CHLORIDE	7800.00
58	ASB	6A	70788	CHLORIDE	7600.00
59	ASB	6A	81484	CHLORIDE	8060.00
60	ASB	6A	102284	CHLORIDE	7200.00
61	ASB	BKG	12687	CHLORIDE	2500.00
62	ASB	BKG	12987	CHLORIDE	2900.00
63	ASB	BKG	20789	CHLORIDE	2200.00
64	ASB	BKG	22488	CHLORIDE	2150.00
65	ASB	BKG	31289	CHLORIDE	2500.00
66	ASB	BKG	51088	CHLORIDE	2450.00
67	ASB	BKG	51188	CHLORIDE	2000.00
68	ASB	BKG	61886	CHLORIDE	4166.67
69	ASB	BKG	72286	CHLORIDE	2270.00
70	ASB	BKG	72386	CHLORIDE	2270.00
71	ASB	BKG	80487	CHLORIDE	2950.00
72	ASB	BKG	81388	CHLORIDE	2400.00
73	ASB	BKG	81488	CHLORIDE	2300.00
74	ASB	BKG	102888	CHLORIDE	2100.00
75	ASB	BKG	110286	CHLORIDE	3400.00
76	ASB	BKG	110386	CHLORIDE	2800.00
77	ASB	BKG	110888	CHLORIDE	2200.00
78	ASB	BKG	121987	CHLORIDE	2400.00
79	ASB	6A	12788	COPPER	2.00
80	ASB	6A	20387	COPPER	4.50
81	ASB	6A	32789	COPPER	4.00
82	ASB	6A	81484	COPPER	2.00
83	ASB	6A	102284	COPPER	15.00
84	ASB	BKG	12687	COPPER	4.50
85	ASB	BKG	12987	COPPER	2.00
86	ASB	BKG	20789	COPPER	11.00
87	ASB	BKG	22488	COPPER	7.50
88	ASB	BKG	31289	COPPER	5.50
89	ASB	BKG	51088	COPPER	6.00
90	ASB	BKG	51188	COPPER	5.00
91	ASB	BKG	61886	COPPER	5.50
92	ASB	BKG	72286	COPPER	6.00
93	ASB	BKG	72386	COPPER	3.00
94	ASB	BKG	80487	COPPER	8.50
95	ASB	BKG	81388	COPPER	2.00
96	ASB	BKG	81488	COPPER	4.00
97	ASB	BKG	102888	COPPER	5.00
98	ASB	BKG	110286	COPPER	9.50
99	ASB	BKG	110386	COPPER	9.00
100	ASB	BKG	110888	COPPER	15.00
101	ASB	BKG	121787	COPPER	15.00
102	ASB	BKG	121987	COPPER	5.00
103	ASB	6A	12788	GROSS ALPHA	19.00
104	ASB	6A	20387	GROSS ALPHA	4.50
105	ASB	6A	21286	GROSS ALPHA	11.00
106	ASB	6A	22585	GROSS ALPHA	9.00
107	ASB	6A	32789	GROSS ALPHA	7.00
108	ASB	6A	70788	GROSS ALPHA	14.00

T-Test Data for ASB 6A

OBS	SERIES	WELL	DATE	TESTNAME	VALUE
109	ASB	6A	80287	GROSS ALPHA	3.500
110	ASB	6A	80686	GROSS ALPHA	5.000
111	ASB	6A	81484	GROSS ALPHA	5.000
112	ASB	6A	102284	GROSS ALPHA	1.000
113	ASB	BKG	12687	GROSS ALPHA	7.000
114	ASB	BKG	12987	GROSS ALPHA	1.000
115	ASB	BKG	20789	GROSS ALPHA	1.500
116	ASB	BKG	22488	GROSS ALPHA	14.500
117	ASB	BKG	31289	GROSS ALPHA	23.750
118	ASB	BKG	40687	GROSS ALPHA	5.250
119	ASB	BKG	61886	GROSS ALPHA	5.750
120	ASB	BKG	72286	GROSS ALPHA	1.500
121	ASB	BKG	72386	GROSS ALPHA	7.000
122	ASB	BKG	80487	GROSS ALPHA	3.750
123	ASB	BKG	110286	GROSS ALPHA	1.500
124	ASB	BKG	110386	GROSS ALPHA	7.500
125	ASB	BKG	121787	GROSS ALPHA	22.000
126	ASB	BKG	121987	GROSS ALPHA	1.000
127	ASB	6A	12788	IRON	106.000
128	ASB	6A	20387	IRON	49.500
129	ASB	6A	21286	IRON	43.500
130	ASB	6A	22585	IRON	2.000
131	ASB	6A	32789	IRON	98.000
132	ASB	6A	70788	IRON	117.000
133	ASB	6A	80287	IRON	71.000
134	ASB	6A	81484	IRON	40.000
135	ASB	6A	102284	IRON	36.000
136	ASB	BKG	12687	IRON	19.500
137	ASB	BKG	12987	IRON	31.500
138	ASB	BKG	61886	IRON	39.000
139	ASB	BKG	72286	IRON	31.500
140	ASB	BKG	72386	IRON	31.333
141	ASB	BKG	80487	IRON	76.500
142	ASB	BKG	110286	IRON	33.500
143	ASB	BKG	110386	IRON	27.667
144	ASB	BKG	121787	IRON	33.000
145	ASB	BKG	121987	IRON	40.000
146	ASB	6A	12788	LEAD	10.000
147	ASB	6A	20387	LEAD	9.500
148	ASB	6A	22585	LEAD	2.000
149	ASB	6A	32789	LEAD	7.000
150	ASB	6A	41886	LEAD	11.000
151	ASB	6A	42385	LEAD	7.000
152	ASB	6A	70788	LEAD	8.000
153	ASB	6A	80287	LEAD	14.000
154	ASB	6A	80686	LEAD	8.000
155	ASB	6A	81484	LEAD	16.000
156	ASB	6A	82685	LEAD	7.500
157	ASB	6A	102284	LEAD	36.000
158	ASB	6A	102985	LEAD	13.000
159	ASB	BKG	12687	LEAD	11.500
160	ASB	BKG	12987	LEAD	8.667
161	ASB	BKG	20789	LEAD	20.000
162	ASB	BKG	22488	LEAD	8.500

T-Test Data for ASB 6A

OBS	SERIES	WELL	DATE	TESTNAME	VALUE
163	ASB	BKG	31289	LEAD	3.00
164	ASB	BKG	40687	LEAD	11.00
165	ASB	BKG	51088	LEAD	11.00
166	ASB	BKG	51188	LEAD	9.00
167	ASB	BKG	61886	LEAD	24.50
168	ASB	BKG	72286	LEAD	22.50
169	ASB	BKG	72386	LEAD	28.33
170	ASB	BKG	80487	LEAD	9.50
171	ASB	BKG	81388	LEAD	3.00
172	ASB	BKG	81488	LEAD	3.00
173	ASB	BKG	102888	LEAD	9.50
174	ASB	BKG	110286	LEAD	17.00
175	ASB	BKG	110386	LEAD	17.67
176	ASB	BKG	110888	LEAD	15.00
177	ASB	BKG	121787	LEAD	8.00
178	ASB	BKG	121987	LEAD	9.00
179	ASB	BKG	12687	MAGNESIUM	435.00
180	ASB	BKG	12987	MAGNESIUM	481.00
181	ASB	BKG	110286	MAGNESIUM	485.00
182	ASB	BKG	110386	MAGNESIUM	443.33
183	ASB	6A	12788	MANGANESE	48.00
184	ASB	6A	20387	MANGANESE	37.50
185	ASB	6A	21286	MANGANESE	28.50
186	ASB	6A	22585	MANGANESE	9.00
187	ASB	6A	32789	MANGANESE	27.00
188	ASB	6A	70788	MANGANESE	32.00
189	ASB	6A	80287	MANGANESE	46.00
190	ASB	6A	80686	MANGANESE	35.00
191	ASB	6A	81484	MANGANESE	40.00
192	ASB	6A	102284	MANGANESE	43.00
193	ASB	BKG	12687	MANGANESE	3.50
194	ASB	BKG	12987	MANGANESE	19.33
195	ASB	BKG	20789	MANGANESE	17.00
196	ASB	BKG	31289	MANGANESE	3.50
197	ASB	BKG	61886	MANGANESE	14.00
198	ASB	BKG	72286	MANGANESE	24.50
199	ASB	BKG	72386	MANGANESE	5.00
200	ASB	BKG	80487	MANGANESE	11.00
201	ASB	BKG	81388	MANGANESE	13.00
202	ASB	BKG	81488	MANGANESE	3.00
203	ASB	BKG	110286	MANGANESE	21.00
204	ASB	BKG	110386	MANGANESE	5.00
205	ASB	BKG	121787	MANGANESE	14.00
206	ASB	BKG	121987	MANGANESE	15.00
207	ASB	6A	20387	NITRATE AS NITROGEN	330.00
208	ASB	6A	22585	NITRATE AS NITROGEN	1000.00
209	ASB	6A	32789	NITRATE AS NITROGEN	452.00
210	ASB	6A	70788	NITRATE AS NITROGEN	290.00
211	ASB	6A	81484	NITRATE AS NITROGEN	750.00
212	ASB	6A	102284	NITRATE AS NITROGEN	250.00
213	ASB	BKG	12687	NITRATE AS NITROGEN	2180.00
214	ASB	BKG	12987	NITRATE AS NITROGEN	1200.00
215	ASB	BKG	20789	NITRATE AS NITROGEN	998.00
216	ASB	BKG	22488	NITRATE AS NITROGEN	1525.00

T-Test Data for ASB 6A

OBS	SERIES	WELL	DATE	TESTNAME	VALUE
217	ASB	BKG	31289	NITRATE AS NITROGEN	1990.00
218	ASB	BKG	40687	NITRATE AS NITROGEN	1670.00
219	ASB	BKG	51088	NITRATE AS NITROGEN	1560.00
220	ASB	BKG	51188	NITRATE AS NITROGEN	880.00
221	ASB	BKG	61886	NITRATE AS NITROGEN	1783.33
222	ASB	BKG	72286	NITRATE AS NITROGEN	1190.00
223	ASB	BKG	72386	NITRATE AS NITROGEN	2070.00
224	ASB	BKG	80487	NITRATE AS NITROGEN	1675.00
225	ASB	BKG	81388	NITRATE AS NITROGEN	1080.00
226	ASB	BKG	81488	NITRATE AS NITROGEN	1980.00
227	ASB	BKG	102888	NITRATE AS NITROGEN	1210.00
228	ASB	BKG	110286	NITRATE AS NITROGEN	1170.00
229	ASB	BKG	110386	NITRATE AS NITROGEN	2140.00
230	ASB	BKG	110888	NITRATE AS NITROGEN	2240.00
231	ASB	BKG	121787	NITRATE AS NITROGEN	3040.00
232	ASB	BKG	121987	NITRATE AS NITROGEN	1370.00
233	ASB	6A	12788	NONVOLATILE BETA	11.00
234	ASB	6A	20387	NONVOLATILE BETA	4.50
235	ASB	6A	21286	NONVOLATILE BETA	11.00
236	ASB	6A	22585	NONVOLATILE BETA	7.00
237	ASB	6A	32789	NONVOLATILE BETA	4.00
238	ASB	6A	70788	NONVOLATILE BETA	8.00
239	ASB	6A	81484	NONVOLATILE BETA	4.00
240	ASB	6A	102284	NONVOLATILE BETA	1.50
241	ASB	BKG	12687	NONVOLATILE BETA	5.00
242	ASB	BKG	12987	NONVOLATILE BETA	2.00
243	ASB	BKG	20789	NONVOLATILE BETA	1.00
244	ASB	BKG	22488	NONVOLATILE BETA	8.67
245	ASB	BKG	31289	NONVOLATILE BETA	14.25
246	ASB	BKG	40687	NONVOLATILE BETA	4.50
247	ASB	BKG	61886	NONVOLATILE BETA	4.00
248	ASB	BKG	72286	NONVOLATILE BETA	1.00
249	ASB	BKG	72386	NONVOLATILE BETA	4.00
250	ASB	BKG	80487	NONVOLATILE BETA	3.00
251	ASB	BKG	110286	NONVOLATILE BETA	1.00
252	ASB	BKG	110386	NONVOLATILE BETA	5.50
253	ASB	BKG	121787	NONVOLATILE BETA	14.00
254	ASB	BKG	121987	NONVOLATILE BETA	3.00
255	ASB	6A	12788	PH	5.00
256	ASB	6A	20387	PH	5.00
257	ASB	6A	21286	PH	4.00
258	ASB	6A	22585	PH	4.00
259	ASB	6A	32384	PH	6.00
260	ASB	6A	32789	PH	5.00
261	ASB	6A	40588	PH	5.00
262	ASB	6A	41284	PH	6.00
263	ASB	6A	41886	PH	5.00
264	ASB	6A	42385	PH	5.00
265	ASB	6A	42687	PH	5.00
266	ASB	6A	70788	PH	5.00
267	ASB	6A	80287	PH	6.00
268	ASB	6A	80686	PH	4.00
269	ASB	6A	81484	PH	5.00
270	ASB	6A	82685	PH	4.00

T-Test Data for ASB 6A

OBS	SERIES	WELL	DATE	TESTNAME	VALUE
271	ASB	6A	100288	PH	5.0
272	ASB	6A	101186	PH	5.0
273	ASB	6A	101887	PH	5.0
274	ASB	6A	102284	PH	4.0
275	ASB	6A	102985	PH	4.0
276	ASB	BKG	12687	PH	5.0
277	ASB	BKG	12987	PH	4.0
278	ASB	BKG	20789	PH	5.0
279	ASB	BKG	22488	PH	5.0
280	ASB	BKG	31289	PH	4.0
281	ASB	BKG	40687	PH	4.5
282	ASB	BKG	51088	PH	4.0
283	ASB	BKG	51188	PH	5.0
284	ASB	BKG	61886	PH	5.0
285	ASB	BKG	72286	PH	5.0
286	ASB	BKG	72386	PH	5.0
287	ASB	BKG	80487	PH	5.0
288	ASB	BKG	81388	PH	5.0
289	ASB	BKG	81488	PH	4.0
290	ASB	BKG	90687	PH	5.0
291	ASB	BKG	90887	PH	5.0
292	ASB	BKG	102888	PH	5.0
293	ASB	BKG	110286	PH	4.0
294	ASB	BKG	110386	PH	4.0
295	ASB	BKG	110888	PH	5.0
296	ASB	BKG	121787	PH	4.0
297	ASB	BKG	121987	PH	5.0
298	ASB	6A	12788	SODIUM	4670.0
299	ASB	6A	20387	SODIUM	3115.0
300	ASB	6A	21286	SODIUM	4745.0
301	ASB	6A	22585	SODIUM	4210.0
302	ASB	6A	32789	SODIUM	6900.0
303	ASB	6A	42385	SODIUM	3676.0
304	ASB	6A	70788	SODIUM	4790.0
305	ASB	6A	80287	SODIUM	3640.0
306	ASB	6A	81484	SODIUM	2680.0
307	ASB	6A	82685	SODIUM	4310.0
308	ASB	6A	101186	SODIUM	3200.0
309	ASB	6A	102284	SODIUM	3340.0
310	ASB	6A	102985	SODIUM	4990.0
311	ASB	BKG	12687	SODIUM	4475.0
312	ASB	BKG	12987	SODIUM	1990.0
313	ASB	BKG	20789	SODIUM	1740.0
314	ASB	BKG	22488	SODIUM	2610.0
315	ASB	BKG	31289	SODIUM	2530.0
316	ASB	BKG	40687	SODIUM	2840.0
317	ASB	BKG	51088	SODIUM	3700.0
318	ASB	BKG	51188	SODIUM	1680.0
319	ASB	BKG	61886	SODIUM	2620.0
320	ASB	BKG	72286	SODIUM	1935.0
321	ASB	BKG	72386	SODIUM	4330.0
322	ASB	BKG	80487	SODIUM	2620.0
323	ASB	BKG	81388	SODIUM	1630.0
324	ASB	BKG	81488	SODIUM	3360.0

T-Test Data for ASB 6A

OBS	SERIES	WELL	DATE	TESTNAME	VALUE
325	ASB	BKG	102888	SODIUM	1730.0
326	ASB	BKG	110286	SODIUM	1725.0
327	ASB	BKG	110386	SODIUM	3880.0
328	ASB	BKG	110888	SODIUM	3280.0
329	ASB	BKG	121787	SODIUM	3460.0
330	ASB	BKG	121987	SODIUM	1660.0
331	ASB	6A	12788	SPECIFIC CONDUCTANCE	47.0
332	ASB	6A	20387	SPECIFIC CONDUCTANCE	41.0
333	ASB	6A	21286	SPECIFIC CONDUCTANCE	39.0
334	ASB	6A	22585	SPECIFIC CONDUCTANCE	57.0
335	ASB	6A	32384	SPECIFIC CONDUCTANCE	50.0
336	ASB	6A	32789	SPECIFIC CONDUCTANCE	55.0
337	ASB	6A	40588	SPECIFIC CONDUCTANCE	54.0
338	ASB	6A	41284	SPECIFIC CONDUCTANCE	43.0
339	ASB	6A	41886	SPECIFIC CONDUCTANCE	39.0
340	ASB	6A	42385	SPECIFIC CONDUCTANCE	40.0
341	ASB	6A	42687	SPECIFIC CONDUCTANCE	44.0
342	ASB	6A	70788	SPECIFIC CONDUCTANCE	50.0
343	ASB	6A	80287	SPECIFIC CONDUCTANCE	44.0
344	ASB	6A	80686	SPECIFIC CONDUCTANCE	41.0
345	ASB	6A	81484	SPECIFIC CONDUCTANCE	50.0
346	ASB	6A	82685	SPECIFIC CONDUCTANCE	41.0
347	ASB	6A	100288	SPECIFIC CONDUCTANCE	54.0
348	ASB	6A	101186	SPECIFIC CONDUCTANCE	48.0
349	ASB	6A	101887	SPECIFIC CONDUCTANCE	53.0
350	ASB	6A	102284	SPECIFIC CONDUCTANCE	62.0
351	ASB	6A	102985	SPECIFIC CONDUCTANCE	37.0
352	ASB	BKG	12687	SPECIFIC CONDUCTANCE	19.0
353	ASB	BKG	12987	SPECIFIC CONDUCTANCE	28.0
354	ASB	BKG	20789	SPECIFIC CONDUCTANCE	28.0
355	ASB	BKG	22488	SPECIFIC CONDUCTANCE	31.5
356	ASB	BKG	31289	SPECIFIC CONDUCTANCE	35.0
357	ASB	BKG	40687	SPECIFIC CONDUCTANCE	30.0
358	ASB	BKG	51088	SPECIFIC CONDUCTANCE	38.0
359	ASB	BKG	51188	SPECIFIC CONDUCTANCE	24.0
360	ASB	BKG	61886	SPECIFIC CONDUCTANCE	26.0
361	ASB	BKG	72286	SPECIFIC CONDUCTANCE	26.0
362	ASB	BKG	72386	SPECIFIC CONDUCTANCE	40.0
363	ASB	BKG	80487	SPECIFIC CONDUCTANCE	31.0
364	ASB	BKG	81388	SPECIFIC CONDUCTANCE	25.0
365	ASB	BKG	81488	SPECIFIC CONDUCTANCE	36.0
366	ASB	BKG	90687	SPECIFIC CONDUCTANCE	29.0
367	ASB	BKG	90887	SPECIFIC CONDUCTANCE	38.0
368	ASB	BKG	102888	SPECIFIC CONDUCTANCE	25.0
369	ASB	BKG	110286	SPECIFIC CONDUCTANCE	32.0
370	ASB	BKG	110386	SPECIFIC CONDUCTANCE	43.0
371	ASB	BKG	110888	SPECIFIC CONDUCTANCE	35.0
372	ASB	BKG	121787	SPECIFIC CONDUCTANCE	28.0
373	ASB	BKG	121987	SPECIFIC CONDUCTANCE	20.0
374	ASB	6A	12788	TETRACHLOROETHYLENE	2.0
375	ASB	6A	20387	TETRACHLOROETHYLENE	5.0
376	ASB	6A	32789	TETRACHLOROETHYLENE	5.0
377	ASB	6A	42687	TETRACHLOROETHYLENE	2.0
378	ASB	6A	70788	TETRACHLOROETHYLENE	0.5

T-Test Data for ASB 6A

OBS	SERIES	WELL	DATE	TESTNAME	VALUE
379	ASB	6A	80287	TETRACHLOROETHYLENE	2.00
380	ASB	6A	101186	TETRACHLOROETHYLENE	8.00
381	ASB	6A	101887	TETRACHLOROETHYLENE	2.00
382	ASB	6A	20387	TOTAL DISSOLVED SOLIDS	11000.00
383	ASB	6A	32789	TOTAL DISSOLVED SOLIDS	32000.00
384	ASB	6A	81484	TOTAL DISSOLVED SOLIDS	22000.00
385	ASB	6A	102284	TOTAL DISSOLVED SOLIDS	2500.00
386	ASB	BKG	12687	TOTAL DISSOLVED SOLIDS	22000.00
387	ASB	BKG	12987	TOTAL DISSOLVED SOLIDS	32000.00
388	ASB	BKG	20789	TOTAL DISSOLVED SOLIDS	2500.00
389	ASB	BKG	22488	TOTAL DISSOLVED SOLIDS	24000.00
390	ASB	BKG	31289	TOTAL DISSOLVED SOLIDS	23000.00
391	ASB	BKG	40687	TOTAL DISSOLVED SOLIDS	28400.00
392	ASB	BKG	51088	TOTAL DISSOLVED SOLIDS	40000.00
393	ASB	BKG	51188	TOTAL DISSOLVED SOLIDS	26000.00
394	ASB	BKG	80487	TOTAL DISSOLVED SOLIDS	64000.00
395	ASB	BKG	81388	TOTAL DISSOLVED SOLIDS	28000.00
396	ASB	BKG	81488	TOTAL DISSOLVED SOLIDS	31000.00
397	ASB	BKG	102888	TOTAL DISSOLVED SOLIDS	112000.00
398	ASB	BKG	110888	TOTAL DISSOLVED SOLIDS	59000.00
399	ASB	BKG	121787	TOTAL DISSOLVED SOLIDS	9000.00
400	ASB	BKG	121987	TOTAL DISSOLVED SOLIDS	52000.00
401	ASB	6A	12788	TOTAL ORGANIC HALOGENS	3.75
402	ASB	6A	20387	TOTAL ORGANIC HALOGENS	8.00
403	ASB	6A	21286	TOTAL ORGANIC HALOGENS	9.00
404	ASB	6A	22585	TOTAL ORGANIC HALOGENS	44.00
405	ASB	6A	32789	TOTAL ORGANIC HALOGENS	2.50
406	ASB	6A	42385	TOTAL ORGANIC HALOGENS	13.00
407	ASB	6A	70788	TOTAL ORGANIC HALOGENS	2.50
408	ASB	6A	80287	TOTAL ORGANIC HALOGENS	2.50
409	ASB	6A	80686	TOTAL ORGANIC HALOGENS	10.00
410	ASB	6A	82685	TOTAL ORGANIC HALOGENS	9.00
411	ASB	6A	101186	TOTAL ORGANIC HALOGENS	8.00
412	ASB	6A	102985	TOTAL ORGANIC HALOGENS	13.00
413	ASB	BKG	12687	TOTAL PHOSPHATES	30.00
414	ASB	BKG	12987	TOTAL PHOSPHATES	40.00
415	ASB	BKG	20789	TOTAL PHOSPHATES	10.00
416	ASB	BKG	31289	TOTAL PHOSPHATES	13.67
417	ASB	BKG	40687	TOTAL PHOSPHATES	10.00
418	ASB	BKG	51088	TOTAL PHOSPHATES	30.00
419	ASB	BKG	51188	TOTAL PHOSPHATES	40.00
420	ASB	BKG	61886	TOTAL PHOSPHATES	9.50
421	ASB	BKG	72286	TOTAL PHOSPHATES	39.00
422	ASB	BKG	72386	TOTAL PHOSPHATES	42.00
423	ASB	BKG	80487	TOTAL PHOSPHATES	15.00
424	ASB	BKG	81388	TOTAL PHOSPHATES	10.00
425	ASB	BKG	81488	TOTAL PHOSPHATES	10.00
426	ASB	BKG	102888	TOTAL PHOSPHATES	10.00
427	ASB	BKG	110286	TOTAL PHOSPHATES	39.50
428	ASB	BKG	110386	TOTAL PHOSPHATES	37.00
429	ASB	BKG	110888	TOTAL PHOSPHATES	60.00
430	ASB	BKG	121787	TOTAL PHOSPHATES	70.00
431	ASB	BKG	121987	TOTAL PHOSPHATES	100.00
432	ASB	6A	12788	TOTAL RADIUM	4.00

T-Test Data for ASB 6A

OBS	SERIES	WELL	DATE	TESTNAME	VALUE
433	ASB	6A	20387	TOTAL RADIUM	4.0000
434	ASB	6A	21286	TOTAL RADIUM	7.0000
435	ASB	6A	22585	TOTAL RADIUM	4.0000
436	ASB	6A	32789	TOTAL RADIUM	3.0000
437	ASB	6A	70788	TOTAL RADIUM	4.0000
438	ASB	6A	80287	TOTAL RADIUM	4.5000
439	ASB	6A	80686	TOTAL RADIUM	5.0000
440	ASB	6A	81484	TOTAL RADIUM	6.0000
441	ASB	6A	102284	TOTAL RADIUM	0.5000
442	ASB	BKG	12687	TOTAL RADIUM	7.0000
443	ASB	BKG	12987	TOTAL RADIUM	0.5000
444	ASB	BKG	20789	TOTAL RADIUM	1.0000
445	ASB	BKG	22488	TOTAL RADIUM	4.8333
446	ASB	BKG	31289	TOTAL RADIUM	12.0000
447	ASB	BKG	40687	TOTAL RADIUM	4.2500
448	ASB	BKG	51088	TOTAL RADIUM	6.0000
449	ASB	BKG	51188	TOTAL RADIUM	0.5000
450	ASB	BKG	61886	TOTAL RADIUM	4.5000
451	ASB	BKG	72286	TOTAL RADIUM	1.0000
452	ASB	BKG	72386	TOTAL RADIUM	9.0000
453	ASB	BKG	80487	TOTAL RADIUM	3.5000
454	ASB	BKG	81388	TOTAL RADIUM	1.0000
455	ASB	BKG	81488	TOTAL RADIUM	7.0000
456	ASB	BKG	102888	TOTAL RADIUM	0.5000
457	ASB	BKG	110286	TOTAL RADIUM	0.5000
458	ASB	BKG	110386	TOTAL RADIUM	7.5000
459	ASB	BKG	110888	TOTAL RADIUM	6.0000
460	ASB	BKG	121787	TOTAL RADIUM	6.0000
461	ASB	BKG	121987	TOTAL RADIUM	0.0000
462	ASB	6A	20387	TRITIUM	3.0000
463	ASB	6A	32789	TRITIUM	2.0000
464	ASB	6A	70788	TRITIUM	1.0000
465	ASB	BKG	40687	TURBIDITY	0.0000
466	ASB	BKG	61886	TURBIDITY	0.6667
467	ASB	BKG	80487	TURBIDITY	0.5000
468	ASB	BKG	121787	TURBIDITY	0.0000
469	ASB	BKG	121987	TURBIDITY	0.0000
470	ASB	6A	20387	ZINC	15.0000
471	ASB	6A	41886	ZINC	1.0000
472	ASB	6A	81484	ZINC	36.0000
473	ASB	6A	102284	ZINC	37.0000
474	ASB	BKG	12687	ZINC	7.0000
475	ASB	BKG	12987	ZINC	8.6667
476	ASB	BKG	20789	ZINC	17.0000
477	ASB	BKG	31289	ZINC	11.0000
478	ASB	BKG	51088	ZINC	6.0000
479	ASB	BKG	51188	ZINC	11.0000
480	ASB	BKG	61886	ZINC	9.7500
481	ASB	BKG	72286	ZINC	15.5000
482	ASB	BKG	72386	ZINC	2.0000
483	ASB	BKG	80487	ZINC	46.5000
484	ASB	BKG	81388	ZINC	49.0000
485	ASB	BKG	81488	ZINC	24.0000
486	ASB	BKG	102888	ZINC	44.0000

T-Test Data for ASB 6A

OBS	SERIES	WELL	DATE	TESTNAME	VALUE
487	ASB	BKG	110286	ZINC	8.0000
488	ASB	BKG	110386	ZINC	11.3333
489	ASB	BKG	110888	ZINC	12.0000
490	ASB	BKG	121787	ZINC	54.0000
491	ASB	BKG	121987	ZINC	17.0000

Statistical Comparison Results

This Page Intentionally Left Blank.

TTEST PROCEDURE

********** TESTNAME=BARIUM **********

Variable: VALUE

WELL	N	Mean	Std Dev	Std Error	Minimum	Maximum
6A	6	8.66666667	1.03279556	0.42163702	7.00000000	10.00000000
BKG	19	5.78070175	3.06365222	0.70285002	2.00000000	14.00000000

Variances	T	Method	DF	Prob>|T|
Unequal	3.5211	Satterthwaite	22.7	0.0019
		Cochran	.	0.0058
Equal	2.2388		23.0	0.0351

For H0: Variances are equal, F' = 8.80 DF = (18,5) Prob>F' = 0.0244

********** TESTNAME=CALCIUM **********

Variable: VALUE

WELL	N	Mean	Std Dev	Std Error	Minimum	Maximum
6A	3	1436.666667	196.2990915	113.3333333	1210.000000	1550.000000
BKG	4	694.958333	317.6024878	158.8012439	265.000000	983.500000

Variances	T	Method	DF	Prob>|T|
Unequal	3.8018	Satterthwaite	4.9	0.0131
		Cochran	.	0.0433
Equal	3.5241		5.0	0.0168

For H0: Variances are equal, F' = 2.62 DF = (3,2) Prob>F' = 0.5769

********** TESTNAME=CHLORIDE **********

Variable: VALUE

WELL	N	Mean	Std Dev	Std Error	Minimum	Maximum
6A	8	7170.000000	780.3296007	275.8881761	5800.000000	8060.000000
BKG	18	2553.148148	535.2422605	126.1578107	2000.000000	4166.666667

Variances	T	Method	DF	Prob>|T|
Unequal	15.2188	Satterthwaite	10.1	0.0001
		Cochran	.	0.0001
Equal	17.6136		24.0	0.0000

For H0: Variances are equal, F' = 2.13 DF = (7,17) Prob>F' = 0.1935

********** TESTNAME=COPPER **********

Variable: VALUE

WELL	N	Mean	Std Dev	Std Error	Minimum	Maximum
6A	5	5.50000000	5.43139025	2.42899156	2.00000000	15.00000000
BKG	19	6.78947368	3.76871548	0.86460263	2.00000000	15.00000000

Variances	T	Method	DF	Prob>|T|
Unequal	-0.5001	Satterthwaite	5.1	0.6380
		Cochran	.	0.6411
Equal	-0.6225		22.0	0.5400

For H0: Variances are equal, F' = 2.08 DF = (4,18) Prob>F' = 0.2525

********** TESTNAME=GROSS ALPHA **********

Variable: VALUE

WELL	N	Mean	Std Dev	Std Error	Minimum	Maximum
6A	10	.90000000	5.45078995	1.72369113	1.00000000	19.00000000
BKG	14	7.35714286	7.53562965	2.01398174	1.00000000	23.75000000

Variances	T	Method	DF	Prob>|T|
Unequal	0.2048	Satterthwaite	22.0	0.8396
		Cochran	.	0.8415
Equal	0.1939		22.0	0.8480

For H0: Variances are equal, F' = 1.91 DF = (13,9) Prob>F' = 0.3334

********** TESTNAME=IRON **********

Variable: VALUE

WELL	N	Mean	Std Dev	Std Error	Minimum	Maximum
6A	9	62.55555556	38.06856023	12.68952008	2.00000000	117.0000000
BKG	10	36.35000000	15.21420105	4.81115281	19.50000000	76.5000000

Variances	T	Method	DF	Prob>|T|
Unequal	1.9310	Satterthwaite	10.3	0.0816
		Cochran	.	0.0891
Equal	2.0108		17.0	0.0605

For H0: Variances are equal, F' = 6.26 DF = (8,9) Prob>F' = 0.0126

********** TESTNAME=LEAD **********

Variable: VALUE

WELL	N	Mean	Std Dev	Std Error	Minimum	Maximum
6A	13	11.46153846	8.19924168	2.27406048	2.00000000	36.00000000
BKG	20	12.48333333	7.15919643	1.60084499	3.00000000	28.33333333

Variances	T	Method	DF	Prob>|T|
Unequal	-0.3674	Satterthwaite	23.2	0.7166
		Cochran	.	0.7189
Equal	-0.3784		31.0	0.7077

For H0: Variances are equal, F' = 1.31 DF = (12,19) Prob>F' = 0.5783

********** TESTNAME=MANGANESE **********

Variable: VALUE

WELL	N	Mean	Std Dev	Std Error	Minimum	Maximum
6A	10	34.60000000	11.42560477	3.61309347	9.00000000	48.00000000
BKG	14	12.05952381	7.11703360	1.90210724	3.00000000	24.50000000

Variances	T	Method	DF	Prob>|T|
Unequal	5.5203	Satterthwaite	13.9	0.0001
		Cochran	.	0.0003
Equal	5.9636		22.0	0.0000

For H0: Variances are equal, F' = 2.58 DF = (9,13) Prob>F' = 0.1183

********** TESTNAME=NITRATE AS NITROGEN **********

Variable: VALUE

WELL	N	Mean	Std Dev	Std Error	Minimum	Maximum
6A	6	512.000000	299.8132752	122.3982571	250.0000000	1000.000000
BKG	20	1647.566667	538.2189613	120.3494184	880.0000000	3040.000000

Variances	T	Method	DF	Prob>|T|
Unequal	-6.6154	Satterthwaite	15.5	0.0001
		Cochran	.	0.0003
Equal	-4.8983		24.0	0.0001

For H0: Variances are equal, F' = 3.22 DF = (19,5) Prob>F' = 0.1987

********** TESTNAME=NONVOLATILE BETA **********

Variable: VALUE

WELL	N	Mean	Std Dev	Std Error	Minimum	Maximum
6A	8	6.37500000	3.47182537	1.22747563	1.50000000	11.00000000
BKG	14	5.06547619	4.36284068	1.16601822	1.00000000	14.25000000

Variances	T	Method	DF	Prob>|T|
Unequal	0.7735	Satterthwaite	17.6	0.4495
		Cochran	.	0.4592
Equal	0.7254		20.0	0.4766

For H0: Variances are equal, F' = 1.58 DF = (13,7) Prob>F' = 0.5571

********** TESTNAME=PH **********

Variable: VALUE

WELL	N	Mean	Std Dev	Std Error	Minimum	Maximum
6A	21	4.85714286	0.65465367	0.14285714	4.00000000	6.00000000
BKG	22	4.65909091	0.47274184	0.10078890	4.00000000	5.00000000

Variances	T	Method	DF	Prob>|T|
Unequal	1.1328	Satterthwaite	36.3	0.2647
		Cochran	.	0.2705
Equal	1.1413		41.0	0.2604

For H0: Variances are equal, F' = 1.92 DF = (20,21) Prob>F' = 0.1469

********** TESTNAME=SODIUM **********

Variable: VALUE

WELL	N	Mean	Std Dev	Std Error	Minimum	Maximum
6A	13	4174.307692	1102.993834	305.9154480	2680.000000	6900.000000
BKG	20	2689.750000	939.937673	210.1764531	1630.000000	4475.000000

Variances	T	Method	DF	Prob>|T|
Unequal	3.9998	Satterthwaite	22.8	0.0006
		Cochran	.	0.0014
Equal	4.1414		31.0	0.0002

For H0: Variances are equal, F' = 1.38 DF = (12,19) Prob>F' = 0.5162

********** TESTNAME=SPECIFIC CONDUCTANCE **********

Variable: VALUE

WELL	N	Mean	Std Dev	Std Error	Minimum	Maximum
6A	21	47.09523810	6.96351034	1.51956253	37.00000000	62.00000000
BKG	22	30.34090909	6.32340016	1.34815344	19.00000000	43.00000000

Variances	T	Method	DF	Prob>|T|
Unequal	8.2477	Satterthwaite	40.2	0.0001
		Cochran	.	0.0001
Equal	8.2666		41.0	0.0000

For H0: Variances are equal, F' = 1.21 DF = (20,21) Prob>F' = 0.6637

********** TESTNAME=TOTAL DISSOLVED SOLIDS **********

Variable: VALUE

WELL	N	Mean	Std Dev	Std Error	Minimum	Maximum
6A	4	16875.00000	12860.63114	6430.315570	2500.000000	32000.0000
BKG	15	36860.00000	26689.90713	6891.304390	2500.000000	112000.0000

Variances	T	Method	DF	Prob>|T|
Unequal	-2.1203	Satterthwaite	10.8	0.0580
		Cochran	.	0.0904
Equal	-1.4311		17.0	0.1705

For H0: Variances are equal, F' = 4.31 DF = (14,3) Prob>F' = 0.2551

********** TESTNAME=TOTAL RADIUM **********

Variable: VALUE

WELL	N	Mean	Std Dev	Std Error	Minimum	Maximum
6A	10	4.20000000	1.73525534	0.54873592	0.50000000	7.00000000
BKG	20	4.12916667	3.43490798	0.76806877	0.00000000	12.00000000

Variances	T	Method	DF	Prob>|T|
Unequal	0.0750	Satterthwaite	28.0	0.9407
		Cochran	.	0.9413
Equal	0.0611		28.0	0.9518

For H0: Variances are equal, F' = 3.92 DF = (19,9) Prob>F' = 0.0408

********** TESTNAME=ZINC **********

Variable: VALUE

WELL	N	Mean	Std Dev	Std Error	Minimum	Maximum
6A	4	22.25000000	17.42364294	8.71182147	1.00000000	37.00000000
BKG	18	19.65277778	16.61846584	3.91700996	2.00000000	54.00000000

Variances	T	Method	DF	Prob>|T|
Unequal	0.2719	Satterthwaite	4.3	0.7984
		Cochran	.	0.8011
Equal	0.2806		20.0	0.7819

For H0: Variances are equal, F' = 1.10 DF = (3,17) Prob>F' = 0.7531

Background

Groundwater Monitoring Data

This Page Intentionally Left Blank.

Raw Data

This Page Intentionally Left Blank.

Raw Background Data

ASB	BKG	061886	SILVER	LT	2.0000	UGL	EE
ASB	BKG	061886	SILVER	LT	2.0000	UGL	EE
ASB	BKG	061886	ALUMINUM		40.0000	UGL	EE
ASB	BKG	061886	ALUMINUM		30.0000	UGL	EE
ASB	BKG	061886	GROSS ALPHA		10.1000	PCL	RM
ASB	BKG	061886	ARSENIC	LT	2.0000	UGL	EE
ASB	BKG	061886	ARSENIC	LT	2.0000	UGL	EE
ASB	BKG	061886	BARIUM	LT	4.0000	UGL	EE
ASB	BKG	061886	BARIUM	LT	4.0000	UGL	EE
ASB	BKG	061886	NONVOLATILE BETA		7.0000	PCL	RM
ASB	BKG	061886	BROMODICHLOROMETHANE	LT	5.0000	UGL	EE
ASB	BKG	061886	TRICHLOROFLUOROMETHANE	LT	5.0000	UGL	EE
ASB	BKG	061886	CARBON TETRACHLORIDE	LT	5.0000	UGL	EE
ASB	BKG	061886	CADMIUM	LT	1.0000	UGL	EE
ASB	BKG	061886	CADMIUM	LT	1.0000	UGL	EE
ASB	BKG	061886	BROMOFORM	LT	10.0000	UGL	EE
ASB	BKG	061886	CHLOROFORM	LT	5.0000	UGL	EE
ASB	BKG	061886	METHYLENE CHLORIDE	LT	5.0000	UGL	EE
ASB	BKG	061886	BROMOMETHANE	LT	10.0000	UGL	EE
ASB	BKG	061886	CHLOROMETHANE	LT	10.0000	UGL	EE
ASB	BKG	061886	CHLORIDE		4500.0000	UGL	EE
ASB	BKG	061886	CHLOROBENZENE	LT	5.0000	UGL	EE
ASB	BKG	061886	SPECIFIC CONDUCTANCE		30.0000	UMHC	FD
ASB	BKG	061886	SPECIFIC CONDUCTANCE		30.0000	UMHC	FD
ASB	BKG	061886	SPECIFIC CONDUCTANCE		34.2000	UMHC	EE
ASB	BKG	061886	SPECIFIC CONDUCTANCE		33.4000	UMHC	EE
ASB	BKG	061886	SPECIFIC CONDUCTANCE		38.2000	UMHC	EE
ASB	BKG	061886	CHROMIUM	LT	4.0000	UGL	EE
ASB	BKG	061886	CHROMIUM	LT	4.0000	UGL	EE
ASB	BKG	061886	COPPER		7.0000	UGL	EE
ASB	BKG	061886	COPPER		8.0000	UGL	EE
ASB	BKG	061886	CYANIDE	LT	5.0000	UGL	EE
ASB	BKG	061886	CYANIDE	LT	5.0000	UGL	EE
ASB	BKG	061886	CHLOROETHENE	LT	10.0000	UGL	EE
ASB	BKG	061886	CHLOROETHANE	LT	10.0000	UGL	EE
ASB	BKG	061886	BENZENE	LT	5.0000	UGL	EE
ASB	BKG	061886	DIBROMOCHLOROMETHANE	LT	5.0000	UGL	EE
ASB	BKG	061886	ENDRIN	LT	0.0400	UGL	EE
ASB	BKG	061886	ETHYLBENZENE	LT	5.0000	UGL	EE
ASB	BKG	061886	FLUORIDE		180.0000	UGL	EE
ASB	BKG	061886	IRON		75.0000	UGL	EE
ASB	BKG	061886	IRON		45.0000	UGL	EE
ASB	BKG	061886	MERCURY	LT	0.2000	UGL	EE
ASB	BKG	061886	MERCURY	LT	0.2000	UGL	EE
ASB	BKG	061886	LINDANE	LT	1.0000	UGL	EE
ASB	BKG	061886	TOLUENE-D8		44.0000	UGL	EE
ASB	BKG	061886	TOLUENE	LT	5.0000	UGL	EE
ASB	BKG	061886	METHOXYCHLOR	LT	20.0000	UGL	EE
ASB	BKG	061886	MANGANESE		5.0000	UGL	EE
ASB	BKG	061886	MANGANESE		5.0000	UGL	EE
ASB	BKG	061886	SODIUM		3690.0000	UGL	EE
ASB	BKG	061886	SODIUM		3580.0000	UGL	EE
ASB	BKG	061886	NICKEL	LT	4.0000	UGL	EE
ASB	BKG	061886	NICKEL	LT	4.0000	UGL	EE
ASB	BKG	061886	NITRATE AS NITROGEN		2200.0000	UGL	EE
ASB	BKG	061886	NITRATE AS NITROGEN		2200.0000	UGL	EE
ASB	BKG	061886	LEAD		34.0000	UGL	EE
ASB	BKG	061886	LEAD		30.0000	UGL	EE
ASB	BKG	061886	P-BROMOFLUOROBENZENE		50.0000	UGL	EE
ASB	BKG	061886	PH		5.2000	PH	FD
ASB	BKG	061886	PH		5.2000	PH	FD
ASB	BKG	061886	PH		4.5300	PH	EE
ASB	BKG	061886	PH		4.6000	PH	EE
ASB	BKG	061886	PH		4.5700	PH	EE

ASB	BKG	061886	PHENOLS	LT	2.0000	UGL	EE
ASB	BKG	061886	SELENIUM	LT	2.0000	UGL	EE
ASB	BKG	061886	SELENIUM	LT	2.0000	UGL	EE
ASB	BKG	061886	SILVEX	LT	2.0000	UGL	EE
ASB	BKG	061886	SULFATE	LT	5000.0000	UGL	EE
ASB	BKG	061886	1,1,2,2-TETRACHLOROETHANE	LT	10.0000	UGL	EE
ASB	BKG	061886	TETRACHLOROETHYLENE	LT	5.0000	UGL	EE
ASB	BKG	061886	TOTAL COLIFORM	LT	1.0000		EC
ASB	BKG	061886	TOTAL ORGANIC CARBON	LT	1000.0000	UGL	EE
ASB	BKG	061886	TOTAL ORGANIC CARBON	LT	1000.0000	UGL	EE
ASB	BKG	061886	TOTAL ORGANIC CARBON	LT	1000.0000	UGL	EE
ASB	BKG	061886	TOTAL ORGANIC CARBON	LT	1000.0000	UGL	EE
ASB	BKG	061886	TOTAL RADIUM		8.5000	PCL	RM
ASB	BKG	061886	TOTAL ORGANIC HALOGENS	LT	5.0000	UGL	EE
ASB	BKG	061886	TOTAL ORGANIC HALOGENS	LT	5.0000	UGL	EE
ASB	BKG	061886	TOTAL ORGANIC HALOGENS	LT	5.0000	UGL	EE
ASB	BKG	061886	TOTAL ORGANIC HALOGENS	LT	5.0000	UGL	EE
ASB	BKG	061886	TOTAL PHOSPHATES		14.0000	UGL	EE
ASB	BKG	061886	TRICHLOROETHYLENE	LT	5.0000	UGL	EE
ASB	BKG	061886	TURBIDITY		0.7000	TU	EE
ASB	BKG	061886	TURBIDITY		0.6500	TU	EE
ASB	BKG	061886	TOXAPHENE	LT	1.0000	UGL	EE
ASB	BKG	061886	TRANS-1,2-DICHLOROETHENE	LT	5.0000	UGL	EE
ASB	BKG	061886	URANIUM	LT	100.0000	UGL	EE
ASB	BKG	061886	URANIUM	LT	100.0000	UGL	EE
ASB	BKG	061886	1,1-DICHLOROETHYLENE	LT	5.0000	UGL	EE
ASB	BKG	061886	1,1-DICHLOROETHANE	LT	5.0000	UGL	EE
ASB	BKG	061886	1,1,1-TRICHLOROETHANE	LT	5.0000	UGL	EE
ASB	BKG	061886	1,1,2-TRICHLOROETHANE	LT	5.0000	UGL	EE
ASB	BKG	061886	1,2-DICHLOROETHANE-D4		48.0000	UGL	EE
ASB	BKG	061886	1,2-DICHLOROETHANE	LT	1.0000	UGL	EE
ASB	BKG	061886	1,2-DICHLOROPROPANE	LT	10.0000	UGL	EE
ASB	BKG	061886	CIS-1,3-DICHLOROPROPENE	LT	5.0000	UGL	EE
ASB	BKG	061886	TRANS-1,3-DICHLOROPROPENE	LT	5.0000	UGL	EE
ASB	BKG	061886	2-CHLOROETHYLVINYL ETHER	LT	10.0000	UGL	EE
ASB	BKG	061886	2,4-DICHLOROPHENOXYACETIC ACID	LT	20.0000	UGL	EE
ASB	BKG	061886	ZINC		10.0000	UGL	EE
ASB	BKG	061886	ZINC		11.0000	UGL	EE
ASB	BKG	072386	SILVER	LT	2.0000	UGL	EE
ASB	BKG	072386	SILVER	LT	2.0000	UGL	EE
ASB	BKG	072386	SILVER	LT	2.0000	UGL	EE
ASB	BKG	072386	ALUMINUM		40.0000	UGL	EE
ASB	BKG	072386	ALUMINUM		48.0000	UGL	EE
ASB	BKG	072386	ALUMINUM		47.0000	UGL	EE
ASB	BKG	072386	GROSS ALPHA		6.9000	PCL	RM
ASB	BKG	072386	BARIUM		7.0000	UGL	EE
ASB	BKG	072386	BARIUM		7.0000	UGL	EE
ASB	BKG	072386	BARIUM		7.0000	UGL	EE
ASB	BKG	072386	NONVOLATILE BETA		4.3000	PCL	RM
ASB	BKG	072386	BROMODICHLOROMETHANE	LT	5.0000	UGL	EE
ASB	BKG	072386	TRICHLOROFLUOROMETHANE	LT	5.0000	UGL	EE
ASB	BKG	072386	CARBON TETRACHLORIDE	LT	5.0000	UGL	EE
ASB	BKG	072386	CADMIUM	LT	1.0000	UGL	EE
ASB	BKG	072386	CADMIUM	LT	1.0000	UGL	EE
ASB	BKG	072386	CADMIUM	LT	1.0000	UGL	EE
ASB	BKG	072386	BROMOFORM	LT	10.0000	UGL	EE
ASB	BKG	072386	CHLOROFORM	LT	5.0000	UGL	EE
ASB	BKG	072386	METHYLENE CHLORIDE		3.0000	UGL	EE
ASB	BKG	072386	BROMOMETHANE	LT	10.0000	UGL	EE
ASB	BKG	072386	CHLOROMETHANE	LT	10.0000	UGL	EE
ASB	BKG	072386	CHLORIDE		2270.0000	UGL	EE
ASB	BKG	072386	CHLOROBENZENE	LT	5.0000	UGL	EE
ASB	BKG	072386	SPECIFIC CONDUCTANCE		40.0000	UMHC	FD
ASB	BKG	072386	SPECIFIC CONDUCTANCE		40.0000	UMHC	FD

Raw Background Data

ASB	BKG	072386	SPECIFIC CONDUCTANCE		35.4100	UMHC	EE
ASB	BKG	072386	SPECIFIC CONDUCTANCE		34.7200	UMHC	EE
ASB	BKG	072386	CHROMIUM	LT	4.0000	UGL	EE
ASB	BKG	072386	CHROMIUM	LT	4.0000	UGL	EE
ASB	BKG	072386	CHROMIUM	LT	4.0000	UGL	EE
ASB	BKG	072386	COPPER		5.0000	UGL	EE
ASB	BKG	072386	COPPER	LT	4.0000	UGL	EE
ASB	BKG	072386	COPPER	LT	4.0000	UGL	EE
ASB	BKG	072386	CYANIDE	LT	5.0000	UGL	EE
ASB	BKG	072386	CHLOROETHENE	LT	10.0000	UGL	EE
ASB	BKG	072386	CHLOROETHANE	LT	10.0000	UGL	EE
ASB	BKG	072386	BENZENE	LT	5.0000	UGL	EE
ASB	BKG	072386	DIBROMOCHLOROMETHANE	LT	5.0000	UGL	EE
ASB	BKG	072386	ETHYLBENZENE	LT	5.0000	UGL	EE
ASB	BKG	072386	FLUORIDE	LT	100.0000	UGL	EE
ASB	BKG	072386	IRON		22.0000	UGL	EE
ASB	BKG	072386	IRON		39.0000	UGL	EE
ASB	BKG	072386	IRON		33.0000	UGL	EE
ASB	BKG	072386	MERCURY	LT	0.2000	UGL	EE
ASB	BKG	072386	MERCURY	LT	0.2000	UGL	EE
ASB	BKG	072386	TOLUENE-D8		50.0000	UGL	EE
ASB	BKG	072386	TOLUENE	LT	5.0000	UGL	EE
ASB	BKG	072386	MANGANESE		5.0000	UGL	EE
ASB	BKG	072386	MANGANESE		5.0000	UGL	EE
ASB	BKG	072386	MANGANESE		5.0000	UGL	EE
ASB	BKG	072386	SODIUM		4310.0000	UGL	EE
ASB	BKG	072386	SODIUM		4360.0000	UGL	EE
ASB	BKG	072386	SODIUM		4320.0000	UGL	EE
ASB	BKG	072386	NICKEL	LT	4.0000	UGL	EE
ASB	BKG	072386	NICKEL	LT	4.0000	UGL	EE
ASB	BKG	072386	NICKEL	LT	4.0000	UGL	EE
ASB	BKG	072386	NITRATE AS NITROGEN		2070.0000	UGL	EE
ASB	BKG	072386	LEAD		22.0000	UGL	EE
ASB	BKG	072386	LEAD		32.0000	UGL	EE
ASB	BKG	072386	LEAD		31.0000	UGL	EE
ASB	BKG	072386	P-BROMOFLUOROBENZENE		56.0000	UGL	EE
ASB	BKG	072386	PH		4.7000	PH	FD
ASB	BKG	072386	PH		4.7000	PH	FD
ASB	BKG	072386	PH		4.7800	PH	EE
ASB	BKG	072386	PH		4.8100	PH	EE
ASB	BKG	072386	PHENOLS	LT	2.0000	UGL	EE
ASB	BKG	072386	SULFATE	LT	5000.0000	UGL	EE
ASB	BKG	072386	1,1,2,2-TETRACHLOROETHANE	LT	10.0000	UGL	EE
ASB	BKG	072386	TETRACHLOROETHYLENE	LT	5.0000	UGL	EE
ASB	BKG	072386	TOTAL ORGANIC CARBON	LT	1000.0000	UGL	EE
ASB	BKG	072386	TOTAL ORGANIC CARBON	LT	1000.0000	UGL	EE
ASB	BKG	072386	TOTAL ORGANIC CARBON	LT	1000.0000	UGL	EE
ASB	BKG	072386	TOTAL ORGANIC CARBON	LT	1000.0000	UGL	EE
ASB	BKG	072386	TOTAL RADIUM		8.8000	PCL	RM
ASB	BKG	072386	TOTAL ORGANIC HALOGENS	LT	5.0000	UGL	EE
ASB	BKG	072386	TOTAL ORGANIC HALOGENS	LT	5.0000	UGL	EE
ASB	BKG	072386	TOTAL ORGANIC HALOGENS	LT	5.0000	UGL	EE
ASB	BKG	072386	TOTAL ORGANIC HALOGENS	LT	5.0000	UGL	EE
ASB	BKG	072386	TOTAL PHOSPHATES		39.0000	UGL	EE
ASB	BKG	072386	TOTAL PHOSPHATES		45.0000	UGL	EE
ASB	BKG	072386	TRICHLOROETHYLENE	LT	5.0000	UGL	EE
ASB	BKG	072386	TRANS-1,2-DICHLOROETHENE	LT	5.0000	UGL	EE
ASB	BKG	072386	URANIUM	LT	50.0000	UGL	EE
ASB	BKG	072386	URANIUM	LT	50.0000	UGL	EE
ASB	BKG	072386	URANIUM	LT	50.0000	UGL	EE
ASB	BKG	072386	1,1-DICHLOROETHYLENE	LT	5.0000	UGL	EE
ASB	BKG	072386	1,1-DICHLOROETHANE	LT	5.0000	UGL	EE
ASB	BKG	072386	1,1,1-TRICHLOROETHANE	LT	5.0000	UGL	EE
ASB	BKG	072386	1,1,2-TRICHLOROETHANE	LT	5.0000	UGL	EE

ASB	BKG	072386	1,2-DICHLOROETHANE-D4		46.0000	UGL	EE
ASB	BKG	072386	1,2-DICHLOROETHANE	LT	1.0000	UGL	EE
ASB	BKG	072386	1,2-DICHLOROPROPANE	LT	10.0000	UGL	EE
ASB	BKG	072386	CIS-1,3-DICHLOROPROPENE	LT	5.0000	UGL	EE
ASB	BKG	072386	TRANS-1,3-DICHLOROPROPENE	LT	5.0000	UGL	EE
ASB	BKG	072386	2-CHLOROETHYLVINYL ETHER	LT	10.0000	UGL	EE
ASB	BKG	072386	ZINC		3.0000	UGL	EE
ASB	BKG	072386	ZINC	LT	2.0000	UGL	EE
ASB	BKG	072386	ZINC		2.0000	UGL	EE
ASB	BKG	110386	SILVER	LT	2.0000	UGL	EE
ASB	BKG	110386	SILVER	LT	2.0000	UGL	EE
ASB	BKG	110386	SILVER	LT	2.0000	UGL	EE
ASB	BKG	110386	ALUMINUM		32.0000	UGL	EE
ASB	BKG	110386	ALUMINUM		41.0000	UGL	EE
ASB	BKG	110386	ALUMINUM		40.0000	UGL	EE
ASB	BKG	110386	GROSS ALPHA		5.7000	PCL	RM
ASB	BKG	110386	GROSS ALPHA		8.5000	PCL	RM
ASB	BKG	110386	BARIUM		7.0000	UGL	EE
ASB	BKG	110386	BARIUM		7.0000	UGL	EE
ASB	BKG	110386	BARIUM		7.0000	UGL	EE
ASB	BKG	110386	BERYLLIUM	LT	1.0000	UGL	EE
ASB	BKG	110386	BERYLLIUM	LT	1.0000	UGL	EE
ASB	BKG	110386	BERYLLIUM	LT	1.0000	UGL	EE
ASB	BKG	110386	NONVOLATILE BETA		4.8000	PCL	RM
ASB	BKG	110386	NONVOLATILE BETA		6.1000	PCL	RM
ASB	BKG	110386	BROMODICHLOROMETHANE	LT	5.0000	UGL	EE
ASB	BKG	110386	CALCIUM		986.0000	UGL	EE
ASB	BKG	110386	CALCIUM		324.0000	UGL	EE
ASB	BKG	110386	TRICHLOROFLUOROMETHANE	LT	5.0000	UGL	EE
ASB	BKG	110386	CARBON TETRACHLORIDE	LT	5.0000	UGL	EE
ASB	BKG	110386	CADMIUM	LT	2.0000	UGL	EE
ASB	BKG	110386	CADMIUM	LT	2.0000	UGL	EE
ASB	BKG	110386	CADMIUM	LT	2.0000	UGL	EE
ASB	BKG	110386	BROMOFORM	LT	10.0000	UGL	EE
ASB	BKG	110386	CHLOROFORM	LT	5.0000	UGL	EE
ASB	BKG	110386	BROMOMETHANE	LT	10.0000	UGL	EE
ASB	BKG	110386	CHLOROMETHANE	LT	10.0000	UGL	EE
ASB	BKG	110386	CHLORIDE		2800.0000	UGL	EE
ASB	BKG	110386	CHLOROBENZENE	LT	5.0000	UGL	EE
ASB	BKG	110386	SPECIFIC CONDUCTANCE		43.0000	UMHC	FD
ASB	BKG	110386	SPECIFIC CONDUCTANCE		43.0000	UMHC	FD
ASB	BKG	110386	CHROMIUM	LT	4.0000	UGL	EE
ASB	BKG	110386	CHROMIUM	LT	4.0000	UGL	EE
ASB	BKG	110386	CHROMIUM	LT	4.0000	UGL	EE
ASB	BKG	110386	COPPER		12.0000	UGL	EE
ASB	BKG	110386	COPPER		8.0000	UGL	EE
ASB	BKG	110386	COPPER		7.0000	UGL	EE
ASB	BKG	110386	CYANIDE	LT	5.0000	UGL	EE
ASB	BKG	110386	CHLOROETHENE	LT	10.0000	UGL	EE
ASB	BKG	110386	CHLOROETHANE	LT	10.0000	UGL	EE
ASB	BKG	110386	BENZENE	LT	5.0000	UGL	EE
ASB	BKG	110386	DIBROMOCHLOROMETHANE	LT	5.0000	UGL	EE
ASB	BKG	110386	ETHYLBENZENE	LT	5.0000	UGL	EE
ASB	BKG	110386	FLUORIDE	LT	100.0000	UGL	EE
ASB	BKG	110386	IRON		33.0000	UGL	EE
ASB	BKG	110386	IRON		24.0000	UGL	EE
ASB	BKG	110386	IRON		26.0000	UGL	EE
ASB	BKG	110386	MERCURY	LT	0.2000	UGL	EE
ASB	BKG	110386	MERCURY	LT	0.2000	UGL	EE
ASB	BKG	110386	TOLUENE-D8		101.8000	PER	EE
ASB	BKG	110386	TOLUENE	LT	5.0000	UGL	EE
ASB	BKG	110386	MAGNESIUM		430.0000	UGL	EE
ASB	BKG	110386	MAGNESIUM		440.0000	UGL	EE
ASB	BKG	110386	MAGNESIUM		460.0000	UGL	EE

Raw Background Data

ASB	BKG	110386	MANGANESE		4.0000	UGL	EE
ASB	BKG	110386	MANGANESE		7.0000	UGL	EE
ASB	BKG	110386	MANGANESE		4.0000	UGL	EE
ASB	BKG	110386	SODIUM		3910.0000	UGL	EE
ASB	BKG	110386	SODIUM		3880.0000	UGL	EE
ASB	BKG	110386	SODIUM		3850.0000	UGL	EE
ASB	BKG	110386	NICKEL	LT	4.0000	UGL	EE
ASB	BKG	110386	NICKEL	LT	4.0000	UGL	EE
ASB	BKG	110386	NICKEL	LT	4.0000	UGL	EE
ASB	BKG	110386	NITRATE AS NITROGEN		2140.0000	UGL	EE
ASB	BKG	110386	LEAD		17.0000	UGL	EE
ASB	BKG	110386	LEAD		17.0000	UGL	EE
ASB	BKG	110386	LEAD		19.0000	UGL	EE
ASB	BKG	110386	PH		3.7000	PH	FD
ASB	BKG	110386	PH		3.7000	PH	FD
ASB	BKG	110386	PHENOLS	LT	2.0000	UGL	EE
ASB	BKG	110386	ANTIMONY	LT	3.0000	UGL	EE
ASB	BKG	110386	ANTIMONY	LT	3.0000	UGL	EE
ASB	BKG	110386	SULFATE	LT	3000.0000	UGL	EE
ASB	BKG	110386	1,1,2,2-TETRACHLOROETHANE	LT	10.0000	UGL	EE
ASB	BKG	110386	TETRACHLOROETHYLENE	LT	5.0000	UGL	EE
ASB	BKG	110386	TOTAL ORGANIC CARBON		1200.0000	UGL	EE
ASB	BKG	110386	TOTAL ORGANIC CARBON	LT	1000.0000	UGL	EE
ASB	BKG	110386	TOTAL ORGANIC CARBON	LT	1000.0000	UGL	EE
ASB	BKG	110386	TOTAL RADIUM		8.3000	PCL	RM
ASB	BKG	110386	TOTAL RADIUM		7.3000	PCL	RM
ASB	BKG	110386	TOTAL ORGANIC HALOGENS	LT	5.0000	UGL	EE
ASB	BKG	110386	TOTAL ORGANIC HALOGENS	LT	5.0000	UGL	EE
ASB	BKG	110386	TOTAL ORGANIC HALOGENS	LT	5.0000	UGL	EE
ASB	BKG	110386	TOTAL ORGANIC HALOGENS	LT	5.0000	UGL	EE
ASB	BKG	110386	TOTAL PHOSPHATES		37.0000	UGL	EE
ASB	BKG	110386	TRICHLOROETHYLENE	LT	5.0000	UGL	EE
ASB	BKG	110386	TRANS-1,2-DICHLOROETHENE	LT	5.0000	UGL	EE
ASB	BKG	110386	1,1-DICHLOROETHYLENE	LT	5.0000	UGL	EE
ASB	BKG	110386	1,1-DICHLOROETHANE	LT	5.0000	UGL	EE
ASB	BKG	110386	1,1,1-TRICHLOROETHANE	LT	5.0000	UGL	EE
ASB	BKG	110386	1,1,2-TRICHLOROETHANE	LT	5.0000	UGL	EE
ASB	BKG	110386	1,2-DICHLOROETHANE-D4		105.4000	PER	EE
ASB	BKG	110386	1,2-DICHLOROETHANE	LT	1.0000	UGL	EE
ASB	BKG	110386	1,2-DICHLOROPROPANE	LT	10.0000	UGL	EE
ASB	BKG	110386	CIS-1,3-DICHLOROPROPENE	LT	5.0000	UGL	EE
ASB	BKG	110386	TRANS-1,3-DICHLOROPROPENE	LT	5.0000	UGL	EE
ASB	BKG	110386	2-CHLOROETHYLVINYL ETHER	LT	10.0000	UGL	EE
ASB	BKG	110386	ZINC		14.0000	UGL	EE
ASB	BKG	110386	ZINC		6.0000	UGL	EE
ASB	BKG	110386	ZINC		14.0000	UGL	EE
ASB	BKG	012687	SILVER	LT	2.0000	UGL	EE
ASB	BKG	012687	SILVER	LT	2.0000	UGL	EE
ASB	BKG	012687	ALUMINUM		47.0000	UGL	EE
ASB	BKG	012687	ALUMINUM		39.0000	UGL	EE
ASB	BKG	012687	GROSS ALPHA		6.6000	PCL	RM
ASB	BKG	012687	ARSENIC	LT	2.0000	UGL	EE
ASB	BKG	012687	ARSENIC	LT	2.0000	UGL	EE
ASB	BKG	012687	BARIUM		7.0000	UGL	EE
ASB	BKG	012687	BARIUM		8.0000	UGL	EE
ASB	BKG	012687	BERYLLIUM	LT	1.0000	UGL	EE
ASB	BKG	012687	BERYLLIUM	LT	1.0000	UGL	EE
ASB	BKG	012687	NONVOLATILE BETA		5.4000	PCL	RM
ASB	BKG	012687	CALCIUM		290.0000	UGL	EE
ASB	BKG	012687	CALCIUM		240.0000	UGL	EE
ASB	BKG	012687	CARBON TETRACHLORIDE	LT	1.0000	UGL	EE
ASB	BKG	012687	CADMIUM	LT	2.0000	UGL	EE
ASB	BKG	012687	CADMIUM	LT	2.0000	UGL	EE
ASB	BKG	012687	CHLOROFORM	LT	1.0000	UGL	EE

Raw Background Data

ASB	BKG	012687	CHLORIDE		2500.0000	UGL	EE
ASB	BKG	012687	SPECIFIC CONDUCTANCE		19.0000	UMHC	FD
ASB	BKG	012687	SPECIFIC CONDUCTANCE		19.0000	UMHC	FD
ASB	BKG	012687	SPECIFIC CONDUCTANCE		36.5000	UMHC	EE
ASB	BKG	012687	SPECIFIC CONDUCTANCE		39.4000	UMHC	EE
ASB	BKG	012687	SPECIFIC CONDUCTANCE		36.9000	UMHC	EE
ASB	BKG	012687	SPECIFIC CONDUCTANCE		35.5000	UMHC	EE
ASB	BKG	012687	CHROMIUM	LT	4.0000	UGL	EE
ASB	BKG	012687	CHROMIUM	LT	4.0000	UGL	EE
ASB	BKG	012687	COPPER		7.0000	UGL	EE
ASB	BKG	012687	COPPER	LT	4.0000	UGL	EE
ASB	BKG	012687	CYANIDE	LT	5.0000	UGL	EE
ASB	BKG	012687	ENDRIN	LT	0.1000	UGL	EE
ASB	BKG	012687	FLUORIDE	LT	100.0000	UGL	EE
ASB	BKG	012687	FLUORIDE	LT	100.0000	UGL	EE
ASB	BKG	012687	IRON		19.0000	UGL	EE
ASB	BKG	012687	IRON		20.0000	UGL	EE
ASB	BKG	012687	MERCURY	LT	0.2000	UGL	EE
ASB	BKG	012687	MERCURY	LT	0.2000	UGL	EE
ASB	BKG	012687	MERCURY	LT	0.2000	UGL	EE
ASB	BKG	012687	POTASSIUM		370.0000	UGL	EE
ASB	BKG	012687	POTASSIUM		449.0000	UGL	EE
ASB	BKG	012687	LINDANE	LT	0.0500	UGL	EE
ASB	BKG	012687	METHOXYCHLOR	LT	0.5000	UGL	EE
ASB	BKG	012687	MAGNESIUM		442.0000	UGL	EE
ASB	BKG	012687	MAGNESIUM		428.0000	UGL	EE
ASB	BKG	012687	MANGANESE		4.0000	UGL	EE
ASB	BKG	012687	MANGANESE		3.0000	UGL	EE
ASB	BKG	012687	SODIUM		4590.0000	UGL	EE
ASB	BKG	012687	SODIUM		4360.0000	UGL	EE
ASB	BKG	012687	NICKEL	LT	4.0000	UGL	EE
ASB	BKG	012687	NICKEL	LT	4.0000	UGL	EE
ASB	BKG	012687	NITRATE AS NITROGEN		2180.0000	UGL	EE
ASB	BKG	012687	LEAD		11.0000	UGL	EE
ASB	BKG	012687	LEAD		12.0000	UGL	EE
ASB	BKG	012687	PH		5.0000	PH	FD
ASB	BKG	012687	PH		5.0000	PH	FD
ASB	BKG	012687	PH		4.3100	PH	EE
ASB	BKG	012687	PH		4.4200	PH	EE
ASB	BKG	012687	PH		4.6000	PH	EE
ASB	BKG	012687	PH		4.6500	PH	EE
ASB	BKG	012687	PHENOLS	LT	2.0000	UGL	EE
ASB	BKG	012687	ANTIMONY	LT	3.0000	UGL	EE
ASB	BKG	012687	ANTIMONY	LT	3.0000	UGL	EE
ASB	BKG	012687	SELENIUM	LT	2.0000	UGL	EE
ASB	BKG	012687	SELENIUM	LT	2.0000	UGL	EE
ASB	BKG	012687	SILICA		3320.0000	UGL	EE
ASB	BKG	012687	SILVEX	LT	2.0000	UGL	EE
ASB	BKG	012687	SULFATE		3000.0000	UGL	EE
ASB	BKG	012687	TETRACHLOROETHYLENE	LT	1.0000	UGL	EE
ASB	BKG	012687	TOTAL DISSOLVED SOLIDS		22000.0000	UGL	EE
ASB	BKG	012687	TOTAL ORGANIC CARBON	LT	1000.0000	UGL	EE
ASB	BKG	012687	TOTAL ORGANIC CARBON	LT	1000.0000	UGL	EE
ASB	BKG	012687	TOTAL ORGANIC CARBON	LT	1000.0000	UGL	EE
ASB	BKG	012687	TOTAL ORGANIC CARBON	LT	1000.0000	UGL	EE
ASB	BKG	012687	TOTAL ORGANIC CARBON		2000.0000	UGL	EE
ASB	BKG	012687	TOTAL RADIUM		6.9000	PCL	RM
ASB	BKG	012687	TOTAL ORGANIC HALOGENS	LT	5.0000	UGL	EE
ASB	BKG	012687	TOTAL ORGANIC HALOGENS	LT	5.0000	UGL	EE
ASB	BKG	012687	TOTAL ORGANIC HALOGENS	LT	5.0000	UGL	EE
ASB	BKG	012687	TOTAL ORGANIC HALOGENS	LT	5.0000	UGL	EE
ASB	BKG	012687	TOTAL PHOSPHATES		30.0000	UGL	EE
ASB	BKG	012687	TRICHLOROETHYLENE	LT	1.0000	UGL	EE
ASB	BKG	012687	TRITIUM		1.4000	PCML	RM

ASB	BKG	012687	TOXAPHENE	LT	1.0000	UGL	EE
ASB	BKG	012687	URANIUM	LT	100.0000	UGL	EE
ASB	BKG	012687	URANIUM	LT	100.0000	UGL	EE
ASB	BKG	012687	1,1,1-TRICHLOROETHANE	LT	1.0000	UGL	EE
ASB	BKG	012687	2,4-DICHLOROPHENOXYACETIC ACID	LT	20.0000	UGL	EE
ASB	BKG	012687	ZINC		12.0000	UGL	EE
ASB	BKG	012687	ZINC		2.0000	UGL	EE
ASB	BKG	040687	ALUMINUM		42.0000	UGL	EE
ASB	BKG	040687	GROSS ALPHA		9.0000	PCL	RM
ASB	BKG	040687	ARSENIC	LT	2.0000	UGL	EE
ASB	BKG	040687	NONVOLATILE BETA		7.1000	PCL	RM
ASB	BKG	040687	BROMODICHLOROMETHANE	LT	5.0000	UGL	EE
ASB	BKG	040687	TRICHLOROFLUOROMETHANE	LT	5.0000	UGL	EE
ASB	BKG	040687	CARBON TETRACHLORIDE	LT	1.0000	UGL	EE
ASB	BKG	040687	CARBON TETRACHLORIDE	LT	5.0000	UGL	EE
ASB	BKG	040687	BROMOFORM	LT	10.0000	UGL	EE
ASB	BKG	040687	CHLOROFORM	LT	1.0000	UGL	EE
ASB	BKG	040687	CHLOROFORM	LT	5.0000	UGL	EE
ASB	BKG	040687	BROMOMETHANE	LT	10.0000	UGL	EE
ASB	BKG	040687	CHLOROMETHANE	LT	10.0000	UGL	EE
ASB	BKG	040687	CHLOROBENZENE	LT	5.0000	UGL	EE
ASB	BKG	040687	SPECIFIC CONDUCTANCE		38.0000	UMHC	FD
ASB	BKG	040687	SPECIFIC CONDUCTANCE		34.3000	UMHC	EE
ASB	BKG	040687	SPECIFIC CONDUCTANCE		34.4000	UMHC	EE
ASB	BKG	040687	SPECIFIC CONDUCTANCE		34.9000	UMHC	EE
ASB	BKG	040687	CHLOROETHENE	LT	10.0000	UGL	EE
ASB	BKG	040687	CHLOROETHANE	LT	10.0000	UGL	EE
ASB	BKG	040687	BENZENE	LT	5.0000	UGL	EE
ASB	BKG	040687	DIBROMOCHLOROMETHANE	LT	5.0000	UGL	EE
ASB	BKG	040687	ENDRIN	LT	0.1000	UGL	EE
ASB	BKG	040687	ETHYLBENZENE	LT	5.0000	UGL	EE
ASB	BKG	040687	FECAL COLIFORM	LT	2.0000		DA
ASB	BKG	040687	LINDANE	LT	0.0500	UGL	EE
ASB	BKG	040687	TOLUENE-D8		109.0000	PER	EE
ASB	BKG	040687	TOLUENE	LT	5.0000	UGL	EE
ASB	BKG	040687	METHOXYCHLOR	LT	0.5000	UGL	EE
ASB	BKG	040687	SODIUM		3930.0000	UGL	EE
ASB	BKG	040687	NICKEL	LT	4.0000	UGL	EE
ASB	BKG	040687	NITRATE AS NITROGEN		2180.0000	UGL	EE
ASB	BKG	040687	LEAD		10.0000	UGL	EE
ASB	BKG	040687	P-BROMOFLUOROBENZENE		97.0000	PER	EE
ASB	BKG	040687	PH		4.4000	PH	FD
ASB	BKG	040687	PH		4.8000	PH	EE
ASB	BKG	040687	PH		4.8700	PH	EE
ASB	BKG	040687	PH		4.8100	PH	EE
ASB	BKG	040687	SELENIUM	LT	2.0000	UGL	EE
ASB	BKG	040687	SILVEX	LT	0.0900	UGL	EE
ASB	BKG	040687	SILVEX	LT	0.0900	UGL	EE
ASB	BKG	040687	1,1,2,2-TETRACHLOROETHANE	LT	10.0000	UGL	EE
ASB	BKG	040687	TETRACHLOROETHYLENE	LT	1.0000	UGL	EE
ASB	BKG	040687	TETRACHLOROETHYLENE	LT	5.0000	UGL	EE
ASB	BKG	040687	TOTAL DISSOLVED SOLIDS		20000.0000	UGL	EE
ASB	BKG	040687	TOTAL DISSOLVED SOLIDS		32000.0000	UGL	EE
ASB	BKG	040687	TOTAL DISSOLVED SOLIDS		36000.0000	UGL	EE
ASB	BKG	040687	TOTAL DISSOLVED SOLIDS		42000.0000	UGL	EE
ASB	BKG	040687	TOTAL DISSOLVED SOLIDS		38000.0000	UGL	EE
ASB	BKG	040687	TOTAL ORGANIC CARBON	LT	1000.0000	UGL	EE
ASB	BKG	040687	TOTAL RADIUM		8.1000	PCL	RM
ASB	BKG	040687	TOTAL ORGANIC HALOGENS	LT	5.0000	UGL	EE
ASB	BKG	040687	TOTAL PHOSPHATES	LT	20.0000	UGL	EE
ASB	BKG	040687	TRICHLOROETHYLENE	LT	1.0000	UGL	EE
ASB	BKG	040687	TRICHLOROETHYLENE	LT	5.0000	UGL	EE
ASB	BKG	040687	TURBIDITY	LT	0.1000	TU	EE
ASB	BKG	040687	TURBIDITY	LT	0.1000	TU	EE

Raw Background Data

ASB	BKG	040687	TURBIDITY		0.1100	TU	EE
ASB	BKG	040687	TURBIDITY		0.1100	TU	EE
ASB	BKG	040687	TURBIDITY		0.1200	TU	EE
ASB	BKG	040687	TOXAPHENE	LT	1.0000	UGL	EE
ASB	BKG	040687	TRANS-1,2-DICHLOROETHENE	LT	5.0000	UGL	EE
ASB	BKG	040687	URANIUM	LT	100.0000	UGL	EE
ASB	BKG	040687	1,1-DICHLOROETHYLENE	LT	5.0000	UGL	EE
ASB	BKG	040687	1,1-DICHLOROETHANE	LT	5.0000	UGL	EE
ASB	BKG	040687	1,1,1-TRICHLOROETHANE	LT	1.0000	UGL	EE
ASB	BKG	040687	1,1,1-TRICHLOROETHANE	LT	5.0000	UGL	EE
ASB	BKG	040687	1,1,2-TRICHLOROETHANE	LT	5.0000	UGL	EE
ASB	BKG	040687	1,2-DICHLOROETHANE-D4		98.0000	PER	EE
ASB	BKG	040687	1,2-DICHLOROETHANE	LT	1.0000	UGL	EE
ASB	BKG	040687	1,2-DICHLOROPROPANE	LT	10.0000	UGL	EE
ASB	BKG	040687	CIS-1,3-DICHLOROPROPENE	LT	5.0000	UGL	EE
ASB	BKG	040687	TRANS-1,3-DICHLOROPROPENE	LT	5.0000	UGL	EE
ASB	BKG	040687	2-CHLOROETHYLVINYL ETHER	LT	10.0000	UGL	EE
ASB	BKG	040687	2,4-DICHLOROPHENOXYACETIC ACID	LT	0.3000	UGL	EE
ASB	BKG	040687	2,4-DICHLOROPHENOXYACETIC ACID	LT	0.3000	UGL	EE
ASB	BKG	080487	ALUMINUM		56.0000	UGL	EE
ASB	BKG	080487	GROSS ALPHA		5.7000	PCL	RM
ASB	BKG	080487	ARSENIC	LT	2.0000	UGL	EE
ASB	BKG	080487	BARIUM		8.0000	UGL	EE
ASB	BKG	080487	NONVOLATILE BETA		4.6000	PCL	RM
ASB	BKG	080487	BROMODICHLOROMETHANE	LT	5.0000	UGL	EE
ASB	BKG	080487	TRICHLOROFLUOROMETHANE	LT	5.0000	UGL	EE
ASB	BKG	080487	CARBON TETRACHLORIDE	LT	1.0000	UGL	EE
ASB	BKG	080487	CARBON TETRACHLORIDE	LT	5.0000	UGL	EE
ASB	BKG	080487	BROMOFORM	LT	10.0000	UGL	EE
ASB	BKG	080487	CHLOROFORM	LT	1.0000	UGL	EE
ASB	BKG	080487	CHLOROFORM	LT	5.0000	UGL	EE
ASB	BKG	080487	BROMOMETHANE	LT	10.0000	UGL	EE
ASB	BKG	080487	CHLOROMETHANE	LT	10.0000	UGL	EE
ASB	BKG	080487	CHLORIDE		2900.0000	UGL	EE
ASB	BKG	080487	CHLOROBENZENE	LT	5.0000	UGL	EE
ASB	BKG	080487	SPECIFIC CONDUCTANCE		36.0000	UMHC	FD
ASB	BKG	080487	CHROMIUM	LT	4.0000	UGL	EE
ASB	BKG	080487	COPPER		9.0000	UGL	EE
ASB	BKG	080487	CYANIDE	LT	5.0000	UGL	EE
ASB	BKG	080487	CHLOROETHENE	LT	10.0000	UGL	EE
ASB	BKG	080487	CHLOROETHANE	LT	10.0000	UGL	EE
ASB	BKG	080487	BENZENE	LT	5.0000	UGL	EE
ASB	BKG	080487	DIBROMOCHLOROMETHANE	LT	5.0000	UGL	EE
ASB	BKG	080487	ENDRIN	LT	0.1000	UGL	EE
ASB	BKG	080487	ETHYLBENZENE	LT	5.0000	UGL	EE
ASB	BKG	080487	IRON		121.0000	UGL	EE
ASB	BKG	080487	FECAL COLIFORM	LT	2.0000		DA
ASB	BKG	080487	LINDANE	LT	0.0500	UGL	EE
ASB	BKG	080487	TOLUENE-D8		99.0000	PER	EE
ASB	BKG	080487	TOLUENE	LT	5.0000	UGL	EE
ASB	BKG	080487	METHOXYCHLOR	LT	0.5000	UGL	EE
ASB	BKG	080487	MANGANESE		4.0000	UGL	EE
ASB	BKG	080487	SODIUM		3440.0000	UGL	EE
ASB	BKG	080487	NICKEL	LT	4.0000	UGL	EE
ASB	BKG	080487	NITRATE AS NITROGEN		2040.0000	UGL	EE
ASB	BKG	080487	LEAD		11.0000	UGL	EE
ASB	BKG	080487	P-BROMOFLUOROBENZENE		98.0000	PER	EE
ASB	BKG	080487	PH		4.6000	PH	FD
ASB	BKG	080487	PHENOLS	LT	5.0000	UGL	EE
ASB	BKG	080487	SELENIUM	LT	2.0000	UGL	EE
ASB	BKG	080487	SILVEX	LT	0.0900	UGL	EE
ASB	BKG	080487	SULFATE	LT	5000.0000	UGL	EE
ASB	BKG	080487	SULFATE	LT	5000.0000	UGL	EE
ASB	BKG	080487	1,1,2,2-TETRACHLOROETHANE	LT	10.0000	UGL	EE

ASB	BKG	080487	TETRACHLOROETHYLENE	LT	1.0000	UGL	EE
ASB	BKG	080487	TETRACHLOROETHYLENE	LT	5.0000	UGL	EE
ASB	BKG	080487	TOTAL DISSOLVED SOLIDS		72000.0000	UGL	EE
ASB	BKG	080487	TOTAL ORGANIC CARBON	LT	1000.0000	UGL	EE
ASB	BKG	080487	TOTAL RADIUM		5.9000	PCL	RM
ASB	BKG	080487	TOTAL ORGANIC HALOGENS	LT	5.0000	UGL	EE
ASB	BKG	080487	TOTAL PHOSPHATES		20.0000	UGL	EE
ASB	BKG	080487	TRICHLOROETHYLENE	LT	1.0000	UGL	EE
ASB	BKG	080487	TRICHLOROETHYLENE	LT	5.0000	UGL	EE
ASB	BKG	080487	TURBIDITY		0.2000	TU	EE
ASB	BKG	080487	TOXAPHENE	LT	1.0000	UGL	EE
ASB	BKG	080487	TRANS-1,2-DICHLOROETHENE	LT	5.0000	UGL	EE
ASB	BKG	080487	URANIUM	LT	1000.0000	UGL	EE
ASB	BKG	080487	1,1-DICHLOROETHYLENE	LT	5.0000	UGL	EE
ASB	BKG	080487	1,1-DICHLOROETHANE	LT	5.0000	UGL	EE
ASB	BKG	080487	1,1,1-TRICHLOROETHANE	LT	1.0000	UGL	EE
ASB	BKG	080487	1,1,1-TRICHLOROETHANE	LT	5.0000	UGL	EE
ASB	BKG	080487	1,1,2-TRICHLOROETHANE	LT	5.0000	UGL	EE
ASB	BKG	080487	1,2-DICHLOROETHANE-D4		97.0000	PER	EE
ASB	BKG	080487	1,2-DICHLOROETHANE	LT	1.0000	UGL	EE
ASB	BKG	080487	1,2-DICHLOROPROPANE	LT	10.0000	UGL	EE
ASB	BKG	080487	CIS-1,3-DICHLOROPROPENE	LT	5.0000	UGL	EE
ASB	BKG	080487	TRANS-1,3-DICHLOROPROPENE	LT	5.0000	UGL	EE
ASB	BKG	080487	2-CHLOROETHYLVINYL ETHER	LT	10.0000	UGL	EE
ASB	BKG	080487	2,4-DICHLOROPHENOXYACETIC ACID	LT	0.3000	UGL	EE
ASB	BKG	080487	ZINC		7.0000	UGL	EE
ASB	BKG	090887	SPECIFIC CONDUCTANCE		38.0000	UMHC	FD
ASB	BKG	090887	SPECIFIC CONDUCTANCE		31.4000	UMHC	EE
ASB	BKG	090887	SPECIFIC CONDUCTANCE		34.6000	UMHC	EE
ASB	BKG	090887	SPECIFIC CONDUCTANCE		33.0000	UMHC	EE
ASB	BKG	090887	PH		4.5000	PH	FD
ASB	BKG	090887	PH		4.8400	PH	EE
ASB	BKG	090887	PH		4.7300	PH	EE
ASB	BKG	090887	PH		4.7700	PH	EE
ASB	BKG	090887	TOTAL ORGANIC CARBON		1000.0000	UGL	EE
ASB	BKG	090887	TOTAL ORGANIC CARBON		2000.0000	UGL	EE
ASB	BKG	090887	TOTAL ORGANIC CARBON		1000.0000	UGL	EE
ASB	BKG	090887	TOTAL ORGANIC CARBON	LT	1000.0000	UGL	EE
ASB	BKG	090887	TOTAL ORGANIC HALOGENS	LT	5.0000	UGL	EE
ASB	BKG	090887	TOTAL ORGANIC HALOGENS	LT	5.0000	UGL	EE
ASB	BKG	090887	TOTAL ORGANIC HALOGENS	LT	5.0000	UGL	EE
ASB	BKG	090887	TOTAL ORGANIC HALOGENS	LT	5.0000	UGL	EE
ASB	BKG	121787	ALUMINUM		74.0000	UGL	EE
ASB	BKG	121787	GROSS ALPHA		21.7000	PCL	EE
ASB	BKG	121787	ARSENIC	LT	2.0000	UGL	EE
ASB	BKG	121787	BARIUM		14.0000	UGL	EE
ASB	BKG	121787	NONVOLATILE BETA		13.7000	PCL	EE
ASB	BKG	121787	BROMODICHLOROMETHANE	LT	5.0000	UGL	EE
ASB	BKG	121787	BROMODICHLOROMETHANE	LT	5.0000	UGL	EE
ASB	BKG	121787	TRICHLOROFLUOROMETHANE	LT	5.0000	UGL	EE
ASB	BKG	121787	TRICHLOROFLUOROMETHANE	LT	5.0000	UGL	EE
ASB	BKG	121787	CARBON TETRACHLORIDE	LT	1.0000	UGL	EE
ASB	BKG	121787	CARBON TETRACHLORIDE		121.0000	PER	EE
ASB	BKG	121787	CARBON TETRACHLORIDE	LT	5.0000	UGL	EE
ASB	BKG	121787	CARBON TETRACHLORIDE	LT	5.0000	UGL	EE
ASB	BKG	121787	BROMOFORM	LT	10.0000	UGL	EE
ASB	BKG	121787	BROMOFORM	LT	10.0000	UGL	EE
ASB	BKG	121787	CHLOROFORM	LT	1.0000	UGL	EE
ASB	BKG	121787	CHLOROFORM		98.0000	PER	EE
ASB	BKG	121787	CHLOROFORM	LT	5.0000	UGL	EE
ASB	BKG	121787	CHLOROFORM	LT	5.0000	UGL	EE
ASB	BKG	121787	BROMOMETHANE	LT	10.0000	UGL	EE
ASB	BKG	121787	BROMOMETHANE	LT	10.0000	UGL	EE
ASB	BKG	121787	CHLOROMETHANE	LT	10.0000	UGL	EE

ASB	BKG	121787	CHLOROMETHANE	LT	10.0000	UGL	EE
ASB	BKG	121787	CHLOROBENZENE	LT	5.0000	UGL	EE
ASB	BKG	121787	CHLOROBENZENE	LT	5.0000	UGL	EE
ASB	BKG	121787	SPECIFIC CONDUCTANCE		28.0000	UMHC	FD
ASB	BKG	121787	SPECIFIC CONDUCTANCE		35.5000	UMHC	EE
ASB	BKG	121787	SPECIFIC CONDUCTANCE		35.9000	UMHC	EE
ASB	BKG	121787	SPECIFIC CONDUCTANCE		33.9000	UMHC	EE
ASB	BKG	121787	CHROMIUM		6.0000	UGL	EE
ASB	BKG	121787	COPPER		15.0000	UGL	EE
ASB	BKG	121787	CYANIDE	LT	5.0000	UGL	EE
ASB	BKG	121787	CHLOROETHENE	LT	10.0000	UGL	EE
ASB	BKG	121787	CHLOROETHENE	LT	10.0000	UGL	EE
ASB	BKG	121787	CHLOROETHANE	LT	10.0000	UGL	EE
ASB	BKG	121787	CHLOROETHANE	LT	10.0000	UGL	EE
ASB	BKG	121787	BENZENE	LT	5.0000	UGL	EE
ASB	BKG	121787	BENZENE	LT	5.0000	UGL	EE
ASB	BKG	121787	DIBROMOCHLOROMETHANE	LT	5.0000	UGL	EE
ASB	BKG	121787	DIBROMOCHLOROMETHANE	LT	5.0000	UGL	EE
ASB	BKG	121787	ENDRIN	LT	0.1000	UGL	EE
ASB	BKG	121787	ETHYLBENZENE	LT	5.0000	UGL	EE
ASB	BKG	121787	ETHYLBENZENE	LT	5.0000	UGL	EE
ASB	BKG	121787	IRON		33.0000	UGL	EE
ASB	BKG	121787	LINDANE	LT	0.0500	UGL	EE
ASB	BKG	121787	TOLUENE-D8		101.0000	PER	EE
ASB	BKG	121787	TOLUENE-D8		99.0000	PER	EE
ASB	BKG	121787	TOLUENE	LT	5.0000	UGL	EE
ASB	BKG	121787	TOLUENE	LT	5.0000	UGL	EE
ASB	BKG	121787	METHOXYCHLOR	LT	0.5000	UGL	EE
ASB	BKG	121787	MANGANESE		14.0000	UGL	EE
ASB	BKG	121787	SODIUM		3460.0000	UGL	EE
ASB	BKG	121787	NICKEL		12.0000	UGL	EE
ASB	BKG	121787	NITRATE AS NITROGEN		3040.0000	UGL	EE
ASB	BKG	121787	LEAD		8.0000	UGL	EE
ASB	BKG	121787	P-BROMOFLUOROBENZENE		104.0000	PER	EE
ASB	BKG	121787	P-BROMOFLUOROBENZENE		105.0000	PER	EE
ASB	BKG	121787	PH		4.2000	PH	FD
ASB	BKG	121787	PH		4.6300	PH	EE
ASB	BKG	121787	PH		4.5800	PH	EE
ASB	BKG	121787	PH		4.6100	PH	EE
ASB	BKG	121787	PHENOLS	LT	5.0000	UGL	EE
ASB	BKG	121787	SELENIUM	LT	2.0000	UGL	EE
ASB	BKG	121787	SILVEX	LT	0.0900	UGL	EE
ASB	BKG	121787	TIN	LT	120.0000	UGL	EE
ASB	BKG	121787	SULFATE	LT	5000.0000	UGL	EE
ASB	BKG	121787	1,1,2,2-TETRACHLOROETHANE	LT	10.0000	UGL	EE
ASB	BKG	121787	1,1,2,2-TETRACHLOROETHANE	LT	10.0000	UGL	EE
ASB	BKG	121787	TETRACHLOROETHYLENE	LT	1.0000	UGL	EE
ASB	BKG	121787	TETRACHLOROETHYLENE		110.0000	PER	EE
ASB	BKG	121787	TETRACHLOROETHYLENE	LT	5.0000	UGL	EE
ASB	BKG	121787	TETRACHLOROETHYLENE	LT	5.0000	UGL	EE
ASB	BKG	121787	TOTAL DISSOLVED SOLIDS		10000.0000	UGL	EE
ASB	BKG	121787	TOTAL DISSOLVED SOLIDS		8000.0000	UGL	EE
ASB	BKG	121787	TOTAL ORGANIC CARBON	LT	1000.0000	UGL	EE
ASB	BKG	121787	TOTAL ORGANIC CARBON	LT	1000.0000	UGL	EE
ASB	BKG	121787	TOTAL ORGANIC CARBON	LT	1000.0000	UGL	EE
ASB	BKG	121787	TOTAL ORGANIC CARBON	LT	1000.0000	UGL	EE
ASB	BKG	121787	TOTAL RADIUM		6.3000	PCL	EE
ASB	BKG	121787	TOTAL ORGANIC HALOGENS	LT	5.0000	UGL	EE
ASB	BKG	121787	TOTAL ORGANIC HALOGENS	LT	5.0000	UGL	EE
ASB	BKG	121787	TOTAL ORGANIC HALOGENS	LT	5.0000	UGL	EE
ASB	BKG	121787	TOTAL ORGANIC HALOGENS	LT	5.0000	UGL	EE
ASB	BKG	121787	TOTAL ORGANIC HALOGENS	LT	5.0000	UGL	EE
ASB	BKG	121787	TOTAL PHOSPHATES		70.0000	UGL	EE
ASB	BKG	121787	TRICHLOROETHYLENE	LT	1.0000	UGL	EE

Raw Background Data

ASB	BKG	121787	TRICHLOROETHYLENE		111.0000	PER	EE
ASB	BKG	121787	TRICHLOROETHYLENE	LT	5.0000	UGL	EE
ASB	BKG	121787	TRICHLOROETHYLENE	LT	5.0000	UGL	EE
ASB	BKG	121787	TURBIDITY		0.2320	NTU	EE
ASB	BKG	121787	TOXAPHENE	LT	1.0000	UGL	EE
ASB	BKG	121787	TRANS-1,2-DICHLOROETHENE	LT	5.0000	UGL	EE
ASB	BKG	121787	TRANS-1,2-DICHLOROETHENE	LT	5.0000	UGL	EE
ASB	BKG	121787	URANIUM	LT	1000.0000	UGL	EE
ASB	BKG	121787	1,1-DICHLOROETHYLENE	LT	5.0000	UGL	EE
ASB	BKG	121787	1,1-DICHLOROETHYLENE	LT	5.0000	UGL	EE
ASB	BKG	121787	1,1-DICHLOROETHANE	LT	5.0000	UGL	EE
ASB	BKG	121787	1,1-DICHLOROETHANE	LT	5.0000	UGL	EE
ASB	BKG	121787	1,1,1-TRICHLOROETHANE	LT	1.0000	UGL	EE
ASB	BKG	121787	1,1,1-TRICHLOROETHANE		106.0000	PER	EE
ASB	BKG	121787	1,1,1-TRICHLOROETHANE	LT	5.0000	UGL	EE
ASB	BKG	121787	1,1,1-TRICHLOROETHANE	LT	5.0000	UGL	EE
ASB	BKG	121787	1,1,2-TRICHLOROETHANE	LT	5.0000	UGL	EE
ASB	BKG	121787	1,1,2-TRICHLOROETHANE	LT	5.0000	UGL	EE
ASB	BKG	121787	1,2-DICHLOROETHANE-D4		86.0000	PER	EE
ASB	BKG	121787	1,2-DICHLOROETHANE-D4		88.0000	PER	EE
ASB	BKG	121787	1,2-DICHLOROETHANE	LT	1.0000	UGL	EE
ASB	BKG	121787	1,2-DICHLOROETHANE	LT	1.0000	UGL	EE
ASB	BKG	121787	1,2-DICHLOROPROPANE	LT	10.0000	UGL	EE
ASB	BKG	121787	1,2-DICHLOROPROPANE	LT	10.0000	UGL	EE
ASB	BKG	121787	CIS-1,3-DICHLOROPROPENE	LT	5.0000	UGL	EE
ASB	BKG	121787	CIS-1,3-DICHLOROPROPENE	LT	5.0000	UGL	EE
ASB	BKG	121787	TRANS-1,3-DICHLOROPROPENE	LT	5.0000	UGL	EE
ASB	BKG	121787	TRANS-1,3-DICHLOROPROPENE	LT	5.0000	UGL	EE
ASB	BKG	121787	2-CHLOROETHYLVINYL ETHER	LT	10.0000	UGL	EE
ASB	BKG	121787	2-CHLOROETHYLVINYL ETHER	LT	10.0000	UGL	EE
ASB	BKG	121787	2,4-DICHLOROPHENOXYACETIC ACID	LT	0.3000	UGL	EE
ASB	BKG	121787	ZINC		54.0000	UGL	EE
ASB	BKG	022488	SILVER	LT	2.0000	UGL	EE
ASB	BKG	022488	ALUMINUM		57.0000	UGL	EE
ASB	BKG	022488	GROSS ALPHA		20.6000	PCL	EE
ASB	BKG	022488	GROSS ALPHA		21.1000	PCL	EE
ASB	BKG	022488	BARIUM		10.0000	UGL	EE
ASB	BKG	022488	NONVOLATILE BETA		11.5000	PCL	EE
ASB	BKG	022488	NONVOLATILE BETA		12.9000	PCL	EE
ASB	BKG	022488	CARBON TETRACHLORIDE	LT	1.0000	UGL	EE
ASB	BKG	022488	CHLOROFORM	LT	1.0000	UGL	EE
ASB	BKG	022488	CHLORIDE		2300.0000	UGL	EE
ASB	BKG	022488	SPECIFIC CONDUCTANCE		36.0000	UMHC	FD
ASB	BKG	022488	COPPER		9.0000	UGL	EE
ASB	BKG	022488	SODIUM		3460.0000	UGL	EE
ASB	BKG	022488	NICKEL	LT	4.0000	UGL	EE
ASB	BKG	022488	NITRATE AS NITROGEN		1810.0000	UGL	EE
ASB	BKG	022488	LEAD		9.0000	UGL	EE
ASB	BKG	022488	PH		4.5000	PH	FD
ASB	BKG	022488	PHENOLS	LT	5.0000	UGL	EE
ASB	BKG	022488	TIN		544.0000	UGL	EE
ASB	BKG	022488	TETRACHLOROETHYLENE	LT	1.0000	UGL	EE
ASB	BKG	022488	TOTAL DISSOLVED SOLIDS		30000.0000	UGL	EE
ASB	BKG	022488	TOTAL ORGANIC CARBON	LT	1000.0000	UGL	EE
ASB	BKG	022488	TOTAL RADIUM		6.8000	PCL	EE
ASB	BKG	022488	TOTAL RADIUM		7.4000	PCL	EE
ASB	BKG	022488	TRICHLOROETHYLENE	LT	1.0000	UGL	EE
ASB	BKG	022488	1,1,1-TRICHLOROETHANE	LT	1.0000	UGL	EE
ASB	BKG	051088	SILVER	LT	2.0000	UGL	EE
ASB	BKG	051088	ALUMINUM		253.0000	UGL	EE
ASB	BKG	051088	ARSENIC	LT	2.0000	UGL	EE
ASB	BKG	051088	BARIUM		7.0000	UGL	EE
ASB	BKG	051088	BROMODICHLOROMETHANE	LT	5.0000	UGL	EE
ASB	BKG	051088	TRICHLOROFLUOROMETHANE	LT	5.0000	UGL	EE

ASB	BKG	051088	CARBON TETRACHLORIDE	LT	5.0000	UGL	EE
ASB	BKG	051088	CADMIUM	LT	2.0000	UGL	EE
ASB	BKG	051088	BROMOFORM	LT	10.0000	UGL	EE
ASB	BKG	051088	CHLOROFORM	LT	5.0000	UGL	EE
ASB	BKG	051088	BROMOMETHANE	LT	10.0000	UGL	EE
ASB	BKG	051088	CHLOROMETHANE	LT	10.0000	UGL	EE
ASB	BKG	051088	CHLORIDE		2500.0000	UGL	EE
ASB	BKG	051088	CHLORIDE		2400.0000	UGL	EE
ASB	BKG	051088	CHLOROBENZENE	LT	5.0000	UGL	EE
ASB	BKG	051088	SPECIFIC CONDUCTANCE		38.0000	UMHC	FD
ASB	BKG	051088	CHROMIUM	LT	4.0000	UGL	EE
ASB	BKG	051088	COPPER		6.0000	UGL	EE
ASB	BKG	051088	CYANIDE	LT	5.0000	UGL	EE
ASB	BKG	051088	CHLOROETHENE	LT	10.0000	UGL	EE
ASB	BKG	051088	CHLOROETHANE	LT	10.0000	UGL	EE
ASB	BKG	051088	BENZENE	LT	5.0000	UGL	EE
ASB	BKG	051088	DIBROMOCHLOROMETHANE	LT	5.0000	UGL	EE
ASB	BKG	051088	ETHYLBENZENE	LT	5.0000	UGL	EE
ASB	BKG	051088	MERCURY	LT	0.2000	UGL	EE
ASB	BKG	051088	TOLUENE-D8		98.0000	PER	EE
ASB	BKG	051088	TOLUENE	LT	5.0000	UGL	EE
ASB	BKG	051088	SODIUM		3700.0000	UGL	EE
ASB	BKG	051088	NICKEL	LT	4.0000	UGL	EE
ASB	BKG	051088	NITRATE AS NITROGEN		1560.0000	UGL	EE
ASB	BKG	051088	LEAD		11.0000	UGL	EE
ASB	BKG	051088	P-BROMOFLUOROBENZENE		101.0000	PER	EE
ASB	BKG	051088	PH		4.4000	PH	FD
ASB	BKG	051088	PHENOLS	LT	5.0000	UGL	EE
ASB	BKG	051088	SELENIUM	LT	2.0000	UGL	EE
ASB	BKG	051088	TIN	LT	120.0000	UGL	EE
ASB	BKG	051088	SULFATE	LT	5000.0000	UGL	EE
ASB	BKG	051088	SULFATE	LT	5000.0000	UGL	EE
ASB	BKG	051088	1,1,2,2-TETRACHLOROETHANE	LT	10.0000	UGL	EE
ASB	BKG	051088	TETRACHLOROETHYLENE	LT	5.0000	UGL	EE
ASB	BKG	051088	TOTAL DISSOLVED SOLIDS		40000.0000	UGL	EE
ASB	BKG	051088	TOTAL RADIUM		6.2200	PCL	EE
ASB	BKG	051088	TOTAL PHOSPHATES		30.0000	UGL	EE
ASB	BKG	051088	TRICHLOROETHYLENE	LT	5.0000	UGL	EE
ASB	BKG	051088	TRANS-1,2-DICHLOROETHENE	LT	5.0000	UGL	EE
ASB	BKG	051088	URANIUM	LT	1000.0000	UGL	EE
ASB	BKG	051088	1,1-DICHLOROETHYLENE	LT	5.0000	UGL	EE
ASB	BKG	051088	1,1-DICHLOROETHANE	LT	5.0000	UGL	EE
ASB	BKG	051088	1,1,1-TRICHLOROETHANE	LT	5.0000	UGL	EE
ASB	BKG	051088	1,1,2-TRICHLOROETHANE	LT	5.0000	UGL	EE
ASB	BKG	051088	1,2-DICHLOROETHANE-D.		95.0000	PER	EE
ASB	BKG	051088	1,2-DICHLOROETHANE	LT	1.0000	UGL	EE
ASB	BKG	051088	1,2-DICHLOROPROPANE	LT	10.0000	UGL	EE
ASB	BKG	051088	CIS-1,3-DICHLOROPROPENE	LT	5.0000	UGL	EE
ASB	BKG	051088	TRANS-1,3-DICHLOROPROPENE	LT	5.0000	UGL	EE
ASB	BKG	051088	2-CHLOROETHYLVINYL ETHER	LT	10.0000	UGL	EE
ASB	BKG	051088	ZINC		6.0000	UGL	EE
ASB	BKG	081488	SILVER	LT	2.0000	UGL	EE
ASB	BKG	081488	ALUMINUM		43.0000	UGL	EE
ASB	BKG	081488	ARSENIC	LT	2.0000	UGL	EE
ASB	BKG	081488	BARIUM		6.0000	UGL	EE
ASB	BKG	081488	CARBON TETRACHLORIDE	LT	1.0000	UGL	EE
ASB	BKG	081488	CARBON TETRACHLORIDE		96.0000	PER	EE
ASB	BKG	081488	CADMIUM	LT	2.0000	UGL	EE
ASB	BKG	081488	CHLOROFORM	LT	1.0000	UGL	EE
ASB	BKG	081488	CHLOROFORM		105.0000	PER	EE
ASB	BKG	081488	CHLOROFORM	LT	1.0000	UGL	MA
ASB	BKG	081488	CHLORIDE		2300.0000	UGL	EE
ASB	BKG	081488	SPECIFIC CONDUCTANCE		36.0000	UMHC	FD
ASB	BKG	081488	CHROMIUM	LT	4.0000	UGL	EE

ASB	BKG	081488	COPPER		4.0000	UGL	EE
ASB	BKG	081488	CYANIDE	LT	5.0000	UGL	EE
ASB	BKG	081488	MERCURY	LT	0.2000	UGL	EE
ASB	BKG	081488	MANGANESE		3.0000	UGL	EE
ASB	BKG	081488	SODIUM		3360.0000	UGL	EE
ASB	BKG	081488	NICKEL	LT	4.0000	UGL	EE
ASB	BKG	081488	NITRATE AS NITROGEN		1980.0000	UGL	EE
ASB	BKG	081488	LEAD	LT	6.0000	UGL	EE
ASB	BKG	081488	PH		4.4000	PH	FD
ASB	BKG	081488	PHENOLS	LT	5.0000	UGL	EE
ASB	BKG	081488	SELENIUM	LT	2.0000	UGL	EE
ASB	BKG	081488	TIN	LT	120.0000	UGL	EE
ASB	BKG	081488	SULFATE	LT	5000.0000	UGL	EE
ASB	BKG	081488	TETRACHLOROETHYLENE	LT	1.0000	UGL	EE
ASB	BKG	081488	TETRACHLOROETHYLENE		106.0000	PER	EE
ASB	BKG	081488	TETRACHLOROETHYLENE	LT	1.0000	UGL	MA
ASB	BKG	081488	TOTAL DISSOLVED SOLIDS		31000.0000	UGL	EE
ASB	BKG	081488	TOTAL RADIUM		6.8700	PCL	EE
ASB	BKG	081488	TOTAL PHOSPHATES	LT	20.0000	UGL	EE
ASB	BKG	081488	TRICHLOROETHYLENE	LT	1.0000	UGL	EE
ASB	BKG	081488	TRICHLOROETHYLENE		100.0000	PER	EE
ASB	BKG	081488	TRICHLOROETHYLENE	LT	1.0000	UGL	MA
ASB	BKG	081488	TRANS-1,2-DICHLOROETHENE	LT	1.0000	UGL	MA
ASB	BKG	081488	URANIUM	LT	1000.0000	UGL	EE
ASB	BKG	081488	1,1-DICHLOROETHYLENE	LT	1.0000	UGL	MA
ASB	BKG	081488	1,1,1-TRICHLOROETHANE	LT	1.0000	UGL	EE
ASB	BKG	081488	1,1,1-TRICHLOROETHANE		100.0000	PER	EE
ASB	BKG	081488	1,1,1-TRICHLOROETHANE	LT	1.0000	UGL	MA
ASB	BKG	081488	ZINC		24.0000	UGL	EE
ASB	BKG	110888	SILVER	LT	2.0000	UGL	EE
ASB	BKG	110888	ALUMINUM		44.0000	UGL	EE
ASB	BKG	110888	ARSENIC	LT	2.0000	UGL	EE
ASB	BKG	110888	BARIUM		9.0000	UGL	EE
ASB	BKG	110888	CADMIUM	LT	2.0000	UGL	EE
ASB	BKG	110888	CHLOROFORM	LT	1.0000	UGL	MA
ASB	BKG	110888	CHLORIDE		2200.0000	UGL	EE
ASB	BKG	110888	SPECIFIC CONDUCTANCE		35.0000	UMHC	FD
ASB	BKG	110888	CHROMIUM	LT	4.0000	UGL	EE
ASB	BKG	110888	COPPER		15.0000	UGL	EE
ASB	BKG	110888	CYANIDE	LT	5.0000	UGL	EE
ASB	BKG	110888	MERCURY	LT	0.2000	UGL	EE
ASB	BKG	110888	SODIUM		3280.0000	UGL	EE
ASB	BKG	110888	NICKEL	LT	4.0000	UGL	EE
ASB	BKG	110888	NITRATE AS NITROGEN		2240.0000	UGL	EE
ASB	BKG	110888	LEAD		15.0000	UGL	EE
ASB	BKG	110888	PH		4.5000	PH	FD
ASB	BKG	110888	PHENOLS	LT	5.0000	UGL	EE
ASB	BKG	110888	SELENIUM	LT	2.0000	UGL	EE
ASB	BKG	110888	SULFATE	LT	5000.0000	UGL	EE
ASB	BKG	110888	TETRACHLOROETHYLENE	LT	1.0000	UGL	MA
ASB	BKG	110888	TOTAL DISSOLVED SOLIDS		59000.0000	UGL	EE
ASB	BKG	110888	TOTAL RADIUM		6.2600	PCL	RM
ASB	BKG	110888	TOTAL PHOSPHATES		60.0000	UGL	EE
ASB	BKG	110888	TRICHLOROETHYLENE	LT	1.0000	UGL	MA
ASB	BKG	110888	TRANS-1,2-DICHLOROETHENE	LT	1.0000	UGL	MA
ASB	BKG	110888	URANIUM	LT	1000.0000	UGL	EE
ASB	BKG	110888	1,1-DICHLOROETHYLENE	LT	1.0000	UGL	MA
ASB	BKG	110888	1,1,1-TRICHLOROETHANE	LT	1.0000	UGL	MA
ASB	BKG	110888	ZINC		12.0000	UGL	EE
ASB	BKG	031289	SILVER	LT	2.0000	UGL	EE
ASB	BKG	031289	SILVER	LT	2.0000	UGL	EE
ASB	BKG	031289	SILVER	LT	2.0000	UGL	EE
ASB	BKG	031289	SILVER	LT	10.0000	UGL	EW
ASB	BKG	031289	SILVER	LT	10.0000	UGL	WA

ASB	BKG	031289	ALUMINUM		47.0000	UGL	EE
ASB	BKG	031289	ALUMINUM		46.0000	UGL	EE
ASB	BKG	031289	ALUMINUM	LT	400.0000	UGL	EW
ASB	BKG	031289	ALUMINUM	LT	200.0000	UGL	WA
ASB	BKG	031289	GROSS ALPHA		22.5000	PCL	RM
ASB	BKG	031289	GROSS ALPHA		29.8000	PCL	RM
ASB	BKG	031289	GROSS ALPHA		24.6000	PCL	EW
ASB	BKG	031289	GROSS ALPHA		17.0000	PCL	WA
ASB	BKG	031289	ARSENIC	LT	2.0000	UGL	EE
ASB	BKG	031289	ARSENIC	LT	2.0000	UGL	EE
ASB	BKG	031289	ARSENIC	LT	5.0000	UGL	EW
ASB	BKG	031289	ARSENIC	LT	10.0000	UGL	WA
ASB	BKG	031289	BARIUM		9.0000	UGL	EE
ASB	BKG	031289	BARIUM		8.0000	UGL	EE
ASB	BKG	031289	BARIUM	LT	100.0000	UGL	EW
ASB	BKG	031289	BARIUM	LT	200.0000	UGL	WA
ASB	BKG	031289	BERYLLIUM	LT	5.0000	UGL	WA
ASB	BKG	031289	NONVOLATILE BETA		20.2000	PCL	RM
ASB	BKG	031289	NONVOLATILE BETA		16.0000	PCL	RM
ASB	BKG	031289	NONVOLATILE BETA		12.6900	PCL	EW
ASB	BKG	031289	NONVOLATILE BETA		8.0000	PCL	WA
ASB	BKG	031289	BROMODICHLOROMETHANE	LT	1.0000	UGL	EW
ASB	BKG	031289	BROMODICHLOROMETHANE	LT	5.0000	UGL	WA
ASB	BKG	031289	CALCIUM	LT	5000.0000	UGL	WA
ASB	BKG	031289	TRICHLOROFLUOROMETHANE	LT	1.0000	UGL	EW
ASB	BKG	031289	TRICHLOROFLUOROMETHANE	LT	5.0000	UGL	WA
ASB	BKG	031289	CARBON TETRACHLORIDE	LT	1.0000	UGL	EE
ASB	BKG	031289	CARBON TETRACHLORIDE	LT	1.0000	UGL	EE
ASB	BKG	031289	CARBON TETRACHLORIDE	LT	1.0000	UGL	EW
ASB	BKG	031289	CARBON TETRACHLORIDE	LT	5.0000	UGL	WA
ASB	BKG	031289	CADMIUM	LT	2.0000	UGL	EE
ASB	BKG	031289	CADMIUM	LT	2.0000	UGL	EE
ASB	BKG	031289	CADMIUM	LT	10.0000	UGL	EW
ASB	BKG	031289	CADMIUM	LT	5.0000	UGL	WA
ASB	BKG	031289	BROMOFORM	LT	1.0000	UGL	EW
ASB	BKG	031289	BROMOFORM	LT	5.0000	UGL	WA
ASB	BKG	031289	CHLOROFORM	LT	1.0000	UGL	EE
ASB	BKG	031289	CHLOROFORM	LT	1.0000	UGL	EE
ASB	BKG	031289	CHLOROFORM	LT	1.0000	UGL	MA
ASB	BKG	031289	CHLOROFORM	LT	1.0000	UGL	MA
ASB	BKG	031289	CHLOROFORM	LT	1.0000	UGL	EW
ASB	BKG	031289	CHLOROFORM	LT	5.0000	UGL	WA
ASB	BKG	031289	METHYLENE CHLORIDE	LT	1.0000	UGL	EW
ASB	BKG	031289	METHYLENE CHLORIDE	LT	5.0000	UGL	WA
ASB	BKG	031289	BROMOMETHANE	LT	1.0000	UGL	EW
ASB	BKG	031289	BROMOMETHANE	LT	10.0000	UGL	WA
ASB	BKG	031289	CHLOROMETHANE	LT	1.0000	UGL	EW
ASB	BKG	031289	CHLOROMETHANE	LT	10.0000	UGL	WA
ASB	BKG	031289	CHLORIDE		2600.0000	UGL	EE
ASB	BKG	031289	CHLORIDE		2500.0000	UGL	EE
ASB	BKG	031289	CHLORIDE		2400.0000	UGL	EE
ASB	BKG	031289	CHLORIDE		2300.0000	UGL	EW
ASB	BKG	031289	CHLORIDE	LT	5000.0000	UGL	WA
ASB	BKG	031289	CHLOROBENZENE	LT	1.0000	UGL	EW
ASB	BKG	031289	CHLOROBENZENE	LT	5.0000	UGL	WA
ASB	BKG	031289	COBALT	LT	50.0000	UGL	WA
ASB	BKG	031289	SPECIFIC CONDUCTANCE		35.0000	UMHC	FD
ASB	BKG	031289	SPECIFIC CONDUCTANCE		35.0000	UMHC	FD
ASB	BKG	031289	SPECIFIC CONDUCTANCE		30.5000	UMHC	EE
ASB	BKG	031289	SPECIFIC CONDUCTANCE		31.0000	UMHC	EW
ASB	BKG	031289	SPECIFIC CONDUCTANCE		31.2000	UMHC	WA
ASB	BKG	031289	CHROMIUM	LT	4.0000	UGL	EE
ASB	BKG	031289	CHROMIUM	LT	4.0000	UGL	EE
ASB	BKG	031289	CHROMIUM	LT	50.0000	UGL	EW

Raw Background Data

ASB	BKG	031289	CHROMIUM	LT	10.0000	UGL	WA
ASB	BKG	031289	COPPER		5.0000	UGL	EE
ASB	BKG	031289	COPPER		6.0000	UGL	EE
ASB	BKG	031289	COPPER	LT	20.0000	UGL	EW
ASB	BKG	031289	COPPER	LT	25.0000	UGL	WA
ASB	BKG	031289	CYANIDE	LT	5.0000	UGL	EE
ASB	BKG	031289	CYANIDE	LT	5.0000	UGL	EE
ASB	BKG	031289	CYANIDE	LT	20.0000	UGL	EW
ASB	BKG	031289	CYANIDE	LT	10.0000	UGL	WA
ASB	BKG	031289	CHLOROETHENE	LT	1.0000	UGL	EW
ASB	BKG	031289	CHLOROETHENE	LT	10.0000	UGL	WA
ASB	BKG	031289	CHLOROETHANE	LT	1.0000	UGL	EW
ASB	BKG	031289	CHLOROETHANE	LT	10.0000	UGL	WA
ASB	BKG	031289	BENZENE	LT	1.0000	UGL	EW
ASB	BKG	031289	BENZENE	LT	5.0000	UGL	WA
ASB	BKG	031289	DIBROMOCHLOROMETHANE	LT	1.0000	UGL	EW
ASB	BKG	031289	DIBROMOCHLOROMETHANE	LT	5.0000	UGL	WA
ASB	BKG	031289	ETHYLBENZENE	LT	1.0000	UGL	EW
ASB	BKG	031289	ETHYLBENZENE	LT	5.0000	UGL	WA
ASB	BKG	031289	IRON	LT	100.0000	UGL	WA
ASB	BKG	031289	MERCURY	LT	0.2000	UGL	EE
ASB	BKG	031289	MERCURY	LT	0.2000	UGL	EE
ASB	BKG	031289	MERCURY	LT	0.2000	UGL	EW
ASB	BKG	031289	MERCURY	LT	0.2000	UGL	WA
ASB	BKG	031289	POTASSIUM	LT	5000.0000	UGL	WA
ASB	BKG	031289	LITHIUM	LT	50.0000	UGL	WA
ASB	BKG	031289	TOLUENE-D8		97.0000	PER	WA
ASB	BKG	031289	TOLUENE	LT	1.0000	UGL	EW
ASB	BKG	031289	TOLUENE	LT	5.0000	UGL	WA
ASB	BKG	031289	MAGNESIUM	LT	5000.0000	UGL	WA
ASB	BKG	031289	MANGANESE		3.0000	UGL	EE
ASB	BKG	031289	MANGANESE		4.0000	UGL	EE
ASB	BKG	031289	MANGANESE	LT	20.0000	UGL	EW
ASB	BKG	031289	MANGANESE	LT	15.0000	UGL	WA
ASB	BKG	031289	SODIUM		2570.0000	UGL	EE
ASB	BKG	031289	SODIUM		2490.0000	UGL	EE
ASB	BKG	031289	SODIUM		2900.0000	UGL	EW
ASB	BKG	031289	SODIUM	LT	5000.0000	UGL	WA
ASB	BKG	031289	NICKEL	LT	4.0000	UGL	EE
ASB	BKG	031289	NICKEL	LT	4.0000	UGL	EE
ASB	BKG	031289	NICKEL	LT	50.0000	UGL	EW
ASB	BKG	031289	NICKEL	LT	40.0000	UGL	WA
ASB	BKG	031289	NITRATE AS NITROGEN		1960.0000	UGL	EE
ASB	BKG	031289	NITRATE AS NITROGEN		2020.0000	UGL	EE
ASB	BKG	031289	NITRATE AS NITROGEN		1990.0000	UGL	EE
ASB	BKG	031289	NITRATE AS NITROGEN		2000.0000	UGL	EW
ASB	BKG	031289	NITRATE AS NITROGEN		1800.0000	UGL	WA
ASB	BKG	031289	LEAD	LT	6.0000	UGL	EE
ASB	BKG	031289	LEAD	LT	6.0000	UGL	EE
ASB	BKG	031289	LEAD	LT	100.0000	UGL	EW
ASB	BKG	031289	LEAD		6.9000	UGL	WA
ASB	BKG	031289	P-BROMOFLUOROBENZENE		100.0000	PER	WA
ASB	BKG	031289	PH		4.3000	PH	FD
ASB	BKG	031289	PH		4.3000	PH	FD
ASB	BKG	031289	PH		3.9900	PH	EE
ASB	BKG	031289	PH		4.5000	PH	EW
ASB	BKG	031289	PH		4.6000	PH	WA
ASB	BKG	031289	PHENOLS	LT	5.0000	UGL	EE
ASB	BKG	031289	PHENOLS	LT	5.0000	UGL	EE
ASB	BKG	031289	PHENOLS	LT	5.0000	UGL	EW
ASB	BKG	031289	PHENOLS	LT	5.0000	UGL	WA
ASB	BKG	031289	ANTIMONY	LT	60.0000	UGL	WA
ASB	BKG	031289	SELENIUM	LT	2.0000	UGL	EE
ASB	BKG	031289	SELENIUM	LT	2.0000	UGL	EE

ASB	BKG	031289	SELENIUM	LT	10.0000	UGL	EW
ASB	BKG	031289	SELENIUM	LT	5.0000	UGL	WA
ASB	BKG	031289	SILICA		3000.0000	UGL	WA
ASB	BKG	031289	TIN	LT	120.0000	UGL	EE
ASB	BKG	031289	TIN	LT	120.0000	UGL	EE
ASB	BKG	031289	TIN	LT	1000.0000	UGL	EW
ASB	BKG	031289	TIN	LT	100.0000	UGL	WA
ASB	BKG	031289	SULFATE	LT	5000.0000	UGL	EE
ASB	BKG	031289	SULFATE	LT	5000.0000	UGL	EE
ASB	BKG	031289	SULFATE	LT	5000.0000	UGL	EE
ASB	BKG	031289	SULFATE		7000.0000	UGL	EW
ASB	BKG	031289	SULFATE	LT	5000.0000	UGL	WA
ASB	BKG	031289	1,1,2,2-TETRACHLOROETHANE	LT	1.0000	UGL	EW
ASB	BKG	031289	1,1,2,2-TETRACHLOROETHANE	LT	5.0000	UGL	WA
ASB	BKG	031289	TETRACHLOROETHYLENE	LT	1.0000	UGL	EE
ASB	BKG	031289	TETRACHLOROETHYLENE	LT	1.0000	UGL	EE
ASB	BKG	031289	TETRACHLOROETHYLENE	LT	1.0000	UGL	MA
ASB	BKG	031289	TETRACHLOROETHYLENE	LT	1.0000	UGL	MA
ASB	BKG	031289	TETRACHLOROETHYLENE	LT	1.0000	UGL	EW
ASB	BKG	031289	TETRACHLOROETHYLENE	LT	5.0000	UGL	WA
ASB	BKG	031289	TOTAL DISSOLVED SOLIDS		24000.0000	UGL	EE
ASB	BKG	031289	TOTAL DISSOLVED SOLIDS		22000.0000	UGL	EE
ASB	BKG	031289	TOTAL DISSOLVED SOLIDS		36000.0000	UGL	EW
ASB	BKG	031289	TOTAL DISSOLVED SOLIDS		24000.0000	UGL	WA
ASB	BKG	031289	THALLIUM	LT	10.0000	UGL	WA
ASB	BKG	031289	TOTAL ORGANIC CARBON		1000.0000	UGL	EE
ASB	BKG	031289	TOTAL ORGANIC CARBON	LT	1000.0000	UGL	EE
ASB	BKG	031289	TOTAL ORGANIC CARBON	LT	1000.0000	UGL	EE
ASB	BKG	031289	TOTAL ORGANIC CARBON	LT	5000.0000	UGL	EW
ASB	BKG	031289	TOTAL ORGANIC CARBON		1000.0000	UGL	WA
ASB	BKG	031289	TOTAL RADIUM		20.0000	PCL	RM
ASB	BKG	031289	TOTAL RADIUM		11.8000	PCL	RM
ASB	BKG	031289	TOTAL RADIUM		9.0100	PCL	EW
ASB	BKG	031289	TOTAL RADIUM		7.3000	PCL	WA
ASB	BKG	031289	TOTAL PHOSPHATES	LT	20.0000	UGL	EE
ASB	BKG	031289	TOTAL PHOSPHATES	LT	20.0000	UGL	EE
ASB	BKG	031289	TOTAL PHOSPHATES		21.0000	UGL	EE
ASB	BKG	031289	TOTAL PHOSPHATES	LT	10.0000	UGL	EW
ASB	BKG	031289	TOTAL PHOSPHATES	LT	50.0000	UGL	WA
ASB	BKG	031289	TRICHLOROETHYLENE	LT	1.0000	UGL	EE
ASB	BKG	031289	TRICHLOROETHYLENE	LT	1.0000	UGL	EE
ASB	BKG	031289	TRICHLOROETHYLENE	LT	1.0000	UGL	MA
ASB	BKG	031289	TRICHLOROETHYLENE	LT	1.0000	UGL	MA
ASB	BKG	031289	TRICHLOROETHYLENE	LT	1.0000	UGL	EW
ASB	BKG	031289	TRICHLOROETHYLENE	LT	5.0000	UGL	WA
ASB	BKG	031289	TRANS-1,2-DICHLOROETHENE	LT	1.0000	UGL	MA
ASB	BKG	031289	TRANS-1,2-DICHLOROETHENE	LT	1.0000	UGL	MA
ASB	BKG	031289	TRANS-1,2-DICHLOROETHENE	LT	1.0000	UGL	EW
ASB	BKG	031289	TRANS-1,2-DICHLOROETHENE	LT	5.0000	UGL	WA
ASB	BKG	031289	URANIUM	LT	1000.0000	UGL	EE
ASB	BKG	031289	URANIUM	LT	1000.0000	UGL	EE
ASB	BKG	031289	URANIUM	LT	1.0000	UGL	EW
ASB	BKG	031289	URANIUM	LT	1000.0000	UGL	WA
ASB	BKG	031289	VANADIUM	LT	50.0000	UGL	WA
ASB	BKG	031289	XYLENES	LT	1.0000	UGL	EW
ASB	BKG	031289	1,1-DICHLOROETHYLENE	LT	1.0000	UGL	MA
ASB	BKG	031289	1,1-DICHLOROETHYLENE	LT	1.0000	UGL	MA
ASB	BKG	031289	1,1-DICHLOROETHYLENE	LT	1.0000	UGL	EW
ASB	BKG	031289	1,1-DICHLOROETHYLENE	LT	5.0000	UGL	WA
ASB	BKG	031289	1,1-DICHLOROETHANE	LT	1.0000	UGL	EW
ASB	BKG	031289	1,1-DICHLOROETHANE	LT	5.0000	UGL	WA
ASB	BKG	031289	1,1,1-TRICHLOROETHANE	LT	1.0000	UGL	EE
ASB	BKG	031289	1,1,1-TRICHLOROETHANE	LT	1.0000	UGL	EE
ASB	BKG	031289	1,1,1-TRICHLOROETHANE	LT	1.0000	UGL	MA

Raw Background Data

ASB	BKG	031289	1,1,1-TRICHLOROETHANE	LT	1.0000	UGL	MA
ASB	BKG	031289	1,1,1-TRICHLOROETHANE	LT	1.0000	UGL	EW
ASB	BKG	031289	1,1,1-TRICHLOROETHANE	LT	5.0000	UGL	WA
ASB	BKG	031289	1,1,2-TRICHLOROETHANE	LT	1.0000	UGL	EW
ASB	BKG	031289	1,1,2-TRICHLOROETHANE	LT	5.0000	UGL	WA
ASB	BKG	031289	1,2-DICHLOROETHANE-D4		104.0000	PER	WA
ASB	BKG	031289	1,2-DICHLOROBENZENE	LT	1.0000	UGL	EW
ASB	BKG	031289	1,2-DICHLOROETHANE	LT	1.0000	UGL	EW
ASB	BKG	031289	1,2-DICHLOROETHANE	LT	5.0000	UGL	WA
ASB	BKG	031289	1,2-DICHLOROPROPANE	LT	1.0000	UGL	EW
ASB	BKG	031289	1,2-DICHLOROPROPANE	LT	5.0000	UGL	WA
ASB	BKG	031289	1,3-DICHLOROBENZENE	LT	1.0000	UGL	EW
ASB	BKG	031289	CIS-1,3-DICHLOROPROPENE	LT	1.0000	UGL	EW
ASB	BKG	031289	CIS-1,3-DICHLOROPROPENE	LT	5.0000	UGL	WA
ASB	BKG	031289	TRANS-1,3-DICHLOROPROPENE	LT	1.0000	UGL	EW
ASB	BKG	031289	TRANS-1,3-DICHLOROPROPENE	LT	5.0000	UGL	WA
ASB	BKG	031289	1,4-DICHLOROBENZENE	LT	1.0000	UGL	EW
ASB	BKG	031289	2-CHLOROETHYLVINYL ETHER	LT	1.0000	UGL	EW
ASB	BKG	031289	2-CHLOROETHYLVINYL ETHER	LT	5.0000	UGL	WA
ASB	BKG	031289	ZINC		8.0000	UGL	EE
ASB	BKG	031289	ZINC		14.0000	UGL	EE
ASB	BKG	031289	ZINC	LT	10.0000	UGL	EW
ASB	BKG	031289	ZINC	LT	20.0000	UGL	WA
ASB	BKG	061886	SILVER	LT	2.0000	UGL	EE
ASB	BKG	061886	SILVER	LT	2.0000	UGL	EE
ASB	BKG	061886	ALUMINUM		36.0000	UGL	EE
ASB	BKG	061886	ALUMINUM		142.0000	UGL	EE
ASB	BKG	061886	GROSS ALPHA	LT	3.0000	PCL	RM
ASB	BKG	061886	ARSENIC	LT	2.0000	UGL	EE
ASB	BKG	061886	ARSENIC	LT	2.0000	UGL	EE
ASB	BKG	061886	BARIUM	LT	4.0000	UGL	EE
ASB	BKG	061886	BARIUM	LT	4.0000	UGL	EE
ASB	BKG	061886	NONVOLATILE BETA	LT	2.0000	PCL	RM
ASB	BKG	061886	BROMODICHLOROMETHANE	LT	5.0000	UGL	EE
ASB	BKG	061886	TRICHLOROFLUOROMETHANE	LT	5.0000	UGL	EE
ASB	BKG	061886	CARBON TETRACHLORIDE	LT	5.0000	UGL	EE
ASB	BKG	061886	CADMIUM	LT	1.0000	UGL	EE
ASB	BKG	061886	CADMIUM	LT	1.0000	UGL	EE
ASB	BKG	061886	BROMOFORM	LT	10.0000	UGL	EE
ASB	BKG	061886	CHLOROFORM	LT	5.0000	UGL	EE
ASB	BKG	061886	METHYLENE CHLORIDE	LT	5.0000	UGL	EE
ASB	BKG	061886	BROMOMETHANE	LT	10.0000	UGL	EE
ASB	BKG	061886	CHLOROMETHANE	LT	10.0000	UGL	EE
ASB	BKG	061886	CHLORIDE		4000.0000	UGL	EE
ASB	BKG	061886	CHLORIDE		4000.0000	UGL	EE
ASB	BKG	061886	CHLOROBENZENE	LT	5.0000	UGL	EE
ASB	BKG	061886	SPECIFIC CONDUCTANCE		22.0000	UMHC	FD
ASB	BKG	061886	SPECIFIC CONDUCTANCE		22.0000	UMHC	FD
ASB	BKG	061886	SPECIFIC CONDUCTANCE		25.8000	UMHC	EE
ASB	BKG	061886	SPECIFIC CONDUCTANCE		23.4000	UMHC	EE
ASB	BKG	061886	SPECIFIC CONDUCTANCE		22.2000	UMHC	EE
ASB	BKG	061886	CHROMIUM	LT	4.0000	UGL	EE
ASB	BKG	061886	CHROMIUM	LT	4.0000	UGL	EE
ASB	BKG	061886	COPPER		5.0000	UGL	EE
ASB	BKG	061886	COPPER	LT	4.0000	UGL	EE
ASB	BKG	061886	CYANIDE	LT	5.0000	UGL	EE
ASB	BKG	061886	CHLOROETHENE	LT	10.0000	UGL	EE
ASB	BKG	061886	CHLOROETHANE	LT	10.0000	UGL	EE
ASB	BKG	061886	BENZENE	LT	5.0000	UGL	EE
ASB	BKG	061886	DIBROMOCHLOROMETHANE	LT	5.0000	UGL	EE
ASB	BKG	061886	ENDRIN	LT	0.0400	UGL	EE
ASB	BKG	061886	ETHYLBENZENE	LT	5.0000	UGL	EE
ASB	BKG	061886	FLUORIDE		160.0000	UGL	EE
ASB	BKG	061886	FLUORIDE		140.0000	UGL	EE

Raw Background Data

ASB	BKG	061886	IRON		19.0000	UGL	EE
ASB	BKG	061886	IRON		17.0000	UGL	EE
ASB	BKG	061886	MERCURY	LT	0.2000	UGL	EE
ASB	BKG	061886	MERCURY	LT	0.2000	UGL	EE
ASB	BKG	061886	MERCURY		0.2000	UGL	EE
ASB	BKG	061886	LINDANE	LT	1.0000	UGL	EE
ASB	BKG	061886	TOLUENE-D8		42.0000	UGL	EE
ASB	BKG	061886	TOLUENE	LT	5.0000	UGL	EE
ASB	BKG	061886	METHOXYCHLOR	LT	20.0000	UGL	EE
ASB	BKG	061886	MANGANESE		23.0000	UGL	EE
ASB	BKG	061886	MANGANESE		23.0000	UGL	EE
ASB	BKG	061886	SODIUM		1580.0000	UGL	EE
ASB	BKG	061886	SODIUM		1630.0000	UGL	EE
ASB	BKG	061886	NICKEL	LT	4.0000	UGL	EE
ASB	BKG	061886	NICKEL	LT	4.0000	UGL	EE
ASB	BKG	061886	NITRATE AS NITROGEN		950.0000	UGL	EE
ASB	BKG	061886	LEAD		20.0000	UGL	EE
ASB	BKG	061886	LEAD		14.0000	UGL	EE
ASB	BKG	061886	P-BROMOFLUOROBENZENE		48.0000	UGL	EE
ASB	BKG	061886	PH		4.9000	PH	FD
ASB	BKG	061886	PH		4.9000	PH	FD
ASB	BKG	061886	PH		5.0800	PH	EE
ASB	BKG	061886	PH		5.1100	PH	EE
ASB	BKG	061886	PH		5.0300	PH	EE
ASB	BKG	061886	PHENOLS	LT	2.0000	UGL	EE
ASB	BKG	061886	SELENIUM	LT	2.0000	UGL	EE
ASB	BKG	061886	SELENIUM	LT	2.0000	UGL	EE
ASB	BKG	061886	SILVEX	LT	2.0000	UGL	EE
ASB	BKG	061886	SULFATE	LT	5000.0000	UGL	EE
ASB	BKG	061886	1,1,2,2-TETRACHLOROETHANE	LT	10.0000	UGL	EE
ASB	BKG	061886	TETRACHLOROETHYLENE	LT	5.0000	UGL	EE
ASB	BKG	061886	TOTAL COLIFORM	LT	1.0000		EC
ASB	BKG	061886	TOTAL ORGANIC CARBON	LT	1000.0000	UGL	EE
ASB	BKG	061886	TOTAL ORGANIC CARBON	LT	1000.0000	UGL	EE
ASB	BKG	061886	TOTAL ORGANIC CARBON	LT	1000.0000	UGL	EE
ASB	BKG	061886	TOTAL ORGANIC CARBON	LT	1000.0000	UGL	EE
ASB	BKG	061886	TOTAL RADIUM		0.4000	PCL	RM
ASB	BKG	061886	TOTAL ORGANIC HALOGENS	LT	5.0000	UGL	EE
ASB	BKG	061886	TOTAL ORGANIC HALOGENS	LT	5.0000	UGL	EE
ASB	BKG	061886	TOTAL ORGANIC HALOGENS	LT	5.0000	UGL	EE
ASB	BKG	061886	TOTAL ORGANIC HALOGENS	LT	5.0000	UGL	EE
ASB	BKG	061886	TOTAL PHOSPHATES	LT	10.0000	UGL	EE
ASB	BKG	061886	TRICHLOROETHYLENE	LT	5.0000	UGL	EE
ASB	BKG	061886	TURBIDITY		0.3000	TU	EE
ASB	BKG	061886	TOXAPHENE	LT	1.0000	UGL	EE
ASB	BKG	061886	TRANS-1,2-DICHLOROETHENE	LT	5.0000	UGL	EE
ASB	BKG	061886	URANIUM	LT	100.0000	UGL	EE
ASB	BKG	061886	URANIUM	LT	100.0000	UGL	EE
ASB	BKG	061886	1,1-DICHLOROETHYLENE	LT	5.0000	UGL	EE
ASB	BKG	061886	1,1-DICHLOROETHANE	LT	5.0000	UGL	EE
ASB	BKG	061886	1,1,1-TRICHLOROETHANE	LT	5.0000	UGL	EE
ASB	BKG	061886	1,1,2-TRICHLOROETHANE	LT	5.0000	UGL	EE
ASB	BKG	061886	1,2-DICHLOROETHANE-D4		47.0000	UGL	EE
ASB	BKG	061886	1,2-DICHLOROETHANE	LT	1.0000	UGL	EE
ASB	BKG	061886	1,2-DICHLOROPROPANE	LT	10.0000	UGL	EE
ASB	BKG	061886	CIS-1,3-DICHLOROPROPENE	LT	5.0000	UGL	EE
ASB	BKG	061886	TRANS-1,3-DICHLOROPROPENE	LT	5.0000	UGL	EE
ASB	BKG	061886	2-CHLOROETHYLVINYL ETHER	LT	10.0000	UGL	EE
ASB	BKG	061886	2,4-DICHLOROPHENOXYACETIC ACID	LT	20.0000	UGL	EE
ASB	BKG	061886	ZINC		10.0000	UGL	EE
ASB	BKG	061886	ZINC		8.0000	UGL	EE
ASB	BKG	072286	SILVER	LT	2.0000	UGL	EE
ASB	BKG	072286	SILVER	LT	2.0000	UGL	EE
ASB	BKG	072286	ALUMINUM		39.0000	UGL	EE

Raw Background Data

ASB	BKG	072286	ALUMINUM		36.0000	UGL	EE
ASB	BKG	072286	GROSS ALPHA	LT	3.0000	PCL	RM
ASB	BKG	072286	BARIUM		4.0000	UGL	EE
ASB	BKG	072286	BARIUM		4.0000	UGL	EE
ASB	BKG	072286	NONVOLATILE BETA	LT	2.0000	PCL	RM
ASB	BKG	072286	BROMODICHLOROMETHANE	LT	5.0000	UGL	EE
ASB	BKG	072286	TRICHLOROFLUOROMETHANE	LT	5.0000	UGL	EE
ASB	BKG	072286	CARBON TETRACHLORIDE	LT	5.0000	UGL	EE
ASB	BKG	072286	CADMIUM	LT	1.0000	UGL	EE
ASB	BKG	072286	CADMIUM	LT	1.0000	UGL	EE
ASB	BKG	072286	BROMOFORM	LT	10.0000	UGL	EE
ASB	BKG	072286	CHLOROFORM	LT	5.0000	UGL	EE
ASB	BKG	072286	METHYLENE CHLORIDE		4.0000	UGL	EE
ASB	BKG	072286	BROMOMETHANE	LT	10.0000	UGL	EE
ASB	BKG	072286	CHLOROMETHANE	LT	10.0000	UGL	EE
ASB	BKG	072286	CHLORIDE		2270.0000	UGL	EE
ASB	BKG	072286	CHLORIDE		2270.0000	UGL	EE
ASB	BKG	072286	CHLOROBENZENE	LT	5.0000	UGL	EE
ASB	BKG	072286	SPECIFIC CONDUCTANCE		26.0000	UMHC	FD
ASB	BKG	072286	SPECIFIC CONDUCTANCE		26.0000	UMHC	FD
ASB	BKG	072286	SPECIFIC CONDUCTANCE		23.3700	UMHC	EE
ASB	BKG	072286	SPECIFIC CONDUCTANCE		22.9600	UMHC	EE
ASB	BKG	072286	CHROMIUM	LT	4.0000	UGL	EE
ASB	BKG	072286	CHROMIUM	LT	4.0000	UGL	EE
ASB	BKG	072286	COPPER		5.0000	UGL	EE
ASB	BKG	072286	COPPER		7.0000	UGL	EE
ASB	BKG	072286	CYANIDE	LT	5.0000	UGL	EE
ASB	BKG	072286	CHLOROETHENE	LT	10.0000	UGL	EE
ASB	BKG	072286	CHLOROETHANE	LT	10.0000	UGL	EE
ASB	BKG	072286	BENZENE	LT	5.0000	UGL	EE
ASB	BKG	072286	DIBROMOCHLOROMETHANE	LT	5.0000	UGL	EE
ASB	BKG	072286	ETHYLBENZENE	LT	5.0000	UGL	EE
ASB	BKG	072286	FLUORIDE	LT	100.0000	UGL	EE
ASB	BKG	072286	IRON		29.0000	UGL	EE
ASB	BKG	072286	IRON		34.0000	UGL	EE
ASB	BKG	072286	MERCURY	LT	0.2000	UGL	EE
ASB	BKG	072286	MERCURY	LT	0.2000	UGL	EE
ASB	BKG	072286	TOLUENE-D8		52.0000	UGL	EE
ASB	BKG	072286	TOLUENE	LT	5.0000	UGL	EE
ASB	BKG	072286	MANGANESE		25.0000	UGL	EE
ASB	BKG	072286	MANGANESE		24.0000	UGL	EE
ASB	BKG	072286	SODIUM		1970.0000	UGL	EE
ASB	BKG	072286	SODIUM		1900.0000	UGL	EE
ASB	BKG	072286	NICKEL	LT	4.0000	UGL	EE
ASB	BKG	072286	NICKEL	LT	4.0000	UGL	EE
ASB	BKG	072286	NITRATE AS NITROGEN		1200.0000	UGL	EE
ASB	BKG	072286	NITRATE AS NITROGEN		1180.0000	UGL	EE
ASB	BKG	072286	LEAD		22.0000	UGL	EE
ASB	BKG	072286	LEAD		23.0000	UGL	EE
ASB	BKG	072286	P-BROMOFLUOROBENZENE		56.0000	UGL	EE
ASB	BKG	072286	PH		4.7000	PH	FD
ASB	BKG	072286	PH		4.7000	PH	FD
ASB	BKG	072286	PH		5.1600	PH	EE
ASB	BKG	072286	PH		5.1300	PH	EE
ASB	BKG	072286	PHENOLS	LT	2.0000	UGL	EE
ASB	BKG	072286	PHENOLS	LT	2.0000	UGL	EE
ASB	BKG	072286	SULFATE	LT	5000.0000	UGL	EE
ASB	BKG	072286	1,1,2,2-TETRACHLOROETHANE	LT	10.0000	UGL	EE
ASB	BKG	072286	TETRACHLOROETHYLENE	LT	5.0000	UGL	EE
ASB	BKG	072286	TOTAL ORGANIC CARBON	LT	1000.0000	UGL	EE
ASB	BKG	072286	TOTAL ORGANIC CARBON	LT	1000.0000	UGL	EE
ASB	BKG	072286	TOTAL ORGANIC CARBON	LT	1000.0000	UGL	EE
ASB	BKG	072286	TOTAL ORGANIC CARBON	LT	1000.0000	UGL	EE
ASB	BKG	072286	TOTAL RADIUM		0.9000	PCL	RM

ASB	BKG	072286	TOTAL ORGANIC HALOGENS	LT	5.0000	UGL	EE
ASB	BKG	072286	TOTAL ORGANIC HALOGENS	LT	5.0000	UGL	EE
ASB	BKG	072286	TOTAL ORGANIC HALOGENS	LT	5.0000	UGL	EE
ASB	BKG	072286	TOTAL ORGANIC HALOGENS	LT	5.0000	UGL	EE
ASB	BKG	072286	TOTAL PHOSPHATES		39.0000	UGL	EE
ASB	BKG	072286	TRICHLOROETHYLENE	LT	5.0000	UGL	EE
ASB	BKG	072286	TRANS-1,2-DICHLOROETHENE	LT	5.0000	UGL	EE
ASB	BKG	072286	URANIUM	LT	50.0000	UGL	EE
ASB	BKG	072286	URANIUM	LT	50.0000	UGL	EE
ASB	BKG	072286	1,1-DICHLOROETHYLENE	LT	5.0000	UGL	EE
ASB	BKG	072286	1,1-DICHLOROETHANE	LT	5.0000	UGL	EE
ASB	BKG	072286	1,1,1-TRICHLOROETHANE	LT	5.0000	UGL	EE
ASB	BKG	072286	1,1,2-TRICHLOROETHANE	LT	5.0000	UGL	EE
ASB	BKG	072286	1,2-DICHLOROETHANE-D4		44.0000	UGL	EE
ASB	BKG	072286	1,2-DICHLOROETHANE	LT	1.0000	UGL	EE
ASB	BKG	072286	1,2-DICHLOROPROPANE	LT	10.0000	UGL	EE
ASB	BKG	072286	CIS-1,3-DICHLOROPROPENE	LT	5.0000	UGL	EE
ASB	BKG	072286	TRANS-1,3-DICHLOROPROPENE	LT	5.0000	UGL	EE
ASB	BKG	072286	2-CHLOROETHYLVINYL ETHER	LT	10.0000	UGL	EE
ASB	BKG	072286	ZINC		13.0000	UGL	EE
ASB	BKG	072286	ZINC		18.0000	UGL	EE
ASB	BKG	110286	SILVER	LT	2.0000	UGL	EE
ASB	BKG	110286	SILVER	LT	2.0000	UGL	EE
ASB	BKG	110286	ALUMINUM		30.0000	UGL	EE
ASB	BKG	110286	ALUMINUM		36.0000	UGL	EE
ASB	BKG	110286	GROSS ALPHA	LT	3.0000	PCL	RM
ASB	BKG	110286	BARIUM	LT	4.0000	UGL	EE
ASB	BKG	110286	BARIUM	LT	4.0000	UGL	EE
ASB	BKG	110286	BERYLLIUM	LT	1.0000	UGL	EE
ASB	BKG	110286	BERYLLIUM	LT	1.0000	UGL	EE
ASB	BKG	110286	NONVOLATILE BETA	LT	2.0000	PCL	RM
ASB	BKG	110286	BROMODICHLOROMETHANE	LT	5.0000	UGL	EE
ASB	BKG	110286	CALCIUM		907.0000	UGL	EE
ASB	BKG	110286	CALCIUM		1060.0000	UGL	EE
ASB	BKG	110286	TRICHLOROFLUOROMETHANE	LT	5.0000	UGL	EE
ASB	BKG	110286	CARBON TETRACHLORIDE	LT	5.0000	UGL	EE
ASB	BKG	110286	CADMIUM	LT	2.0000	UGL	EE
ASB	BKG	110286	CADMIUM	LT	2.0000	UGL	EE
ASB	BKG	110286	BROMOFORM	LT	10.0000	UGL	EE
ASB	BKG	110286	CHLOROFORM	LT	5.0000	UGL	EE
ASB	BKG	110286	BROMOMETHANE	LT	10.0000	UGL	EE
ASB	BKG	110286	CHLOROMETHANE	LT	10.0000	UGL	EE
ASB	BKG	110286	CHLORIDE		3400.0000	UGL	EE
ASB	BKG	110286	CHLOROBENZENE	LT	5.0000	UGL	EE
ASB	BKG	110286	SPECIFIC CONDUCTANCE		32.0000	UMHC	FD
ASB	BKG	110286	SPECIFIC CONDUCTANCE		32.0000	UMHC	FD
ASB	BKG	110286	CHROMIUM	LT	4.0000	UGL	EE
ASB	BKG	110286	CHROMIUM	LT	4.0000	UGL	EE
ASB	BKG	110286	COPPER		5.0000	UGL	EE
ASB	BKG	110286	COPPER		14.0000	UGL	EE
ASB	BKG	110286	CYANIDE	LT	5.0000	UGL	EE
ASB	BKG	110286	CHLOROETHENE	LT	10.0000	UGL	EE
ASB	BKG	110286	CHLOROETHANE	LT	10.0000	UGL	EE
ASB	BKG	110286	BENZENE	LT	5.0000	UGL	EE
ASB	BKG	110286	DIBROMOCHLOROMETHANE	LT	5.0000	UGL	EE
ASB	BKG	110286	ETHYLBENZENE	LT	5.0000	UGL	EE
ASB	BKG	110286	FLUORIDE	LT	100.0000	UGL	EE
ASB	BKG	110286	IRON		33.0000	UGL	EE
ASB	BKG	110286	IRON		34.0000	UGL	EE
ASB	BKG	110286	MERCURY	LT	0.2000	UGL	EE
ASB	BKG	110286	MERCURY	LT	0.2000	UGL	EE
ASB	BKG	110286	MERCURY	LT	0.2000	UGL	EE
ASB	BKG	110286	TOLUENE-D8		97.6000	PER	EE
ASB	BKG	110286	TOLUENE	LT	5.0000	UGL	EE

Raw Background Data

ASB	BKG	110286	MAGNESIUM		480.0000	UGL	EE
ASB	BKG	110286	MAGNESIUM		490.0000	UGL	EE
ASB	BKG	110286	MANGANESE		21.0000	UGL	EE
ASB	BKG	110286	MANGANESE		21.0000	UGL	EE
ASB	BKG	110286	SODIUM		1680.0000	UGL	EE
ASB	BKG	110286	SODIUM		1770.0000	UGL	EE
ASB	BKG	110286	NICKEL	LT	4.0000	UGL	EE
ASB	BKG	110286	NICKEL	LT	4.0000	UGL	EE
ASB	BKG	110286	NITRATE AS NITROGEN		1170.0000	UGL	EE
ASB	BKG	110286	LEAD		15.0000	UGL	EE
ASB	BKG	110286	LEAD		19.0000	UGL	EE
ASB	BKG	110286	P-BROMOFLUOROBENZENE		92.2000	PER	EE
ASB	BKG	110286	PH		3.9000	PH	FD
ASB	BKG	110286	PH		3.9000	PH	FD
ASB	BKG	110286	PHENOLS	LT	2.0000	UGL	EE
ASB	BKG	110286	ANTIMONY	LT	3.0000	UGL	EE
ASB	BKG	110286	ANTIMONY	LT	3.0000	UGL	EE
ASB	BKG	110286	SULFATE	LT	3000.0000	UGL	EE
ASB	BKG	110286	1,1,2,2-TETRACHLOROETHANE	LT	10.0000	UGL	EE
ASB	BKG	110286	TETRACHLOROETHYLENE	LT	5.0000	UGL	EE
ASB	BKG	110286	TOTAL ORGANIC CARBON		2500.0000	UGL	EE
ASB	BKG	110286	TOTAL ORGANIC CARBON		2300.0000	UGL	EE
ASB	BKG	110286	TOTAL ORGANIC CARBON	LT	1000.0000	UGL	EE
ASB	BKG	110286	TOTAL ORGANIC CARBON		2400.0000	UGL	EE
ASB	BKG	110286	TOTAL RADIUM	LT	1.0000	PCL	RM
ASB	BKG	110286	TOTAL ORGANIC HALOGENS	LT	5.0000	UGL	EE
ASB	BKG	110286	TOTAL ORGANIC HALOGENS	LT	5.0000	UGL	EE
ASB	BKG	110286	TOTAL ORGANIC HALOGENS	LT	5.0000	UGL	EE
ASB	BKG	110286	TOTAL ORGANIC HALOGENS	LT	5.0000	UGL	EE
ASB	BKG	110286	TOTAL PHOSPHATES		37.0000	UGL	EE
ASB	BKG	110286	TOTAL PHOSPHATES		42.0000	UGL	EE
ASB	BKG	110286	TRICHLOROETHYLENE	LT	5.0000	UGL	EE
ASB	BKG	110286	TRANS-1,2-DICHLOROETHENE	LT	5.0000	UGL	EE
ASB	BKG	110286	1,1-DICHLOROETHYLENE	LT	5.0000	UGL	EE
ASB	BKG	110286	1,1-DICHLOROETHANE	LT	5.0000	UGL	EE
ASB	BKG	110286	1,1,1-TRICHLOROETHANE	LT	5.0000	UGL	EE
ASB	BKG	110286	1,1,2-TRICHLOROETHANE	LT	5.0000	UGL	EE
ASB	BKG	110286	1,2-DICHLOROETHANE-D4		103.4000	PER	EE
ASB	BKG	110286	1,2-DICHLOROETHANE	LT	1.0000	UGL	EE
ASB	BKG	110286	1,2-DICHLOROPROPANE	LT	10.0000	UGL	EE
ASB	BKG	110286	CIS-1,3-DICHLOROPROPENE	LT	5.0000	UGL	EE
ASB	BKG	110286	TRANS-1,3-DICHLOROPROPENE	LT	5.0000	UGL	EE
ASB	BKG	110286	2-CHLOROETHYLVINYL ETHER	LT	10.0000	UGL	EE
ASB	BKG	110286	ZINC		8.0000	UGL	EE
ASB	BKG	110286	ZINC		8.0000	UGL	EE
ASB	BKG	012987	SILVER	LT	2.0000	UGL	EE
ASB	BKG	012987	SILVER	LT	2.0000	UGL	EE
ASB	BKG	012987	SILVER	LT	2.0000	UGL	EE
ASB	BKG	012987	ALUMINUM		31.0000	UGL	EE
ASB	BKG	012987	ALUMINUM		36.0000	UGL	EE
ASB	BKG	012987	ALUMINUM		39.0000	UGL	EE
ASB	BKG	012987	GROSS ALPHA		1.2000	PCL	RM
ASB	BKG	012987	GROSS ALPHA		1.2000	PCL	RM
ASB	BKG	012987	ARSENIC	LT	2.0000	UGL	EE
ASB	BKG	012987	ARSENIC	LT	2.0000	UGL	EE
ASB	BKG	012987	BARIUM		4.0000	UGL	EE
ASB	BKG	012987	BARIUM		4.0000	UGL	EE
ASB	BKG	012987	BARIUM	LT	4.0000	UGL	EE
ASB	BKG	012987	BERYLLIUM	LT	1.0000	UGL	EE
ASB	BKG	012987	BERYLLIUM	LT	1.0000	UGL	EE
ASB	BKG	012987	BERYLLIUM	LT	1.0000	UGL	EE
ASB	BKG	012987	NONVOLATILE BETA	LT	2.0000	PCL	RM
ASB	BKG	012987	NONVOLATILE BETA		2.7000	PCL	RM
ASB	BKG	012987	CALCIUM		914.0000	UGL	EE

Raw Background Data

ASB	BKG	012987	CALCIUM		875.0000	UGL	EE
ASB	BKG	012987	CALCIUM		840.0000	UGL	EE
ASB	BKG	012987	CARBON TETRACHLORIDE	LT	1.0000	UGL	EE
ASB	BKG	012987	CARBON TETRACHLORIDE	LT	1.0000	UGL	EE
ASB	BKG	012987	CADMIUM	LT	2.0000	UGL	EE
ASB	BKG	012987	CADMIUM	LT	2.0000	UGL	EE
ASB	BKG	012987	CADMIUM	LT	2.0000	UGL	EE
ASB	BKG	012987	CHLOROFORM	LT	1.0000	UGL	EE
ASB	BKG	012987	CHLOROFORM	LT	1.0000	UGL	EE
ASB	BKG	012987	CHLORIDE		2900.0000	UGL	EE
ASB	BKG	012987	SPECIFIC CONDUCTANCE		28.0000	UMHC	FD
ASB	BKG	012987	SPECIFIC CONDUCTANCE		28.0000	UMHC	FD
ASB	BKG	012987	SPECIFIC CONDUCTANCE		23.7000	UMHC	EE
ASB	BKG	012987	SPECIFIC CONDUCTANCE		23.6000	UMHC	EE
ASB	BKG	012987	CHROMIUM	LT	4.0000	UGL	EE
ASB	BKG	012987	CHROMIUM	LT	4.0000	UGL	EE
ASB	BKG	012987	CHROMIUM	LT	4.0000	UGL	EE
ASB	BKG	012987	COPPER	LT	4.0000	UGL	EE
ASB	BKG	012987	COPPER	LT	4.0000	UGL	EE
ASB	BKG	012987	COPPER	LT	4.0000	UGL	EE
ASB	BKG	012987	CYANIDE	LT	5.0000	UGL	EE
ASB	BKG	012987	ENDRIN	LT	0.1000	UGL	EE
ASB	BKG	012987	FLUORIDE		100.0000	UGL	EE
ASB	BKG	012987	FLUORIDE	LT	100.0000	UGL	EE
ASB	BKG	012987	IRON		31.0000	UGL	EE
ASB	BKG	012987	IRON		32.0000	UGL	EE
ASB	BKG	012987	MERCURY	LT	0.2000	UGL	EE
ASB	BKG	012987	MERCURY	LT	0.2000	UGL	EE
ASB	BKG	012987	MERCURY	LT	0.2000	UGL	EE
ASB	BKG	012987	POTASSIUM		169.0000	UGL	EE
ASB	BKG	012987	POTASSIUM		98.0000	UGL	EE
ASB	BKG	012987	POTASSIUM		108.0000	UGL	EE
ASB	BKG	012987	LINDANE	LT	0.0500	UGL	EE
ASB	BKG	012987	METHOXYCHLOR	LT	0.5000	UGL	EE
ASB	BKG	012987	MAGNESIUM		505.0000	UGL	EE
ASB	BKG	012987	MAGNESIUM		472.0000	UGL	EE
ASB	BKG	012987	MAGNESIUM		466.0000	UGL	EE
ASB	BKG	012987	MANGANESE		20.0000	UGL	EE
ASB	BKG	012987	MANGANESE		19.0000	UGL	EE
ASB	BKG	012987	MANGANESE		19.0000	UGL	EE
ASB	BKG	012987	SODIUM		2040.0000	UGL	EE
ASB	BKG	012987	SODIUM		1990.0000	UGL	EE
ASB	BKG	012987	SODIUM		1940.0000	UGL	EE
ASB	BKG	012987	NICKEL	LT	4.0000	UGL	EE
ASB	BKG	012987	NICKEL	LT	4.0000	UGL	EE
ASB	BKG	012987	NICKEL	LT	4.0000	UGL	EE
ASB	BKG	012987	NITRATE AS NITROGEN		1200.0000	UGL	EE
ASB	BKG	012987	LEAD		8.0000	UGL	EE
ASB	BKG	012987	LEAD		7.0000	UGL	EE
ASB	BKG	012987	LEAD		11.0000	UGL	EE
ASB	BKG	012987	PH		4.4000	PH	FD
ASB	BKG	012987	PH		4.4000	PH	FD
ASB	BKG	012987	PH		4.5200	PH	EE
ASB	BKG	012987	PH		4.5000	PH	EE
ASB	BKG	012987	PHENOLS	LT	2.0000	UGL	EE
ASB	BKG	012987	ANTIMONY	LT	3.0000	UGL	EE
ASB	BKG	012987	ANTIMONY	LT	3.0000	UGL	EE
ASB	BKG	012987	SELENIUM	LT	2.0000	UGL	EE
ASB	BKG	012987	SELENIUM	LT	2.0000	UGL	EE
ASB	BKG	012987	SILICA		3520.0000	UGL	EE
ASB	BKG	012987	SILVEX	LT	2.0000	UGL	EE
ASB	BKG	012987	SULFATE	LT	3000.0000	UGL	EE
ASB	BKG	012987	TETRACHLOROETHYLENE	LT	1.0000	UGL	EE
ASB	BKG	012987	TETRACHLOROETHYLENE	LT	1.0000	UGL	EE

Raw Background Data

ASB	BKG	012987	TOTAL DISSOLVED SOLIDS		32000.0000	UGL	EE
ASB	BKG	012987	TOTAL ORGANIC CARBON	LT	1000.0000	UGL	EE
ASB	BKG	012987	TOTAL ORGANIC CARBON	LT	1000.0000	UGL	EE
ASB	BKG	012987	TOTAL ORGANIC CARBON	LT	1000.0000	UGL	EE
ASB	BKG	012987	TOTAL ORGANIC CARBON	LT	1000.0000	UGL	EE
ASB	BKG	012987	TOTAL RADIUM	LT	1.0000	PCL	RM
ASB	BKG	012987	TOTAL RADIUM	LT	1.0000	PCL	RM
ASB	BKG	012987	TOTAL ORGANIC HALOGENS	LT	5.0000	UGL	EE
ASB	BKG	012987	TOTAL ORGANIC HALOGENS	LT	5.0000	UGL	EE
ASB	BKG	012987	TOTAL ORGANIC HALOGENS	LT	5.0000	UGL	EE
ASB	BKG	012987	TOTAL ORGANIC HALOGENS	LT	5.0000	UGL	EE
ASB	BKG	012987	TOTAL PHOSPHATES		40.0000	UGL	EE
ASB	BKG	012987	TRICHLOROETHYLENE	LT	1.0000	UGL	EE
ASB	BKG	012987	TRICHLOROETHYLENE	LT	1.0000	UGL	EE
ASB	BKG	012987	TRITIUM		1.6900	PCML	RM
ASB	BKG	012987	TRITIUM		1.6800	PCML	RM
ASB	BKG	012987	TOXAPHENE	LT	1.0000	UGL	EE
ASB	BKG	012987	URANIUM	LT	100.0000	UGL	EE
ASB	BKG	012987	URANIUM	LT	100.0000	UGL	EE
ASB	BKG	012987	URANIUM	LT	100.0000	UGL	EE
ASB	BKG	012987	1,1,1-TRICHLOROETHANE	LT	1.0000	UGL	EE
ASB	BKG	012987	1,1,1-TRICHLOROETHANE	LT	1.0000	UGL	EE
ASB	BKG	012987	2,4-DICHLOROPHENOXYACETIC ACID	LT	20.0000	UGL	EE
ASB	BKG	012987	ZINC		11.0000	UGL	EE
ASB	BKG	012987	ZINC		9.0000	UGL	EE
ASB	BKG	012987	ZINC		6.0000	UGL	EE
ASB	BKG	040687	ALUMINUM		43.0000	UGL	EE
ASB	BKG	040687	GROSS ALPHA	LT	3.0000	PCL	RM
ASB	BKG	040687	ARSENIC	LT	2.0000	UGL	EE
ASB	BKG	040687	NONVOLATILE BETA		1.8000	PCL	RM
ASB	BKG	040687	BROMODICHLOROMETHANE	LT	5.0000	UGL	EE
ASB	BKG	040687	TRICHLOROFLUOROMETHANE	LT	5.0000	UGL	EE
ASB	BKG	040687	CARBON TETRACHLORIDE	LT	1.0000	UGL	EE
ASB	BKG	040687	CARBON TETRACHLORIDE	LT	1.0000	UGL	EE
ASB	BKG	040687	CARBON TETRACHLORIDE	LT	5.0000	UGL	EE
ASB	BKG	040687	BROMOFORM	LT	10.0000	UGL	EE
ASB	BKG	040687	CHLOROFORM	LT	1.0000	UGL	EE
ASB	BKG	040687	CHLOROFORM	LT	1.0000	UGL	EE
ASB	BKG	040687	CHLOROFORM	LT	5.0000	UGL	EE
ASB	BKG	040687	BROMOMETHANE	LT	10.0000	UGL	EE
ASB	BKG	040687	CHLOROMETHANE	LT	10.0000	UGL	EE
ASB	BKG	040687	CHLOROBENZENE	LT	5.0000	UGL	EE
ASB	BKG	040687	SPECIFIC CONDUCTANCE		22.0000	UMHC	FD
ASB	BKG	040687	SPECIFIC CONDUCTANCE		23.5000	UMHC	EE
ASB	BKG	040687	SPECIFIC CONDUCTANCE		23.8000	UMHC	EE
ASB	BKG	040687	SPECIFIC CONDUCTANCE		23.8000	UMHC	EE
ASB	BKG	040687	CHLOROETHENE	LT	10.0000	UGL	EE
ASB	BKG	040687	CHLOROETHANE	LT	10.0000	UGL	EE
ASB	BKG	040687	BENZENE	LT	5.0000	UGL	EE
ASB	BKG	040687	DIBROMOCHLOROMETHANE	LT	5.0000	UGL	EE
ASB	BKG	040687	ENDRIN	LT	0.1000	UGL	EE
ASB	BKG	040687	ETHYLBENZENE	LT	5.0000	UGL	EE
ASB	BKG	040687	FECAL COLIFORM	LT	2.0000		DA
ASB	BKG	040687	LINDANE	LT	0.0500	UGL	EE
ASB	BKG	040687	TOLUENE-D8		106.0000	PER	EE
ASB	BKG	040687	TOLUENE	LT	5.0000	UGL	EE
ASB	BKG	040687	METHOXYCHLOR	LT	0.5000	UGL	EE
ASB	BKG	040687	SODIUM		1750.0000	UGL	EE
ASB	BKG	040687	NICKEL	LT	4.0000	UGL	EE
ASB	BKG	040687	NITRATE AS NITROGEN		1160.0000	UGL	EE
ASB	BKG	040687	LEAD		12.0000	UGL	EE
ASB	BKG	040687	P-BROMOFLUOROBENZENE		95.6000	PER	EE
ASB	BKG	040687	PH		5.1000	PH	FD
ASB	BKG	040687	PH		5.1200	PH	EE

Raw Background Data

ASB	BKG	040687	PH		5.0900	PH	EE
ASB	BKG	040687	PH		5.0900	PH	EE
ASB	BKG	040687	SELENIUM	LT	2.0000	UGL	EE
ASB	BKG	040687	SILVEX	LT	0.0900	UGL	EE
ASB	BKG	040687	1,1,2,2-TETRACHLOROETHANE	LT	10.0000	UGL	EE
ASB	BKG	040687	TETRACHLOROETHYLENE	LT	1.0000	UGL	EE
ASB	BKG	040687	TETRACHLOROETHYLENE	LT	1.0000	UGL	EE
ASB	BKG	040687	TETRACHLOROETHYLENE	LT	5.0000	UGL	EE
ASB	BKG	040687	TOTAL DISSOLVED SOLIDS		20000.0000	UGL	EE
ASB	BKG	040687	TOTAL DISSOLVED SOLIDS		24000.0000	UGL	EE
ASB	BKG	040687	TOTAL DISSOLVED SOLIDS		22000.0000	UGL	EE
ASB	BKG	040687	TOTAL DISSOLVED SOLIDS		20000.0000	UGL	EE
ASB	BKG	040687	TOTAL DISSOLVED SOLIDS		30000.0000	UGL	EE
ASB	BKG	040687	TOTAL ORGANIC CARBON	LT	1000.0000	UGL	EE
ASB	BKG	040687	TOTAL RADIUM	LT	1.0000	PCL	RM
ASB	BKG	040687	TOTAL ORGANIC HALOGENS	LT	5.0000	UGL	EE
ASB	BKG	040687	TOTAL PHOSPHATES	LT	20.0000	UGL	EE
ASB	BKG	040687	TRICHLOROETHYLENE	LT	1.0000	UGL	EE
ASB	BKG	040687	TRICHLOROETHYLENE	LT	1.0000	UGL	EE
ASB	BKG	040687	TRICHLOROETHYLENE	LT	5.0000	UGL	EE
ASB	BKG	040687	TURBIDITY	LT	0.1000	TU	EE
ASB	BKG	040687	TURBIDITY	LT	0.1000	TU	EE
ASB	BKG	040687	TURBIDITY	LT	0.1000	TU	EE
ASB	BKG	040687	TURBIDITY	LT	0.1000	TU	EE
ASB	BKG	040687	TURBIDITY	LT	0.1000	TU	EE
ASB	BKG	040687	TOXAPHENE	LT	1.0000	UGL	EE
ASB	BKG	040687	TRANS-1,2-DICHLOROETHENE	LT	5.0000	UGL	EE
ASB	BKG	040687	URANIUM	LT	100.0000	UGL	EE
ASB	BKG	040687	1,1-DICHLOROETHYLENE	LT	5.0000	UGL	EE
ASB	BKG	040687	1,1-DICHLOROETHANE	LT	5.0000	UGL	EE
ASB	BKG	040687	1,1,1-TRICHLOROETHANE	LT	1.0000	UGL	EE
ASB	BKG	040687	1,1,1-TRICHLOROETHANE	LT	1.0000	UGL	EE
ASB	BKG	040687	1,1,1-TRICHLOROETHANE	LT	5.0000	UGL	EE
ASB	BKG	040687	1,1,2-TRICHLOROETHANE	LT	5.0000	UGL	EE
ASB	BKG	040687	1,2-DICHLOROETHANE-D4		99.8000	PER	EE
ASB	BKG	040687	1,2-DICHLOROETHANE	LT	1.0000	UGL	EE
ASB	BKG	040687	1,2-DICHLOROPROPANE	LT	10.0000	UGL	EE
ASB	BKG	040687	CIS-1,3-DICHLOROPROPENE	LT	5.0000	UGL	EE
ASB	BKG	040687	TRANS-1,3-DICHLOROPROPENE	LT	5.0000	UGL	EE
ASB	BKG	040687	2-CHLOROETHYLVINYL ETHER	LT	10.0000	UGL	EE
ASB	BKG	040687	2,4-DICHLOROPHENOXYACETIC ACID	LT	0.3000	UGL	EE
ASB	BKG	080487	ALUMINUM		66.0000	UGL	EE
ASB	BKG	080487	GROSS ALPHA	LT	3.0000	PCL	RM
ASB	BKG	080487	ARSENIC	LT	2.0000	UGL	EE
ASB	BKG	080487	BARIUM		5.0000	UGL	EE
ASB	BKG	080487	NONVOLATILE BETA	LT	2.0000	PCL	RM
ASB	BKG	080487	BROMODICHLOROMETHANE	LT	5.0000	UGL	EE
ASB	BKG	080487	TRICHLOROFLUOROMETHANE	LT	5.0000	UGL	EE
ASB	BKG	080487	CARBON TETRACHLORIDE	LT	1.0000	UGL	EE
ASB	BKG	080487	CARBON TETRACHLORIDE	LT	5.0000	UGL	EE
ASB	BKG	080487	BROMOFORM	LT	10.0000	UGL	EE
ASB	BKG	080487	CHLOROFORM	LT	1.0000	UGL	EE
ASB	BKG	080487	CHLOROFORM	LT	5.0000	UGL	EE
ASB	BKG	080487	BROMOMETHANE	LT	10.0000	UGL	EE
ASB	BKG	080487	CHLOROMETHANE	LT	10.0000	UGL	EE
ASB	BKG	080487	CHLORIDE		3000.0000	UGL	EE
ASB	BKG	080487	CHLOROBENZENE	LT	5.0000	UGL	EE
ASB	BKG	080487	SPECIFIC CONDUCTANCE		26.0000	UMHC	FD
ASB	BKG	080487	CHROMIUM	LT	4.0000	UGL	EE
ASB	BKG	080487	COPPER		8.0000	UGL	EE
ASB	BKG	080487	CYANIDE	LT	5.0000	UGL	EE
ASB	BKG	080487	CHLOROETHENE	LT	10.0000	UGL	EE
ASB	BKG	080487	CHLOROETHANE	LT	10.0000	UGL	EE
ASB	BKG	080487	BENZENE	LT	5.0000	UGL	EE

ASB	BKG	080487	DIBROMOCHLOROMETHANE	LT	5.0000	UGL	EE
ASB	BKG	080487	ENDRIN	LT	0.1000	UGL	EE
ASB	BKG	080487	ETHYLBENZENE	LT	5.0000	UGL	EE
ASB	BKG	080487	IRON		32.0000	UGL	EE
ASB	BKG	080487	FECAL COLIFORM	LT	2.0000		DA
ASB	BKG	080487	LINDANE	LT	0.0500	UGL	EE
ASB	BKG	080487	TOLUENE-D8		96.8000	PER	EE
ASB	BKG	080487	TOLUENE	LT	5.0000	UGL	EE
ASB	BKG	080487	METHOXYCHLOR	LT	0.5000	UGL	EE
ASB	BKG	080487	MANGANESE		18.0000	UGL	EE
ASB	BKG	080487	SODIUM		1800.0000	UGL	EE
ASB	BKG	080487	NICKEL	LT	4.0000	UGL	EE
ASB	BKG	080487	NITRATE AS NITROGEN		1310.0000	UGL	EE
ASB	BKG	080487	LEAD		8.0000	UGL	EE
ASB	BKG	080487	P-BROMOFLUOROBENZENE		106.0000	PER	EE
ASB	BKG	080487	PH		5.4000	PH	FD
ASB	BKG	080487	PHENOLS	LT	5.0000	UGL	EE
ASB	BKG	080487	SELENIUM	LT	2.0000	UGL	EE
ASB	BKG	080487	SILVEX	LT	0.0900	UGL	EE
ASB	BKG	080487	SULFATE	LT	5000.0000	UGL	EE
ASB	BKG	080487	1,1,2,2-TETRACHLOROETHANE	LT	10.0000	UGL	EE
ASB	BKG	080487	TETRACHLOROETHYLENE	LT	1.0000	UGL	EE
ASB	BKG	080487	TETRACHLOROETHYLENE	LT	5.0000	UGL	EE
ASB	BKG	080487	TOTAL DISSOLVED SOLIDS		56000.0000	UGL	EE
ASB	BKG	080487	TOTAL ORGANIC CARBON	LT	1000.0000	UGL	EE
ASB	BKG	080487	TOTAL RADIUM		0.5000	PCL	RM
ASB	BKG	080487	TOTAL ORGANIC HALOGENS	LT	5.0000	UGL	EE
ASB	BKG	080487	TOTAL PHOSPHATES	LT	20.0000	UGL	EE
ASB	BKG	080487	TRICHLOROETHYLENE	LT	1.0000	UGL	EE
ASB	BKG	080487	TRICHLOROETHYLENE	LT	5.0000	UGL	EE
ASB	BKG	080487	TURBIDITY		0.9000	TU	EE
ASB	BKG	080487	TOXAPHENE	LT	1.0000	UGL	EE
ASB	BKG	080487	TRANS-1,2-DICHLOROETHENE	LT	5.0000	UGL	EE
ASB	BKG	080487	URANIUM	LT	1000.0000	UGL	EE
ASB	BKG	080487	1,1-DICHLOROETHYLENE	LT	5.0000	UGL	EE
ASB	BKG	080487	1,1-DICHLOROETHANE	LT	5.0000	UGL	EE
ASB	BKG	080487	1,1,1-TRICHLOROETHANE	LT	1.0000	UGL	EE
ASB	BKG	080487	1,1,1-TRICHLOROETHANE	LT	5.0000	UGL	EE
ASB	BKG	080487	1,1,2-TRICHLOROETHANE	LT	5.0000	UGL	EE
ASB	BKG	080487	1,2-DICHLOROETHANE-D4		100.0000	PER	EE
ASB	BKG	080487	1,2-DICHLOROETHANE	LT	1.0000	UGL	EE
ASB	BKG	080487	1,2-DICHLOROPROPANE	LT	10.0000	UGL	EE
ASB	BKG	080487	CIS-1,3-DICHLOROPROPENE	LT	5.0000	UGL	EE
ASB	BKG	080487	TRANS-1,3-DICHLOROPROPENE	LT	5.0000	UGL	EE
ASB	BKG	080487	2-CHLOROETHYLVINYL ETHER	LT	10.0000	UGL	EE
ASB	BKG	080487	2,4-DICHLOROPHENOXYACETIC ACID	LT	0.3000	UGL	EE
ASB	BKG	080487	ZINC		86.0000	UGL	EE
ASB	BKG	090687	SPECIFIC CONDUCTANCE		29.0000	UMHC	FD
ASB	BKG	090687	SPECIFIC CONDUCTANCE		21.2000	UMHC	EE
ASB	BKG	090687	SPECIFIC CONDUCTANCE		22.3000	UMHC	EE
ASB	BKG	090687	SPECIFIC CONDUCTANCE		21.5000	UMHC	EE
ASB	BKG	090687	SPECIFIC CONDUCTANCE		21.8000	UMHC	EE
ASB	BKG	090687	PH		4.5000	PH	FD
ASB	BKG	090687	PH		5.0700	PH	EE
ASB	BKG	090687	PH		5.0900	PH	EE
ASB	BKG	090687	PH		5.0700	PH	EE
ASB	BKG	090687	PH		5.0700	PH	EE
ASB	BKG	090687	TOTAL ORGANIC CARBON		17000.0000	UGL	EE
ASB	BKG	090687	TOTAL ORGANIC CARBON		2000.0000	UGL	EE
ASB	BKG	090687	TOTAL ORGANIC CARBON	LT	1000.0000	UGL	EE
ASB	BKG	090687	TOTAL ORGANIC CARBON	LT	1000.0000	UGL	EE
ASB	BKG	090687	TOTAL ORGANIC HALOGENS	LT	5.0000	UGL	EE
ASB	BKG	090687	TOTAL ORGANIC HALOGENS	LT	5.0000	UGL	EE
ASB	BKG	090687	TOTAL ORGANIC HALOGENS	LT	5.0000	UGL	EE

Raw Background Data

ASB	BKG	090687	TOTAL ORGANIC HALOGENS	LT	5.0000	UGL	EE
ASB	BKG	121987	ALUMINUM		79.0000	UGL	EE
ASB	BKG	121987	GROSS ALPHA		1.3000	PCL	EE
ASB	BKG	121987	ARSENIC	LT	2.0000	UGL	EE
ASB	BKG	121987	BARIUM		5.0000	UGL	EE
ASB	BKG	121987	NONVOLATILE BETA		3.2000	PCL	EE
ASB	BKG	121987	BROMODICHLOROMETHANE	LT	5.0000	UGL	EE
ASB	BKG	121987	TRICHLOROFLUOROMETHANE	LT	5.0000	UGL	EE
ASB	BKG	121987	CARBON TETRACHLORIDE	LT	1.0000	UGL	EE
ASB	BKG	121987	CARBON TETRACHLORIDE	LT	5.0000	UGL	EE
ASB	BKG	121987	BROMOFORM	LT	10.0000	UGL	EE
ASB	BKG	121987	CHLOROFORM	LT	1.0000	UGL	EE
ASB	BKG	121987	CHLOROFORM	LT	5.0000	UGL	EE
ASB	BKG	121987	BROMOMETHANE	LT	10.0000	UGL	EE
ASB	BKG	121987	CHLOROMETHANE	LT	10.0000	UGL	EE
ASB	BKG	121987	CHLORIDE		2400.0000	UGL	EE
ASB	BKG	121987	CHLOROBENZENE	LT	5.0000	UGL	EE
ASB	BKG	121987	SPECIFIC CONDUCTANCE		20.0000	UMHC	FD
ASB	BKG	121987	SPECIFIC CONDUCTANCE		24.3000	UMHC	EE
ASB	BKG	121987	SPECIFIC CONDUCTANCE		23.3000	UMHC	EE
ASB	BKG	121987	SPECIFIC CONDUCTANCE		26.7000	UMHC	EE
ASB	BKG	121987	SPECIFIC CONDUCTANCE		26.7000	UMHC	EE
ASB	BKG	121987	CHROMIUM	LT	4.0000	UGL	EE
ASB	BKG	121987	COPPER		5.0000	UGL	EE
ASB	BKG	121987	CYANIDE	LT	5.0000	UGL	EE
ASB	BKG	121987	CHLOROETHENE	LT	10.0000	UGL	EE
ASB	BKG	121987	CHLOROETHANE	LT	10.0000	UGL	EE
ASB	BKG	121987	BENZENE	LT	5.0000	UGL	EE
ASB	BKG	121987	DIBROMOCHLOROMETHANE	LT	5.0000	UGL	EE
ASB	BKG	121987	ENDRIN	LT	0.1000	UGL	EE
ASB	BKG	121987	ETHYLBENZENE	LT	5.0000	UGL	EE
ASB	BKG	121987	IRON		40.0000	UGL	EE
ASB	BKG	121987	LINDANE	LT	0.0500	UGL	EE
ASB	BKG	121987	TOLUENE-D8		99.0000	PER	EE
ASB	BKG	121987	TOLUENE	LT	5.0000	UGL	EE
ASB	BKG	121987	METHOXYCHLOR	LT	0.5000	UGL	EE
ASB	BKG	121987	MANGANESE		15.0000	UGL	EE
ASB	BKG	121987	SODIUM		1660.0000	UGL	EE
ASB	BKG	121987	NICKEL	LT	4.0000	UGL	EE
ASB	BKG	121987	NITRATE AS NITROGEN		1370.0000	UGL	EE
ASB	BKG	121987	LEAD		9.0000	UGL	EE
ASB	BKG	121987	P-BROMOFLUOROBENZENE		103.0000	PER	EE
ASB	BKG	121987	PH		4.6000	PH	FD
ASB	BKG	121987	PH		4.4900	PH	EE
ASB	BKG	121987	PH		4.8100	PH	EE
ASB	BKG	121987	PH		4.7100	PH	EE
ASB	BKG	121987	PH		4.7300	PH	EE
ASB	BKG	121987	PHENOLS	LT	5.0000	UGL	EE
ASB	BKG	121987	SELENIUM	LT	2.0000	UGL	EE
ASB	BKG	121987	SILVEX	LT	0.0900	UGL	EE
ASB	BKG	121987	TIN	LT	120.0000	UGL	EE
ASB	BKG	121987	SULFATE	LT	5000.0000	UGL	EE
ASB	BKG	121987	1,1,2,2-TETRACHLOROETHANE	LT	10.0000	UGL	EE
ASB	BKG	121987	TETRACHLOROETHYLENE	LT	1.0000	UGL	EE
ASB	BKG	121987	TETRACHLOROETHYLENE	LT	5.0000	UGL	EE
ASB	BKG	121987	TOTAL DISSOLVED SOLIDS		52000.0000	UGL	EE
ASB	BKG	121987	TOTAL ORGANIC CARBON	LT	1000.0000	UGL	EE
ASB	BKG	121987	TOTAL ORGANIC CARBON	LT	1000.0000	UGL	EE
ASB	BKG	121987	TOTAL ORGANIC CARBON	LT	1000.0000	UGL	EE
ASB	BKG	121987	TOTAL ORGANIC CARBON	LT	1000.0000	UGL	EE
ASB	BKG	121987	TOTAL ORGANIC CARBON	LT	1000.0000	UGL	EE
ASB	BKG	121987	TOTAL ORGANIC CARBON	LT	1000.0000	UGL	EE
ASB	BKG	121987	TOTAL ORGANIC CARBON	LT	1000.0000	UGL	EE
ASB	BKG	121987	TOTAL RADIUM		0.4000	PCL	EE

Raw Background Data

ASB	BKG	121987	TOTAL ORGANIC HALOGENS	LT	5.0000	UGL	EE
ASB	BKG	121987	TOTAL ORGANIC HALOGENS	LT	5.0000	UGL	EE
ASB	BKG	121987	TOTAL ORGANIC HALOGENS	LT	5.0000	UGL	EE
ASB	BKG	121987	TOTAL PHOSPHATES		100.0000	UGL	EE
ASB	BKG	121987	TRICHLOROETHYLENE	LT	1.0000	UGL	EE
ASB	BKG	121987	TRICHLOROETHYLENE	LT	5.0000	UGL	EE
ASB	BKG	121987	TURBIDITY		0.1210	NTU	EE
ASB	BKG	121987	TURBIDITY		0.1200	NTU	EE
ASB	BKG	121987	TOXAPHENE	LT	1.0000	UGL	EE
ASB	BKG	121987	TRANS-1,2-DICHLOROETHENE	LT	5.0000	UGL	EE
ASB	BKG	121987	URANIUM	LT	1000.0000	UGL	EE
ASB	BKG	121987	1,1-DICHLOROETHYLENE	LT	5.0000	UGL	EE
ASB	BKG	121987	1,1-DICHLOROETHANE	LT	5.0000	UGL	EE
ASB	BKG	121987	1,1,1-TRICHLOROETHANE	LT	1.0000	UGL	EE
ASB	BKG	121987	1,1,1-TRICHLOROETHANE	LT	5.0000	UGL	EE
ASB	BKG	121987	1,1,2-TRICHLOROETHANE	LT	5.0000	UGL	EE
ASB	BKG	121987	1,2-DICHLOROETHANE-D4		92.0000	PER	EE
ASB	BKG	121987	1,2-DICHLOROETHANE	LT	1.0000	UGL	EE
ASB	BKG	121987	1,2-DICHLOROPROPANE	LT	10.0000	UGL	EE
ASB	BKG	121987	CIS-1,3-DICHLOROPROPENE	LT	5.0000	UGL	EE
ASB	BKG	121987	TRANS-1,3-DICHLOROPROPENE	LT	5.0000	UGL	EE
ASB	BKG	121987	2-CHLOROETHYLVINYL ETHER	LT	10.0000	UGL	EE
ASB	BKG	121987	2,4-DICHLOROPHENOXYACETIC ACID	LT	0.3000	UGL	EE
ASB	BKG	121987	ZINC		17.0000	UGL	EE
ASB	BKG	022488	SILVER	LT	2.0000	UGL	EE
ASB	BKG	022488	ALUMINUM		61.0000	UGL	EE
ASB	BKG	022488	GROSS ALPHA	LT	3.0000	PCL	EE
ASB	BKG	022488	BARIUM		6.0000	UGL	EE
ASB	BKG	022488	NONVOLATILE BETA	LT	2.0000	PCL	EE
ASB	BKG	022488	CARBON TETRACHLORIDE	LT	1.0000	UGL	EE
ASB	BKG	022488	CHLOROFORM	LT	1.0000	UGL	EE
ASB	BKG	022488	CHLORIDE		2000.0000	UGL	EE
ASB	BKG	022488	SPECIFIC CONDUCTANCE		27.0000	UMHC	FD
ASB	BKG	022488	COPPER		6.0000	UGL	EE
ASB	BKG	022488	SODIUM		1760.0000	UGL	EE
ASB	BKG	022488	NICKEL	LT	4.0000	UGL	EE
ASB	BKG	022488	NITRATE AS NITROGEN		1240.0000	UGL	EE
ASB	BKG	022488	LEAD		8.0000	UGL	EE
ASB	BKG	022488	PH		4.9000	PH	FD
ASB	BKG	022488	PHENOLS	LT	5.0000	UGL	EE
ASB	BKG	022488	TIN		180.0000	UGL	EE
ASB	BKG	022488	TIN		250.0000	UGL	EE
ASB	BKG	022488	TETRACHLOROETHYLENE	LT	1.0000	UGL	EE
ASB	BKG	022488	TOTAL DISSOLVED SOLIDS		18000.0000	UGL	EE
ASB	BKG	022488	TOTAL ORGANIC CARBON	LT	1000.0000	UGL	EE
ASB	BKG	022488	TOTAL ORGANIC CARBON	LT	1000.0000	UGL	EE
ASB	BKG	022488	TOTAL RADIUM	LT	1.0000	PCL	EE
ASB	BKG	022488	TRICHLOROETHYLENE	LT	1.0000	UGL	EE
ASB	BKG	022488	1,1,1-TRICHLOROETHANE	LT	1.0000	UGL	EE
ASB	BKG	051188	SILVER	LT	2.0000	UGL	EE
ASB	BKG	051188	ALUMINUM		314.0000	UGL	EE
ASB	BKG	051188	ARSENIC	LT	2.0000	UGL	EE
ASB	BKG	051188	BARIUM	LT	4.0000	UGL	EE
ASB	BKG	051188	BROMODICHLOROMETHANE	LT	5.0000	UGL	EE
ASB	BKG	051188	TRICHLOROFLUOROMETHANE	LT	5.0000	UGL	EE
ASB	BKG	051188	CARBON TETRACHLORIDE	LT	5.0000	UGL	EE
ASB	BKG	051188	CADMIUM	LT	2.0000	UGL	EE
ASB	BKG	051188	BROMOFORM	LT	10.0000	UGL	EE
ASB	BKG	051188	CHLOROFORM	LT	5.0000	UGL	EE
ASB	BKG	051188	BROMOMETHANE	LT	10.0000	UGL	EE
ASB	BKG	051188	CHLOROMETHANE	LT	10.0000	UGL	EE
ASB	BKG	051188	CHLORIDE		2000.0000	UGL	EE
ASB	BKG	051188	CHLOROBENZENE	LT	5.0000	UGL	EE
ASB	BKG	051188	SPECIFIC CONDUCTANCE		24.0000	UMHC	FD

ASB	BKG	051188	SPECIFIC CONDUCTANCE		21.3000	UMHC	EE
ASB	BKG	051188	CHROMIUM	LT	4.0000	UGL	EE
ASB	BKG	051188	COPPER		5.0000	UGL	EE
ASB	BKG	051188	CYANIDE	LT	5.0000	UGL	EE
ASB	BKG	051188	CHLOROETHENE	LT	10.0000	UGL	EE
ASB	BKG	051188	CHLOROETHANE	LT	10.0000	UGL	EE
ASB	BKG	051188	BENZENE	LT	5.0000	UGL	EE
ASB	BKG	051188	DIBROMOCHLOROMETHANE	LT	5.0000	UGL	EE
ASB	BKG	051188	ETHYLBENZENE	LT	5.0000	UGL	EE
ASB	BKG	051188	MERCURY	LT	0.2000	UGL	EE
ASB	BKG	051188	TOLUENE-D8		101.0000	PER	EE
ASB	BKG	051188	TOLUENE	LT	5.0000	UGL	EE
ASB	BKG	051188	SODIUM		1680.0000	UGL	EE
ASB	BKG	051188	NICKEL	LT	4.0000	UGL	EE
ASB	BKG	051188	NITRATE AS NITROGEN		880.0000	UGL	EE
ASB	BKG	051188	LEAD		9.0000	UGL	EF
ASB	BKG	051188	P-BROMOFLUOROBENZENE		98.0000	PER	EE
ASB	BKG	051188	PH		4.8000	PH	FD
ASB	BKG	051188	PH		4.8600	PH	EE
ASB	BKG	051188	PHENOLS	LT	5.0000	UGL	EE
ASB	BKG	051188	SELENIUM	LT	2.0000	UGL	EE
ASB	BKG	051188	TIN	LT	120.0000	UGL	EE
ASB	BKG	051188	TIN	LT	120.0000	UGL	EE
ASB	BKG	051188	SULFATE	LT	5000.0000	UGL	EE
ASB	BKG	051188	1,1,2,2-TETRACHLOROETHANE	LT	10.0000	UGL	EE
ASB	BKG	051188	TETRACHLOROETHYLENE	LT	5.0000	UGL	EE
ASB	BKG	051188	TOTAL DISSOLVED SOLIDS		26000.0000	UGL	EE
ASB	BKG	051188	TOTAL RADIUM	LT	1.0000	PCL	EE
ASB	BKG	051188	TOTAL RADIUM	LT	1.0000	PCL	EE
ASB	BKG	051188	TOTAL PHOSPHATES		40.0000	UGL	EE
ASB	BKG	051188	TRICHLOROETHYLENE	LT	5.0000	UGL	EE
ASB	BKG	051188	TRANS-1,2-DICHLOROETHENE	LT	5.0000	UGL	EE
ASB	BKG	051188	URANIUM	LT	1000.0000	UGL	EE
ASB	BKG	051188	1,1-DICHLOROETHYLENE	LT	5.0000	UGL	EE
ASB	BKG	051188	1,1-DICHLOROETHANE	LT	5.0000	UGL	EE
ASB	BKG	051188	1,1,1-TRICHLOROETHANE	LT	5.0000	UGL	EE
ASB	BKG	051188	1,1,2-TRICHLOROETHANE	LT	5.0000	UGL	EE
ASB	BKG	051188	1,2-DICHLOROETHANE-D4		94.0000	PER	EE
ASB	BKG	051188	1,2-DICHLOROETHANE	LT	1.0000	UGL	EE
ASB	BKG	051188	1,2-DICHLOROPROPANE	LT	10.0000	UGL	EE
ASB	BKG	051188	CIS-1,3-DICHLOROPROPENE	LT	5.0000	UGL	EE
ASB	BKG	051188	TRANS-1,3-DICHLOROPROPENE	LT	5.0000	UGL	EE
ASB	BKG	051188	2-CHLOROETHYLVINYL ETHER	LT	10.0000	UGL	EE
ASB	BKG	051188	ZINC		11.0000	UGL	EE
ASB	BKG	081388	SILVER	LT	2.0000	UGL	EE
ASB	BKG	081388	ALUMINUM		42.0000	UGL	EE
ASB	BKG	081388	ARSENIC	LT	2.0000	UGL	EE
ASB	BKG	081388	BARIUM	LT	4.0000	UGL	EE
ASB	BKG	081388	CARBON TETRACHLORIDE	LT	1.0000	UGL	EE
ASB	BKG	081388	CADMIUM	LT	2.0000	UGL	EE
ASB	BKG	081388	CHLOROFORM	LT	1.0000	UGL	EE
ASB	BKG	081388	CHLORIDE		2400.0000	UGL	EE
ASB	BKG	081388	SPECIFIC CONDUCTANCE		25.0000	UMHC	FD
ASB	BKG	081388	CHROMIUM	LT	4.0000	UGL	EE
ASB	BKG	081388	COPPER	LT	4.0000	UGL	EE
ASB	BKG	081388	CYANIDE	LT	5.0000	UGL	EE
ASB	BKG	081388	MERCURY	LT	0.2000	UGL	EE
ASB	BKG	081388	MANGANESE		13.0000	UGL	EE
ASB	BKG	081388	SODIUM		1630.0000	UGL	EE
ASB	BKG	081388	NICKEL	LT	4.0000	UGL	EE
ASB	BKG	081388	NITRATE AS NITROGEN		1080.0000	UGL	EE
ASB	BKG	081388	LEAD	LT	6.0000	UGL	EE
ASB	BKG	081388	PH		4.6000	PH	FD
ASB	BKG	081388	PHENOLS	LT	5.0000	UGL	EE

Raw Background Data

ASB	BKG	081388	SELENIUM	LT	2.0000	UGL	EE
ASB	BKG	081388	TIN	LT	120.0000	UGL	EE
ASB	BKG	081388	SULFATE	LT	5000.0000	UGL	EE
ASB	BKG	081388	TETRACHLOROETHYLENE	LT	1.0000	UGL	EE
ASB	BKG	081388	TOTAL DISSOLVED SOLIDS		28000.0000	UGL	EE
ASB	BKG	081388	TOTAL RADIUM		0.5500	PCL	EE
ASB	BKG	081388	TOTAL PHOSPHATES	LT	20.0000	UGL	EE
ASB	BKG	081388	TOTAL PHOSPHATES	LT	20.0000	UGL	EE
ASB	BKG	081388	TRICHLOROETHYLENE	LT	1.0000	UGL	EE
ASB	BKG	081388	URANIUM	LT	1000.0000	UGL	EE
ASB	BKG	081388	1,1,1-TRICHLOROETHANE	LT	1.0000	UGL	EE
ASB	BKG	081388	ZINC		49.0000	UGL	EE
ASB	BKG	102888	SILVER	LT	2.0000	UGL	EE
ASB	BKG	102888	ALUMINUM		50.0000	UGL	EE
ASB	BKG	102888	ALUMINUM		52.0000	UGL	EE
ASB	BKG	102888	ARSENIC	LT	2.0000	UGL	EE
ASB	BKG	102888	BARIUM		4.0000	UGL	EE
ASB	BKG	102888	BARIUM		4.0000	UGL	EE
ASB	BKG	102888	CADMIUM	LT	2.0000	UGL	EE
ASB	BKG	102888	CADMIUM	LT	2.0000	UGL	EE
ASB	BKG	102888	CHLORIDE		2100.0000	UGL	EE
ASB	BKG	102888	SPECIFIC CONDUCTANCE		25.0000	UMHC	FD
ASB	BKG	102888	CHROMIUM	LT	4.0000	UGL	EE
ASB	BKG	102888	CHROMIUM	LT	4.0000	UGL	EE
ASB	BKG	102888	COPPER		5.0000	UGL	EE
ASB	BKG	102888	COPPER		5.0000	UGL	EE
ASB	BKG	102888	CYANIDE	LT	5.0000	UGL	EE
ASB	BKG	102888	MERCURY	LT	0.2000	UGL	EE
ASB	BKG	102888	SODIUM		1720.0000	UGL	EE
ASB	BKG	102888	SODIUM		1740.0000	UGL	EE
ASB	BKG	102888	NICKEL	LT	4.0000	UGL	EE
ASB	BKG	102888	NICKEL	LT	4.0000	UGL	EE
ASB	BKG	102888	NITRATE AS NITROGEN		1210.0000	UGL	EE
ASB	BKG	102888	NITRATE AS NITROGEN		1210.0000	UGL	EE
ASB	BKG	102888	LEAD		10.0000	UGL	EE
ASB	BKG	102888	LEAD		9.0000	UGL	EE
ASB	BKG	102888	PH		4.6000	PH	FD
ASB	BKG	102888	PHENOLS	LT	5.0000	UGL	EE
ASB	BKG	102888	PHENOLS	LT	5.0000	UGL	EE
ASB	BKG	102888	SELENIUM	LT	2.0000	UGL	EE
ASB	BKG	102888	SULFATE	LT	5000.0000	UGL	EE
ASB	BKG	102888	TOTAL DISSOLVED SOLIDS		112000.0000	UGL	EE
ASB	BKG	102888	TOTAL RADIUM	LT	1.0000	PCL	RM
ASB	BKG	102888	TOTAL PHOSPHATES	LT	20.0000	UGL	EE
ASB	BKG	102888	TOTAL PHOSPHATES	LT	20.0000	UGL	EE
ASB	BKG	102888	URANIUM	LT	1000.0000	UGL	EE
ASB	BKG	102888	URANIUM	LT	1000.0000	UGL	EE
ASB	BKG	102888	ZINC		42.0000	UGL	EE
ASB	BKG	102888	ZINC		46.0000	UGL	EE
ASB	BKG	020789	SILVER	LT	2.0000	UGL	EE
ASB	BKG	020789	ALUMINUM		80.0000	UGL	EE
ASB	BKG	020789	GROSS ALPHA	LT	3.0000	PCL	RM
ASB	BKG	020789	ARSENIC	LT	2.0000	UGL	EE
ASB	BKG	020789	BARIUM		5.0000	UGL	EE
ASB	BKG	020789	NONVOLATILE BETA		1.0700	PCL	RM
ASB	BKG	020789	CARBON TETRACHLORIDE	LT	1.0000	UGL	EE
ASB	BKG	020789	CARBON TETRACHLORIDE	LT	1.0000	UGL	EE
ASB	BKG	020789	CADMIUM	LT	2.0000	UGL	EE
ASB	BKG	020789	CHLOROFORM	LT	1.0000	UGL	EE
ASB	BKG	020789	CHLOROFORM	LT	1.0000	UGL	EE
ASB	BKG	020789	CHLOROFORM	LT	1.0000	UGL	MA
ASB	BKG	020789	CHLORIDE		2200.0000	UGL	EE
ASB	BKG	020789	SPECIFIC CONDUCTANCE		28.0000	UMHC	FD
ASB	BKG	020789	SPECIFIC CONDUCTANCE		22.5000	UMHC	EE

Raw Background Data

ASB	BKG	020789	CHROMIUM	LT	4.0000	UGL	EE
ASB	BKG	020789	COPPER		11.0000	UGL	EE
ASB	BKG	020789	CYANIDE	LT	5.0000	UGL	EE
ASB	BKG	020789	MERCURY	LT	0.2000	UGL	EE
ASB	BKG	020789	MANGANESE		17.0000	UGL	EE
ASB	BKG	020789	SODIUM		1740.0000	UGL	EE
ASB	BKG	020789	NICKEL		20.0000	UGL	EE
ASB	BKG	020789	NITRATE AS NITROGEN		997.0000	UGL	EE
ASB	BKG	020789	NITRATE AS NITROGEN		999.0000	UGL	EE
ASB	BKG	020789	LEAD		20.0000	UGL	EE
ASB	BKG	020789	PH		4.5000	PH	FD
ASB	BKG	020789	PH		4.7100	PH	EE
ASB	BKG	020789	PHENOLS	LT	5.0000	UGL	EE
ASB	BKG	020789	SELENIUM	LT	2.0000	UGL	EE
ASB	BKG	020789	TIN	LT	120.0000	UGL	EE
ASB	BKG	020789	SULFATE	LT	5000.0000	UGL	EE
ASB	BKG	020789	TETRACHLOROETHYLENE	LT	1.0000	UGL	EE
ASB	BKG	020789	TETRACHLOROETHYLENE	LT	1.0000	UGL	EE
ASB	BKG	020789	TETRACHLOROETHYLENE	LT	1.0000	UGL	MA
ASB	BKG	020789	TOTAL DISSOLVED SOLIDS	LT	5000.0000	UGL	EE
ASB	BKG	020789	TOTAL DISSOLVED SOLIDS	LT	5000.0000	UGL	EE
ASB	BKG	020789	TOTAL ORGANIC CARBON	LT	1000.0000	UGL	EE
ASB	BKG	020789	TOTAL RADIUM		0.7300	PCL	RM
ASB	BKG	020789	TOTAL PHOSPHATES	LT	20.0000	UGL	EE
ASB	BKG	020789	TRICHLOROETHYLENE	LT	1.0000	UGL	EE
ASB	BKG	020789	TRICHLOROETHYLENE	LT	1.0000	UGL	EE
ASB	BKG	020789	TRICHLOROETHYLENE	LT	1.0000	UGL	MA
ASB	BKG	020789	TRANS-1,2-DICHLOROETHENE	LT	1.0000	UGL	MA
ASB	BKG	020789	URANIUM	LT	1000.0000	UGL	EE
ASB	BKG	020789	1,1-DICHLOROETHYLENE	LT	1.0000	UGL	MA
ASB	BKG	020789	1,1,1-TRICHLOROETHANE	LT	1.0000	UGL	EE
ASB	BKG	020789	1,1,1-TRICHLOROETHANE	LT	1.0000	UGL	EE
ASB	BKG	020789	1,1,1-TRICHLOROETHANE	LT	1.0000	UGL	MA
ASB	BKG	020789	ZINC		17.0000	UGL	EE

APPENDIX B

CONSTRUCTION DETAILS FOR SRL SEEPAGE BASIN GROUNDWATER MOINITORING WELLS

This Page Intentionally Left Blank.

Construction Details for SRL Seepage Basin Monitoring Wells

Well ID	SRP North Coord.	SRP East Coord.	Install Date	Top of Casing Elev.	Top of Screen Elev.	Screen Length	Casing Material	Screen Material	Drilling Method
ASB 1A	105535.0	52614.0	1/5/84	349.1	247.2	30.0	PVC	PVC	Mud Rotary
ASB 2A	105608.8	52856.9	12/30/83	349.0	246.9	30.0	PVC	PVC	Mud Rotary
ASB 3A	105657.4	53152.7	10/13/81	345.0	247.9	30.0	PVC	PVC	Mud Rotary
ASB 4	105935.7	53177.2	8/20/81	335.6	256.1	30.0	PVC	PVC	Mud Rotary
ASB 5A	105885.5	52865.7	2/13/84	345.0	247.9	30.0	PVC	PVC	Mud Rotary
ASB 6A	105716.0	52675.9	2/20/84	350.2	248.2	30.0	PVC	PVC	Mud Rotary

THIS PAGE INTENTIONALLY LEFT BLANK

NAME E.W. Rabon ORGANIZATION HP

LOCATION ~~773-A~~ 735-A PHONE 1854

IDENTIFICATION

Redrill

Well Number A-1 Area ~~773~~ 700-A seepage basin

Coordinates N 105,535.00 E 52,613.28

Ground Elevation 347.15 Permits WCP

WELL HOLE DATA

Condition of Well _____ Drill Date 12/27/83

Well Driller Law (James) Depth of Well 130' Barehole Diamete

Drilling Method Hydralic & Rotary Geologic Formation at Bottom Clay

Mud Type: _____ Native Clay ✓ Bentonite

Sampling: _____ Auger _____ Ditch _____ Cores No samples

WELL CASING DATA

Casing Type PVC Flush threaded Length of Casing (below ground) 100'

Diameter of Casing 4" Elevation at Top of Casing 349.14

Type of Grout cement Placement pumped from bottom up

FINISH TYPE DATA

Type of Screen pvc flush threaded Opening Size .018"

Bottom Closure: pvc plug ~~Cast Concrete~~ _____ Poured Concrete Pl

Setting: ✓ Bottom Hole Placement _____ Washed Down

_____ Casing and Packer Placement

FINISH ZONE DATA

Geologic Formation Screened ND

Number of Finish Zones in Formation ND

Depth to Top of Uppermost Zone ND

Depth to Bottom of Last Zone ND

FINISH PACKING DATA

Packing Used pea gravel & sand Method of Packing poured

Depth to Top of Packing ____ Depth to Bottom of Packing ____

Materials Used: 34 Sacks Cement 3 Sacks Sand

32 ~~Gallons Lock Grips~~ bags pea gravel

WATER LEVEL DATA

Measuring Point: ✓ Top of Casing ____ Ground Level

____ Other (If other, elevation of measurin

____)

Water Level 106' Date of Measurement 2/24/84

DEVELOPMENT DATA

Development blow with air, surge with wate

Length of Time Developed 15 Hrs.

TEST YIELD DATA

Date Tested NONE Length of Time Tested NONE Test Yield _

Test Drawdown NONE Pump Type NONE

PRODUCTION YIELD DATA

Production Yield ____ Drawdown ____ Pump Type _

LOCATION OF OTHER FILES

Driller's Log Env. Col & Envirodyne Geophysical Log ____

Physical Core ____ Cutting Samples ____

Water Level Observations E.C. Dissolved Solids Analysis _

Dissolved Gasses Analysis ____ Radionuclide Analysis E.

Engineering Drawing ____ Engineering Drawing Number _

Drilled by: James T Hanna SECW

Developed by: Riley Hunter SCCWC

Tech. oversite By: [illegible]

ASB 2A

DRILLING REQUEST
Re-drill

NAME E.W. Rabon ORGANIZATION HP

LOCATION ~~773-A~~ 735-A PHONE 1854

IDENTIFICATION

Well Number A-2 Area ~~773~~ 700-A seepage basin

Coordinates N 105,608.76 E 52,856.93

Ground Elevation 346.95 Permits WCP

WELL HOLE DATA

Condition of Well _____ Drill Date 12-27-83

Well Driller Law (James) Depth of Well 130' Barehole Diamete

Drilling Method Hydralic & Rotary Geologic Formation at Bottom Clay

Mud Type: _____ Native Clay ✓ Bentonite

Sampling: _____ Auger _____ Ditch _____ Cores No Samples.

WELL CASING DATA

Casing Type Pvc flush threaded Length of Casing (below ground) 100

Diameter of Casing 4" Elevation at Top of Casing _____

Type of Grout cement Placement pumped from bottom up

FINISH TYPE DATA

Type of Screen pvc flush threaded Opening Size .018"

Bottom Closure: pvc plug ~~Cast Concrete~~ _____ Poured Concrete Pl

Setting: ✓ Bottom Hole Placement _____ Washed Down

_____ Casing and Packer Placement

FINISH ZONE DATA

Geologic Formation Screened ND

Number of Finish Zones in Formation ND

Depth to Top of Uppermost Zone ND

Depth to Bottom of Last Zone ND

WORK CLEARANCE PERMIT

The Work Clearance Permit provides detail on the safety requirements of specific jobs and a written authorization to begin work. (Safety Manual Item 32 describes its use)

SAFETY MANUAL REFERENCE	TYPE OF ACTIVITY	SAFETY A REQUIRE
23	☐ Vessel Entry (Attach OSR 20-15)	1, 2, 5, 6, 7, 8, 1
25	☐ Welding and Flame (Use this Form)	1, 2, 3, 4, 5, 7, 1
26	☐ Operation of Equipment Near Overhead Power Lines (Use this Form)	5, 7, 8, 9, 10, 11
27	☑ Excavation or Structure Alteration (Use this Form)	1, 5, 7, 8, 15
27 -	☐ Railroad or Plant Roadway Clearance (Use this Form)	1, 14, 15
	☑ Other Drilling	

PERMIT TO DO THE FOLLOWING WORK

Drill And Install Two (2) Monitoring Wells At 773-A Seepage Basin

Site Was Hi Sw 77-85-6

SAFETY ANALYSIS REQUIREMENTS

- ☑ 1. Area Roped Off and Posted with Warning Signs
- ☐ 2. Standby Fire Extinguisher – Type _____
- ☐ 3. Fireproof Curtains
- ☐ 4. Plastic Hut (Self Extinguishing Material)
- ☐ 5. Testing as Indicated Below
- ☐ 6. Lines Drained and Depressurized
- ☐ 7. Lock, Tag and Try Procedure
- ☐ 8. Power Source Deenergized
- ☐ 9. E&I Representative Present
- ☐ 10. Crane Properly Positioned
- ☐ 11. Electrical Grounding
- ☑ 12. 20' Clearance from Electric Lines
- ☐ 13. Non-conducting Tag Lines
- ☐ 14. Signalman
- ☐ 15. Other Special Requirements _____

SPECIAL PR EQUIPMENT (SPE

- ☐ Respiratory Pr
- ☑ Eye or Face P
- ☐ Protective Clo

Leather And Hard

TESTS REQUIRED		FREQUENCY	INITIAL RESULT
	☐ Oxygen		
	☐ Explosibility		
	☐ Health Physics Monitoring		
	☐ Other		

SERVICING S IN CHARGE

APPROVALS (ENTER NA WHEN APPROVAL NOT REQUIRED)	CUSTODIAN	MAINTENANCE	E&I	T&T	HEAL
	J. J. Shea	N/A	R. Jones	N/A	G.
	POWER	PATROL	SECURITY	PROJECT	FIRE
	H. W. Nolte	N/A	N/A	N/A	N/A

ALL PERSONNEL WORKING ON THIS ASSIGNMENT SHALL READ THIS ANALYSIS AND INITIAL BELOW IF THEY CONCUR THAT THE SAFETY REQUIREMENTS HAVE BEEN COMPLETED.

NAME DEPARTMENT	NAME/DEPARTMENT	NAME DEPARTMENT	NAME/DE
[illegible] Rung	Riley Horton	James Thomas	
K Heath	H. Bates		
H Thomas	Henzi		

WORK CLEARANCE AUTHORIZATION

WORK REQ

RENEWAL FREQUENCY	CUSTODIAN REPRESENTATIVE	DATE/SHIFT	SERVICE REPRESENTATIVE	DATE/SHIFT	CUSTODIAN REPRESENTATIVE	DATE/SHIFT	SERVICE REPRE
	CUSTODIAN REPRESENTATIVE	DATE/SHIFT	SERVICE REPRESENTATIVE	DATE/SHIFT	CUSTODIAN REPRESENTATIVE	DATE/SHIFT	SERVICE REPRE
SHIFT	CUSTODIAN REPRESENTATIVE	DATE/SHIFT	SERVICE REPRESENTATIVE	DATE/SHIFT	CUSTODIAN REPRESENTATIVE	DATE/SHIFT	SERVICE REPRE
DAILY	CUSTODIAN REPRESENTATIVE	DATE/SHIFT	SERVICE REPRESENTATIVE	DATE/SHIFT	CUSTODIAN REPRESENTATIVE	DATE/SHIFT	SERVICE REPRE
OTHER	CUSTODIAN REPRESENTATIVE	DATE/SHIFT	SERVICE REPRESENTATIVE	DATE/SHIFT	CUSTODIAN REPRESENTATIVE	DATE/SHIFT	SERVICE REPRE

completion of work

NOTE: WORK CLEARANCE PERMIT MUST BE APPROVED PRIOR TO START OF WORK

WELL DRILLING

FIELD ACTIVITIES LOG

WELL I.D. # A-2 seepage Basin

DATE	ACTIVITY	TIME START	TIME FINISH	REMARKS	INI
12-27-83	Preparing Site -	1200	1240		
	Obtaining Supplies - 1) Casing; Screen				MK
	2) Bentonite; cement				
	3) Gravel & Sand				
	4) Water				
	Setting-up Equipment-	1230	100		
	1) Well Rig	1230	1240		
	2) Pump, compressor				
	3) Layout of Rods	1240	1255		
	Drilling Hole - 1) Starting	1:15			
	2) Depth (~~Lunch~~ End of Day 25 ft.)		400		
12/28/83	3) ~~Depth(Complete~~ Started ft)	11:30 AM	90' HCO	rain & lighting all morning	MK
	4) Washing Out Hole				
12/29/83	5) Remove Drill Rods	12:30	1:15		
	Setting Screen/Casing	1:20	1:50		
	1) Trimmer Pipe	1:55	2:15		
	2) Gravel Pack	2:30	2:50		
	3) Wash	3:00	3:45		
	4) Sand	350	4:00		MK
12/30/83	5) Grout	8:00	11:00		
	(6) Cleaning Equipment	11:30	11:50		
	Cleaning Site	12:00	1:15		MK

FINISH PACKING DATA

Packing Used pea gravel & sand Method of Packing pour

Depth to Top of Packing _____ Depth to Bottom of Packing _____

Materials Used: 30 Sacks Cement 3 Sacks Sand

26 ~~Gallons Lock Grout~~ bags pea gravel

WATER LEVEL DATA

Measuring Point: ✓ Top of Casing _____ Ground Level

_____ Other (If other, elevation of measuri

_____)

Water Level 107' Date of Measurement 2/24/84

DEVELOPMENT DATA

Development blew with air, surge with water

Length of Time Developed 10 hrs

TEST YIELD DATA

Date Tested none Length of Time Tested none Test Yield

Test Drawdown none Pump Type none

PRODUCTION YIELD DATA

Production Yield _____ Drawdown _____ Pump Type

LOCATION OF OTHER FILES

Driller's Log Env. Col. & Enviodyne Geophysical Log _____

Physical Core _____ Cutting Samples _____

Water Level Observations E.C. Dissolved Solids Analysis

Dissolved Gasses Analysis _____ Radionuclide Analysis E

Engineering Drawing _____ Engineering Drawing Number

Drilled By: [illegible] T [illegible] scwd#

Developed by: [illegible] scwd# 1

Tech. oversite By: [illegible] scwd# 3

B-8

ENVIRODYNE ENGINEERS INC.

WELL CONSTRUCTION DETAILS

Job No. _____ Boring No. A-2 redrill

Date of Installation 12/28/83 Time Started 12-27-83 Time Completed 12/28/83 2:00

Ground Surface Elev. _____

All depth measurements of well detail are from ground surface unless otherwise indicated.

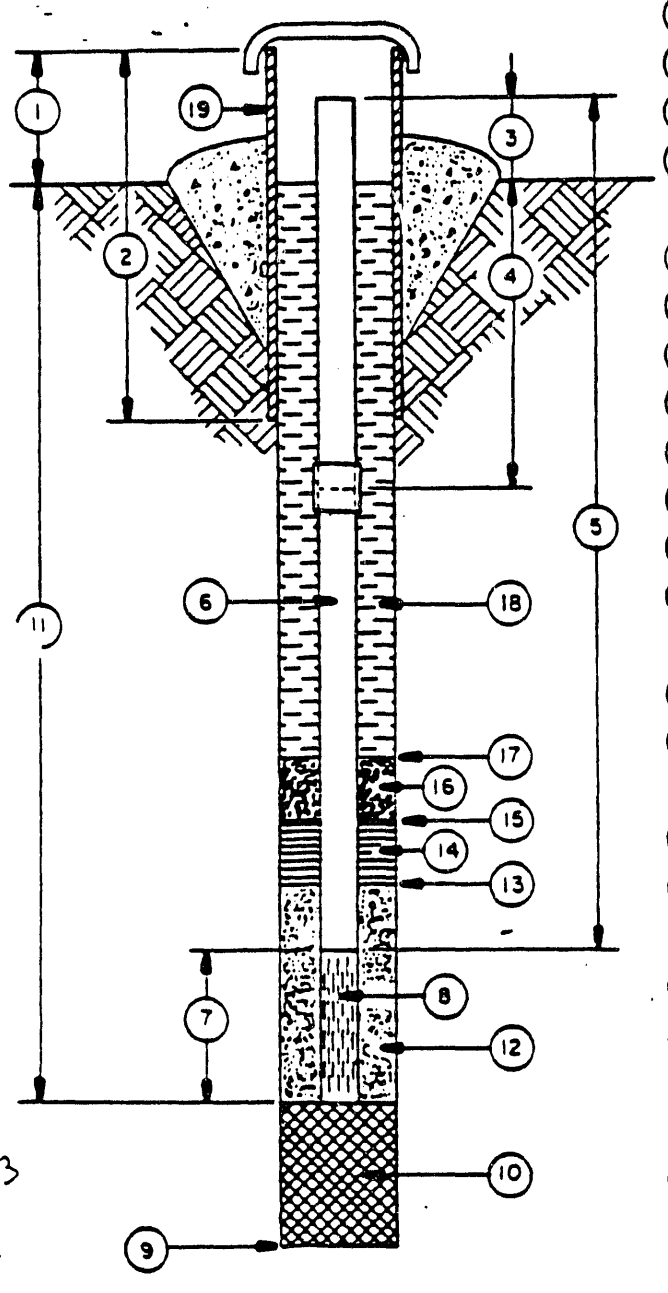

1. Height of Protective Casing Above Ground N/A
2. Total Length of Protective Casing N/A
3. Height of Standpipe Above Ground 2'
4. Depth to First Coupling 20'
   Coupling Interval 20, 20, 20, 20, 20
5. Total Length of Blank Pipe 100'
6. Type of Blank Pipe sch 20 PVC 4"
7. Length of Screen 30'
8. Type of Screen slotted PVC 4" .018"
9. Total Depth of Boring 130' Hole Diam. 10"
10. Type of Material clay & sand
11. Depth to Bottom of Screen 130'
12. Type of Screen Filter pea gravel
    Quantity Used 26 bags
13. Depth to Top of Filter 95
14. Type of Seal White sand
    Quantity Used 3 bags
15. Depth to Top of Seal 90'
16. Type of Seal Weight N/A
    Quantity Used N/A
17. Depth to Top of Seal Weight N/A
18. Type of Grout Cement
    Grout Mixture Cement & water
19. Type of Protective Casing N/A
    Concrete Collar Mixture Cement & water

Remarks:

ASB 3A

10-12-87

DRILLING REQUEST

REQUESTOR

NAME: D I ROSS ORGANIZATION: HEALTH PROTECTION

LOCATION: 735-A PHONE: 2242

WELL

WELL NUMBER: 700-A SB #3 REDRILL

COORDINATES OR LOCATION: N-105,712.4 E-52,989.0

PATROL INDEX = B-13 ELEVATION = 348.21

PERMITS: YES Not Required ___ Work Clearance NA Site Clearance YES SR88 (OSR-20-103)

BOREHOLE DIAMETER: ___ 2" ___ 4" ___ 6" ✓ 10"

DEPTH: 125'

DRILLING METHOD: ___ Auger ✓ Hydraulic Rotary ___ Drive Hammer

MUD TYPE: ___ Native Clay ✓ Bentonite

SAMPLING: ___ Auger ✓ Ditch ___ Cores

FREQUENCY: ___ Continuous 5' Foot Intervals

SCREEN TYPE: PVC Diameter: 4" Length: 30'

BOTTOM CLOSURE: ___ Cast Concrete Plug ___ Poured Concrete Plug PVC CS

SETTING: ✓ Bottom Hole Placement ___ Washed Down

___ Casing and Packer Placement.

FINISH: ___ None 3' ABOVE SCREEN Gravel Pack 2' ABOVE GRAVEL Sand Pack Interval _____

CASING TYPE: PVC Diameter: 4" Length: 95'

Above Ground: 2' Cover: _____

GROUT: ___ Neat ___ 1/3 Sand

Placement: 7-8' ABOVE SAND BOTTOM TO TOP Grout Pipe ___ From Top

dd

D'APPOLONIA DRILLING INC.

10 DUFF ROAD
PITTSBURGH, PA. 15235
412-243-0312

Job # 81-895

DRILLERS TEST BORING RECORD

Driller: Joe Kemp

Surface Elevation:

Water Depth: 95.0' 24 hrs.

Hammer Weight Sa. — lbs. Drop — in.

Hammer Weight Ca. — lbs. Drop — in.

Casing Size — in. Sam. Size — in.

Hole No. 700 A SB well #3 Sheet 1 of 1

Station:

For SAVANNA River PLANT

Location JACKSON S.C

Started 10-12-81 Completed 10-13-81

ELEVATION	DEPTH	HAMMER BLOWS SAMPLE	HAMMER BLOWS CASING	DEPTH DRILLED	SAMPLE NO. / RECY.	LOG OF HOLE
						Red, Br + white CLAYS w/ minor sand + SILT
0'	—	—	— — —	—	— —	Coarse Silica Sand + Clays
0'	—	—	— — —	—	— —	Silica Sand + minor Clays
	Terminated at		125.0'			30.0' slotted PVC 100.0' SCH 40 PVC 33.0' Gravel PAC 2.0' Sand Plug 90.0' Grout Seal

B-11

DEVELOPMENT: ___ Not Required ___ Surge and Pump

✓ Air Sparge ✓ Water Sparge

Surging Period(s) 1 HR + 50 MIN. ON 10-16-81

Pumping Period(s) _____

FINISH: ___ Not Required ___ Yellow Paint ___ Fence

✓ Guard Posts

CREW ASSIGNED: _____

MATERIALS USED: 46 Sacks Cement : 1 Sacks Sand 33 FT PEA GRAVEL ~~Gallons Rock Chips~~

REMARKS: H_2O TABLE = 940' ON 10-13-81

ENVIRODYNE ENGINEERS INC.

WELL CONSTRUCTION DETAILS

Job No. _____ ~~Boring~~ Well No. A-1 7080 S

Date of Installation 1/4/84 Time Started 1/7/84 8 Am Time Completed 1/5/84

Ground Surface Elev. _____

All depth measurements of well detail are from ground surface unless otherwise indicated.

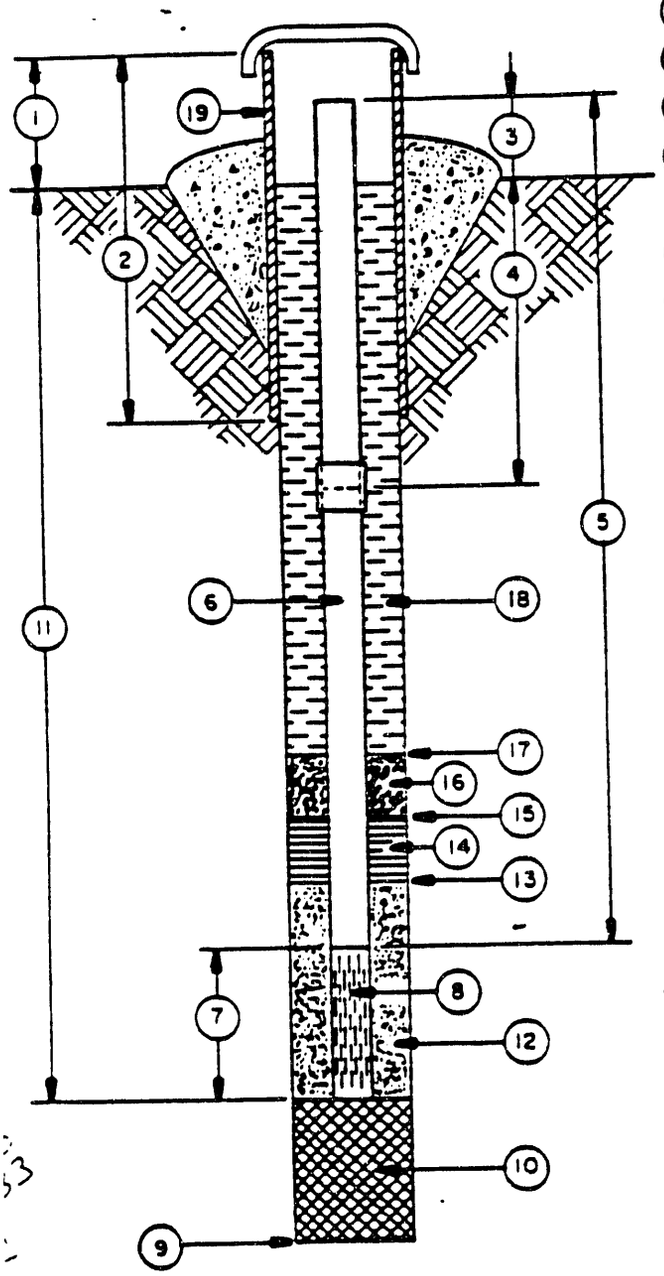

1. Height of Protective Casing Above Ground N/A
2. Total Length of Protective Casing N/A
3. Height of Standpipe Above Ground 2'
4. Depth to First Coupling 20,
   Coupling Interval 20' 20 20' 20 20 20
5. Total Length of Blank Pipe 108'
6. Type of Blank Pipe sch 20 PVC 4"
7. Length of Screen 30'
8. Type of Screen slotted PVC 4" .018
9. Total Depth of Boring 130' Hole Diam. 10"
10. Type of Material clay - SAND
11. Depth to Bottom of Screen 130'
12. Type of Screen Filter pea gravel
    Quantity Used 32 bags
13. Depth to Top of Filter 95'
14. Type of Seal white sand
    Quantity Used 3 bags
15. Depth to Top of Seal 91'
16. Type of Seal Weight N/A
    Quantity Used N/A
17. Depth to Top of Seal Weight N/A
18. Type of Grout Cement
    Grout Mixture Cement & water
19. Type of Protective Casing N/A
    Concrete Collar Mixture Cement & water

Remarks:

WELL DRILLING

FIELD ACTIVITIES LOG

WELL I.D. # A-1 70E

DATE	ACTIVITY	TIME START	TIME FINISH	REMARKS
	Preparing Site -			
12/30/83	Obtaining Supplies - 1) Casing; Screen			Already have supplies
	2) Bentonite; cement			
	3) Gravel & Sand			
	4) Water			
11/30/83	Setting-up Equipment-			
	1) Well Rig	1:00	1:45	
	2) Pump, compressor			
	3) Layout of Rods	1:50	2:20	
	Drilling Hole -			
12/2/84	1) Starting	8:00		
	2) Depth (Lunch · ft.)	60'	12:00	
12/4/84	3) Depth(Complete ft)	1:20	130'	
	4) Washing Out Hole	1:20	1:40	
	5) Remove Drill Rods	1:45	2:10	
	Setting Screen/Casing	2:15	2:30	
	1) Trimmer Pipe	2:40	3:05	
	2) Gravel Pack	3:10	3:40	
	3) Wash	3:40	4:00	
12/5/84	4) Sand	9:00	9:30	
	5) Grout	9:30	11:00	
	(6) Cleaning Equipment	11:00	11:30	
	Cleaning Site			

ADD T

DRILLING REQUEST

REQUESTOR

NAME: D.I. Ross ORGANIZATION: Health Protection

LOCATION: 735-A PHONE: 2242

WELL

WELL NUMBER: 700-A S.B. Well #4

COORDINATES OR LOCATION: N-105,840.8 E-53,109.9

PATROL INDEX = B-13

PERMITS: ✓ Not Required ___ Work Clearance NA Site Clearance ✓ SR88 (OSR-20-103)

BOREHOLE DIAMETER: ___ 2" ___ 4" ___ 6" ✓ 10"

DEPTH: 107'

DRILLING METHOD: ___ Auger ✓ Hydraulic Rotary ___ Drive Hammer

MUD TYPE: ___ Native Clay ✓ Bentonite

SAMPLING: ___ Auger ✓ Ditch ___ Cores

FREQUENCY: ___ Continuous 5' Foot Intervals

SCREEN TYPE: PVC Diameter: 4" Length: 30'

BOTTOM CLOSURE: ___ Cast Concrete Plug ___ Poured Concrete Plug PVC (screwed)

SETTING: ✓ Bottom Hole Placement ___ Washed Down

___ Casing and Packer Placement.

FINISH: ___ None 3' Screen Gravel Pack 2' Sand Pack Interval _____

CASING TYPE: PVC Diameter: 4" Length: 77'

Above Ground: 30" Cover: _____

GROUT: ___ Neat ___ 1/3 Sand From bottom to top

Placement: 7-8' Grout Pipe ___ From Top

DEVELOPMENT: ___ Not Required ___ Surge and Pump

✓ Air Sparge ✓ Water Sparge

Surging Period(s) 3 Hrs.

Pumping Period(s) 1 Hr.

FINISH: ___ Not Required ___ Yellow Paint ___ Fence

✓ Guard Posts

CREW ASSIGNED: D. Apostolonia

MATERIALS USED: 28 Sacks Cement 2 Sacks Sand ~1 ton pea gravel Gallons Rock Chips

REMARKS: H_2O TABLE = 85.0' ON 8-27-81

1) To be pumped Later

2) H_2O Table after developing on 8/27/81 = 91'

dd

DRILLERS TEST BORING RECORD

Hole No. [redacted] Sheet 1 of 1

Location: [illegible] Carolina

Started 8/18/81 Completed 8/20/81

ELEVATION	DEPTH	HAMMER WEIGHT	HAMMER BLOWS CASING	DEPTH DRILLED	SAMPLE NO. / RECY.	LOG OF HOLE
						Reddish Red Silty [illegible]
						Red Clayey Silt w/Silica Sand & Minor Silica Gravel
						Coarse Silica Sand w/Minor Gravel & Silt Red & White
						White Silty Clay w/Some Sand & Gravel
						Terminated Hole At [illegible]

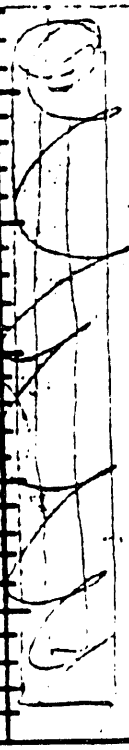

THIS PAGE INTENTIONALLY LEFT BLANK

D APPOLONIA DRILLING, INC. **adi**

Date 8/[illegible] Rig Number T-45 Job Rig Time Started 8:00 AM

Location [illegible] Project No. 81-895 Time Finished 6:00 PM

PAY ITEMS

Boring No.	Soil 5 ft.	Soil 3 ft.	Soil Cont.	Soil No Sample	Shelby Tube ____	Rock (ft) Show R=Rec NR= No Rec	Other
700 A&B	#	4'		114'			

REMARKS:

LIST TOTAL TIME SPENT ON THE FOLLOWING:

PRODUCTION TIME	HOURS	BREAKDOWN TIME	HOURS
Water Line Installing or Removing		Repairing Drill *	½ *
Hauling Water & Mixing Mud	1	Repairing Pump*	1 ✓
Moving & Setting Up		Fishing for Tools	
Driving Pipe		Repairing Vehicles*	
Drilling	7	Other*	
Installing Piezometer (ft).....			
Pressure Testing			
Other*			

*Indicate type of repairs: Repair on mud pump on
*Drill Rig Parking air shift came out
valve to locate all parts for grout pump

MATERIALS AND SUPPLIES PURCHASED-where purchased, what purchased and office (include gas and oil)
And trying to get motor
starter ~~Bo~~ new ~~Pl~~ plug wires and coil for

SUPPLIER	ITEM	COST
Engine & Distributor Cap.		

TRUCK MILEAGE

Driller Jim Nidzgarski Hours Worked 9½
Joe Kemp
Helper Dave Dingostine Hours Worked 9½
9½

CLIENT

Note: Signature is for payable quantities. Circle non-payable items.

ORIGINAL – DDI OFFICE
YELLOW – CLIENT
PINK – DRILLER

D'APPOLONIA DRILLING, INC. **ddi**

Date 8/24/81 Rig Number T-45 Job Rig Time Started 8:00 AM

Location [illegible] Project No. 81-875 Time Finished 4:30 PM

PAY ITEMS	Soil	Soil	Soil	Soil	Shelby	Rock (ft)	Other
Boring No.	5 ft.	3 ft.	Cont.	No Sample	Tube ____	Show R=Rec NR= No Rec	

REMARKS: Finished installing grout in 700-A & B Eng. Used 2C Bag of Grout Loaded Tools & Portable pumps & water Tank & Rig and moved to next Hole

LIST TOTAL TIME SPENT ON THE FOLLOWING Also picked up air compressor

PRODUCTION TIME	HOURS	BREAKDOWN TIME	HOURS
Water Line Installing or Removing		Repairing Drill *	
Hauling Water & Mixing Mud		Repairing Pump*	
Moving & Setting Up	4	Fishing for Tools	
Driving Pipe		Repairing Vehicles*	
Drilling		Other*	
Installing Piezometer (ft).....			
Pressure Testing			
Other* Load, Tow & Hole	4		

*Indicate type of repairs: _____

MATERIALS AND SUPPLIES PURCHASED-where purchased, what purchased and price (include gas and oil)

SUPPLIER	ITEM	COST

TRUCK MILEAGE

Driller Joe Kemp Hours Worked 8 Hrs

Helper Ron Dagostino Hours Worked 8 Hrs

CLIENT.....

Note: Signature is for payable quantities. Circle non-payable items.

ORIGINAL – DDI OFFICE
YELLOW – CLIENT
PINK – DRILLER

ASD -7

NAME J.E. Norris ORGANIZATION HP

LOCATION 735-A PHONE 1854

IDENTIFICATION

Well Number A-5 Area 700 S.G.

Coordinates N 105,885.50 E 52,865.68

Ground Elevation 342.85 Permits WCP

WELL HOLE DATA

Condition of Well _____ Drill Date 12/9/84 - 12/10/84

Well Driller Jack Lyons Depth of Well 125' Barehole Diamete

Drilling Method Hydraulic Rotary Geologic Formation at Bottom Sand

Mud Type: _____ Native Clay ✓ Bentonite

Sampling: _____ Auger _____ Ditch _____ Cores No samples.

WELL CASING DATA

Casing Type sch 40 PVC Flush thread Length of Casing (below ground) 95'

Diameter of Casing 4" Elevation at Top of Casing 345.02

Type of Grout Cement Placement pumped from bottom

FINISH TYPE DATA

Type of Screen PVC Opening Size .019

Bottom Closure: PVC Plug Cast Concrete _____ Poured Concrete Pl

Setting: ✓ Bottom Hole Placement _____ Washed Down

_____ Casing and Packer Placement

FINISH ZONE DATA

Geologic Formation Screened ND

Number of Finish Zones in Formation ND

Depth to Top of Uppermost Zone ND

Depth to Bottom of Last Zone ND

FINISH PACKING DATA

Packing Used pea gravel Method of Packing pour fro

Depth to Top of Packing _____ Depth to Bottom of Packing _____

Materials Used: 34 Sacks Cement 3 Sacks Sand

28 ~~Gallons~~ Bags Pack Chips

WATER LEVEL DATA

Measuring Point: ___ Top of Casing ___ Ground Level

___ Other (If other, elevation of measuring _____)

Water Level 103' Date of Measurement 2/24/84

DEVELOPMENT DATA

Development Blow with

Length of Time Developed _____

TEST YIELD DATA

Date Tested none Length of Time Tested none Test Yield non

Test Drawdown none Pump Type none

PRODUCTION YIELD DATA

Production Yield _____ Drawdown _____ Pump Type _____

LOCATION OF OTHER FILES

Driller's Log EW & Col & Envirodyne Geophysical Log _____

Physical Core _____ Cutting Samples _____

Water Level Observations EC Dissolved Solids Analysis _____

Dissolved Gasses Analysis _____ Radionuclide Analysis E.C

Engineering Drawing _____ Engineering Drawing Number _____

Drilled by [illegible] SCCWO # 314

Developed by [illegible] SCCWO # 141

B-22

WELL DRILLING

FIELD ACTIVITIES LOG

WELL I.D. # [illegible]

DATE	ACTIVITY	TIME START	TIME FINISH	REMARKS	INI
	Preparing Site -				
	Obtaining Supplies - 1) Casing; Screen				
	2) Bentonite; cement				
	3) Gravel & Sand				
	4) Water				
2/9/84	Setting-up Equipment-	2:00	2:00		
	1) Well Rig				
	2) Pump, compressor				
	3) Layout of Rods				
	Drilling Hole - 1) Starting	3:00			
2/10/84	2) Depth (Lunch · ft.)	12:00	110'		
	3) Depth(Complete ft)	1:00	1:25		
	4) Washing Out Hole	1:25	1:40		
	5) Remove Drill Rods	1:45	2:20		
	Setting Screen/Casing	2:30	2:45		
	1) Trimmer Pipe	2:45	2:00		
	2) Gravel Pack	2:00	3:20		
	3) Wash	3:25	4:00		
	4) Sand	4:00	2:10		
2/13/84	5) Grout	8:00	12:00	grout mix?	
	(6) Cleaning Equipment				
	Cleaning Site				

ENVIRODYNE ENGINEERS INC.

WELL CONSTRUCTION DET

Job No. _____ Boring No. A-5

Date of Installation 12/10/94 Time Started 12/9/94 Time Completed 12/1

Ground Surface Elev. _____

All depth measurements of well detail are from ground surface unless otherwise indicate

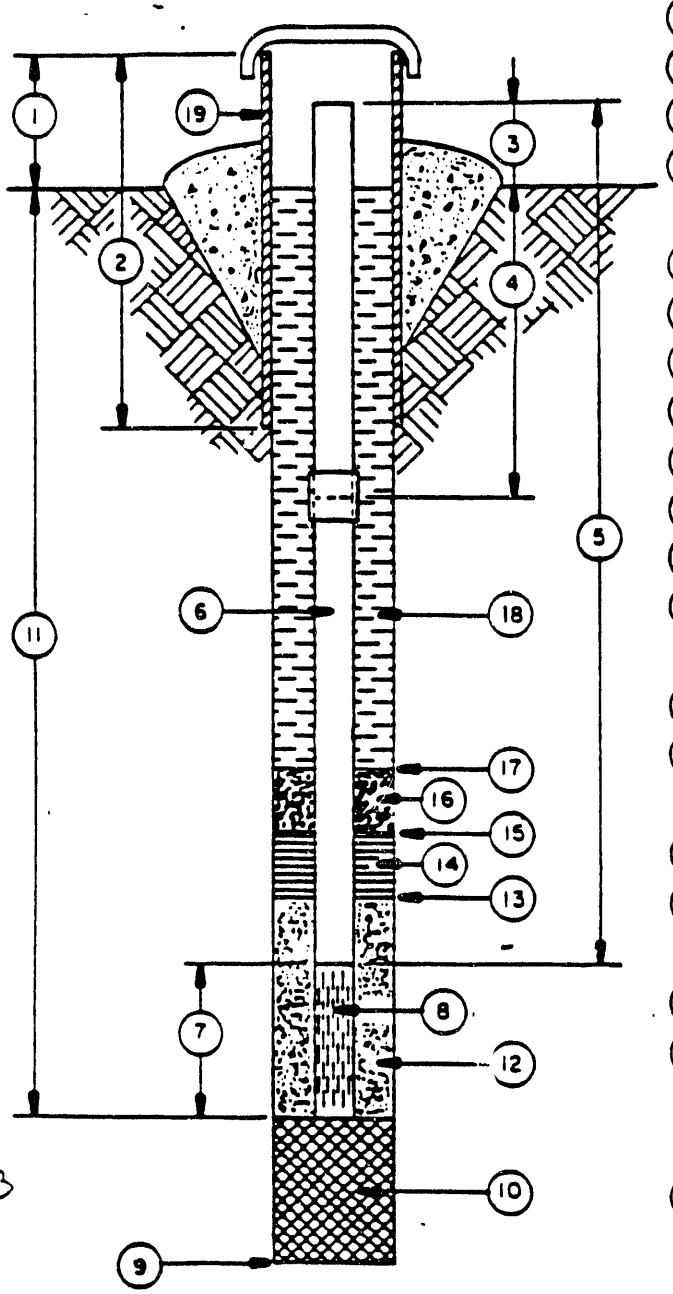

1. Height of Protective Casing Above Ground
2. Total Length of Protective Casing N/
3. Height of Standpipe Above Ground 2'
4. Depth to First Coupling 15
   Coupling Interval 15, 20, 20 20 20
5. Total Length of Blank Pipe 95'
6. Type of Blank Pipe sch 40 PVC -
7. Length of Screen 30'
8. Type of Screen slotted PVC-4
9. Total Depth of Boring 125' Hole Diam
10. Type of Material sand, clay
11. Depth to Bottom of Screen 125'
12. Type of Screen Filter pea gravel
    Quantity Used 28 bag
13. Depth to Top of Filter 90'
14. Type of Seal white sand
    Quantity Used 3 bag
15. Depth to Top of Seal 86'
16. Type of Seal Weight N/A
    Quantity Used N/A
17. Depth to Top of Seal Weight N/A
18. Type of Grout cement
    Grout Mixture cement & water
19. Type of Protective Casing N/A
    Concrete Collar Mixture cement & wa

Remarks:

NAME W.E. Norris ORGANIZATION HP

LOCATION 735-A PHONE 1854

IDENTIFICATION 1st Redrill

Well Number A-6 Area 700 SB.

Coordinates N _____ E _____

Ground Elevation _____ Permits WCP

WELL HOLE DATA

Start 12/3/84 2:0

Condition of Well _____ Drill Date _____

Well Driller James (Zaun) Depth of Well 125' Barehole Diamete

Drilling Method _____ Geologic Formation at Bottom Sand

Mud Type: _____ Native Clay ✓ Bentonite

Sampling: _____ Auger _____ Ditch _____ Cores no samples

WELL CASING DATA

Casing Type sch 40 PVC Flushthread Length of Casing (below ground) 95'

Diameter of Casing 4" Elevation at Top of Casing _____

Type of Grout Cement Placement pumped from bottom

FINISH TYPE DATA

Type of Screen PVC Opening Size .018

Bottom Closure: PVC Plug Cast Concrete _____ Poured Concrete Pl

Setting: ✓ Bottom Hole Placement _____ Washed Down

_____ Casing and Packer Placement

FINISH ZONE DATA

Geologic Formation Screened ND

Number of Finish Zones in Formation ND

Depth to Top of Uppermost Zone ND

Depth to Bottom of Last Zone ND

FINISH PACKING DATA

Packing Used pea gravel Method of Packing pour fre

Depth to Top of Packing 30' Depth to Bottom of Packing 12

Materials Used: 40 Sacks Cement 3 Sacks Sand

29 ~~Gallons~~ Bags Rock Chips grouted old well

WATER LEVEL DATA

Measuring Point: ✓ Top of Casing ____ Ground Level

____ Other (If other, elevation of measuring ____)

Water Level ____ Date of Measurement ____

DEVELOPMENT DATA

Development Blow with air surge with water

Length of Time Developed ____

TEST YIELD DATA

Date Tested none Length of Time Tested none Test Yield n

Test Drawdown none Pump Type none

PRODUCTION YIELD DATA

Production Yield ____ Drawdown ____ Pump Type ____

LOCATION OF OTHER FILES

Driller's Log ENV.COL. & Envirodyne Physical Log ____

Physical Core ____ Cutting Samples ____

Water Level Observations E.C. Dissolved Solids Analysis ____

Dissolved Gasses Analysis ____ Radionuclide Analysis E.

Engineering Drawing ____ Engineering Drawing Number ____

drilled by Sam Thom secwr # 3 / 4

developed by Riley Hooton secwr # 141

Technician Id. [illegible]

B-26

ENVIRODYNE ENGINEERS INC.

WELL CONSTRUCTION DETAILS

Job No. _____ Boring No. A-4 700 S.B

Date of Installation 12/14/84 Time Started 12/14/84 Time Completed 12/14/84

Ground Surface Elev. _____

All depth measurements of well detail are from ground surface unless otherwise indicated.

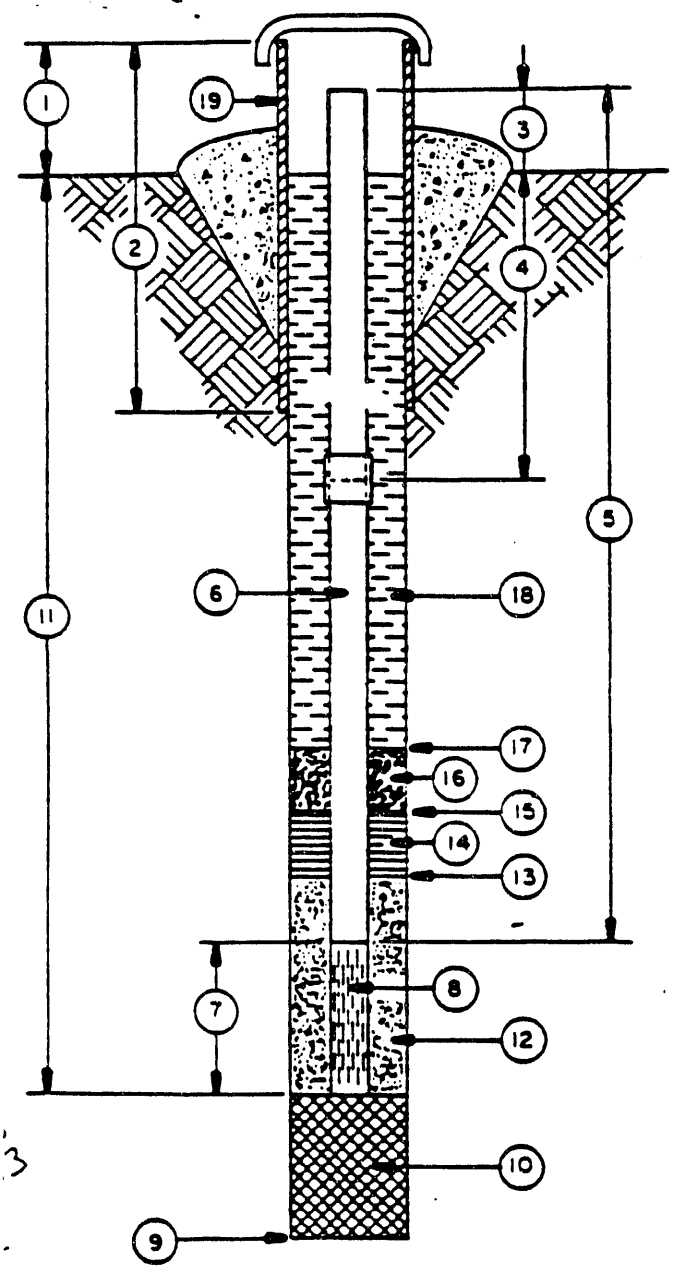

1. Height of Protective Casing Above Ground N/A
2. Total Length of Protective Casing N/A
3. Height of Standpipe Above Ground 2'
4. Depth to First Coupling 20' ~~[illegible]~~
   Coupling Interval 20, 20, 20, 20, 20, 10'
5. Total Length of Blank Pipe 100'
6. Type of Blank Pipe sch 40 PVC 4"
7. Length of Screen 30'
8. Type of Screen PVC slotted 4" - [illegible]
9. Total Depth of Boring 130' Hole Diam. 10"
10. Type of Material sand & clay
11. Depth to Bottom of Screen 130'
12. Type of Screen Filter pea gravel
    Quantity Used 50 bags
13. Depth to Top of Filter 90'
14. Type of Seal white sand
    Quantity Used 6 bags
15. Depth to Top of Seal 85'
16. Type of Seal Weight N/A
    Quantity Used N/A
17. Depth to Top of Seal Weight N/A
18. Type of Grout Cement
    Grout Mixture Cement & water
19. Type of Protective Casing N/A
    Concrete Collar Mixture Cement & water

Remarks:

WELL DRILLING

FIELD ACTIVITIES LOG

DATE	ACTIVITY	TIME START	TIME FINISH	WELL I.D. # A-6 7 REMARKS
	Preparing			
	Obtaining Supplies- 1) Casing Screen			
02/15/84	2) Bentonite	✓	✓	
	3) Gravel	✓	✓	
	4) Water	✓	✓	
	Setting-up Equipment-	already on site		
	1) Well Rig			
	2) Pump, compressor			
	3) Layout of Rods			
	Drilling Hole -			
02/14/84	1) Starting	200		
	2) Depth (Lunch ft.)			
2/17/84	3) Depth(Complete ft)	130'	10:00	
	Setting Screen/Casing-	1:00	:200	
	1) Gravel Pack	2:15	300	
	2) Sand	350	4:00	
2/20/84	3) Grout	8:00		
	Cleaning Site			

2/15/84 takes all morning to free up drill rods

2/16/84 They try to set casing but formation cave at bottom

2/18/84 get well redrilled and set casing, gravel,

NAME Ed Garcia ORGANIZATION HP

LOCATION 735-A PHONE 4/54

IDENTIFICATION 2nd Redrill

Well Number A-6 Area 700 SO.

Coordinates N 105,715.99 E 52,675.86

Ground Elevation 348.24 Permits WCP

WELL HOLE DATA

Condition of Well _____ Drill Date Start 12/14/94 Finish 12/14/

Well Driller Jan (James) Depth of Well 130' Barehole Diamet

Drilling Method Hydraulic Rotary Geologic Formation at Bottom SAND

Mud Type: ____ Native Clay ____ Bentonite

Sampling: ____ Auger ____ Ditch ____ Cores no samples

WELL CASING DATA

Casing Type PVC 4" Sch 40 Flush Thread Length of Casing (below ground) 100

Diameter of Casing 4" Elevation at Top of Casing 350.20

Type of Grout Cement Placement pump from bottom

FINISH TYPE DATA

Type of Screen PVC Opening Size .018

Bottom Closure: PVC Plug ~~Cast Concrete~~ ____ Poured Concrete P.

Setting: ____ Bottom Hole Placement ____ Washed Down

____ Casing and Packer Placement

FINISH ZONE DATA

Geologic Formation Screened N/D

Number of Finish Zones in Formation N/D

Depth to Top of Uppermost Zone N/D

Depth to Bottom of Last Zone N/D

FINISH PACKING DATA

Packing Used pea gravel Method of Packing pour for

Depth to Top of Packing ____ Depth to Bottom of Packing ____

Materials Used: 25 Sacks Cement 6 Sacks Sand

50 ~~[illegible]~~ Bags Rock Chips

WATER LEVEL DATA

Measuring Point: ____ ~~Top~~ of Casing ____ Ground Level

____ Other (If other, elevation of measuri

____)

Water Level 108'.5 Date of Measurement 2/24/84

DEVELOPMENT DATA

Development Blow with air surge with wat

Length of Time Developed 11 Hrs

TEST YIELD DATA

Date Tested none Length of Time Tested none Test Yield ____

Test Drawdown none Pump Type none

PRODUCTION YIELD DATA

Production Yield ____ Drawdown ____ Pump Type ____

LOCATION OF OTHER FILES

Driller's Log EWC Col EET Geophysical Log ____

Physical Core ____ Cutting Samples ____

Water Level Observations EC Dissolved Solids Analysis ____

Dissolved Gasses Analysis ____ Radionuclide Analysis EC

Engineering Drawing ____ Engineering Drawing Number ____

Drilled by James T. Thomas SCCWD # 374

Developed by Riley Horton SCCWD # 141

Tech Overseer by [illegible] SCCWD # 320

ENVIRODYNE ENGINEERS INC.

WELL CONSTRUCTION DETAILS

Job No. _____ ~~Boring~~ Well No. A-6 700

Date of Installation _____ Time Started 2/6/94 Time Completed 2/9/94 11:00 A

Ground Surface Elev. _____

All depth measurements of well detail are from ground surface unless otherwise indicated.

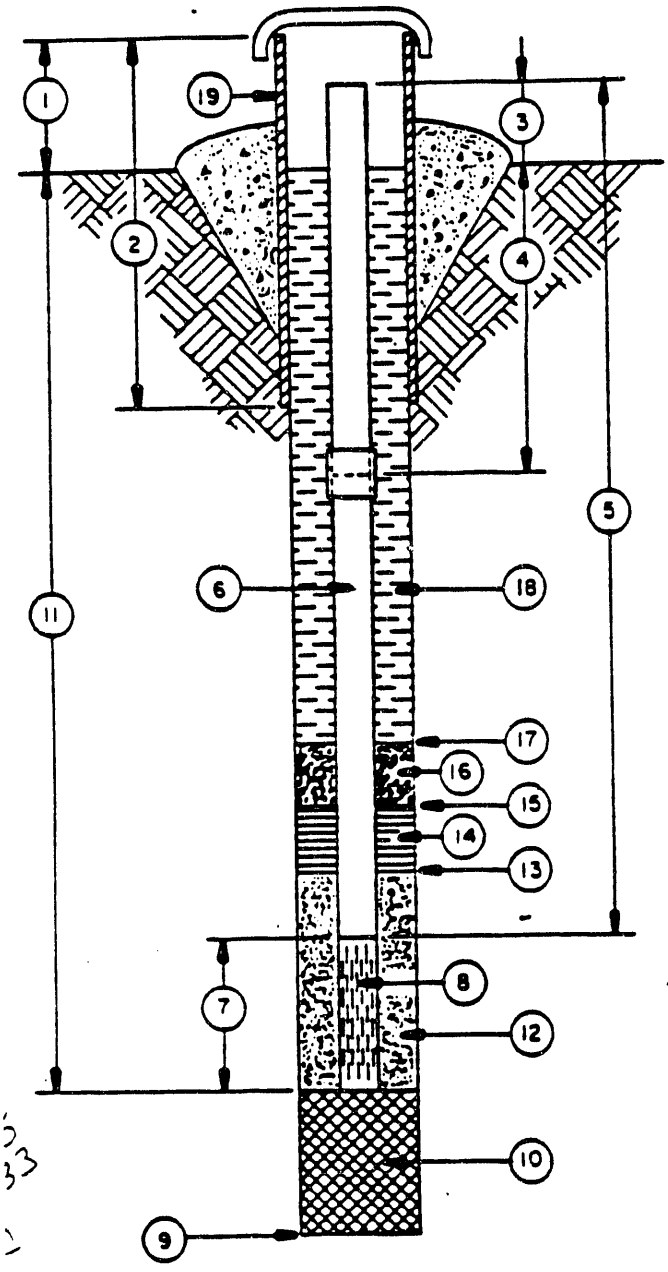

1. Height of Protective Casing Above Ground ~~2'~~ N/A
2. Total Length of Protective Casing ~~9'~~ N/A
3. Height of Standpipe Above Ground 2'
4. Depth to First Coupling 15
   Coupling Interval 15, 20, 20, 20, 20, 10
5. Total Length of Blank Pipe 95'
6. Type of Blank Pipe sch 40 PVC - 4"
7. Length of Screen 30'
8. Type of Screen PVC slotted - .014 - 4
9. Total Depth of Boring 125 Hole Diam. 10'
10. Type of Material sand & clay
11. Depth to Bottom of Screen 125
12. Type of Screen Filter pea gravel
    Quantity Used 29 bags
13. Depth to Top of Filter 90'
14. Type of Seal white sand
    Quantity Used 3 bags
15. Depth to Top of Seal 86
16. Type of Seal Weight N/A
    Quantity Used N/A
17. Depth to Top of Seal Weight N/A
18. Type of Grout cement
    Grout Mixture cement & water
19. Type of Protective Casing N/A
    Concrete Collar Mixture cement & water

Remarks: Have to redrill - grouted up screen

WELL DRILLING

FIELD ACTIVITIES LOG

DATE	ACTIVITY	TIME START	TIME FINISH	WELL I.D. # REMARKS
	Preparing			
2/6/84	Obtaining Supplies- 1) Casing Screen	9:00	10:00	
	2) Bentonite			
	3) Gravel			
	4) Water			
	Setting-up Equipment-			
2/3/84	1) Well Rig	1:00	2:00	
	2) Pump, compressor			
	3) Layout of Rods			
2:00	Drilling Hole - 1) Starting			
	2) Depth (Lunch ft.)	end of Day 50'		
2/7/84	3) Depth(Complete ft)	9:00	130	
2/9/84	Setting Screen/Casing-	1:00	2:00	
	1) Gravel Pack	2:10	240	[illegible]
	2) Sand	3:50	400	
2/9/84	3) Grout	8:00	12:00	grout this [illegible]
	Cleaning Site			pull pump

2/6/84 drilled to depth.

2/7/84 Hard to set casing [illegible]

2/8/84 put casing and gravel pack in Standpipe

2/14/84 Started to develope - screen is grouted up.

APPENDIX C

SRS HAZARDOUS WASTE PERMIT APPLICATION, VOLUME III, SECTION J.6.3 INVESTIGATION AND REMEDIATION OF NORTHEASTERN SECTOR OF A/M AREA

program do not constitute a significant change to the current Hazardous Waste Permit, and do not require a construction permit, it is recommended that implementation of these elements be allowed to advance. The wells would remain idle while the characterization proceeded culminating in a final design for the vacuum recovery unit. At that time SCDHEC would be notified of the final design, and the construction permit would be updated if required. The implementation schedule describes the projected time frames required to startup a system at a single site (either the A-014 outfall or the 321-M Solvent Storage Tank) and begins to address implementation of the program at other sites. SRS will report on progress in quarterly corrective action reports.

J.6.3 Investigation and Remediation of Northeastern Sector of A/M Area

Summary and Objectives

Recent monitoring results indicate groundwater contamination has occurred in the northeastern sector of the A/M Area in the vicinity of the Savannah River Laboratory complex resulting from past uses and disposal of solvents. These findings are significant due to the proximity to the plant boundary and the contamination of the Black Creek formation. Concentrations up to 15,000 parts per billion have been measured in the water bearing zones above the Ellenton Formation at well cluster MSB-47. SRS has developed and begun to implement plans to further assess the extent of contamination and to define the scope of remediation activities.

The overall objective of this program is to develop, design and put into operation a remediation system that will capture, remove, and treat groundwater contamination in the northeastern sector of the A/M Area near the SRL complex in a manner which protects human health and the environment. This program will compliment and enhance the existing remediation effort in the A/M Area. Removal of contaminants from this area will prevent the further spread of contaminants and prevent contaminants from entering the Black Creek Formation.

A comprehensive investigation program will precede implementation of the remediation system to identify the sources of contamination and to define the vertical and horizontal extent of the contaminant plume. The investigation program involves soil gas surveys, monitor well installations and geologic descriptions. Results from this program will then be used to strategically locate recovery wells to maximize the effectiveness of the remediation system.

The remediation system will be based on previously developed technology involving contaminant recovery and treatment. A series of extraction wells will remove the contaminant laden groundwater. The wells will feed an air stripper where the volatile compounds are effectively removed. Other engineered systems to be evaluated as part of the program to investigate and remediate in the southern sector (Section J.6.4) will also be considered for use in the northeastern sector.

A number of regulatory permits will be necessary to construct and operate the remediation system. Once operational, the recovery wells and air stripper near the SRL complex will become an integral part of the current remediation system from a regulatory standpoint. SRL will operate and maintain the facility, and RMET will be responsible for reporting to SCDHEC. System performance data will be included in quarterly reports as required in the hazardous waste permit, and defined by SCHWMR [264.100].

The investigation and remediation program is intended to satisfy condition V.A.3 in the SRS Hazardous Waste Permit which require continued assessment of upgradient and Black Creek contamination to identify sources and to continue implementing a corrective action program to address new areas of contamination.

Background

Initial Assessment

The potential for groundwater contamination in the northeastern sector of A/M Area was originally projected based on results from nearby monitor wells (e.g., ASB-8). This area was identified in the SRS Groundwater Quality Assessment Plan (USDOE, 1985) as a suspected location where solvents enter the Black Creek formation. Figure J-11 shows the location of the suspect area which was based on the locations of contaminated wells and the flow lines to those wells along with preliminary evidence that the clays of the Ellenton Formation, which serve as an effective aquitard over most of the A/M Area, may have discontinuities in the vicinity of the SRL complex. As a result, new monitor wells were installed under the Phase IIA, IIB and III Well Drilling Programs to delineate the extent of contamination in this area.

Recent Findings

Table J-4 lists sample results from the Phase IIB monitor wells which were first sampled during fourth quarter 1987. Resamples are also listed which generally confirm initial findings. The results indicate significant groundwater contamination in the vicinity of the Savannah River

Laboratory complex. Of particular concern, 548 parts per billion of trichloroethylene was detected in monitor well MSB-47TA, which is screened in the Black Creek formation. More shallow zones at the MSB-47 cluster also show significant trichloroethylene contamination as high as 14,800 parts per billion in the upper Congaree unit. A map showing the location of the Phase IIB wells is presented as Figure J-12.

Results from monitor wells in the MSB-54 cluster located near the SRS boundary show no contamination above detection limits. These results, along with data from existing wells in this area, indicate contamination has not moved offsite.

Initial conclusions have been developed based on these results. First, the solvent contamination found at the MSB-47 monitor well cluster was anticipated based on projections from previous monitoring results. The magnitude was somewhat higher than expected, however. The contamination is likely a small localized plume separate from the M-Area plume and the source is likely a result of past uses and disposal of solvents within the SRL complex. Results indicate the contamination has apparently moved more vertically (downward) than horizontally, with the highest levels in the upper Congaree unit.

Contamination in the Black Creek formation in this area is apparently resulting from downward migration from overlying units. The Ellenton clay layer, which provides a protective barrier across much of SRS, may have discontinuities in this area.

Potential Sources

A discussion of the potential sources of degreasing solvents in the A/M Area is presented in Section F. A summary of degreaser solvent use within the SRL is presented below. The locations discussed are shown on Figures J-13 and -14.

The primary location where degreasers were used in SRL was in the fabrication laboratory located in the basement of Building 773-A (Figure J-14). SRL operated the degreasers in support of the metallurgical fabrication operations in M Area. From 1954 to 1955, two 450 gallon degreasers were installed in the chemical cleaning rooms of the fabrication laboratory. Wastes were sent to the tradewaste tributary leading to the A-001 outfall (Figure J-14).

The degreaser facilities were used 70 to 80 percent of the time in the 1950's when consumption of solvent was 30 to 40 drums per year. During the 1960's usage declined to a 30 percent utility rate. Each degreaser was equipped with a still to recover solvent. Once or twice, soda ash was used

to boil out the still bottoms (grease). That solution was sent to the tradewaste stream. In 1962, a 30 gallon degreaser was added to support the nickel plating facility. In 1964, because of declining usage, one of the 450 gallon degreasers was removed from service and in 1973, the 30 gallon degreaser was removed from service. Also in 1973, the solvent used in the remaining degreaser was changed from trichloroethylene to tetrachloroethylene. In 1979, the solvent was to be changed to 1,1,1-trichloroethane, but usage had so declined that the old solvent was unloaded and the new solvent was never put into the degreaser. The degreasers have been inactive since 1979.

Program Elements

Source Identification and Plume Definition

Personnel Interviews

A series of personnel interviews were conducted to learn more about the uses of degreasing solvent within the SRL complex. Long-term service personnel were interviewed to identify major solvent users in order to update information presented in Section F. From these interviews, it was found that trichloroethylene was used extensively in the shielded cells (high level caves) which discharged into the high level drain. The largest use, however, was in the Fabrication Laboratory where mock-ups of the M-Area degreasing units were tested. Waste from the Fabrication Laboratory was discharged through an underground process sewer to the A-001 Outfall (Figure J-14). It is also likely that solvents were used infrequently in other sections of the building (such as the machine shop) as floor cleaner or other purposes.

The interviews identified two potential source locations: (1) the main SRL building(s) including the Fabrication Laboratory and miscellaneous operations, and (2) the tradewaste tributary leading to Outfall A-001.

In addition to this primary use, a few miscellaneous uses of solvents in the laboratories were identified, primarily in conjunction with laboratory support (parts cleaning and machining) and decontamination in the high level caves. There is no evidence for releases of solvents from these miscellaneous operations.

Soil Gas Surveys

As a result of the interviews and the findings at MSB-47, SRS performed a limited soil gas survey of the area. Soil gas surveys involve collecting a small soil core at a depth of approximately 45 centimeters for analysis of trace levels of

solvents. Measurement of solvents indicates that a source of chlorocarbons to the subsurface environment is nearby. During this limited survey, fifty-one individual locations were tested around suspected source areas as shown on Figure J-14. Results are discussed below.

Initially, a soil gas survey was conducted along the three open drainage ditches which converge at the A-001 Outfall (Figure J-14). The results showed that only the middle drainage ditch had significant soil gas levels. The middle drainage receives discharges from the SRL process sewer which, in the past, included wastes from the Fabrication Laboratory. A soil gas survey was also conducted in the wooded area to the north of the SRL complex. Empty drums and other items were found during this survey; however, no significant soil gas levels were detected.

A second set of soil gas surveys was conducted near the MSB-47 well cluster, around the A-001 Outfall drainages, and within the SRL complex near the Fabrication Laboratory. The results showed that the area near MSB-47, including the wooded area and just inside the fence, had no significant solvent levels in the soil gas. The drainages showed lower soil gas levels compared to previous measurements but in similar patterns. Low spots in the ditches had higher levels where solvent possibly accumulated.

The highest soil gas levels were measured near the Fabrication Laboratory building. Moderate trichloroethylene levels were measured at one location while significant tetrachloroethylene levels were measured at another location. The latter sample location was close to the machine shop drum storage facility.

The soil gas survey confirmed the presence of trace levels of solvents near Building 773-A and the tradewaste tributary. No other source locations were detected, either in the vicinity of well cluster MSB-47 or near other SRL buildings. While the number of samples was not sufficient to yield a definitive answer, the results will assist in locating the additional monitoring wells that will be required.

Proposed Additional Monitor Wells

To define the vertical and horizontal extent of the contaminant plume in the groundwater, fourteen new monitor wells will be installed as part of the Phase III Well Drilling Program. Wells will be installed in four clusters of three to four wells screened in the various zones within the uppermost aquifer. Two of the clusters will contain wells screened in the Black Creek formation. Cluster locations are discussed below and are shown on Figure J-15.

Four wells will be installed at MSB-66 screening the water table, upper Congaree, lower Congaree, and Black Creek units. These wells will define the southern extent of the plume and delineate the SRL plume from the M-Area plume.

MSB-67 will contain three wells screened in the water table, upper Congaree, and lower Congaree units. This location was selected to identify the source of contamination near the 773-A building.

A water table, upper Congaree, and lower Congaree well will be installed at MSB-68 to delineate the suspected source of contamination associated with the tradewaste outfall and ditches.

Finally, four wells will be installed at MSB-69 screened in the water table, upper Congaree, lower Congaree, and Black Creek units. These wells will confirm that contaminants are not migrating towards the plant boundary and will provide further information on the controlling geological features.

Monitor well drilling and construction will be performed in accordance with approved procedures. Independent supervision will be provided by qualified consultants to ensure quality control during well installations.

Geologic Description

Geologic cores and geophysical logs will be collected during well drilling to supplement the current geologic database for the A/M Area. Core descriptions and log analyses will be performed by qualified geologists standardized descriptive techniques. Once the preliminary analysis is completed, the information will be combined with existing data presented in Section D to formulate an updated interpretation of the geologic framework. Depositional modeling and contouring of the thickness and structure of each geologic unit will be performed. The primary focus will be to identify any discontinuities or pathways through the Ellenton clay unit.

<u>Remediation System</u>

Recovery Wells

The number and location of recovery wells will be determined based on the extent and distribution of contamination, the desired hydrologic effect, and the logistics of installation. Possible locations have been selected based on current knowledge of sources and extent as shown on Figure J-16. At this time, two locations are anticipated. The first location, RWM-12, was selected to address the suspected source near the Fabrication Laboratory while RWM-13 is located in the vicinity of the tradewaste tributary. SRS may

desire to install additional recovery capacity leading to more rapid mitigation in this area. Engineering evaluations to be conducted as discussed below (Section J.6.4) may be applied to this area. In the case where remote recovery may be applicable to the Northeastern Sector SRS may petition SCDHEC to allow non-erosive land disposal of treated water from remote recovery wells.

A different recovery well design from the design used in M-Area is recommended for the SRL system based on the vertical distribution of contamination. The wells will be designed to screen only selected zones of high contamination or high water production instead of the fully penetrating screen design used in M-Area. This will allow selective pumping of contaminated zones while avoiding pumping of clean zones. This approach is more costly, however, since more wells are necessary to screen individual zones. Figure J-17 shows a preliminary design schematic. Other design considerations will be considered for cost savings including using 4- or 6-inch casing and converting monitor wells to recovery wells.

Selection of recovery well screen zones will be based on the indications of where contaminants are present. For example, new data from the Phase III wells (specifically the MSB-69 cluster) suggest that the contamination is present almost exclusively in the upper Congaree unit; wells screening the water table well and lower Congaree do not indicate the presence of contaminants above the 1ppb detection limit. SRS intends to use this data to select screen zones in this vicinity, along with data from other monitoring wells being installed in this area.

Recovery well drilling and construction will be performed in accordance with approved procedures. Independent supervision will be provided by qualified consultants to ensure quality control during well installations.

Air Stripper

A separate, stand-alone air stripping unit will be supplied for the SRL remediation system as opposed to tying new recovery wells into the existing M-Area system. A prototype air stripping unit, which was operated during an experimental program in M-Area, is available for use with the SRL system. This unit was fully tested for over 12 months and was demonstrated to have sufficient capacity, high efficiency, and excellent reliability (see Section J.4.1). Based on the anticipated scope of the SRL program, the M-Area prototype air stripper is suitable. If additional recovery/treatment capacity is required SRS will utilize alternate technologies as described in Section J.6.4.

A proposed new site for the prototype air stripper has been selected as shown on Figure J-16. The SRL complex was

surveyed for potential locations using criteria developed to ensure easy accessibility with minimal interferences:

- **Available Space** - The selected area must have a radius equal to the height of the column.

- **Utility Access** - Electrical power and instrument air should be available.

- **Proximity to Recovery Wells** - The column should be located as close to new recovery wells as possible to minimize the length of transfer lines.

- **Outfall Access** - Locations allowing gravity flow should be given priority over locations requiring forced flow.

- **Security Considerations** - The stripper should be located within an existing or newly fenced area. All structures must be 20 feet from fence lines.

The proposed location satisfied all of the above criteria; however, a new fence enclosure and lock will be required to limit access to the stripper. In addition, the proposed location will not interfere with future construction activities in the area. Power and air utilities are available from the SRL complex. A trench carrying both electrical power and air lines will be provided to the proposed location. There is also excellent access to the A-001 outfall using gravity flow.

A preliminary plan has been developed to move the prototype air stripper from its present location in M-Area to the new location near the SRL complex. The major steps involved are described below:

- **D&R Column and Equipment** - The stripper column and all associated supports, piping, and instruments will be dismantled and removed from the present location. Most of the piping and instrumentation will be salvaged and used at the new location. Any unusable materials will be discarded. The old site will be restored to original conditions including removal and disposal of the foundation.

- **Refurbish Column and Control Instruments** - Once disassembled the column will be thoroughly cleaned in preparation for new service. All old packing material will be replaced with new packing. Any inoperable control instruments, gauges or other ancillary equipment (pumps, valves) will be replaced.

- **Prepare Site** - The new location will require minimal ground preparation work. A new column foundation will be

required, however. A design similar to the one constructed in M-Area will be used.

- **Transport Column** - The refurbished column will be loaded on a flat-bed and transported to the new location.

- **Erect Column** - After constructing the foundation, the column will be erected and all support structures put in place. This will be followed by installation of piping, instrumentation and utilities.

Transfer Lines

Underground transfer lines will be installed linking the recovery wells to the air stripper. In general, the transfer lines will be 2- to 3-inch plastic pipe (PVC or PE). All electrical and communications wiring between the wells and the control systems will be installed at the same time transfer lines are installed.

Drain Line and Outfall

Treated effluent from the air stripper will be discharged by gravity flow via a new drain line to the existing ditches that lead to the A-001 Outfall. Currently, a nominal 20 gallons per minute is discharge to the outfall. Due to the substantial increase resulting from the stripper discharges, it is anticipated that some modifications to the existing ditches and outfall will be necessary to accommodate the increased flow.

Permitting

Several permits must be obtained from SCDHEC before construction work associated with the air stripper system may begin. Monitor well and recovery well installations are generally approved by SCDHEC through verbal and written communication and do not require a formal permit.

Wastewater and Air Quality Control

A new wastewater construction permit and air quality control permit must be obtained for the prototype stripper before any construction work can begin associated with the stripper system. Using design and operating information developed from the previous use of the prototype air stripper, both permit applications will be prepared and forwarded to the SCDHEC Wastewater and Air Quality Control Bureaus. Once construction has been completed, SCDHEC must inspect the facility before issuing an operating permit.

NPDES

The SRS NPDES Permit will be modified such that treated groundwater may be released to the existing A-001 Outfall. Permit limits will be established for the degreaser solvents (trichloroethylene and tetrachloroethylene) treated by the air stripper.

Groundwater samples will also be collected in SRL vicinity for priority pollutant analysis. Results from these samples will show whether other constituents, if any, are present that may require treatment before releasing.

Operation

Before the air stripper system is placed in service, an inspection by the SCDHEC Wastewater Bureau must be completed. Upon satisfactory completion of this inspection, SCDHEC will issue an operating permit.

SRS will conduct a series of run-in and startup tests with the column prior to turnover. These tests will ensure the system is functioning properly and to troubleshoot equipment/instrument problems. Performance tests will also be conducted to demonstrate stripping efficiency at the rated capacity.

Once the inspections and run-in tests have been completed, the air stripper system will be placed in normal operation. Although the system is designed to operate relatively maintenance-free, periodic inspections will be conducted to ensure proper functioning of equipment and to collect operating data. SRS will collect routine samples of the column effluent to monitor performance and report results to SCDHEC.

Program Summary and Implementation Schedule

A general program summary/flow chart showing how the program will proceed is shown on Figure J-18. A preliminary implementation schedule has been developed as shown on Figure J-19. Several factors may impact meeting this schedule, however, including budgetary constraints, manpower availability, and permitting approval.

Figure J-11.
Location of Phase IIB Wells

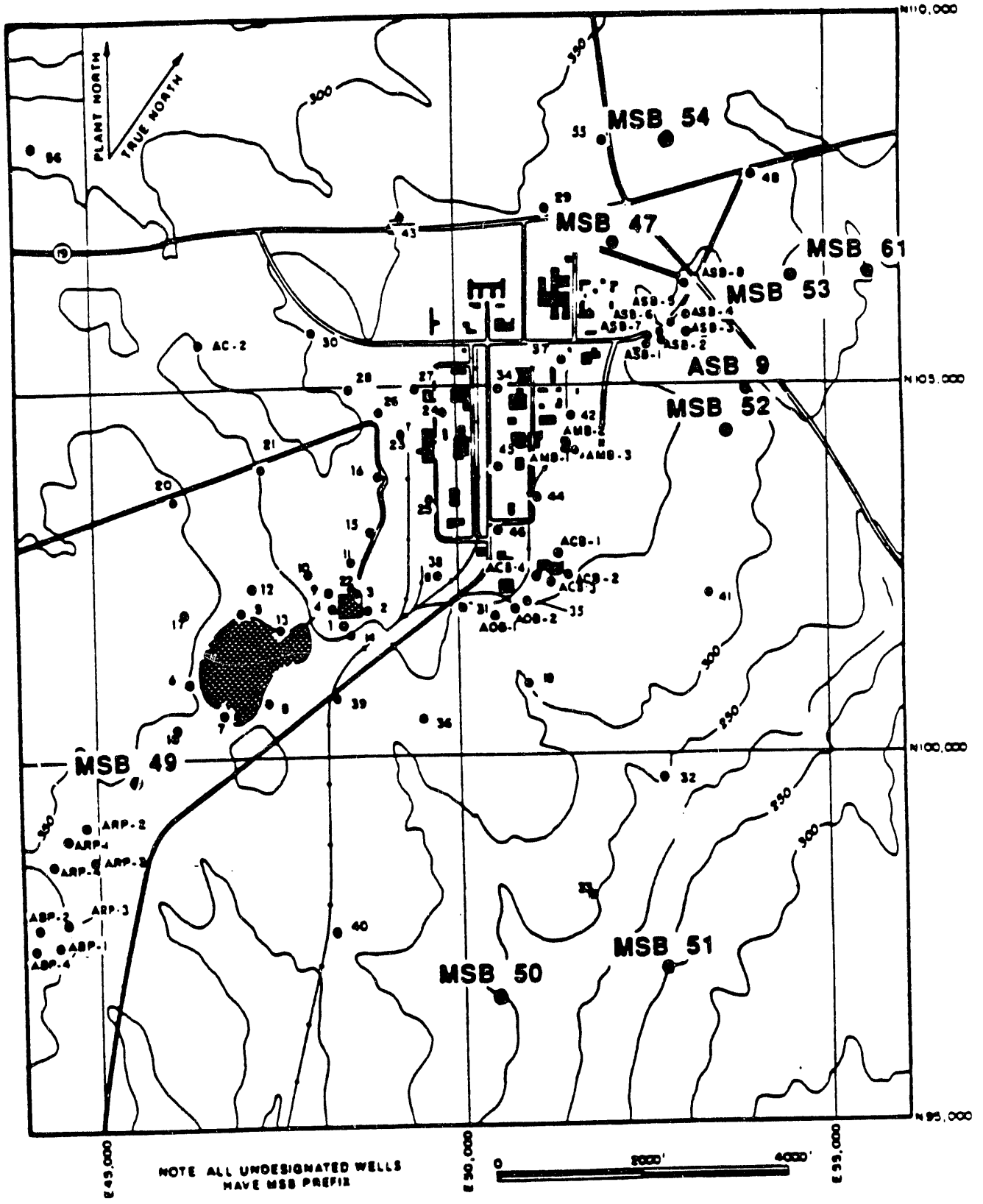

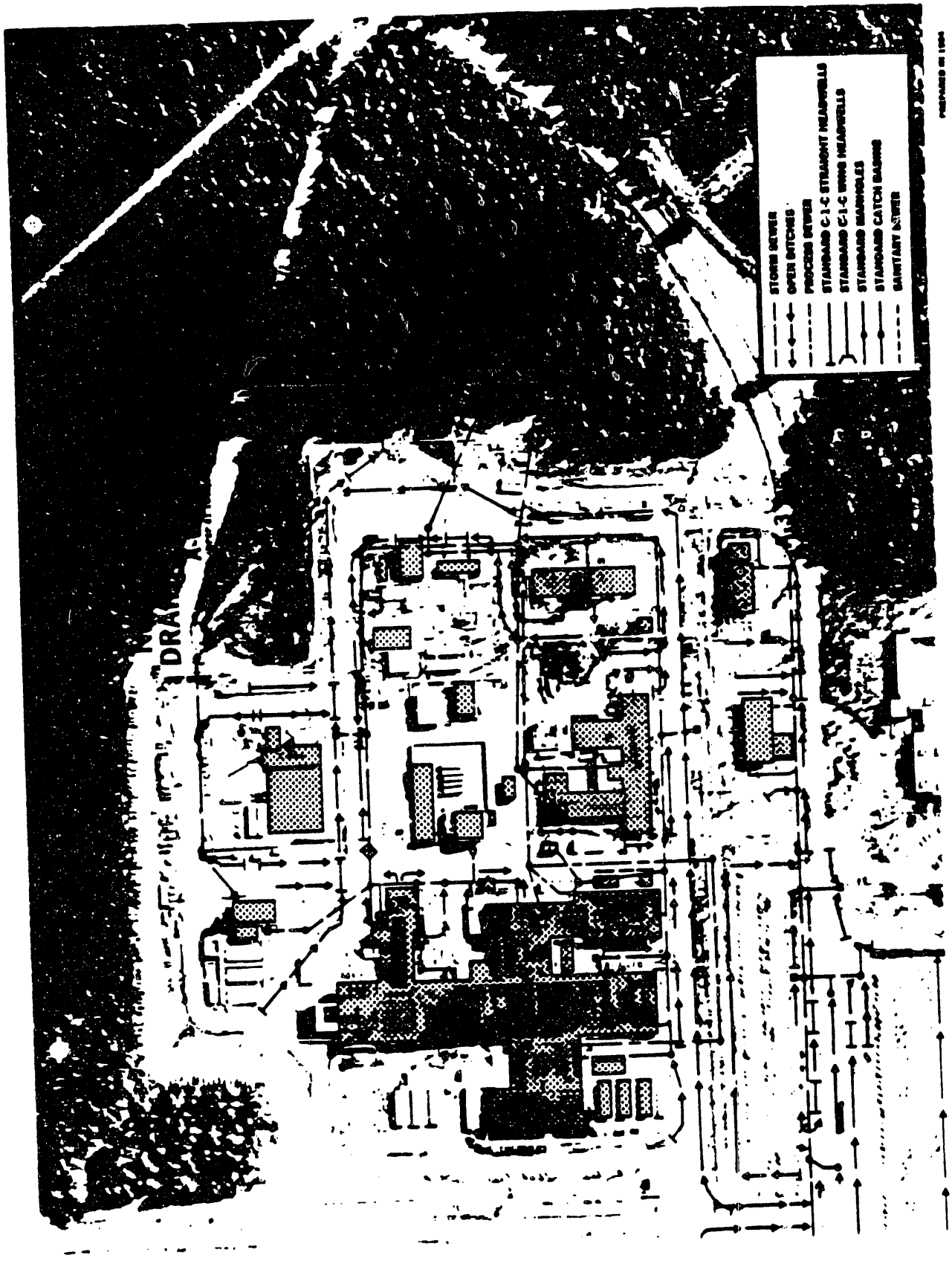

BASE 5 NPDES OUTFALLS & DRAINAGE PATTERNS A-1/A-3 (SOURCE DPSP 81-1045)

Figure J-13.
Location Of Soil Gas Measurements

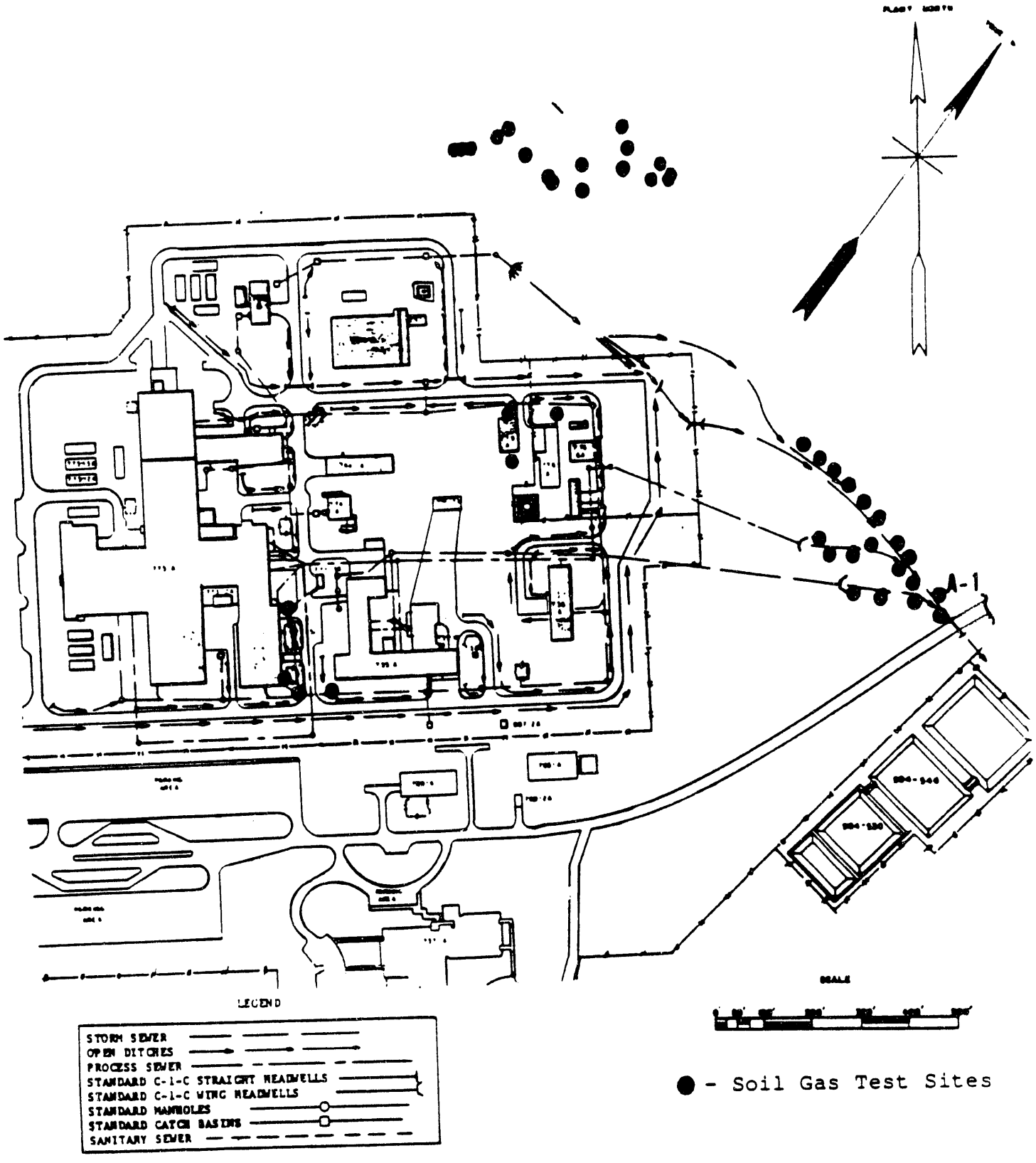

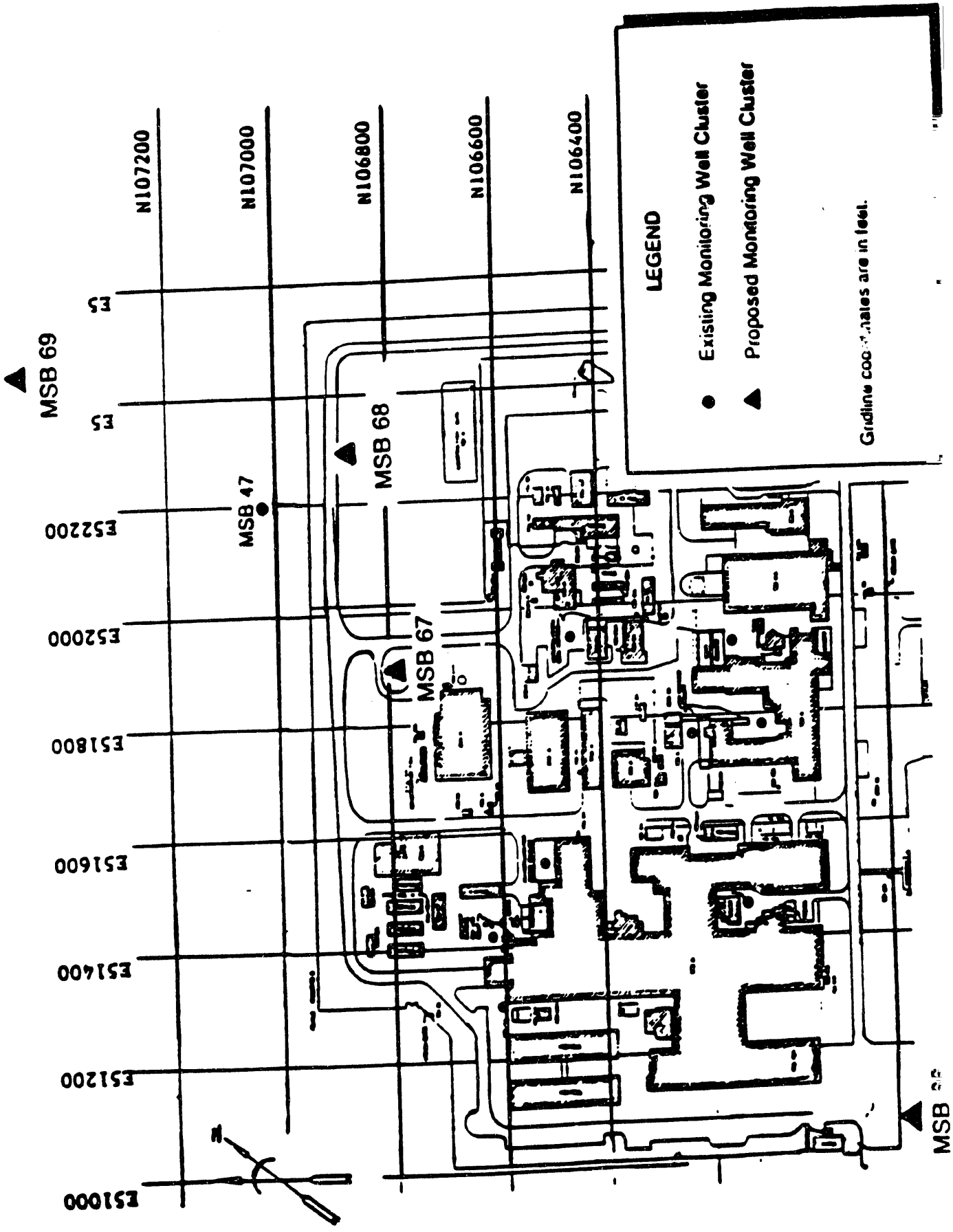
N107200
N107000
N106800
N106600
N106400
E5
E5
E52200
E52000
E51800
E51600
E51400
E51200
E51000
MSB 69
MSB 47
MSB 68
MSB 67
LEGEND
Existing Monitoring Well Cluster
Proposed Monitoring Well Cluster
Gridline coordinates are in feet.
N

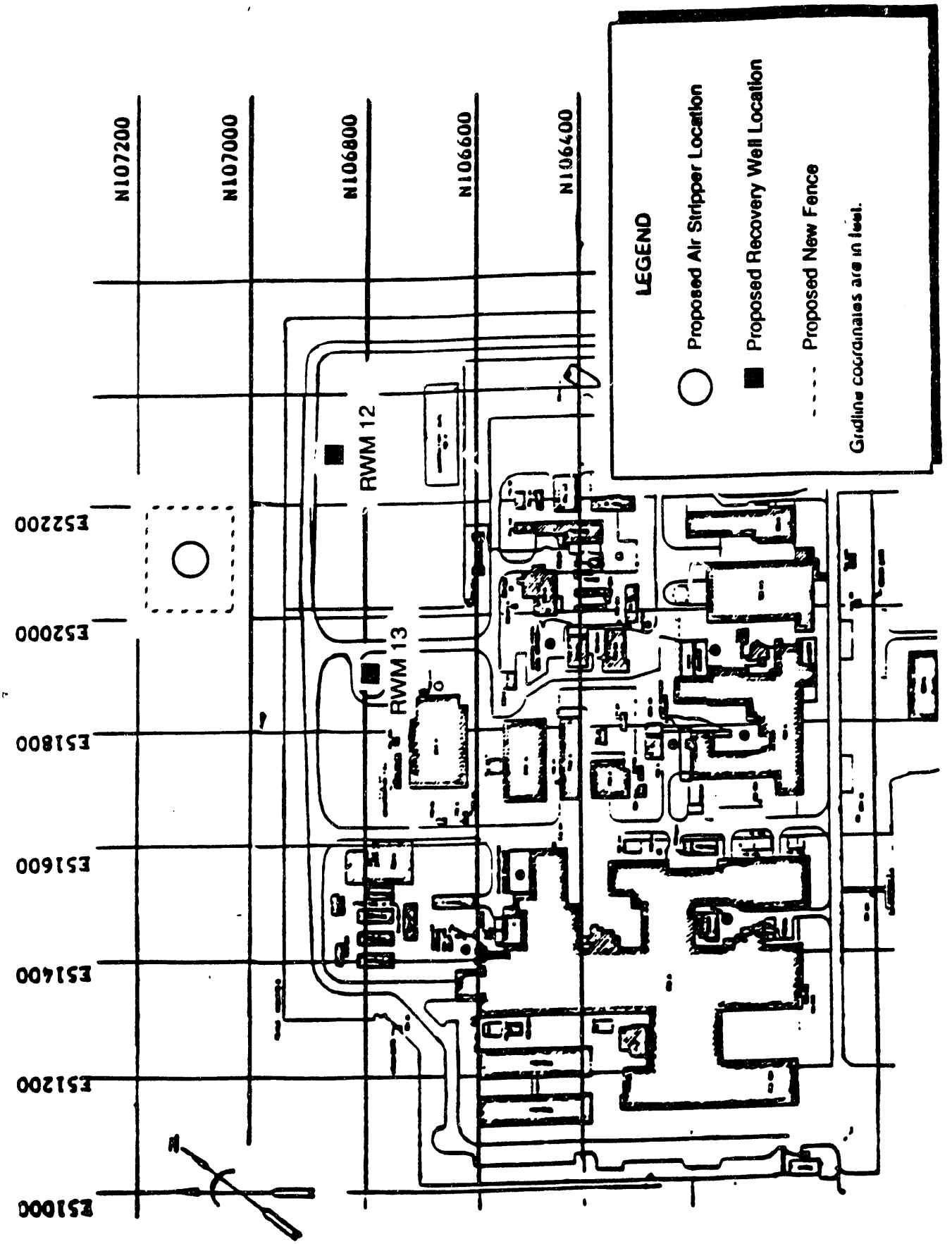

Figure J-15.
Proposed Recovery Well and Air Stripper
Locations near the SRL Complex

Figure J-16.
Recovery Well Design Schematic

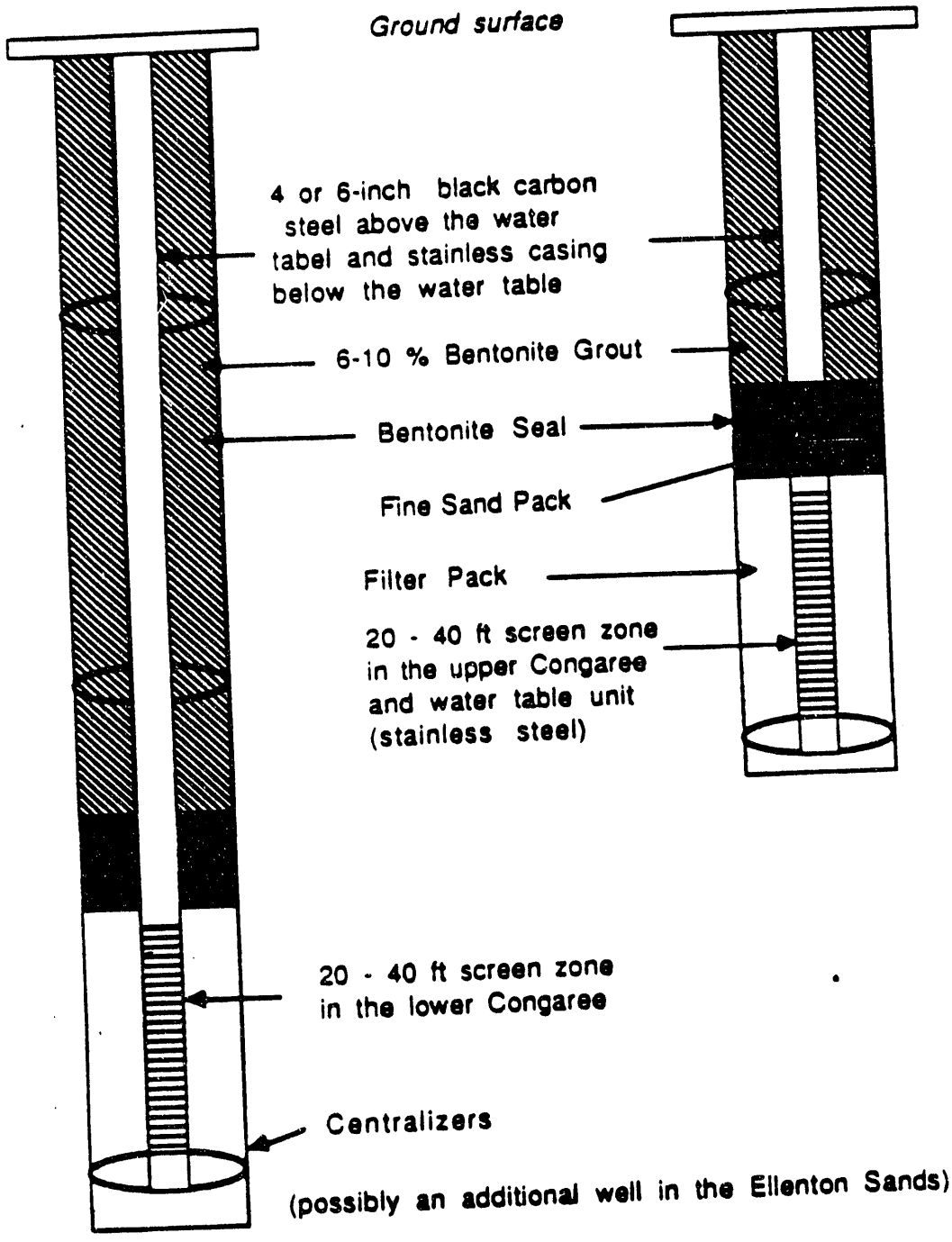

FIGURE J-17.

Implementation Schedule for the SRL Groundwater Investigation and Remediation Program

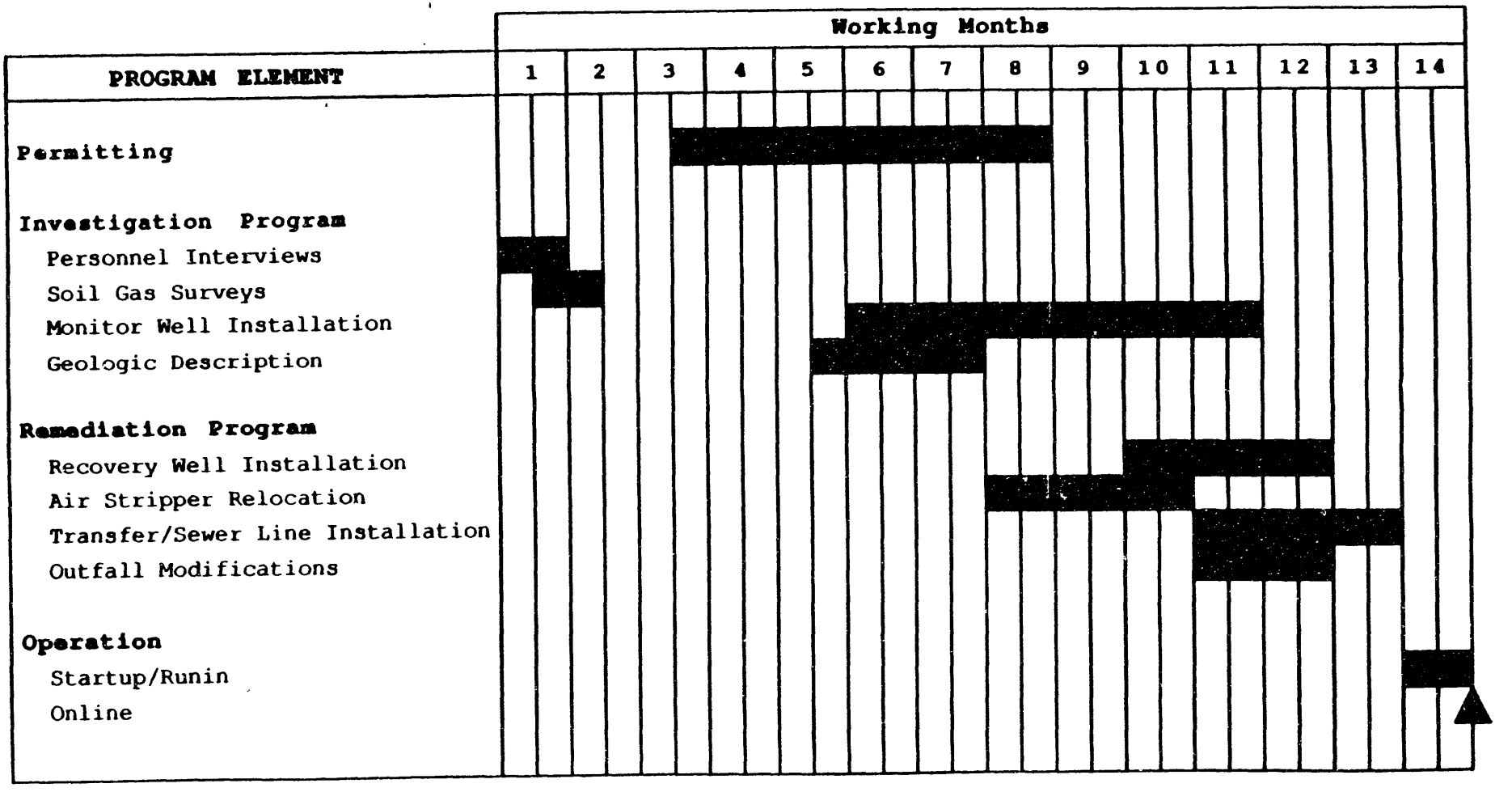

C-17

Figure J-18.
General Well Location Map Showing Existing and Planned Well Locations

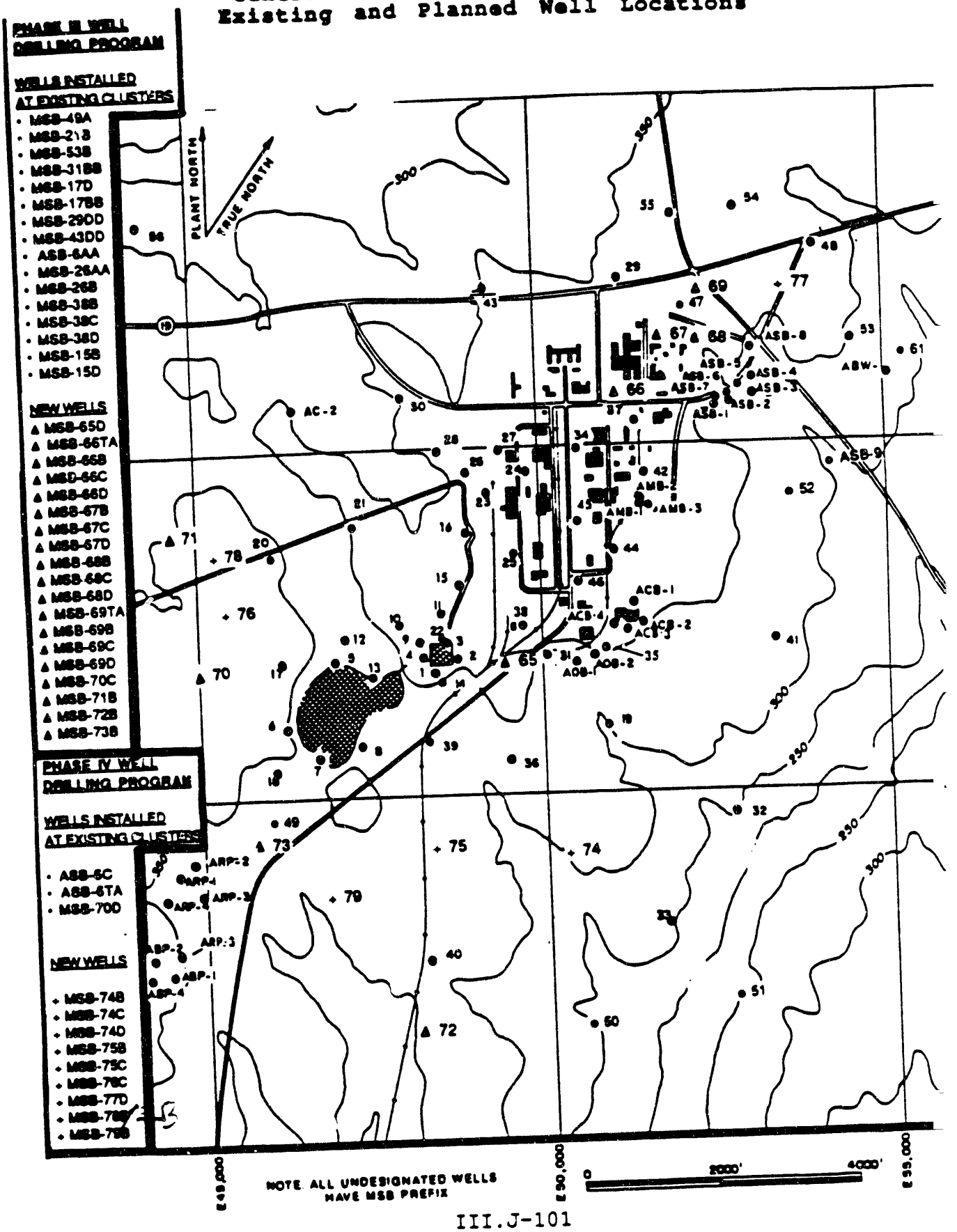

Figure J-19.
Implementation of Investigation Program
in Southern Sector of A/M Area

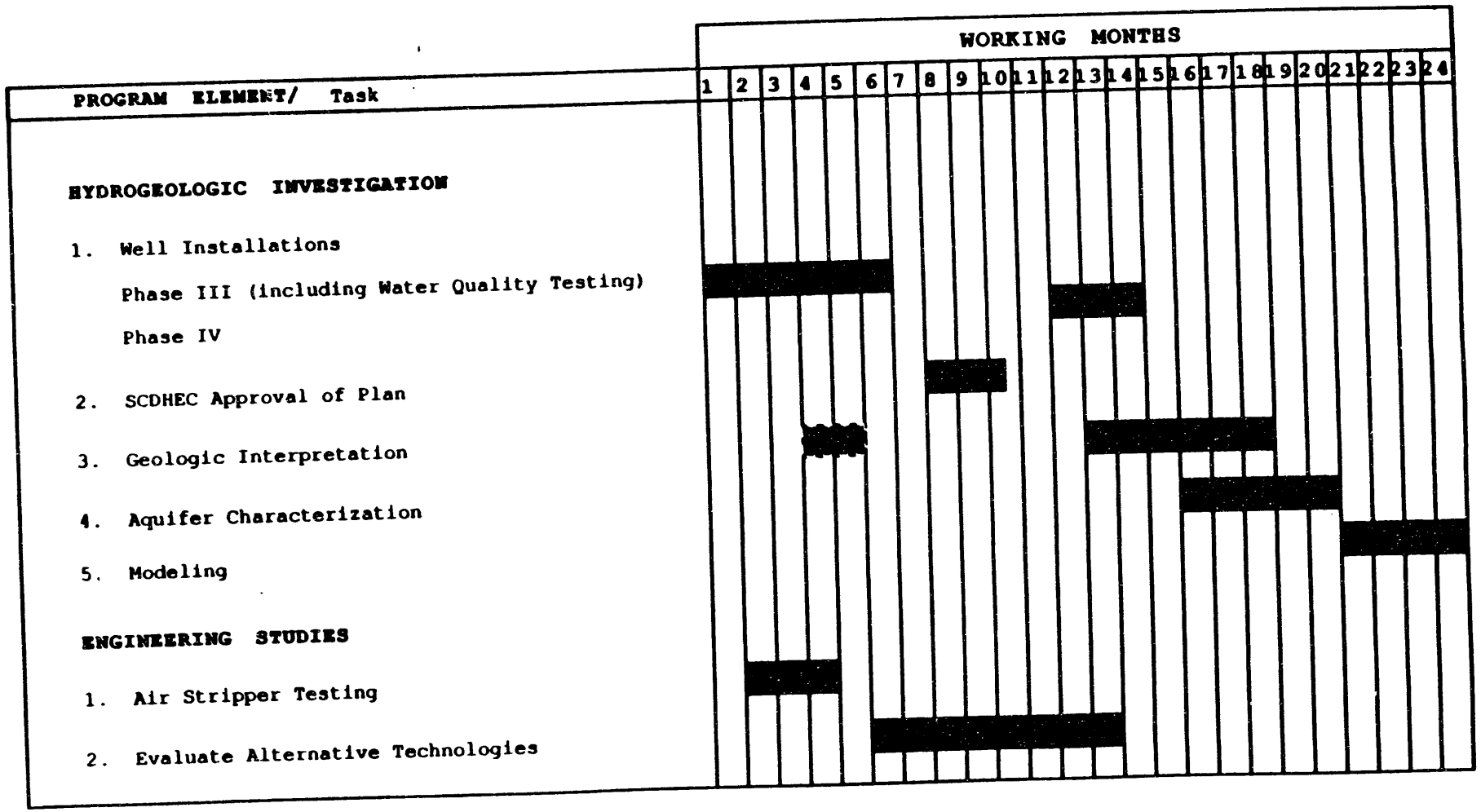

C-19

END

DATE FILMED

12 / 31 / 92