MASTER

RADIOISOTOPE-POWERED CARDIAC PACEMAKER PROGRAM

FINAL REPORT

THE CLINICAL STUDIES OF THE NUCLEAR PACEMAKER MODEL NU-5

ARCO MEDICAL PRODUCTS COMPANY

A SUBSIDIARY OF ATLANTIC RICHFIELD COMPANY

AC02-76ER 03057

NRC CONTRACT NO. AT (11-1)-3057

June, 1980

DISCLAIMER

This book was prepared as an account of work sponsored by an agency of the United States Government. Neither the United States Government nor any agency thereof, nor any of their employees, makes any warranty, express or implied, or assumes any legal liability or responsibility for the accuracy, completeness, or usefulness of any information, apparatus, product, or process disclosed, or represents that its use would not infringe privately owned rights. Reference herein to any specific commercial product, process, or service by trade name, trademark, manufacturer, or otherwise, does not necessarily constitute or imply its endorsement, recommendation, or favoring by the United States Government or any agency thereof. The views and opinions of authors expressed herein do not necessarily state or reflect those of the United States Government or any agency thereof.

DISTRIBUTION OF THIS DOCUMENT IS UNLIMITED

DISCLAIMER

This report was prepared as an account of work sponsored by an agency of the United States Government. Neither the United States Government nor any agency Thereof, nor any of their employees, makes any warranty, express or implied, or assumes any legal liability or responsibility for the accuracy, completeness, or usefulness of any information, apparatus, product, or process disclosed, or represents that its use would not infringe privately owned rights. Reference herein to any specific commercial product, process, or service by trade name, trademark, manufacturer, or otherwise does not necessarily constitute or imply its endorsement, recommendation, or favoring by the United States Government or any agency thereof. The views and opinions of authors expressed herein do not necessarily state or reflect those of the United States Government or any agency thereof.

DISCLAIMER

Portions of this document may be illegible in electronic image products. Images are produced from the best available original document.

TABLE OF CONTENTS

	Page
Summary	1
Purpose	2
Device Under Study	2
Clinical Implant Status of the Nuclear Pacemakers	2
Clinical Implant Status of the Control Pacemakers	3
Statistical Analysis of Reliability	3
Statistical Analysis of Longevity	4
Patient Population Characteristics	4
Nuclear Pacemaker Accountability and Follow-up	4
Closeout	4,5
Bibliography	6

APPENDIXES

Appendix A	Summary of Explanted Nuclear & Control Pacemakers	7
Appendix B	Reasons for the Explant of a Pacemaker	8

FIGURES

Figure		Page
1	Photograph of the Radioisotope Powered Cardiac Pacemaker Nu-5 . . .	9
2	Cutaway View of the Radioisotope Powered Cardiac Pacemaker Nu-5 . .	10
3	Estimated Survival Distribution and Lower 95 Percent Confidence Bound for Nuclear Pacemakers	11
4	Estimated Survival Distribution and Lower 95 Percent Confidence Bound for Control Pacemakers	12
5	Nuclear Pacemaker Population	13
6	Control Pacemaker Population	13

TABLES

Table		Page
1	Characteristics and Nominal Design Specifications at Body Temperature (37° C) Across 500 Ohm Load	14
2	Nuclear Pacemakers Implanted	15-18
3	Nuclear Pacemakers Explanted	19-20
4	Control Pacemakers Implanted	21
5	Control Pacemakers Explanted	22-24
6	Percent of Treatment Failures and Average Monthly Treatment Failure Rates	25

SUMMARY

Beginning in February, 1970, the Nuclear Materials and Equipment Corporation (NUMEC) undertook a program to design, develop and manufacture a radioisotope powered cardiac pacemaker system. This work was initiated under Contract Number AT(30-1)-4189 between NUMEC and the United States Atomic Energy Commission (AEC). The original contract was subsequently modified, effective December 1, 1972 (Modification No. 12 Supplemental Agreement to Contract Number AT(11-1)-3057), with regard to work scope, and ARCO Nuclear Company, and the ARCO Medical Products Company became the successors to NUMEC. NRC Contract No. AT(11-1)-3057 replaced Contract No. AT(30-1)-4189 in its entirety. The scope of technical work was specified to be:

1. Establish system, component, and process cost reduction goals using the prototype Radioisotope Powered Cardiac Pacemaker (RCP) design and develop production techniques to achieve these cost reduction objectives.

2. Fabricate radioisotope powered fueled prototype cardiac pacemakers (RCP's) on a pilot production basis, using the reduced cost techniques developed in subsection 1 above.

3. Conduct liaison with the National Institutes of Health.

4. Conduct liaison with a Government-designated fueling facility for purposes of defining fueling requirements, fabrication and encapsulation procedures, safety design criteria and quality control and inspection requirements.

5. Develop and implement Quality Assurance and Reliability Programs.

6. Conduct performance, acceptance, lifetime and reliability tests of fueled RCP's in the laboratory.

7. Conduct liaison with Government specified medical research institutions selected for the purpose of undertaking clinical evaluation of the RCP in humans as required by the Commission.

8. Monitor and evaluate, on a continuing basis, all test data.

9. Perform necessary safety analyses and tests.

Pacemaker designs were developed and quality assurance and manufacturing procedures established. Prototype pacemakers were fabricated. A total of 126 radioisotope powered units were implanted and have been followed clinically for approximately seven years. Four (4) of these units have failed. Eighty-three (83) units remain implanted and satisfactorily operational. An overall failure rate of less than the target 0.15 percent per month has been achieved.

I. Purpose

The purpose of this final technical report is to summarize the data and results of the Expanded Clinical Study of the ARCO Medical Products radioisotope powered cardiac pacemaker. The study guidelines, standards for patient selection, implantation requirements, and follow-up schedules, are contained in the Research Protocol for Clinical Evaluation of the NU-5 Model Nuclear Pacemaker dated March 25, 1974.[3]

II. Device Under Study

The NU-5D Model Pacemaker consists of a Plutonium-238 oxide electro-conversion source that supplies power to a CMOS hybrid electronic circuit. The demand unit is R-wave inhibited. Design specifications and operating characteristics for the NU-5D Pacemaker are listed in Table I. A photograph of the pacemaker is shown in Figure 1 with a cutaway view shown in Figure 2.

III. Clinical Implant Status of the Nuclear Pacemakers

The NU-5 Model radioisotope powered cardiac pacemaker has been implanted in humans for a period of seven years. The first implants were made on April 9, 1973, concurrently at the Newark Beth Israel Medical Center in Newark, New Jersey and at the National Institutes of Health in Bethesda, Maryland. A total of 126 NU-5 Model Nuclear Pacemakers were implanted. Eighty-three (83) pacemakers remain implanted, 43 having been explanted due to various complications. Of the original 126 pacemakers, 59 were fixed rate (NU-5F) and 67 were demand pacemakers (NU-5D). A total of 560.7 pacemaker years, or 6728 unit months of operational data has been accumulated for an average follow-up per patient of 53.4 months. Current projections indicate with a 90% confidence that a mission time of 11 years or more at 95% reliability will be achieved.

Tables 2 and 3 are computer printouts of the Nuclear Pacemakers Implanted and the Nuclear Pacemakers Explanted, respectively. The pacemakers are listed in numerical order with the fixed rate units first, followed by the demand units. These tables include the vital data on each pacemaker including the number of days each pacemaker has been implanted. Several segments of the data have been coded as follows: (1) the physician, (2) the hospital, (3) the manufacturers' listing, and (4) the reason a pacemaker has been explanted. The first three data codes are being maintained at ARCO Medical on a confidential basis, while legend for the reason for explanting is provided in Appendix B.

A summary of all the pacemaker removals is included in Appendix A. An engineering evaluation of each of the returned pacemakers has been conducted and the results are reported in the righthand column of Table 3 in condensed form.

IV. Clinical Implant Status of the Control Pacemakers

There were also a total of 80 control non-nuclear pacemakers implanted resulting in 252 unit years, or 3024 unit months of operational data being accumulated and analysed with an average follow-up per patient of 37.8 months. This control group was comprised of 65 mercury-zinc powered, 9 lithium iodine powered, and 6 lithium thionyl chloride powered pacemakers.

Among the 65 mercury-zinc powered pacemakers, there have been 52.3% (34 units) removals, and 47.7% (31 units) failures. Thirty (30) of these 31 failures were due to the mercury-zinc battery depletion, and the remaining one, a random failure, occurred 396 days after implant. At the time of implant, mercury-zinc pacemakers were expected to fail due to battery depletion in less than 5 years. Clinical observation shows a 2.9 year average service life has been achieved. None of the 15 lithium pacemakers has failed. Six (6) have been removed and nine (9) are still functioning. Additional data on the control pacemakers implanted and the control pacemakers failed and removed is contained in Tables 4 and 5 respectively.

V. Statistical Analysis of Reliability

Statistical analysis of the clinical data indicates that the estimated survival probability of the nuclear pacemaker is significantly greater than that of the battery powered control pacemakers, 0.956 vs. 0.1227 at seven years respectively.

One of the statistical evaluation procedures proposed by the Nuclear Regulatory Commission (NRC)[4] to establish acceptable performance of radioisotope powered pacemakers and to terminate further clinical evaluation was based upon demonstrating to a high degree of confidence that the failure rate experienced was less than that of an acceptable standard. A pacemaker was considered to have failed if for any reason it fails to provide satisfactory pacing to the patient. The maximum acceptable standard failure rate was determined to be 0.15% failures per month. This standard was compatible with the electronic capabilities of conventional pacemakers at the time. The radioisotope powered pacemaker was required to meet this reliability with a minimum 90% confidence.

For the 4 failures actually experienced with the radioisotope powered pacemaker, 5328 pacer months of observation is required to establish a 0.15% per month maximum failure rate with 90% confidence.

The NU-5 has actually logged a cumulative 6727 pacemaker months of implantation exceeding the minimum required by almost 1400 pacer months. Thus, ARCO's Model NU-5 pacemaker has demonstrated, with more than 90% confidence, that its average monthly failure rate of 0.059% is less than or equal to 0.15%. Further clinical investigation of NU-5 pacemakers, therefore, has been terminated.

VI. Statistical Analysis of Longevity

The statistical analysis in this report used follow-up data on 126 nuclear pacemakers and 80 control pacemakers. The data is summarized in Table 6.

The cumulative probability of survival for both the nuclear and control pacemakers is presented in Figures 3 and 4 respectively. The 95% lower confidence bounds for the cumulative survival probabilities were obtained using the methods outlined in Reference 2 and are also shown in Figures 3 and 4. The survival curves for the two types of pacemakers were compared using the Mantel-Haenszel chi-square with one degree of freedom.[1] The test resulted in a chi-square value of 60.1 ($p<0.001$) indicating the curves are significantly different. From the survival probability curves, it can be seen that while the nuclear pacemaker has achieved 96.5% reliability with a 95% confidence bound of 92% at seven years of clinical operation, the control pacemakers have only been able to maintain 12.3% reliability for the same period. This is attributed to the fact that 30 control pacers have failed, that is, have been removed due to mercury-zinc battery exhaustion.

As indicated above, four NU-5 pacemakers have failed out of the 126 implanted units. According to the statistical test for randomness provided by NRC[4] the failure rate of this pacemaker does not change with age. The probability to reject the hypothesis of constant failure rate, when it is in fact true, is 0.5705, therefore, the conclusion can be reasonably made that the failures are random.

VII. Patient Population Characteristics

A histogram of the age and sex distribution at the time of implant of the nuclear and chemical powered pacemaker patients is provided in Figures 5 and 6. When comparing Figures 5 and 6, it can be concluded that the nuclear patient is younger than the control patient. The average age of the nuclear patient is 47 years while that for the control patient is 62 years at implant. The proportion of males in the two groups is similar. Sixty-two percent (62%) of the nuclear patients were males, and sixty-five percent (65%) of the control patients were males.

VIII. Nuclear Pacemaker Accountability and Follow-up

All the nuclear pacemakers have been accounted for except where the patients have left the United States permanently. The righthand column of Table 2, the Nuclear Pacemakers Implanted, is entitled "Contact". If a "Yes" is printed in this column, this means the patient has been in contact with their clinic, has an identification card, and has an identification bracelet. If a "N/A" is printed in this column, it means the patient has left the United States permanently.

IX. Closeout

Liaison was conducted with the National Institutes of Health for the purpose of updating clinical evaluation of the nuclear pacemaker in humans as required by the Commission. Test data has been monitored and evaluated

on a continuing basis and semiannual status reports have been submitted to document this phase of the program.

Safety analyses and tests were conducted and the final Generic and Environmental Statement on routine use of Plutonium powered cardiac pacemakers was issued by the U.S. Nuclear Regulatory Commission, Office of Nuclear Safety and Safeguards in July, 1976. This completes ARCO Medical Products Company's participation in the clinical studies of the radioisotope powered cardiac pacemaker program.

BIBLIOGRAPHY

1. Mantel, Nathan and Haenszel, William. Statistical Aspects of the Analysis of Data from Retrospective Studies of Disease. Journal of the National Cancer Institute, Vol. 22, No. 4, April 1959.

2. Pacemaker Standard: Labeling Requirements, Performance Requirements, and Terminology for Implantable Artificial Cardiac Pacemakers. August 1975, FDA Contract No. 223-74-5083.

3. Research Protocol for Clinical Evaluation of the NU-5 Model Nuclear Pacemaker, March 25, 1974.

4. U.S. Nuclear Regulatory Commission, Generic Environmental Statement on Routine Use of Plutonium - Powered Cardiac Pacemakers, Final Vol., July, 1976.

APPENDIX A

SUMMARY OF EXPLANTED NUCLEAR & CONTROL PACEMAKERS

REMOVALS & FAILURES

Description of Reasons	No. of Nuclears	No. of Controls
REMOVALS		
Patient Death (Non-Pacer Related)	16	22
Wound Dehiscence	1	-
Infected Pocket	3	-
Competition	4	-
Lead Related Explant	4	-
Patient Requires Faster Rate Pacer	2	-
Pacer Erosion Reported	3	-
Pacer Reported not in Specification at Implant or after Implant, Unit Normal on Return	2	-
Muscle Stimulation	1	-
Elective Replacement - Non-Pacer Related, Pacer Normal	3	9
Loss of Capture, Non-Pacer Related	-	1
Pacer Explanted, Problem Reported Without Details - Pacer Not Returned	-	8
FAILURES		
Battery Depletion	-	14
Impending Pacemaker Wearout	-	16
Random Failure[1]	1	1
Electronics Failure[2]	2	-
Loss of Capture, Pacer Related[3]	1	-

[1] NU-5F #78 Explanted 3/18/76, Excessive internal moisture

[2] NU-5D #423 Explanted 7/11/75, Cracked case, loose wire in pacemaker
NU-5D #441 Explanted 2/7/75, No report available, rate increase

[3] NU-5D #500 Explanted 9/28/77, Feedthrough failure

APPENDIX B

REASONS FOR THE EXPLANT OF A PACEMAKER

01 Battery Depletion

02 Impending Pacemaker Wearout

03 Patient Death

04 Wound Dehiscence (Opening)

05 Infected Pocket (Pacemaker Bursa Infection)

06 Loss of Sensing Function, Pacer Not in Design Specifications

07 Competition

08 Electronics Failure

09 Lithium Battery Failure

10 Nuclear Battery Failure

11 Random Failure

12 Delaminated Capacitor

13 Lead Changed, Pacer Removed

14 Patient Requires Faster Rate Pacer

15 Loss of Sensing, Patient or Lead Related, Pacer Normal on Return or Reimplanted

16 Electronics Damaged During Defibrillation

17 Pacemaker Erosion Reported

18 Pacer Reported Not in Spec. at Implant, or After Implant, Unit Normal on Return

19 Loss of Capture, Non-Pacer Related

20 Feedthrough Failure (Advisory Group)

21 Pacemaker Rate Change, Pacer Out of Specification

22 Pacer Explanted, Problem Reported Without Details, Pacer Not Returned

23 Lead Could Not Be Removed From Pacer

24 Muscle Stimulation

25 Elective Replacement, Not Pacer Related, Pacer Normal

26 Lead Could Not Be Inserted Into Pacer, or Set Screw Could Not Be Tightened

27 Pacer Rate Increase/Decrease Reported, Pacer Normal Upon Return

28 Pacer Rate Change, Pacer in Specification

29 Loss of Capture, Non-Pacer Related (Plug Missing, Fluid in Terminal)

30 Pacer Returned Because of Cracked Epoxy

31 Automatic Rate Equals Magnetic Rate, Physiological Reasons

32 Non-Pacer Related Oversensing

33 Set Screw Head Stripped

34 Pacer in Spec., Explanted Due to Apparent Pacer Inhibition

35 Automatic Rate Equals Magnetic Rate, Electronic Failure

36 Pacer Returned Without details; Pacer in Specification

37 Pulse Width Variation due to Psuedo-fusion; Pacer in Specification

38 Advisory Return, Pacer in Electrical Spec. Upon Return

39 Loss of Capture, Pacer Related

40 Advisory Unit Not in Specification Upon Return, Non-Feedthrough Related; Pacemaker Still Functioning.

41 Connection Problem

42 EMI Filter Capacitor Shunt; Results in Low Output Amplitude

HUMAN IMPLANT MODEL NU-5 RADIOISOTOPE POWERED CARDIAC PACEMAKER

FIGURE 1

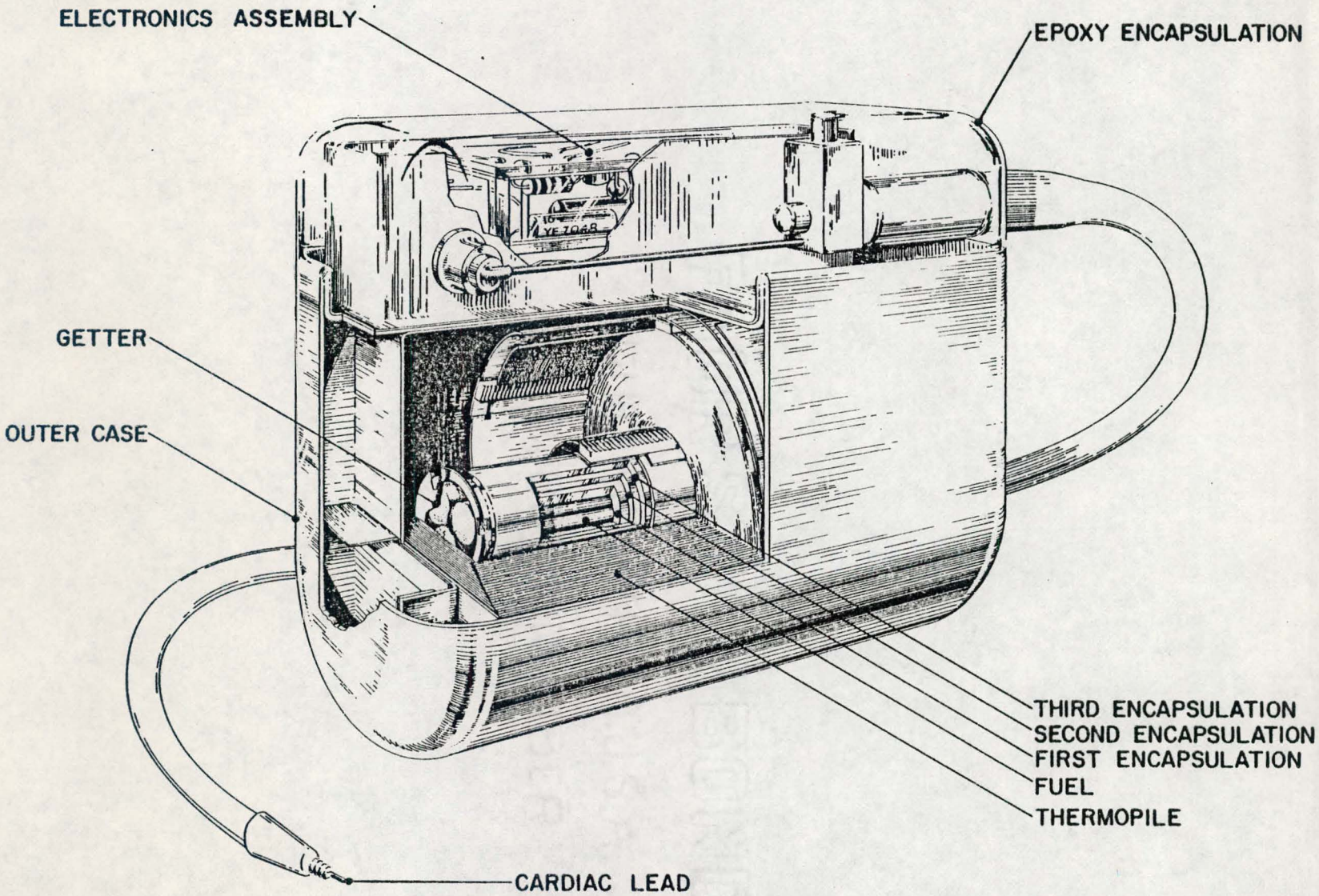

RADIOISOTOPE POWERED CARDIAC PACEMAKER NU-5

FIGURE 2

ESTIMATED SURVIVAL DISTRIBUTION AND LOWER 95 PERCENT CONFIDENCE BOUND FOR NUCLEAR PACEMAKERS

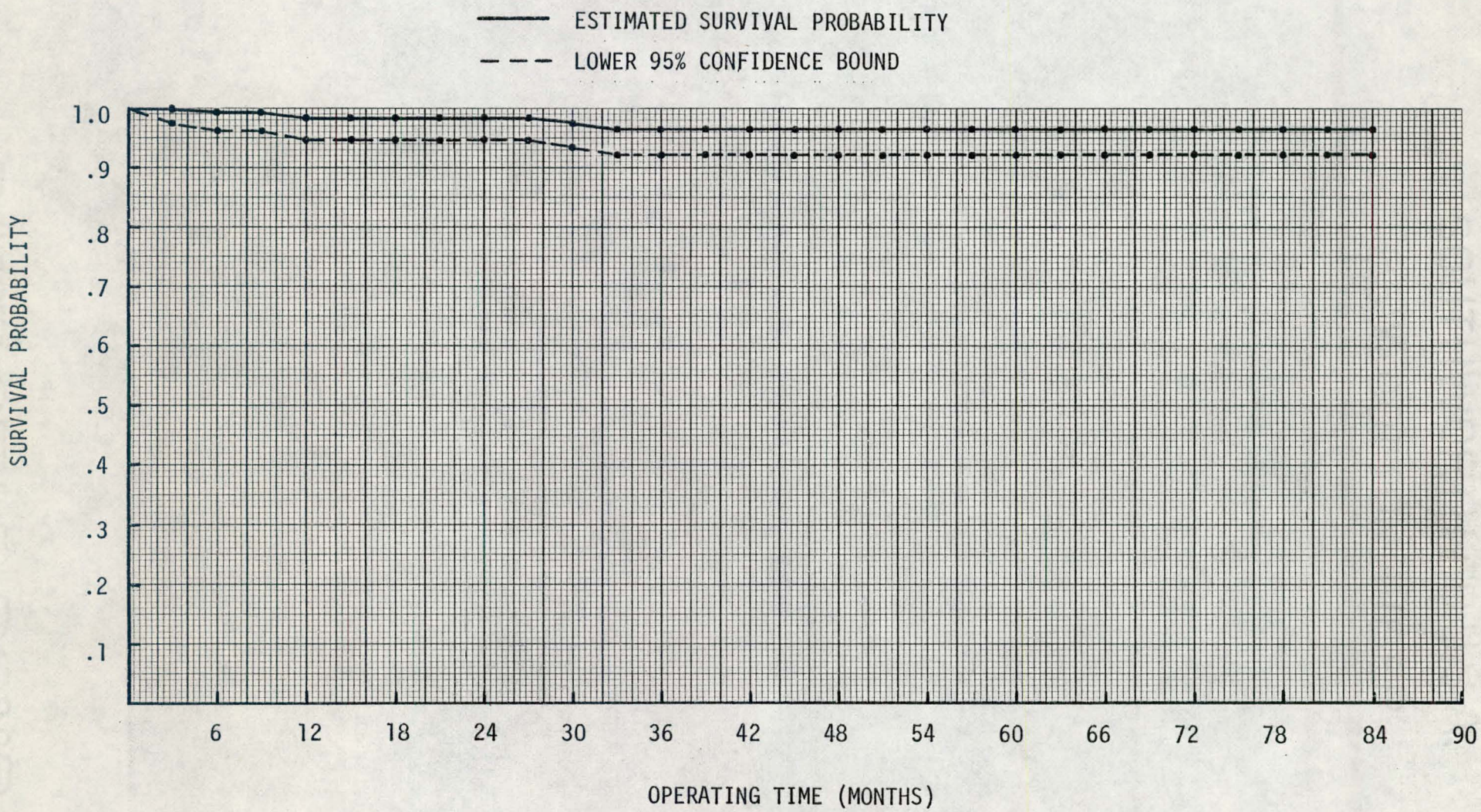

FIGURE 3

5-28-80

ESTIMATED SURVIVAL DISTRIBUTION AND LOWER 95 PERCENT CONFIDENCE BOUND FOR CONTROL PACEMAKERS

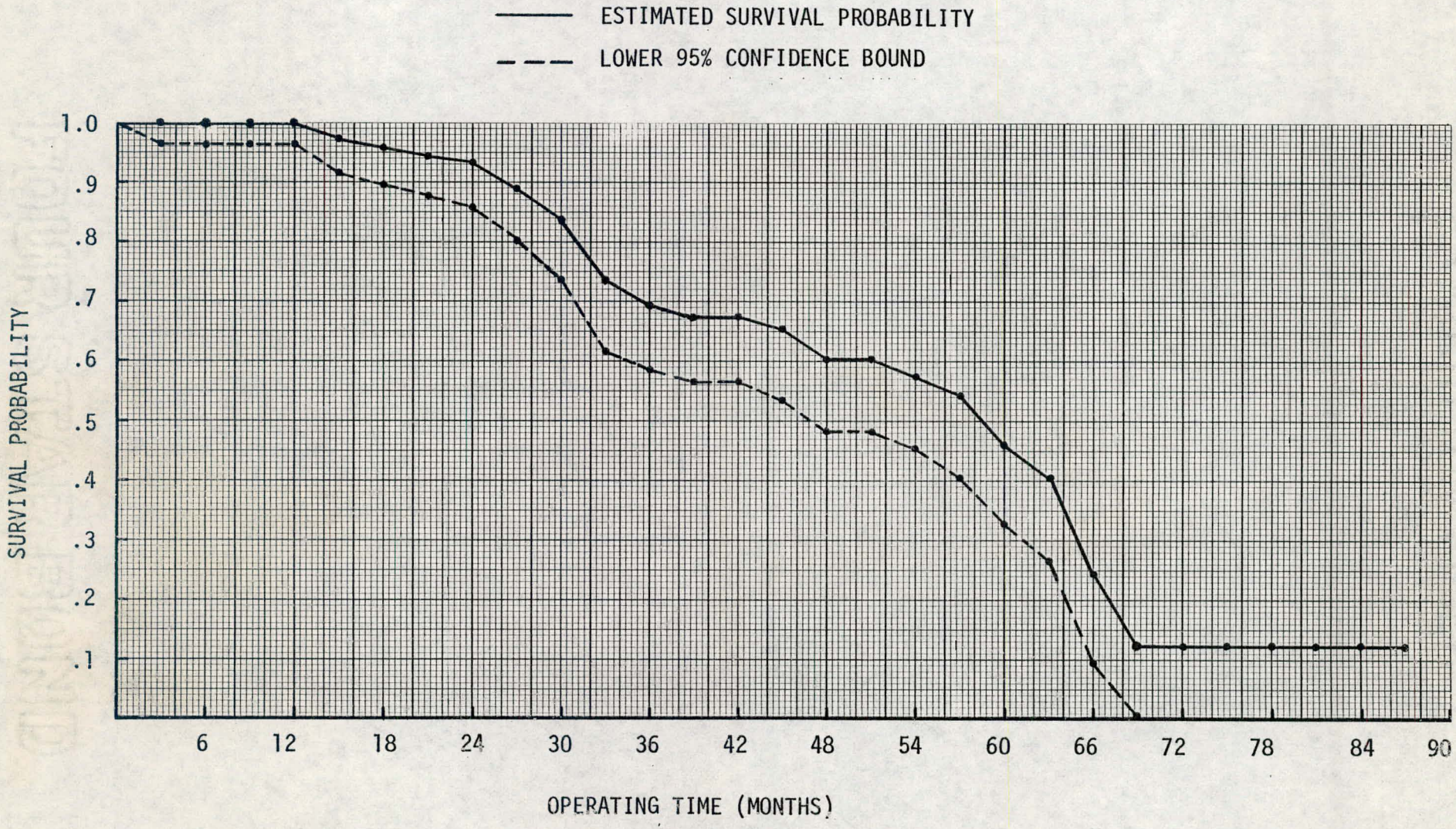

FIGURE 4

5-28-80

FIGURE 5

NUCLEAR PACEMAKER POPULATION

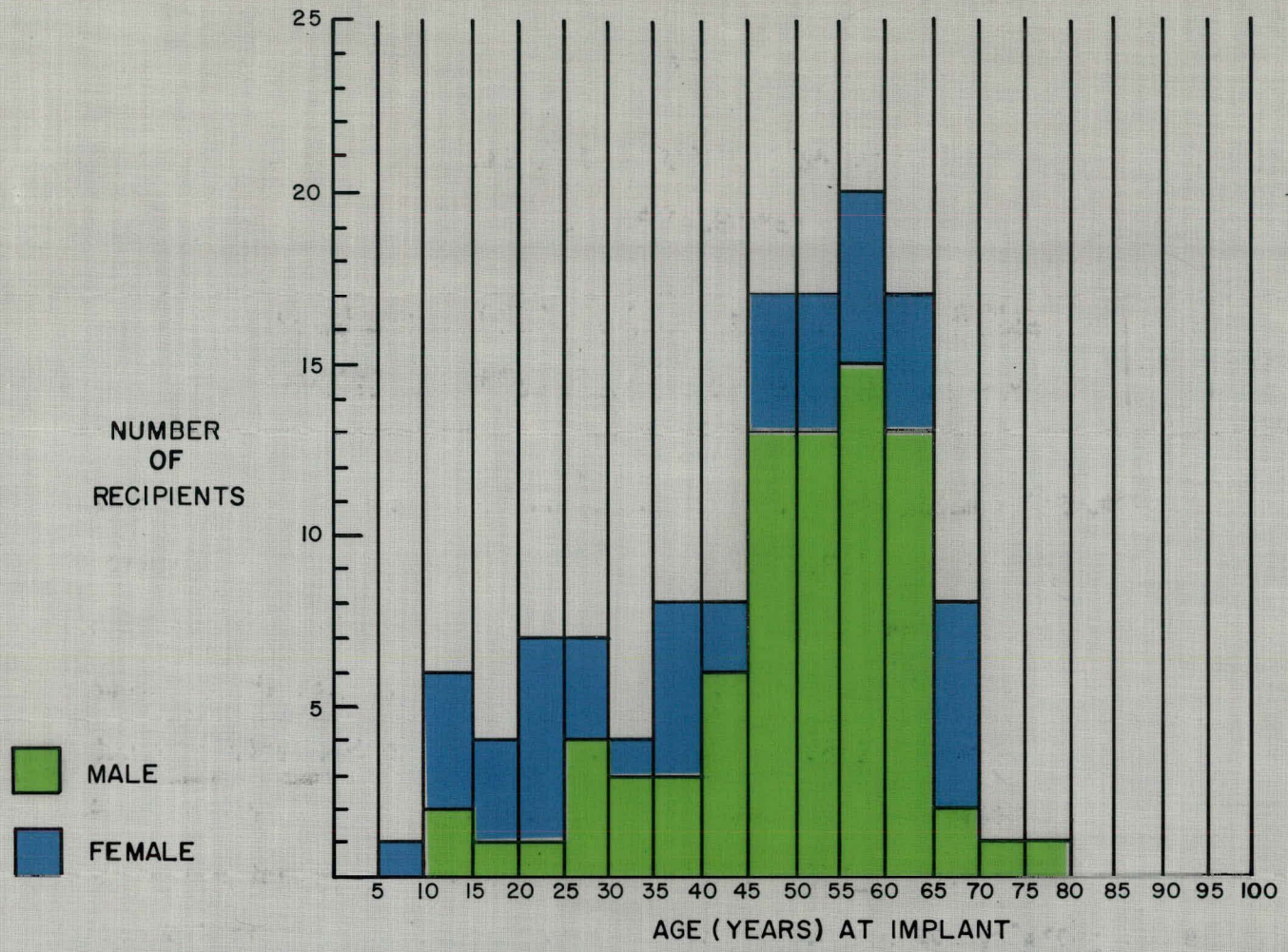

FIGURE 6

CONTROL PACEMAKER POPULATION

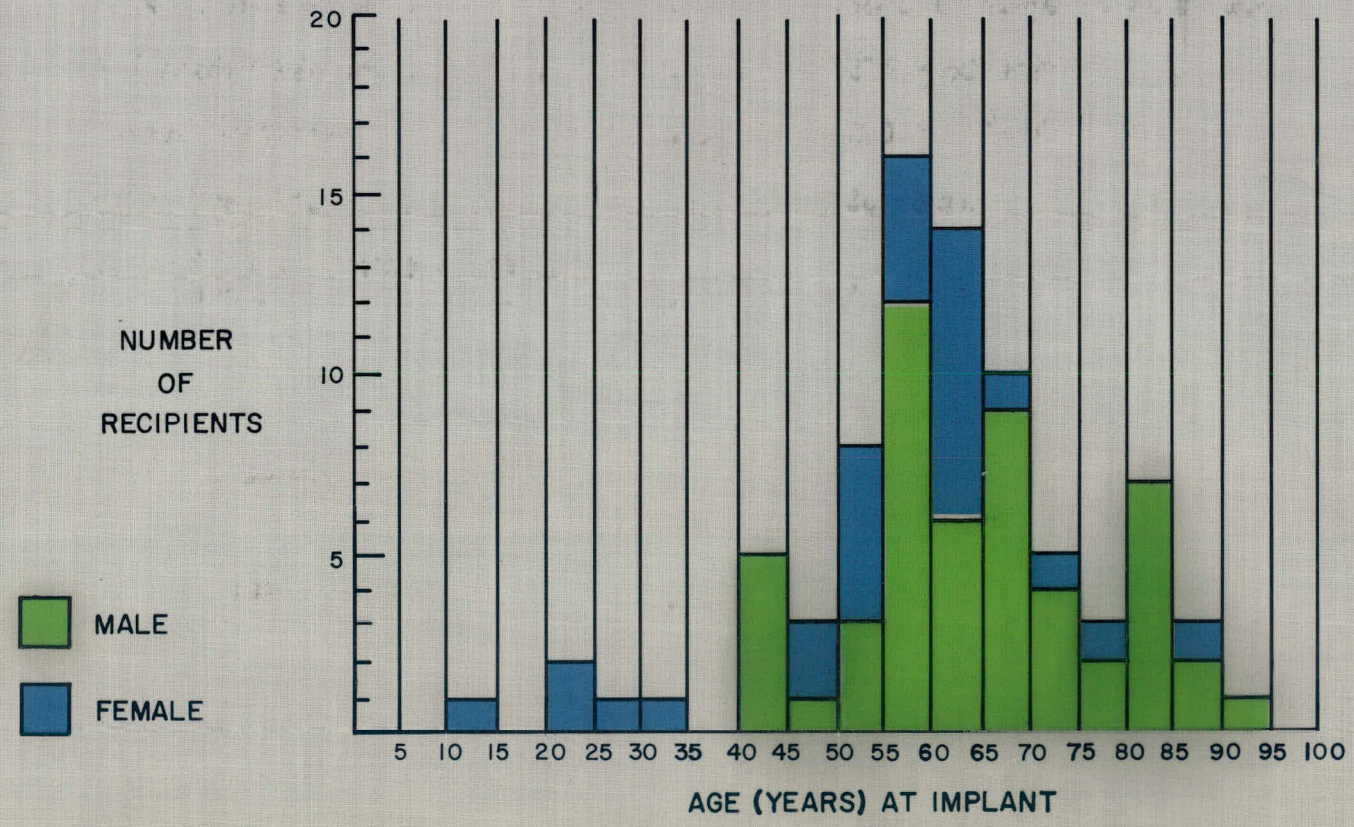

TABLE I

ARCO MEDICAL PRODUCTS COMPANY

MODEL NU-5 PACEMAKER

CHARACTERISTICS AND NOMINAL DESIGN SPECIFICATIONS

AT BODY TEMPERATURE (37° C) ACROSS 500 OHM LOAD

Size	6 cm x 5 cm x 3.2 cm
Volume	80.4 cc
Weight	120 grams
Specific Gravity	1.5
Current Pulse Amplitude	8.0 ± 2.0 ma
Pulse Width	0.9 ± .1 msec
Automatic Rate	72 ± 4 ppm
Escape Rate	Basic Pacing Rate ± 2 ppm
Magnetic Test Rate	9 ± 5 Above Basic Pacing Rate
Interference Rate	Same as Magnetic Test Rate
Refractory Period	275 ± 60 msec
R-Wave Sensitivity	2.0 ± 1.0 mv
Life Expectancy	30 years
Open Circuit Voltage Pulse Amplitude	4.2 volts

TAB II

CO Medical Products Company
Subsidiary of Atlantic Richfield Company
P.O. BOX 546/LEECHBURG, PA. 15656, U.S.A.
PHONE (412) 845-8111/TWX-510-467-8603

NRC REPORT 77

DATE APRIL 15, 1980

NUCLEAR PACEMAKERS IMPLANTED

PACEMAKER			IMPLANT DATA					PATIENT		LEAD DATA					FOLLOW-UP DATA				
MODEL	SERIAL	MFG DATE	IMP DATE	HOSPITAL	DOCTOR	AUTO RATE	MAGN RATE	AGE	SEX	MODEL	TYPE	MODE	MFGR	IMP DATE	FOLLOW-UP DATE	AUTO RATE	MAGN RATE	DAYS IMPLT	CON-TACT
NU-5F	70	11- 9-72	4-10-73	3300601	33001	71.0		68	M	322	E	U	6	12-17-79	2- 7-80	73.4		2560	YES
NU-5F	74	11-13-72	5-12-73	4700201	47001	74.3		31	F	322	E	U	6	8-30-65	2-18-80	.	76.0	2528	YES
NU-5F	80	11-15-72	2-19-74	3300601	33001	73.5		62	M	322	E	U	6	1-15-72	2-26-80	73.9		2246	YES
NU-5F	83	11-20-72	4-10-73	3300601	33001	73.0		50	M	322	E	U	6	2-20-70	2- 4-80	71.7		2560	YES
NU-5F	85	11-20-72	4- 9-73	3300601	33001	73.0		68	M	322	E	U	6	4- 9-73	2- 8-80	71.0		2561	YES
NU-5F	86	11-20-72	4-10-73	3300601	33001	73.0		66	M	322	E	U	6	4-10-73	2- 4-80	75.2		2560	YES
NU-5F	90	11-22-72	4-10-73	3300601	33001	74.0		27	F	322	E	U	6	4-10-73	2- 4-80	74.4		2560	YES
NU-5F	94	12- 5-72	6- 5-73	1100101	11001	75.1		29	F	6901	E	U	13	7-22-71	2-11-80	.	80.0	2505	YES
NU-5F	97	12- 6-72	6- 5-73	1100101	11001	73.0		16	F	5815	M	U	13	6- 5-73	6-15-78	.	.	2505	YES
NU-5F	100	12-13-72	4- 9-73	3300601	33001	73.0		63	F	322	E	U	6	5-31-67	2- 1-80	72.0		2561	YES
NU-5F	103	12-13-72	4- 9-73	3300601	33001	73.0		61	M	322	E	U	6	4- 9-73	2- 4-80	72.3		2561	YES
NU-5F	107	12-18-72	4-10-73	3300601	33001	74.0		63	F	322	E	U	6	4-10-73	2- 1-80	67.7	.	2560	YES
NU-5F	115	12-28-72	7- 6-73	3500101	35001	72.7		63	M	322	E	U	6	5- 8-68	3-20-80	67.3		2474	YES
NU-5F	120	1- 5-73	7-24-73	1000101	58006	75.0		73	F	322	E	U	6	6-15-70	10- 1-76			2456	NO
NU-5F	126	1-19-73	6-12-73	1000101	10001	74.0		46	F	322	E	U	6	1-23-70	9-12-79	73.3	.	2498	YES
NU-5F	128	1-19-73	6-12-73	1000101	10001	75.0		70	F	322261	E	U	6	1-15-68	1-16-80	75.1	.	2498	YES
NU-5F	129	1-24-73	6-13-73	4100602	41001	74.0		63	M	322256	E	U	6	6-13-73	1- 4-80	75.0	.	2497	YES
NU-5F	131	1-24-73	6-13-73	4100602	41001	75.0		64	M	6905	E	U	13	6-16-71	10- 9-79	75.0	.	2497	YES
NU-5F	138	2-10-73	12-10-73	2300101	23001			21	F	EMT588	E	U	7	12-10-73	3-24-80	76.7		2320	YES
NU-5F	140	2-14-73	6-13-73	4100602	41001	74.0		55	F	335	M	U	6	11-20-70	12-17-79	75.0		2497	YES
NU-5F	144	2-16-73	7-27-73	3500101	35001	73.4		53	M	322	E	U	6	5-16-69	9-12-79	74.8	.	2453	YES
NU-5F	145	2-16-73	9-14-73	3500101	35001	73.5		79	M	322	E	U	6	2-27-70	3- 7-80	73.4		2406	YES
NU-5F	149	2-23-73	8- 7-73	3500101	35001	73.3		71	M	322	E	U	6	6-26-69	10-24-79	74.7		2443	YES
NU-5F	155	3-30-73	12- 3-73	1100101	11001	75.0		49	M	5815	M	U	13	1-15-72	2-26-80	75.0		2327	YES

ARCC-1268

TABLE II (cont.)

ARCO Medical Products Company
Subsidiary of Atlantic Richfield Company
P.O. BOX 546/LEECHBURG, PA. 15656, U.S.A.
PHONE (412) 845-8111/TWX-510-467-8603

NRC REPORT

DATE APRIL 15, 1980

NUCLEAR PACEMAKERS IMPLANTED

PACEMAKER			IMPLANT DATA					PATIENT		LEAD DATA					FOLLOW-UP DATA				
MODEL	SERIAL	MFG DATE	IMP DATE	HOSPITAL	DOCTOR	AUTO RATE	MAGN RATE	AGE	SEX	MODEL	TYPE	MODE	MFGR	IMP DATE	FOLLOW-UP DATE	AUTO RATE	MAGN RATE	DAYS IMPLT	CON-TACT
NU-5F	157	3-30-73	11-23-73	3500201	35002	76.0		62	M	PED.	E	U	13	10-15-71	9-26-79	75.9		2337	YES
NU-5F	175	11-16-72	5-14-74	3500101	35001	74.5		49	F	1E60K	E	U	3	12-15-72	3-20-80	76.4		2161	YES
NU-5F	318	9-14-73	5-28-74	3300601	33001	73.0		30	M	6901	E	B	13	6-15-72	2-27-80	74.6		2147	YES
NU-5F	341	9-26-73	9- 9-74	3500101	35001	71.2		51	M	1E60K	E	U	3	6-15-71	3-31-80	74.6		2046	YES
NU-5F	342	9-26-73	10- 8-74	3300601	33001	73.0		82	M	322	E	U	6	2-27-68	2-11-80	75.3		2017	YES
NU-5F	361	11-21-73	10-29-74	2100201	21001	72.0		68	F	5814	M	B	13	8-13-64	3-21-80	72.0		1996	YES
NU-5F	362	11-21-73	10-25-74	3500101	35001	73.6		73	F	322	E	U	6	1-26-66	3-26-80	73.8		2000	YES
NU-5F	363	2- 5-75	10-10-75	1100503	11020	74.0		18	M	322256	E	U	6	8- 3-73	4- 5-79	74.3	.	1650	YES
NU-5D	408	2-13-74	7- 5-74	4100602	41001	65.0	90.0	55	F	322	E	U	6	7- 5-74	9- 4-79	84.0	.	2110	YES
NU-5D	459	6-27-74	11-18-75	3500101	35001	72.1	80.0	60	F	322	E	U	6	7-26-72	3-21-80	74.4	81.9	1612	YES
NU-5D	460	6-27-74	2- 6-75	3500101	35001	72.0		60	F	322	E	U	6	7-26-66	3- 7-80	74.0	79.9	1894	YES
NU-5D	462	7-12-74	3- 3-75	3500101	35001	71.8	78.7	33	F	323	M	U	6	7- 3-68	2- 1-80	74.6	81.4	1867	YES
NU-5D	465	7-12-74	3-24-75	3500301	35002	70.0		55	M	6913	E		13	3-24-75	2- 5-80			1846	YES
NU-5D	467	11-15-74	6- 4-75	3500101	35001	71.2	78.9	65	M	322	E	U	6	6- 4-75	3-21-80		80.5	1776	YES
NU-5D	474	7-26-74	1-27-75	3500301	35002	71.0		57	M		E		13	12-12-72	1-15-80			1903	YES
NU-5D	476	8- 2-74	1-27-75	2100201	21008		76.6	63	M				0	5-26-75	2-28-80	71.0		1903	YES
NU-5D	477	8- 2-74	5-16-75	3300601	33001		76.6	67	M	322	E	U	6	7-24-73	1-24-80	70.6	72.1	1794	YES
NU-5D	479	8- 9-74	1-27-75	3300601	33001	67.1		75	M	1E60K	E	U	3	5-18-71	2- 6-80	72.1	78.3	1903	YES
NU-5D	481	8- 9-74	10- 1-76	4700303	47006	70.0	77.0	52	M	691753	E	U	13	10- 1-76	10-11-79	.	.	1294	YES
NU-5D	483	8-13-74	3- 4-75	3300601	33001	65.6	72.6	30	F	322	E	U	6	3- 4-75	2-22-80		82.0	1866	YES
NU-5D	490	8-16-74	3- 5-75	4700201	47001	76.5	86.5	56	F	322	E	U	6	3- 5-75	2-18-80	.	76.0	1865	YES
NU-5D	492	8-16-74	1-17-75	4700602	47001	66.6		45	F	322620			6	9-17-77	2-18-80	72.6	.	1913	YES
NU-5D	496	8-21-74	2- 7-75	700101	7001	67.0	76.0	30	F		E	B	13	7-15-72	10- 2-79	74.8	84.6	1893	YES
NU-5D	498	8-21-74	4-15-75	3300601	33001	66.6		63	M	2743	E	U	16	10-23-72	2-22-80	72.7	79.9	1825	YES

ARCC-1268

TABLE I' 'cont.)

ARCO Medical Products Company
Subsidiary of Atlantic Richfield Company
P.O. BOX 546/LEECHBURG, PA. 15656, U.S.A.
PHONE (412) 845-8111/TWX-510-467-8603

NRC REPORT

DATE APRIL 15, 1980

NUCLEAR PACEMAKERS IMPLANTED

PACEMAKER			IMPLANT DATA					PATIENT		LEAD DATA					FOLLOW-UP DATA				
MODEL	SERIAL	MFG DATE	IMP DATE	HOSPITAL	DOCTOR	AUTO RATE	MAGN RATE	AGE	SEX	MODEL	TYPE	MODE	MFGR	IMP DATE	FOLLOWUP DATE	AUTO RATE	MAGN RATE	DAYS IMPLT	CON-TACT
NU-5D	499	8-21-74	9-13-76	1200103	12008	68.0	75.0	58	M	322	E	U	6	2-23-73	1-28-80	73.7	82.5	1312	YES
NU-5D	501	11-19-76	4-17-78	2100301	21017	68.0	75.0	52	M				6	0- 0- 0	2-11-80	75.0	86.0	728	YES
NU-5D	504	9- 6-75	4-20-77	2100301	21017		76.0	50	F	2HP	E	U	1	4-20-77	1-17-80	75.1	.	1090	YES
NU-5D	506	9- 6-74	5-19-75	3300601	33010	76.1		60	F	2HP	E	U	1	5-19-75	2-20-80		82.2	1791	YES
NU-5D	508	9-11-74	3-14-75	3300601	33001		82.0	57	M	6907	E	U	13	7- 1-74	2- 1-80	71.3	81.6	1856	YES
NU-5D	509	9-11-74	4- 4-75	2400101	24001			70	M	6917	M	B	13	4- 4-75	2- 6-80	.	.	1836	YES
NU-5D	513	9-19-74	3-18-75	3800401	38001	69.0		54	M	322	E	U	6	0- 0- 0	11-12-79	71.2	81.1	1852	YES
NU-5D	515	9-19-74	7-16-75	3300601	33010		76.8	72	M	322	E	U	6	3-15-71	2-12-80	72.3	82.3	1734	YES
NU-5D	519	9-24-74	5-22-75	3300601	33001	69.2		65	M	L10	E	U	5	5-22-75	2-12-80	69.1	74.6	1768	YES
NU-5D	523	9-26-74	11-13-76	1100506	11082	68.0	75.0	35	M	691753	M	U	13	11-13-76	11- 5-79			1252	YES
NU-5D	524	10- 4-74	2-12-76	3500101	35001	71.8	79.4	72	F	322	E	U	6	10- 9-68	3- 6-80	72.9	79.6	1523	YES
NU-5D	525	10- 4-74	5-30-75	3300701	33004	72.0		55	F	691735	E	B	13	5-30-75	1-19-80	69.3		1780	YES
NU-5D	527	10- 4-74	5-14-75	3800401	38001			31	M	322	E	U	6	5-14-75	1-30-80	.	75.1	1796	YES
NU-5D	528	10-10-75	6-17-76	800401	8004	67.0	71.5	59	M	2HP	E	U	1	6-17-76	1-10-80	.	.	1398	YES
NU-5D	529	1-28-75	3-13-76	1900103	19026			50	M	691753	M	U	13	3-13-76	11-13-79	72.0		1492	YES
NU-5D	532	1-29-75	3- 8-76	4100604	41012	69.0	77.0	34	M	202600	E	U	1	3- 8-76	2-13-79	.	.	1497	YES
NU-5D	535	10-15-74	8-29-75	3300601	33001	70.5		66	M		E	U	13	8-29-75	12-20-79	70.8		1691	YES
NU-5D	537	10-18-75	8- 4-76	1900103	19009	74.0		55	M	691753	M		13	8- 4-76	12-12-79	73.0		1351	YES
NU-5D	539	2-25-75	10-28-75	1100506	11005	71.2		36	F	691753	M	U	13	10-28-75	7- 9-79	70.5	75.5	1632	YES
NU-5D	542	1-30-75	12- 2-75	1200103	12008		78.0	43	M	322	E	U	6	8-15-73	2- 4-80	80.0	82.8	1598	YES
NU-5D	544	11- 1-74	12- 9-75	3300601	33010		75.8	64	M	322	E	U	6	12- 9-75	2-26-80	70.4	76.8	1591	YES
NU-5D	545	11- 1-74	2- 5-75	3300601	33001	69.3	79.4	41	F	5814	E	U	13	12- 5-75	2- 6-80	72.0	78.4	1895	YES
NU-5D	549	2-25-75	11-15-75	1900102	19002	73.0	77.0	29	F	202600	E	U	1	11-15-75	9-18-78	73.0	78.0	1615	YES
NU-5D	562	12-31-74	11-19-76	1200103	12002	68.0		49	M	2HP	E	U	1	11-19-76	6- 5-79	.	.	1246	YES

ARCC-1268

TABLE II (cont.)

ARCO Medical Products Company
Subsidiary of Atlantic Richfield Company
P.O. BOX 546/LEECHBURG, PA. 15656, U.S.A.
PHONE (412) 845-8111/TWX-510-467-8603

NRC REPORT

DATE APRIL 15, 1980

NUCLEAR PACEMAKERS IMPLANTED

PACEMAKER			IMPLANT DATA					PATIENT		LEAD DATA					FOLLOW-UP DATA				
MODEL	SERIAL	MFG DATE	IMP DATE	HOSPITAL	DOCTOR	AUTO RATE	MAGN RATE	AGE	SEX	MODEL	TYPE	MODE	MFGR	IMP DATE	FOLLOWUP DATE	AUTO RATE	MAGN RATE	DAYS IMPLT	CON-TACT
NU-50	571	1-28-75	8-29-75	1600301	16012	66.0	72.0	68	F	691735	E	B	13	8-29-75	5- 4-79	70.0	75.0	1691	YES
NU-50	572	1-28-75	10- 8-75	3300601	33001	68.8		74	F				6	10-14-71	3- 7-80		77.0	1652	YES
NU-50	581	4- 3-75	2-17-76	1900103	19009	73.4	78.0	38	M		E	U	6	6-15-72	3- 4-80	72.0		1518	YES
NU-50	583	3-24-75	3- 4-76	4100604	41012	66.0	73.0	56	M	690758	E	U	13	3- 4-76	2-21-80	.	79.2	1501	YES
NU-50	586	2-14-75	1-23-76	500201	5002	72.0	78.0	54	M		E	U	1	1-23-76	1-21-80	72.0	80.0	1542	YES
NU-50	587	2-20-75	6- 3-76	1900102	19001			55	F	691735	M	U	13	6- 3-76	3- 7-80	71.4		1412	YES
NU-50	592	2-27-75	8- 4-76	2400101	24003			54	M		E	U	6	8- 4-76	3-21-80	73.5	82.0	1351	YES
NU-50	607	4-24-75	12- 5-75	1900102	19001	65.1	68.7	36	M	322	M	B	6	0- 0- 0	12- 6-79	66.5	73.6	1595	YES
NU-50	611	3-26-75	7- 7-76	1900102	19019	66.0	73.0	44	F	691753	M	U	13	7- 7-76	11-27-79	72.7	80.8	1378	YES
NU-50	623	4-22-76	7-28-76	2100301	21017			49	M		E	B	13	7-28-76	1- 7-80	71.0	78.1	1357	YES
NU-50	624	4-22-76	5-26-76	2400401	24006	72.7		45	M	2HP	E	U	1	5-26-76	3-11-80	71.3	78.7	1419	YES

TAB III

ARCO Medical Products Company
Subsidiary of Atlantic Richfield Company
P.O. BOX 546/LEECHBURG, PA. 15656, U.S.A.
PHONE (412) 845-8111/TWX-510-467-8603

NRC REPORT

DATE APRIL 15, 1980

NUCLEAR PACEMAKERS EXPLANTED

PACEMAKER			IMPLANT DATA					PATIENT		LEAD DATA					EXPLANT DATA				
MODEL	SERIAL	MFG DATE	IMP DATE	HOSPITAL	DOCTOR	AUTO RATE	MAGN RATE	AGE	SEX	MODEL	TYPE	MODE	MFGR	IMP DATE	EXPLANT DATE	AUTO RATE	MAGN RATE	DAYS IMPLT	REASON
NU-5F	61	9-12-72	4-10-73	3300601	33001	72.0		69	F	322	E	U	6	10-14-71	10- 1-75			908	05
NU-5F	72	11- 9-72	4-10-73	3300101	33001	72.0		54	M	322	E	U	6	4-10-73	9- 8-76			1243	03
NU-5F	73	11- 9-72	5- 7-73	4700201	47001	73.2		67	M	5814	E	B	13	4-14-70	7-14-78			1892	24
NU-5F	75	11-13-72	12- 4-73	3500301	35002	72.0		63	M	5814	E	B	13	9-15-70	5-29-79			2005	16
NU-5F	76	11-13-72	4- 9-73	3300601	33001	72.0		66	M	322	E	U	6	2- 9-72	4-15-75			736	14
NU-5F	78	11-15-72	10-11-73	500101	5001	72.0		66	M	5814	M	B	13	8-10-64	3-18-76	69.1		892	11
NU-5F	82	11-15-72	2- 6-74	3500201	35002	70.0		58	A	322	E	U	6	2-15-67	3-19-75	72.5		408	13
NU-5F	88	11-22-72	4- 9-73	2300101	23001	73.0		45	F	5914	M	B	13	2-15-64	8-11-79	.	.	2312	03
NU-5F	95	12- 5-72	5-18-73	500101	5001	74.4		61	M	322	E	U	6	5-18-73	11- 9-76			1266	17
NU-5F	99	12- 6-72	8- 3-73	1100101	11001	72.0		13	M	322256	E	U	6	8- 3-73	10-10-75			797	13
NU-5F	101	12-13-72	4- 9-73	3300601	33001	72.0		22	F	322	E	U	6	4- 9-73	8-14-78			1950	07
NU-5F	102	12-13-72	4- 9-73	3300601	33001	73.0		69	M	322	E	U	6	5- 7-68	3- 9-79	.	.	2160	07
NU-5F	106	12-18-72	4- 9-73	3300601	33001	74.0		15	F	6901	E	B	13	5-15-70	8-27-76			1233	14
NU-5F	108	12-20-72	4- 9-73	3300601	33001	73.0		65	M	322	E	U	6	0- 0- 0	4-16-77			1467	03
NU-5F	109	12-20-72	6-25-73	2300101	23001	73.0		15	F		E	U	7	6-25-73	11-15-73	70.5		140	05
NU-5F	113	12-22-72	6- 5-73	500101	5001	72.9		64	M	5814	M	B	13	8-10-64	10-12-73	70.2		127	04
NU-5F	114	12-22-72	7- 6-73	500101	5001	72.0		29	M	6917	E	B	13	7- 6-73	5- 5-76	64.9		1034	03
NU-5F	116	12-28-72	7-20-73	500107	5001	70.9		70	F	322	E	U	6	7-20-73	11-13-78			1938	25
NU-5F	121	1- 5-73	6-13-73	1000101	10001	75.0		64	F	322	E	U	6	10-27-70	1- 5-77			1302	03
NU-5F	125	1-12-73	6-13-73	1000101	10001	75.0		73	F	322	E	U	6	1-28-72	8-25-78			1897	03
NU-5F	136	2-10-73	9-12-73	3500101	35001	74.3		63	M	322	E	U	6	7-14-70	7-19-76			1042	03
NU-5F	139	2-10-73	11- 5-73	2300101	23001	74.0		28	F	5816	E	B	13	3-13-67	11- 5-76			730	07
NU-5F	142	2-11-73	6-15-73	4100602	41001	74.0		56	M	691753	M	U	13	10-12-77	11-26-79			2351	05
NU-5F	156	3-30-73	9-15-73	3500201	35002	75.0		55	M	6901	E	B	13	3-15-73	12-26-77			1557	03

ARCC-1268

TABLE I'' 'cont.)

ARCO Medical Products Company
Subsidiary of Atlantic Richfield Company
P.O. BOX 546/LEECHBURG, PA. 15656, U.S.A.
PHONE (412) 845-8111/TWX-510-467-8603

NRC REPORT

DATE APRIL 15, 1980

NUCLEAR PACEMAKERS EXPLANTED

PACEMAKER			IMPLANT DATA					PATIENT		LEAD DATA					EXPLANT DATA				
MODEL	SERIAL	MFG DATE	IMP DATE	HOSPITAL	DOCTOR	AUTO RATE	MAGN RATE	AGE	SEX	MODEL	TYPE	MODE	MFGR	IMP DATE	EXPLANT DATE	AUTO RATE	MAGN RATE	DAYS IMPLT	REASON
NU-5F	150	3-30-73	8- 4-75	2300101	23001	75.0		20	M	5816	E	U	13	7-14-70	3-25-76	76.6		236	17
NU-5F	162	4- 6-73	11-29-73	3500301	35002	74.0		44	M	5814	E	B	13	6-15-70	10-11-75			682	13
NU-5F	313	9-14-73	5-31-74	3300601	33001	73.1		29	M	323	M	U	6	5-31-74	6- 4-74	72.3		3	07
NU-50	423	4-19-74	9-13-74	3500201	35002	72.0	72.0	44	M		M	B	13	0- 0- 0	7-11-75	93.7	110.7	303	12
NU-50	435	5- 2-74	1-17-75	3500301	35002	70.0		54	M		E	B	13	1-15-73	8-24-77			947	13
NU-50	441	5-23-74	8-26-74	700101	7001	72.0	78.0	25	F		E	B	13	7-15-72	2- 7-75	92.2	107.7	166	12
NU-50	466	7-12-74	2-25-75	2100202	21002	70.0		59	M	6901	E	B	13	2-25-75	7-13-77			868	03
NU-50	480	8- 9-74	3-28-75	3300601	33001	67.9	76.2	58	F	322	E	U	6	10-14-68	1-11-76			288	03
NU-50	485	8-13-74	2-10-75	800201	8001	71.6	79.1	50	M	0678	E	U	6	1-16-70	9- 2-75	73.4	80.7	202	03
NU-50	500	8-29-74	1-16-75	2100202	21002	73.0		56	M	6901	E	B	13	1-16-75	9-28-77			982	39
NU-50	520	9-26-74	7-25-75	3300601	33001	72.6	79.7	3[illegible]	F	322	E	U	6	12-11-70	11-15-76	74.3	81.1	475	03
NU-50	534	1-29-75	12- 2-75	1600104	16014			17	F	323	M	U	6	7-15-71	11-15-79			1443	17
NU-50	547	2-25-75	10-10-75	3300601	33001	69.5	73.9	39	M	322	E	U	6	7-21-72	12- 5-75	69.7	75.6	35	03
NU-50	570	1-28-75	8- 7-75	800201	8001	69.2	76.8	41	M	322452	E	U	6	8- 7-75	8- 7-78			1095	03
NU-50	578	2-12-76	4- 9-76	1700101	17001			51	M	2HP	E	U	1	4- 9-76	9-22-79	.	.	1258	03
NU-50	584	4- 3-75	11- 4-76	3300601	33038		69.5	44	F	322	E	U	6	11- 4-76	11-22-76			18	25
NU-50	603	3-11-75	1- 5-76	1100502	11012			28	F	323	M	U	6	0- 0- 0	7-23-78			928	03
NU-50	606	4-24-75	12-29-75	3500301	35002	73.0		46	M	EV3005			18	12-29-75	4- 9-79			1200	25
NU-50	627	4-29-76	8-31-76	1900102	19005			62	M	690158	E	B	13	5-17-74	11-15-79			1169	16

ARCC-1268

TABLE IV

ICO Medical Products Company
Subsidiary of Atlantic Richfield Company
P.O. BOX 546/LEECHBURG, PA. 15656, U.S.A.
PHONE (412) 845-8111/TWX-510-467-8603

NRC REPORT

DATE APRIL 15, 1980

CONTROL PACEMAKERS IMPLANTED

PACEMAKER ID	MODEL NO	FIXED OR DEMAND	MFGR	IMPLANT DATA: IMP DATE	HOSPITAL	AUTO RATE	MAGN RATE	PATIENT: AGE	SEX	LEAD DATA: MODEL	TYPE	MODE	MFGR	IMP DATE	FOLLOW-UP DATA: FOLLOW-UP DATE	AUTO RATE	MAGN RATE	DAYS IMPLT	CON-TACT
L-I 12	6301	F	4	2- 1-73	3300601	70.2		71	M	322	E	U	6	10-16-67	1-24-80	73.3		2625	YES
L-L 39	30100	D	4	12-23-74	3500101	73.8	90.2	47	M	690758	E	U	13	12-23-74	4-10-79			1942	YES
62	30100	D	4	11-22-74	3300601			74	M	5014	M	B	13	11-22-74	1-23-80		91.6	1573	YES
67	120	D	10	7- 8-75	0	72.7		78	F		E	B	13	5-27-70	2-19-80	.	.	1742	YES
L320 63	L20	D	1	8-15-75	0	69.8	75.2	18	F	322	E	U	6	8-15-75	2- 1-80	.	80.5	1705	YES
L320 64	L12	D	1	2-27-75	3800401	73.3	78.7	64	F	322620	E	U	6	2-27-75	12-27-79	75.2	80.6	1873	YES
L320 70	L2-D	D	1	2-27-75	3500101			67	F	6907	E	U	13	2-27-75	9-19-79	72.4	80.2	1873	YES
ARC 71		D	1	6- 4-75	135001			63	M	690758	E	U	13	6- 4-75	9-28-79	69.4	74.9	1776	YES
ARC 78		D	1	12- 2-75	1200103	72.0	78.0	82	M		E	U	3	0- 0- 0	3-16-79			1598	YES

ARCC-1268

T E V

ARCO Medical Products Company
Subsidiary of Atlantic Richfield Company
P.O. BOX 546/LEECHBURG, PA. 15656, U.S.A.
PHONE (412) 845-8111/TWX-510-467-8603

NRC REPORT

DATE APRIL 15, 1980

CONTROL PACEMAKERS EXPLANTED

PACEMAKER				IMPLANT DATA				PATIENT		LEAD DATA					EXPLANT DATA				
ID	MODEL NO	FIXED OR DEMAND	MFGR	IMP DATE	HOSPITAL	AUTO RATE	MAGN RATE	AGE	SEX	MODEL	TYPE	POLE	MFGR	IMP DATE	EXPLANT DATE	AUTO RATE	MAGN RATE	DAYS IMPLT	REA-SON
5	5862C	F	13	8- 9-73	500101	71.0		74	M	5818	E	B	13	6- 7-71	10-29-75			810	22
6	5862	F	13	2-14-73	2300101	70.0		61	M	5914	E	U	13	2-14-73	9-15-75			941	02
15	8101	F	4	1-24-73	3300601	63.5		51	F	322	E	U	6	6- 8-67	4-15-73			81	03
33	7	F	6	2-21-74	3500101	70.0		53	F	322	E	U	6	3-15-70	1-11-78			1420	22
43	1608	F	6	4-12-73	3300601	74.0		62	F	322	E	U	6	4-12-73	7-10-75	76.0		818	02
1	5943	D	13	6- 8-73	500101	68.0	68.0	78	M	6905	E	U	13	6- 8-73	12-30-76			1297	01
2	10P44	D	3	5-26-73	500101	70.0	70.0	92	M	1E-60K	E	U	3	5-25-73	9- 9-77			1563	22
3	5943	D	13	10-25-73	500101	70.0		67	M	322	E	U	6	11-23-71	11-20-74			390	03
4	5943	D	13	7- 9-73	500101	71.0	73.0	89	M	6905	E	U	13	7- 9-73	6-16-78			1802	02
7	5942	D	13	11-14-73	2300101	70.0		45	M	5818	E	B	13	11-14-73	3- 1-76			842	25
8	3-70A	D	11	7-10-73	3300601	68.7		60	M	322	E	U	6	7-10-73	4- 5-76			1000	02
9	3-70A	D	11	7-20-73	3300601	70.5		32	F	322	E	U	6	2-20-73	6-11-75	69.0		691	03
10	162C	D	6	7-17-73	3300601	69.6		40	F	322	E	U	6	7-21-70	2-23-78			1681	01
11	162C	D	6	6-18-73	3300601	70.0		65	M	322	E	U	6	6-18-73	10- 7-74			474	02
13	162C	D	6	2- 5-73	3300601	69.3		69	F	322	E	U	6	2- 5-73	6-30-78			1970	01
14	162C	D	5	5-21-73	3300601	68.7		50	F	322	E	U	6	5-21-73	6- 3-78			1837	01
16	8114	D	16	3- 6-73	3300601	66.6		74	M	3629	E	B	16	3- 6-73	1-24-77			1418	01
17	162C	D	6	7-24-73	3300601	70.1		62	M	322	E	U	6	7-24-73	5-16-75			662	02
18	3-70A	D	11	7-11-73	3300601	76.1		77	M	322	E	U	6	7-11-73	4-29-77			1286	01
19	162C	D	6	1-25-73	3300601	69.3		46	M	322	E	U	6	1-25-73	3-11-76			1141	02
20	3-70A	D	11	1- 3-73	3300601	70.2		64	M	6[illegible]8	E	U	11	1- 3-73	2-10-77			1497	25
21	5945	D	13	11- 6-73	4100602	72.0		61	M	3[illegible]3	E	U	6	8-11-69	11-25-75			749	02
22	5945	D	13	4-16-73	4100602	72.0		73	M	6[illegible]13	E	B	13	4-16-73	2-23-76			1042	02
23	5943	D	13	5-13-71	4100602	70.0		44	M	3[illegible]2	E	U	6	9-10-69	1-17-74			980	01

ARCC-1288

TABL (cont.)

ARCO Medical Products Company
Subsidiary of Atlantic Richfield Company
P.O. BOX 546/LEECHBURG, PA. 15656, U.S.A.
PHONE (412) 845-8111/TWX-510-467-8603

NBC REPORT

DATE APRIL 15, 1980

CONTROL PACEMAKERS EXPLANTED

PACEMAKER				IMPLANT DATA				PATIENT		LEAD DATA					EXPLANT DATA				
ID	MODEL NO	FIXED OR DEMAND	NEGR	IPG DATE	HOSPITAL	AUTO RATE	PACN RATE	AGE	SEX	MODEL	TYPE	MODE	NEGR	IMP DATE	EXPLANT DATE	AUTO RATE	PACN RATE	DAYS INPL	REASON
24	5943	D	13	2-12-73	4100602			66	F		E	U	13	8-13-70	3- 1-76			1114	03
25	14387	D	6	4- 4-72	1000101	71.0	71.0	96	M	322	E	U	6	12- 5-69	5-22-75			778	02
26	87	D	6	5- 6-73	1000101	72.0		85	M	322	E	U	6	1-12-70	3- 5-74			184	03
27	87	D	6	3-29-73	1000101	70.0		88	M	322	E	U	6	1- 4-68	11- 7-75			948	02
28	14387	D	6	3-23-72	1000101	72.0		70	F	322	E	U	6	11- 4-68	7-22-74	68.0		849	01
29	14387	D	6	7-17-72	1000101	71.0		91	M	322	E	U	6	1-12-70	11-25-75			858	02
30	87	D	6	2-22-74	3500101	70.0		59	M	322	E	U	6	8-15-70	7- 2-77			1225	03
31	7	D	6	5- 7-73	3500101	69.0		59	M	322	E	U	6	8-15-70	12- 8-75			941	01
32	5943	D	13	10- 4-73	3500101	72.0		60	M	6907	E	U	13	10- 4-73	6-29-77			1365	22
34	1620	D	6	10-12-73	3300601	71.0		65	M	322	E	U	6	10-12-73	6-29-76			992	02
35	184A	D	6	10-29-74	3300601	65.0		60	F	322	E	U	6	10-29-74	11-30-79			1856	03
36	10P44	D	3	8- 5-74	3500101	70.0	70.6	64	F	1600K	E	U	3	2-22-73	2-17-77			927	25
37	44	D	3	6- 3-74	3500101	70.0	71.3	59	F	1600K	E	U	3	6-13-74	6-22-78			1479	25
38	5951	D	13	5-21-75	3500101	74.0	74.0	22	F	6907			13	10-16-75	7-31-75			70	03
40	5944	D	13	9-19-74	4100602	73.0		69	M	5901	E	U	13	9-19-74	10- 9-78			1480	22
41	5945	D	13	9- 6-74	000201	72.0		59	M	690758	E	U	13	9- 6-74	10- 7-75	60.0	78.0	396	11
42	5945	D	13	1-22-75	2300101	71.0		26	F	022271	E	U	7	2-22-71	6- 8-77			866	25
44	1620	D	6	9- 5-73	3300601	62.0		54	F	322	E	U	6	9- 5-73	1-12-79			1957	02
45	8114	D	16	10-23-72	3300601	93.0		58	M	3829	E	U	16	10-23-72	4-15-75	90.0		907	02
46	384A	D	6	1- 9-73	3300601	72.0		52	M	322	E	U	6	1- 9-73	7- 5-75			906	03
47	5942	D	13	8-22-73	3500301	69.0		81	M	5816	E	U	13	8-22-73	11-16-73			84	03
48	5961	D	13	11-21-73	3500301	65.0		69	M		E	U	13	11-21-73	11- 4-75			713	03
49	5961	D	13	11-29-73	3500301	71.0		75	M	6913	E	U	13	11-29-73	12-21-78			1847	19
50	5961	D	13	12-27-73	3500301	69.5		91	M		E	U	13	12-27-73	9-11-79	.	.	2084	01

ARCC-1268

TABLE (cont.)

ARCO Medical Products Company
Subsidiary of Atlantic Richfield Company
P.O. BOX 546/LEECHBURG, PA. 15656, U.S.A.
PHONE (412) 845-8111/TWX-510-467-8603

NBC REPORT

DATE APRIL 15, 1980

CONTROL PACEMAKERS EXPLANTED

PACEMAKER				IMPLANT DATA				PATIENT		LEAD DATA					EXPLANT DATA				
ID	MODEL NO	FIXED OR PROGRAM	REGR	IMP DATE	HOSPITAL	AUTO RATE	MAGN RATE	AGE	SEX	MODEL	TYPE	MODE	MFGR	IMP DATE	EXPLANT DATE	AUTO RATE	MAGN RATE	DAYS IMPLT	REASON
51	5961	0	13	10-25-74	3500301			81	M	690758	E	U	13	10-25-74	3-27-76			522	03
52	5961	0	13	2-19-75	3500301	72.0		54	M		E	U	13	1-15-72	4-10-78			1146	25
53	5961	0	13	2-21-75	3500301	71.0		68	M	690758	E	U	13	2-21-75	3- 4-76			376	22
54	5961	0	13	3-19-75	3500301	71.0		85	M	690758	E	U	13	3-19-75	11-26-77			977	03
55		0	13	12-31-73	3300601			44	M				0	0- 0- 0	3-22-77	.	.	1181	03
56	1620	0	6	12-26-73	3300601			62	M	283125	E	U	2	12-26-73	9-16-75	75.0		630	02
57	1620	0	6	11-25-74	3300601			60	F	283125	E	U	2	11-25-74	10-21-77			1061	22
58	1620	0	6	12-19-73	3300601			71	M		E	U	3	12-19-73	10-24-75			675	03
59	1620	0	6	7- 2-74	3300601			69	M	322	E	U	6	7- 2-74	5- 8-79	.	.	1771	01
60	1620	0	6	10-14-74	3300601			69	F	322	E	U	6	10-14-74	3-29-79	.	.	1630	01
61	RD-70	0	11	2- 5-74	3300601			63	F	322	E	U	6	2- 5-74	6-22-78			1597	25
65	5961	0	13	9- 8-75	2300101			65	F	5815	E	U	13	2-20-73	4-10-78			947	22
66		0	6	4- 9-75	2400101	72.0		90	F				0	0- 0- 0	6-15-77			796	25
68	120	0	10	6-30-75	2100201	74.0		86	M		E	U	10	6-30-75	2-19-80	.	.	1694	03
72	30140	0	4	6-16-75	3300601	74.3	90.7	64	F		E	U	6	6-16-75	3-11-78			1000	03
73	1620	0	6	6-27-75	3300601	70.0	70.0	57	F		E	U	6	6-27-75	3-30-78			1008	01
74	1620	0	6	10-30-74	3300601			70	M	322250	E	U	0	0- 0- 0	8- 2-76			642	03
75	30100	0	1	6- 5-74	3300601			55	M				0	0- 0- 0	9-19-77			1135	03
76	30100	0	4	11- 6-73	3300601			66	F				6	0- 0- 0	7-31-75			635	03
77	5961	0	13	6- 4-73	3500301			66	M	690758	E	U	13	10-23-74	4-11-76			1042	03
79	5961	0	13	12-17-75	3500301			71	M	6907	E	U	13	12-17-75	12-20-76			368	01
80		0	0	11-20-74	4100601			62	M				0	0- 0- 0	4-27-77			852	25
69	1.1-2	0	1	8-21-75	700101			82	F	590158	E	U	10	8-21-75	8-27-77			736	03

ARCC-1268

TABLE VI

PERCENT OF TREATMENT FAILURES AND AVERAGE

MONTHLY TREATMENT FAILURE RATES

	Nuclear Pacemakers	Control Pacemakers
Number of Implants	126	80
Number of Removals	39	38
Number of Treatment Failures	4	31
TOTAL EXPLANTS	43	69
TOTAL OPERATING	83	11
Average Months of Follow-up Per Patient	53.4	37.8
Percent Treatment Failure	3.2	38.8
Average Monthly Failure Rate x 100	0.059	1.024