DOE/OR/20717--9

DOE/OR/20717--9

DE83 000170

The BRECKINRIDGE PROJECT

Initial Effort

REPORT IX

OPERATING COST ESTIMATE

MASTER

MASTER

ASHLAND SYNTHETIC FUELS, INC.
AIRCO ENERGY COMPANY, INC.

DISCLAIMER

This report was prepared as an account of work sponsored by an agency of the United States Government. Neither the United States Government nor any agency thereof, nor any of their employees, makes any warranty, express or implied, or assumes any legal liability or responsibility for the accuracy, completeness, or usefulness of any information, apparatus, product, or process disclosed, or represents that its use would not infringe privately owned rights. Reference herein to any specific commercial product, process, or service by trade name, trademark, manufacturer, or otherwise, does not necessarily constitute or imply its endorsement, recommendation, or favoring by the United States Government or any agency thereof. The views and opinions of authors expressed herein do not necessarily state or reflect those of the United States Government or any agency thereof.

PREPARED FOR
UNITED STATES DEPARTMENT OF ENERGY
UNDER COOPERATIVE AGREEMENT
NO. DE-FC05-800R20717

DISTRIBUTION OF THIS DOCUMENT IS UNLIMITED

DISCLAIMER

This report was prepared as an account of work sponsored by an agency of the United States Government. Neither the United States Government nor any agency Thereof, nor any of their employees, makes any warranty, express or implied, or assumes any legal liability or responsibility for the accuracy, completeness, or usefulness of any information, apparatus, product, or process disclosed, or represents that its use would not infringe privately owned rights. Reference herein to any specific commercial product, process, or service by trade name, trademark, manufacturer, or otherwise does not necessarily constitute or imply its endorsement, recommendation, or favoring by the United States Government or any agency thereof. The views and opinions of authors expressed herein do not necessarily state or reflect those of the United States Government or any agency thereof.

DISCLAIMER

Portions of this document may be illegible in electronic image products. Images are produced from the best available original document.

The information and data contained in this report are the result of an economic evaluation and a preliminary design effort and because of the nature of this work no guarantees or warranties of performance, workmanship, or otherwise are made, either expressed or by implication.

INITIAL EFFORT REPORTS REFERENCE

Report I - Executive Summary

Report II - Breckinridge Project Design Basis

Report III - Specifications
- Volume 1 - Specifications A through J
- Volume 2 - Specifications K through W

Report IV - Process Units
- Volume 1 - Plants 26, 27 and 1
- Volume 2 - Plants 2, 3 and 4
- Volume 3 - Plants 5, 6 and 17
- Volume 4 - Plant 7
- Volume 5 - Plants 8, 9 and 10
- Volume 6 - Plant 12
- Volume 7 - Plants 15 and 18

Report V - Utilities and Offsites Units
- Volume 1 - Plants 19, 20, 21, 22, 23 and 30
- Volume 2 - Plants 31, 32, 33 and 34
- Volume 3 - Plant 35
- Volume 4 - Plants 36, 37, 38, 39, 40, 41, 42 and 44

Report VI - Project Management Plan

Report VII - Environmental, Socioeconomic, Safety and Health
- Volume 1 - Introduction and Background
- Volume 2 - Environmental Baseline
- Volume 3 - Cultural and Socioeconomic
- Volume 4 - Health and Safety

Report VIII - Capital Cost Estimate

Report IX - Operating Cost Estimate

Report X - Economic Analysis and Financial Plan

Report XI - Technical Audit
Volume 1 - Engineering Comparisons
Volume 2 - Engineering Comparisons
Volume 3 - Critical Design Areas
Volume 4 - Critical Review of the Design Basis
Volume 5 - Critical Review of the Design Basis

REPORT IX

TABLE OF CONTENTS

	PAGE
INITIAL EFFORT REPORTS REFERENCE	i
REPORT IX TABLE OF CONTENTS	iii
REPORT IX LIST OF TABLES	v
REPORT IX LIST OF CHARTS	vi
REPORT IX LIST OF DRAWINGS	vi
1.0 SUMMARY	1-1
2.0 SALARIES AND WAGES	2-1
2.2 PLANT STAFFING TABLE	2-4
2.3 WAGES	2-4
3.0 ELECTRIC POWER SUMMARY	3-1
3.1 PLANT 1, COAL DRYING AND PULVERIZING	3-1
3.2 PLANT 2, COAL SLURRY PREPARATION	3-2
3.3 PLANT 3, H-COAL® PREHEATING AND REACTION	3-2
3.4 PLANT 4, H-COAL® PRIMARY SEPARATION	3-2
3.5 PLANT 5, H-COAL® RECYCLE SLURRY PREPARATION	3-3
3.6 PLANT 6, H-COAL® RECYCLE HYDROGEN COMPRESSION	3-3
3.7 PLANT 7, GAS PLANT	3-3
3.8 PLANT 8, CRYOGENIC HYDROGEN PURIFICATION	3-4
3.9 PLANT 9, SOUR WATER TREATING	3-4
3.10 PLANT 10, SULFUR PLANT	3-5
3.11 PLANT 12, GASIFICATION AND PURIFICATION	3-5
3.12 PLANT 15, OXYGEN PLANT	3-5
3.13 PLANT 17, H-COAL® DISTILLATE SEPARATION	3-7
3.14 PLANT 18, NAPTHA HYDROTREATING AND REFORMING	3-7
3.15 PLANT 19, FLARE SYSTEM	3-7
3.16 PLANT 20, TANKAGE	3-8
3.17 PLANT 21, INTERCONNECTING PIPING	3-8

PAGE

3.18 PLANT 22, RIVER FACILITIES 3-8

3.19 PLANT 23, RAIL, TRUCK, PIPELINE 3-8

3.20 PLANT 26, COAL RECEIVING AND STORAGE 3-8

3.21 PLANT 27, COAL WASHING 3-9

3.22 PLANT 20, ELECTRICAL DISTRIBUTION 3-9

3.23 PLANT 31, STEAM GENERATION AND BOILER FEEDWATER TREATING 3-9

3.24 PLANT 32, WATER SYSTEMS: RAW, POTABLE, COOLING . . . 3-9

3.25 PLANT 33, FIRE SYSTEMS 3-10

3.26 PLANT 34, SEWERS AND WASTEWATER TREATMENT 3-10

3.27 PLANT 35, STACK GAS SCRUBBING 3-10

3.28 PLANT 36, INSTRUMENT AND PLANT AIR SYSTEMS 3-11

3.29 PLANT 37, COMMUNICATION SYSTEM 3-11

3.30 PLANT 38, INERT GAS SYSTEMS 3-11

3.31 PLANT 39, PURGE AND FLUSH OIL SYSTEMS 3-11

3.32 PLANT 41, BUILDINGS 3-12

3.33 PLANT 42, SOLID WASTE MANAGEMENT 3-12

3.34 PLANT 43, SETTLING PONDS 3-12

3.35 PLANT 44, LANDFILL 3-12

3.36 OVERALL PLANT LIGHTING 3-12

4.0 CATALYST AND CHEMICALS COST 4-1

4.1 ANNUAL COST 4-1

4.2 INITIAL INVENTORY AND CONSUMPTION RATES 4-4

5.0 MISCELLANEOUS OPERATING EXPENSES 5-1

6.0 PREOPERATING, CONSTRUCTION PROJECT TEAM, TRAINING, START-UP, AND DEBUGGING COSTS 6-1

7.0 MATERIAL BALANCE 7-1

APPENDIX - UPDATED RELIABILITY - AVAILABILITY ANALYSIS OF BRECKINRIDGE PROJECT

REPORT IX

LIST OF TABLES

TABLE NUMBER		PAGE
1	ANNUAL OPERATING COST	1-2
2	PRODUCTION COST AND VOLUME PROJECTION, FIRST FIVE YEARS OF OPERATION	1-6
3	PLANT STAFFING TABLE	2-15
4	ELECTRICAL POWER SUMMARY FOR DESIGN RATE AND PROJECTED ACTUAL RATE	3-14
5	NET ELECTRICAL POWER CONSUMPTIONS FOR DESIGN RATE AND PROJECTED ACTUAL RATE	3-17
6	ELECTRICAL SUMMARY FOR PLANTS	3-18
7	ANNUAL CATALYST AND CHEMICALS COST	4-2
8	CATALYSTS/PACKINGS/CHEMICALS	4-5
9	ROLLING STOCK FUEL AND TIRES ANNUAL COST	5-1
10	PRE-OPERATING, TRAINING, START-UP, AND DEBUGGING PERSONNEL	6-2
11	PRE-OPERATING AND START-UP EXPENSES	6-3
12	OPERATING COST, FIRST PRODUCTION YEAR, 1988	6-4
13	OPERATING COST SECOND PRODUCTION YEAR, 1989	6-5
14	OPERATING COST, THIRD PRODUCTION YEAR, 1990	6-6
15	OVERALL BLOCK FLOW DIAGRAM, PRODUCT SUMMARY, GASEOUS PRODUCT	7-3
16	OVERALL BLOCK FLOW DIAGRAM, PRODUCT SUMMARY, LIQUID PRODUCTS	7-4

REPORT IX

LIST OF CHARTS

CHART NUMBER		PAGE
1	OPERATING DEPARTMENT	2-5
2	LABORATORY ORGANIZATION AND PERSONNEL	2-7
3	OPERATIONS ORGANIZATION AND PERSONNEL	2-9
4	ENGINEERING ORGANIZATION AND PERSONNEL	2-11
5	SAFETY, HEALTH, ENVIRONMENT AND SECURITY ORGANIZATION AND PERSONNEL	2-12
6	ADMINISTRATION ORGANIZATION AND PERSONNEL	2-13
7	MAINTENANCE ORGANIZATION AND PERSONNEL	2-14

LIST OF DRAWINGS

DRAWING NUMBER		PAGE
50E-A-1	OVERALL SITE PLAN	2-25
50-D-B-1	OVERALL BLOCK FLOW DIAGRAM	7-7

1.0 SUMMARY

Operating costs are normally broken into three major categories: variable costs including raw materials, annual catalyst and chemicals, and utilities; semi-variable costs including labor and labor related cost; and fixed or capital related charges.

The raw materials and utilities costs are proportional to production; however, a small component of utilities cost is independent of production. The catalyst and chemicals costs are also normally proportional to production.

Semi-variable costs include direct labor, maintenance labor, labor supervision, contract maintenance, maintenance materials, payroll overheads, operation supplies, and general overhead and administration. Fixed costs include local taxes, insurance and the time value of the capital investment. The latter charge often includes the investor's anticipated return on investment.

In determining operating costs for financial analysis, "return on investment" (ROI) and depreciation are not treated as cash operating costs. These costs are developed in the financial analysis; the annual operating cost determined here omits ROI and depreciation.

Project Annual Operating Costs are summarized in Table 1. Detailed supporting information for the cost elements listed below is included in the following sections:

- Electrical
- Catalyst and chemicals
- Salaries and wages

TABLE 1

ANNUAL OPERATING COST
1991 (87% Onstream)

		Annual Cost 1981 Dollars
Coal - $29 per ton, 26,497 tpsd		242,280,600
Power - 170,000 Kwh/hr @ 3.65¢ Kwhr		46,954,500
Annual Catalyst and Chemicals		34,380,000
Rolling Stock Fuel and Tires		3,045,000
Operating Supplies @ 15% of Maintenance		7,241,500
	Subtotal	333,901,600
Direct Labor and Supervision		13,265,300
	Subtotal	13,265,300
Maintenance Labor and Supervision		14,965,900
Maintenance Material		21,967,700
Contract Maintenance		11,343,100
	Subtotal	48,276,700
General Administration Services; Laboratory; Safety, Health, Environmental, Security, and Engineering		8,782,500
Local Taxes and Insurance @ 1.5% of Investment		47,511,500
	TOTAL ANNUAL OPERATING COST	451,737,600

During the preliminary stage of the Phase Zero work, a reliability analysis was developed in which various combinations of trains, sparing, manifolding and intermediate storage were compared on the basis of dollars of capital investment per annual barrel of production. The preliminary reliability analysis is included in Volume 1 of Report XI. When the Phase Zero design was complete, a second reliability analysis was developed for the actual Phase Zero design. This analysis, which is included in this report, projects annual production from the facility on the basis of design stream day production and scheduled and unscheduled downtime. Catalyst and chemicals costs, coal feedstock costs, boiler fuel coal costs, and purchased electrical costs have all been adjusted to a calendar day basis using this reliability analysis. The exact adjustment methods are explained in the sections dealing with the respective cost items.

The electrical cost section includes a motor list for each plant with connected and normal stream day loads. These stream day loads have been translated to annual electrical consumption using the reliability analysis and an accompanying analysis of the relationship between production and electrical consumption on a plant-by-plant basis.

The catalyst and chemical section includes a tabulation of chemical and catalyst consumption by use point as well as a translation of consumption to annual cost using quoted and estimated prices. The catalyst and chemicals annual cost has been adjusted to reflect the results of the reliability analysis.

The salaries and wages section includes seven organization charts which present in detail the breakdown of the project's 1545 hourly and salaried employees. The wage and salary rates used are shown in Table 3. All costs are in January 1981 dollars.

Obtaining reliable coal pricing data is contingent on execution of long term supply contracts with associated financial commitments. This was, of course,

not possible during the Phase Zero work although a number of suppliers were quite cooperative in providing supply proposals. A second complication was created by the need to make a decision early in the work to design the plant for receiving run-of-mine coal (ROM). It became apparent when the supply proposals began to be issued that receiving ROM coal was not the preferred arrangement and that receiving washed or partially washed coal would be more economical. Indeed most of the supply proposals were for washed or partially washed coal.

Since the capital estimate and operating cost estimate (non-coal costs) were set up on the basis of receiving ROM coal, it was necessary to adjust the supply proposals to an ROM basis so as to have internally consistent costs.

The ROM price of coal used to establish operating costs in this report is based on an average of those bids for washed coal considered to be competitive. The composite cost of washed coal delivered to the Breckinridge site based on the competitive bids was $37.60 per "as received" ton including transportation. The composite price and analysis was adjusted to reflect transportation of ROM coal and washing at the Addison Plant site. An adjusted composite cost for delivered as received ROM coal of $29.00 per ton was used for the Phase Zero operating cost.

Operating supplies have been estimated at 15% of total maintenance cost based on industry experience. Similarly, maintenance materials have been estimated at 100% of maintenance salaries, wages and fringes. Rolling stock fuel and tires have been estimated based on surface mining experience. The local taxes and insurance have been conservatively adjusted upward from prevailing rates in Breckinridge County to reflect the fundamental changes which would result from construction of a large facility in this basically rural area.

Operating costs have also been developed for the transition period during which construction, commissioning, start-up and operations overlap. These

costs are included on a year-by-year basis in the section devoted to preoperational and start-up costs.

During the start-up of such a large and complex installation, a systematic stepwise procedure will be used. Individual trains of equipment will be brought on-line as construction is completed. According to the present schedule, the first two liquefaction reactors will be started up at the beginning of the second quarter of 1988. The final two liquefaction trains will be ready for start-up at the beginning of the first quarter of 1989. Present plans are based on at least three years of operation at less than full capacity. Year-by-year operating costs during the start-up period and the associated projected annual production rates are summarized in Table 2.

Also included in the preoperational and start-up section is a projection of the Operator's staff costs in the years prior to production. These estimated total costs include technical, administrative, and operating salaries and wages amounting to $100,586,000 in January, 1981 dollars.

A final section includes the overall facility material balance and the associated supporting rationale. This information is associated principally with revenues, however, it has been included in the operating cost report since the annual production establishes the coal requirement and to some extent the purchased power requirement.

TABLE 2

PRODUCTION COST AND VOLUME PROJECTION

FIRST FIVE YEARS OF OPERATION

Year	Annual Production, MM BBLS	Annual Costs 1981 Dollars
1988	3.85	177,623,000
1989	9.65	314,115,700
1990	15.40	424,564,800
1991	16.80	451,737,600
1992	16.80	451,737,600

Salaries and Wages

2.0 SALARIES AND WAGES

Many of the items in the annual operating costs are dependent upon the labor, therefore, considerable time has been devoted to the evolution of a Staffing Table for facility operations. This required the preparation of an overall organization chart for the management and operation of the facility, Chart 1. To accomplish this objective, the facility organization is divided into six functional areas under one Vice President and General Manager. Each of these areas, shown on Chart 1, is headed by a Director responsible for that particular functional group. Then under each Director, organization charts for all of the functional areas, Charts 2 through 7, have been prepared.

The six functional areas are:

- Laboratory
- Operations
- Engineering
- Environmental, Health, Safety and Security
- Administration
- Maintenance

The overall organization shown on Chart 1 gives the total required personnel for plant operations.

The breakdown of personnel as shown on the chart is as follows:

Vice President and General Manager's Office	2
Laboratory	62
Operations	425
Engineering	58
Environmental, Health, Safety and Security	54
Administration	121
Maintenance (in-house and contract)	823
Total	1545

Of the 823 total maintenance personnel, 300 are contract maintenance people and represent an average contract force.

When the facility is in actual operation, some shifting of personnel will undoubtedly be necessary, but it is believed that the above personnel are adequate for operation.

The Laboratory Director will have both the routine and research groups with each group headed by a Manager and Chief Chemist. The routine lab will perform the tests necessary to assure process control and product quality. The research group will do work to improve processing as well as product development work. The organization and personnel are shown on Chart 2.

The Director of Operations will be responsible for the day-to-day operation of the facility. The organization shown on Chart 3 is broken down into five major areas each of which are under an area superintendent and

an area engineer. Also, there is one night area superintendent. Under each area superintendent, there are five shift superintendents for each area. The areas have been determined as shown on the plot plan, Drawing 50E-A-1; the Roman numerals indicate the various operational areas and the chart shows where each plant or group of plants is in relation to the organization. For example, the IIA and IIB groupings include the hydrogenation areas plus distillation or four trains each of Plants 2 through 6 and distillation, Plant 17. The plants in each area are listed at the bottom of the organization chart.

The Director of Engineering will be responsible for technical services, process design, mechanical design, and the inspection department. The organization is shown on Chart 4 and is self-explanatory.

The Director of Health, Safety, Environment and Security will be responsible for these important areas. Chart 5 shows the various functions and estimated number of personnel required.

The Director of Administration will be responsible for the Accounting Department, Personnel Department, Purchasing Department and General Office Services. Each of these functions is in turn controlled by a Manager and/or Supervisor. Chart 6 is the organization diagram for Administration.

The Director of Maintenance is responsible for the day-to-day maintenance of the plant, contract and/or turnaround maintenance, maintenance services, maintenance engineering and planning, and the warehouse. The maintenance work force is divided among one main shop and five satellite shops and the approximate locations of these shops are shown on the plot plan, Drawing 50E-A-1. The main shop is denoted as B-1 with the satellite shops numbered B-2 through B-6.

The organization shown on Chart 7 lists two assistant directors and nine superintendents and/or managers. In addition to the six shop superintendents there are three managers for maintenance service, engineering and planning, and contract maintenance.

2.2 PLANT STAFFING TABLE

The Plant Staffing Table, Table 3, based on the organization previously discussed, lists each hourly job, the shifts covered, total shifts per day, total personnel required, wages in dollars per manhour, wages in dollars per day, days per year, and the annual cost in dollars. For the salaried personnel, only the annual salary and annual costs are listed in addition to shifts covered, shifts per day, and total personnel.

The Staffing Table is the instrument used to determine the direct labor costs, direct labor supervision, the maintenance cost, maintenance supervision, maintenance material, contract maintenance cost, payroll overhead, operating supplies, and indirect and administrative costs.

2.3 WAGES

The hourly wages for contract maintenance personnel include fringe benefits which are not included in other hourly wages or in the annual salaries of the salaried personnel listed. It should also be noted that the contract maintenance force listed is intended to be an average contract maintenance force and it will fluctuate considerably depending on need.

The wages for operations and in-house maintenance personnel are based on the H-Coal® pilot plant wage scales in force as of January 1981. The contract maintenance wages were obtained from Ashland's Lousiville, Kentucky refinery as of the above date. The annual salaries of the salaried personnel are estimated from Ashland's salary structure.

Chart 1

OPERATING DEPARTMENT

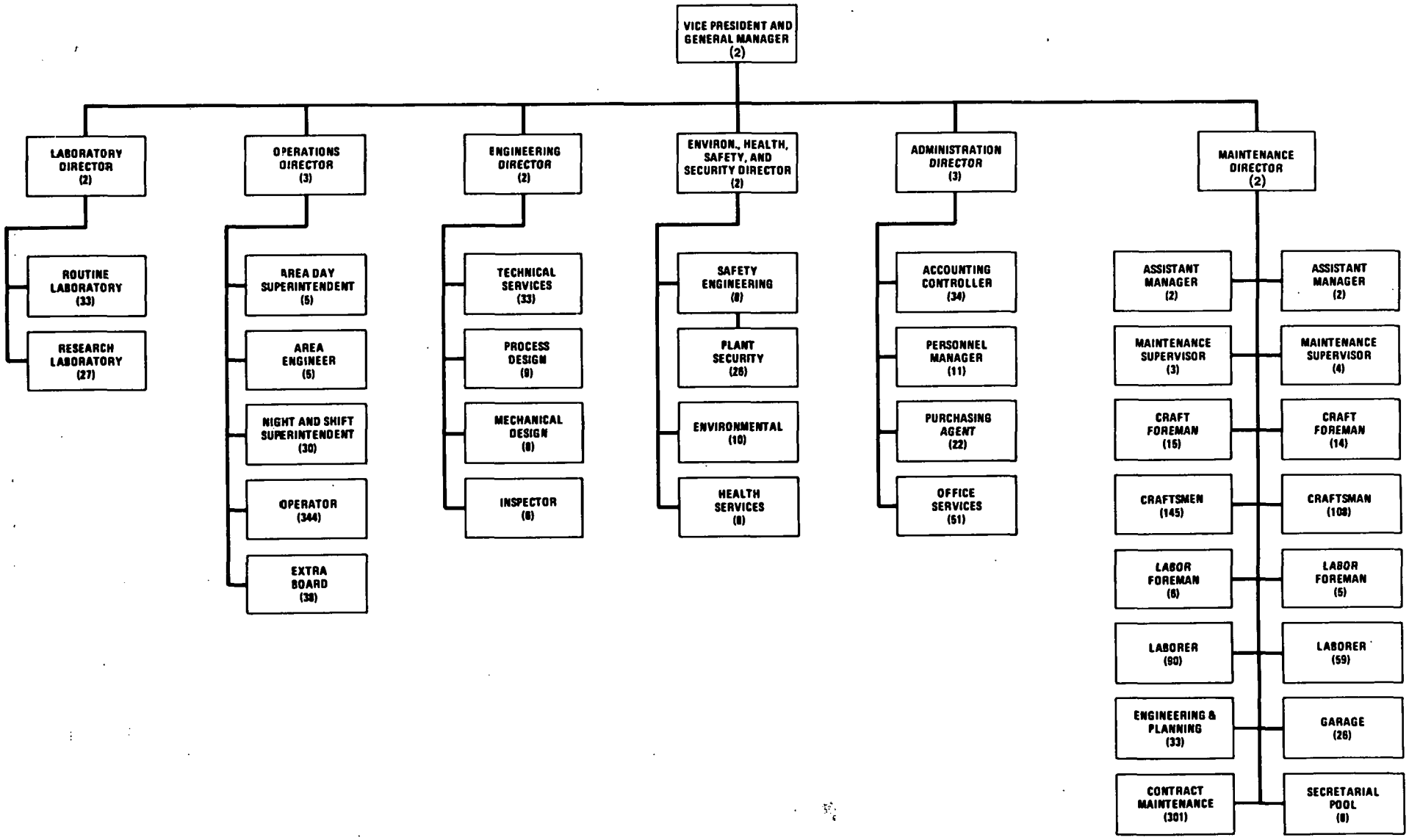

2.4-2-5

THIS PAGE

WAS INTENTIONALLY

LEFT BLANK

THE BRECKINRIDGE PROJECT

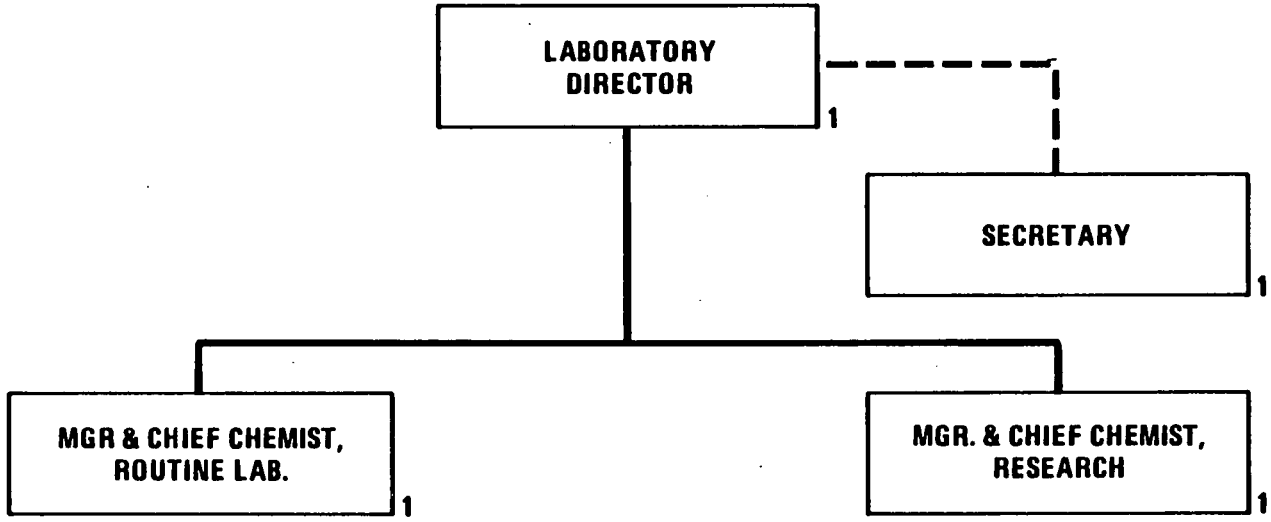

SENIOR CHEMIST	2
SHIFT CHEMIST, LDR.	4
SHIFT TECHNICIAN	25.2
SECRETARY	1

RESEARCH CHEMIST	9
INSTR. TECHNICIAN	1
LIBRARIAN	1
SHIFT TECHNICIAN	12.6
STATISTICIAN	1
SECRETARY	1

11/10/80

CHART 2 – LABORATORY ORGANIZATION AND PERSONNEL

THE BRECKINRIDGE PROJECT

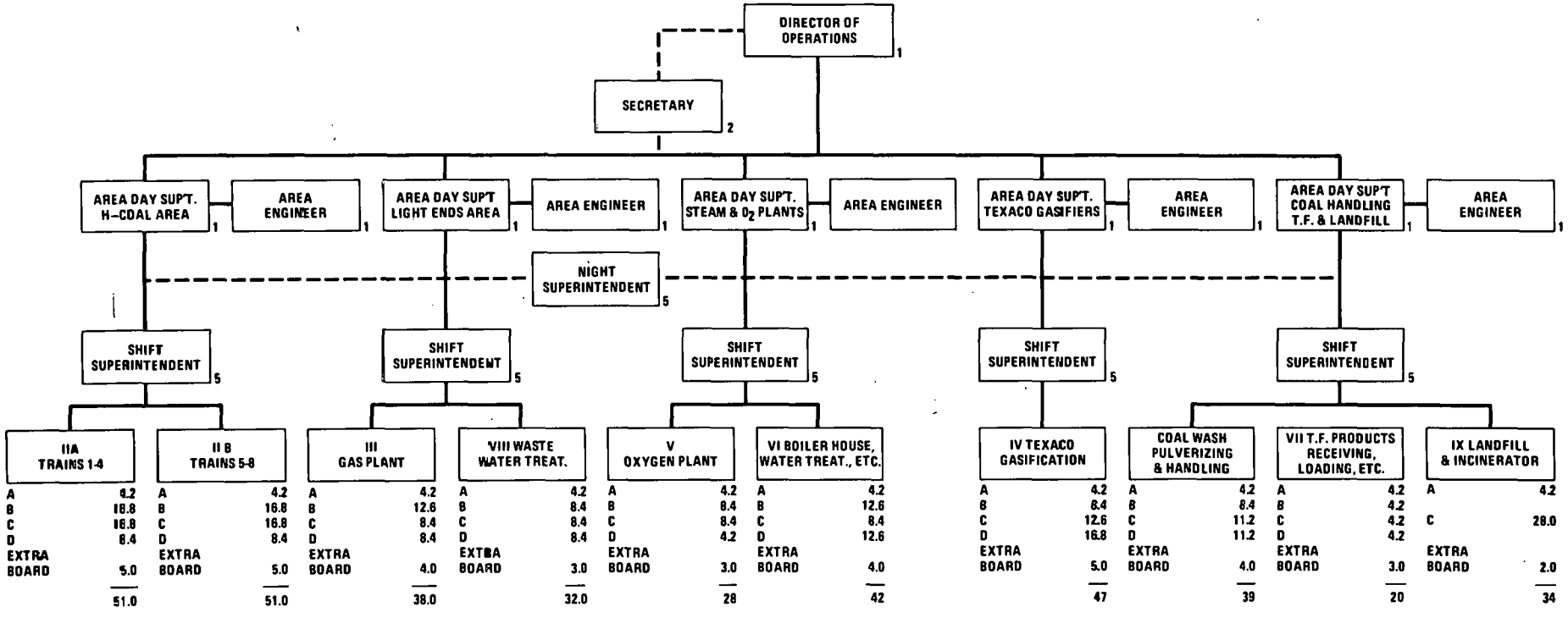

AREA		PLANTS
I	–	26,27,1
II	–	2,3,4,5,6&17
III	–	7,8,9,10&18
IV	–	12
V	–	15
VI	–	31,35
VII	–	19,20,32
VIII	–	34
IX	–	43,44

A – A OPERATOR
B – B OPERATOR
C – C OPERATOR
D – D OPERATOR

CHART 3 – OPERATIONS ORGANIZATION AND PERSONNEL

11/10/80

2-8, - 2-10

PAGES 2-9 to 2-10

WERE INTENTIONALLY

LEFT BLANK

THE BRECKINRIDGE PROJECT

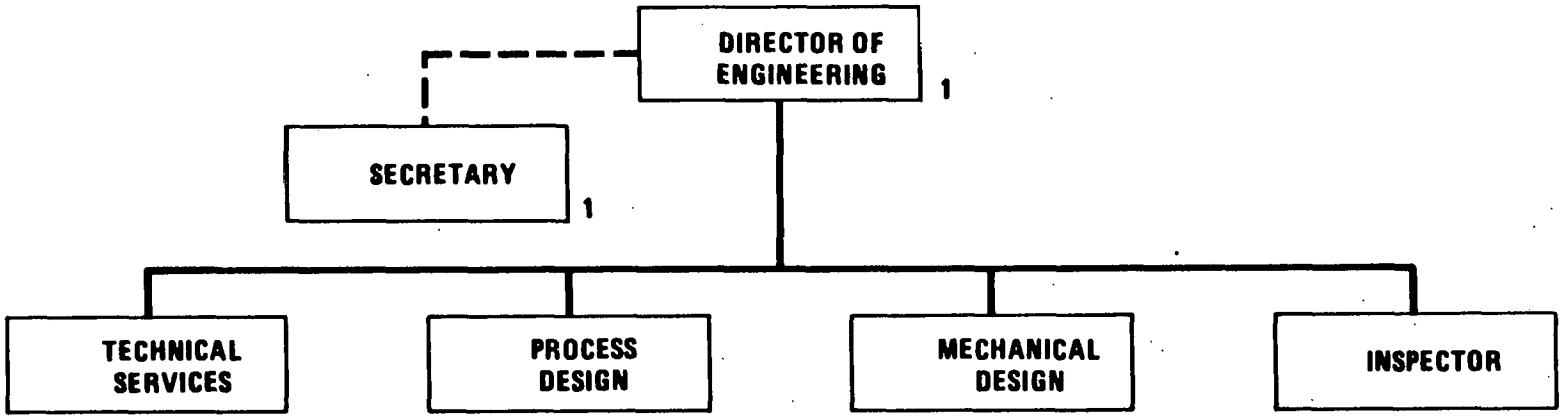

MGR. TECH. SERVICES	1
CHEM. GROUP LEADER	1
CHEMICAL ENGR.	6
MECH. GROUP LEADER	1
MECH. ENGR.	4
SECRETARY	1
STENOGRAPHER	4
ELECT. ENGR.	2
INSTR. ENGR.	2
CIVIL ENGR.	1
DRAFTSMAN	3
SUPV' COMPUTER SERVICE	1
COMPUTER ENGR.	2
COMPUTER PROGR.	2
KEY PUNCH/OPER.	2

CHIEF PROC. ENGR.	1
GROUP LEADER	1
CHEM. ENGINEER	6
SECRETARY	1

CHIEF MECH. ENGR.	1
GROUP LEADER	1
MECH. ENGINEER	5
SECRETARY	1

CHIEF INSPECTOR	1
INSPECTOR	4
SECRETARY	1

11/10/80

CHART 4 – ENGINEERING ORGANIZATION AND PERSONNEL

THE BRECKINRIDGE PROJECT

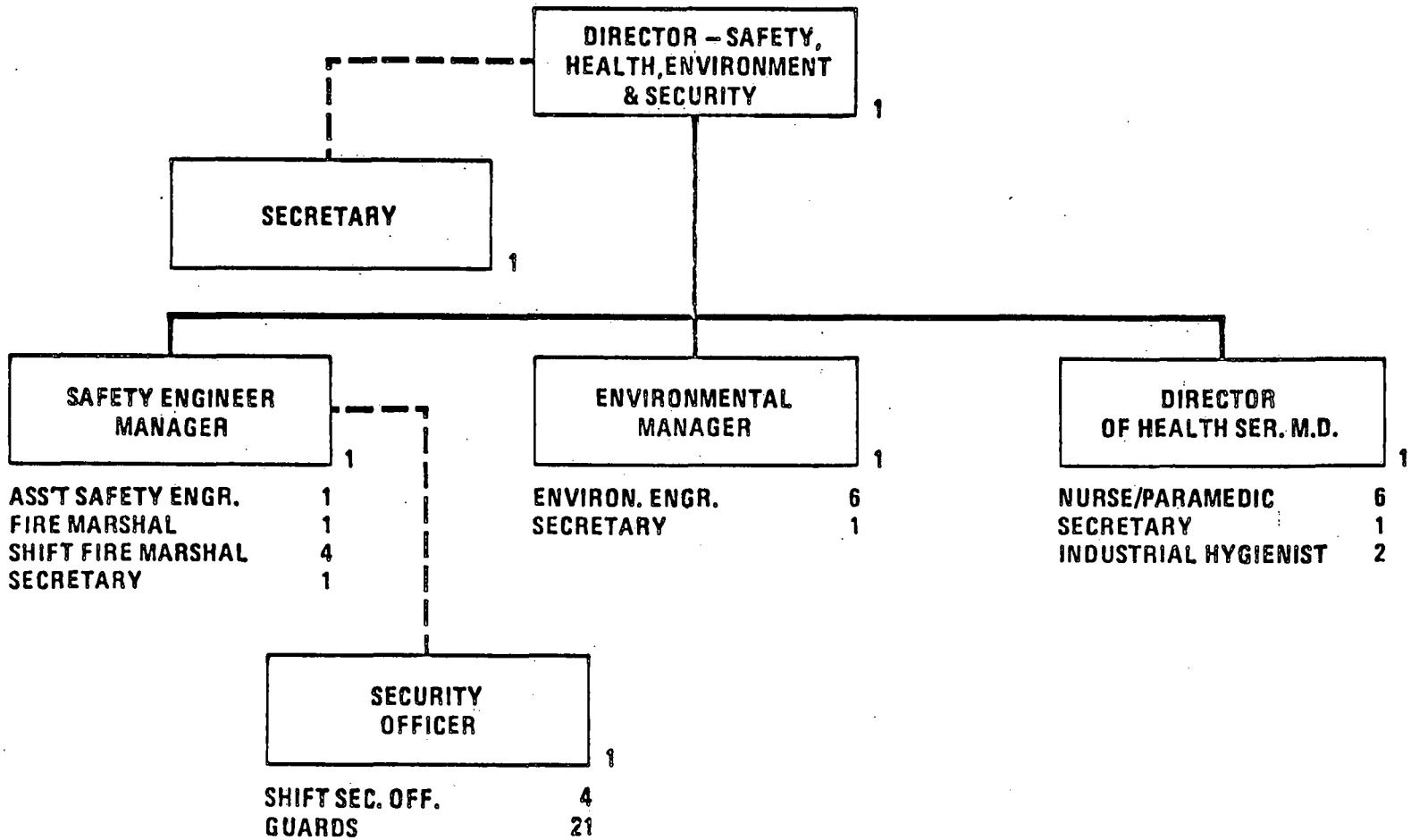

11/10/80

CHART 5 – SAFETY, HEALTH, ENVIRONMENT AND SECURITY ORGANIZATION AND PERSONNEL

THE BRECKINRIDGE PROJECT

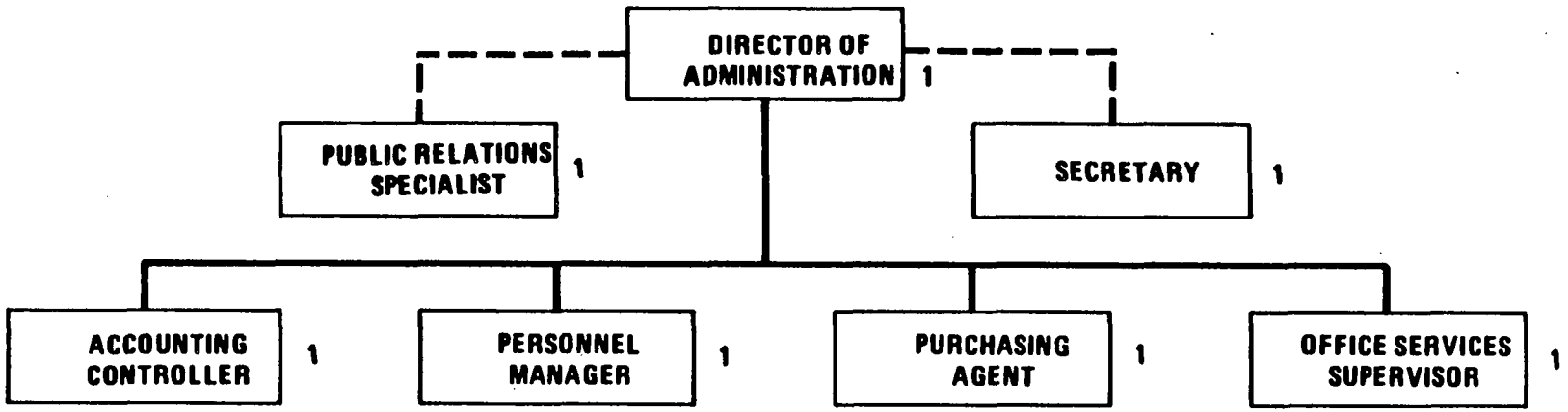

ACCOUNTING MGR.	1
COMPUTER PROG.	2
COMPUTER OPER.	4
KEYPUNCH OPER.	3
ACCT. PAYABLE SUP.	1
ACCOUNTANT	1
ACCT. PAYABLE CLERK	5
MICROFILMER	1
GEN. ACCT. SUPR.	1
PROPERTY ACCT.	1
CONSOL. ACCT.	1
SYSTEMS ACCT	1
CLERK	4
PAYROLL CLERK	3
COST ACCT.	2
SECRETARY	1
TYPIST	1

PERSONNEL ASST.	1
EEO SUPERVISOR	1
CLERK	3
SUPER . EMP. REL.	1
ASST. EMP. REL.	1
SECRETARY	1
TRAINING SUPER.	1
TRAINING SPEC.	1

BUYER	10
EXPEDITOR	2
CLERK	2
TYPIST	6
SECRETARY	1

MAIL CLERK	1
MESSENGER	1
DRIVER	1
OFFICE EQUIP. OPER.	2
POOL STENOGRAPHER	4
JANITOR	10
CHIEF CLERK	1
YIELD CLERK	2
INVENTORY CLERK	2
RECORDS CLERK	1
TRAFFIC CLERK	1
LOADING CLERK	4
CAFETERIA	20

11/10/80

CHART 6 – ADMINISTRATION ORGANIZATION AND PERSONNEL

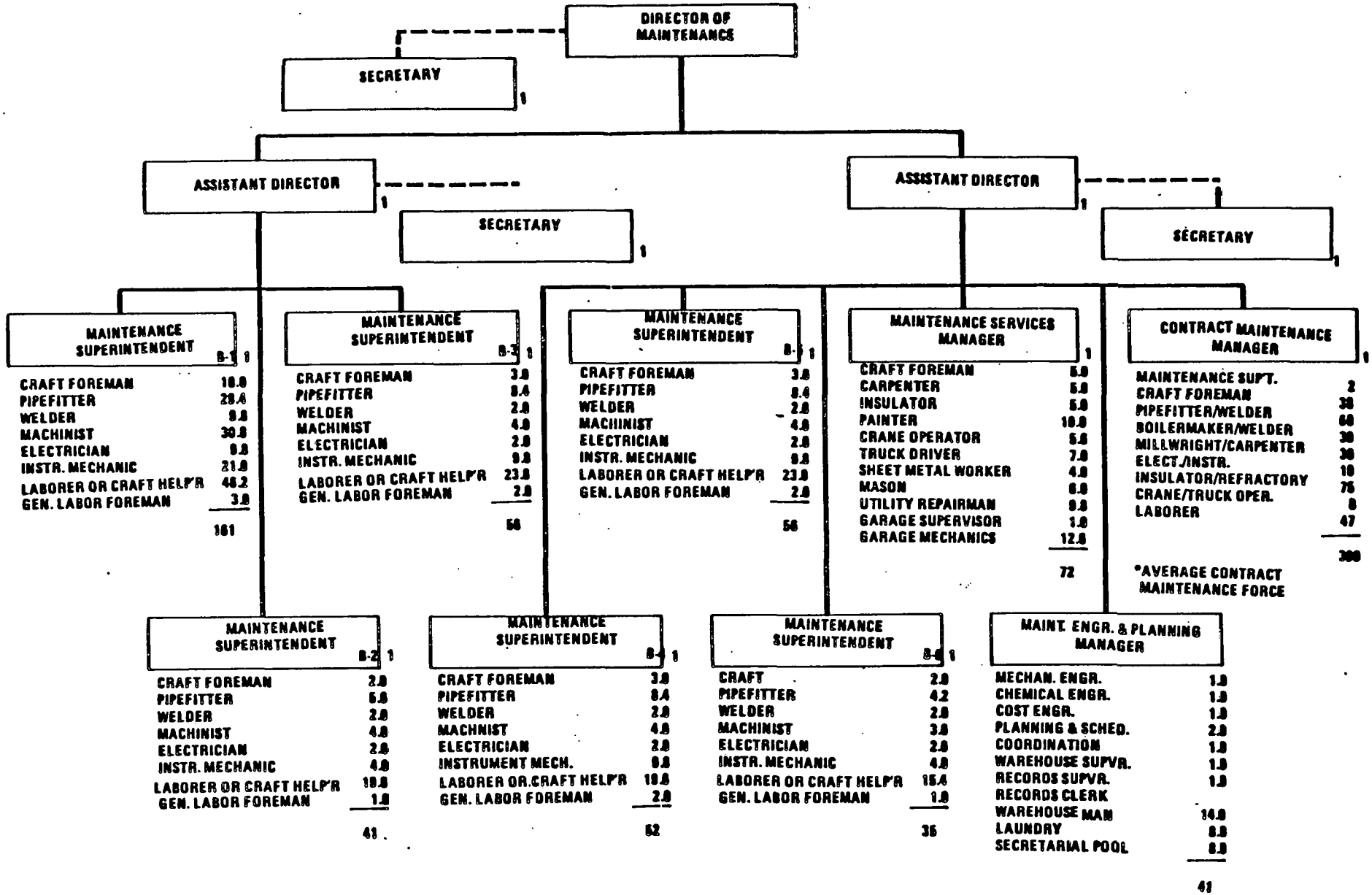

CHART 7 – MAINTENANCE ORGANIZATION AND PERSONNEL

11/10/80

TABLE 3 (Sheet 1 of 10)

PLANT STAFFING TABLE
WAGES AND SALARIES FOR GENERAL ADMINISTRATION ON SERVICES, LABORATORY, SAFETY, HEALTH ENVIRONMENT AND SECURITY, ENGINEERING

Division and Personnel	Shift day	Shift aft	Shift ngt	Shifts per day	Total personnel	Wages dollars per manhour	Wages dollars per day	Days per year	Annual cost, dollars	Salaried workers, dollars per year	Total annual cost, dollars
GENERAL ADMINISTRATION AND SERVICES											
Vice President & Gen. Mgr.	1			1	1					75,000	75,000
Secretary	1			1	1					18,000	18,000
Director of Administration	1			1	1					52,000	52,000
Public Relations Specialist	1			1	1					28,000	28,000
Secretary	1			1	1					16,000	16,000
Accounting Controller	1			1	1					40,000	40,000
Accounting Manager	1			1	1					35,000	35,000
Computer Programmer	2			2	2					22,000	44,000
Computer Operator	1	1	1	3	4					18,000	72,000
Keypunch Operator	2	1		3	3					12,000	36,000
Accounts Payable Supervisor	1			1	1					24,000	24,000
Accountant	1			1	1					22,000	22,000
Accounts Payable Clerk	5			5	5					12,000	60,000
Microfilmer	1			1	1					15,000	15,000
General Accounting Supervisor	1			1	1					26,000	26,000
Property Accountant	1			1	1					24,000	24,000
Consolidation Accountant	1			1	1					24,000	24,000
Systems Accountant	1			1	1					24,000	24,000
Clerk	4			4	4					10,800	43,200
Payroll Clerk	3			3	3					16,000	48,000
Cost Accountant	2			2	2					24,000	48,000
Secretary	1			1	1					16,000	16,000
Typist	1			1	1					10,800	10,800
Personnel Manager	1			1	1					40,000	40,000
Personnel Ass't. Manager	1			1	1					36,000	36,000

TABLE 3 (Sheet 2 of 10)

PLANT STAFFING TABLE
WAGES AND SALARIES FOR GENERAL ADMINISTRATION ON SERVICES, LABORATORY, SAFETY, HEALTH ENVIRONMENT AND SECURITY, ENGINEERING

Division and Personnel	Shift day	aft	ngt	Shifts per day	Total per-sonnel	Wages dollars per manhour	Wages dollars per day	Days per year	Annual cost, dollars	Salaried workers, dollars per year	Total annual cost, dollars
EEO Supervisor	1			1	1					30,000	30,000
Clerk	3			3	3					13,000	39,000
Supervisor Employee Rel.	1			1	1					26,000	26,000
Ass't. Sup'v. Employee Rel.	1			1	1					22,000	22,000
Secretary	1			1	1					16,000	16,000
Training Supervisor	1			1	1					36,000	36,000
Training Specialist	1			1	1					32,000	32,000
Purchasing Agent	1			1	1					36,000	36,000
Buyer	10			10	10					26,000	260,000
Expeditor	2			2	2					18,000	36,000
Clerk	2			2	2					10,800	21,600
Typist	6			6	6					12,000	72,000
Secretary	1			1	1					16,000	16,000
Office Services Supervisor	1			1	1					28,000	28,000
Mail Clerk	1			1	1					10,500	10,500
Messenger	1			1	1					10,500	10,500
Driver	1			1	1					16,000	16,000
Office Equip. Operator	2			2	2					12,000	24,000
Pool Stenographer	4			4	4					15,000	60,000
Janitor	2	2	6	10	10					12,800	128,000
Chief Clerk	1			1	1					21,000	21,000
Yield Clerk	2			2	2					18,000	36,000
Inventory Clerk	2			2	2					16,000	32,000
Records Clerk	1			1	1					16,000	16,000
Traffic Clerk	1			1	1					15,000	15,000
Loading Clerk	4			4	4					15,000	60,000
Cafeteria	20			20	20					10,800	216,000
SUBTOTAL					123						2,192,600

TABLE 3 (Sheet 3 of 10)

PLANT STAFFING TABLE
WAGES AND SALARIES FOR GENERAL ADMINISTRATION ON SERVICES, LABORATORY, SAFETY, HEALTH ENVIRONMENT AND SECURITY, ENGINEERING

Division and Personnel	Shift day	aft	ngt	Shifts per day	Total personnel	Wages dollars per manhour	Wages dollars per day	Days per year	Annual cost, dollars	Salaried workers, dollars per year	Total annual cost, dollars
LABORATORY											
Laboratory Director	1			1	1					52,000	52,000
Secretary	1			1	1					16,000	16,000
Chief Chemist, routine Lab.	1			1	1					38,000	38,000
Senior Chemist	2			2	2					36,000	72,000
Lead Chemist	1	1	1	3	4					32,000	128,000
Shift Technician	6	6	6	18	25	11.75	94.00	365	617,600		617,600
Secretary	1			1	1					15,000	15,000
Chief Chemist Research	1			1	1					38,000	38,000
Research Chemist	9			9	9					36,000	324,000
Shift Technician	3	3	3	9	13	11.75	94.00	365	308,800		308,800
Instrument Technician	1			1	1	11.75	94.00	260	24,400		24,400
Statistician	1			1	1					24,000	24,000
Librarian	1			1	1					18,000	18,000
Secretary	1			1	1					15,000	15,000
SUBTOTAL					62						1,690,800
SAFETY, HEALTH, ENVIRONMENT AND SECURITY											
Director	1				1					48,000	48,000
Secretary	1				1					16,000	16,000
Safety Engineering Manager	1				1					36,000	36,000
Assistant Safety Engineer	1				1					34,000	34,000
Fire Marshal	1				1					26,000	26,000
Shift Fire Marshal	1	1	1	3	4					24,000	96,000
Secretary	1			1	1					16,000	16,000
Security Officer	1			1	1					24,000	24,000
Shift Security Officer	1	1	1	3	4					22,000	88,000
Guard	5	5	5	15	21	9.40	75.20	365	411,700		411,700

TABLE 3 (Sheet 4 of 10)

PLANT STAFFING TABLE
WAGES AND SALARIES FOR GENERAL ADMINISTRATION ON SERVICES, LABORATORY, SAFETY, HEALTH ENVIRONMENT AND SECURITY, ENGINEERING

Division and Personnel	Shift day	aft	ngt	Shifts per day	Total per-sonnel	Wages dollars per manhour	Wages dollars per day	Days per year	Annual cost, dollars	Salaried workers, dollars per year	Total annual cost, dollars
Environmental Manager	1			1	1					42,000	42,000
Environmental Engineer	2	1	1	4	6					36,000	216,000
Secretary	1			1	1					15,000	15,000
Director Health Service M.D.	1			1	1					50,000	50,000
Nurse/Paramedic	2	1	1	4	6					23,000	138,000
Secretary	1			1	1					15,000	15,000
Industrial Hygienist	1	1		2	2					36,000	72,000
									411,700		1,343,700
ENGINEERING											
Director of Engineering	1			1	1					60,000	60,000
Secretary	1			1	1					18,000	18,000
Manager of Technical Services	1			1	1					56,000	56,000
Chem. Eng'r. Group Leader	1			1	1					44,000	44,000
Chemical Engineer	6			6	6					36,000	216,000
Mech. Eng'r. Group Leader	1			1	1					42,000	42,000
Mechanical Engineer	4			4	4					35,000	140,000
Secretary	1			1	1					16,000	16,000
Stenographer	4			4	4					15,000	60,000
Electrical Engineer	2			2	2					35,000	70,000
Instrument Engineer	2			2	2					35,000	70,000
Civil Engineer	1			1	1					35,000	35,000
Draftsman	3			3	3					22,000	66,000
Supervisor Computer Services	1			1	1					38,000	38,000
Computer Engineer	2			2	2					36,000	72,000
Computer Programmer	2			2	2					24,000	48,000
Keypunch Operator	2			2	2					10,800	21,600

TABLE 3

(Sheet 5 of 10)

PLANT STAFFING TABLE
WAGES AND SALARIES FOR GENERAL ADMINISTRATION ON SERVICES, LABORATORY, SAFETY, HEALTH ENVIRONMENT AND SECURITY, ENGINEERING

Division and Personnel	Shift day aft ngt	Shifts per day	Total per-sonnel	Wages dollars per manhour	Wages dollars per day	Days per year	Annual cost, dollars	Salaried workers, dollars per year	Total annual cost, dollars
Chief Process Engineer	1	1	1					56,000	56,000
Group Leader	1	1	1					42,000	42,000
Chemical Engineer	6	6	6					36,000	216,000
Secretary	1	1	1					16,000	16,000
Chief Mechanical Engineer	1	1	1					42,000	42,000
Group Leader	1	1	1					42,000	42,000
Mechanical Engineer	5	5	5					35,000	175,000
Secretary	1	1	1					16,000	16,000
Chief Inspector	1	1	1					34,000	34,000
Inspector	4	4	4					32,000	128,000
Secretary	1	1	1					16,000	16,000
SUBTOTAL			58						1,855,600
TOTAL									7,082,700
PAYROLL OVERHEAD @ 24%									1,699,800
TOTAL XXXXX COSTS									8,782,500

TABLE 3

(Sheet 6 of 10)

PLANT STAFFING TABLE
WAGES & SALARIES FOR MAINTENANCE LABOR AND MAINTENANCE LABOR SUPERVISION

Position	Shift day	Shift aft	Shift ngt	Shifts per day	Total personnel	Wages dollars per manhour	Wages dollars per day	Days per year	Annual cost, dollars	Salaried workers, dollars per year	Total annual cost, dollars
Director of Maintenance	1			1	1			260		65,000	65,000
Assistant Director	2			2	2			260		56,000	112,000
Secretary	1			1	1			260		18,000	18,000
Secretary	2			2	2			260		16,000	32,000
Maintenance Superintendent, Shops	5			5	5			260		52,000	260,000
Maintenance Superintendent, Services	1			1	1					52,000	52,000
Maint. Super., Engr. and Planning	1			1	1			260		52,000	52,000
Maint. Super., Contract Force	1			1	1			260		52,000	52,000
Craft Foreman, B-1	3	2	2	7	10	12.02	96.16	365	245,700		245,700
Craft Foreman, B-2	1	1		2	3	12.02	96.16	365	70,200		70,200
Craft Foreman, B-3	1	1		2	3	12.02	96.16	365	70,200		70,200
Craft Foreman, B-4	1	1		2	3	12.02	96.16	365	70,200		70,200
Craft Foreman, B-5	1	1		2	2	12.02	96.16	260	50,000		50,000
Craft Foreman, B-6	1	1		2	2	12.02	96.16	260	50,000		50,000
Craft Foreman, Maint. Services	1	1	1	3	5	12.02	96.16	365	105,300		105,300
Pipefitter, B-1	11	5	5	21	29	11.92	95.36	365	730,900		730,900
Pipefitter, B-2	2	1	1	4	6	11.92	95.36	365	139,200		139,200
Pipefitter, B-3	3	2	1	6	8	11.92	95.36	365	208,800		208,800
Pipefitter, B-4	3	2	1	6	8	11.92	95.36	365	208,800		208,800
Pipefitter, B-5	3	2	2	7	10	11.92	95.36	365	243,600		243,600
Pipefitter, B-6	1	1	1	3	4	11.92	95.36	365	104,400		104,400
Welder, B-1	3	2	2	7	10	11.92	95.36	365	243,600		243,600
Welder, B-2	1	1	1	2	3	11.92	95.36	365	104,400		69,600
Welder, B-3	1			1	1	11.92	95.36	365	34,800		34,800
Welder, B-4	1	1		2	3	11.92	95.36	365	69,600		69,600
Welder, B-5	1			1	1	11.92	95.36	365	34,800		34,800
Welder, B-6	1			1	1	11.92	95.36	365	34,800		34,800
Machinist, B-1	11	6	5	22	31	11.38	91.04	365	731,100		731,100
Machinist, B-2	2	1		3	4	11.38	91.04	365	99,700		99,700
Machinist, B-3	2	1		3	4	11.38	91.04	365	99,700		99,700

TABLE 3

(Sheet 7 of 10)

PLANT STAFFING TABLE
WAGES & SALARIES FOR MAINTENANCE LABOR AND MAINTENANCE LABOR SUPERVISION

Position	Shift day	Shift aft	Shift ngt	Shifts per day	Total personnel	Wages dollars per manhour	Wages dollars per day	Days per year	Annual cost, dollars	Salaried workers, dollars per year	Total annual cost, dollars
Machinist, B-4	2	1		3	4	11.38	91.04	365	99,700		99,700
Machinist, B-5	2	1		3	4	11.38	91.04	365	99,700		99,700
Machinist, B-6	2			2	3	11.38	91.04	365	66,500		66,500
Electrician, B-1	3	1	1	5	7	11.38	91.04	365	166,100		166,100
Electrician, B-2	1	1		2	3	11.38	91.04	365	66,500		66,500
Electrician, B-3	1	1		2	3	11.38	91.04	365	66,500		66,500
Electrician, B-4	1	1		2	3	11.38	91.04	365	66,500		66,500
Electrician, B-5	1	1		2	3	11.38	91.04	365	66,500		66,500
Electrician, B-6	1	1		2	2	11.38	91.04	260	47,300		47,300
Instrument Mechanic, B-1	9	3	3	15	21	11.38	91.04	365	498,400		498,400
Instrument Mechanic, B-2	2	1		3	4	11.38	91.04	365	99,700		99,700
Instrument Mechanic, B-3	3	2	2	7	10	11.38	91.04	365	232,600		232,600
Instrument Mechanic, B-4	3	2	2	7	10	11.38	91.04	365	232,600		232,600
Instrument Mechanic, B-5	3	2	2	7	10	11.38	91.04	365	232,600		232,600
Instrument Mechanic, B-6	1	1	1	3	4	11.38	91.04	365	99,700		99,700
Laborer or Craft Helper, all Shops	60	25	21	106	148	9.58	76.64	365	2,965,200		2,965,200
General Labor Foreman	4	2	2	8	11	9.68	77.44	365	226,100		226,100
Craft Foreman, Services	2	1		3	4	12.02	96.16	365	105,300		105,300
Carpenter	5			5	5	10.68	85.44	260	111,100		111,100
Insulator/refractory	5			5	5	10.69	85.52	260	111,200		111,200
Painter	10			10	10	10.40	83.20	260	216,300		216,300
Crane Operator	2	1		3	4	10.25	82.00	365	89,800		89,800
Truck Driver	3	1	1	5	7	9.97	79.76	365	145,600		145,600
Sheet Metal Worker	4			4	4	11.38	91.04	260	94,700		94,700
Mason	6			6	6	10.50	84.00	260	131,000		131,000
Utility Repairman	3	2	2	7	10	11.38	91.04	365	232,600		232,600
Garage Supervisor	1			1	1			260		32,000	32,000
Mechanic, Garage	6	2	1	9	13	11.38	91.04	365	299,100		299,100
Secretarial Pool	8			8	8			260		15,000	120,000
Mechanical Engineer	1			1	1			260		36,000	36,000
Chemical Engineer	1			1	1			260		36,000	36,000

TABLE 3 (Sheet 8 of 10)

PLANT STAFFING TABLE
WAGES & SALARIES FOR MAINTENANCE LABOR AND MAINTENANCE LABOR SUPERVISION

Position	Shift day	aft	ngt	Shifts per day	Total personnel	Wages dollars per manhour	Wages dollars per day	Days per year	Annual cost, dollars	Salaried workers, dollars per year	Total annual cost, dollars
Planner & Scheduler	2			2	2			260		30,000	60,000
Coordinator	2			1	1			260		32,000	32,000
Warehouse Supervisor	1			1	1			260		28,000	28,000
Records Supervisor	1			1	1			260		24,000	24,000
Records Clerk	2			2	2			260		14,000	28,000
Warehouseman	6	2	2	10	14	10.50	84.00	365	306,600		306,600
Laundry	8			8	8	8.40	67.20	260	139,800		139,800
SUBTOTAL					523				11,065,100		12,069,300
PAYROLL OVERHEAD @ 24%											2,896,600
TOTAL MAINTENANCE LABOR & SUPERVISION											14,965,900

TABLE 3

(Sheet 9 of 10)

PLANT STAFFING TABLE
CONTRACT MAINTENANCE COSTS

Division and Personnel	Shift day	Shift aft	Shift ngt	Shifts per day	Total personnel	Wages dollars per manhour	Wages dollars per day	Days per year	Annual cost, dollars	Salaried workers, dollars per year	Total annual cost, dollars
Maintenance Superintendent*	2			2	2			260		48,000	96,000
Pipefitter Foreman*	3	2	2	7	9	18.83**	150.64	365	384,900		384,900
Pipefitter*	21	11	11	43	60	18.08**	144.64	365	2,270,100		2,270,100
Boilermaker Foreman*	2	1		3	5	18.265**	146.12	365	160,000		160,000
Boilermaker*	10	6	5	21	30	17.015**	136.12	365	1,043,400		1,043,400
Millwright Foreman*	1	1		2	3	16.05**	128.40	365	93,700		93,700
Millwright*	7	4	3	14	20	15.45**	123.60	365	631,600		631,600
Electrical Foreman*	1			1	2	18.87**	150.96	365	55,100		55,100
Electrician*	4	2	1	7	10	17.78**	142.24	365	363,400		363,400
Insulator Foreman*	4	2	2	8	10	17.32**	138.56	365	404,600		404,600
Insulator*	30	12	11	53	75	16.82**	134.56	365	2,603,100		2,603,100
Crane Operator*	2	1		3	4	14.73**	117.84	365	129,000		129,000
Teamster*	2	1		3	4	11.62**	92.96	365	101,800		101,800
Labor Foreman*	3	1	1	5	7	11.28**	90.24	365	164,700		164,700
Laborer*	18	8	7	33	47	10.78**	86.24	365	1,038,800		1,038,800
Carpenter Foreman*	1			1	2	14.28**	114.24	365	41,700		41,700
Carpenter*	3	2	1	7	10	13.78**	110.24	365	281,700		281,700
SUBTOTAL					300				9,767,600		9,863,600
OVERHEAD & PROFIT @ 15% OF SALARIES & WAGES											1,479,500
TOTAL CONTRACT MAINTENANCE COST											11,343,100

* Estimated average contract Maintenance Force

**Wages, dollars per manhour, includes fringe benefits

TABLE 3 (Sheet 10 of 10)

PLANT STAFFING TABLE
WAGES AND SALARIES FOR OPERATING LABOR & SUPERVISION

Position	Shift day	Shift aft	Shift ngt	Shifts per day	Total personnel	Wages dollars per manhour	Wages dollars per day	Days per year	Annual cost, dollars	Salaried workers, dollars per year	Total annual cost, dollars
Director of Operations	1			1	1					65,000	65,000
Secretary	1			1	1					18,000	18,000
Area Superintendent, Day	5			5	5					56,000	280,000
Area Chemical Engineer	5			5	5					45,000	225,000
Night Superintendent		1	2	3	5					56,000	280,000
Shift Superintendent, Area	6	6	6	18	25					42,000	1,050,000
Secretary	1			1	1					16,000	16,000
A Operator	14	8	8	30	42	12.19	97.52	365	1,067,800		1,067,800
B Operator	31	19	19	69	97	11.49	91.92	365	2,315,000		2,315,000
C Operator	46	21	21	88	122	10.91	87.28	365	2,803,400		2,803,400
D Operator	28	16	15	59	83	10.50	84.00	365	1,808,900		1,808,900
Extra Board	13	7	7	27	38	9.75	78.00	365	768,700		768,700
SUBTOTAL					425				8,763,800		10,697,800
PAYROLL OVERHEAD @ 24%											2,567,500
TOTAL OPERATING LABOR AND SUPERVISION COSTS											13,265,300

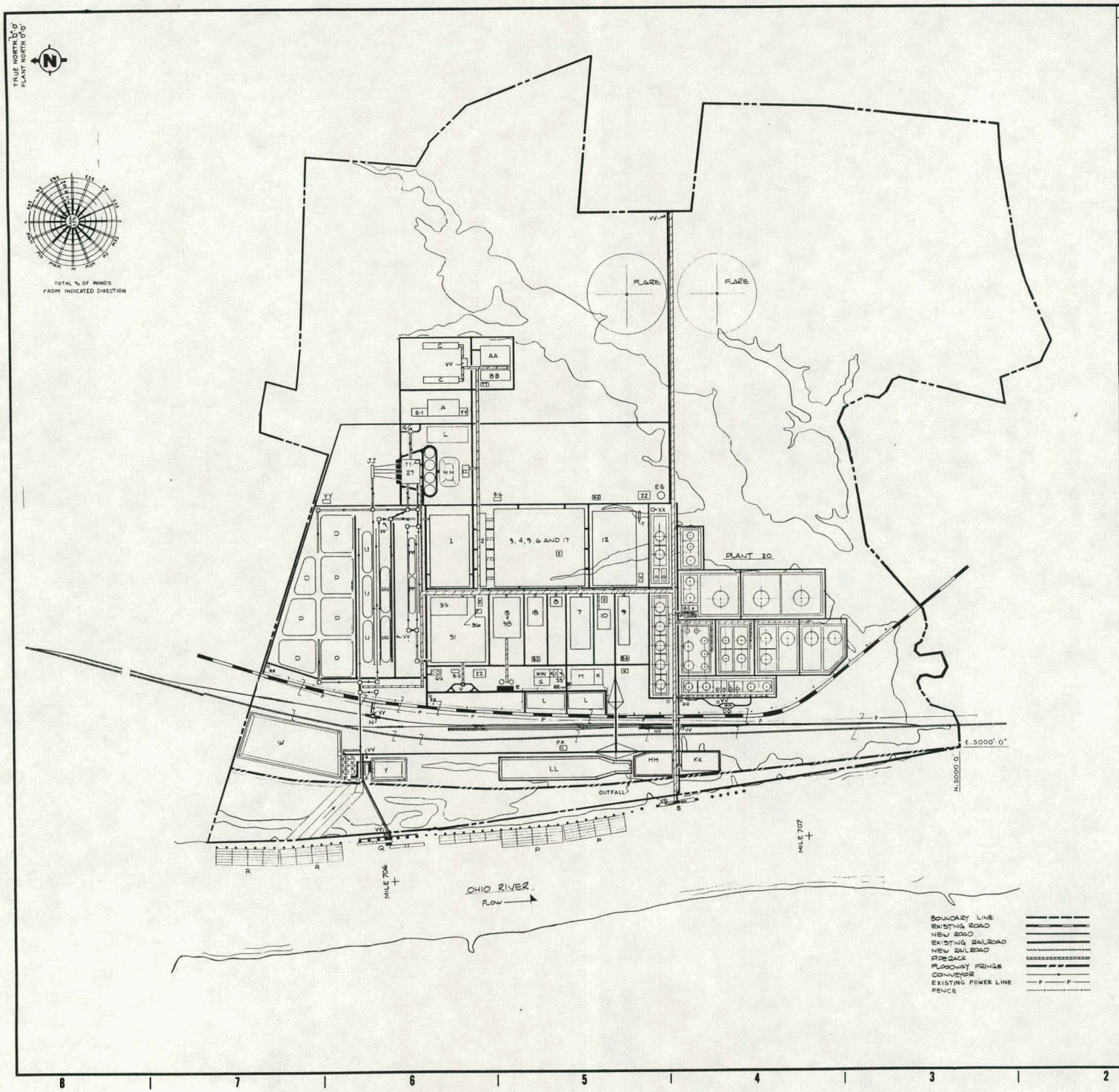

LEGEND

1. COAL DRYING AND PULVERIZING
2. COAL SLURRY PREPARATION
3. H-COAL PREHEATING AND REACTION
4. H-COAL PRIMARY SEPARATION
5. H-COAL RECYCLE SLURRY PREPARATION
6. H-COAL RECYCLE HYDROGEN CONCENTRATION AND COMPRESSION
7. GAS PLANT
8. CRYOGENIC HYDROGEN PURIFICATION
9. SOUR WATER TREATING
10. SULFUR PLANT
12. GASIFICATION AND PURIFICATION
15. OXYGEN PLANT
17. DISTILLATE SEPARATION
18. NAPHTHA TREATING AND REFORMING
20. TANKAGE
21. INTERCONNECTING PIPING (PIPERACKS)
22. RIVER LOADING FACILITIES
25. RAIL AND TRUCK LOADING
26. COAL RECEIVING AND STORAGE
27. COAL WASHING AND SECONDARY CRUSHING
31. STEAM GENERATION AND B.F.W. TREATING
32. WATER SYSTEM
33. FIRE SYSTEM
34. WASTE WATER TREATMENT PLANTS
35. STACK GAS SCRUBBING
36. INSTRUMENT AIR AND PLANT AIR SYSTEM
38. INERT GAS SYSTEM
39. PURGE AND FLUSH OIL SYSTEM
42. WASTE SLUDGE INCINERATOR.

A. WAREHOUSE
B-H. THRU B-16 MAINTENANCE BUILDINGS
C. COOLING TOWERS (PLT 32)
D. DEAD COAL (PLT. 26)
E. LIQUID OXYGEN AND NITROGEN UNLOADING
F. WATER INTAKE
G. CHANGE HOUSE
H. FIRE STATION
J. FIRST AID STATION
K. CAFETERIA
L. PARKING
M. ADMINISTRATION
N. RAILROAD COAL UNLOADING (PLT. 26)
P. FULL BARGES, 24 BARGE TOW (PLT. 22)
Q. COAL UNLOADING DOCK (PLT. 22)
R. EMPTY BARGES, 24 BARGE TOW (PLT 22)
S. LIQUID LOADING DOCK (PLT 22)
T. SWITCH GEAR | ZZ SUBSTATION
U. RAW COAL (PLT 26)
V. FLY ASH UNLOADING AREA (PLT. 31)
W. RAW WATER POND
X. CSP RUNOFF TREATING AREA (PLT 34)
Y. COAL STORAGE PILES (CSP) RUNOFF POND (PLT. 34)
Z. CONTROL ROOM
AA. COOLING TOWER SOFTENING AND FILTRATION (PLT 32)
BB. WASTE WATER CONCENTRATION AND EVAPORATION SYSTEM (PLT 34)
CC. ASH HANDLING. (PLT. 31)
DD. TANK TRUCK LOADING (PLT. 23)
EE. FIRE WATER TANK (PLT. 33)
FF. SANITARY SEWAGE TREATMENT PLANT (PLT 34)
GG. REFUSE BUNKER (PLT 27)
HH. EMERGENCY POND (PLT. 27)
JJ. PLANT FEED BUNKER (PLT. 26)
KK. POST TREATMENT OF STRIPPED SOUR WATER (PLT 34)
LL. OILY WATER SURGE POND (PLT 34)
MM. OILY WATER TREATMENT (PLT 34)
NN. CLEAN COAL STORAGE (PLT 26)
PP. BOILER FUEL STORAGE (PLT 26)
QQ. SUMP AND TANK FOR INCINERATOR (PLT 42)
RR. GATE HOUSE
SS. GUARD/SECURITY HOUSE
TT. OPERATING EQUIPMENT ROOM
UU. RAIL LOADING (PLT. 23)
VV. OPERATOR SHELTER
WW. LABORATORY
XX. SPECIAL CLEANING
YY. GARAGE

NOTES

1. SITE COORDINATES N.5000'.0' E.5000'.0' ARE ESTABLISHED AT THE MOUTH OF TOWN CREEK AT THE INTERSECTION OF THE WATER LINE OF THE OHIO RIVER. (1) REFERENCE: COMMONWEALTH LAND TITLE INSURANCE COMPANY PHILADELPHIA, PENNSYLVANIA FILE No. E-055282.
2. HIGH POINT OF FINISHED GRADE ELEVATION 100'.0' EQUALS ELEVATION 415'.0' ABOVE M.S.L.
3. NORMAL WATER ELEVATION OF OHIO RIVER IS EL. 382.3' AT RIVER MILE 706.
4. MEAN HIGHWAY ELEVATION IS EL. 415'.0'
5. TOP OF RAILROAD BALLAST EL. IS 415'.0'

REFERENCE DRAWINGS

50E-A-4 INDEX DRAWING
50E-A-6 CONSTRUCTION REQUIREMENT STUDY

0 200 400 600 800 1000
1"=400'.0"
GRAPHIC SCALE

NO.	DATE	REVISIONS	BY	CHK	RVW	ENG'R	DI APR	ASST. APR.
1	12/21/81	ISSUED FOR PHASE ZERO	P.P.	JK	JK	HS		
2	2/4/82	ISSUED FOR REVIEW AND APPROVAL	R	JK	JK	AKF JK		

SCALE 1"=400' DESIGNED J. KUTLIK DRAWN T. ROBERTSON

ASHLAND SYNTHETIC FUELS, INC.
AMCO ENERGY COMPANY, INC.

U.S. DEPARTMENT OF ENERGY
COOPERATIVE AGREEMENT
NO. DE-FC05-80PR27117

BRECKINRIDGE PROJECT

BRECKINRIDGE COUNTY — PHASE ZERO — KENTUCKY

OVERALL SITE PLAN

HOUSTON

JOB NO.	DRAWING NO.	REV.
14222	50E-A-1	1

34 X 44 "E" SIZE

225

Electric Power Summary

3.0 ELECTRIC POWER SUMMARY

The Phase Zero effort on the Breckinridge Project is based on a point design for a nominal liquid fuels production of 53,000 barrels per day. Based on this point design, flow sheets and data sheets were issued in the normal manner expected for a project of this kind. A reliability study was made for the entire plant to determine an average yearly production of products. As would be expected because of equipment outage in certain areas, the overall average stream factor based on a nominal capacity of 53,000 barrels per day is below 1.0; it is approximately 0.87. Because of outages, factors must be applied to the utilities consumed and/or generated in various areas to account for reduced utility consumption due to reduced throughput on some equipment.

Except for Plant 15, which is a special case because of the dependence of some of its drivers on steam generated in Plant 31, the factors applied to the utility consumption and/or generation represent only those changes due to a stream factor less than 1.0. Reduction of utility consumption equipment due to the normal contingency allowance placed on data sheet specifications has already been dealt with in each plant's base electrical power requirement. Because of this work, it is felt that the figure of 169,313 KW in Table 4 represents a true yearly average utility consumption.

3.1 PLANT 1, COAL DRYING AND PULVERIZING

In Plant 1, coal from the Coal Washing (Plant 27), is dried, pulverized, and made ready for Coal Slurry Preparation (Plant 2). The dominant electrical power consumers in Plant 1 are the pulverizers and exhaust fans. Eight directly coupled trains of equipment are provided in this plant. Any six of these trains operating at rated capacity can supply the facility's coal requirements. The electrical consumption is

proportional to coal throughput with some nonlinearity introduced by having to start and operate equipment after equipment failures. The average coal throughput in the plant is 0.887 of design. The electrical power consumption factor is 0.935 of design power consumption.

3.2 PLANT 2, COAL SLURRY PREPARATION

In Plant 2, pulverized coal is processed into a coal/oil slurry which is hydrogenated in downstream units. Most of the electrical users in this plant are mixers and pumps with recycle. These users will operate continuously at their rated capacity because their function is not dependent on throughput. Therefore, the overall factor for this plant based on the point design factor of 53,000 BPD is 1.0.

3.3 PLANT 3, H-COAL® PREHEATING AND REACTION

In Plant 3, the coal/oil slurry prepared in Plant 2 is heated and hydrogenated. The dominant electrical consumers are the reactor feed pumps which pump the slurry to the reactor pressure. The pumps are variable speed reciprocating pumps with a hydraulic transmission driven by a constant speed motor. There is no reduction in electrical power with reduced pumping rate. The only reduction in power consumption is due to the unavailability of a train of the reaction system or outage of downstream fractionation Plants 5 and 17. Based on this criteria, the stream factor is 0.87. Because much of the downtime associated with this equipment encompasses time of starting and stopping the equipment (at which time the feed pumps are operated on flush oil or start-up oil), an allowance of 0.05 should be added to the plant stream factor to account for running the equipment during start-up and shutdown of the plant. Thus, the overall factor for the electrical consumption is 0.92.

3.4 PLANT 4, H-COAL® PRIMARY SEPARATION

With the exception that Plant 4 has a large amount of electrical consumption in air coolers, the reasoning of identifying the Plant 4 factor is

the same as Plant 3. These "fin-fans" have variable louvers that vary the flow rate through the fans and thereby vary the power consumption. It is estimated that this effect reduces the electrical consumption for all of Plant 4 by a factor of 0.05. Therefore, the overall factor for the electrical consumption in Plant 4 is 0.05 less than Plant 3 or 0.87.

3.5 PLANT 5, H-COAL® RECYCLE SLURRY PREPARATION

The equipment in this plant performs a crude separation of the reactor's liquid products. Most of the electrical users are pumps and more specifically slurry pumps. The drives to these pumps use a constant amount of power independent of the throughput. Therefore, the only reduction in the electric power that has been identified is that associated with the downtime in Plants 5 and 17 which is 0.03. The stream factor for the Plant 5 equipment and the associated electrical consumption factor is 0.97.

3.6 PLANT 6, H-COAL® RECYCLE HYDROGEN COMPRESSION

Plant 6 electrical users are dominated by the recycle gas compressors. These machines are reciprocating compressors with unloaders able to unload the machine to approximately 0%, 25%, 50%, 75% and 100% of load. Because of these unloaders, it is anticipated that the power consumption of these machines is proportional to throughput. When one considers the mechanical losses when the compressor is operated in the unloaded conditions, it would be expected that the electrical consumption factor would be slightly higher than the throughput. We estimate the average throughput to be 0.87 of the point design and the power consumption to be 0.885.

3.7 PLANT 7, GAS PLANT

In Plant 7, electrical power is generated and consumed. Electrical power is generated by letting down 3,000 psig purge gas from Plant 3 to 700 psig through a gas turbine. It is assumed the power generated is proportional to the flow through the turbine.

The power generated would be equal to the purge gas flow rate minus the anticipated downtime of the turbine. It is anticipated the turbine downtime is 1.5% and the purge flow rate is 0.87 of the point design flow rate. Therefore, the overall factor for the power generated is 0.855 of the point design.

The large consumers in Plant 7 are the feed gas and propane refrigeration compressors. These machines will experience some reduction in power consumption with throughput. The anticipated throughput due to outages in other plants is estimated to be 87% of design. A factor of 0.935 was used on this plant to reflect the nonlinear turndown expected in plant equipment such as compressors and pumps.

3.8 PLANT 8, CRYOGENIC HYDROGEN PURIFICATION

Almost all of the electrical usage in Plant 8 is by compressors used to recompress the products to their usage pressure. These compressors are large multi-stage centrifugal compressors. The power consumption of these machines should be approximately proportional to throughput with a factor slightly higher than the throughput due to a lower compression efficiency at reduced throughput. The anticipated flow is 87% of the design and the electrical power factor is 0.885.

3.9 PLANT 9, SOUR WATER TREATING

Plant 9 consists of the sour water stripper, the PHOSAM-W® process licensed from United States Steel Corporation, and phenol extraction licensed from Jones and Laughlin Steel Corporation. Most of the electrical users are small pumps. These pumps will have some electrical power reduction with reduced throughput but this reduction will not be linear. The amount of reduction would depend on the pump characteristics. The plant throughput will be 87% of design based on the stream factors in other parts of the total H-Coal® facility. Based on this throughput, the electrical power usage is 0.92 of design.

3.10 PLANT 10, SULFUR PLANT

Plant 10 consists of three Claus Sulfur Plants. These plants use very little electrical power. Because of this, a power consumption factor of 1.0 of design is used.

3.11 PLANT 12, GASIFICATION AND PURIFICATION

Plant 12 consists of the Texaco Partial Oxidation Unit, the shift section, the Selexol Unit and the hydrogen compressors. The electrical power consumption is dominated by the hydrogen compressors. There are five compressors each of which has suction unloaders with unloading to 25%, 50%, 75% and 0% of capacity. Since these machines are manifolded on the suction and discharge, this unloading affords almost straight line turndown of flow and power consumption. The flow rate through Plant 12 is 87% of the design flow rate. The power consumption factor is 0.87.

3.12 PLANT 15, OXYGEN PLANT

The Oxygen Plant output is dependent to a large extent on the steam output from Steam Generation and Boiler Feedwater Treating (Plant 31). There are three trains in the Oxygen Plant. The main compressors (air compressor and oxygen compressor) in two of the trains are driven by steam turbines and in one train by electric motors. In Plant 31 four boilers are provided, any three of which can supply enough steam for the facility. If only two boilers should be available, the steam will be brought into balance by shutting down the one train in the Oxygen Plant operating on steam.

The average daily consumption of oxygen is 4,250 tons per day (TPD). When the facility product output is at the rated capacity of 53,000 BPSD, the oxygen demand is 4,850 TPD. The total rated capacity of three oxygen trains is 5,000 TPD. It is obvious by glancing at the above numbers that for extended periods of time the Oxygen Plant will be capable of producing more oxygen than demanded. The plant is capable of producing a

certain amount of liquid oxygen for storage during this time, but for the most part one or more of the oxygen trains will be operated at reduced throughput.

Steam is generated in Plant 31 with coal middlings from Coal Washing (Plant 27). Because the middlings produced have to be burned in the boilers or trucked to landfill, the incremental cost of generating steam is low at times when boiler capacity is available. Therefore, when cutting back the oxygen production, it makes sense to maintain those trains with steam drivers at rated capacity and reduce the throughput of the train with electric motor drives.

The design of the Oxygen Plant is based on severe summer conditions of 96°F dry bulb temperature and 78°F wet bulb temperature. The yearly average conditions are somewhat below these temperatures. Even on hot summer days, the evening and early morning temperatures are not as severe as these design temperatures. Most of the electrical power in Plant 15 is consumed by the large compressors. When a gas is compressed, the ideal theoretical horsepower is directly proportional to the absolute temperature of the gas at the inlet to each stage of the compressor. Because of this, a factor must be applied to the design power consumption to account for cooler average ambient conditions.

Because of the uniqueness of the power users in Plant 15 and their integration into the overall project, the power consumption in Plant 15 is analyzed in detail. Factors such as availability of steam, plant turndown, and cooler average ambient temperatures, along with steam availability, are incorporated into the base case power consumption. The power consumption factor, due to the reduced throughput, is in addition to these other factors. The average oxygen production is 4,250 TPD plus approximately 200 TPD over the fence sales. The rated plant capacity is 5,000 TPD. The turndown of the large compressors is almost linear with flow. Therefore, the power consumption factor is 0.9.

3.13 PLANT 17, H-COAL® DISTILLATE SEPARATION

Plant 17 consists of two trains of distillation equipment including distillation columns, strippers, reboilers, and condensers. The electrical power consumption is rather evenly distributed between fans, pumps and compressors. It is anticipated that the distillation and stripper columns will be operated in such a manner as to maintain constant liquid and vapor flow rates inside the columns. Because of this operating constraint, the electrical power consumption will not vary appreciably with throughput. There will be a reduction of power consumption from the design power consumption at design throughput due to outages in Plant 17 itself and due to ambient temperatures lower than design.

Fin-fan heat exchangers are used for process cooling in Plant 17. These fans are equipped with variable louvers and winterizing to prevent overcooling. The project is designed for a hot summer day of 96°F. When the ambient temperature drops substantially below this temperature, less air will be required to do the same amount of cooling. A power consumption factor of 0.92 is used to account for the combined fin-fan, downtime and reduced throughput effects.

3.14 PLANT 18, NAPHTHA HYDROTREATING AND REFORMING

Plant 18 consists of the naphtha hydrotreater and platformer. The design of the equipment is based on a proprietary UOP process. The electrical power consumption is directly proportional to throughput. The power consumption is increased slightly from the average throughput of 88.7% to account for inefficiency on turndown. The electrical power consumption factor is 0.902 for Plant 18.

3.15 PLANT 19, FLARE SYSTEM

The electrical power consumption of this system is not dependent on the throughput in the rest of the plant. This system must operate all the time. The power consumption factor for this plant is 1.0.

3.16 PLANT 20, TANKAGE

Plant 20 electrical users consist of loading pumps, mixers, and compressors. As expected, the electrical power consumption of the loading pumps and associated equipment is directly proportional to the throughput of the equipment. The compressors in this plant are refrigeration compressors or vent gas compressors.

Mixers are used to keep different products in suspension or to avoid localized overheating. Both the mixers and compressors will be operated continuously at the design capacity. When the electrical consumers in each category are weighted appropriately, the electrical consumption factor for Plant 20 is 0.93 of design.

3.17 PLANT 21, INTERCONNECTING PIPING

There are no electrical consumers in Plant 21.

3.18 PLANT 22, RIVER FACILITIES

The electrical consumption in Plant 22 is minimal and constant. Therefore, the electrical consumption factor is 1.0.

3.19 PLANT 23, RAIL, TRUCK, PIPELINE

The electrical consumption in Plant 23 is minimal and constant. Therefore, the electrical consumption factor is 1.0.

3.20 PLANT 26, COAL RECEIVING AND STORAGE

The electrical consumption for Plant 26 is approximately proportional to throughput. A small allowance is made to account for inefficiencies associated with turndown. The electrical power consumption factor for Plant 26 is 0.887.

3.21 PLANT 27, COAL WASHING

The electrical power consumptions for Plant 27 is approximately proportional to throughput. In addition to the same allowance for inefficiencies placed on Plant 26, an allowance of 3% was added to Plant 27 to make allowances for idling the plant on standby, when no coal is being processed. The electrical power consumption factor is 0.917 for Plant 27.

3.22 PLANT 30, ELECTRICAL DISTRIBUTION

Three percent is added to the electrical power consumption to account for losses in the distribution system.

3.23 PLANT 31, STEAM GENERATION AND BOILER FEEDWATER TREATING

Plant 31 consists of four trains of boilers and associated BFW treating. Any three boilers operating at their rated capacity can supply the required steam for the plant. The availability of any one boiler is estimated to be approximately 90%. Based on this and the total steam requirement, the average throughput of each boiler is 72%. The power consumption in Plant 31 is directly proportional to throughput; the yearly average power consumption as a fraction of the design power consumption is 4/3 times 0.72 or 0.96.

3.24 PLANT 32, WATER SYSTEMS: RAW, POTABLE, COOLING

The electrical users in Plant 32 are dominated by those associated with the cooling water system. During outages or reduced throughput in the process, the cooling water will continue to circulate through the equipment at the design rate so as to prevent fouling or freezing problems.

A reduction in fan horsepower due to ambient temperatures lower than design is taken into account in the base power consumption. Because the cooling water flow rate remains constant in Plant 32, the power consumption in this plant remains constant and the consumption factor is 1.0.

3.25 PLANT 33, FIRE SYSTEMS

The electrical consumption in Plant 33 on a yearly average basis is minimal and independent of plant throughput. The power consumption factor for Plant 33 is 1.0.

3.26 PLANT 34, SEWERS AND WASTEWATER TREATMENT

The water that is processed through Plant 34 comes from two different sources: process water and other water. Process water is sour water or oily water that has been in contact or contaminated by the process fluids. Water from other sources includes coal pile runoff, treated sewage, rainwater, etc. This water will be retained and processed over a period of time. The power consumption for processing each type of water is about equal. It is assumed the power consumption is approximately directly proportional to throughput. The water processed other than process water is an allocation rather than a quantifiable quantity. Therefore, it is treated as a constant and has a power consumption factor of 1.0. The process water comes from Plant 9 where it is pretreated to recover ammonia and phenols. The part of Plant 34 that processes this water has the same operating factor as Plant 9. This power consumption factor is 0.92. These two factors are averaged and the overall power consumption factor for Plant 34 is 0.96.

3.27 PLANT 35, STACK GAS SCRUBBING

Plant 35 consists of the stack gas scrubbing associated with the steam generation in Plant 31. Each plant has four trains directly coupled. Each train consists of a boiler and its associated flue gas desulfurization scrubber. In addition, each plant has associated equipment that is

not directly coupled but shared between a number of trains. The power consumption factor for the equipment in the scrubbing section of Plant 35 will be the same as that for Plant 31, 0.96. To this, 0.04 is added to account for the time this equipment is operated on start-up before actually receiving gas and for the fact that the equipment, other than that associated with scrubbing, will have to operate in a standby mode. The overall power consumption factor for Plant 35 is 1.0.

3.28 PLANT 36, INSTRUMENT AND PLANT AIR SYSTEMS

The electrical power consumers in Plant 36 consist of three centrifugal 50% instrument air compressors and two dryer packages. The system is generously sized so that two of the compressors can easily supply the air requirements. Most of the time, the compressors are turned back as much as possible to reduce power consumption. The compressors are of a small centrifugal type. A reduction in power consumption to 90% of design for turndown may be all that can be attained in such equipment. Therefore, the power consumption factor is 0.9.

3.29 PLANT 37, COMMUNICATION SYSTEM

The electrical consumption in Plant 37 is minimal and constant. Therefore, the electrical power consumption factor is 1.0.

3.30 PLANT 38, INERT GAS SYSTEMS

Plant 38 compresses nitrogen to be used in Plant 1 and Plant 7 with most of the electrical power consumed in Plant 38 being used to supply nitrogen to Plant 7. Because of this, the same power consumption factor assigned to Plant 7 is assigned to Plant 38. This factor is 0.935.

3.31 PLANT 39, PURGE AND FLUSH OIL SYSTEMS

Plant 39 supplies flush oil to the main plant to purge lines and vessels of slurry and to flush slurry pump seals. The system consists mostly of

pumps and heaters. Since the system either has to constantly be used or be on hot standby, the power consumption in the system is constant. The electrical power consumption factor is 1.0.

3.32 PLANT 41, BUILDINGS

Plant 41 electrical power consumers are dominated by lighting, heating and air conditioning. The electrical consumption is based on the square footage of the buildings. Therefore, this number although it may vary during the year can be considered a constant on a yearly average basis. The electrical power consumption factor is 1.0.

3.33 PLANT 42, SOLID WASTE MANAGEMENT

The electrical power consumption in Plant 42 is minimal and constant. The electrical power consumption factor is 1.0.

3.34 PLANT 43, SETTLING PONDS

There are no electrical consumers in Plant 43.

3.35 PLANT 44, LANDFILL

The electrical power consumption in Plant 44 is minimal and constant. Therefore, the electrical power consumption factor is 1.0.

3.36 OVERALL PLANT LIGHTING

The plant area will be illuminated with lighting controlled with photoelectric switches. The amount of lighting required and the amount of time per year the lighting is to be used is calculated using sound engineering practices. Therefore, on a yearly average basis, the electrical power consumption can be considered a constant. The electrical power consumption factor is 1.0.

Tables 4 and 5 are summaries of the electrical generation and consumption for each plant. Table 6 is a detailed breakdown of the electrical users in each plant.

TABLE 4

ELECTRICAL POWER SUMMARY FOR DESIGN RATE AND PROJECTED ACTUAL RATE

PLANT NO.	PLANT NAME	POWER GENERATION, KW			POWER CONSUMPTION, KW				
		DESIGN RATE 52349 BPSD	ADJUSTED FACTOR FOR PROJECTED RATE	PROJECTED ACTUAL RATE, 46334 BPSD	DESIGN RATE(1) 52349 BPSD		ADJUSTED FACTOR FOR PROJECTED RATE	PROJECTED ACTUAL(2) RATE, 46334 BPCD	
					GROSS(3)	NET(4)		GROSS(5)	NET(6)
1	Coal Drying & Pulverizing	-	-	-	18,632	18,632	0.935	17,421	17,421
2	Coal Slurry Preparation	-	-	-	1,638	1,638	1.0	1,638	1,638
3	H -Coal 'R' Reheating & Reaction	-	-	-	18,249	18,249	0.92	16,789	16,789
4	H-Coal 'R' Primary Separation	-	-	-	6,335	6,335	0.87	5,511	5,511
5	H-Coal 'R' Recycle Slurry Preparation	-	-	-	2,730	2,730	0.97	2,648	2,648
6	H-Coal 'R' Recycle Hydrogen Concentration & Compression	-	-	-	6,783	6,783	0.885	6,003	6,003
7	Gas Plant	8,079	0.855	6,908	7,034	-1,045(7)	0.935	6,577	-331(7)
8	Cryogenic Hydrogen Purification	-	-	-	14,867	14,867	0.885	13,157	13,157
9	Sour Water & Ammonia	-	-	-	531	531	0.92	488	488
10	Sulfur Plant	-	-	-	10	10	1.0	10	10
12	Gasification & Purification	5,128	0.855	4,384	60,590	55,462	0.87	52,713	48,329
15	Oxygen Plant	1,278	1.0	1,278	34,742	33,464	0.90	31,396	30,118
17	Distillate Separation	-	-	-	3,374	3,374	0.92	3,104	3,104
18	Naphtha Treating & Reforming	-	-	-	5,704	5,704	0.885	5,048	5,048
19	Flare System	-	-	-	18	18	1.0	18	18
20	Tankage	-	-	-	1,885	1,885	0.938	1,768	1,768
21	Interconnecting Piping	-	-	-	-	-	-	-	-
22	River Facility	-	-	-	1	1	1.0	1	1

TABLE 4 (Continued)

PLANT NO.	PLANT NAME	POWER GENERATION, KW			POWER CONSUMPTION, KW				
		DESIGN RATE 52349 BPSD	ADJUSTED FACTOR FOR PROJECTED RATE	PROJECTED ACTUAL RATE, 46334 BPCD	DESIGN RATE(1) 53249 BPSD		ADJUSTED FACTOR FOR PROJECTED RATE	PROJECTED ACTUAL(2) RATE, 46334 BPCD	
					GROSS(3)	NET(4)		GROSS(5)	NET(6)
23	Rail, Truck, Pipeline	-	-	-	27	27	1.0	27	27
26	Run of Mine Coal Receiv--ing & Bulk Storage	-	-	-	3,056	3,056	0.887	2,711	2,711
27	Coal Washing & Secondary Crushing	-	-	-	5,318	5,318	0.917	4,877	4,877
31	Steam Generation & BFW Treating	36,964	0.92	34,007	5,288	-31,676(7)	0.96	5,076	-28,931(7)
32	Water Systems, Raw, Portable, CW	-	-	-	14,520	14,520	1.0	14,520	14,520
33	Fire Systems	-	-	-	45	45	1.0	45	45
34	Sewers & Waste Treatment	-	-	-	7,294	7,294	0.96	7,002	7,002
35	Stack Gas Scrubbing	-	-	-	4,554	4,554	0.96	4,372	4,372
36	Instrument Air & Plant Air System	-	-	-	1,526	1,526	0.9	1,373	1,373
37	Communications System	-	-	-	13	13	1.0	13	13
38	Innert Gas Systems	-	-	-	1,386	1,386	0.935	1,296	1,296
39	Purge & Flush Oil Systems	-	-	-	400	400	1.0	400	400
41	Buildings	-	-	-	2,614	2,614	1.0	2,614	2,614
42	Solid Waste Management	-	-	-	230	230	1.0	230	230
43	Settling Ponds	-	-	-	-	-	-	-	-
44	Landfill	-	-	-	47	47	1.0	47	47
Overall Plant Lighting		-	-	-	2,066	2,066	1.0	2,066	2,066
Total Excluding Distribution Losses		51,449		46,577	231,501	180,058		210,959	164,382
Distribution Losses (3% of the Net)					5,402				4,931
Total Net Electrical Power Consumption					185,460				169,313

TABLE 4 (Continued)

NOTES:

(1) The design rate for Cat products corresponding to a dry coal feed rate of 16,500 tons/day.

(2) Equivalent to 88.7% of the design rate mentioned above.

(3) Total electrical consumption for the design rate.

(4) Total electrical consumption minus electrical generation for the design rate.

(5) Total electrical consumption for the projected actual rate.

(6) Total electrical consumption minus electrical generation for the projected actual rate.

(7) Negative numbers represent electrical generation.

TABLE 5

NET ELECTRICAL POWER CONSUMPTIONS FOR DESIGN RATE AND PROJECTED ACTUAL RATE

PLANT NO.	PLANT NAME	DESIGN RATE, 52349BPSD(1)	PROJECTED ACTUAL RATE, 46334BPCD(2)	PLANT NO.	PLANT NAME	DESIGN RATE, 52349BPSD(1)	PROJECTED ACTUAL RATE, 46334BPCD(2)
1	Coal Drying & Pulverizing	18,632	17,421	26	Run of Mine Coal & Bulk Storage	3,056	2,711
2	Coal Slurry Preparation	1,638	1,638	27	Coal Washing & Secondary Crushing	5,318	4,877
3	H-Coal(R) Preheating & Reaction	18,249	16,789	31	Steam Generation & BFN Treating	-31,676(3)	-28,931(3)
4	H-Coal(R) Primary Separation	6,335	5,511	32	Water Systems, Raw, Portable, CW	14,520	14,520
5	H-Coal(R) Recycle Slurry Preparation	2,730	2,648	33	Fire Systems	45	45
6	H-Coal(R) Recycle Hydrogen Compression	6,783	6,003	34	Sewers & Waste Treatment	7,294	7,002
7	Gas Plant	-1,045(3)	-331(3)	35	Stack Gas Scrubbing	4,554	4,372
8	Cryogenic Hydrogen Purification	14,867	13,157	36	Instrument Air & Plant Air System	1,526	1,373
9	Sour Water & Ammonia	531	488	37	Communication System	13	13
10	Sulfur Plant	10	10	38	Innert Gas Systems	1,386	1,296
12	Gasification & Purification	55,462	48,329	39	Purge & Flush Oil Systems	400	400
15	Oxygen Plant	33,464	30,118	41	Buildings	2,614	2,614
17	Distillate Separation	3,374	3,104	42	Solid Waste Treatment	230	230
18	Naphtha Treating & Reforming	5,704	5,048	43	Settling Ponds	-	-
19	Flare System	18	18	44	Landfill	47	47
20	Tankage	1,885	1,768		Overall Plant Lighting	2,066	2,066
21	Interconnecting Piping	-	-		Total Power in Service	180,058	164,382
22	River Facility	1	1		Electrical Distribution Loss(4)	5,402	4,931
23	Rail, Truck, Pipeline	27	27		Overall Net Power Consumption	185,460	169,313

NOTES: (1) The design rate for C_3 + products corresponding to a dry coal feed of 16,500 tons/day.

(2) Equivalent to 88.7% of the design rate mentioned above.

(3) The negative numbers represent net power generation.

(4) Estimated at 3% of total power in service.

TABLE 6

ELECTRICAL SUMMARY

PLANT 1

CONSUMED

ITEM NO.	SERVICE	OPERATING[1] BHP/EACH	CONNECTED HP EACH	CONNECTED HP TOTAL	MOTOR[2] EFF. %	OPERATING KW/EACH	ON-STREAM[3] FACTOR	AVERAGE OP. KW EACH	AVERAGE OP. KW TOTAL
1F-101A thru F	Combustors (start-up Liquid Fuel Pumps)	51	60	360	90	42	0.05	2	12
1F-101G, H	" "	51	60	120	90	42	0.0	0	0
1F-102A thru F	Combustor Air Fans	51	60	360	90	42	1.0	42	252
1F-102G, H	"	51	60	120	90	42	0.0	0	0
1F-103A thru F	Main Fan Damper	17	20	120	86	14	1.0	14	84
1F-103G, H	"	17	20	40	86	14	0.0	0	0
1F-104A thru F	Vent Damper	4.3	5	30	84	4	1.0	4	24
1F-104G, H	"	4.3	5	10	84	4	0.0	0	0
1K-101A thru F	Main Exhauster	1,700.0	2,000	12,000	95	1,335	1.0	1,335	8,010
1K-101G, H	"	1,700.0	5	10	95	1,335	1.0	0	0
1K-102A thru G	Seal Oil Fan	21.3	25	150	88	18	1.0	18	108
1K-102G, H	"	21.3	25	50	88	18	0.0	0	0
1K-104A thru C	Return Nitrogen Fan	12.8	14	45	89	11	1.0	11	33
1K-104D	"	12.8	15	15	89	11	0.0	0	0
1K-105A thru C	Nitrogen Compressor	850.0	1,000	3,000	94	675	1.0	675	2,025
1K-105D	"	850.0	1,000	1,000	94	675	0.0	0	0
1T-101A thru F	Weigh Feeder	60	7	42	83	6	1.0	6	36
1T-101G, H	"	60	7	14	83	6	0.0	0	0
1T-102A thru H	Hoist for Feeders	10.6	12.5	100.0	85	9	0.05	NIL	NIL
1T-104A thru C	Mass Flow Conveyor	4.3	5	15	84	4	1.0	4	12
1T-102D	"	4.3	5	5	84	4	0.0	0	0

TABLE 6 (Continued)

ELECTRICAL SUMMARY - PLANT 1

ITEM NO.	SERVICE	OPERATING[1] BHP/EACH	CONNECTED HP EACH	CONNECTED HP TOTAL	MOTOR[2] EFF. %	OPERATING KW/EACH	ON-STREAM[3] FACTOR	AVERAGE OP. KW EACH	AVERAGE OP. KW TOTAL
1T-105A thru C	Mass Flow Conveyor	4.3	5	15	84	4	1.0	4	12
1T-102D	"	4.3	5	5	84	4	0.0	0	0
1T-105A thru C	"	4.3	5	15	84	4	1.0	4	12
1T-105D	"	4.3	5	5	84	4	9.0	0	0
1T-106A thru C	Mass Flow Bin Feed Conveyor	4.3	5	15	84	4	1.0	4	12
1T-106D	"	4.3	5	5	84	4	0.0	0	0
1T-107	Overhead Traveling Crane	42.5	50	50	88	36	1.0	36	36
1T-108A thru P	Maintenance Hoist	6.0	7	12	82	5	0.05	NIL	NIL
1T-110A thru P	Weight Loss Differential Feeder	4.3	5	80	84	4	1.0	4	64
1T-111A thru H	Weigh Auger Feeder	6.8	8	64	83	6	1.0	6	48
1T-112A thru Z & 1T112AA thru AF	Motorized Diverter Valves	1.7	2	64	80	2	1.0	2	64
1Y-101A thru F	Pulverizer	1,275.0	1,500	3,000	95	1,001	1.0	1,001	6,006
	Hydraulic Pneumatic Spring Part	22.5	30	180	89	21	1.0	21	126
	Classifier Driver	85.0	100	600	93	68	1.0	68	408
	Automatic Lubrication Motor	17.0	20	120	88	14	1.0	14	84
	Automatic Lubrication Motor	17.0	20	120	88	14	1.0	14	84
	Water Spray Cabinet Motor	6.4	7.5	45	85	6	1.0	6	36
	Water Spray Cabinet Motor	6.4	7.5	45	85	6	1.0	6	36
1Y-101G, H	Pulverizer	1,275.0	1,500	3,000	95	1,001	0.0	0	0
	Hydraulic Pneumatic Spring Part	25.5	30	60	89	21	0.0	0	0
	Classifier Driver	85.0	100	200	92	69	0.0	0	0
	Automatic Lubrication Motor	17.0	20	40	88	14	0.0	0	0
	Automatic Lubrication Motor	17.0	20	40	88	14	0.0	0	0
	Water Spray Cabinet Motor	6.4	7.5	15	85	6	0.0	0	0
	Water Spray Cabinet Motor	6.4	7.5	15	85	6	0.0	0	0

TABLE 6 (Continued)

ELECTRICAL SUMMARY-PLANT 1

ITEM NO.	SERVICE	OPERATING[1] BHP/EACH	CONNECTED HP EACH	CONNECTED HP TOTAL	MOTOR[2] EFF. %	OPERATING KW/EACH	ON-STREAM[3] FACTOR	AVERAGE OP. KW EACH	AVERAGE OP. KW TOTAL
1Y-102A thru F	Cyclones (8-5 HP Motors each)	34.0	40	240	84	30	1.0	30	180
1Y-102G, H	"	34.0	40	80	84	30	0.0	0	0
1Y-103A thru F	Main Bag Filter	42.5	15	90	91	35	1.0	35	210
1Y-103G, H	"	42.5	15	30	91	35	0.0	0	0
1Y-104A thru C	Return Nitrogen Bag Filter	8.5	10	30	87	7	1.0	7	21
1Y-104D	"	8.5	10	10	87	7	0.0	0	0
1Y-1-5A thru C	Bunker Top Bag Filter	8.5	10	30	87	7	1.0	7	21
1Y-105D	"	8.5	10	10	87	7	0.0	0	0
1Y-106A thru H	Pneumatic Pump	89.3	105	840	92	72	1.0	72	576
1Y-106I thru P	"	89.3	105	840	92	72	0.0	0	0

TOTAL PLANT CONSUMPTION = 18,632

NOTES:

(1) BHP is estimated at 85% of connected horsepower.

(2) Motor efficiency is estimated as a function of motor size and percent rated full load as provided in "Motor Application and Maintenance Handbook", McGraw Hill Book Company 1969, 3-47 pp.

(3) On-stream factor is defined as the ratio of average operating hours per day to 24 hours.

TABLE 6 (Continued)

ELECTRICAL SUMMARY

PLANT 2

CONSUMED

ITEM NO.	SERVICE	OPERATING KW/TRAIN	TOTAL OP. KW
2T-102	Coal Prewetting Feeder	97	679
2Y-102	Vortex Mixing Tank Mixer		
2Y-103	Coal Slurry Surge Tank Mixer		
2G-102B	Coal Slurry Booster Pump	50	350
2G-104A	Scrubber Condensate Pump	1	7
2E-102	Prewetting Oil Cooler	86	602
		234	1,638

TOTAL PLANT CONSUMPTION = 1,638

TABLE 6 (Continued)

The Electrical Summary for Plant 3 contains proprietary information, and is available for review at Bechtel's Houston offices.

TABLE 6 (Continued)

The Electrical Summary for Plant 4 contains proprietary information, and is available for review at Bechtel's Houston offices.

TABLE 6 (Continued)

The Electrical Summary for Plant 5 contains proprietary information, and is available for review at Bechtel's Houston offices.

TABLE 6 (Continued)

The Electrical Summary for Plant 6 contains proprietary information, and is available for review at Bechtel's Houston offices.

TABLE 6 (Continued)

ELECTRICAL SUMMARY

PLANT 7

A. CONSUMED

PUMPS ITEM NO.	SERVICE	DESIGN HHP	PUMP EFF.%	DESIGN BHP	CONNECTED HP	MOTOR EFF.%	OPERATING KW	ON-STREAM FACTOR	AVERAGE OP. KW
7G-102A	First Stage Condensate Pump	189	76	249	300	93	200	1.0	200
" B	"	"	"	"	"	"	"	0.0	0
7G-103A	Second Stage Condensate Pump	6.6	49	13.5	20	88	11	1.0	11
" B	"	"	"	"	"	"	"	0.0	0
7G-104A	Pre-Compressor K.O. Liquid Pump	0.6	20	3.0	10	82	3	1.0	3
" B	"	"	"	"	"	"	"	0.0	0
7G-111	DEA Sump Pump	2.2	23	9.6	20	85	8	0.05	NIL
7G-113A	Lean DEA Pump	210.7	79	266.7	300	93	214	1.0	214
" B	"	"	"	"	"	"	"	0.0	0
7G-114A	Lean DEA Booster Pump	164.8	71	232.2	300	93	186	1.0	186
" B	"	"	"	"	"	"	"	0.0	0
7G-115A	DEA Regenerator Reflex Pump	1.1	45	2.4	5	81	2	1.0	2
" B	"	"	"	"	"	"	"	0.0	0
7G-117A	DEA Absorber Water Circulation	0.5	35	1.25	2	80	1	1.0	1
" B	"	"	"	"	"	"	"	0.0	0
7G-118A	Fuel Gas Absorber Water Circulation	0.4	20	2.1	5	78	2	1.0	2
" B	"	"	"	"	"	"	"	0.0	0
7G-119A	Steam Condensate Pump	-	-	0.75	0.75	74	1	1.0	1
" B	"	-	-	"	"	"	"	0.0	0
7G-120A	Initial Condensate Pump	0.55	22	2.5	.3	80	2	1.0	2
" B	"	"	"	"	"	"	"	0.0	0
7G-121A	Deethanizer Reflux Pump	8.2	66	12.4	20	86	11	1.0	11
" B	"	"	"	"	"	"	"	0.0	0

TABLE 6 (Continued)

ELECTRICAL SUMMARY

A. CONSUMED

PUMPS ITEM NO.	SERVICE	DESIGN HHP	PUMP EFF.%	DESIGN BHP	CONNECTED HP	MOTOR EFF.%	OPERATING KW	ON-STREAM FACTOR	AVERAGE OP. KW
7G-124A	Debutanizer Reflux Pump	193.1	75	257.5	300	93	207	1.0	207
" B	"	"	"	"	"	"	"	0.0	0
7G-125A	Depropanizer Reflux Pump	30.8	68	45.3	60	89	38	1.0	38
" B	"	"	"	"	"	"	"	0.0	0
7G-126A	Naphtha Splitter Reflux Pump	36.2	65	55	60	89	46	1.0	46
" B	"	"	"	"	"	"	"	"	0
7G-127A	Heavy Naphtha	12.5	70	18.0	20	88	15	1.0	15
" B	"	"	"	"	"	"	"	0.0	0
7G-130A	Butane Wash Pump	68.2	62	110	125	92	89	1.0	89
" B	"	"	"	"	"	"	"	0.0	0
7G-131A	Propane Wash Pump	34.2	54	63.2	100	90	52	1.0	52
" B	"	"	"	"	"	"	"	0.0	0
7G-032A	Refrigerant Blowdown	10.5	20	52.5	60	90	44	0.05	2
7G-151	Caustic (Methanol, Water-Acetic Acid)	1.57	55	2.9	5	82	3	0.05	NIL
7G-152	"	1.57	55	2.9	5	82	3	0.05	NIL
7G-153	Antioxidant Pump	.00015	-	0.25	¼	72	NIL	1.0	NIL
7G-154A	Atmospheric Condensate Pump	41.4	5.0	83	150	91	68	1.0	68
" B	"	"	"	"	"	"	"	0.0	0
7G-155A	Intermediate Pressure Condensate Pump	4.62	40	11.6	20	87	10	1.0	10
" B	"	"	"	"	"	"	"	0.0	0
7G-160	2nd Stage K.O Liquid Pump	7.0	40	42.5	50	90	35	0.1	4
7G-161	DEA Regenerator Ovhd Separator Pump	0.3	70	0.4	2	68	NIL	1.0	-

TABLE 6 (Continued)

ELECTRICAL SUMMARY

A. CONSUMED

PUMPS

ITEM NO.	SERVICE	DESIGN HHP	PUMP EFF.%	DESIGN BHP	CONNECTED HP	MOTOR EFF.%	OPERATING KW	ON-STREAM FACTOR	AVERAGE OP. KW
7G-070A	Surface Condenser Pumps	7.3	50	14.6	20	88	12	0.0	0
" B	"	"	"	"	"	"	"	0.0	0
7G-170A	"	"	"	"	"	"	"	1.0	12
" B	"	"	"	"	"	"	"	0.0	0
7G-270A	"	"	"	"	"	"	"	1.0	12
" B	"	"	"	"	"	"	"	0.0	0
									1,188
	5% Credit for 110% Design Capacity								(59)
	Total Operating KW for Pumps								1,129

AIR COOLER FANS

ITEM NO.	SERVICE	OPERATING BHP	CONNECTED HP	MOTOR EFF.%	OPEEATING KW	ON-STREAM FACTOR	AVERAGE OP. KW
7E-114	DEA Regenerator Ovhd Condenser	20	25	89	17	1.0	17
7E-116	Lean DEA Cooler	24	30	90	20	1.0	20
7E-133	Splitter Ovhd Condenser	16.6	25	89	14	1.0	14
7E-154	Regeneration Cooler	5.3	7.5	84	5	0.5	3
7E-155	Regeneration Gas Cooler	6.2	10	85	5	0.5	3
	Total Air Coolers						57

ELECTRICAL HEATERS

7E-160	Molecular Sieve Regeneration	-	-	-	792	0.5	396
7E-163	F_1 Alumina Regeneration	-	-	-	792	0.5	396
	Total Electrical Heaters		(7-3)				792

TABLE 6 (Continued)

ELECTRICAL SUMMARY

COMPRESSORS & BLOWERS

ITEM NO.	SERVICE	DESIGN HHP	EFF.%	DESIGN BHP	CONNECTED HP	MOTOR EFF.%	DESIGN KW	ON-STREAM FACTOR	AVERAGE DESIGN KW	% DESIGN ALLOWANCE	% OP. POWER CREDIT	AVERAGE OP. KW
7K-101A	Gas Compressor	1507	79	1900	2000	94	1508	1.0	1508	10	5	1433
" B	"	"	"	"	"	"	"	1.0	1508	"	"	1433
" C	"	"	"	"	"	"	"	0.0	0	"	"	0
7K-104	Regeneration Blower	51	73	70	150	92	57	0.5	26	-	-	26
7K-106A	Propane Blower	2574	83	3100	3500	95	2434	1.0	2434	50	25	1826
" B	"	"	"	"	"	"	"	0.0	0	"	"	0
7K-107	Regeneration Gas Compressor	658	77	860	900	95	675	0.5	338	-	-	338
	Total Compressors & Blowers											5056

SPECIAL EQUIPMENT

7V-112	Antifoam Injection Package Feed Pump	-	-	-	¼	-	NIL	0.2	NIL	-	-	NIL
7V-113	Corrosion Inhibiter Package Feed Pump	-	-	-	¼	-	NIL	1.0	NIL	-	-	NIL
	Total Plant Power Consumption											7034

TABLE 6 (Continued)

ELECTRICAL SUMMARY

B. GENERATED

ITEM NO.	SERVICE	THP	EFF.%	BHP	CONNECTED HP	GENERATOR EFF.%	GENERATED KW	ON-STREAM FACTOR	TOTAL KW
7K-102	Turbo Expander First Stage (100% Capacity)	11,200	46.5	5200	-	95	3685	1.0	3685
7K-105	Turbo Expander Second Stage (100% Capacity)	11,700	53.0	6200	-	95	4394	1.0	4394
	Total Generated Electrical Power								8079

C. NET OPERATING KW

Plant Consumption	7,034
Plant Generation	8,079
Net Consumption	-1,045

TABLE 6 (Continued)

ELECTRICAL SUMMARY

PLANT 8

CONSUMED

ITEM NO.	SERVICE	CONNECTED HP		OPERATING KW
			4.16 kV	
8K-70	Nitrogen Compressor	4,500		2,925
8K-20	Heavy Hydrocarbon Compressor	4,000		2,925
8K-10	Inert Gas Compressor	500		336
8K-1	Reactivation Blower	700		400
8V-59	Refrigeration Unit	125		25
			13.8 kV	
8K-30	Pipeline Fuel Compressor	12,500		8,085
			450 V	
8K-70	Auxiliaries	15		--
8K-30	Auxiliaries	40		--
8K-20	Auxiliaries	10		--
8K-10	Auxiliaries	5		--
8P-58	Auxiliaries	10		8
8P-104	A and B Condensate Pumps	5		3
8	Lighting and Control Transformers	45 KVA		40
8	Mercury Vapor Lights	30 KVA		30
			110 V	
Lighting, Instrumentation and Miscellaneous		--		90
	Total KW			14,867

TABLE 6 (Continued)

ELECTRICAL SUMMARY

PLANT 9

SECTION:	PHOSAM UNIT	CHEM-PRO UNIT	TOTAL
AVG. KW CONSUMPTION:	410	121	531
	TOTAL PLANT CONSUMPTION		531

TABLE 6 (Continued)

ELECTRICAL SUMMARY

PLANT 10

CONSUMED PUMPS ITEM NO.	SERVICE	OPERATING HHP	PUMP EFF.%	OPERATING BHP	CONNECTED HP	MOTOR EFF.%	OPERATING KW	ON-STREAM FACTOR	AVERAGE OP. KW
10G-001A	Molten Sulfur Pit Pump	3.2	44	7.3	10	86	6	1.0	6
10G-001B	"	"	"	"	"	"	"	0.0	0
10G-002	Sour Water Return	1.33	50	2.68	5	81	2	1.0	2
10G-003	"	1.33	50	2.68	5	81	2	0.0	0
10G-004	"	1.33	50	2.68	5	81	2	1.0	2
10G-005	"	1.33	50	2.68	5	81	2	0.0	0
10G-006	"	1.33	50	2.68	5	81	2	0.0	0
	Total Pumps								10
	TOTAL PLANT CONSUMPTION =								10

TABLE 6 (Continued)

The Electrical Summary, sheets 1 through 8, for Plant 12 contain proprietary information, and are available for review at Bechtel's Houston offices.

TABLE 6 (Continued)

B. GENERATED

EXPANDERS

ITEM NO.	SERVICE	OPERATING HHP	EXPANDER EFF.%	OPERATING BHP	CONNECTED HP	MOTOR EFF.%	OPERATING KW	ON-STREAM FACTOR	AVERAGE OP. KW
12K-111	Fuel Gas Turbo Expander (First Stage)	6,350	55.9	3,552	4,000	94	2,491	1.0	2,491
12K-112	Fuel Gas Turbo Expander (Second Stage)	8,586	43.8	3,760	4,000	94	2,637	1.0	2,637
12P-001	Electric Power Generator				8,000				5,128
	TOTAL PLANT GENERATION								5,128

C. NET OPERATING KW

Total Plant Consumption	60,590
Total Plant Generation	5,128
Net Power Consumption	55,462

TABLE 6 (Continued)

ELECTRICAL SUMMARY

PLANT 15

A. TOTAL PLANT CONSUMPTION	34,742 KW
B. TOTAL PLANT GENERATION	1,278 KW
C. NET POWER CONSUMPTION	33,464 KW

TABLE 6 (Continued)

ELECTRICAL SUMMARY

PLANT 17

CONSUMED

ITEM NO.	SERVICE	OPERATING KW	2-TRAIN TOTAL KW
PUMPS			
17G-101 A/B	Fractioner Feed	192	384
17G-102 A/B	Heavy Distillate	151	302
17G-103 A/B	Flush Oil Pumparound	77	154
17G-104 A/B	Mid-Dist. Pumparound	129	258
17G-105 A/B	Heavy Naphtha	86	172
17G-106 A/B	Light Naphtha	30	60
17G-107 A/B	Sour Water	14	28
17G-108 A/B	Mid-Dist. Product	28	56
17G-109 A/B	Flush Oil Product	25	50
17G-110 A/B	Desalter Feed	75	150
17G-111 A/B	Aftercooler Separator	1	2
	Subtotal	808	1,616
COMPRESSORS			
17K-101 A/B	Vent Gas Compressor	366	732
	Subtotal	366	732
FANS			
17F-101	Combustion Air	58	116
17F-101	Flue Gas	60	120
	Subtotal	118	236

TABLE 6 (Continued)

ELECTRICAL SUMMARY

PLANT 17

CONSUMED

ITEM NO.	SERVICE	OPERATING KW	2-TRAIN TOTAL KW
AIR-COOLED EXCHANGERS			
17E-103	Mid-Distillate P.A. Trim Cooler	6	12
17E-105	Flush Oil P.A. Trim Cooler	4	8
17E-106	Heavy Naphtha P.A. Cooler	40	80
17E-107	Fractioner Overhead Condenser	160	320
17E-110	Mid-Distillate Product Trim Cooler	60	120
17E-112	Flush Oil Product Trim Cooler	60	120
17E-115	Heavy Distillate Trim Cooler	25	50
	Subtotal	355	710
17-Y-101	Electrical Desalter	40	80
	TOTAL	1,687	3,374

TOTAL PLANT CONSUMPTION 3,374

TABLE 6 (Continued)

ELECTRICAL SUMMARY

PLANT 18

SECTION:	TWO-STAGE HYDROTREATER	105 RON PLATFORMER	TOTAL
AVG. KW CONSUMPTION:	1,116	4,588	5,704
	TOTAL CONSUMPTION		5,704

TABLE 6 (Continued)

ELECTRICAL SUMMARY

PLANT 19

CONSUMED PUMPS

ITEM NO.	SERVICE	OPERATING HHP	PUMP EFF.%	OPERATING BHP	CONNECTED HP	MOTOR EFF.%	OPERATING KW	ON-STREAM FACTOR	AVERAGE OP. KW
19G-001 A	Flare K.O. Drum Slop Oil	15.8	4.4	35.9	60	89	30	NIL	0
19G-001 B	" "	15.8	4.4	35.9	60	89	30	0.0	0
19G-002 A	Rail/Truck Loading Flare K.O. Drum	5.2	43.5	12.0	15	86	10	0.2	2
19G-002 B	" "	5.2	43.5	12.0	15	86	10	0.0	0
19G-003 A	Barge Loading Flare K.O. Drum	5.6	43.5	12.8	15	86	11	0.05	6
19G-003 B	" "	5.6	43.5	12.8	15	86	11	0.0	0
19G-004 A	Flare K.O. Drum Condensate	2.0	30	67	10	85	6	0.05	NIL
19G-004 B	" "	2.0	30	67	10	85	6	0.0	0
19G-005 A	" "	2.0	30	67	10	85	6	0.05	NIL
19G-005 B	" "	2.0	30	67	10	85	6	0.0	0
19G-101 A	Slurry Blowdown Pump	10.0	45	22	25	87	19	0.05	1
19G-101 B	" "	10.0	45	22	25	87	19	0.0	0
19G-201 A	" "	10.0	45	22	25	87	19	0.05	1
19G-201 B	" "	10.0	45	22	25	87	19	0.0	0
19G-102 A	" "	10.0	45	22	25	87	19	0.05	1
19G-102 B	" "	10.0	45	22	25	87	19	0.0	0
19G-202 A	" "	10.0	45	22	25	87	19	0.05	1
19G-202 B	" "	10.0	45	22	25	87	19	0.0	0
19G-303 A	" "	10.0	45	22	25	87	19	0.05	1
19G-303 B	" "	10.0	45	22	25	87	19	0.0	0
19G-402 A	" "	10.0	45	22	25	87	19	0.05	1
19G-402 B	" "	10.0	45	22	25	87	19	0.0	0

TABLE 6 (Continued)

ITEM NO.	SERVICE	OPERATING HHP	PUMP EFF.%	OPERATING BHP	CONNECTED HP	MOTOR EFF.%	OPERATING KW	ON-STREAM FACTOR	AVERAGE OP. KW
19G-103 A	Slurry Blwodown Pump	10.0	45	22	25	87	19	0.05	1
19G-103 B	" "	10.0	45	22	25	87	19	0.0	0
19G-203 A	" "	10.0	45	22	25	87	19	0.05	1
19G-203 B	" "	10.0	45	22	25	87	19	0.0	0
19G-303 A	" "	10.0	45	22	25	87	19	0.05	1
19G-303 B	" "	10.0	45	22	25	87	19	0.0	0
19G-403 A	" "	10.0	45	22	25	87	19	0.05	1
19G-403 B	" "	10.0	45	22	25	87	19	0.0	0
	TOTAL PUMPS								18
	TOTAL PLANT CONSUMPTION								18

TABLE 6 (Continued)

ELECTRICAL SUMMARY

PLANT 20

ELECTRICAL POWER

PUMPS

ITEM NO.	SERVICE	OPERATING HHP	PUMP EFF.%	OPERATING BHP	CONNECTED HP	MOTOR EFF.%	OPERATING KW	ON-STREAM FACTOR	AVERAGE OP. KW
20G-101A	Propane to Tank Car/Barge Loading	98	76.5	128.1	150	93	103	0.15	15
" B	"	"	"	"	"	"	"	0.0	0
20G-102A	LSR Gasoline to Barge/Tank Car Loading	189	75.0	252	350	93	202	0.06	12
" B	"	"	"	"	"	"	"	0.0	0
20G-103A	Reformate to Barge/Tank Car Loading	227	76.0	298.7	400	94	237	0.15	36
" B	"	"	"	"	"	"	"	0.0	0
20G-104A	Middle Distillate to Barge/ Tank Car Loading	248	76.0	324.2	400	94	231	0.23	58
" B	"	"	"	"	"	"	"	0.0	0
20G-105A	Heavy Distillate to Barge/ Tank Car Loading	226	77.5	291.6	350	94	231	0.08	18
" B	"	"	"	"	"	"	"	0.0	0
20G-106A	Anhydrous Ammonia to Barge/ Tank Car Loading	69.9	80.5	86.8	100	92	70	0.05	4
" B	"	"	"	"	"	"	"	0.0	0
20G-107A	Molten Sulfur to Barge/Tank Car Loading	1.60	80.0	199	250	93	160	0.03	5
" B	"	"	"	"	"	"	"	0.0	0
20G-109A	Raw Heavy Naphtha to Plant 18	44	48.0	91.7	125	92	74	1.0	74
" B	"	"	"	"	"	"	"	0.0	0
20G-111A	Vacuum Tower Bottoms to Plant 12	111	60.0	185	200	93	148	0.05	7
" B	"	"	"	"	"	"	"	0.0	0

TABLE 6 (Continued)

ELECTRICAL SUMMARY

PLANT 20

PUMPS ITEM NO.	SERVICE	OPERATING HHP	PUMP EFF.%	OPERATING BHP	CONNECTED HP	MOTOR EFF.T	OPERATING KW	ON-STREAM FACTOR	AVERAGE OP. KW
20G-112A	Sour Water to Plant 9	98.2	76.5	128.4	200	92	104	1.0	104
" B	"	"	"	"	"	"	"	0.0	0
20G-114A	Distillate Flush Oil to Process Plants	70.8	58.0	122.1	200	92	99	1.0	99
" B	"	"	"	"	"	"	"	1.0	99
" C	"	"	"	"	"	"	"	0.0	0
20G-115A	Phenols to Tank Car/Truck Loading	90.5	79.0	114.6	125	92	93	0.02	2
" B	"	"	"	"	"	"	"	0.0	0
20G-116A	Dilute Sour Water to Plant 4	56.1	72.0	77.9	125	91	64	1.0	64
" B	"	"	"	"	"	"	"	0.0	0
20G-119A	Heavy Flush Oil to Plant 3	13.6	48.5	28.0	30	88	24	1.0	24
" B	"	"	"	"	"	"	"	0.0	0
20G-120A	Light Slop to Plant 17	15.37	35.0	43.9	60	90	36	0.1	4
" B	"	"	"	"	"	"	"	0.0	0
20G-121A	Heavy Slop to Plant 17	15.9	35.0	45.4	60	90	38	0.10	4
" B	"	"	"	"	"	"	"	0.0	0
20G-122A	Butane LPG to Tank Car/Barge Loading	88.0	76.5	128.1	150	92	104	0.11	11
" B	"	"	"	"	"	"	"	0.0	0
20G-123A	Wet Slop to Plant 17	31.57	48.0	65.7	75	92	53	0.10	5
" B	"	"	"	"	"	"	"	0.0	0
20G-124A	20% Caustic Solution	1.87	22.5	8.4	15	85	7	1.0	7
" B	"	"	"	"	"	"	"	0.0	0

TABLE 6 (Continued)

ELECTRICAL SUMMARY

PLANT 20

PUMPS ITEM NO.	SERVICE	OPERATING HHP	PUMP EFF.%	OPERATING BHP	CONNECTED HP	MOTOR EFF.%	OPERATING KW	ON-STREAM FACTOR	AVERAGE OP. KW
20G-125A	Neutral Oil	51.65	70.0	73.8	100	91	61	.05	3
" B	"	"	"	"	"	"	"	0.0	0
20G-127A	50% Caustic Solution	1.66	46.8	3.6	5	82	3	0.4	1
" B	"	"	"	"	"	"	"	0.0	0
20G-128A	Vacuum Tower Side Draw-off	2.27	15.0	15.0	20	87	13	1.0	13
" B	"	"	"	"	"	"	"		
" C	"	"	"	"	"	"	"	0.0	0
20G-129A	Heavy Flush Oil	104.3	79.9	131.0	200	92	106	1.0	106
" B	"	"	"	"	"	"	"	1.0	106
" C	"	"	"	"	"	"	"	0.0	0
20G-130A	98% Sulfuric Acid	2.58	54.0	4.7	7.5	86	4	1.0	4
" B	"	"	"	"	"	"	"	1.0	4
" C	"	"	"	"	"	"	"	0.0	0
20G-130A	20% Sulfuric Acid	197.0	12	16.0	20	88	14	1.0	14
" B	"	"	"	"	"	"	"	0.0	0
20G-132A	Potable Water Pump	13.0	36	36.1	40	91	30	0.1	3
" B	"	"	"	"	"	"	"	0.0	0
20G-133	Heavy Flush Oil Jockey Pump	10.4	46	22.7	40	88	19	1.0	19
20V-101	Propane Refrigeration and Heating System Pump	170.0	65	261.0	275	93	209	0.1	21
20V-102	Anhydrous Ammonia Refrigeration and Heating System Pump	159.0	65	244.0	275	93	196	0.1	20
	Total Pumps								966

TABLE 6 (Continued)

ELECTRICAL SUMMARY

PLANT 20

COMPRESSORS

ITEM NO.	SERVICE	OPERATING HHP	CONNECTED HP	MOTOR EFF.%	OPERATING KW	ON-STREAM FACTOR	AVERAGE OP. KW
20V-101	Propane Refrigeration Compressor	219	250	92	178	0.88	157
20V-102	Anhydrous Ammonia Refrigeration and Heating System Compressors	413.8	450	93	332	0.93	309
20K-101A	Sour Water Vapor Compressors	156	200	90	129	1.0	129
" B	"	"	"	"	"	0.0	0
	Total Compressors						595

SPECIAL EQUIPMENT

		CONNECTED HP EACH	CONNECTED HP TOTAL	MOTOR EFF.%	OPERATING KW/EACH	ON-STREAM FACTOR	AVERAGE OP. KW EACH	AVERAGE OP. KW TOTAL
20Y-102A-H	20D-114A&B Mixers	10	80	87	9	1.0	9	72
20Y-103A-H	20D-111A&B Mixers	10	80	87	9	1.0	9	72
20Y-104A-D	20D-119 Mixers	10	40	87	9	1.0	9	36
20Y-105A-D	20D-120 Mixers	10	40	87	9	1.0	9	36
20Y-106A-D	20D-121 Mixers	10	40	87	9	1.0	9	36
20Y-107A-D	20D-123 Mixers	10	40	87	9	1.0	9	36
20Y-108A-D	20D-127 Mixers	10	40	87	9	1.0	9	36
								324

TOTAL PLANT CONSUMPTION 1,885

TABLE 6 (Continued)

ELECTRICAL SUMMARY

PLANT 22

CONSUMED COMPRESSOR ITEM NO.	SERVICE	OPERATING BHP	CONNECTED HP	MOTOR EFF. %	OPERATING KW	ON-STREAM FACTOR	AVERAGE OP. KW
22K-101 A	LSR Gasoline Vapor Compressor	36	40	88	31	0.04	1
22K-101 B	" "	36	40	88	31	0.0	0
	TOTAL COMPRESSORS						1
	TOTAL PLANT CONSUMPTION						1

TABLE 6 (Continued)

ELECTRICAL SUMMARY

PLANT 23

CONSUMED COMPRESSORS ITEM NO.	SERVICE	OPERATING HHP	PUMP EFF.%	OPERATING BHP	CONNECTED HP	MOTOR EFF.%	OPERATING KW	ON-STREAM FACTOR	AVERAGE OP. KW
23K-001 A	Propane Vapor Compressor	-	-	120	150.0	92.0	97.3	0.15	15
23K-001 B	" "	-	-	120	150.0	92.0	97.3	0.0	0
23K-002 A	Butane Vapor Compressor	-	-	75	100.0	92.0	60.8	0.11	7
23K-002 B	" "	-	-	75	100.0	92.0	60.8	0.0	0
23K-003 A	Anyhdrous NH_3 Vapor Compressor	-	-	75	100.0	92.0	60.8	0.05	3
23K-003 B	" "	-	-	75	100.0	92.0	60.8	0.0	0
23K-104 A	LSR Gasoline Compressor	-	-	35	50.0	90.0	29.0	0.06	2
23K-104 B	" "	-	-	35	50.0	90.0	60.8	0.0	0
	TOTAL COMPRESSORS								27
PUMPS									
23C-101	Weighing Scale Pit Sump Pump	0.15	20.	0.75	2.0	85	0.7	0.5	NIL
	TOTAL PLANT CONSUMPTION								27

TABLE 6 (Continued)

ELECTRICAL SUMMARY

PLANT 26

	SECTION	CONNECTED H.P.				AVERAGE OPERATING KW			
		CONTINUOUS	STANDBY	INTERMITT.	TOTAL	CONTINUOUS	STANDBY	INTERMITT.	TOTAL
I	Railcar Unlaoding	1,575	-	45	1,620	0	0	0	0
II	Barge Unloading	2,610	-	25	2,635	666	0	3	669
III	Feed to Cleaning Plant	2,830	405	269	3,504	1,039	0	50	1,089
IV	Feed to Pulverizer Plant	1,440	725	76	2,441	979	0	94	1,073
V	Feed to Boiler Plant	190	125	17	332	129	0	6	135
VI	Auxiliary Stockpile	570	-	-	570	77	0	0	77
VII	Reclaim from Dead Storage	170	-	10	180	12	0	1	13
	TOTAL	9,385	1,255	642	11,282	2,902	0	154	3,056
					TOTAL PLANT CONSUMPTION				3,056

TABLE 6 (Continued)

ELECTRICAL SUMMARY

PLANT 27

CONSUMED SERVICE	OPERATING MHP (1)	OPERATING KW (1)	ON-STREAM FACTOR	AVERAGE OP. KW
Plant Feed Facility	469	327	0.54	176
Preparation Unit	11,490	7,933	0.54	4,284
Coarse Refuse Facilities	140	98	0.54	53
Boiler Fuel Facilities	664	476	0.54	257
Clean Coal Facilities	1,463	1,015	0.54	548
TOTAL PLANT CONSUMPTION				5,318

NOTES: (1) Obtained from the detailed listing attached.

TABLE 6 (Continued)

ELECTRICAL SUMMARY

PLANT 27

(DETAILED LISTING)

R & S ITEM NO.	SERVICE	QUAN.	CONNECTED HP/EACH	NOS. IN OPERATION	TOTAL OPERATING MHP	OPERATING BHP(1)	MOTOR EFF.%	OPERATING KW
	PLANT FEED FACILITIES							
1.1	Raw Coal Feeders	4	2	3	6	5.1	80	5
1.2	Plant Feed Conveyors	4	125	3	375	318.8	92	255
1.3	Plant Feed Belt Scales	4	-	-	-	-	-	-
1.4	Plant Feed Magnet Belts	4	3	3	9	7.7	81	7
1.4	Plant Feed Magnets	4	5000 W	-	-	-	-	4
1.5	Dust Collector							
	Rotary Valve	1	1/3	1	1/3	.28	70	NIL
	Traveler	1	1/3	1	1/3	.28	70	NIL
	Blow-Back Fan	1	5	1	5	4.25	83	4
	Exhaust Fan	1	30	1	30	25.5	87	22
	Screw Conveyor	1	3	1	3	2.55	81	2
1.6	Sump Pumps	2	40	1	40	34	90	28
					468.67			327
	PREPARATION PLANT							
	PRIMARY COARSE COAL CIRCUIT							
2.2	Raw Coal Screens	8	25	3	75	63.4	89	53
2.3	Prewet Screens	8	20	3	60	51	88	43
2.4	Primary Heavy Medium Vessel Paddles	4	10	3	30	25.5	87	22

TABLE 6 (Continued)

ELECTRICAL SUMMARY

PLANT 27

(DETAILED LISTING)

R & S ITEM NO.	SERVICE	QUAN.	CONNECTED HP/EACH	NOS. IN OPERATION	TOTAL OPERATING MHP	OPERATING BHP(1)	MOTOR EFF.%	OPERATING KW
2.4	Primary Heavy Medium Vessel Elevators	4	15	3	45	38.2	88	33
2.5	Primary Heavy Medium Vessel Pumps	4	200	3	600	510	93	409
2.7	Coarse Clean Coal Screens	8	20	3	60	51	88	43
2.8	3" x 0 Clean Coal Belts	4	10	3	30	25.5	87	22
2.9	3" x 0 Coal Diverter Gates	4	10	3	30	25.5	87	22
					930			647
	SECONDARY COARSE COAL CIRCUIT							
3.1	Secondary Heavy Medium Vessel Paddles	4	5	3	15	12.8	83	12
3.1	Secondary Heavy Medium Vessel Elevators	4	7 ½	3	22.5	19.1	84	17
3.2	Secondary Heavy Medium Vessel Pumps	4	75	3	225	191	91	156
3.4	Coarse Middlings Screens	4	20	3	60	51	88	43
3.5	Coarse Middlings Crushers	4	20	3	60	51	88	43
3.6	Middlings Conveyors	4	20	3	60	51	88	43
3.7	Middlings Diverter Gates	4	10	3	30	25.5	87	22
3.8	Coarse Refuse Screens	4	20	3	60	51	88	43
3.9	Coarse Refuse Diverter Gates	4	10	3	30	25.5	87	22
					562.5			401

TABLE 6 (Continued)

ELECTRICAL SUMMARY

PLANT 27

(DETAILED LISTING)

R & S ITEM NO.	SERVICE	QUAN.	CONNECTED HP/EACH	NOS. IN OPERATION	TOTAL OPERATING MHP	OPERATING BHP(1)	MOTOR EFF.%	OPERATING KW
	PRIMARY SMALL COAL CIRCUIT							
4.3	Desliming Screens	12	20	6	120	102	88	86
4.4	Primary Heavy Medium Cyclone Pumps	4	250	3	750	637.5	93	511
4.7	Primary Samll Refuse Screens	4	20	3	60	51	88	43
4.8	Primary Small Refuse Diverter Gates	4	10	3	30	25.5	87	22
4.10	Small Clean Coal Screens	12	20	6	120	102	88	86
4.11	Small Clean Coal Centrifuges	12	30	6	180	153	89	128
4.11	Small Coal Centrifuges Oscillators	12	10	6	60	51	87	43
4.11	Small Coal Centrifuges Oil Pumps	12	1/4	6	1.5	1.3	70	1
4.12	3/8" x 100M Clean Coal Conveyors	4	10	3	30	25.5	87	22
4.13	3/8" x 100M Coal Diverter Gates	4	10	3	30	25.5	87	22
					1,381.5			964
	SECONDARY SMALL COAL CIRCUIT							
5.1	Secondary Heavy Medium Cyclone Pumps	4	150	3	450	382.5	92	310
5.4	Secondary Refuse Screens	4	20	3	60	51	88	43

TABLE 6 (Continued)

ELECTRICAL SUMMARY

PLANT 27

(DETAILED LISTING)

R & S ITEM NO.	SERVICE	QUAN.	CONNECTED HP/EACH	NOS. IN OPERATION	TOTAL OPERATING MHP	OPERATING BHP(1)	MOTOR EFF.%	OPERATING KW
6.12	Clean Coal Filter Blowers	4	50	3	150	127.5	90	106
6.12	Clean Coal Filter Filtrate Pumps	4	60	3	180	153.0	91	125
					4,648.5			3196
	MAGNETITE RECOVERY & DENSITY CONTROL							
7.1	Vessel Magnetic Separators	8	2	3	6	5.1	80	5
7.2	Cyclone Magnetic Separators	12	3	6	18	15.3	81	14
7.3	Dilute Medium Pumps	4	150	3	450	382.5	92	310
7.5	Secondary Magnetic Separators	16	5	9	45	38.1	83	34
7.6	Magnetite Thickeners	4	5	3	15	12.8	83	12
7.6	Magnetite Thickeners Rake Lifts	4	1/2	3	1.5	1.3	72	1
7.7	Magnetite Thickeners Underflow Pumps	4	20	3	60	51	88	43
7.8	MTO Pumps	4	100	3	300	255	92	207
7.9	Tailings Pumps	4	75	3	225	191.2	91	156
7.10	Magnetite Feeders	4	3	3	9.0	7.7	81	7
					1,189.5			789
	WATER CLARIFICATION CIRCUIT							
8.1	Static Thickeners	8	5	3	15	12.8	83	12
8.1	Static Thickeners Rake Lift	4	2	3	6	5.1	80	5

TABLE 6 (Continued)

ELECTRICAL SUMMARY

PLANT 27

(DETAILED LISTING)

R & S ITEM NO.	SERVICE	QUAN.	CONNECTED HP/EACH	NOS. IN OPERATION	TOTAL OPERATING MHP	OPERATING BHP(1)	MOTOR EFF.%	OPERATING KW
5.5	Small Refuse Pumps	4	50	3	150	127.5	90	106
5.7	Small Middlings Screens	4	15	3	45	38.2	88	32
5.8	Small Middlings Centrifuges	4	30	3	90	76.5	89	64
5.8	Small Middlings Centrifuges Oscillation	4	10	3	30	25.5	87	22
5.8	Small Middlings Centrifuges Oil Pumps	4	1/4	3	.75	.64	70	1
					825.75			578
	FINE COAL CIRCUIT							
6.1	Primary Hydrocyclone Pumps	4	200	3	600	510	93	409
6.3	Secondary Hydrocyclone Pumps	4	125	3	375	318.8	92	259
6.6	Classifying Cyclone Pumps	8	200	3	600	510	93	409
6.9	Fine Clean Coal Centrifuges	8	50	3	150	127.5	90	106
6.10	Flotation Cells	32	30	21	630	535.5	89	449
6.10	Flotation Cell Skimmers	16	3/4	9	6.75	5.74	74	6
6.10	Flotation Cell Blowers	4	40	3	120	102	90	84
6.11	Reagent Fill Pumps	2	3	1	3	2.55	81	2
6.11	Reagent Feeders	8	1/4	3	.75	.64	70	1
6.12	Clean Coal Filters	4	5	3	15	128	83	12
6.12	Clean Coal Filter Agitators	12	3	6	18	15.3	81	14
6.12	Clean Coal Filter Vacuum Pumps	4	600	3	1800	1530	94	1214

TABLE 6 (Continued)

ELECTRICAL SUMMARY

PLANT 27

(DETAILED LISTING)

R & S ITEM NO.	SERVICE	QUAN.	CONNECTED HP/EACH	NOS. IN OPERATION	TOTAL OPERATING MHP	OPERATING BHP(1)	MOTOR EFF.%	OPERATING KW
8.2	Flocculant Mixers	2	1½	1	1.5	1.3	78	1
8.2	Flocculant Storage Pumps	4	1	3	3	2.55	77	2
8.2	Flocculant Pumps	4	1/4	3	.75	0.64	70	1
8.3	Static Thickener Underflow Pumps	8	75	3	225	191.2	91	157
8.4	Clarified Water Pumps	4	300	3	900	765.0	93	614
8.5	Thickener Tunnel Sump Pumps	4	3	3	9	7.65	81	7
8.6	Pond Return Pump	1	50	1	50	42.5	90	35
					1,210.25			834
	MISCELLANEOUS PLANT EQUIPMENT							
9.1	Trolleys & Hoists							
	Machinery Well	1	10	1	10	8.5	87	7
	Machinery Well	2	1	1	1	0.85	77	1
	Refuse Bin	1	3	1	3	2.55	81	2
	Boiler Fuel Sample Building	1	3	1	3	2.55	81	2
	Clean Coal Sample Building	1	7½	1	7.5	6.38	84	6
9.2	Gland Water Pumps	4	50	3	150	127.5	90	106
9.4	Plant Clean-Up Pumps	4	25	3	75	63.8	89	53
9.5	Plant Washdown Pumps	4	25	3	75	63.8	89	53
9.6	Mangetite Clean-Up Pumps	4	25	3	75	63.8	89	53

TABLE 6 (Continued)

ELECTRICAL SUMMARY

PLANT 27

(DETAILED LISTING)

R & S ITEM NO.	SERVICE	QUAN.	CONNECTED HP/EACH	NOS. IN OPERATION	TOTAL OPERATING MHP	OPERATING BHP(1)	MOTOR EFF.%	OPERATING KW
9.7	Plant Air Compressors	4	60	3	180	153.0	91	125
9.7	Instrument Air Compressors	4	30	3	90	76.5	89	64
9.7	Instrument Air Dryer	4	1/2	3	1.5	1.28	72	1
9.9	Potable Water Pump	1	5	1	5	4.25	83	4
					676.0			477
	SERVICE WING BUILDING							
10.1	Personnel Elevator	1	30	1	30	25.5	89	22
10.1	Elevator Pit Sump Pump	1	1/3	1	0.33	0.28	70	NIL
10.2	Freight Elevator	1	35	1	35	29.75	90	25
10.2	Elevator Pit Sump Pump	1	1/3	1	0.33	0.28	70	NIL
					65.66			47
	Total Plant Preparation				11,489.66			7,933
	COARSE REFUSE FACILITIES							
11.1	Coarse Refuse Conveyors 1A & 1B	2	100	1	100	85	92	69
11.3	Refuse Bin Truck Loading Gate	1	10	1	10	8.5	87	7
11.4	Sump Pump	1	30	1	30	25.5	89	22
					140			98

TABLE 6 (Continued)

ELECTRICAL SUMMARY

PLANT 27

(DETAILED LISTING)

R & S ITEM NO.	SERVICE	QUAN.	CONNECTED HP/EACH	NOS. IN OPERATION	TOTAL OPERATING MHP	OPERATING BHP(1)	MOTOR EFF.%	OPERATING KW
	BOILER FUEL FACILITIES							
12.1	Boiler Fuel Conveyors 1A & 1B	2	60	1	60	51.0	90	42
12.2	Boiler Fuel Belt Scales	2	-	-	-	-	-	-
12.3	Boiler Fuel Sampling System							
	Primary & Secondary Sampler	2	7 ½	1	7.5	6.38	84	6
	Primary Belt Feeder	2	1	1	1	0.85	77	1
	Sample Crusher	2	15	1	15	12.75	88	12
	Secondary Belt Feeder	2	1	1	1	0.85	77	1
	Rejects Elevators	2	2	1	2	1.7	80	1
12.4	Boiler Fuel Conveyors 1A & 1B Transfer Gates	2	10	1	10	8.5	87	7
12.5	Boiler Fuel Conveyors 2A & 2B	2	20	1	20	17.0	88	14
12.6	Boiler Fuel Conveyors 2A & 2B Transfer Gates	2	10	1	10	8.5	87	7
12.7	Boiler Fuel Stacker Conveyor	1	40	1	40	34.0	90	28
12.8	Boiler Fuel Stacker - Belt	1	25	1	25	21.25	89	18
	Travel	4	10	1	10	8.5	87	7
	Luffing	1	25	1	25	21.25	89	18
	Slewing	1	15	1	15	12.75	88	11

TABLE 6 (Continued)

ELECTRICAL SUMMARY

PLANT 27

(DETAILED LISTING)

R & S ITEM NO.	SERVICE	QUAN.	CONNECTED HP/EACH	NOS. IN OPERATION	TOTAL OPERATING MHP	OPERATING BHP(1)	MOTOR EFF.%	OPERATING KW
12.9	Boiler Fuel Reclaimer - Belt	1	15	1	15	12.75	88	11
	Bridge	2	7 ½	1	7.5	6.38	84	6
	Bucket	2	50	1	50	42.5	90	35
	Carriage	1	40	1	40	34.0	90	28
12.10	Boiler Fuel Reclaim Conveyor	1	50	1	50	42.5	90	35
12.11	Boiler Fuel By-Pass Conveyor #1	1	20	1	20	17.0	88	14
12.12	Boiler Fuel By-Pass Conveyor #2	1	50	1	50	42.5	90	35
12.13	Dust Collector A1 & A2							
	Screw Conveyor & Rotary Valve	2	1 ½	1	1.5	1.28	74	1
	Travel	2	1/3	1	0.33	0.28	70	NIL
	Blowback Fan	2	5	1	5	4.25	83	4
	Exhaust Fan	2	15	1	15	12.75	88	11
	Dust Diverter Valve	2	1/2	1	0.5	0.43	70	NIL
12.13	Dust Collector B1							
	Rotary Valve	1	1/3	1	0.33	0.28	70	NIL
	Traveler	1	1/3	1	0.33	0.28	70	NIL
	Blowback Fan	1	3	1	3	2.55	81	2
	Exhaust Fan	1	20	1	20	17.0	88	14
	Screw Conveyors	2	1	1	1	0.85	77	1
12.13	Dust Collector B2							
	Rotary Valve	1	1/3	1	1/3	0.28	70	NIL

TABLE 6 (Continued)

ELECTRICAL SUMMARY

PLANT 27

(DETAILED LISTING)

R & S ITEM NO.	SERVICE	QUAN.	CONNECTED HP/EACH	NOS. IN OPERATION	TOTAL OPERATING MHP	OPERATING BHP(1)	MOTOR EFF.%	OPERATING KW
	Traveler	1	1/3	1	1/3	.28	70	NIL
	Blowback Fan	1	3	1	3	2.55	81	2
	Exhaust Fan	1	15	1	15	12.75	88	11
	Screw	1	2	1	2	1.7	80	1
12.14	Sump Pump A	1	20	1	20	17.0	88	14
12.14	Sump Pump B	1	15	1	15	12.75	88	11
12.14	Sump Pump C	1	25	1	25	21.25	89	18
12.14	Sump Pump D	1	5	1	5	4.25	83	4
12.14	Sump Pump E	1	30	1	30	25.5	89	22
12.14	Sump Pump F	1	7 ½	1	7.5	6.38	84	6
12.14	Sump Pump G	1	5	1	5	4.25	83	4
12.13	Dust Collector C (Total)	1	17.67	1	17.67	15.0	86	13
					663.8			476
	CLEAN COAL FACILITIES							
13.1	Clean Coal Conveyor 1A & 1B	2	250	1	250	212.5	93	170
13.2	Clean Coal Belt Scales	2	-	-	-	-	-	-
13.3	Clean Coal Sampling System							
	Primary & Secondary Sampler	2	7 ½	1	7.5	6.38	84	6
	Primary Belt Feeder	2	1	1	1	.85	75	1
	Sample Crusher	2	15	1	15	12.75	88	11
	Secondary Belt Feeder	2	1	1	1	.85	77	1

TABLE 6 (Continued)

ELECTRICAL SUMMARY

PLANT 27

(DETAILED LISTING)

R & S ITEM NO.	SERVICE	QUAN.	CONNECTED HP/EACH	NOS. IN OPERATION	TOTAL OPERATING MHP	OPERATING BHP(1)	MOTOR EFF.%	OPERATING KW
	Reject Elevator	2	2	1	2	1.7	80	1
13.4	Clean Coal Conveyors 1A & 1B Transfer Gates	2	10	1	10	8.5	87	6
13.5	Clean Coal Conveyors 2A & 2B	2	125	1	125	106.2	92	86
13.6	Clean Coal Conveyors 2A & 2B Transfer Gates	2	10	1	10	8.5	87	6
13.7	Clean Coal Stacker Conveyors	1	250	1	250	212.5	93	170
13.8	Clean Coal Stacker - Belt	1	100	1	100	85	92	69
	Travel	4	10	1	10	8.5	87	6
	Luffing	1	25	1	25	21.25	89	18
	Slewing	1	15	1	15	12.75	88	11
13.9	Clean Coal Reclaimer - Belt	1	30	1	30	25.5	89	22
	Bridge	2	10	1	10	8.5	87	6
	Bucket	2	50	1	50	42.5	90	35
	Carriage	1	40	1	40	34.0	90	28
13.10	Clean Coal Reclaim Conveyor	1	125	1	125	106.2	92	86
13.11	Emergency Clean Coal Reclaim Conveyor	1	125	1	125	106.2	92	86
13.12	Dust Collector A1 & A2							
	Screw Conveyor & Rotary Valve	2	1 ½	1	1.5	1.28	78	1
	Traveler	2	1/3	1	0.33	.28	70	NIL

TABLE 6 (Continued)

ELECTRICAL SUMMARY

PLANT 27

(DETAILED LISTING)

R & S ITEM NO.	SERVICE	QUAN.	CONNECTED HP/EACH	NOS. IN OPERATION	TOTAL OPERATING MHP	OPERATING BHP(1)	MOTOR EFF.%	OPERATING KW
	Exhaust Fan	2	25	1	25	21.25	89	18
	Blowback Fan	2	5	1	5	4.25	83	4
	Dust Diverter Valve	2	1/2	1	0.5	.43	74	NIL
13.12	Dust Collector Bi							
	Rotary Valves	1	1/3	1	1/3	.28	70	NIL
	Traveler	1	1/3	1	1/3	.28	70	NIL
	Blowback Fan	1	5	1	5	4.25	83	4
	Exhaust Fan	1	25	1	25	21.25	89	18
	Screw Conveyor	1	1	1	1	.85	77	1
13.12	Dust Collector B2							
	Rotary Valves	1	1/3	1	1/3	.28	70	NIL
	Traveler	1	1/3	1	1/3	.28	70	NIL
	Blowback Fan	1	5	1	5	4.25	83	4
	Exhaust Fan	1	30	1	30	25.5	89	22
	Screw Conveyor	1	1	1	1	.85	77	1
	Screw Conveyor	1	1 ½	1	1 ½	1.28	74	1
	Dust Diverter Valve	1	1/2	1	1 ½	1.28	70	1
13.12	Dust Collector C							
	Rotary Valves	1	1/3	1	1/3	.28	70	NIL
	Traveler	1	1/3	1	1/3	.28	70	NIL
	Blowback Fan	1	5	1	5	4.25	83	4
	Exhaust Fan	1	25	1	25	21.25	89	18

TABLE 6 (Continued)

ELECTRICAL SUMMARY

PLANT 27

(DETAILED LISTING)

R & S ITEM NO.	SERVICE	QUAN.	CONNECTED HP/EACH	NOS. IN OPERATION	TOTAL OPERATING MHP	OPERATING BHP(1)	MOTOR EFF.%	OPERATING KW
	Screw Conveyor	1	1 ½	1	1 ½	1.28	74	1
	Dust Diverter Valve	1	1/2	1	1/2	0.43	70	NIL
13.13	Sump Pump A	1	20	1	20	17.0	88	14
13.13	Sump Pump B	1	15	1	15	12.75	88	11
13.13	Sump Pump C	1	30	1	30	25.5	89	22
13.13	Sump Pump D	1	15	1	15	12.75	88	11
13.13	Sump Pump E	1	30	1	30	25.5	89	22
13.13	Sump Pump F	1	7 ½	1	7.5	6.38	84	6
13.13	Sump Pump G	1	7 ½	1	7.5	6.38	84	6
	Total Clean Coal Facilities				1462.84			1015

NOTES:

(1) Operating BHP is assumed at 85% of total operating MHP.

TABLE 6 (Continued)

ELECTRICAL SUMMARY

PLANT 31

CONSUMED

PUMPS

ITEM NOS.	SERVICE	DESIGN HHP	PUMP EFF.%	DESIGN BHP	CONNECTED HP	MOTOR EFF.%	DESIGN KW	ON-STREAM FACTOR	AVERAGE DESIGN KW	% DESIGN ALLOWANCE	% OP. PWR. CREDIT	AVERAGE OP. KW
31G-101 A	Treated Boiler FW	50	78	65	75	90	54	1.0	54	-	-	54
" B	"	"	"	"	"	"	"	1.0	54	"	"	"
" C	"	"	"	"	"	"	"	0.0	0	"	"	0
31G-102 A	Demineralizer Feed	50	83	58	75	90	48	1.0	48	-	-	48
" B	"	"	"	"	"	"	"	1.0	48	"	"	48
" C	"	"	"	"	"	"	"	0.0	0	"	"	0
31G-103 A	Deaerator Feed	-	-	-	-	-	-	-	-	-	-	-
" B	"	78	80	98	125	92	80	1.0	80	-	-	80
" C	"	"	"	"	"	"	"	0.0	0	-	-	0
31G-104 A	900 psig BFW	-	-	-	-	-	-	-	-	-	-	-
" B	"	-	-	-	-	-	-	-	-	-	-	-
" C	"	757	77.8	973	1,250	95.0	764	1.0	764	20	10	688
31G-105 A	Suspect Condensate	54.6	80	70	75	90	58	1.0	58	-	-	58
" B	"	-	-	-	-	-	-	1.0	58	-	-	58
" C	"	-	-	-	-	-	-	0.0	0	-	-	0
31G-106 A	Hotwell Condensate	8.5	71	12	15	88	10	1.0	10	-	-	10
" B	"	"	"	"	"	"	"	1.0	10	-	-	10
" C	"	"	"	"	"	"	"	0.0	0	-	-	0
31G-107 A	Hotwell Condensate	8.5	71	12	15	88	10	1.0	10	-	-	10
" B	"	"	"	"	"	"	"	1.0	10	-	-	10
" C	"	"	"	"	"	"	"	0.0	0	-	-	0

TABLE 6 (Continued)

ELECTRICAL SUMMARY - PLANT 31 (cont.)

PUMPS ITEM NOS.	SERVICE	DESIGN HHP	PUMP EFF.%	DESIGN BHP	CONNECTED HP	MOTOR EFF.%	DESIGN KW	ON-STREAM FACTOR	AVERAGE DESIGN KW	% DESIGN ALLOWANCE	% OP.PWR. CREDIT	AVERAGE OP. KW
31G-108 A	Cooling Water	43	80	54	60	92	44	1.0	44	-	-	44
" B	"	"	"	"	"	"	"	1.0	44	-	-	44
" C	"	"	"	"	"	"	"	0.0	0	-	-	0
31G-109 A	150 psig BFW	-	-	-	-	-	-	-	-	-	-	-
" B	"	110.0	77	137	150	93.0	110	1.0	110	-	-	110
" C	"	"	"	"	"	"	"	0.0	0	-	-	0
31G-110 A	600 psig BFW	-	-	-	-	-	-	-	-	-	-	-
" B	"	219.0	73	300	350	94	238	1.0	228	-	-	228
" C	"	"	"	"	"	"	"	0.0	0	-	-	0
31G-111 A	Condenser Vacuum	-	-	35.0	75	90	29	0.0	0	-	-	0
" B	"	-	-	"	"	"	"	0.0	0	-	-	0
31G-112 A	Steam Air Heater Drain	0.6	30	2.0	3.0	82	2	1.0	2	-	-	2
" B	"	"	"	"	"	"	"	0.0	0	-	-	0
31G-113 A	Steam Air Heater Drain	"	"	"	"	"	2	1.0	2	-	-	2
" B	"	"	"	"	"	"	"	0.0	0	-	-	0
31G-114 A	Steam Air Heater Drain	"	"	"	"	"	2	1.0	2	-	-	2
" B	"	"	"	"	"	"	"	0.0	0	-	-	0
31G-115 A	Steam Air Heater Drain	"	"	"	"	"	2	1.0	2	-	-	2
" B	"	"	"	"	"	"	"	0.0	0	-	-	0
31G-116 A	Cond. Flash Drum Drain	3.0	62	5	10	88	4	1.0	4	-	-	4
" B	"	"	"	"	"	"	4	1.0	4	-	-	4
" C	"	"	"	"	"	"	"	0.0	0	-	-	0

TABLE 6 (Continued)

ELECTRICAL SUMMARY - PLANT 31 (cont.)

PUMPS ITEM NOS.	SERVICE	DESIGN HHP	PUMP EFF.%	DESIGN BHP	CONNECTED HP	MOTOR EFF.%	DESIGN KW	ON-STREAM FACTOR	AVERAGE DESIGN KW	% DESIGN ALLOWANCE	% OP.PWR. CREDIT	AVERAGE OP. KW
31G-117 A	BD Flash Drum Drain	3.4	65	5.5	10.0	88	5	1.0	5	-	-	5
" B	"	"	"	"	"	"	"	1.0	5	-	-	5
" C	"	"	"	"	"	"	"	0.0	5	-	-	0
31G-118 A	ATM Blowoff Drain	2.5	60	5.0	10.0	88	4	1.0	4	-	-	4
" B	"	"	"	"	"	"	"	1.0	4	-	-	4
" C	"	"	"	"	"	"	"	0.0	0	-	-	0
" D	"	"	"	"	"	"	"	0.0	0	-	-	0
31G-119 A	Na Softener Booster	17.0	75.0	23	25	90	19	1.0	19	-	-	19
" B	"	"	"	"	"	"	"	0.0	0	-	-	0
" C	"	"	"	"	"	"	"	0.0	0	-	-	0
31G-120 A	Na Soft. Regen. Brine	10	65	15	20	89	13	0.1	1	-	-	1
" B	"	"	"	"	"	"	"	0.0	0	-	-	0
31G-121 A	Conveyor Recirc.	17.0	72	24	30	90	20	0.15	3	-	-	3
" B	"	"	"	"	"	"	"	0.0	0	-	-	0
31G-122 A	Continuous Recirc.	67.8	76	90	125	93	72	1.0	72	-	-	72
" B	"	"	"	"	"	"	"	0.0	0	-	-	0
31G-123	DW Bin Area Seal H_2O Booster	10.0	59	18	20	90	15	1.0	15	-	-	15
31G-124 A	Dewater. Area Sump	7.5	54	14	20	90	12	0.15	2	-	-	2
" B	"	"	"	"	"	"	"	0.0	0	-	-	0
31G-125 A	Sludge Return	7.4	57	13	15	88	11	0.5	6	-	-	6
" B	"	"	"	"	"	"	"	0.0	0	-	-	0
31G-126 A	"	15	26	58	75	92	47	0.15	30	-	-	30
" B	"	"	"	"	"	"	"	0.0	0	-	-	0

TABLE 6 (Continued)

ELECTRICAL SUMMARY - PLANT 31 (cont.)

PUMPS

ITEM NOS.	SERVICE	DESIGN HHP	PUMP EFF.%	DESIGN BHP	CONNECTED HP	MOTOR EFF.%	DESIGN KW	ON-STREAM FACTOR	AVERAGE DESIGN KW	% DESIGN ALLOWANCE	% OP.PWR. CREDIT	AVERAGE OP. KW
31G-127 A	Boiler Area Ash Sump	15	26	58	75	92	47	0.15	30	-	-	30
" B	"	"	"	"	"	"	"	0.0	0	-	-	0
31G-128 A	Boiler Area Ash Sump	"	"	"	"	"	"	0.15	30	-	-	30
" B	"	"	"	"	"	"	"	0.0	0	-	-	0
31G-129 A	Boiler Area Ash Sump	"	"	"	"	"	"	0.15	30	-	-	30
" B	"	"	"	"	"	"	"	0.0	0	-	-	0
31G-130 A	Seal Water	2.7	25	11	15	88	9	1.0	6	-	-	6
" B	"	"	"	"	"	"	"	0.0	0	-	-	0
31G-131 A	Seal Water	"	"	"	"	"	"	1.0	6	-	-	6
" B	"	"	"	"	"	"	"	0.0	0	-	-	0
31G-132 A	Seal Water	"	"	"	"	"	"	1.0	6	-	-	6
" B	"	"	"	"	"	"	"	0.0	0	-	-	0
31G-133 A	Seal Water	"	"	"	"	"	"	1.0	6	-	-	6
" B	"	"	"	"	"	"	"	0.0	0	-	-	0
31G-134 A	Ash Sluice Water Booster	5.8	66	8	10	87	7	0.05	4	-	-	4
" B	"	"	"	"	"	"	"	0.05	4	-	-	4
" C	"	"	"	"	"	"	"	0.0	0	-	-	0
31G-135 A	Ash Sluice Water Booster	5.8	66	8	10	87	7	0.05	4	-	-	4
" B	"	"	"	"	"	"	"	0.05	4	-	-	4
" C	"	"	"	"	"	"	"	0.0	0	-	-	0
31G-136 A	Ash Sluice Water Booster	"	"	"	"	"	"	0.05	4	-	-	4
" B	"	"	"	"	"	"	"	0.05	4	-	-	4
" C	"	"	"	"	"	"	"	0.0	0	-	-	0

TABLE 6 (Continued)

ELECTRICAL SUMMARY - PLANT 31 (cont.)

PUMPS ITEM NOS.	SERVICE	DESIGN HHP	EFF.%	DESIGN BHP	CONNECTED HP	MOTOR EFF.%	DESIGN KW	ON-STREAM FACTOR	AVERAGE DESIGN KW	% DESIGN ALLOWANCE	% OP.PWR. CREDIT	AVERAGE OP. KW
31G-137 A	Ash Sluice Water Booster	5.8	66	8	10	87	7	0.05	4	-	-	4
" B	"	"	"	"	"	"	"	0.05	4	-	-	4
" C	"	"	"	"	"	"	"	0.0	0	-	-	0
31G-138 A	Bottom Ash	18.0	56	32	40	90	27	0.15	4	-	-	4
" B	"	"	"	"	"	"	"	0.0	0	-	-	0
31G-139 A	Bottom Ash	"	"	"	"	"	"	0.15	4	-	-	4
" B	"	"	"	"	"	"	"	0.0	0	-	-	0
31G-140 A	Bottom Ash	"	"	"	"	"	"	0.15	4	-	-	4
" B	"	"	"	"	"	"	"	0.0	0	-	-	0
31G-141 A	Bottom Ash	"	"	"	"	"	"	0.15	4	-	-	4
" B	"	"	"	"	"	"	"	0.0	0	-	-	0
31G-142	Fire Water Booster	5.8	67	8.7	10	87	7	0.0	0	-	-	0
					TOTAL PUMPS							1,898
BLOWERS												
31K-101 A	Induced Draft	-	-	510	600	94	405	0	0	-	-	0
" B	(1.6 mm #/hr)	-	-	"	"	"	"	0	0	-	-	0
" C	"	-	-	"	"	"	"	0	0	-	-	0
" D	"	-	-	"	"	"	"	0	0	-	-	0
31K-102 A	Forced Draft	-	-	425	500	94	337	0	0	-	-	0
" B	"	-	-	"	"	"	"	0	0	-	-	0
" C	"	-	-	"	"	"	"	0	0	-	-	0
" D	"	-	-	"	"	"	"	0	0	-	-	0

TABLE 6 (Continued)

ELECTRICAL SUMMARY - PLANT 31 (cont.)

BLOWERS ITEM NOS.	SERVICE	DESIGN HHP	EFF.%	DESIGN BHP	CONNECTED HP	MOTOR EFF.%	DESIGN KW	ON-STREAM FACTOR	AVERAGE DESIGN KW	% DESIGN ALLOWANCE	% OP.PWR. CREDIT	AVERAGE OP. KW
31K-103 A	Transport Blower	-	-	170	200	93	136	0.25	34	-	-	34
" B	"	"	"	"	"	"	"	0.0	0	-	-	0
" C	"	"	"	"	"	"	"	0.25	34	-	-	34
" D	"	"	"	"	"	"	"	0.0	0	-	-	0
" E	"	"	"	"	"	"	"	0.25	34	-	-	34
" F	"	"	"	"	"	"	"	0.0	0	-	-	0
" G	"	"	"	"	"	"	"	0.25	34	-	-	34
" H	"	"	"	"	"	"	"	0.0	0	-	-	0
31K-104 A	Seal Air Booster Blower	-	-	1.7	2	80	2	1.0	2	-	-	2
" B	"	-	-	"	"	"	"	0.0	0	-	-	0
" C	"	-	-	"	"	"	"	1.0	2	-	-	2
" D	"	-	-	"	"	"	"	0.0	0	-	-	0
" E	"	-	-	"	"	"	"	1.0	2	-	-	2
" F	"	-	-	"	"	"	"	0.0	0	-	-	0
" G	"	-	-	"	"	"	"	1.0	2	-	-	2
" H	"	-	-	"	"	"	"	0.0	0	-	-	0
31K-105 A	Aeration Blower	-	-	170	200	93	136	1.0	136	-	-	136
" B	"	-	-	"	"	"	"	0.0	0	-	-	0
31K-106 A	Truck Chute Exhaust Fan	-	-	4	5	84	4	1.0	4	-	-	4
" B	"	-	-	"	"	"	"	0.0	0	-	-	0
						TOTAL BLOWERS						284

TABLE 6 (Continued)

ELECTRICAL SUMMARY - PLANT 31 (cont.)

SPECIAL EQUIPMENT ITEM NOS.	SERVICE	DESIGN HHP	EFF.%	DESIGN BHP	CONNECTED HP	MOTOR EFF.%	DESIGN KW	ON-STREAM FACTOR	AVERAGE DESIGN KW	% DESIGN ALLOWANCE	% OP.PWR. CREDIT	AVERAGE OP. KW
SPECIAL EQUIPMENT												
31T-101 A	Coal Belt Conv.	-	-	42.5	50	91	35	0.25	9	-	-	9
" B	"	-	-	"	"	"	"	0.25	9	-	-	9
31T-102 A	Coal Dust Collector	-	-	12.75	15	88	11	0.5	6	-	-	6
" B	"	-	-	"	"	"	"	0.05	1	-	-	1
" C	"	-	-	"	"	"	"	0.05	1	-	-	1
" D	"	-	-	"	"	"	"	0.05	1	-	-	1
" E	"	-	-	"	"	"	"	0.05	1	-	-	1
31T-104 A	Coal Pulverizer Feeder	-	-	4	5	80	4	1.0	4	-	-	4
" B	"	-	-	"	"	"	"	1.0	4	-	-	4
" C	"	-	-	"	"	"	"	0.0	0	-	-	0
" D	"	-	-	"	"	"	"	1.0	4	-	-	4
" E	"	-	-	"	"	"	"	1.0	4	-	-	4
" F	"	-	-	"	"	"	"	0.0	0	-	-	0
" G	"	-	-	"	"	"	"	1.0	4	-	-	4
" H	"	-	-	"	"	"	"	1.0	4	-	-	4
" I	"	-	-	"	"	"	"	0.0	0	-	-	0
" J	"	-	-	"	"	"	"	1.0	4	-	-	4
" K	"	-	-	"	"	"	"	1.0	4	-	-	4
" L	"	-	-	"	"	"	"	0.0	0	-	-	0
31Y-101 A	Pulverizers	-	-	297.5	350	93	239	1.0	239	33.3	16.7	199
" B	"	-	-	"	"	"	"	1.0	239	"	"	199
" C	"	-	-	"	"	"	"	0.0	0	-	-	-

TABLE 6 (Continued)

ELECTRICAL SUMMARY - PLANT 31 (cont.)

SPECIAL EQUIPMENT ITEM NOS.	SERVICE	DESIGN HHP	EFF.%	DESIGN BHP	CONNECTED HP	MOTOR EFF.%	DESIGN KW	ON-STREAM FACTOR	AVERAGE DESIGN KW	% DESIGN ALLOWANCE	% OP.PWR. CREDIT	AVERAGE OP. KW
31Y-102 A	Pulverizers	-	-	297.5	350	93	239	1.0	239	33.3	16.7	199
" B	"	-	-	"	"	"	"	1.0	239	"	"	199
" C	"	-	-	"	"	"	"	0.0	0	-	-	-
31Y-103 A	"	-	-	"	"	"	"	1.0	239	33.3	16.7	199
" B	"	-	-	"	"	"	"	1.0	239	33.3	16.7	199
" C	"	-	-	"	"	"	"	0.0	0	-	-	-
31Y-104 A	"	-	-	"	"	"	"	1.0	239	33.3	16.7	199
" B	"	-	-	"	"	"	"	1.0	239	33.3	16.7	199
" C	"	-	-	"	"	"	"	0.0	0	-	-	-
31Y-105 A	Electro Precip.	-	-	354	416	94	281	1.0	281	-	-	281
" B	"	-	-	"	"	"	"	"	"	-	-	"
" C	"	-	-	"	"	"	"	"	"	-	-	"
" D	"	-	-	"	"	"	"	"	"	-	-	"
-	Boiler Accessories	-	-	170	200	0.93	68	1.0	68	-	-	68
-	Turb & AC Controls	-	-	327	385	0.93	262	1.0	262	-	-	262
	TOTAL SPECIAL EQUIPMENT											3,106
	TOTAL PLANT CONSUMPTION											5,288

TABLE 6 (Continued)

ELECTRICAL SUMMARY

PLANT 31

ELECTRICAL SUMMARY - PLANT 31 (cont.)

B. GENERATED

	TOTAL GENERATED KW
Plant 31 Turbine Generators	36,964

C. NET OPERATING KW

Total Plant Consumption	5,288
Total Plant Generation	36,964
Net Plant Consumption	-31,676

TABLE 6 (Continued)

ELECTRICAL SUMMARY

PLANT 32

CONSUMED PUMPS ITEM NO.	SERVICE	OPERATING BHP	CONNECTED HP	MOTOR EFF.%	OPERATING KW	ON-STREAM FACTOR	AVERAGE OP. KW
32G-101A	Cooling Water	2352	3000	94	1866	1.0	1866
" B	"	"	"	"	"	1.0	1866
" C	"	"	"	"	"	1.0	1866
" D	"	"	"	"	"	0.0	0
32G-102A	Cooling Water	2532	3000	94	2010	1.0	2010
" B	"	"	"	"	"	1.0	2010
" C	"	"	"	"	"	1.0	2010
" D	"	"	"	"	"	0.0	0
32G-112A	Backwash Sump Pump	4.8	7.5	85	4	0.6	2
" B	"	"	"	"	"	0.0	0
32G-113A	Cooling Water Sidestream Return	200	250	91	164	1.0	164
" B	"	"	"	"	"	0.0	0
32G-114A	Recycle Water To Softener	4.0	7.5	85	4	1.0	4
" B	"	"	"	"	"	0.0	0
32G-115A	Backwash Water Supply	42.2	60	89	36	0.3	11
" B	"	"	"	"	"	0.0	0
32G-121A	Filter Feed Pumps	7.0	10	85	6	1.0	6
" B	"	"	"	"	"	1.0	6
" C	"	"	"	"	"	1.0	6
" D	"	"	"	"	"	0.0	0
32G-151A	Dispersing Agent L.S.C.T.	-	0.25	-	NIL	1.0	NIL
" B	"	-	"	-	NIL	0.0	0

TABLE 6 (Continued)

ELECTRICAL SUMMARY

PLANT 32 (CONT')

CONSUMED PUMPS ITEM NO.	SERVICE	OPERATING BHP	CONNECTED HP	MOTOR EFF.%	OPERATING KW	ON-STREAM FACTOR	AVERAGE OP. KW
32G-152A	Inhibitor L.S.C.T.	-	0.25	-	NIL	1.0	NIL
" B	"	-	"	-	"	0.0	0
32G-153A	Acid L.S.C.T.	-	"	-	"	1.0	NIL
" B	"	-	"	-	"	0.0	0
32G-161A	Dispersing Agent H.S.C.T.	-	"	-	"	1.0	NIL
" B	"	-	"	-	"	0.0	0
32G-162A	Inhibitor H.S.C.T.	-	"	-	"	1.0	NIL
" B	"	-	"	-	"	0.0	0
32G-163A	Acid H.S.C.T.	-	"	-	"	1.0	NIL
" B	"	-	"	-	"	0.0	0
32G-164A	Lime Feed Pump	2.6	3	82	3	1.0	3
" B	"	-	"	82	3	0.0	0
32G-165A	Soda Ash Feed Pump	0.85	1	80	1	1.0	1
" B	"	-	"	80	1	0.0	0
32G-166A	Alum Feed Pump	1.7	2	-	2	1.0	2
" B	"	"	"	-	"	0.0	0
32G-167A	Polyelectrolyte Feed Pump	1.7	2	-	2	1.0	2
" B	"	"	"	-	"	0.0	0
32G-168A	Raw Water Intake	92	100	91	75	1.0	75
" B	"	"	"	"	"	1.0	75
" C	"	"	"	"	"	1.0	75
" D	"	"	"	"	"	0.0	0
" E	"	"	"	"	"	0.0	0
" F	"	"	"	"	"	0.0	0

TABLE 6 (Continued)

ELECTRICAL SUMMARY

PLANT 32 (CONT')

CONSUMED PUMPS ITEM NO.	SERVICE	OPERATING BHP	CONNECTED HP	MOTOR EFF.%	OPERATING KW	ON-STREAM FACTOR	AVERAGE OP. KW
32G-169A	Lime Slurry Feed Pump	-	0.5	-	NIL	1.0	NIL
" B	"	-	"	-	"	1.0	"
" C	"	-	"	-	"	1.0	"
" D	"	-	"	-	"	0.0	0
" E	"	-	"	-	"	0.0	0
32G-170A	Polymer Transfer Pump	-	0.75	-	"	1.0	NIL
" B	"	-	"	-	"	0.0	0
32G-171A	Polymer Feed Pump	-	0.75	-	"	1.0	NIL
" B	"	-	"	-	"	1.0	"
" C	"	-	"	-	"	1.0	"
" D	"	-	"	-	"	0.0	0
" E	"	-	"	-	"	0.0	0
32G-172A	Soda Ash Feed Pump	-	0.75	-	"	1.0	NIL
" B	"	-	"	-	"	1.0	"
" C	"	-	"	-	"	1.0	"
" D	"	-	"	-	"	0.0	0
" E	"	-	"	-	"	0.0	0
32G-173A	Alum Feed Pump	-	0.75	-	"	1.0	NIL
" B	"	-	"	-	"	1.0	"
" C	"	-	"	-	"	1.0	"
" D	"	-	"	-	"	0.0	0
" E	"	-	"	-	"	0.0	0

TABLE 6 (Continued)

ELECTRICAL SUMMARY

PLANT 32 (CONT')

CONSUMED PUMPS ITEM NO.	SERVICE	OPERATING BHP	CONNECTED HP	MOTOR EFF.%	OPERATING KW	ON-STREAM FACTOR	AVERAGE OP. KW
32G-174A	Reactor Clarifier Sludge Pumps	10	15	89	9	1.0	9
" B	"	"	"	"	"	1.0	9
" C	"	"	"	"	"	1.0	9
" D	"	"	"	"	"	0.0	0
32G-175A	Acid Feed Pump	-	0.25	-	-	1.0	NIL
" B	"	-	"	-	-	0.0	0
32G-176A	Filter Feed Pump	13	20	85	11	1.0	11
" B	"	"	"	"	"	1.0	11
" C	"	"	"	"	"	0.0	0
32G-177A	Filter Backwash Pump	10	15	85	9	0.5	4
" B	"	"	"	"	"	0.0	0
32G-178A	Filter Feed Pumps	210	250	91	172	1.0	172
" B	"	"	"	"	"	0.0	0
" C	"	"	"	"	"	0.0	0
32G-179A	Filter Backwash Pumps	65	100	91	54	0.5	27
" B	"	"	"	"	"	0.0	0
32G-180A	Vacuum Filter Feed Pump	12	15	85	10	1.0	10
" B	"	"	"	"	"	1.0	10
32G-181A	Vacuum Filtrate Pump	5	7.5	55	4.0	1.0	4
32G-182A	Utility Water Pump	511	600	92	415	1.0	415
" B	"	"	"	"	"	0.0	0

TABLE 6 (Continued)

ELECTRICAL SUMMARY

PLANT 32 (CONT')

CONSUMED PUMPS ITEM NO.	SERVICE	OPERATING BHP	CONNECTED HP	MOTOR EFF.%	OPERATING KW	ON-STREAM FACTOR	AVERAGE OP. KW
32H-103A	Vacuum Pump	4.3	5	83	4	1.0	4
" B	"	"	"	"	"	1.0	4
" C	"	"	"	"	"	0.0	0
32H-104	Vacuum Pump	4.3	5	83	4	1.0	4
	Total Pumps						12,763
SPECIAL EQUIPMENT							
32T-101A	Cake Conveyor	1.7	2	80	2	1.0	2
" B	"	1.7	2	80	"	0.0	0
32T-102	Filter Cake Conveyor	1.7	2	80	2	1.0	2
32Z-103	Reactor Clarifier	4.3	5	83	4	1.0	4
32Z-104A	Vacuum Filter	1.7	2	80	2	1.0	2
" B	"	"	"	"	"	1.0	2
" C	"	"	"	"	"	0.0	0
32Z-105A	Travelling Screen	1.7	20	88	14	1.0	14
" B	"	"	"	"	"	0.0	0
32Z-107A	Clarifier	4.3	5	83	4	1.0	4
" B	"	"	"	"	"	1.0	4
" C	"	"	"	"	"	1.0	4
" D	"	"	"	"	"	0.0	0
32Z-108A	Vacuum Filters	1.7	2	80	2	1.0	2
" B	"	"	"	"	"	1.0	2

TABLE 6 (Continued)

ELECTRICAL SUMMARY

PLANT 32 (CONT')

CONSUMED ITEM NO.	CONSUMED SERVICE	OPERATING BHP	CONNECTED HP	MOTOR EFF.%	OPERATING KW	ON-STREAM FACTOR	AVERAGE OP. KW
32D-126	Mixer	0.85	1	80	1	1.0	1
32D-127	Mixer	0.85	1	80	1	1.0	1
32D-128	Mixer	0.85	1	80	1	1.0	1
32D-129	Mixer	0.85	1	80	1	1.0	1
32D-133A	Polymer Mixing Tank Mixer	0.43	0.5	70	NIL	1.0	NIL
" B	"	"	"	"	"	0.0	0
	Total Special Equipment						46

BLOWERS ITEM NO.	SERVICE	OPERATING BHP/EACH	CONNECTED HP EACH	CONNECTED HP TOTAL	MOTOR EFF.%	OPERATING KW/EACH	ON-STREAM FACTOR	AVERAGE OP. KW EACH	AVERAGE OP. KW TOTAL
32K-101A Thru K	Low Solids Cooling Tower Fans	170.0	200	2,200	93	136	0.5	68	748
32K-102A Thru K	High Solids Cooling Tower Fans	212.5	250	2,750	93	170	0.5	85	935
32K-103A	Anthracite Filter Backwash Blower	15.0	20	20	85	13	0.5	7	7
" B	"	"	"	20	"	"	0.0	0	0
32K-104A	Dual Media Filter Backwash Blower	50.0	75	75	89	42	0.5	21	21
" B,C	"	"	"	150	"	"	0.0	0	0
	TOTAL BLOWERS								1,711

TOTAL PLANT CONSUMPTION = 14,520

TABLE 6 (Continued)

ELECTRICAL SUMMARY

PLANT 33

CONSUMED

PUMPS

ITEM NO.	SERVICE	DESIGN HHP	PUMP EFF.%	DESIGN BHP @110% capacity	CONNECTED HP	MOTOR EFF.%	OPERATING KW	ON-STREAM FACTOR	AVERAGE OP. KW
33G-101	Fire Water Main Pump	392	78	503	600	93	403	0.01	4
33G-103	" "	394	82	480.5	600	93	385	0.01	4
33G-105 A	" "	31	71	43.7	50	89	37	1.0	37
" B	" "	"	"	"	"	"	"	0.0	0
									45
	5% credit for 110% average design capacity								- 2
	TOTAL PUMPS								43
	TOTAL PLANT CONSUMPTION								43

TABLE 6 (Continued)

ELECTRICAL SUMMARY

PLANT 34

CONSUMED PUMPS ITEM NO.	SERVICE	OPERATING HHP	PUMP EFF.%	OPERATING BHP	CONNECTED HP	MOTOR EFF.%	OPERATING KW	ON-STREAM FACTOR	AVERAGE OP. KW
34G-101 A	CSP run-off treatment - Surge Basin Lift Pump	2.1	87	2.5	3	83	2.25	0.1	NIL
34G-101 B	" "	2.1	87	2.5	3	83	2.25	0.1	NIL
34G-102	CSP run-off treatment - Polymer Feed Pump	.09	75	.12	3/4	71	.13	0.1	NIL
34G-103	CSP run-off treatment - Soda Ash Feed Pump	.007	75	.01	1/4	71	.01	0.1	NIL
34G-104 A	CSP run-off treatment - Sludge Pump	.35	70	1/2	3/4	71	.53	0.1	1
34G-104 B	" "	.35	70	1/2	3/4	71	.53	0.0	0
34G-105 A	CSP run-off treatment - Clarified Effluent Pump	7.3	73	10	15	87	8.6	0.1	1
34G-105 B	" "	7.3	73	10	15	87	8.6	0.1	1
34G-106	CSP run-off treatment - Filtered Backwash Pump	3.52	70	5	7½	85	4.4	0.05	NIL
34G-107 A	Sanitary Sewage Treatment Lift Pump	5.83	83	7	10	87	6	0.8	5
34G-107 B	" "	5.83	83	7	10	87	6	0.2	1
34G-108	Sanitary Sewage Treatment - Froth Spray Feed Pump	.12	50	.23	3/4	71	.25	0.5	NIL
34G-109	Sanitary Sewage Treatment - Digested Sludge Draw-off Pump	.15	58	1/4	1/2	71	.27	0.5	NIL
34G-110 A	Oily W.T.Syst. - Surge/Equal. Basin Lift Pumps	4.16	50	7	10	87	6.00	0.30	2
34G-110 B	" "	4.16	50	7	10	87	6.00	0.10	1
34G-111 A	Oily W.T.Syst. - Alum.Feed Pump	0.25	75	NIL	1/4	71	NIL	1.0	NIL
34G-111 B	" "	0.25	75	NIL	1/4	71	NIL	0.0	0

TABLE 6 (Continued)

ELECTRICAL SUMMARY - PLANT 34 (cont.)

CONSUMED

PUMPS

ITEM NO.	SERVICE	OPERATING HHP	PUMP EFF.%	OPERATING BHP	CONNECTED HP	MOTOR EFF.%	OPERATING KW	ON-STREAM FACTOR	AVERAGE OP. KW
34G-112 A	Oily W.T. Syst. Oil Transfer Pump	8.75	75	11.66	15	87	10	1.0	10
34G-112 B	" "	8.75	75	11.66	15	87	10	0.0	0
34G-113 A	Oily W.T. Syst. - Polymer Feed Pump	.26	75	.35	3/4	71	.37	1.0	NIL
34G-113 B	" "	.26	75	.35	3/4	71	.37	0.0	0
34G-114 A	Oily W.T. Syst. - Caustic Soda Feed Pump	.09	75	.12	3/4	71	.13	1.0	NIL
34G-114 B	" "	.09	75	.12	3/4	71	.13	0.0	0
34G-115 A	Oily W.T. Syst. - Skimmed Oil Pump	.75	75	1	1½	78	.96	1.0	1
34G-115 B	" "	.75	75	1	1½	78	.96	0.0	0
34G-116 A	Oily W.T. Syst. API Separator Sludge Pump	-	-	1	1½	78	.96	1.0	1
34G-116 B	" "	-	-	1	1½	78	.96	0.0	0
34G-117 A	Oily W.T. Syst. API Separator Effluent Pump	15	75	20	25	87	17.15	1.0	17
34G-117 B	" "	15	75	20	25	87	17.15	1.0	17
34G-117 C	" "	15	75	20	25	87	17.15	0.0	0
34G-118 A	Oily W.T. Syst. - Acid Feed Pump	.044	75	0.59	1/4	71	.06	1.0	NIL
34G-118 B	" "	.044	75	0.59	1/4	71	.06	0.0	0
34G-119 A	Oily W.T. Syst. - Pressurizing Pump	18.75	75	25	30	89	21	1.0	21
34G-119 B	" "	18.75	75	25	30	89	21	1.0	21
34G-119 C	" "	18.75	75	25	30	89	21	0.0	0

TABLE 6 (Continued)

ELECTRICAL SUMMARY - PLANT 34 (cont.)

CONSUMED

PUMPS

ITEM NO.	SERVICE	OPERATING HHP	PUMP EFF.%	OPERATING BHP	CONNECTED HP	MOTOR EFF.%	OPERATING KW	ON-STREAM FACTOR	AVERAGE OP. KW
34G-120 A	Oily W.T. Syst. - DAF Bottom Sludge Pump	.375	75	1/2	3/4	71	.53	1.0	1
34G-120 B	" "	.375	75	1/2	3/4	71	.53	0.0	0
34G-121 A	Oily W.T. Syst. - Oily Sludge Sump Pump	2.25	75	3	5	84	2.67	1.0	3
34G-121 B	" "	2.25	75	3	5	84	2.67	0.0	0
34G-122 A	Deoiled W.T. Syst. - Clarifier Sludge Pump	30	75	40	50	88	34	1.0	34
34G-122 B	" "	30	75	40	50	88	34	0.0	0
34G-123 A	Deoiled W.T. Syst. - Thickener Sludge Pump	.375	.75	1/2	3/4	71	.53	1.0	1
34G-123 B	" "	.375	.75	1/2	3/4	71	.53	0.0	0
34G-124 A	Deoiled W.T. Syst. Polymer Feed Pump	.375	.75	1/2	3/4	71	.53	1.0	1
34G-124 B	" "	.375	.75	1/2	3/4	71	.53	0.0	0
34G-125 A	Deoiled W.T. Syst. - Filtered Feed Pump	37.5	75	50	60	91	41	1.0	41
34G-125 B	" "	37.5	75	50	60	91	41	1.0	41
34G-125 C	" "	37.5	75	50	60	91	41	0.0	0
34G-126 A	Deoiled W.T. Syst. - Filter Backwash Pump	7.5	75	10	15	87	8.6	0.5	4
34G-126 B	" "	7.5	75	10	15	87	8.6	0.0	0
34G-127 A	Stripped/Extracted Sour W.T. Pac Feed Pump	.375	75	1/2	3/4	71	.53	1.0	1
34G-127 B	" "	.375	75	1/2	3/4	71	.53	0.0	0
34G-128 A	Stripped/Extracted Sour W.T. Sludge Recycle Pump	56.25	75	75	100	92	60.8	1.0	61

TABLE 6 (Continued)

ELECTRICAL SUMMARY - PLANT 34 (cont.)

CONSUMED

PUMPS

ITEM NO.	SERVICE	OPERATING HHP	PUMP EFF.%	OPERATING BHP	CONNECTED HP	MOTOR EFF.%	OPERATING KW	ON-STREAM FACTOR	AVERAGE OP. KW
34G-128 B	Stripped/Extracted Sour W.T. Recycle Pump	56.25	75	75	100	92	60.8	0.0	0
34G-129 A	Stripped/Extracted Sour W.T. Waste Sludge Pump	5.6	75	7.5	10	87	7	1.0	7
34G-129 B	" "	5.6	75	7.5	10	87	7	0.0	0
34G-130 A	Stripped/Extracted Sour W.T. Polymer Feed Pump	.375	75	1/2	3/4	71	.53	1.0	1
34G-130 B	" "	.375	75	1/2	3/4	71	.53	0.0	0
34G-131 A	Stripped/Extracted Sour W.T. Filter Feed Pump	37.5	75	50	60	91	41	1.0	41
34G-131 B	" "	37.5	75	50	60	91	41	0.0	0
34G-132 A	Stripped/Extracted Sour W.T. Filter Backwash Pump	7.5	75	10	15	87	9	0.5	4
34G-132 B	" "	7.5	75	10	15	87	9	0.0	0
34G-133 A	Stripped/Extracted Sour W.T. Cartridge Filter Pump	67.5	75	90	150	92	73	1.0	73
34G-133 B	" "	67.5	75	90	150	92	73	0.0	0
34G-134 A	Stripped/Extracted Sour W.T. R. O. Feed Pump	62.9	42	150	200	92	121.6	1.0	122
34G-134 B	" "	"	"	"	"	"	"	"	"
34G-134 C	" "	"	"	"	"	"	"	"	"
34G-134 D	" "	"	"	"	"	"	"	"	"
34G-134 E	" "	"	"	"	"	"	"	"	"
34G-134 F	" "	"	"	"	"	"	"	"	"
34G-134 G	" "	"	"	"	"	"	"	0.0	0

TABLE 6 (Continued)

ELECTRICAL SUMMARY - PLANT 34 (cont.)

CONSUMED

PUMPS

ITEM NO.	SERVICE	OPERATING HHP	PUMP EFF.%	OPERATING BHP	CONNECTED HP	MOTOR EFF.%	OPERATING KW	ON-STREAM FACTOR	AVERAGE OP. KW
34G-135	Stripped/Extracted Sour W.T. Sodium Bisulfite Transfer Pump	.15	75	.19	1/4	71	.21	0.5	NIL
34G-136 A	Stripped/Extracted Sour W.T. Sodium Bisulfite Feed Pump	.03	75	.04	1/4	71	.05	1.0	NIL
34G-136 B	" "	.03	75	.04	1/4	71	.05	0.0	0
34G-137	Stripped/Extracted Sour W.T. Polyphosphate Transfer Pump	.15	75	.19	1/4	71	.21	0.5	NIL
34G-138 A	Stripped/Extracted Sour W.T. Polyphosphate Feed Pump	.03	75	.04	1/4	71	.05	1.0	NIL
34G-138 B	" "	.03	75	.04	1/4	71	.05	0.0	0
34G-139 A	Stripped/Extracted Sour W.T. Acid Feed Pump	.008	75	.01	1/4	71	.01	1.0	NIL
34G-139 B	" "	.008	75	.01	1/4	71	.01	0.0	0
34G-140 A	Brine Conc.,Evap. & Residue Drying Filter Feed Pump	15.7	79	19.93	25	88	16.9	1.0	17
34G-140 B	" "	15.7	79	19.93	25	88	16.9	0.0	0
34G-141	Brine Conc.,Evap. & Residue Drying Polymer Feed Pump	.03	75	.04	1/2	71	.04	0.5	0
34G-142	Brine Conc.,Evap & Residue Drying Injection Pump	.73	33	2.2	3	81	2.03	1.0	2
34G-143	Brine Conc.,Evap. & Residue Drying Filter Backwash Pump	5.3	73	7.5	10	87	6.0	0.5	3
34G-144 A	Brine Conc.,Evap & Residue Drying R.O. Low Pressure Feed Pump	7.9	75	10.5	15	87	9	1.0	9
34G-144 B	" "	7.9	75	10.5	15	87	9	1.0	9

TABLE 6 (Continued)

ELECTRICAL SUMMARY - PLANT 34 (cont.)

CONSUMED

PUMPS

ITEM NO.	SERVICE	OPERATING HHP	PUMP EFF.%	OPERATING BHP	CONNECTED HP	MOTOR EFF.%	OPERATING KW	ON-STREAM FACTOR	AVERAGE OP. KW
34G-145	Brine Conc.Evap.& Residue Drying Sulfuric Acid Feed Pump	.03	75	.033	1/4	71	.035	1.0	NIL
34G-146	Brine Conc.,Evap.& Residue Drying Sodium Bisulfite Feed Pump	.005	75	.006	1/4	71	.006	0.5	NIL
34G-147	Brine Conc.,Evap.& Residue Drying $NaPO_4$ Feed Pump	.014	75	.018	1/4	71	.019	1.0	NIL
34G-148 A	Brine Conc.Evap.& Residue Drying R.O. High Pressure Feed Pump	69.3	46	150	200	92	121.6	1.0	122
34G-148 B	" "	"	"	"	"	"	"	"	"
34G-148 C	" "	"	"	"	"	"	"	"	"
34G-148 D	" "	"	"	"	"	"	"	"	"
34G-149 A	Brine Conc.Evap.& Residue Drying Vice Feed Pump	13.8	63	22	40	90	18.24	1.0	18
34G-149 B	" "	"	"	"	"	"	"	1.0	18
34G-150 A	Brine Conc.Evap.& Residue Drying Brine Recirculation Pump	78.3	93	85	100	92	71	1.0	71
34G-150 B	" "	"	"	"	"	"	"	1.0	71
34G-151 A	Brine Conc.Evap.& Residue Drying Distillate Pump	6.5	43	15	20	87	13	1.0	13
34G-151 B	" "	"	"	"	"	"	"	1.0	13
34G-152 A	Brine Conc.Evap.& Residue Drying Dryer Feed Pump	1.58	31	5	7.5	84	4	1.0	4
34G-152 B	" "	"	"	"	"	"	"	0.0	0
34G-153 A	Brine Conc.Evap. & Residue Drying VCE Feed Pump	13.8	61	22.5	40	90	19	1.0	19
34G-153 B	" "	"	"	"	"	"	"	1.0	19

TABLE 6 (Continued)

ELECTRICAL SUMMARY - PLANT 34 (cont.)

CONSUMED

PUMPS

ITEM NO.	SERVICE	OPERATING HHP	PUMP EFF.%	OPERATING BHP	CONNECTED HP	MOTOR EFF.%	OPERATING KW	ON-STREAM FACTOR	AVERAGE OP. KW
34G-154 A	Brine Conc.Evap.& Residue Drying Brine Recirculation Pump	78.9	93	85	100	92	71	1.0	71
34G-154 B	" "	"	"	"	"	"	"	"	"
34G-155 A	Brine Conc.Evap.& Residue Drying Distillate Pump	6.5	43	15	20	87	12.9	1.0	13
34G-155 B	" "	"	"	"	"	"	"	"	"
34G-156	Brine Conc.Evap.& Residue Drying Magma Recirculation Pump	78.9	87	90	100	92	73	1.0	73
34G-157	Brine Conc.Evap.& Residue Drying Centrifuge Feed Pump	4.6	46	10	15	87	8.6	1.0	9
34G-158	Brine Conc.Evap.& Residur Drying Mother Liquor Pump	4.6	46	10	15	87	8.6	1.0	9
34G-159	Brine Conc.Evap.& Residue Drying Condensate Pump	.66	55	1.2	2	79	1.14	1.0	1
34G-160	Brine Conc.Evap.& Residue Drying Vacuum Pump	-	40	4.7	7½	85	4.13	1.0	4
34G-161 A	Deoiled W.T. Syst. - Polymer Transfer Pump	.375	75	1/2	3/4	71	.53	0.5	3
34G-161 B	" "	.375	75	1/2	3/4	71	.53	0.0	0
Pumpsin 34Z-121 A,B,C	Zimpro Main Feed Pump	32.06	75	42.76	50	91	35.1	1.0	35
"	" "	"	"	"	"	"	"	0.0	0
"	Zimpro High Pressure Pump	930	75	1240	1500	94	984	1.0	984
"	" "	"	"	"	"	"	"	0.0	0

TABLE 6 (Continued)

ELECTRICAL SUMMARY - PLANT 34 (cont.)

CONSUMED

PUMPS

ITEM NO.	SERVICE	OPERATING HHP	EFF.%	OPERATING BHP	CONNECTED HP	MOTOR EFF.%	OPERATING KW	ON-STREAM FACTOR	AVERAGE OP. KW
Pumpsin 34Z-121 A,B,C	Zimpro H.P. Purge Pump	.88	75	1.17	1½	80	1.1	1.0	1
"	" "	"	"	"	"	"	"	0.0	0
				TOTAL PUMPS					3,207

COMPRESSORS AND BLOWERS

34K-101	CSP run-off treatment - Backwash Air Blower	-	-	15	20	88	13	0.05	1
34K-102 A	Sanitary Sewage Treatment Air Blower	-	-	15	20	88	13	1.0	13
34K-102 B	" "	-	-	15	20	88	13	0.0	0
34K-103 A	Oily W.T.Syst. - Air Conditioning	-	-	2.5	3	83	2.25	1.0	2
34K-103 B	" "	-	-	2.5	3	83	2.25	0.0	0
34K-104 A	Deoiled W.T. Syst. Marox Diffuser	-	-	20	30	87	18	1.0	18
34K-104 B	" "	-	-	20	30	87	18	1.0	18
34K-104 C	" "	"	"	"	"	"	"	"	"
34K-104 D	" "	"	"	"	"	"	"	"	"
34K-104 E	" "	"	"	"	"	"	"	"	"
34K-104 F	" "	"	"	"	"	"	"	"	"
34K-105 A	Deoiled W.T. Syst. - Filter Back-wash Air Blowers	-	-	15	20	88	12.72	0.5	6
34K-105 B	" "	"	"	"	"	"	"	0.0	0

TABLE 6 (Continued)

ELECTRICAL SUMMARY - PLANT 34 (cont.)

COMPRESSORS AND BLOWERS

ITEM NO.	SERVICE	OPERATING IIHP	EFF.%	OPERATING BHP	CONNECTED HP	MOTOR EFF.%	OPERATING KW	ON-STREAM FACTOR	AVERAGE OP. KW
34K-106 A	Stripped/Extracted Sour W.T. Filter Backwash Blower	-	-	15	20	88	13	0.5	6
34K-106 B	" "	-	-	15	20	88	13	0.0	0
34K-108	Brine Conc.Evap.& Residue Drying Backwash Air Blower	-	-	15	20	88	13	0.5	6
34K-109 A	Brine Conc.Evap.& Residue Drying Scavenge Compressor	-	-	148	20	88	13	1.0	13
34K-109 B	" "	-	-	148	20	88	13	1.0	13
34K-110 A	Brine Conc.Evap.& Residue Drying Steam Compressor	-	-	755	1,000	94	600	1.0	600
34K-110 B	" "	-	-	755	1,000	94	600	1.0	600
34K-111	Brine Conc.Evap.& Residue Drying Draft Fan	-	-	25	30	89	21	1.0	21
34K-112 A	Brine Conc.Evap.& Residue Drying Scavenge Compressor	-	-	14.8	20	88	12.72	1.0	13
34K-112 B	" "	-	-	14.8	20	88	12.72	1.0	13
34K-113 A	Brine Conc.Evap.& Residue Drying Steam Compressor	-	-	755	1,000	94	600	1.0	600
34K-113 B	" "	-	-	755	1,000	94	600	1.0	600
34K-114 A	Stripped/Extracted Sour W.T. Oxygen Compressor	-	-	1,310	1,500	94	1,040	1.0	1,040
34K-114 B	" "	-	-	1,310	1,500	94	1,040	0.0	0
	TOTAL COMPRESSORS AND BLOWERS								3,655

TABLE 6 (Continued)

ELECTRICAL SUMMARY - PLANT 34 (cont.)

CONSUMED

SPECIAL EQUIPMENT ITEM NO.	SERVICE	OPERATING HHP	EFF.%	OPERATING BHP	CONNECTED HP	MOTOR EFF.%	OPERATING KW	ON-STREAM FACTOR	AVERAGE OP. KW
SPECIAL EQUIPMENT									
34Y-101	Oily W.T.Syst. Alum Solution Mixer	-	-	3/4	1½	60	.94	1.0	1
34Y-102	Oily W.T. Syst. Polymer Solution Mixer	-	-	3/4	1½	60	.94	1.0	1
34Y-114	Oily W.T. Syst.-Mechanical Equipment for API Separator	-	-	1/2	1	78	.48	1.0	NIL
34Y-103	Oily W.T. Syst. Flash Mixer	-	-	2	3	81	1.85	1.0	2
34Y-104	Oily W.T.Syst. Flocculator/Mixer	-	-	1	1½	79	.95	1.0	1
34Y-105	Brine Conc.Evap.& Residue Drying Polymer Mixer	-	-	1/2	1	60	.62	1.0	1
34Y-106	Brine Conc.Evap.& Residue Drying Feed Tank Agitator	-	-	15	20	80	14	1.0	14
34Y-108	Brine Conc.Evap.& Residue Drying Produce Cyclone	-	-	1	1½	79	.95	1.0	1
34Y-109	Brine Conc.Evap.& Residue Drying Fabric Filter Collector	-	-	5	7½	80	4.67	1.0	5
34Y-111	Brine Conc.Evap.& Residue Drying Solid Bowl Centrifuge	-	-	150	200	93	121	1.0	121
34D-116	Deoiled W.T.Syst. - Polymer Mixer	-	-	1/2	1	78	.48	0.5	NIL
34D-120	Stripped/Extracted Sour W.T. PAC Slurry Tank Mixer	-	-	1	1½	79	.95	1.0	1
34D-123	Stripped/Extracted Sour W.T. Polymer Mixing Tank Mixer	-	-	1/2	1	60	.62	1.0	1

TABLE 6 (Continued)

ELECTRICAL SUMMARY - PLANT 34 (cont.)

CONSUMED

SPECIAL EQUIPMENT

ITEM NO.	SERVICE	OPERATING HHP	EFF.%	OPERATING BHP	CONNECTED HP	MOTOR EFF.%	OPERATING KW	ON-STREAM FACTOR	AVERAGE OP. KW
34D-126 A	Stripped/Extracted Sour W.T. Sodium Bisulfite Soln.Tk.Mixer	-	-	1/2	1	60	.62	1.0	1
34D-126 B	" "	-	-	"	"	"	"	0.0	0
34D-128 A	Stripped/Extracted Sour W.T. Polyphosphate Mixer	-	-	"	"	"	"	1.0	1
34D-128 B	" "	-	-	"	"	"	"	0.0	0
34D-139	Brine Conc.Evap.& Residue Drying Solid Storage Bin Vibrator	-	-	1	1½	79	.95	1.0	1
34D-144 A	Brine Conc.Evap.& Residue Drying Storage Bin Vibrator	-	-	1	1½	79	.95	1.0	1
34D-144 B	" "	-	-	1	1½	79	.95	1.0	1
34Z-101	CSP run-off Syst. - Polymer Mixer	-	-	3/4	1	78	.72	0.1	NIL
34Z-102	CSP run-off Syst. - Reactor Clarifier Scraper	-	-	1	1½	78	.96	0.1	NIL
34Z-106	Sanitary Sewage Treatment Sludge Remover	-	-	1/2	1	78	.48	1.0	NIL
34Z-109	Sanitary Sewage Treatment Comminutor	-	-	1/2	1	78	.48	1.0	NIL
34Z-115 A	Oily W.T. Syst. - Flotator	-	-	1/2	1	78	.48	1.0	NIL
34Z-115 B	" "	-	-	1/2	1	78	.48	1.0	NIL
34Z-117 A	Deoiled W.T. Syst. - Clarifier	-	-	1	2	60	1.25	1.0	1
34Z-117 B	" "	-	-	1	2	60	1.25	1.0	1
34Z-117 C	" "	-	-	1	2	60	1.25	1.0	1
34Z-118	Deoiled W.T. Syst. Sludge Thickener	-	-	1	2	60	1.25	1.0	1
34Z-122 A	Stripped/Extracted Sour W.T. PAC Feeder	-	-	1/2	1	60	.62	1.0	1

TABLE 6 (Continued)

ELECTRICAL SUMMARY - PLANT 34 (cont.)

CONSUMED

SPECIAL EQUIPMENT

ITEM NO.	SERVICE	OPERATING HHP	EFF.%	OPERATING BHP	CONNECTED HP	MOTOR EFF.%	OPERATING KW	ON-STREAM FACTOR	AVERAGE OP. KW
34Z-122 B	Stripped/Extracted Sour W.T. PAC Feeder	-	-	1/2	1	60	.62	0.0	0
34Z-124 A	Stripped/Extracted Sour W.T. Clarifiers	-	-	1	2	60	1.25	1.0	1
34Z-124 B	" "	-	-	1	2	60	1.25	1.0	1
34Z-124 C	" "	-	-	1	2	60	1.25	1.0	1
34Z-133 A	Stripped/Extracted Sour W.T. Marox Diffuser	-	-	10	15	87	9	1.0	9
34Z-133 B	" "	"	"	"	"	"	"	"	"
34Z-133 C	" "	"	"	"	"	"	"	"	"
34Z-133 D	" "	"	"	"	"	"	"	"	"
34Z-133 E	" "	"	"	"	"	"	"	"	"
34Z-133 F	" "	"	"	"	"	"	"	"	"
34Z-134 A	" "	"	"	"	"	"	"	"	"
34Z-134 B	" "	"	"	"	"	"	"	"	"
34Z-134 C	" "	"	"	"	"	"	"	"	"
34Z-134 D	" "	"	"	"	"	"	"	"	"
34Z-134 E	" "	"	"	"	"	"	"	"	"
34Z-134 F	" "	"	"	"	"	"	"	"	"
34Z-135 A	" "	"	"	"	"	"	"	"	"
34Z-135 B	" "	"	"	"	"	"	"	"	"
34Z-135 C	" "	"	"	"	"	"	"	"	"
34Z-135 D	" "	"	"	"	"	"	"	"	"
34Z-135 E	" "	"	"	"	"	"	"	"	"
34Z-135 F	" "	"	"	"	"	"	"	"	"

TABLE 6 (Continued)

ELECTRICAL SUMMARY - PLANT 34 (cont.)

CONSUMED

SPECIAL EQUIPMENT

ITEM NO.	SERVICE	OPERATING HHP	EFF.%	OPERATING BHP	CONNECTED HP	MOTOR EFF.%	OPERATING KW	ON-STREAM FACTOR	AVERAGE OP. KW
34Z-136 A	Stripped/Extracted Sour W.T. Marox Diffuser	-	-	10	15	87	9	1.0	9
34Z-136 B	" "	"	"	"	"	"	"	"	"
34Z-136 C	" "	"	"	"	"	"	"	"	"
34Z-136 D	" "	"	"	"	"	"	"	"	"
34Z-136 E	" "	"	"	"	"	"	"	"	"
34Z-136 F	" "	"	"	"	"	"	"	"	"
34Z-137 A	" "	"	"	"	"	"	"	"	"
34Z-137 B	" "	"	"	"	"	"	"	"	"
34Z-137 C	" "	"	"	"	"	"	"	"	"
34Z-137 D	" "	"	"	"	"	"	"	"	"
34Z-137 E	" "	"	"	"	"	"	"	"	"
34Z-137 F	" "	"	"	"	"	"	"	"	"
				TOTAL SPECIAL EQUIPMENT					432
				TOTAL PLANT CONSUMPTION					7,294

TABLE 6 (Continued)

ELECTRICAL SUMMARY

PLANT 35

CONSUMED	OPERATING KW
Three trains @ 100% capacity (From Davy McKee)	4,284
ΔKW for extra train @ 75% capacity	
35 G - 102	14
35 G - 103	4
35 G - 104	4
35 G - 105	4
35 G - 106	4
35 G - 108	32
35 G - 112	52
35 K - 101	152
35 K - 103	4
SUBTOTAL	270
TOTAL PLANT CONSUMPTION FOR FOUR TRAINS @ 75% CAPACITY	4,554

TABLE 6 (Continued)

ELECTRICAL SUMMARY

PLANT 36

CONSUMED

ITEM NO.	SERVICE	OPERATING BHP	CONNECTED HP	MOTOR EFF.%	OPERATING KW	ON-STREAM FACTOR	AVERAGE OP. KW
36V-101 A	Instrument & Plant Air Compressor	924	1,000	94	733	1.0	733
36V-101 B	" "	924	1,000	94	733	1.0	733
36V-101 C	" "	924	1,000	94	733	0.0	0
36V-102 A	Air Dryer Package						
	Electrical Heater	-	-	-	215	0.23	50
	Reactivation Blower	40	50	90	33	0.33	10
36V-102 B	Air Dryer Package						
	Electrical H-ater	-	-	-	215	0.0	0
	Reactivation Blower	40	50	90	33	0.0	0
				TOTAL PLANT CONSUMPTION			1,526

TABLE 6 (Continued)

ELECTRICAL SUMMARY

PLANT 37

CONSUMED SERVICE	OPERATING KW	ON-STREAM FACTOR	AVERAGE OP. KW
COMMUNICATIONS	18	0.7	13
		TOTAL PLANT CONSUMPTION	13

TABLE 6 (Continued)

UTILITY SUMMARY

PLANT 38

CONSUMED COMPRESSORS ITEM NO.	SERVICE	DESIGN BHP	CONNECTED HP	MOTOR EFF.%	DESIGN KW	ON-STREAM FACTOR	AVERAGE DESIGN KW	DESIGN[1] ALLOWANCE %	POWER CREDIT[3] FOR OP. RATE %	AVERAGE OP. KW
38K-101 A	High Purity Nitrogen Compressor	3,120	3,500	94	2,476	0.5	1,238	10	5	1,176
38K-101 B	High Purity Nitrogen Compressor	3,120	3,500	94	2,476	0.0	0	-	-	-
38K-103 A	Air Slides Nitrogen Blower	198	250	92	161	1.0	161	43[2]	35	105
38K-103 B	Air Slides Nitrogen Blower	198	250	92	161	1.0	161	43[2]	35	105
	TOTAL COMPRESSORS									1,386
	TOTAL PLANT CONSUMPTION									1,386

NOTES: (1) Above operating flow rate.

(2) Based on a revised nitrogen requirement of 7,060 scfm.

(3) Assume half of design allowance.

TABLE 6 (Continued)

ELECTRICAL SUMMARY

PLANT 39

CONSUMED PUMPS ITEM NO.	SERVICE	OPERATING HHP	PUMP EFF.%	OPERATING BHP	CONNECTED HP	MOTOR EFF.%	OPERATING KW	ON-STREAM FACTOR	AVERAGE OP. KW
39G-001A	Neutral Oil to Plant 12 Feed and Booster Pump	5.88	45	13	15	87	11	1.0	11
39G-001B	" "	"	"	"	"	"	"	0.0	0
39G-002A	" "	"	"	"	15	"	"	1.0	11
39G-002B	" "	"	"	"	"	"	"	0.0	0
39G-003A	Pump Warming System Circulation	2.2	63	3.5	5	83	3	1.0	3
39G-003B		"	"	"	"	"	"	0.0	0
39G-004A		"	"	"	5	"	"	1.0	3
39G-004B		"	"	"	"	"	"	0.0	0
39G-102A	Ebullating Pump Seal Oil Supply	2.0	57	3.5	5	83	3	1.0	3
39G-102B	"	"	"	"	"	"	"	1.0	3
39G-102C	"	"	"	"	"	"	"	0.0	0
39G-202A	"	"	"	"	"	"	"	1.0	3
39G-202B	"	"	"	"	"	"	"	1.0	3
39G-202C	"	"	"	"	"	"	"	0.0	0
39G-302A	"	"	"	"	"	"	"	1.0	3
39G-302B	"	"	"	"	"	"	"	1.0	3
39G-302C	"	"	"	"	"	"	"	0.0	0
39G-402A	"	"	"	"	"	"	"	1.0	3
39G-402B	"	"	"	"	"	"	"	1.0	3
39G-402C	"	"	"	"	"	"	"	0.0	0
39G-502A	"	"	"	"	"	"	"	1.0	3
39G-502B	"	"	"	"	"	"	"	1.0	3
39G-502C	"	"	"	"	"	"	"	0.0	0

TABLE 6 (Continued)

ELECTRICAL SUMMARY - PLANT 39 (cont.)

CONSUMED

PUMPS

ITEM NO.	SERVICE	OPERATING HHP	PUMP EFF.%	OPERATING BHP	CONNECTED HP	MOTOR EFF.%	OPERATING KW	ON-STREAM FACTOR	AVERAGE OP. KW
39G-602A	Ebullating Pump Seal Oil Supply	2.0	57	3.5	5	83	3	1.0	3
39G-602B	"	"	"	"	"	"	"	1.0	3
39G-602C	"	"	"	"	"	"	"	0.0	0
39G-702A	"	"	"	"	"	"	"	1.0	3
39G-702B	"	"	"	"	"	"	"	1.0	3
39G-702C	"	"	"	"	"	"	"	0.0	0
39G-802A	"	"	"	"	"	"	"	0.0	0
39G-802B	"	"	"	"	"	"	"	0.0	0
39G-802C	"	"	"	"	"	"	"	0.0	0
39G-106A	High Pressure Flush Oil	2.2	63	3.5	5	83	3	1.0	3
39G-106B	"	"	"	"	"	"	"	1.0	3
39G-106C	"	"	"	"	"	"	"	0.0	0
39G-206A	"	"	"	"	"	"	"	1.0	3
39G-206B	"	"	"	"	"	"	"	1.0	3
39G-206C	"	"	"	"	"	"	"	0.0	0
39G-306A	"	"	"	"	"	"	"	1.0	3
39G-306B	"	"	"	"	"	"	"	1.0	3
39G-306C	"	"	"	"	"	"	"	0.0	0
39G-406A	"	"	"	"	"	"	"	1.0	3
39G-406B	"	"	"	"	"	"	"	1.0	3
39G-406C	"	"	"	"	"	"	"	0.0	0
39G-506A	"	"	"	"	"	"	"	1.0	3
39G-506B	"	"	"	"	"	"	"	1.0	3
39G-506C	"	"	"	"	"	"	"	0.0	0

TABLE 6 (Continued)

ELECTRICAL SUMMARY - PLANT 39 (cont.)

CONSUMED

PUMPS ITEM NO.	SERVICE	OPERATING HHP	PUMP EFF.%	OPERATING BHP	CONNECTED HP	MOTOR EFF.%	OPERATING KW	ON-STREAM FACTOR	AVERAGE OP. KW
39G-606A	High Pressure Flush Oil	2.2	80	3.5	5	83	3	1.0	3
" B	"	"	"	"	"	"	"	1.0	3
" C	"	"	"	"	"	"	"	0.0	0
39G-706A	High Pressure Flush Oil	2.2	63	3.5	5	83	3	1.0	3
" B	"	"	"	"	"	"	"	1.0	3
" C	"	"	"	"	"	"	"	0.0	0
39G-806A	"	"	"	"	"	"	"	0.0	0
" B	"	"	"	"	"	"	"	0.0	0
" C	"	"	"	"	"	"	"	0.0	0
39G-107A	Glycol to Plants 2,3,4,5,12,&17	33.4	49	68.7	100	91	56	1.0	56
" B	"	"	"	"	"	"	"	1.0	56
" C	"	"	"	"	"	"	"	0.0	0
39G-207A	"	"	"	"	"	"	"	1.0	56
" B	"	"	"	"	"	"	"	1.0	56
" C	"	"	"	"	"	"	"	0.0	0
39G-110A	Heavy Flush Oil to PH 12 Surry Pump	5.88	45	13	15	87	11	1.0	11
" B	"	"	"	"	"	"	"	0.0	0
39G-210A	"	"	"	"	"	"	"	1.0	11
" B	"	"	"	"	"	"	"	0.0	0
39G-310A	"	"	"	"	"	"	"	1.0	11
" B	"	"	"	"	"	"	"	0.0	0

TABLE 6 (Continued)

ELECTRICAL SUMMARY - PLANT 39 (cont.)

CONSUMED

PUMPS ITEM NO.	SERVICE	OPERATING HHP	PUMP EFF.%	OPERATING BHP	CONNECTED HP	MOTOR EFF.%	OPERATING KW	ON-STREAM FACTOR	AVERAGE OP. KW
39G-410A	Heavy Flush Oil to PH 12 Surry Pump	5.88	45	13	15	87	11	1.0	11
" B	"	"	"	"	"	"	"	0.0	0
39G-510A	"	"	"	"	"	"	"	0.0	0
" B	"	"	"	"	"	"	"	0.0	0
39G-610A	"	"	"	"	"	"	"	0.0	0
" B	"	"	"	"	"	"	"	0.0	0
39G-710A	"	"	"	"	"	"	"	0.0	0
" B	"	"	"	"	"	"	"	0.0	0
39G-810A	"	"	"	"	"	"	"	0.0	0
" B	"	"	"	"	"	"	"	0.0	0
39G-111A	Heavy Flush Oil High Pressure Pumps	1050.0	80	1312	1500	96	1020	0.01	10
" B	"	"	"	"	"	"	"	0.0	0
	Total Pumps								390

TOTAL PLANT CONSUMPTION = 390

TABLE 6 (Continued)

ELECTRICAL SUMMARY

PLANT 41

BUILDING DESCRIPTION	NOTE (2)	AREA/EA (FT^2)	TOTAL AREA (FT^2)	TYPE OF CONSUMPTION	CONSUMPTION (W/FT^2)	OPERATING KW	ON-STREAM FACTOR	AVERAGE OP. KW
1. Distributed System Control Room								
o H-Coal[R]	(1)	4,900	4,900	L + HVAC	15	74	1.0	74
o Gas Plant	(1)	4,900	4,900	L + HVAC	15	74	1.0	74
o Boiler Plant	(1)	3,500	3,500	L + HVAC	15	53	1.0	53
2. Operating Equipment Room								
o Tank Farm	(1)	520	520	L + HVAC	15	8	0.67	5
o Process Plants	(11)	520	5,720	L + HVAC	15	86	1.0	86
o Wet Air Oxidation/Lab	(1)	1,600	1,600	L + HVAC	10	16	1.0	16
o Reverse Osmosis/Lab	(1)	5,000	5,000	L + HVAC	10	50	1.0	50
3. Plant Laboratory	(1)	20,000	20,000	L + HVAC	10	200	1.0	200
4. Change House	(1)	20,000	20,000	L + HVAC	10	200	1.0	200
5. Cafeteria	(1)	20,000	20,000	L + HVAC	10	200	0.67	134
	(1)	5,000	5,000	L + HVAC	10	50	0.67	34
6. Medical	(1)	5,000	5,000	L + HVAC	10	50	1.0	50
7. Ash Handling	(1)	12,000	12,000	L+H + Part. AC	5	60	1.0	60
8. Operator Shelters								
o Coal Pile	(2)	200	400	L+H + Part. AC	5	2	1.0	2
o Coal Unloading Dock	(1)	200	200	L+H + Part. AC	5	1	0.67	1
o Barge Loading Dock	(1)	200	200	L+H + Part. AC	5	1	0.67	1
o Solid Waste Disposal	(1)	200	200	L+H + Part. AC	5	1	1.0	1
o Cooling Water Tower	(1)	200	200	L+H + Part. AC	5	1	1.0	1
o Water Pond	(1)	200	200	L+H + Part. AC	5	1	1.0	1

TABLE 6 (Continued)

ELECTRICAL SUMMARY (cont.)

BUILDING DESCRIPTION	NOTE (2)	AREA/EA (FT^2)	TOTAL AREA (FT^2)	TYPE OF CONSUMPTION	CONSUMPTION (W/FT^2)	OPERATING KW	ON-STREAM FACTOR	AVERAGE OP. KW
o Tank Car Loading	(1)	200	200	L+H + Part. AC	5	1	0.67	1
o Tank Truck Loading	(1)	200	200	L+H + Part. AC	5	1	0.67	1
9. Gate House	(4)	400	1,600	L+H + Part. AC	5	8	1.0	8
10. Guard/Security	(1)	5,000	5,000	"	5	25	1.0	25
11. Switchgear Building								
o 161 KV	(2)	3,000	6,000	"	5	30	1.0	30
o 34.5 KV	(2)	3,000	6,000	"	5	30	1.0	30
o 13.8 KV	(2)	3,000	6,000	"	5	30	1.0	30
o Process Plants	(18)	900	16,200	"	5	81	1.0	81
12. Fire Station	(1)	4,800	4,800	"	5	24	1.0	24
13. Warehouse	(1)	80,000	80,000	"	5	400	0.67	268
14. Maintenance								
o B-1	(1)	20,000	20,000	"	5	100	0.67	67
o B-2	(1)	4,000	4,000	"	5	20	0.67	13
o B-3	(1)	6,000	6,000	"	5	30	0.67	20
o B-4	(1)	6,000	6,000	"	5	30	0.67	20
o B-5	(1)	4,000	6,000	"	5	30	0.67	20
o B-6	(1)	4,000	4,000	"	5	20	0.67	13
15. Garage								
o Mobile Equipment	(1)	4,000	4,000	"	5	20	0.67	13
o General		10,000	10,000	"	5	50	0.67	34

TABLE 6 (Continued)

ELECTRICAL SUMMARY (cont.)

BUILDING DESCRIPTION	NOTE (2)	AREA/EA (FT^2)	TOTAL AREA (FT^2)	TYPE OF CONSUMPTION	CONSUMPTION (W/FT^2)	OPERATING KW	ON-STREAM FACTOR	AVERAGE OP. KW
16. Coal Car Unloading	(1)	2,100	2,100	L+H + Part. AC	5	11	0.67	7
17. Compressor Shelter								
o Plant 6	(1)	3,000	3,000	L	2	6	0.50	3
o Plant 7	(2)	5,400	10,800	L	2	22	0.5	11
o Plant 8	(1)	1,250	1,250	"	2	3	0.5	2
o Plant 12	(1)	14,000	14,000	"	2	28	0.5	14
"	(1)	3,900	3,900	"	2	8	0.5	4
o Plant 15	(3)	4,399	13,197	"	2	27	0.5	14
o Plant 17	(1)	900	900	"	2	2	0.5	1
o Pumps, Chemican Feed, Filters	(15)	600	9,000	"	2	18	0.5	9
18. Transformer House	(4)	1,300	5,200	"	2	11	0.5	6
19. Special Cleaning, Foam, Chemicals	(1)	1,200	1,200	L+H	3	4	0.5	2
20. Administration Building	(1)	120,000	120,000	L+HVAC	10	1,200	0.67	800
			TOTAL CONSUMED ELECTRICAL POWER					2,614

NOTES: (1) Assumed Power Consumption

Type A: 15 W/FT^2 (L+HVAC)

B: 10 W/FT^2 (L+HVAC)

C: 5 W/FT^2 (L + PARTIAL HVAC)

D: 10 W/FT^2 (L)

ADMIN: 10 W/FT^2

(2) Number in the parentheses represents number of buildings.

TABLE 6 (Continued)

ELECTRICAL SUMMARY

PLANT 42

ELECTRICAL POWER CONSUMED

PUMPS

ITEM NO.	SERVICE	OPERATING HHP/EACH	PUMP EFF. %	OPERATING BHP/EACH	CORRECTED HP EACH	CORRECTED HP TOTAL	MOTOR EFF. %	OPERATING KW/EACH	ON-STREAM FACTOR	AVERAGE OP. KW EACH	AVERAGE OP. KW TOTAL
42H-101A, B	Vacuum Pump	-	-	1.7	2	4	80	2	1.0	2	4
42H-101C	"	-	-	1.7	2	2	80	2	0.0	0	0
42G-101A thru L	Sludge Feed Pump	-	-	1.7	2	24	80	2	1.0	2	24
42G-101M thru X	" "	-	-	1.7	2	24	80	2	0.0	0	0
42G-102A	Sludge Transfer Pump	-	-	1.7	2	2	80	2	0.5	1	1
42G-102B	" "	-	-	1.7	2	2	80	2	0.0	0	0
42G-103A, B	Filtrate Pump	-	-	8.5	10	20	85	8	1.0	8	16
42G-103C	" "	-	-	8.5	10	10	85	8	0.0	0	0
42G-104A	Filter Backwash Pump	8.75	65	13.5	15	15	85	12	0.5	6	6
42G-104B	" "	8.75	65	13.5	15	15	85	12	0.0	0	0
42G-105A	Sour Water Pump	16.0	45	35.6	50	50	90	30	1.0	30	30
42G-105B	" "	16.0	45	35.6	50	50	90	30	0.0	0	0
42G-107A	Incinerator Feed Pre-treatment Discharge Pump	0.87	25	3.5	5	5	82	3	0.5	2	2
42G-107B	" "	0.87	25	3.5	5	5	82	3	0.0	0	0
42G-108A	Incinerator Feed Transfer Pump	0.87	25	3.5	5	5	82	3	1.0	3	3
42G-108B	" "	0.87	25	3.5	5	5	82	3	0.0	0	0
42G-108C	" "	0.87	25	3.5	5	5	82	3	1.0	3	3
42G-108D	" "	0.87	25	3.5	5	5	82	3	0.0	0	0
	TOTAL PUMPS										89

TABLE 6 (Continued)

ELECTRICAL SUMMARY (cont.)

CONSUMED

BLOWERS ITEM NO.	SERVICE	OPERATING HHP/EACH	PUMP EFF. %	OPERATING BHP/EACH	CORRECTED HP EACH	CORRECTED HP TOTAL	MOTOR EFF. %	OPERATING KW/EACH	ON-STREAM FACTOR	AVERAGE OP. KW EACH	AVERAGE OP. KW TOTAL
42K-101A thru C	Overbed Air Preheat Blower	-	-	4.0	5	15	85	4	1.0	4	12
42K-101D	" "	-	-	4.0	5	5	85	4	0.0	0	0
42K-101A, B	Forced Draft Fan	-	-	40.0	50	100	90	33	1.0	33	66
42K-102C	" "	-	-	40.0	50	50	90	33	0.2	16	16
42K-102D	" "	-	-	40.0	50	50	90	33	0.0	0	0
		TOTAL BLOWERS									94
SPECIAL EQUIPMENT											
42T-101A, B	Bucket Elevator	-	-	2.4	3	6	80	2.2	0.1	NIL	NIL
42T-101C, D	" "	-	-	2.4	3	6	80	2.2	0.0	0	0
42T-102	Filter Cake Collecting Conveyor	- -	- -	8.5	10	10	85	7	1.0	7	7
42T-103	Filter Cake Transfer Conveyor	- -	- -	8.5	10	10	85	7	1.0	7	7
42T-104	Coarse Slag Conveyor	- -	- -	10	15	15	86	9	1.0	9	9
42Y-103A thru F	Feed Tank Mixer			4	5	30	85	4	1.0	4	24
		TOTAL SPECIAL EQUIPMENT									47
		TOTAL CONSUMED									230

TABLE 6 (Continued)

ELECTRICAL SUMMARY

PLANT 44

CONSUMED

SERVICE	DESIGN HHP	PUMP EFF.%	DESIGN BHP	CONNECTED HP	MOTOR EFF.%	DESIGN KW	ON-STREAM FACTOR	AVERAGE DESIGN KW	% DESIGN(1) ALLOWANCE	%OP. PWR(2) CREDIT	AVERAGE OP. KW
Leachate & Run-off	17.5	50	35.0	50	90	29.0	1.0	29.0	50	25	22
Upstream Well Pump	-	-	1.7	2	80	2	1.0	2	-	-	2
"	-	-	"	"	"	2	1.0	2	-	-	2
Downstream Well Pump	-	-	1.7	2	80	2	1.0	2	-	-	2
Leachate & Run-off	8.8	45	19.6	25	88	17	1.0	17	50	25	13
Upstream Well Pump	-	-	1.7	2	80	2	1.0	2	-	-	2
"	-	-	"	"	"	2	1.0	2	-	-	2
Downstream Well Pump	-	-	1.7	"	"	2	1.0	2	-	-	2
TOTAL PLANT CONSUMPTION =											47

NOTES: (1) Above normal rate.

(2) Assume 50% of the design allowance.

TABLE 6 (Continued)

OVERALL PLANT LIGHTING

PLANT NOS.(1)	LIGHTING AREA, SQ. FT.	FC(2)	FACTOR	W	KW
1	450,000	10	.01	45,000	45
2	67,500	10	.08	54,000	54
3,4,5, 6, 17	1,092,500	50	.01	546,250	546
7	162,500	70	.01	113,750	114
8	15,000	30	.01	4,500	5
9	90,000	10	.08	72,000	72
10	37,500	50	.01	18,750	19
12	262,500	10	.01	26,250	26
15	-	-	-	-	-
18	-	-	-	-	-
20	3,850,000	1	.08	308,000	308
21	-	-	-	-	-
22	Dock Area				
23	-	-	-	-	-
26	-	-	-	-	-
27(3)	337,500	(3 W/SQ. FT.)		1,012,500	1,013
31	426,000	30	.01	127,800	128
32	-	-	-	-	-
33	-	-	-	-	-
34	-	-	-	-	-
35	90,000	10	.01	9,000	9
36	3,750	20	.01	750	1
39	-	-	-	-	-
			SUBTOTAL		2,340

TABLE 6 (Continued)

OVERALL PLANT LIGHTING (cont.)

AREA (1)	LIGHTING AREA, SQ. FT.	FC(2)	FACTOR	W	KW
A	-	-	-	-	-
B	-	-	-	-	-
C	67,500	5	.08	27,000	27
D	Roadway				
E	10,000	20	.01	2,000	2
F	-	-	-	-	-
G	-	-	-	-	-
H	-	-	-	-	-
J	-	-	-	-	-
K	-	-	-	-	-
L	180,000	2	.167	60,120	60
M	-	-	-	-	-
N	-	-	-	-	-
P	-	-	-	-	-
Q	-	-	-	-	-
R	-	-	-	-	-
S	25,000	30	.16	120,000	120
T	-	-	-	-	-
U	200,000	.3	.08	4,800	5
V	-	-	-	-	-
W	-	-	-	-	-
X	7,500	5	.08	3,000	3
Z	-	-	-	-	-
					217

TABLE 6 (Continued)

OVERALL PLANT LIGHTING (cont.)

AREA (1)	LIGHTING AREA SQ. FT.	FC(2)	FACTOR	W	KW
AA	93,750	5	.08	37,500	38
BB	56,250	2	.08	9,000	9
CC	34,375	1	.08	2,750	3
DD	-	-	-	-	-
EE	-	-	-	-	-
FF	3,750	.1	.08	30	1
GG	-	-	-	-	-
HH	-	-	-	-	-
JJ	3,750	10	.08	3,000	3
KK	118,750	1	.08	9,500	10
LL	-	-	-	-	-
MM	150,000	.5	.08	6,000	6
NN	150,000	.3	.08	3,600	4
PP	95,000	.3	.08	2,280	2
QQ	-	-	-	-	-
RR	-	-	-	-	-
SS	-	-	-	-	-
TT	-	-	-	-	-
UU	-	-	-	-	-
Conveyor	76,500	10	.01	7,650	8
Roadway	70,550	(2 W/SQ. FT.)		141,000	141
Pipe Rack	53,700	20	.1	107,400	107
Dock	65,000	30	.1	195,000	195
					527

TABLE 6 (Continued)

OVERALL PLANT LIGHTING (cont.)

TOTAL KW BASED ON 24-HRS/DAY	3,084
ON-STREAM FACTOR	0.67
AVERAGE KW CONSUMPTION	2,066

NOTES: (1) Obtained from Plot Plan
(2) Foot Candles
(3) 5 levels indoors

4.0 CATALYST AND CHEMICALS COST

4.1 ANNUAL COST

A number of sources provided input to the annual catalyst, packing and chemical costs shown in Table 7. In the case of special or proprietary licensor catalysts, packing or chemicals, the licensor has provided an estimated yearly cost. Many of the other items are widely used in present day refineries. Consumption of all items of a nonproprietary nature was either calculated or estimated using design or operating experience. Pricing for these materials was estimated based on vendor price lists, responses to pricing inquiries, or pricing presently being experienced by Ashland Oil, Inc, whichever was most appropriate. Whether it was vendors' estimations or recent pricing, the best available information was used to estimate the annual catalyst, packing and chemical costs.

TABLE 7

ANNUAL CATALYST AND CHEMICALS COST

(100% Capacity)

Plant Number(s)	Catalyst or Chemical	Annual Cost 1981 Dollars
3	HDS-1422A Co Mo Extrudates, 1/16	19,887,100
12	Haldor-Topsoe SSK Catalyst	2,450,000
18	Hydrotreating Catalyst	429,300
18	Platforming Catalyst	279,000
7	ALCOA F_1 Alumina, 1/8"	17,300
7 and 8	Linde Molecular Sieve, 4A	435,000
31	Sodium Zeolite Resin	9,500
31	Demineralizer Anion Beds	14,100
31	Demineralizer Cation Beds	11,400
32	Gravel and Charcoal	63,500
7	DEA Solution	67,800
7	UOP	8,900
7	Caustic Soda	2,700
9,20,31 & 34	Caustic Solution	4,936,500
9	Dephenolization Solvent	235,200
10	Sulfur	Start-up Only
27	Magnetite	523,000
32	Dolomite	230,800
12	Selexol Solvent	1,759,000
17	Liquid Corrosion Inhibitor	53,500
17	Liquid Filming Amine	12,800
31	Salt (NaCl)	12,400
	Subtotal	31,438,800

TABLE 7 (cont'd)

Plant Number/s	Catalyst or Chemical	Annual Cost 1981 Dollars
20,31,32 & 34	Sulfuric Acid	86,400
32,34 & 35	Soda Ash	722,900
32 & 34	Sodium Aluminate	703,900
32	Zinc Chromate	53,500
32	Dispersing Solution	143,700
34	Polymer Solution	633,200
32 & 34	Chlorine	62,600
34	Sodium Bisulfite	159,200
34	Sodium Hexametaphosphate	376,700
	Subtotal	2,942,100
Total Annual Catalyst and Chemicals		34,380,000

4.2 INITIAL INVENTORY AND CONSUMPTION RATES

The Breckinridge Project will apply a variety of process technologies to convert 24,000 tons per day of run-of-mine coal to a nominal 53,000 barrels per day of hydrocarbon liquids. Predictably, this coal liquefaction facility will consume in operation substantial quantities of assorted catalysts, packings and chemicals. Table 8 presents a list of initial inventories and consumption rates for catalysts, packings and chemicals as identified in the Phase Zero work for economic evaluation purposes.

TABLE 8

CATALYSTS/PACKINGS/CHEMICALS

CATALYSTS

Catalyst Type	Equipment Item No.	Initial Inventory Equipment	Initial Inventory Total	Consumption Rate or (Estimated Life)
HDS-1422A or Equivalent Co-Mo 1/16" Extrudate	3C-103 thru 3C-803	672,000 lbs	1,167,000 lbs*	16,500 lbs/day
Merox Catalyst	7C-160 A and B	By UOP	By UOP	
Activated Alumina Kaiser S-201 3 x 8 mesh	10C-101 thru 10C-301 10C-102 thru 10C-302 10C-103 thru 10C-303			
	9 reactors	504,150 lbs	504,150 lbs	(3 years)
Haldor Topsoe-SSK	12C-111 thru 12C-311 12C-112 thru 12C-312 12C-113 thru 12C-313			
	9 reactors	18,375 CF	18,375 CF	(3 years)
Hydrotreating Catalyst	By UOP	$1,451,000**		$1,325/day**
Platforming Catalyst	By UOP	$7,483,000**		$ 861/day**

Notes: *Including extra storage for 30-day consumption
**From UOP proposal package for Plant 18

TABLE 8 (cont'd)

CATALYSTS/PACKINGS/CHEMICALS

PACKINGS

Packing Type	Equipment Item No.	Total Initial Inventory	Consumption Rate or (Estimated Life)
Alcoa F_1 Alumina or Equivalent 1/8" size	7C-164 A, B and C 7C-165 A, B and C 9 vessels	64,400 lbs 99,600 lbs 162,000 lbs	(3 years)
Linde Molecular Sieve Type 4A or Equivalent, 4-8 mesh	7C-151 A, B and C 8Y-18 A, B and C 6 vessels	172,200 lbs 150,000 lbs 322,200 lbs	(1 year)
1-1/2" C. S. Pall Ring	7C-157	2,280 lbs	(3 years)
2" S. S. Pall Ring	12C-124 thru 12C-324	21,600 CF	(3 years)
2" C. S. Pall Ring	12C-123 A and B thru 12C-323 A and B	39,000 CF	(3 years)
2" C. S. Pall Ring	12C-121 thru 12C-321	8,600 CF	(3 years)
Sand, 8-16 mesh	7C-162	17,400 lbs	(1 year)
Norton Denston 57 3/8" D x 1/2" H	10C-101 thru 10C-201 10C-102 thru 10C-202 10C-103 thru 10C-203 6 vessels	435,504 lbs	(3 years)
Sodium Zeolite Resins	31Z-103 A, B and C	640 CF	(3 years)
Demineralizer Anion Beds	31Z-105 A, B, C and D	935 CF	(3 years)
Gravels and Charcoals	32Z-102 A, B, C, D and E	12,700 CF	(3 years)

CHEMICALS

Basis for Inventory

1. Towers - 3" liquid height on all tower trays plus liquid hold-up at bottom
2. Drums - 50% full
3. Exchangers and pipings - 20% of total inventory in DEA or Selexol system
4. DEA surge tank and Selexol tank - will provide space to hold the vessel inventory in case one train is shut down
5. Inventory is based on actual chemical concentration unless otherwise specified

TABLE 8 (Cont'd)
CATALYSTS/PACKINGS/CHEMICALS

CHEMICALS (cont.)

Basis for Consumption Rate:

Rate is in terms of actual chemical concentration unless otherwise specified.

Chemical Names	Equipment Items	Total Initial Inventory	Consumption Rate or Estimated Life
25 wt % DEA solution (as 100%)	7C-111	6,800 lbs	
	7C-113	12,100 lbs	
	7C-114	10,500 lbs	
	7C-116	1,500 lbs	
	Exchangers and Pipings	6,200 lbs	
	7D-101	32,900 lbs	
	Entire DEA Unit	70,000 lbs	370 lbs/day
Merox Chemicals	7C-157/7C-160 A, B	By UOP	By UOP
	7C-159		
	7C-113		
	7D-114		
Allied Chemical "Selexol"	12C114/214/314	26,400 gals	
	12C-116/216/316	48,000 gals	
	12C-117/217/317	30,600 gals	
	12C-118/218/318	26,400 gals	
	12C-120/220/320	40,800 gals	
	12C-121/221/321	85,100 gals	
	12C-123 A, B/223 A, B/323 A, B	70,000 gals	
	12C-124/224/324	4,300 gals	
	12C-132 A, B/232 A, B/332 A, B	42,700 gals	
	12C-027	5,500 gals	
	Exchangers and Pipings	76,000 gals	
	12D-001	44,200 gals	
	Entire Selexo Unit	500,000 gals	500 gals/days
50 wt % Caustic Solution (as 100%)	20D-122	270,000 lbs	
	Extra Storage	540,000 lbs	

TABLE 8 (Cont'd)
CATALYSTS/PACKINGS/CHEMICALS

CHEMICALS (cont.)

Chemical Names	Equipment Items	Total Initial Inventory	Consumption Rate or (Estimated Life)
20 wt % Caustic Solution diluted from 50 wt % solution (as 100%)	20D-124	44,000 lbs	
	Extra Storage	88,000 lbs	
	Boiler preconditioning	5,000 lbs	NIL
	Sour water neutralization		90,800 lbs/day
	9D-102	40,000 lbs	20,000 lbs
	31D-108 A, B	32,000 lbs	4,920 lbs
	34D-109	1,400 lbs	1,400 lbs
		1,020,400 lbs	117,200 lbs/day
98 wt % Sulfuric Acid (as 100%)	20D-128	686,310 lbs	
	20D-129	350,000 lbs	
Dilution to 20 wt % at site if required	31D-109	11,000 lbs	4,110 lbs
	32D-113/123	960 lbs	320 lbs
	32D-137	190 lbs	170 lbs
	34D-110	1,330 lbs	1,370 lbs
	34D-129	110 lbs	680 lbs
	34D-133	100 lbs	460 lbs
75 wt % Phosphoric Acid Solution (as 100%)	9D-101	43,800 lbs	
	9C-102	25,000 lbs	
	2 vessels	68,800 lbs	37,600 lbs/month
Dephenolization Solvent Used in Plant 9	T-1 (Chem-Pro Item No.)	800 gals	
	T-2 "	4,000 gals	
	C-1 "	3,900 gals	
	3 vessels	8,700 gals	2,160 lbs/day
Sulfur	10D-101 thru 10D-104	1,100 lbs	For startup only
Liquid Corrosion Inhibitor	17V-101 and 17V-201	500 gals	96 gals/day

TABLE 8 (Cont'd)
CATALYSTS/PACKINGS/CHEMICALS

CHEMICALS (cont.)

Chemical Names	Equipment Items	Total Initial Inventory	Consumption Rate or (Estimated Life)
Liquid Filming-Type Amine	17Y-101 and 17Y-201	500 gals	24 gals/day
Magnetite	Plant 27 Equipment	120 tons	1.25 lb/ton Coal Feed
Salt (NaCl)	31Z-103 A, B and C	70,000 lbs (in bags)	2,150 lbs/day
Powdered Activated Carbon	34D-119 A, B/34D-120	1,000 lbs/day	
Dolomitic Lime	32D-130 A, B/32D-131 A, B	150,000 lbs	6,480 lbs/day
	32D-126	240,000 lbs	15,550 lbs/day
	Total	390,000 lbs	22,030 lbs/day
Soda Ash (as 98%)	Boiler Preconditioning	5,000 lbs	NIL
	32D-134	500 lbs	12,700 lbs/day
	32D-127	10,000 lbs	4,470 lbs/day
	34D-102	140 lbs	4,470 lbs/day
	35D-112	190,000 lbs	18,720 lbs/day
	Total Equipment	295,640 lbs	35,910 lbs/day
	Extra Storage	250,000 lbs	
	Total Storage	545,640 lbs	
8.25 wt % Sodium Aluminate (as 100%)	32D-135 A, B	7,000 lbs	1,320 lbs/day
	32D-128	1,170 lbs	820 lbs/day
	34D-105	500 lbs	2,600 lbs/day
	4 Vessels	8,670 lbs	4,740 lbs/day
	Warehouse	141,330 lbs	
	Total Storage	150,000 lbs	
20 wt % Zinc Chromate Solution as Corrosion Inhibitor for Cooling Water (as 100%)	32D-112	960 lbs	
	32D-122	960 lbs	
	2 vessels	1,920 lbs	360 lbs day
	Warehouse	10,080 lbs	
	Total Storage	12,000 lbs	

TABLE 8 (Cont'd)
CATALYSTS/PACKINGS/CHEMICALS

CHEMICALS (cont.)

Chemical Names	Equipment Items	Total Initial Inventory	Consumption Rate or (Estimated Life)
20 wt % Dispersing Agent Solution for Cooling Water (as 100%)	32D-111	480 lbs	
	32D-121	770 lbs	
	2 Vessels	1,250 lbs	360 lbs/day
	Warehouse	10,750 lbs	
	Total Storage	12,000 lbs	
1 wt % Polymer Solution (as 100%)	32D-132	116 lbs	610 lbs/day
	32D-129	29 lbs	85 lbs/day
	34D-107	58 lbs	180 lbs/day
	34D-115/116/117	42 lbs	70 lbs/day
	34D-122/123/124	25 lbs	70 lbs/day
	34D-131	21 lbs	33 lbs/day
	34D-101	33 lbs	30 lbs/day
	7 vessels	324 lbs	10,078 lbs/day
	Warehouse	32,676 lbs	
	Total Storage	33,000 lbs	
Chlorine from Commercial Containers	32Z-111 A, B	65,700 lbs	2,192 lbs/day
	34Z-119	7,000 lbs	234 lbs/day
	34Z-125	4,000 lbs	132 lbs/day
	34Z-129	3,000 lbs	98 lbs/day
	34Z-112	300 lbs	9 lbs/day
	6 vessels	80,000 lbs	2,665 lbs/day
30 wt % Sodium Bisulfite Solution (as 100%)	34D-125	2,280 lbs	2,580 lbs/day
	34D-134	100 lbs	150 lbs/day
	2 vessels	2,380 lbs	
	Warehouse	81,620 lbs	
	Total Storage	84,000 lbs	
25 wt % SHMP (Sodium Hexametaphosphate	34D-127/128	1,750 lbs	1,980 lbs/day
	34D-135	125 lbs	345 lbs/day
	2 vessels	1,875 lbs	2,325 lbs/day
	Warehouse	68,125 lbs	
	Total Storage	70,000 lbs	

TABLE 8 (Cont'd)
CATALYSTS/PACKINGS/CHEMICALS

CHEMICALS (cont.)

Chemical Names	Equipment Items	Total Initial Inventory	Consumption Rate or (Estimated Life)
High purity (99.99%) nitrogen, 90 psig at user B.L.	General plant purging	1,200 scfm	
	Bag house in Plant 1	120 scfm	
	Gas Drier in Plant 7	12,000 scfm***	
	Liquid drier in Plant 7	5,200 scfm***	
	Gas drier in Plant 8	11,000 scfm***	
Low purity (97%) nitrogen 5 psig at user B.L.	Plant 1 air slides	7,060 scfm	

Note: *** Only one of the three drier systems will be on cooling cycle with nitrogen at one time.

TABLE 9

ROLLING STOCK FUEL AND TIRES ANNUAL COST

(100% Capacity)

	Annual Cost 1981 Dollars
Tires and general maintenance supplies (lubricating oil and greases)	
Annual Cost = 0.35 ($5,550,000)	$1,942,500
Diesel Fuel - Plant No. 44[1]	
2 D-8 Dozers - 15 gph ($1,00/gal) x 5,280 hr/yr =	158,400
5 op 85 ton trucks - 20 gph ($1.00/gal) x 5,280 hr/yr =	528,000
1 15 ton Compactor - 10 gph	52,800
1 Scraper - 10 gph	52,800
Tires and general maintenance (including lube oil and greases) = .35 ($700,000) =	245,000
Plant No. 26	
2 D-8 Dozers - 15 gph ($1.00) 2,200 hr/yr =	33,000
3 Scrapers - 10 gph ($1.00) 2,200 hr/yr =	33,000
TOTAL	$3,045,000

(1) Plant 44 operating costs shown here are not consistent with current planning for Plant 44.

6.0 PREOPERATING, CONSTRUCTION PROJECT TEAM, TRAINING, START-UP, AND DEBUGGING COSTS

The first two trains of H-Coal® Reactors are scheduled to start in 1988. Three years of operation at reduced capacity is anticipated before the facility reaches its maximum anticipated stream factor of 87%. Table 7, Table 8, and Table 9 provided the estimated operating cost for these first three years of operation at reduced stream factors.

It is important to have operating personnel involved with the project throughout the engineering and construction phase of the work. Table 10 is a projection of personnel needs for the preoperating, training, and start-up expenses. These projections have been made based on the best information available. The number of people have been taken from the schedules set up for organization, training, and start-up of the Breckinridge Project.

Table 11 translates the personnel needs to expenses in dollars per year from 1982 to full plant capacity in 1990. Estimated wages and salaries are based on existing wage and salary structure in Kentucky for people of comparable job performance levels.

A debugging crew from the original construction project team will be retained through 1990 to insure smooth start-up of the complex. This is reflected in the costs for the years 1988, 1989 and 1990.

TABLE 10

PRE-OPERATING, TRAINING, STARTUP, AND DEBUGGING PERSONNEL

(By Year)

	Hourly Personnel	Salaried Personnel	Startup & Debugging	Construction Project Team
1982	5	21		45
1983	38	42		68
1984	52	90		80
1985	87	122		89
1986	212	148		94
1987	612	151		94
1988	925*	160*	10	69
1989			10	25
1990			25	

*Covered in operating cost table, first year operations

TABLE 11

PRE-OPERATING AND STARTUP EXPENSES

By Year

Year	Total 1981 Dollars
1982	3,876,000
1983	7,528,000
1984	11,392,000
1985	14,948,000
1986	21,184,000
1987	33,610,000
1988	4,424,000
1989	2,224,000
1990	1,400,000
TOTAL	$100,586,000

TABLE 12

OPERATING COST
FIRST PRODUCTION YEAR, 1988
(20% Onstream)

		Annual Costs 1981 Dollars
Coal		56,088,000
Power		10,870,000
Chemicals and Catalyst		7,959,000
Rolling Stock Fuel and Tires		704,900
Operating Supplies @ 15% of Maintenance		5,087,100
	Subtotal	80,709,000
Direct Labor and Supervision		9,318,900
	Subtotal	9,318,900
Maintenance Labor and Supervision		10,513,500
Maintenance Materials		15,432,300
Contract Maintenance		7,968,500
	Subtotal	33,914,300
General Administration and Services; Laboratory; Safety, Health, Environmental, Safety, and Engineering		6,169,700
Local Taxes and Insurance @ 1.5% of Investment		47,511,500
	TOTAL ANNUAL OPERATING COST	177,623,400

TABLE 13

OPERATING COST
SECOND PRODUCTION YEAR, 1989
(50% Onstream)

	Annual Costs 1981 Dollars
Coal	140,207,800
Power	27,172,600
Chemicals and Catalyst	19,895,700
Rolling Stock Fuel and Tires	1,762,100
Operating Supplies @ 15% of Maintenance	7,241,500
Subtotal	196,279,700
Direct Labor and Supervision	13,265,300
Subtotal	13,265,300
Maintenance Labor and Supervision	14,965,900
Maintenance Materials	21,967,700
Contract Maintenance	11,343,100
Subtotal	48,276,700
General Administration Services; Laboratory; Safety Health, Environmental, Safety, and Engineering	8,782,500
Local Taxes and Insurance @ 1.5% of Investment	47,511,500
TOTAL ANNUAL OPERATING COST	314,115,700

TABLE 14

OPERATING COST
THIRD PRODUCTION YEAR, 1990
(80% Onstream)

	Annual Costs 1981 Dollars
Coal	224,351,800
Power	43,479,900
Chemicals and Catalyst	31,835,900
Rolling Stock Fuel and Tires	2,819,700
Operating Supplies @ 15% of Maintenance	7,241,500
Subtotal	309,728,800
Direct Labor and Supervision	13,265,300
Subtotal	13,265,300
Maintenance Labor and Supervision	14,965,900
Maintenance Materials	21,967,700
Contract Maintenance	11,343,100
Subtotal	48,276,700
General Administration and Services; Laboratory; Safety, Health, Environmental, Security, and Engineering	8,782,500
Local Taxes and Insurance @ 1.5% of Investment	47,511,500
TOTAL ANNUAL OPERATING COST	427,564,800

Material Balance

7.0 MATERIAL BALANCE

The overall block flow diagram for the Phase Zero design of the Breckinridge Project is presented in Drawing Number 50-D-B-1. The Breckinridge Project entails the design, construction and operation of a commercial coal liquefaction facility that will convert 23,582 tons per stream day of run-of-mine (ROM) coal into 52,887 barrels per stream day of hydrocarbon liquids.* The facility is designed to process a mix of feed coals that includes Illinois No. 6, Kentucky No. 9, and Kentucky No. 11. The ROM coal will be cleaned, dried and pulverized prior to injection into the liquefaction reactors. Reaction products are separated and upgraded in an involved set of processing plants as depicted on the overall block flow diagram.

Major products refined for marketing include pipeline gas, propane, butane, 105 RONC reformate, middle distillate and heavy distillate. Other significant by-products include sulfur, anhydrous ammonia and commercial grade phenol. Tables 15 and 16 present a summary of gas and major liquid products. In addition to the pipeline gas, a medium BTU gas and an ethane rich refinery fuel gas will be produced and used internally as fuel in process furnaces.

The H-Coal® hydroliquefaction yields presented on the overall block flow diagram are based on results from HRI's Process Demonstration Unit (PDU) at Trenton, New Jersey. PDU Run No. 5, Period 29 has been judged to be representative of the H-Coal® operation charging Illinois No. 6, and yields on the overall block flow diagram have been normalized accordingly.

---

* Both coal and hydrocarbon liquid numbers are presented on a dry basis.

The major process units that make up the Breckinridge Project are presented as blocks on the overall block flow diagram. Various support facilities, such as coal recieving and storage, waste water treatment, solids waste disposal, storage and shipping facilities, and services and their distribution systems, such as the flare system, inert gas, fuel gas, plant and instrument air systems, etc., are not shown on the diagram. Drawing Number 50-D-B-1 provides an overview of the project; more detailed process descriptions are presented in Reports IV and V.

Minor material balance inconsistencies will be found in streams between plants in Reports IV and V. It is accepted practice to use the best available estimates to establish an arbitrarily fixed design basis. This is done with full recognition that there will inevitably be small discrepancies between the product stream from one plant and the previously defined feed to the downstream receiving plant. The discrepancies are generally well within normal design safety factors used in the design of the equipment, and will have no effect on operating performance. All of the individual units are tied together by the overall block flow diagram. The material flows appearing on this diagram have been normalized to reflect the actual PDU run data.

TABLE 15
OVERALL BLOCK FLOW DIAGRAM
PRODUCT SUMMARY
GASEOUS PRODUCTS

	PIPELINE GAS MOL/HR	MEDIUM BTU GAS PLANT 8 (MOL/HR)	MEDIUM BTU GAS PLANT 12 (MOL/HR)	MEDIUM BTU GAS TOTAL (MOL/HR)	C_2RICH FUEL GAS (MOL/HR
H_2	2.48	117.56	4,421.80	4,539.36	181.55
N_2	147.48	49.35	40.50	89.85	31.93
CO	339.95	59.61	5,287.30	5,346.91	44.46
AR	-	-	13.10	13.10	-
CO_2	-	-	1,197.50	1,197.50	-
COS	-	-	2.00	2.00	-
H_2S	-	-	0.04	0.04	-
CH_4	2,640.19	20.94	33.40	54.34	667.11
C_2H_4	18.43	-	-	-	62.43
C_2H_6	310.75	-	-	-	1,271.39
C_3H_6	0.66	-	-	-	2.05
C_3H_8	28.74	-	-	-	28.16
H_2O	-	-	0.57	0.57	-
TOTAL MPH	3,488.68	247.46	10,996.21	11,243.67	2,289.08
MW	19.22	14.64	19.28	19.18	23.82
MMSCFD	31.73	2.25	100.02	102.27	20.82
LHV, BTU/SCF	890.00	284.00	267.00	268.00	20.82

BASIS: All products are normalized according to the Process Development Unit (PDU) Run 5, Period 29, H-Coal® Reactor yields.

TABLE 16
OVERALL BLOCK FLOW DIAGRAM
PRODUCT SUMMARY
LIQUID PRODUCT (DRY BASIS)

	Propane Product (Lb/Hr)	Butane Product (Lb/Hr)	LSR Gasoline (Lb/Hr)	105 Ron Clear Reformate (Lb/Hr)	Middle Distillate (Lb/Hr)	Heavy Distillate (Lb/Hr)	C_3 Plus Total
C_2H_4	1	-	-			-	
C_2H_6	1,160	-	-		-	-	-
C_3H_6	886	4	-		-	-	-
C_3H_8	44,644	1,378	-		-	-	-
C_4H_8	191	3,042	14		-	-	-
$N\text{-}C_4H_{10}$	599	26,880	712		1	-	-
$I\text{-}C_4H_{10}$	586	4,791	3		-	-	-
100	-	782	22,777		10	-	-
130	-	35	11,789		13	-	-
150	-	-	1,354		11	-	-
170	-	-	62		30	-	-
190	-	-	2		37	-	-
220	-	-	-		238	7	-
260	-	-	-		724	9	-
300	-	-	-		2,074	24	-
340	-	-	-		5,565	53	-
370	-	-	-		9,644	67	-
390	-	-	-		20,157	89	-
420	-	-	-		47,090	341	-

TABLE 16 (continued)
OVERALL BLOCK FLOW DIAGRAM
PRODUCT SUMMARY
LIQUID PRODUCT (DRY BASIS)

	Propane Product (Lb/Hr)	Butane Product (Lb/Hr)	LSR Gasoline (Lb/Hr)	105 Ron Clear Reformate (Lb/Hr)	Middle Distillate (Lb/Hr)	Heavy Distillate (Lb/Hr)	C_3 Plus Total
460	-	-	-		55,574	819	-
500	-	-	-		56,879	1,677	-
540	-	-	-		48,986	3,031	-
580	-	-	-		35,286	5,827	-
625	-	-	-		15,607	14,050	-
675	-	-	-		1,367	22,253	-
725	-	-	-		15	7,125	-
775	-	-	-		1,367	22,253	-
825	-	-	-		15	7,125	-
875	-	-	-		-	6,560	-
940	-	-	-		-	9,598	-
975+	-	-	-		-	74	-
TOTAL PPH	48,067	36,412	36,713	141,504	299,308(1)	81,395	643,399
°API	148.3	112.1	71.7	34.9	17.2	3.0	37.9
BPSD	6,524	4,303	3,742(2)	11,421	21,588(1) (2)	5,309(2)	52,887(1) (2)

NOTES: (1) After reduction for phenols, these flow rates on dry basis become: middle distillate - 290,907 lb/hr or 21,050 BPSD; total C_3 + = 52,349 BPSD.

(2) On wet basis, these flow rates in BPSD become: LSR Gasoline = 3,744; middle distillate excluding phenols - 21,070; heavy distillate = 5,312; total C_3 + = 52,374.

BASIS: All products are normalized according to the Process Development Unit (PDU) Run 5, Period 29 H-Coal® Reactor yields.

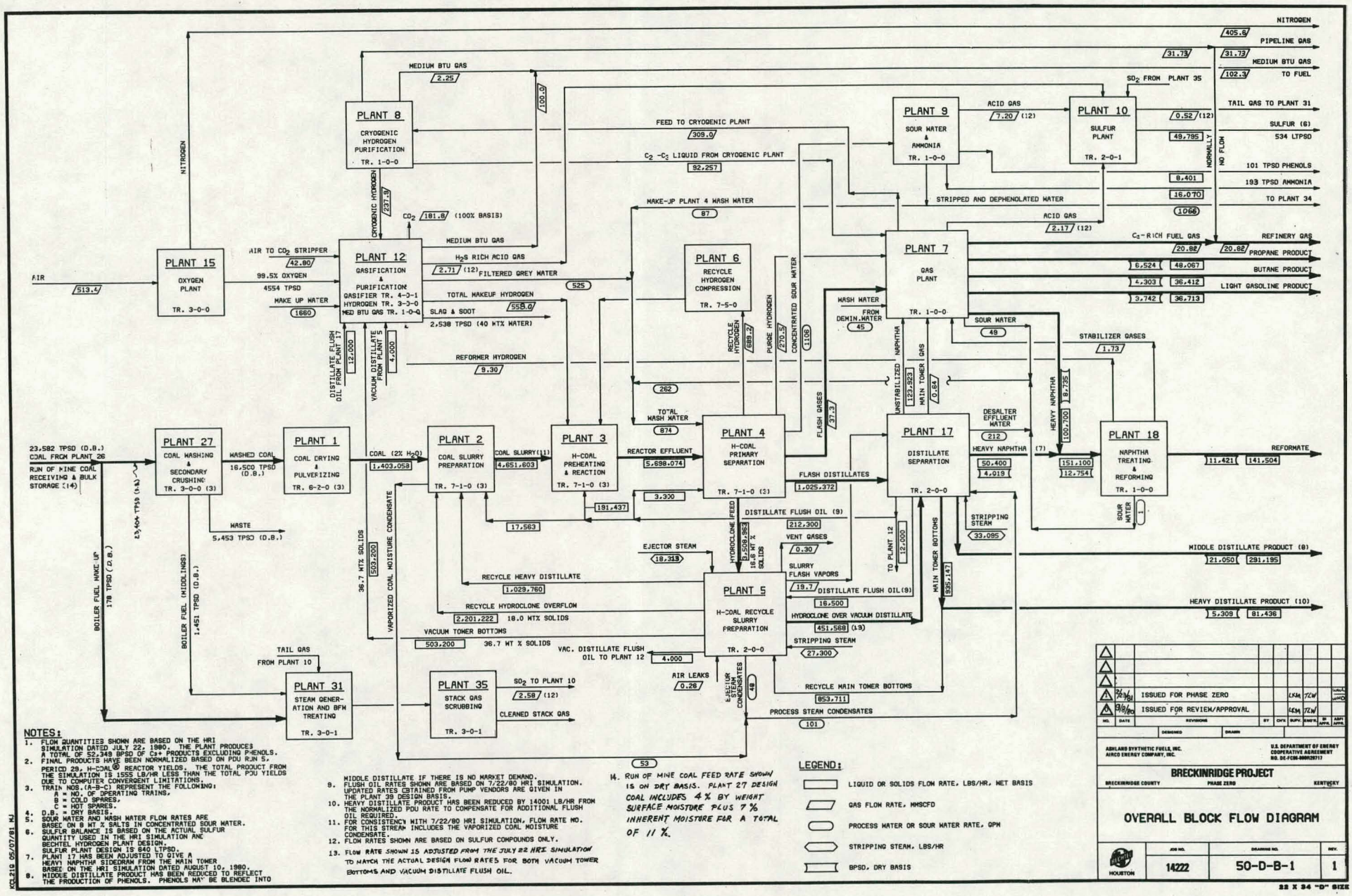

NOTES:

1. FLOW QUANTITIES SHOWN ARE BASED ON THE HRI SIMULATION DATED JULY 22, 1980. THE PLANT PRODUCES A TOTAL OF 52,349 BPSD OF C3+ PRODUCTS EXCLUDING PHENOLS.
2. FINAL PRODUCTS HAVE BEEN NORMALIZED BASED ON PDU RUN 5, PERIOD 29, H-COAL® REACTOR YIELDS. THE TOTAL PRODUCT FROM THE SIMULATION IS 1555 LB/HR LESS THAN THE TOTAL PDU YIELDS DUE TO COMPUTER CONVERGENT LIMITATIONS.
3. TRAIN NOS.(A-B-C) REPRESENT THE FOLLOWING:
   A = NO. OF OPERATING TRAINS,
   B = COLD SPARES,
   C = HOT SPARES.
4. D.B. = DRY BASIS.
5. SOUR WATER AND WASH WATER FLOW RATES ARE BASED ON 8 WT % SALTS IN CONCENTRATED SOUR WATER.
6. SULFUR BALANCE IS BASED ON THE ACTUAL SULFUR QUANTITY USED IN THE HRI SIMULATION AND BECHTEL HYDROGEN PLANT DESIGN. SULFUR PLANT DESIGN IS 840 LTPSD.
7. PLANT 17 HAS BEEN ADJUSTED TO GIVE A HEAVY NAPHTHA SIDEDRAW FROM THE MAIN TOWER BASED ON THE HRI SIMULATION DATED AUGUST 10, 1980.
8. MIDDLE DISTILLATE PRODUCT HAS BEEN REDUCED TO REFLECT THE PRODUCTION OF PHENOLS. PHENOLS MAY BE BLENDED INTO MIDDLE DISTILLATE IF THERE IS NO MARKET DEMAND.
9. FLUSH OIL RATES SHOWN ARE BASED ON 7/22/80 HRI SIMULATION. UPDATED RATES OBTAINED FROM PUMP VENDORS ARE GIVEN IN THE PLANT 39 DESIGN BASIS.
10. HEAVY DISTILLATE PRODUCT HAS BEEN REDUCED BY 14001 LB/HR FROM THE NORMALIZED PDU RATE TO COMPENSATE FOR ADDITIONAL FLUSH OIL REQUIRED.
11. FOR CONSISTENCY WITH 7/22/80 HRI SIMULATION, FLOW RATE NO. FOR THIS STREAM INCLUDES THE VAPORIZED COAL MOISTURE CONDENSATE.
12. FLOW RATES SHOWN ARE BASED ON SULFUR COMPOUNDS ONLY.
13. FLOW RATE SHOWN IS ADJUSTED FROM THE JULY 22 HRI SIMULATION TO MATCH THE ACTUAL DESIGN FLOW RATES FOR BOTH VACUUM TOWER BOTTOMS AND VACUUM DISTILLATE FLUSH OIL.
14. RUN OF MINE COAL FEED RATE SHOWN IS ON DRY BASIS. PLANT 27 DESIGN COAL INCLUDES 4 % BY WEIGHT SURFACE MOISTURE PLUS 7 % INHERENT MOISTURE FOR A TOTAL OF 11 %.

LEGEND:

- LIQUID OR SOLIDS FLOW RATE, LBS/HR, WET BASIS
- GAS FLOW RATE, MMSCFD
- PROCESS WATER OR SOUR WATER RATE, GPM
- STRIPPING STEAM, LBS/HR
- BPSD, DRY BASIS

NO.	DATE	REVISIONS	BY	CHK.	SUPV.	ENGR.	DR APPR.	ASPT APPR.
1	2/23/81	ISSUED FOR PHASE ZERO			LKM	TCW		
0	8/8/80	ISSUED FOR REVIEW/APPROVAL			LKM	TCW		

DESIGNED | DRAWN

ASHLAND SYNTHETIC FUELS, INC.
AIRCO ENERGY COMPANY, INC.

U.S. DEPARTMENT OF ENERGY
COOPERATIVE AGREEMENT
NO. DE-FC06-80PR02717

BRECKINRIDGE PROJECT

BRECKINRIDGE COUNTY | PHASE ZERO | KENTUCKY

OVERALL BLOCK FLOW DIAGRAM

HOUSTON

JOB NO.	DRAWING NO.	REV.
14222	50-D-B-1	1

22 X 34 "D" SIZE

KCL219 05/07/81 KJ

7-6

APPENDIX A

UPDATED RELIABILITY-AVAILABILITY ANALYSIS OF BRECKINRIDGE PROJECT

FOR

ASHLAND SYNTHETIC FUELS, INC.

ASHLAND, KENTUCKY

BY

ECONERGY ASSOCIATES

799 BROADWAY

NEW YORK, N.Y. 10003

MARCH, 1981

TABLE OF CONTENTS

	Page
OBJECTIVE	1
SUMMARY	2
CONCLUSIONS	3
INTRODUCTION	4
H-COAL SYSTEM	5
PLANT TRUNAROUNDS	9
RELIABILITY AND AVIALABILITY DATA	12
UNSCHEDULED DOWNTIME DATA FOR PROCESS PLANTS	15
PRODUCTION AVIALABILITY	17
REFERENCES	25

APPENDIX A

APPENDIX B

APPENDIX C

FIGURES

		Page
1.	OVERALL BLOCK DIAGRAM	6
2.	TURNAROUND SCHEDULE	11
3.	FLOW DIAGRAM PLANT 1 (2 sheets)	B-1
4.	FLOW DIAGRAM PLANT 2	B-3
5.	FLOW DIAGRAM PLANT 3 (2 sheets)-Confidential	B-4
6.	FLOW DIAGRAM PLANT 4	B-6
7.	FLOW DIAGRAM PLANT 5	B-7
8.	FLOW DIAGRAM PLANT 6	B-8
9.	FLOW DIAGRAM PLANT 7.1	B-9
10.	FLOW DIAGRAM PLANT 7.2	B-10
11.	FLOW DIAGRAM PLANT 7.3 (2 sheets)	B-11
12.	FLOW DIAGRAM PLANT 7.4 (5 sheets)	B-13
13.	FLOW DIAGRAM PLANT 8 (3 sheets)	B-18
14.	FLOW DIAGRAM PLANT 10 - Confidential	B-21
15.	FLOW DIAGRAM PLANT 12.1 - Confidential	B-22
16.	FLOW DIAGRAM PLANT 12.2 (3 sheets)	B-23
17.	FLOW DIAGRAM PLANT 12.3 (2 sheets)	B-26
18.	FLOW DIAGRAM PLANT 15 (3 sheets)	B-28
19.	FLOW DIAGRAM PLANT 19 (2 sheets)	B-31
20.	FLOW DIAGRAM PLANT 26	B-33
21	FLOW DIAGRAM PLANT 38	B-34

TABLES

		Page
1.	TURNAROUND SCHEDULE	9
2.	TURNAROUND PATTERNS	10
3.	LISTING OF RELIABILITY AND AVAILABILITY DATA	12
4.	DERIVED UNSCHEDULED DOWN-TIMES FOR PROCESS PLANTS	15
5.	ESTIMATED ANNUAL PRODUCTION FOR THE H-COAL PLANT	18
6.	PLANT GROUPING FOR THE H-COAL PLANT	19
7.	OPERATING PROBABILITIES FOR EACH TRAIN IN THE PROCESS OPERATING GROUPS	20
8.	CALCULATION OF MEAN EXPECTED PRODUCTION FOR TURNAROUND PATTERN NO. 1	22
9.	EXPECTED PRODUCTION RATES FOR EACH TURNAROUND PATTERN	23
10.	CALCULATION OF EXPECTED PRODUCTION FOR SEVENTH YEAR	24
11.	EFFECT OF RECYCLE HYDROGEN COMPRESSOR SPARING (PLANT 6)	
A-1	RELIABILITY & AVAILABILITY DATA FOR PLANT 1	A-1
A-2	2	A-2
A-3	3	A-3
A-4	4	A-5
A-5	5	A-7
A-6	6	A-9
A-7	7.1	A-10
A-8	7.2	A-11
A-9	7.3	A-13
A-9A	7.4	A-15

TABLES (cont'd)

		Page
A-10	RELIABILITY & AVAILABILITY DATA FOR PLANT 8 ...	A-17
A-11	10 ...	A-18
A-12	12.1 .	A-20
A-13	12.2 .	A-21
A-14	12.3	A-22
A-14A	12.4	A-24
A-15	17	A-25

OBJECTIVE

The objective of this study is to estimate the availability of the commercial H-Coal plant as defined by this updated process design developed under Phase Zero of the Breckinridge Project, and turnaround schedule specified by Ashland Synthetic Fuels, Inc. This will define the basis for expected production to be used in the financial analysis to be completed during Phase Zero.

SUMMARY

Reliability-Availability data for critical equipment components in the process plants in the H-Coal complex, as defined by the latest process design were developed by a consensus of extrapolation of past experience of ASFI, and EA. These data, together with scheduled turnarounds for normal preventive maintenance, were treated by mathematical probabilistic methods to derive an assessment of individual plant availabilities and of total system availabilities.

Future changes to this system may be necessary and/or desirable as defined by operating experience in the Catlettsburg pilot plant and in other synthetic fuel plants.

As may be gleaned from the conclusions, the average onstream time over the life of the project is 87 percent after reaching full production. The onstream time varies with the turnaround schedule on a 6 year cycle as shown under Item 2 of the conclusions following.

SUMMARY

Reliability-Availability data for critical equipment components in the process plants in the H-Coal complex, as defined by the latest process design were developed by a consensus of extrapolation of past experience of ASFI, and EA. These data, together with scheduled turnarounds for normal preventive maintenance, were treated by mathematical probabilistic methods to derive an assessment of individual plant availabilities and of total system availabilities.

Future changes to this system may be necessary and/or desirable as defined by operating experience in the Catlettsburg pilot plant and in other synthetic fuel plants.

As may be gleaned from the conclusions, the average onstream time over the life of the project is 87 percent after reaching full production. The onstream time varies with the turnaround schedule on a 6 year cycle as shown under Item 2 of the conclusions following.

CONCLUSIONS

1. The estimated production of the plant is:
   - o 19.1 million Bbl per calendar year, exclusive of scheduled turnarounds.
   - o 16.8 million Bbl per calendar year, over the life of the plant, inclusive of turnarounds.
2. Based on the suggested scheduled turnarounds (by ASFI), the expected annual production by years after complete start-up and debugging of the plant which ASFI estimates to require 36 months; are

Year	Production, MM Bbl.
1	17.40
2	17.40
3	16.51
4	16.49
5	15.85
6	17.40
7	16.51

   The year-to-year variations are due to changes in the turnaround patterns. After year 7, the production sequence repeats on a six-year cycle.
3. The difference between the estimated production in this study that in the report of June 1980 is due predominantly to change in product mix (from 55,000 DPSD liquid fuels to 52,898 BPSD).

INTRODUCTION

The H-Coal process, developed and licensed by Hydrocarbon Research, Inc. (HRI), is the cornerstone of the catalytic hydrogenation of coal to synthetic liquid fuels. Ashland Synthetic Fuels, Inc. (ASFI) has proposed to bring this technology to commercial operation under a co-funded contract with DOE, and has assembled a team consisting of HRI, Bechtel, Inc., and Airco, Inc. for accomplishing this.

In anticipation of this project going forward, ASFI undertook some key decision-making studies, so that when Phase Zero engineering started much of the design was defined. One of the most critical decisions to be made related to the basic configuration of the plant as dictated by the need for realistically meeting acceptable production goals. This involved a study of the reliability and availability of the components of the commercial plant, and from this, the development of criteria such as:

- Number and size of process lines
- Use of storage where possible and where justified
- Redundancy of components
- Manifolding of process lines where possible, etc.

Results of the preliminary RA-analysis were reported in June 1980. Since then, PFD's and PID's were developed for the

critical operating areas. This report covers an update of the June 1980 analysis and is based on these PFD's and PID's. This update will be used in projecting the financial analysis of commercial H-Coal plant.

H-COAL SYSTEM

Figure 1 presents a block flow diagram of the total commercial plant to convert coal to predominantly liquid products via the H-Coal process. This plant is divided into the following:

Plants

1. Coal Drying & Pulverizing (Figure 3)
2. Coal Slurry Preparation (Figure 4)
3. H-Coal Preheating & Reaction (Figure 5 - confidential)
4. H-Coal Primary Separation (Figure 6)
5. H-Coal Recycle Slurry Preparation (Figure 7)
6. H-Coal Recycle Hydrogen Concentration & Compression (Figure 8)
7. Gas Plant
   - 7.1 Hydrogen Compression (Figure 9)
   - 7.2 DEA Section (Figure 10)
   - 7.3 Product Fractionation (Figure 11)
   - 7.4 Miscellaneous Services (Figure 12)
8. Cryogenic Hydrogen Purification (Figure 13)
9. Sour Water & Ammonia**
10. Sulfur Plant (Figure 14-confidential)
12. Gasification & Purification
    - 12.1 Gasification (Figure 15 - confidential)
    - 12.2 Shift (Figure 16)
    - 12.3 H_2 Purification (Figure 17)
    - 12.4 Fuel Gas
14. Vacuum Bottoms Flaking**

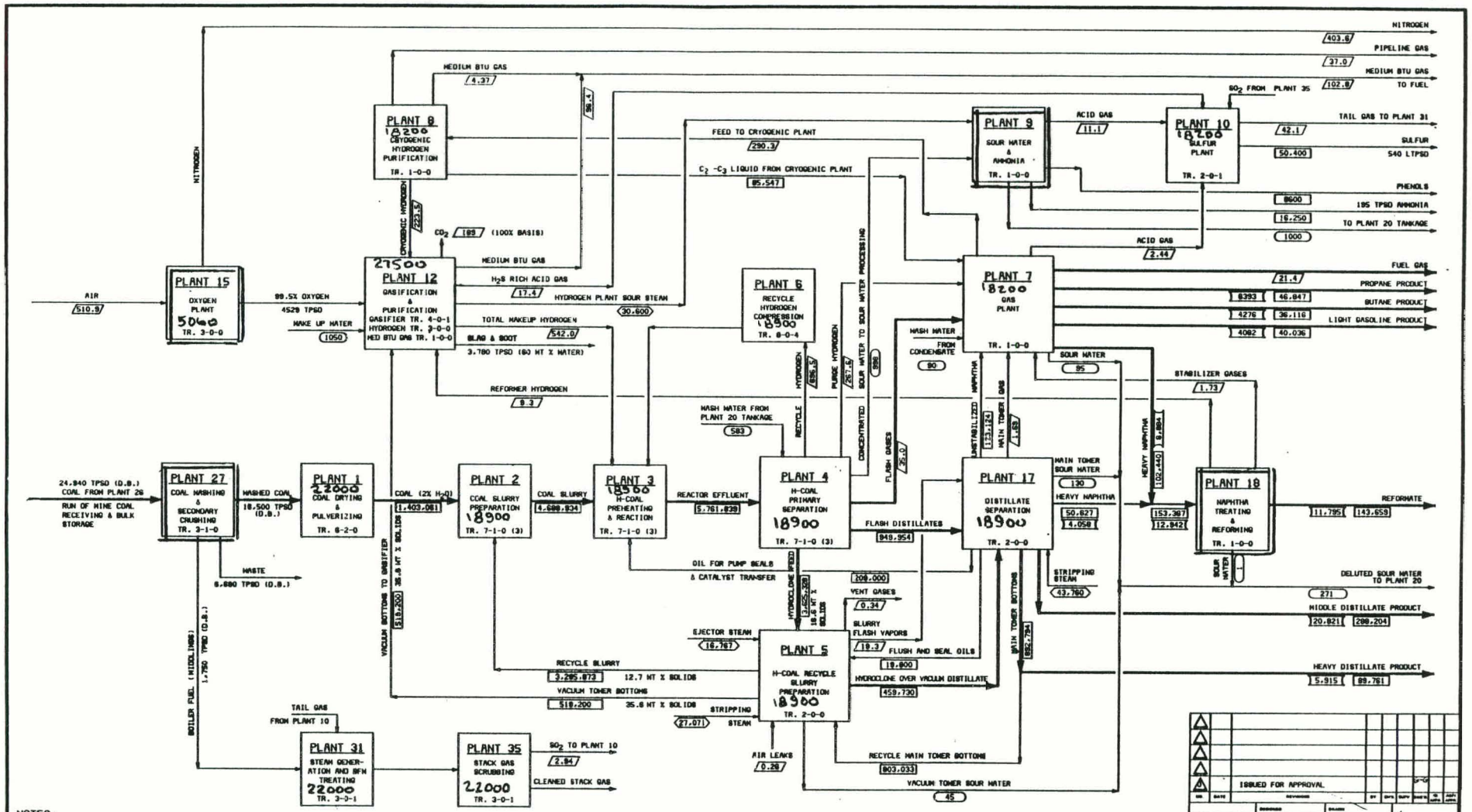

NOTES:

1. FLOW QUANTITIES SHOWN ARE BASED ON THE HRI SIMULATION DATED MAY 14, 1980. THE CAPACITY CORRESPONDS TO 53,282 BPSD OF C3+ PRODUCT.
2. HEAVY DISTILLATE PRODUCT HAS BEEN REDUCED FROM THAT SHOWN IN THE HRI SIMULATION TO MATCH A HIGHER ACTUAL DESIGN BASIS FLOW FOR VACUUM TOWER BOTTOMS.
3. DESIGNATES 7 OPERATING TRAINS
   1 COLD SPARE
   0 HOT SPARE
   SIMILAR SYSTEM USED FOR OTHER PLANTS.
4. D.B. = DRY BASIS
5. SOUR WATER AND WASH WATER FLOW RATES ARE BASED ON 10 WT % SOUR WATER CONCENTRATION.
6. SULFUR BALANCE IS BASED ON THE ACTUAL SULFUR QUANTITY USED IN THE HRI SIMULATION AND BECHTEL HYDROGEN PLANT DESIGN.
   SULFUR PLANT DESIGN IS 630 LTPSD.
7. PLANT 17 HAS BEEN ADJUSTED TO GIVE A HEAVY NAPHTHA SIDEDRAW FROM MAIN TOWER.

PLANTS 15, 9, and 18 DECOUPLED BY STORAGE. ALL OTHERS ARE NOT.
FIGURES IN EACH BOX INDICATE CAPACITY MATCHING TPD COAL TO PLANT 2, 3 etc. FOR ALL PLANTS EXCEPT PLANT 15. FIGURE FOR PLANT 15 IS TPD OXYGEN.

LEGEND:

- LIQUID OR SOLIDS FLOW RATE, LBS/HR
- GAS FLOW RATE, MMSCFD
- PROCESS WATER OR SOUR WATER RATE, GPM
- STRIPPING STEAM, LBS/HR
- BPSD

0		ISSUED FOR APPROVAL						
NO.	DATE	REVISIONS	BY	CHK'D	SUPV	APP'D	CL APPR	CUST APPR

DRAWN DESIGN

ASHLAND SYNTHETIC FUELS, INC.
ARCO ENERGY COMPANY, INC.

U.S. DEPARTMENT OF ENERGY
COOPERATIVE AGREEMENT
NO. DE FC05-80ET20317

BRECKINRIDGE PROJECT

BRECKINRIDGE COUNTY — PHASE ZERO — KENTUCKY

FIGURE 1
OVERALL BLOCK FLOW DIAGRAM

HOUSTON

JOB NO.	DRAWING NO.	REV
14222	50-D-B-01	0

8 X 34 "D" SIZE

15. Oxygen Plant** (Figure 18)

17. Distillate Separation

18. Naphtha Treating & Reforming**

19. Flare System (Figure 19)

20. Tankage**

21. Interconnecting Piping

22. River Facilities**

23. Rail, Truck, Pipeline**

26. Run-of-Mine Coal Receiving & Bulk Storage** (Figure 20)

27. Coal Washing & Secondary Crushing**

28. Middlings Shipment**

30. Electrical Distribution

31. Steam Generation & BFW Treating*

32. Water Systems: Raw, Potable, CW**

33. Fire Systems**

34. Sewers & Waste Treatment**

35. Stack Gas Scrubbing*

36. Instrument Air & Plant Air Systems*

37. Communication System**

38. Inert Gas Systems (Figure 21)

39. Purge & Flush Oil Systems*

41. Buildings**

42. Solid Waste Management**

43. Settling Ponds**

44. Landfill**

15. Oxygen Plant** (Figure 18)

17. Distillate Separation

18. Naphtha Treating & Reforming**

19. Flare System (Figure 19)

20. Tankage**

21. Interconnecting Piping

22. River Facilities**

23. Rail, Truck, Pipeline**

26. Run-of-Mine Coal Receiving & Bulk Storage** (Figure 20)

27. Coal Washing & Secondary Crushing**

28. Middlings Shipment**

30. Electrical Distribution

31. Steam Generation & BFW Treating*

32. Water Systems: Raw, Potable, CW**

33. Fire Systems**

34. Sewers & Waste Treatment**

35. Stack Gas Scrubbing*

36. Instrument Air & Plant Air Systems*

37. Communication System**

38. Inert Gas Systems (Figure 21)

39. Purge & Flush Oil Systems*

41. Buildings**

42. Solid Waste Management**

43. Settling Ponds**

44. Landfill**

The process flow sheets for each of the sections analyzed are given in the figures noted above in parentheses. These figures are in Appendix B. Flow sheets for the other sections were either not available (noted by *) even though these sections impact directly on the overall plant availability, or not considered pertinent (noted by **) since these sections would be effectively decoupled from the rest of the plant by providing adequate storage or are not related critically to the operation.

Figure 1 indicates:

- The number of lines (operating, ready spare and spare) in each plant;
- The capacity of each line in each plant in terms of BPSD total liquid fuel and product;
- Which of these areas must operate in order for the total plant to operate and produce;
- Which of these areas can be decoupled from the critical operating areas (by adequate storage) and hence, can for reasonable periods of time, be down without affecting plant operation and production;
- All other areas are not critical to the plant operation and expected outages would not affect plant operation and production.

PLANT TURNAROUNDS

Major preventive maintenance in refineries and in many chemical process plants is done during periodic plant turnarounds. Based on petroleum refinery experience and on limited H-Coal Pilot Plant experience, ASFI recommended the turnaround schedule outlined in Table 1.

Table 1

Turnaround Schedule

Plant No.	Operation	Turnaround Years Between	Turnaround Duration Weeks	Plant Group
1	Coal Drying and Pulverizing	2	2	H
2	Coal Slurry Preparation	2	1	A
3&4	H-Coal Preheat and Reaction and Primary Separation	1	5-6	A
5	H-Coal Recycle Slurry Preparation	3	2	B
6	Recycle Hydrogen Compression	None		A
7	Gas Plant	3	2	C
8	Cyrogenic Hydrogen Purification	3	2	C
9	Sour Water & Ammonia	3	1	*
10	Sulfur Plant	2	2	G
12	Gasification & Purification	2	4	D,E,F
17	Distillate Separation	3	2	B
18	Naphtha Treating & Reformer	1	2	*

ANT TURNAROUNDS

Major preventive maintenance in refineries and in many chemical process plants is done during periodic plant turnarounds. Based on petroleum refinery experience and on limited H-Coal Pilot Plant experience, ASFI recommended the turnaround schedule outlined in Table 1.

Table 1

Turnaround Schedule

Plant No.	Operation	Turnaround Years Between	Turnaround Duration Weeks	Plant Group
1	Coal Drying and Pulverizing	2	2	H
2	Coal Slurry Preparation	2	1	A
3&4	H-Coal Preheat and Reaction and Primary Separation	1	5-6	A
5	H-Coal Recycle Slurry Preparation	3	2	B
6	Recycle Hydrogen Compression	None		A
7	Gas Plant	3	2	C
8	Cyrogenic Hydrogen Purification	3	2	C
9	Sour Water & Ammonia	3	1	*
10	Sulfur Plant	2	2	G
12	Gasification & Purification	2	4	D,E,F
17	Distillate Separation	3	2	B
18	Naphtha Treating & Reformer	1	2	*

Table 1 (cont'd)

Plant No.	Operation	Turnaround Years Between	Turnaround Duration Weeks	Plant Group
31	Steam Generation & BFW Treating	1	2	I
35	Stack Gas Scrubbing	1	2	I
15	Oxygen Plant			*
27	Coal Washing & Secondary Crushing			*

*These plants do not impact on the overall plant coalability because they are decoupled there from by adequate storage.

A typical turnaround schedule for plant groups, based on the above, is presented in Figure 2. (The plant groups are discussed later, and are composed of process plants having the same number of lines.) This schedule was used to calculate anticipated plant performance over the life of the plant, and during individual time periods (defined by scheduled down times for the various combinations noted in Table 1).

As noted from Figure 2, there are twelve different turnaround patterns over the life of the plant. These are outlined in Table 2.

Table 2

Turnaround Patterns

Turnaround Pattern	Plant Group A	B	C	D	E	F	G	H	I	Duration, Weeks (Year Ending)
1	0	0	0	0	0	0	0	0	0	4 (annually)
2	X	0	0	0	0	0	0	0	0	48(1); 40(2,4,5, etc.); 28(3,5,7, etc.)
3	X	0	0	0	0	0	0	0	X	8(2,6,8,12,14,18, 20,etc.); 4(4,10, 16,22,28,etc.)
4	X	X	X	0	0	0	0	0	X	2(4,10,16,22,28,etc.)
5	X	X	0	0	0	0	0	0	X	2(ditto)
6	X	0	0	X	X	X	X	X	X	6(3,7,9,11,15,17, 21,etc.); 2(5,13, 19,etc.)
7	X	0	0	X	X	X	0	X	X	2(3,5,7,9,11,etc.)
8	X	0	0	X	X	X	0	X	0	4(ditto)
9	X	0	0	X	0	X	0	X	0	4(ditto)
10	X	0	0	X	0	0	0	0	0	4(ditto)
11	X	X	X	X	X	X	X	X	X	2(5,13,19,25,etc.)
12	X	X	0	X	X	X	X	X	X	2(ditto)

X - denotes one line of the group is down for scheduled turnaround.

0 - denotes all lines of the group are available for operation.

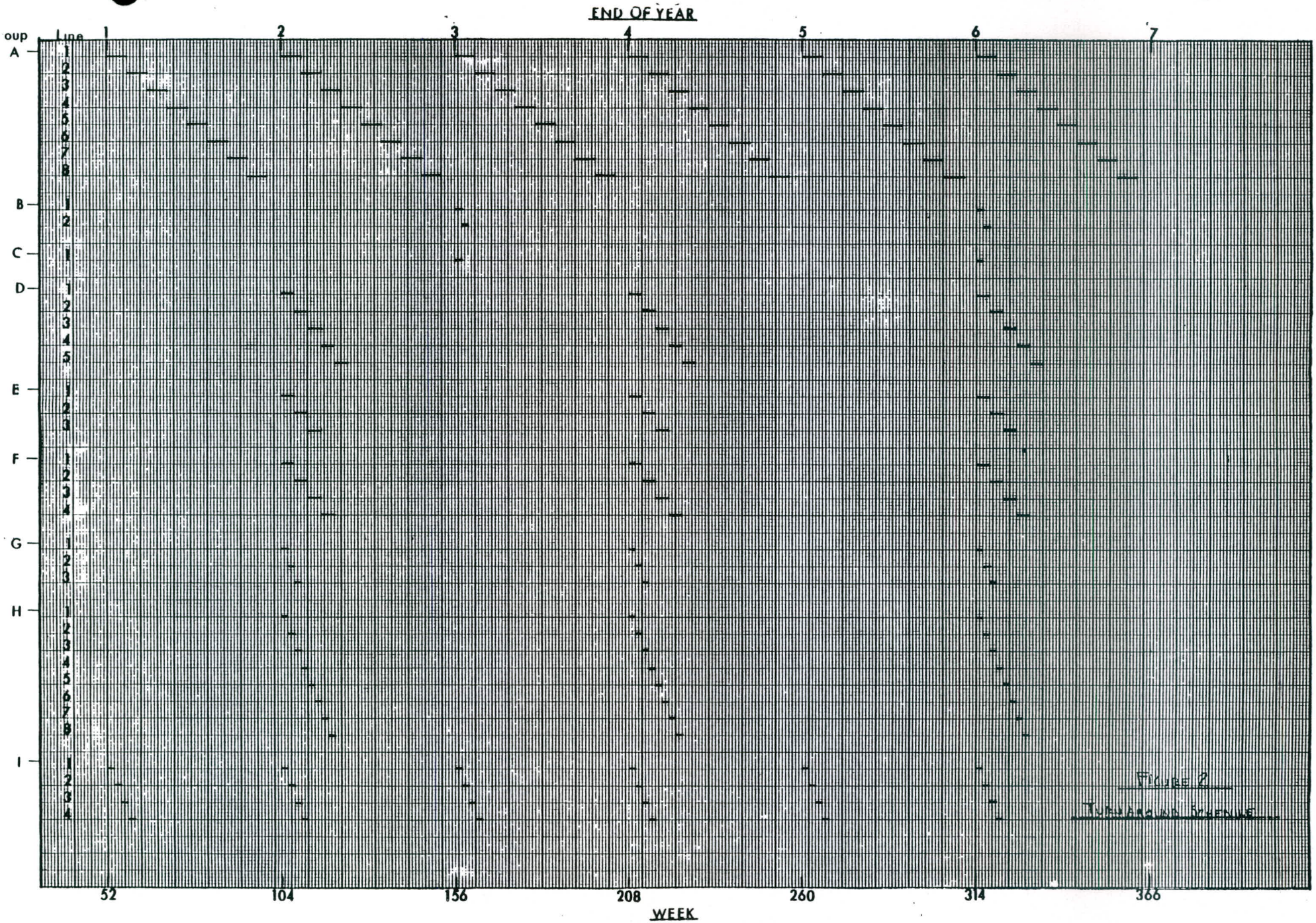

FIGURE 2

TURNAROUND SCHEDULE

RELIABILITY AND AVAILABILITY DATA

The referenced to data for individual pieces of equipment used in this study are given in Table 3.

Table 3

Listing of Reliability and Availability Data

Plant	Table (Appendix A)	Figure (Appendix B)
1	A-1	3
2	A-2	4
3	A-3	5*
4	A-4	6
5	A-5	7
6	A-6	8
7.1	A-7	9
7.2	A-8	10
7.3	A-9	11
8	A-10	13
10	A-11	14*
12.1	A-12	15*
12.2	A-13	16
12.3	A-14	17
17	A-15	

*These figures are confidential and are only included for a limited number of controlled copies of the report.

The equipment cited in these tables are shown in the flow sheets noted.

Unfortunately, pertinent data on average failure rates and repair times are almost non-existent, and recourse to less-than-ideal methods had to be made. The approach taken to fill in the gap was based in a "consensus" opinion of ASFI and EA, guided by extrapolation of past experience with similar equipment.

The question posed regarding reliability for each critical piece of equipment related to "what was the probability that the item would run without failure for some reasonable period of time." Hence, if the consensus estimate was that the item would have an 80% chance of operating 2000 hours without failure, the average failure rate would be estimated by substituting 80% and 2000 hours in equation (5) for the Poisson distribution (see Appendix C). Thus, the probability P, is given by

$$P\ (2000\ \text{hrs.}) = e^{-2000\lambda} = 0.80,$$

and

$$\lambda = 0.000112\ \text{failure/hr.} = 0.112\ \text{failure/K-hrs.}$$

The questions posed regarding availability for each critical piece of equipment related to

- What sequence of events would normally be required to bring the system back to operation;

- How much time is required for each step in this sequence.

The sequence and the time assessments were established by discussions between ASFI and EA.

The above estimates were checked against literature data where possible (e.g., see References).

The reliability-availability data for the Boiler and FGDS (Plants 31 and 35) were not derived from their respective flow sheets. The data for Plant 31 were based on literature reports (Reference 13). It was assumed that Plant 35 would have the same reliability as a typical gas scrubbing system, such as Selexol (Plant 12.3). A separate analysis of the impact of the Boiler and Flue Gas Desulfurizer (FGDS) on production was made based on these data and the projected impact of boiler outages on production, taking into account that the oxygen plant is the prime steam user and is effectively decoupled from the rest of the plant by liquid oxygen storage. This analysis will be covered in a separate report. It indicates that, under these conditions, the boiler and the FGDS have negligible effect on production.

UNSCHEDULED DOWNTIME DATA FOR PROCESS PLANTS

The estimated average failure rate and repair time for each process area are given in Table 4. These are compared with the estimates made in the preliminary study (June 1980).

Table 4

Derived Unscheduled Downtime for Process Plants

Plant		Average Failure Rate, Failures/ K Hrs.	Average Repair Time Hrs./ Failure	Average Unscheduled Outages, Hr. per K Operating Hr This Study	Orig Study
1	Coal preparation	1.577	24.4	38.5	83.0
2	Slurry preparation	0.1338	59.8	8.0	7.0
3	Preheat & reaction	.2613	141.7	37.0	56.2
4	Separation & letdown	.2726	129	35.2	
5	Recycle Slurry oil prep.	.1948	42.7	8.3	10
6	Recycle H_2 compression	.0230	150	3.5	8
7.1	Gas Plant-H_2 compression	.01774	59.6	1.1	
7.2	-DEA Section	.09717	52.6	5.1	8
7.3	-H/C Wash	.193	56.3	10.9	
8	Cyrogenic separation	.230	60.6	13.9	12
10	Claus sulfur plant	.1653	59.3	9.8	14
12.1	Gasification	.2542	175.0	44.5	51
12.2	Shift	.0979	130.5	12.8	27
12.3	H_2 purification	.1956	53.3	10.4	
12.4	H_2 compression	.0552	100.3	5.5	4
17	Distillate separation	.1523	60.2	9.2	9
	Totals	3.93	64.6	253.7	289.2

Table 4

Derived Unscheduled Downtime for Process Plants

Plant		Average Failure Rate, Failures/ K Hrs.	Average Repair Time Hrs./ Failure	Average Unscheduled Outages, Hr. per K Operating Hr This Study	Orig Study
1	Coal preparation	1.577	24.4	38.5	83.0
2	Slurry preparation	0.1338	59.8	8.0	7.0
3	Preheat & reaction	.2613	141.7	37.0	56.2
4	Separation & letdown	.2726	129	35.2	
5	Recycle Slurry oil prep.	.1948	42.7	8.3	10
6	Recycle H_2 compression	.0230	150	3.5	8
7.1	Gas Plant-H_2 compression	.01774	59.6	1.1	
7.2	-DEA Section	.09717	52.6	5.1	8
7.3	-H/C Wash	.193	56.3	10.9	
8	Cyrogenic separation	.230	60.6	13.9	12
10	Claus sulfur plant	.1653	59.3	9.8	14
12.1	Gasification	.2542	175.0	44.5	51
12.2	Shift	.0979	130.5	12.8	27
12.3	H_2 purification	.1956	53.3	10.4	
12.4	H_2 compression	.0552	100.3	5.5	4
17	Distillate separation	.1523	60.2	9.2	9
	Totals	3.93	64.6	253.7	289.2

Average failure rate and repair time estimates for the areas were developed by the "consensus" procedure applied to all the critical items of equipment, as described above and as cited in Appendix A.

The last two columns of Table 4 compare the original estimates for unscheduled outages with those derived in this study. The major increases are in Plants 3, 4, and 7, offset by a decrease in Plant 1. In toto, these account for all the decrease in estimated unscheduled outages. The major part of the decrease is due to decrease in Plant 1 offset by increased in Plants 3, 4, and 7 because of higher estimated outage times per failure, resulting from a more conservative approach to the individual average repair times and to more detailed definition of the plants.

PRODUCTION AVAILABILITY

The estimated production availability for each of the annual turnaround patterns defined in Figure 2 and for the life of the plant is summarized in Table 5. These estimates were derived by applying the methods outlined below in Tables 6 through 10.

Table 6 presents the seven different groups of plants which comprise the H-Coal Plant. This grouping procedure was used in order to reduce the amount of calculations on the reliability-availability data. Each group contains the operating plants which have the same number of operating trains. Each of the operating plants in a group must operate in order for the group to operate. Hence, any loss of a train, either because of a scheduled outage (turnaround) or of an unscheduled outage (equipment failure), will result in a loss of potential capacity of the group, and of the H-Coal Plant.

Table 5

Estimated Annual Production for the H-Coal Plant

Year	Scheduled Weeks for Turnaround Pattern 1	2	3	4	5	6	7	8	9	10	11	12	Production Bbl./Cal. year
1	4	48											17,400,000
2	4	40	8										17,400,000
3	4	28				6	2	4	4	4			16,510,000
4	4	40	4	2	2								16,490,000
5	4	28				2	2	4	4	4	2	2	15,850,000
6	4	40	8										17,400,000
7	4	28				6	2	4	4	4			16,510,000

Note: Patterns and production for years 2 through 7 repeat on a six-year cycle.

Table 6

Plant Grouping for the H-Coal Plant

Group	Plants	Number of Lines
A	2;3;4;6	8 (1 spare)
B	5;17	2
C	7.1;7.2;7.3;8	1
D	12.1	5 (1 hot spare)
E	12.2;12.3	3
F	12.4	4
G	10	3 (1 hot spare)
H	1	8 (2 hot spares)

Table 7 presents the availability parameters for each process operating group. These parameters were derived from data in Table 3.

Table 7

Operating Probabilities for
Each Train in the Process Operating Groups

Group	Plant	Average failure rate per K hrs.	Ave.repair time per failure,hr.	Average Unscheduled outages,hrs per K. hrs.	Probability of running*
A	2;3;4;6	0.6948	120.6	83.8	0.9227
B	5;17	.3417	50.33	17.47	.9828
C	7.1;7.2; 7.3;8	--	--	10.1**	.9900**
D	12.1	.2542	175	44.47	.9574
E	12.2;12.3	.2935	79.0	23.2	.9773
F	12.4	.0552	100.3	5.5	.9945
G	10	.1653	59.3	9.8	.9903
H	1	1.577	24.4	38.4	.9630

*Equal to mean on-stream factor for Area Grouping exclusive of scheduled turnarounds = 1000/(1000 + Avg. unscheduled outages).

**Based on refinery experience.

Table 8 presents the sample calculations for the expected production rate for one turnaround pattern (No. 1) defined in Table 2. This procedure was applied to each turnaround pattern. Table 9 summarizes the production rate for each of the turnaround patterns.

Table 10 presents the sample calculations for the expected production for the year-ending No. 7, based on the expected production rate for each turnaround pattern scheduled for that year. It should be noted that the yearly turnaround patterns repeat on a six year cycle after year-ending No. 1. This procedure was applied to each of the yearly patterns, and the estimated annual production so-calculated are summarized in Table 5.

TABLE 8

CALCULATION OF MEAN EXPECTED PRODUCTION FOR TURNAROUND PATTERN NO. 1

Production Factor, f [1]	Minimum Number of Trains On-Stream for Group								Probability [3] that Minimum No. of Trains will be On-Stream out of Total Available for Group								Probability of "f" or Higher P [4]	ΔP [4]	f×ΔP
	A	B	C	D	E	F	G	H	A	B	C	D	E	F	G	H			
Number of Trains Available →	8	2	1	5	3	4	3	8											
1.000	8	2	1	4	3	4	2	6	0.52540	0.96590	0.99000	0.98335	0.93343	0.97818	0.99972	0.99753	0.44985	0.44985	0.44985
0.900				3								.99928					.45714	.00729	.00656
.875	7								.87752								.76351	.30637	.26807
.833								5								.99988	.76531	.00180	.00150
.750	6					3			.98077					.99982			.87428	.10897	.08173
.667					2			4					.99847			.99999	.93530	.06102	.04068
.625	5								.99807								.95180	.01650	.01031
.600				2								.99999					.95248	.00068	.00041
.500	4	1				2	1	3	.99988	.99970				.99999	.99999	.999999	.98804	.03556	.01778
.375	3								.99999								.98815	.00011	.00004
.333					1			2					.99998				.98964	.00149	.00050
.300				1								.999999					.98965	.00001	–
.250	2					1								.999999			.98966	.00001	–
.167								1											
.125	1																		
0	0	0	0	0	0	0	0	0	1.00000	1.00000	1.00000	1.00000	1.00000	1.00000	1.00000	1.00000			

Notes:

[1] Fraction of total capacity with all available trains running.

[2] Equal to

$$\sum_{Pr=r}^{n} \binom{n}{r} P^k (1-P)^{n-k}$$

where: n = total number of trains available
r = minimum number of trains required
k = number of trains operating ($r \leq k \leq n$)
P = probability that one train of group will operate (see Table 7)

$$\binom{n}{k} = n!/k!(n-k)!$$

[3] Equal to the product of probabilities for Group A through H.

[4] This is the expectancy of achieving the configuration of the system as stated, and is equal to the difference of the probability for the subject configuration and the probability of the immediate preceding configuration.

$\Sigma f \times \Delta P$ = 0.87743

Production = 0.87743 x 60,900B/SD

= 53440B/CD

On-Stream factor = $\frac{53440}{60900}$

= 0.8774

Table 9

Expected Production Rates for Each Turnaround Pattern

Turnaround Pattern	Capacity BPSD	(3) Production % of Full Capacity	(4) Production BPCD	(5) On-Stream Factor, %
1	60900	87.74	53430	87.74
2	53290	77.72	47340	88.83
3	53290	77.72	47340	88.83
4	0	0	0	0
5	30450	48.61	29600	97.22
6	40600	62.83	38260	94.25
7	40600	63.11	38430	94.65
8	40600	63.11	39430	94.65
9	45680	71.02	43250	94.31
10	53290	77.52	47220	88.60
11	0	0	0	0
12	30450	47.88	29160	45.76

Notes: Column (1) - See Table 2

(2) - Based on all scheduled available units running

(3) - Based on all 60900 BPSD (8 H-Coal lines operating

(4) - 60900 x Column (3)/100

(5) - Column (4)/Column (2)

Table 10

Calculation of Expected Production for Seventh Year

(1) Turnaround Pattern No.	(2) Duration Weeks	(3) Expected BPCD	(4) Production Bbls
1	4	53320	1,492,960
2	28	47340	9,278,640
6	6	38260	1,606,920
7	2	38430	538,020
8	4	38430	1,076,040
9	4	43250	1,211,000
10	4	47220	1,312,160
TOTALS	52		16,525,740

Notes: Columns (1), (2) - See Table 2 and Figure 2

(3) - Table 9

(4) - Column (2) x 7 days per week x Column (3)

REFERENCES

1. von Alven, W.H., Editor, Reliability Engineering, Prentice Hall, Inc., Englewook Cliffs, New Jersey, 1964.
2. Breipohl, A.M., Probabilistic System Analysis, John Wiley and Sons, Inc., New York, 1970.
3. Collacott, R.A., Mechanical Fault Diagnosis, Chapman and Hall, London, 1977.
4. Green, A.E. and Bourne, A.J., Reliability Technology, Wiley-Interscience, London, 1972.
5. Kaufmann, A.; Grouchko, D. & Cruon, R., Mathematical Models for the Study of the Reliability of Systems, Academic Press, New York, 1977.
6. Third Reliability Engineering Conference for the Electric Power Industry, Montreal, 1976.
7. Reliability and Maintainability Symposia (AIEE and ASME) Annual Symposia, 1963-1978.
8. Guide to Operating Costs, Petroleum Publishing Company of Tulsa, 1976.
9. Hydrocarbon Processing, Vol. 47, No. 9, p. 152, September 1968.
10. Productivity Costimating No. 55C, Oil and Gas Journal, March 1971.
11. Nelson, W.L., Guide to Refinery Operating Costs, Third Edition, pp. 83-89, The Petroleum Publishing Company, Tulsa, 1976.

12. Tomita, Y., Axial Flow, Blast Furnaces - Top Pressure Turbine, Chemical Economy & Engineering Review, Vol. 10, No. 5-6, May-June 1978.

13. Dickerman, J.C., et al. "Comparison of the Availability and Reliability of Equipment in the Electric Utility Industry," EPA-600/7-79-113, May 1979.

APPENDIX A

Reliability and Availability Data for

Plants

1	Coal Drying and Pulverizing
2	Coal Slurry Preparation
3	H-Coal Preheating and Reaction
4	H-Coal Primary Separation
5	H-Coal Recycle Slurry Preparation
6	H-Coal Recycle Concentration and Compression
7.1	Hydrogen Compression
7.2	DEA Section
7.3	Fractionation
7.4	Refrigeration and Product Sweetening
8	Cryogenic Hydrogen Purification
10	Sulfur Plant
12.1	Gasification
12.2	Shift
12.3	H_2 Purification
12.4	H_2 Compression
17	Distillate Separation

TABLE A-1

System Reliability Analysis of PLANT 1. PULVERIZATION AND DRYING

Client ASF1 Location BRECKINRIDGE PROJECT

Project
Sheet 1 of 1
Date by

Area	Equip. No.	Service and Name	avg. failure rate/k-hrs	avg. maint. hr/failure	series no. (i)	paral. no (ik)	failure effec %cut back	cont. prob%	serv. hrs.	References/comments
1	1D-101	PULVERIZER FEED BINS	.00066	32	1			90	160k	
	1T-101	WEIGH FEEDER	.0276	8	2			80	8K	
	1Y-101	PULVERIZER	.558	16	3			80	.4K	
	1F-102A	AMBIENT AIR FAN	.01317	16	4			90	8K	
	1F-101A	COMBUSTOR	.0066	50	5			90	16K	
	1K-102A	SEAL AIR FAN								Should combine w/1F-102A
	1Y-102A	CYCLONE	.00556	50	6			90	20K	
	1K-101	MAIN EXHAUSTER	.01317	24	7			90	8K	
	1Y-103	BAG FILTER	.0558	4	8			80	.4K	
	1T-104	MASS FLOW CONVEYOR								
	1T-105	" " ELEVATOR	.0279	24	9			80	8K	
	1T-106	" " BIN FEED CONVEYOR								
	1Y-104A	RETURN N2 BAG FILTER	.0558	4	10			80	4K	
	1Y-105	BUNKER TOP BAG FILTER COLLECTOR	.0279	2	11			80	8K	
	1T-109A	FLUIDIZING PADS	.00139	24	12			80	160K	
	1D-102	COAL DUST BUNKER A, B, C, D	.00066	50	13			90	160K	
	1K-104A	RETURN N2 FAN	.01317	24	14			90	8K	Spare motor } combine
	1K-105A	N2 COMPRESSOR	.01317	50	15			90	8K	" " }
	1Y-106	PNEUMATIC PUMPS 111 A, B, C	.558	16		11, 12		80	.4K	
	1D-103	SERVICE BUNKER A, B 11	.00066	24	16			90	160K	
	1D-104	VIBRATING BIN BOTTOM A, B, 11	.0276	50	17			80	8K	
	1T-110	WEIGH FEEDER A, B	.223	50		21, 22		80	1K	
	1T-110	AUGER FEEDER	.223	50	18			80	1K	
		Σ Series	1.07181	23.38 hr/fail		–	25.06 hr/k-hr			
		Σ Parallel	.50559	26.41 hr/fail		–	13.35 hr/k-hr			
		Σ All	1.57734	24.35 hr/fail		–	38.413 hr/k-hr			

TABLE A-2

System Reliability Analysis of PLANT 2. COAL SLURRY Preparation. No of LINES 8

Client ASFT Location BRECKINRIDGE PROJECT

Project 7811
Sheet 1 of 1
Date _____ by EA

Area	Equip. No.	Service and Name	avg. failure rate/k-hrs	avg. maint. hr/failure	series no. (i)	paral. no (jk)	failure effec %cut back	cont. prob%	serv. hrs.	References/comments
2.0	C-102	SLURRY SURGE TANK (8)	.0112	50	1			80	20k	
	G-102	SLURRY MIX PUMP (16) (8)	.0105	[illegible]		[illegible]		10	10k	
	C-103	SLURRY MIX TANK VENT SCRUBBER (8)	.0272	100	2			80	8k	
	LICA	SLURRY MIX TANK LEVEL CONTROL (8)	–							
	FRC	SCRUBBER FLOW [illegible] (8)	–							
	E-101	SLURRY MIX TANK OVERHEAD CONDENSER (8)	.01317	50	3			90	8k	
	C-101	SCRUBBER [illegible]	.0025	24	4			90	40k	
	PIC	O.V. RECEIVER PRESSURE CONTROL (8)								
	LICA	O.V. RECEIVER PRESSURE LIQUID LEVEL CONTROL								
	G-101	O.V. SLURRY RECEIVER CONDENSATE PUMP (16)	.0211	16		21,22		80	8k	
	E-102	PRE-WETTING OIL COOLER (8)	.01317	50	5			90	8k	
	FRC	FLOW RECORDER CONTROLLER (24)								
	TRC	TEMP RECORDER CONTROLLER (8)								
		HOPPER	.00066	100	6			90	160k	
		POCKET FEEDER	.0558	50		31,32		80	4k	
		PUGMILL								
		VORTEX MIXER	.0558	50	7			80	4k	
		Σ series	.1245	7.585 hr/k-hr		608 hr/failure				
		Σ Parallel	.01344	0.5644	"	43.0	"			
		Σ All	.13379	8.15	"	59.8	"			

TABLE A-3

System Reliability Analysis of PLANT 3. (PREHEATING & REACTION) No of LINE - 8

Client ASFI Location BRECKINRIDGE PROJECT

Project [illegible]
Sheet 1 of 2
Date _____ by EA

Area	Equip. No.	Service and Name	avg. failure rate/K-hrs	avg. maint. hr/failure	series no. (i)	paral. no (jk)	failure effec. %cut back	cont. prob%	serv. hrs.	References/comments
3	PIC	PRESSURE CONTROL								
	G-101	SLURRY FEED PUMP (16 run) 2 spare	.149	150		11,12,13		80	1.5K	
	G-801									
	HCV	HOT OIL CONTROL VALVE (Millivolts)	–							
	F-102	DOUBLE [illegible] FIRED HEATER (8) (2) [illegible]	.0234	150	1			90	4.5K	
	TRC	TEMPERATURE CONTROL DEVICE (8)	–							
	G-102	EBULLATING PUMP (8)	.0558	100	2			80	4K	
	C-101	H-COOL REACTOR (8)	.0558	200	3			80	4K	
	C-102	REACTOR PRODUCT SEPARATOR (8)	.0117	200	4			90	9K	
	LICA	SEPARATOR LIQUID CONTROL VALVE (16)	–							
	E-101	REACTOR EFFLUENT VAPOR - H_2 EXCHANGER (16)	.0132	150	5			90	8K	* Potential high fouling NH4Cl
	E-102	EFFLUENT VAPOR-HOT OIL EXCHANGER (8) FROM 4E-101	.0132	150	6			90	8K	
	FRC	FLOW RECORD CONTROL VALVE (5)	–							(HYDROGEN HEATING)
	F-101	HYDROGEN HEATER (8)	.00930	150	7			84	24K	
	TRC	FIRED HEATER TEMPERATURE CONTROL (8)								
	C-113	BOILER FEED WATER DRUM (8)	.0022	24	8			90	48K	
	G-108	BOILER FEED WATER CIRCULATING PUMPS (16)	.0279	16		21,22		80	8K	
	FRC	FLOW RECORD CONTROL VALVE (16)	–	–						
	BFW	BOILER FEEDWATER LIQ. CONTROL VALVE (8)	–	–						
	C-111	HOT OIL CIRCULATING DRUM (8)	.0022	50	9			90	48K	
	G-106	HOT OIL CIRCULATING PUMP (16)	.0279	16		31,32		80	8K	
	FRCA	FLOW RECORD CONTROL VALVE (16)	–							
	E-106	STEAM GENERATOR EXCHANGER (8)	.0105	24	10			90	10K	
	C-112	HOT OIL SUMP DRUM (8)	.0022	24	11			90	48K	
	C-107	VERTICAL SUMP PUMP (8)	.0279	16		41,42		80	8K	
	PRC	PRESSURE CONTROL (8) (200 PSIG STEAM)								
	LICA	LIQUID LEVEL CONTROL (STEAM GEN.) (8)	–							
		SERVICES								
		REFINERY GAS & MEDIUM BTU GAS								
	FRC	FLOW CONTROL VALVE (16)								
		SEAL OIL (32)	–							
	C-103	CATALYST HOPPER (DAILY CATALYST MAKE UP) (8)	–							
	C-109	CATALYST TRANSPORT OIL TANK (8)								
	G-104	CATALYST TRANSPORT OIL PUMP (8)	.0279	16		51,52		80	8K	
	HCV	HAND CONTROL VALVE (8)								
	PIC	PRESSURE CONTROL (8)								
	C-104	CATALYST ADDITION DRUM (8)	.0011	50	12			80	200K	
	C-105	CATALYST WITHDRAWAL DRUM (8)	.0011	50	13			80	200K	
	C-107	CATALYST COOLING DRUM	.0011	50	14			80	200K	
	G-104	CIRCULATING OIL EXCHANGER (8)								
	E-105	CIRCULATING OIL COOLER (8)								
	Y-101	CIRCULATING OIL FILTER (8)								
	C-110	CIRCULATING OIL SURGE DRUM								

System Reliability Analysis of PLANT 3 (cont.) No of Lines 8

Client ASFI Location BRECKINRIDGE PROJECT

Project 781
Sheet 2 of 2
Date _____ by EA

Area	Equip. No.	Service and Name	avg. failure rate/k-hrs	avg. maint. hr/failure	series no.(i)	paral. no(jk)	failure effec %cut back	cont. prob%	serv. hrs.	References/comments
3	G-103	CIRCULATING OIL PUMP (8)	0.0277	16		61.62		80	8k	
	FIC	FLOW CONTROL DEVICE (8)	—							
	E-103	CIRCULATING OIL HEATER (8)	—							
	C-106	CATALYST WITHDRAWL VAPOR SEPARATOR DRUM (8)	.0011	50	15			80	50k	
	PDIC	PRESSURE CONTROL DEVICE (8)								
	LIC	LIQUID LEVEL CONTROL (8)								
	C-108	CATALYST DUMP TANK (8)								
	G-105	CATALYST HOLDING PUMP (8)								
		Σ series	0.2017	28.6 hr/k-hr		- 141.7 hr/failure				
		Σ Parallel @ 4k	.05958	8.5 hr/k-hr		- 141.8 hr/failure				
		Σ All @ 4k	.2613	37.0 hr/k-hr		- 141.7 hr/failure				

A-4

TABLE A-4

System Reliability Analysis of PLANT 4 (PRIMARY SEPARATION) No of LINES 8

Client ASFI Location BRECKINRIDGE PROJECT

Project 7211
Sheet 1 of 2
Date _____ by EA

Line 4	Equip. No.	Service and Name	avg. failure rate/k-hrs	avg. maint. hr/failure	series no. (i)	paral. no (jk)	failure effec %cut back	cont. prob%	serv. hrs.	References/comments
		FROM 3E-102								
	C-102	HIGH PRESSURE WARM FLASH DRUM (7R)(150)	0.00437	150	1			90	24K	
	E-101	H2 RICH STEAM-REACTOR FEED GAS EXCH. (7R)(1)	.01317	150	2			90	8K	
	E-102	H2 RICH STEAM AIR COOLER (7)(1)	.01317	150	3			90	8K	
	C-103	HIGH PRESSURE COLD FLASH DRUM (7)(1)	.0011	150	4			80	200K	
	HCV	HAND CONTROL VALVE (7)(1)	–							
	FRC	FLOW RECORD CONTROL (7)(1)	–							
	PRC	PRESSURE RECORD CONTROL (7)(1)	–							
	LICA	WATER INTERFACE LEVEL CONTROL (7)(1)	–							
	C-109	SOUR WATER SURGE DRUM (7)(1)	.0011	50	5			80	200K	
	LICA	WATER SURGE DRUM LEVEL CONTROL (7)(1)	–							
	G-104	SOUR WATER PUMP (14)(2)	.0279	16		11,12		80	8K	
		FROM C-102								
	LICA	LIQUID LEVEL CONTROL (7)(1)								
	E-103	HIGH PRESSURE FLASH CONDENSATE AIR COOLER (7)(1)	.01317	150	6			90	8K	
	TRCA	TEMPERATURE CONTROL DEVICE (7)(1)	–							
	C-105	INTERMEDIATE PRESSURE SLURRY FLASH DRUM (7)(1)	.0011	100	7			80	200K	
	E-104	INT. PRESS. VAPOR-LOW PRESS. CONDENSATE EXCHA. (7)(1)	.01317	100	8			90	8K	
	TRC	TEMP. RECORD CONTROL (7)(1)								
	C-101	INT. PRESS. WARM FLASH DRUM (7)(1)	.0011	24	9			80	200K	
	E-106	INT. PRESS. WARM FLASH VAPOR AIR COOLER (7)(1)	.01317	48	10			90	8K	
	C-104	INT. PRESS. COLD FLASH DRUM (7)(1)	.0011	50	11			80	200K	
		FROM C-105								
	LICA	LIQUID LEVEL CONTROL								
	C-806	LOW PRESSURE SLURRY FLASH DRUM (7)(1)	.0011	50	12			80	200K	
	E-107	LOW PRESSURE VAPOR-LOW PRESS CONDENSA EXCH (7)(1)	.01317	50	13			90	8K	
	E-108	KETTLE EXCH. STEAM GENERATOR (7)(1)	.01317	50	14			90	8K	
	PRC	PRESSURE RECORD CONTROL (7)(1) KETTLE								
	LICA	LIQUID LEVEL CONTROL (7)(1) EXCH.								
	C-107	LOW PRESS. WARM FLASH DRUM (7)(1)	.0011	50	15			80	200K	
	LICA	LIQUID LEVEL INT. PRESS. WARM FLASH DRUM (7)(1)	–							
	E-110	LOW PRESS. VAPOR AIR COOLER (7)(1)	.01317	50	16			90	8K	
	LICA	INT COLD FLASH DRUM LIQ LEVEL CONTROL (7)(1)	–							
	C-108	LOW PRESSURE COLD FLASH DRUM (7)(1)	.0011	50	17			80	200K	
	LICA	LOW PRESS. LIQUID LEVEL CONTROL (7)(1)								
	G-103	LOW PRESS. COLD FLASH CONDENSATE PUMP (14)(2)	.0279	24		21,22		80	8K	
	G-101	L.P. FLASH SLURRY TRANSFER PUMP (14)(2)	.0279	16		31,32		80	8K	
	LICA	L.P. FLASH SLURRY DRUM LIQ. LEVEL CONTROL (14)(7)	–							
	G-102	HEAVY OIL DISTILLATE DIST. FEED PUMP (14)(2)	.0279	16		41,42		80	8K	
	LICA	L.P. WARM FLASH LIQUID LEVEL CONTROL (14)(2)								
	G110	WASH WATER RECEIVER (7)(1)	.0011	20	18			90	200K	
	G-105	HIGH PRESS. WATER WASH PUMP (14)(2)	.0279	24		51,52		80	8K	
		SERVICES								
		SEAL OIL								
	LICA	BOILER FEED WATER LIQUID LEVEL CYCLE								
	LICH	HI PRESSURE LET DOWN	.2231	200		61,62		80	1K	
	I	INT. PRESSURE LET DOWN	.1116	100		71,72		80	2K	
	L	LOW PRESSURE LET DOWN	.0558	50		81,82		80	4K	

System Reliability Analysis of PLANT 4 Cont. No of LINES 8

Client ASFI Location BRECKINRIDGE PROJECT

Project 78/1
Sheet 2 of 2
Date _____ by EA

Area	Equip. No.	Service and Name		avg. failure rate/k-hrs	avg. maint. hr/failure	series no. (i)	paral. no(jk)	failure effec %cut back	cont. prob%	serv. hrs.	References/comments
			Σ Series	0.1065	98.4 hr	failure	-	10.5 hr/k-hr.			
			Σ Parallel	.1661	149.1 hr	failure	-	24.8 hr/k-hr.			
			Σ All	.2726	129.3	"	-	35.2 hr/k-hr.			

TABLE A-5

System Reliability Analysis of PLANT 5 (RECYCLE SLURRY PREPARATION) No. of Lines 2

Project 781
Sheet 1 of 2
Date _____ by EA

Client ASFI Location BRECKINRIDGE PROJECT

area	Equip. No.	Service and Name	avg. failure rate/k-hrs	avg. maint. hr/failure	series no.(i)	paral. no(jk)	failure effec %cut back	cont. prob%	serv. hrs.	References/comments
5	C-101	HYDROCLONE FEED CONTROL DRUM	.00439	50	1			90	24K	
	G-101	HYDROCLONE FEED PUMP	.0558	16		11,12		80	4K	
	FRCV	FEED DRUM OVERFLOW FLOW CONTROL VALVE	-							
	PICV	PRESSURE CONTROL VALVE	-							
	Y-101	HYDROCLONES	.0263	24	2			80	4K	
	C-107	HYDROCLONE OVERFLOW DRUM	.00439	50	3			90	24K	
	G-113	HYDROCLONE OVERFLOW DRUM PUMP	.0558	16		21,22		80	4K	
	LICV	OVERFLOW DRUM LIQUID LEVEL CONTROL VALVE	-							
	C-102	APPROACH TOWER	.01317	100	4			90	8K	
	G-102	TOWER BOTTOMS PUMP	.0558	16		31,32		80	4K	
	LICV	TOWER BOTTOMS LIQUID LEVEL CONTROL VALVE	-							
	C-104	TOWER	.01317	100	5			90	8K	
	G-106	VACUUM BOTTOMS PUMP	.0558	16		41,42		80	4K	
		HYDROCLONE OVERFLOW FROM Y-101	.00439	50	6			90	24K	
	G-101	HYDROCLONE OVERFLOW DRUM PUMP	.0279	16		51,52		80	8K	
	LICV	OVERFLOW DRUM LIQUID LEVEL CONTROL VALVE	-							
	C-109	HYDROCLONE OVERFLOW FLASH DRUM	.0011	50	7			80	200K	
	LICV	FLASH DRUM LIQUID LEVEL CONTROL VALVE	-							
	C-110	HYDROCLONE OVERFLOW VACUUM FLASH DRUM	.0011	50	8			80	200K	
	G-111	VACUUM FLASH DRUM PUMP	.0279	16		61,62		80	8K	
	FRCV	VACUUM FLASH DRUM FLOW CONTROL VALVE	-							
	E-106	VACUUM FLASH CONDENSER I FROM C-110	.01317	50	9			90	8K	
	E-107	VACUUM FLASH CONDENSER II	.01317	50	10			90	8K	
	C-112	HYDROCLONES OVERFLOW VACUUM FLASH CONDENSATE DRUM	.0011	24	11			80	200K	
	G-112	CONDENSATE DRUM PUMP	.0279	16		71,72		80	8K	
	LICA	CONDENSATE DRUM LIQUID LEVEL CONTROL VALVE	-							
		from E-112								
	PIG	PRESSURE CONTROL VALVE	-							
	H-102	VACUUM FLASH EJECTOR SYSTEM	.01317	50	12			90	8K	
	C-111	VACUUM JET CONDENSATE DRUM	.0011	24	13			80	200K	
	G-115	CONDENSED HYDROCARBONS PUMP	.0279	16		81,82		80	8K	
	LICA	HYDROCARBONS LEVEL CONTROL								
	G-116	CONDENSED WATER PUMP	.0279	16		91,92		80	8K	
	LICA	WATER LEVEL CONTROL								
		FROM E-106								
	PRG	PRESSURE RECORD CONTROL								
		FROM E-107								
	PRG	PRESSURE RECORD CONTROL								
		FROM 103								
	C-113	VACUUM TOWER START UP HEATER SURGE DRUM								
	G-117	START UP HEATER FEED PUMP								
	E-101	VACUUM TOWER START UP HEATER								
	FRC	FLOW RECORD CONTROL								
	TRC	TEMPERATURE RECORD CONTROL								

System Reliability Analysis of PLANT 5 (Cont.) No of LINES 2

Client ASFI Location BRECKINRIDGE PROJECT

Project 7811
Sheet 2 of 2
Date _____ by EA

Area	Equip. No.	Service and Name	avg. failure rate/k-hrs	avg. maint. hr/failure	series no. (i)	paral. no(jk)	failure effec % cut back	cont. prob %	serv. hrs.	References/comments
5		FROM 104								
	G-107	TOWER WASTE HEAT BOILER PUMP	.0279	16		101,102		80	8k	
	FRG	FLOW RECORD CONTROL								
	E-108	TOWER PUMP AROUND WASTEHEAT BOILER	.01317	50	14			90	8k	
	E-109	VACUUM TOWER PUMP AROUND COOLER	.01317		15			90	8k	
	TRC	TEMPERATURE RECORD CONTROL								
	H-101	VACUUM TOWER EJECTOR SYSTEM								
	C-114	VACUUM OVERHEAD SEPARATOR	.0011	24	16			80	700k	
		SERVICES								
		BFW (298°F) LIQUID LEVEL CONTROL (3)								
		SEAL OIL (8) lines								
		STEAM FLOW RECORD CONTROL (650°F 715PSI) (3)								
		STEAM (150 PSIG) (2 lines)								
		FUEL GAS (PRESSURE CONTROL DEVICES)								
		STEAM PRODUCED PRESSURE CONTROL (3)								
		Σ Series	.13716	54 hr/failure			7.405 hr/k-hr.			
		Σ Parallel	.05766	16 hr/failure			99%	"		
		Σ All	.19482	42.74 hr/failure			8.325 hr/k-h.			

A-8

TABLE A-6

System Reliability Analysis of PLANT 6. (RECYCLE GAS COMPRESSION) No of LINES 8

Client ASFI Location BRECKINRIDGE PROJECT

Project 78/1
Sheet 1 of 1
Date _____ by EA

Area	Equip. No.	Service and Name	avg. failure rate/k-hrs	avg. maint. hr/failure	series no. (i)	paral. no(jk)	failure effec %cut back	cont. prob%	serv. hrs.	References/comments
0	C-101	COMPRESSOR SUCTION SURGE [illegible] (8)	.0011	150	1			80	200K	
	K-101A	HYDROGEN RECYCLE COMPRESSOR (8)	.0273	150		[illegible]		80	8K	
	FCV	FLOW CONTROL VALVE (8)								
	[illegible]	[illegible] (8)	.01217	150	2			90	8K	
		Σ Series	.01477	150	2.1[illegible]					
		Σ Parallel	.00873	150	1.31 "					
		Σ All	.02[illegible]	150	3.4[illegible] "					

TABLE A-7

System Reliability Analysis of PLANT 7.1 PURIFIED H_2 GAS COMPRESSION. No of LINES 1

Client ASF I Location BRECKENRIDGE PROJECT

Project 7811
Sheet 1 of 1
Date _____ by EA

Area	Equip. No.	Service and Name	avg. failure rate/k-hrs	avg. maint. hr/failure	series no. (i)	paral. no (jk)	failure effec %cut back	cont. prob%	serv. hrs.	References/comments
7	C-106	EXPANDER K.O. DRUM	.0011	100	1			90	200K	
	LC	LIQUID CONTROL								
	E-104	EXPANDER FIRST STAGE PREHEATER	.00.66	100	–			90	16K	not critical to operation
	TC	TEMPERATURE STEAM CONTROLLER								
	K-102	TURBO EXPANDER FIRST STAGE	.0093	150	–			80	24K	" " " "
	E-105	EXPANDER 2ND STAGE PREHEATER	.0066	100	–			90	16K	" " " "
	T-C	TEMPERATURE CONTROL	–							
	K-105	TURBO EXPANDER 2ND STAGE	.0093	150	–			80	24K	" " " "
	P-C	PRESSURE CONTROL VALVE	–							
	E-101	AUTO SURGE COOLER	.01317	50		11,12,13		90	8K	
	C-101	FIRST STAGE K.O. DRUM	.0011	150		11,12,13		80	200K	
	K-101	GAS COMPRESSOR (2 STAGES)	.0279	150		11,12,13		80	8K	
	E-102	FIRST STAGE INTERCOOLER	.01317	50		41,42,43		90	8K	
	C-103	FIRST INTERSTAGE SEPARATOR	.0011	100		41,42,43		80	200K	
	E-103	2ND STAGE INTERCOOLER	.01317	50		71,72,73		90	8K	
	C-104	2ND STAGE SEPARATOR	.0011	100		71,72,73		80	200K	
	G-103	2ND STAGE SEPARATOR CONDENSATE PUMP	.0279	16		71,72		80	8K	
	LIC	" " " LIQUID LEVEL CONTROL								
	C-105	SOUR WATER FLASH DRUM	.0011	50	2			80	200K	
	P&C	PRESSURE CONTROL DEVICE } SOUR WATER DRUM								
	LIC	LIQUID CONTROL DEVICE								
	G-102	1ST STAGE SEPARATOR CONDENSATE PUMP	.0279	16		81,82		80	8K	
	LIC	" " LIQUID LEVEL CONTROL								
	G-104	1ST STAGE K.O. DRUM CONDENSATE PUMP	.0279	16		91,92		80	8K	
	FC	1ST STAGE FLOW CONTROLLER								
	PC	1ST STAGE K.O DRUM PRESSURE CONTROLLER								
		Σ Series	0.0022	75 hr/failure			0.165 hr/K-hr			
		Σ Parallel	0.01554	57.4	"		0.893	"		
		Σ All	0.01774	59.6	"		1.058	"		

TABLE A-8

System Reliability Analysis of 7.2 (DEA SECTION) No of LINES 1

Client ASTI Location BRECKINRIDGE PROJECT

Project 7811
Sheet 1 of 2
Date _____ by EA

area	Equip. No.	Service and Name	avg. failure rate/k-hrs	avg. maint. hr/failure	series no. (i)	paral. no(jk)	failure effec %cut back	cont. prob%	serv. hrs.	References/comments
7	C-111	DEA ABSORBER (1) (sheet)	.0026	200	1			90	40K	
	G-117	WATER WASH CIRCULATION (2)	.0279	16		11,12		80	8K	
	LIC	LEVEL INSTRUMENT CONTROL (2)								
	C-108	DEA AEROSOL K.O. DRUM (incl. w/C-111)	-	-	-			—	-	
	LAH	LEVEL ALARM CONTROL								
	G-113	LEAN DEA PUMP (2)	.0279	16		21,22		80	8K	
	FIC	FLOW CONTROL								
	C-117	HYDROGEN PURGE DRYER K.O. DRUM	.0011	50	3			80	200K	
	LIC	HYDROGEN K.O. DRUM LEVEL CONTROL	-							
	E-111	LEAN DEA TRIM COOLER	.01317	50	4			90	8K	
	E-116	LEAN DEA COOLER	.01317	50	5			90	8K	
	TIC	TEMPERATURE CONTROL DEVICE								
	C-113	RICH DEA FLASH DRUM	.0011	50	6			80	200K	
	PIC	PRESSURE CONTROL DEVICE								
		(2) sheet								
	V-112	ANTIFOAM INJECTION PACKAGE								
	FIC	LEAN DEA FLOW CONTROL INSTRU								
	V-111	PRECOAT FILTER (PACKAGE)								
	PDI	PRESSURE CONTROL DEVICE								
	V-115	ACTIVATED CARBON TREATER PACKAGE								
	FIC	ACT. CARBON TREA FLOW CONTROL DEVICE								
	PDI	PRESSURE CONTROL INSTR.								
	D-102	DEA SUMP TANK								
	G-111	DEA SUMP PUMP								
	LCHL	SUMP TANK LIQUID LEVEL CONTROL								
	TIC	" " TEMPERATURE CONTROL DEVICE								
	G-114	LEAN DEA BOOSTER PUMP (2)	.0279	16		31,32		80	8K	
		3(sheet)								
	D-101	DEA SURGE TANK	.0011	50	7			80	200K	
	PCV	SURGE TANK PRESSURE CONTROL DEVICE								
	E-112	RICH-LEAN DEA EXCHANGER	.0066	50	8			90	16K	
		SERVICES								
	TIC	STEAM TEMP. CONTROL								
	FQI	STEAM CONDENSATE FLOW CONTROL								
	PSV	PRESSURE VALVE								
		(4 sheet)								
	Y	DEA REGENERATOR STEAM DESUPERHEATER								
	FIC	STEAM GEN. FLOW CONTROL								
	E-113	DEA REGENERATOR REBOILER	.01317	50	9			90	8K	
	C-119	STEAM CONDENSATE RECEIVER	.0011	25	10			90	200K	
	G-116	STEAM CONDENSATE PUMP (2)	.0279	16		41,42		80	8K	
	C-114	DEA REGENERATOR	.0026	200	11			90	40K	
	LIC	LIQUID LEVEL CONTROL								
	TIC	TEMPERATURE CONTROL DEVICE								
	PIC	PRESSURE CONTROL DEVICE								
	V-113	CORROSION INHIBITOR PACKAGE								
	PIC	PRESSURE CONTROL								

System Reliability Analysis of 7.2 (cont.) (DEA SECTION) No. of LINES 1

Client ASFI Location BRECKINRIDGE PROJECT

Project 7811
Sheet 2 of 2
Date _____ by EA

Area	Equip. No.	Service and Name	avg. failure rate/K-hrs	avg. maint. hr/failure	series no. (i)	paral. no (jk)	failure effec % cut back	cont. prob %	serv. hrs.	References/comments
7		(Sheet 6)								
	C-116	FUEL GAS DEA ABSORBER	.0026	200				90	40K	Not critical to operation
	C-109	FUEL GAS DEA ABSORBER K.O. DRUM	.0011	25				80	200K	d.ito
	LIC	LIQUID LEVEL CONTROL								
	FIC	FLOW CONTROL DEVICE								
	G-118	WATER WASH CIRCULATION PUMP (2)	.0279	16				80	8K	d.ito
	C-118	FUEL GAS (K.O) DRUM	.0011	25				80	200K	d.ito
	LSH	F. GAS K.O. DRUM LIQUID LEVEL CONTROL								
	PIC	F. GAS K.O. DRUM PRESSURE VALVE								
		(Sheet 5)								
	E-114	DEA REGENERATOR OVHD CONDENSER	.01317	50	16			90	8K	
	E-117	DEA REGENERATOR OVHD TRIM COOLER	.01317	50	17			90	8K	
	C-115	DEA REGENERATOR OVHD SEPARATOR	.0011	25	18			80	200K	
	PIC	PRESSURE CONTROL INSTR.								
	LIC	LIQUID LEVEL CONTROL INSTR.								
	G-115	REGENERATOR REFLUX PUMP	.0279	16		51,52		80	8K	
	FIC	FLOW CONTROL DEVICE								
		Σ Series	0.08315	58.8 hr/failure			4.89 hr/K-hr			
		Σ Parallel	.01402	16.0 " / "			0.22 "			
		Σ All	.09717	52.6 "			5.11 "			

A-12

TABLE A-9

System Reliability Analysis of PLANT 7, PRODUCT FRACTIONATION

Client AFI Location BRECKINRIDGE PROJECT

Project 7811
Sheet 1 of 2
Date _____ by EA

Area	Equip. No.	Service and Name	avg. failure rate/k-hrs	avg. maint. hr/failure	series no. (i)	paral. no(jk)	failure effec %cut back	cont. prob%	serv. hrs.	References/comments
7	E-145	PURGE GAS-FUEL GAS EXCHANGER	.00439	50	1			90	24K	
	E-135	INITIAL COOLER	.00439	50	2			90	24K	
	C-130	INITIAL SEPARATOR	.0011	24	3			80	200K	
		GAS DRYING AND FILTERING IN OTHER SHEET								
	E-138	PURGE GAS-HYDROGEN EXCHANGER	.00439	50	4			90	24K	
	E-141	INTER. DRY PURGE GAS-FUEL GAS EXCHANG.	.00439	50	5			90	24K	
	E-122	INTERMEDIATE COOLER	.00439	50	6			90	24	
	C-131	BUTANE WASH COLUMN	.00260	100	7			90	40K	
	E-147	BUTANE WASH OVERHEAD COOLER	.00439	50	8			90	24K	
	E-139	PURGE GAS-HYDROGEN GAS EXCHANGER (B)	.00439	50		9,11,13		90	24K	
		" " " " (C)								
	E-136	FINAL COOLER	.00439	50	9			90	24K	
	C-123	PROPANE WASH COLUMN	.00260	100	10			90	40K	
	C-122	DEETHANIZER	.00260	100	11			90	40K	
	E-137	DEETHANIZER OVERHEAD CONDENSER	.00439	50	12			90	24K	
	C-121	DEETHANIZER OVERHEAD SEPARATOR	.0011	24	13			80	200K	
	G-121	DE-C2 REFLUX PUMP	.0279	16		21,22		80	8K	
	E-121	DEETHANIZER REBOILER	.00439	50	14			90	24K	
	E-124	DEBUTANIZER BOTTOMS-FEED EXCHANGER	.00439	50	15			90	24K	
	C-124	DEBUTANIZER	.0026	100	16			90	40K	
	E-125	DEBUTANIZER REBOILER	.00439	50	17			90	24K	
	E-126	DE-C4 OVERHEAD CONDENSER	.01317	50	18			90	8K	
	C-125	DE-C4 OVERHEAD SEPARATOR	.0011	24	19			80	200K	
	G-124	DE-C4 REFLUX PUMP	.0279	16		31,32		80	8K	
	G-120	INITIAL CONDENSATE PUMP	.0279	16		41,42		80	8K	
	E-167	AIRCO RETURN COOLER	.01317	50	20			90	24K	
	C-119	DE-C2 FEED DRUM	.0011	24	21			80	200K	
	E-131	SPLITTER BOTTOMS-FEED EXCHANGER	.00439	50	22			90	24K	
	C-128	NAPHTHA SPLITTER	.0026	100	23			90	40K	
	E-132	SPLITTER REBOILER	.00439	50	24			90	24K	
	E-133	SPLITTER OVERHEAD CONDENSER	.0279	50	25			80	8K	
	C-129	SPLITTER OVERHEAD SEPARATOR	.0011	24	26			80	200K	
	G-126	NAPHTHA SPLITTER REFLUX PUMP	.0279	16		51,52		80	8K	
	E-141	LIGHT NAPHTHA COOLER	.01317	50	27			90	8K	
	E-127	DE-C3 BOTTOMS-FEED EXCHANGERS	.00439	50	28			90	24K	
	E-130	BUTANE PRODUCT COOLER	.01317	50	29			90	8K	
	C-136	DEPROPANIZER	.0026	100	30			90	40K	
	E-128	DEPROPANIZER REBOILER	.00439	50	31			90	24K	
	E-129	DE-C3 OVERHEAD CONDENSER	.01317	50	32			90	8K	
	C-121	DE-C3 " SEPARATOR	.0011	24	33			80	200K	
	G-125	DE-C3 REFLUX PUMP	.0279	16		61,62		80	8K	
	E-192	PROPANE COOLER	.00439	50	34			90	24K	
	E-142	PROPANE COOLER	.00439	50	35			90	24K	
	G-130	BUTANE WASH PUMP	.0279	16		71,72		80	8K	
	E-123	BUTANE WASH COOLER	.00439	50	36			90	24K	
	G-127	HEAVY NAPHTHA PRODUCT PUMP	.0279	16		81,82		80	8K	

System Reliability Analysis of PLANT 12 PRODUCT FRACTIONATION

Client ASFI Location BRECKINRIDGE PROJECT

Project
Sheet 2 of 2
Date by

Area	Equip. No.	Service and Name	avg. failure rate/k-hrs	avg. maint. hr/failure	series no. (i)	paral. no(jk)	failure effec % cut back	cont. prob.	serv. hrs.	References/comments
		Σ Series	.19497	10.3569	hr/k-hr		53.13 hr/failure			
		Σ Parallel	.019625	0.3125	hr/k-hr		- 15.98 hr/fail.			
		Σ All	.21459	10.67	hr/k-hr		- 49.72 hr/fail			

TABLE A-9A

System Reliability Analysis of PLANT 7.4 REFRIGERATION - LIQUID AND GAS DRYERS - LPG SWEETENER

Project ____ Sheet 1 of 2 Date ____ by ____

Client A.S.F.T. Location BRECKINRIDGE PROJECT

Area	Equip. No.	Service and Name	avg. failure rate/k-hrs	avg. maint. hr/failure	series no. (i)	paral. no (jk)	failure effec %cut back	cont. prob%	serv. hrs.	References/comments
7	C-133	1ST STAGE WET DRUM	.0011	50	1			80	200k	
	C-134	1ST STAGE DRY DRUM								
	C-135	2ND STAGE WET DRUM	.0011	50	2			80	200k	
	C-136	2ND STAGE DRY DRUM								
	C-137	3RD STAGE WET DRUM	.0011	50	3			80	200k	
	C-138	3RD STAGE DRY DRUM								
	K-103	PROPANE COMPRESSOR 3 MACHINES II	.0093	100		11,12,13		80	24k	
	E-051	PROPANE CONDENSER	.01317	50	4			90	8k	
	C-040	REFRIGERANT SURGE DRUM	.0026	100	5			90	40k	
	C-039	ETHANE RECTIFIER								
	E-053	ETHANE REFLUX CONDENSER	.00439	50	6			90	24k	
	C-043	RECTIFIER REFRIGERANT DRUM	.0011	24	7			80	200k	
		= LIQUID AND GAS DRYERS =								
	C-166	COALESCER	.0011	24	8			80	200	Not critical
	C-164	LIQUID DRYERS A,B,C, III	.0026	100		21,22,23		90	40k	
	C-167	LIQUID DRYER FILTER								Not critical
	C-163	REGENERATION SEPARATOR	.0011	24	9			80	200k	
	E-162	REGENERATION GAS TRIM COOLER	.01317	50	10			90	8k	
	E-155	REGENERATION GAS COOLER	.01317	50	11			90	8k	
	C-181	REGENERATION BLOWER K.O. DRUM	.0011	24	12			80	200k	
	K-104	REGENERATION BLOWER	.0066	50	13			80	24k	
	E-157	REGENERATION STEAM HEATER	.00439	50	14			90	24k	
	E-167	REGENERATION ELECTRIC HEATER	.01317	24	15			90	8k	
	E-156	NITROGEN COOLER	.00439	50	16			90	24k	
	C-156	GAS DRYERS A,B,C, III	.0026	100		31,32,33		90	40k	
	C-158	GAS DRYER FILTER								Not CRITICAL
		= LPG SWEETENER = (12 TRAINS)								
	E-158	PRECOOLER	.00439	50	17			90	24k	Not CRITICAL
	E-159	CHILLER	.00439	50	18			90	24k	" "
	C-151	LPG SWEETENER SIEVE BED A,B,C II	.0026	100	19			90	40k	
	C-152	DUST FILTER								
	E-160	REGENERATION ELECTRIC HEATER	.01317	50	20			90	8k	
	E-161	REGENERATION HEATER	.00439	50	21			90	24k	
	E-154	REGENERATION COOLER	.01317	50	22			90	8k	
	E-164	REGENERATION GAS TRIM COOLER	.01317	50	23			90	8k	
	C-180	REGENERATION GAS K.O. DRUM	.0011	24	24			80	200k	
	K-107	REGENERATION GAS COMPRESSOR 1st STAGE								
	"	REGENERATION GAS COMPRESSOR 2nd STAGE	.0093	150	25			80	24k	
		Σ series	.08275	43.13	hr/k-hr		3.5692	hr/k-hr		
		Σ parallel	.000013	95.82	hr/k-hr		.0012	hr/k-hr		
		Σ All	.08274	43.154	hr/k-hr		35.7045	hr/k-hr		

TABLE A 9A

System Reliability Analysis of FLOW 7 PRODUCT SWEETENING UNIT

Client ASFI Location BRECKINRIDGE PROJECT

Project
Sheet 2 of 2
Date by

Area	Equip. No.	Service and Name	avg. failure rate/k-hrs	avg. maint. hr/failure	series no. (i)	paral. no(jk)	failure effec %cut back	cont. prob%	serv. hrs.	References/comments
7	C-151	GASOLINE CAUSTIC WASH COLUMN	.0026	100				90	40k	Not critical
	C-158	MEROX DISSOLUTION POT	.0011	8				80	200k	" "
	C-159	ACETIC ACID ADDITION POT	.0011	8				80	200k	" "
	H-101	ACETIC ACID EDUCTOR	.0056	8				80	40k	" "
	H-102	WATER HEATER	.0056	8				80	40k	
	D-113	METHANOL STORAGE TANK	.0011	8				80	200k	
	C-160A	GASOLINE MEROX REACTOR (SWEETENING)	.0026	100				90	40k	Not CRITICAL
	C-160B	" " " (REGENERATION)								" "
	C-161	GASOLINE CAUSTIC SETTLER	.0011	24				80	200k	" "
	C-162	GASOLINE SAND FILTER	.00439	24				90	24k	" "
	D-114	ANTIOXIDANT STORAGE TANK	.0011	8				80	200k	
	G-153	ANTIOXIDANT FEED PUMP	—	—						
	G-152	METHANOL ACETIC ACID PUMP								
	G-151	CAUSTIC PUMP								

TABLE A-10 No of LINES 1

System Reliability Analysis of PLANT 8 - CRYOGENIC HYDROGEN PURIFICATION.

Client AGFI Location BRECK INDUSTRY PROJECT

Project 7811
Sheet 1 of 1
Date _____ by L.R.

Area	Equip. No.	Service and Name	avg. failure rate/k-hrs	avg. maint. hr/failure	series no. (i)	paral. no (jk)	failure effec %cut back	cont. prob%	serv. hrs.	References/comments
8	SP-91	SEPARATOR	.0011	50	1			80	200K	
	D-18A	MOLECULAR SIEVE ADSORBER	.0093	24	2			80	24K	
	D-18B	" " "	.0093	24	2			80	24K	
	D-18C	" " "	.0093	24	2			80	"	
	S-2	NITROGEN VENT STACK								
	CP-1	REACTIVATION BLOWER	.0066	50	2			90	16K	
	HE-4	REACTIVATION COOLER	.01317	50	6			70	8K	
	HE-3	REACTIVATION HEATER	.0066	50	2			90	16K	
	F-16	FINAL FILTER AIR	.02634	8		2		90	4K	
	H-6	HEAT EXCHANGER	.0044	50	2			90	24K	
	SP-96	HEAVY HYDROCARBON SEPARATOR	.0011	50	1			80	[illegible]	
	SP-99	LIQUID SEPARATOR	.0011	50	1			80	[illegible]	
	HE-7	HEAT EXCHANGER	.0044	200	2			90	24K	
	HE-8	HEAT EXCHANGER	.0044	[illegible]	2			[illegible]	24K	
	HE-9	HEAT EXCHANGER	.0044	[illegible]	2			90	24K	
	SP-98	LIGHT HYDROGEN SEPARATOR	.0011	50	1			80	[illegible]	
	SP-97	INERT SEPARATOR	.0011	50	1			80	[illegible]	
	K-70	RECYCLE NITROGEN COMPRESSOR	.0044	100	16			90	8K	
	HE-701	N_2 COMPRESSOR INTERCOOLER	.01317	50	11			90	8K	
	HE-702	" " "	.01317	50	11			90	8K	
	HE-703	" " "	.01317	50	11			90	8K	
	HE-704	N_2 COMPRESSOR INTERCOOLER	.01317	50	11			90	8K	
	HE-705	" " "	.01317	50	11			90	8K	
	HE-706	N_2 COMPRESSOR AFTERCOOLER	.01317	50	11			90	8K	
	P-58	COMPRESSOR/EXPANDER	.0044	200	2			90	24K	
	HE-581	EXPANDER/COMPRESSOR AFTERCOOLER	.01317	50	11			90	[illegible]	
	S-707	SILENCER								
		(FREON UNIT)								
		EVAPORATOR	.0066	100	2			90	16K	
		FREON CONDENSER	.01317	100	2			90	[illegible]	
		" RECEIVER	.0011	[illegible]	1			80	200K	
		FILTER DRYER								
		FREON COMPRESSOR	.0044	[illegible]	2			90	24K	
		Σ Series	0.20363	13.72 hr/k-hr	—		67.36 hr/failure			
		Σ Parallel	0.02634	0.21012	"	—	8 "			
		Σ All	0.22997	13.927 hr/k-hr	—		60.56 hr/failure			

TABLE A-11

System Reliability Analysis of PLANT 10 (CLAUS SULFUR) No of LINES 3

Client ASFI Location BRECKINRIDGE PROJECT

Project 7811
Sheet 1 of 2
Date _____ by EA

Area	Equip. No.	Service and Name	avg. failure rate/k-hrs	avg. maint. hr/failure	series no. (i)	paral. no(ik)	failure effec %cut back	cont. prob%	serv. hrs.	References/comments
10										
	C-004	RECYCLE ACID GAS K.O. DRUM	.0011	24	1			80	200k	
	LC	LEVEL CONTROLLER								
	PC	PRESSURE CONTROLLER								
	G005	RECYCLE GAS K.O DRUM CONDENSATE PUMP	.0279	16		11,12		80	8k	
	C-003	SELEXOL ACID GAS K.O. DRUM	.0011	24	3			80	200k	
	LC	S. ACID GAS K.O. DRUM LEVEL CONTROLLER	-							
	PC	PRESSURE CONTROLLER	-							
	C-002	SWS ACID GAS K.O. DRUM	.0011	24	4			80	200k	
	G-005	SWS ACID GAS K.O. DRUM PUMP	.0279	16		21,22		80	8k	
	LC	S.W.S. ACID GAS K.O. LEVEL CONTRO	-							
	PC	PRESSURE CONTROL								
	C-001	DEA ACID GAS K.O. DRUM	.0011	24	5					
	G-002	DEA ACID GAS K.O. DRUM PUMP	.0279	16		31,32		80	8k	
	PC	PRESSURE CONTROL	-							
	E-105	FEED PREHEATER	.01317	50	6			90	8k	
	T-C	TEMPERATURE CONTROLLER	-							
	F-101	REACTION FURNACE	.0066	200	7			90	16k	
	E-101	WASTE HEAT BOILER	.01317	100	8			90	8k	
	LC	BOILER FEED WATER LEVEL CONTROLLER								
	K-101	CLAUS AIR BLOWER	.01317	50	9			90	8k	
	FC	FLOW CONTROLLER								
	E-106	AIR PREHEATER	.01317	50	10			90	8k	
	TC	AIR TEMPERATURE CONTROLLER								
	E-104	MIX GAS CONDENSER	.01317	50	11			90	8k	
	LC	BOILER FEED WATER LEVEL CONTROL								
	E-101	REHEAT EXCHANGER N°1	.01317	50	12			90	8k	
	TC	STEAM TEMPERATURE CONTROL								
	C-101	CONVERTER N°1	.0022	200	13			90	40k	
	E-102	REHEAT EXCHANGER N°2	.01317	50	14			90	8k	
	TC	ST. TEMPERATURE CONTROLLER	-							
	C-102	SULFUR CONVERTER BED N°2	.0022	200	15			90	40k	
	E-107	CONDENSER N°2	.01317	50	16			90	8k	
	LC	BFW LEVEL CONTROL	-							
	E-103	REHEAT EXCHANGER N°3	.01317	50	17			90	8k	
	TC	STEAM TEMPERATURE CONTROLLER	-							
	C-103	SULFUR CONVERTER N°3	.0022	200	18			90	40k	
	E-108	TAIL GAS SUPER HEATER	.01317	50	19			90	8k	
	TC	STEAM TEMP CONTROLLER	-							
	D-101	SEAL POT N°1	.0011	24	20			90	200k	
	D-102	SEAL POT N°2	.0011	24	21			90	200k	
	D-103	SEAL POT N°3	.0011	24	22			90	200k	
	D-104	SEAL POT N°4	.0011	24	23			90	200k	
	D-001	SULFUR PIT	.00011	100	24			80	200k	

System Reliability Analysis of PLANT 10 (CONT). No of Lines 3

Client ASFI Location BRECKINRIDGE PROJECT

Project 78/1
Sheet 2 of 2
Date _____ by EA

Area	Equip. No.	Service and Name		avg. failure rate/k-hrs	avg. maint. hr/failure	series no. (i)	paral. no(jk)	failure effec %cut back	cont. prob%	serv. hrs.	References/comments
			Σ series	0.15370	62.88 hr/failure			9.667 hr/k-hr.			
			Σ parallel	0.00841	16.0 "			0.13 "			
			Σ AU	0.16528	59.30 hr/failure			9.80 hr/k-hr.			

TABLE A-12

System Reliability Analysis of PLANT 12.1 (GASIFICATION) No of LINES 5

Client ASFI Location BRECKINRIDGE PROJECT

Project 78/1
Sheet 1 of 1
Date _____ by EA

Area	Equip. No.	Service and Name	avg. failure rate/k-hrs	avg. maint. hr/failure	series no. (i)	paral. no(jk)	failure effec %cut back	cont. prob%	serv. hrs.	References/comments
12	C-001	GASIFIER FEED TANK	.0279	100	1			80	8k	
	Y-002	FEED TANK MIXER	–							
	L-C	GASIFIER FEED TANK LIQUID LEVEL CONT.	–							
	G-025	FEED PUMP	.0279	24		11,12		80	8k	
	G-001	FEED PUMP (POSITIVE DISPLACEMENT)	.0558	150		11,12		80	4k	
	F-C	STEAM FLOW CONTROL VALVE								
	F-C	OXYGEN PRESSURE CONTROL								
	C-002	GASIFIER	.0558	500	2			80	4k	
	H-003	GASIFIER START UP BURNER								
	Y-003	QUENCH EFFLUENT SCREENS	–							
	E-043	BURNER TIP WATER AIR COOLER	.01317	48	3			90	8k	
	C-002	GASIFIER SLAG QUENCH VESSEL	.0140	100	4			80	16k	
	TC	GASIFIER TEMP. CONTROL (WELL)	–	–						
	LC	GASIFIER LIQUID CONTROLLER	–							
	T	GASIFIER SLAG TIMING CONTROLLER	–	–						
	D-001	QUENCH EFFLUENT WATER SUMP	–							
	G-026	QUENCH WATER PUMP	.01317	16		31,32		90	8k	
	D-002	BURNER TIP WATER TANK	.0011	16	5			80	200k	
	G-027	BURNER TIP WATER PUMP	.01317	16		41,42		80	8k	
	H-002	START VACUUM EDUCTOR	–							
	H-001	GASIFIER VAPOR VENTURI SCRUBBER	.0279	75	6			80	8k	
	C-003	SOOT SCRUBBER	.0279	75	7			80	8k	
	G-022	GASIFIER WATER PUMP	.0279	16		51,52		80	8k	
	F-C	VETURI SCRUBBER FLOW CONTROLLER	–							
	C-004	SLURRY SEPARATOR	.0112	100	8			80	20k	
	G-029	SLURRY PUMP	.02634	24		61,62		90	4k	
	E-044	SCRUBBER LIQUID AIR COOLER	.01317	50	9			90	8k	
	LC	SCRUBBER SEPARATOR LIQUID LEVEL CONT.	–	–						
	Y-004	SOOT SLURRY CLARIFIER	.00527	100	10			90	20k	
	G-006	SOOT + SLAG SLURRY PUMP	.01317	24		71,72		90	8k	
	L-C	LIQUID LEVEL CONTROLLER (SOOT-SLURRY CLARIF.)								
	D-003	CLARIFIER EFFLUENT HOLD TANK	.0011	16	11			80	200k	
	G-030	WASTE PUMP	.01317	48		81,82		90	8k	
	L-C	HOLD TANK LIQ. LEVEL CONTROLLER	–	–						
		SLAG LET DOWN SYSTEM	.1116	100		91,92		80	2k	
		Σ Series	0.19851	197.72	39	25	/k-hr.			
		Σ Parallel	0.0557	93.78	5	222	"			
		Σ All	0.25419	175	44	47	"			

TABLE A-13

System Reliability Analysis of PLANT 12.2 (SHIFT SECTION) No of LINES 3

Client ASFT Location BRECKINRIDGE PROJECT

Project 78/1
Sheet 1 of 1
Date _____ by EA

Area	Equip. No.	Service and Name	avg. failure rate/k-hrs	avg. maint. hr/failure	series no. (i)	paral. no (jk)	failure effec %cut back	cont. prob%	serv. hrs.	References/comments
12	F-001	START UP HEATER (1)								
	E-010	FIRST STAGE SHIFT FEED HEATER	.0066	50	1			90	16k	
	TC	FIRST STAGE TEMPERATURE CONTROLLER								
	C-011	FIRST STAGE SHIFT CONVERTER	.0044	500	2			90	24k	
	E-010	FIRST STAGE H.P. STEAM GENERATOR	.0066	150	3			90	16k	
	TC	TEMPERATURE HEATER CONTROLLER								
	C-040	FIRST STAGE H.P. STEAM DRUM	.00053	75	4			90	200K	
	E-011	FIRST STAGE BFW PREHEATER	.0066	50	5			90	8K	
	L-C	FIRST STAGE H.P.ST. DRUM LIQUID CONTR.								
	K-002	RECYCLE SHIFT GAS BLOWER	.0093	100	6			80	24K	
	C-012	2nd STAGE SHIFT CONVERTER	.0044	500	7			90	24K	
	T-C	2nd STAGE SHIFT CONV TEMPER. CONTROLLER								
	E-012	2nd STAGE STEAM GENERATOR	.0066	150	8			90	16K	
	F C	2nd STAGE ST. GEN. FLOW CONTROLLER								
	P-C	3rd STAGE PRESSURE CONTROLLER								
	C-013	3rd STAGE SHIFT CONVERTER	.0044	500	9			90	24K	
	E-028	GASIFIER QUENCH WATER PREHEAT	—	—				—	—	*NOT NEEDED
	E-013	3rd STAGE WAST HEAT BOILER A/B	.0066	50	10			90	16	
	P-C	3rd STAGE WASTE HEAT BOILER PRESS. CON.	—							
	E-015	DEAERATOR FEED PREHEATER	.0066	50	11			90	16K	
	C-015	HOT SHIFTED GAS K.O. DRUM	.0011	50	12			80	200K	
	LC	" " " " " " LEVEL CONTROLLER								
	E-029	GASIFIER QUENCH PREHEATER								*NOT NEEDED
	E-025	HOT SHIFTED GAS AIR COOLER A/B	.01317	50	13			90	8K	
	E-016	HOT SHIFTED GAS TRIM COOLER A/B	.01317	50	14			90	8K	
	C-036	COLD SHIFTED GAS K.O. DRUM	.0011	50	15					
	G-013	COLD SHIFTED GAS COND. PUMP A/B	.0279	16		11,12		80	8K	
	C-050	QUENCH WATER SURGE DRUM	.0011	50	16			80	200K	
	G-037	GASIFIER QUENCH WATER PUMP	.0279	16		21,22		80	8K	
	LC	COLD SHIFTED GAS K.O. DRUM LIQUID CONTROLLER								
		Σ Series	.09227	12.682 hr/k-hr		—	137.4 hr/failure			
		Σ Parallel	.00561	0.09 "		—	16 hr/failure			
		Σ All	.09788	12.772 "		—	130.49 hr/failure			

TABLE A-14

System Reliability Analysis of PLANT 12.3 (HYDROGEN PURIFICATION) No of LINES 3

Client ASFI Location BRECKINRIDGE PROJECT

Project 7811
Sheet 1 of 2
Date _____ by EA

Area	Equip. No.	Service and Name	avg. failure rate/k-hrs	avg. maint. hr/failure	series no. (i)	paral. no (jk)	failure effec %cut back	cont. prob%	serv. hrs.	References/comments
12	C-016	SHIFTED GAS H_2S ABSORBER	.0026	150	1			90	40K	
	LC	H_2S ABSORBER LEVEL CONTROLLER								
	PC	" " PRESSURE CONTROLLER								
	C-017	H_2S ABSORBER RICH SOLVENT FIRST FLASH DRUM	[illegible]	50	2			90	40K	
	LCHL	RICH SOLVENT FIRST FLASH DRUM LIQ LEVEL CONT								
	PC	RICH " " " " PRESS. CONTROLLER								
	GT037	H_2S ABSORBER LEAN SOLVENT PUMP TURBINE								
	G-037	" " LEAN SOLVENT PUMP A/B	.0211	24		11,12		80	8K	
	FL	" " " " " FLOW CONTR.								
	C-018	H_2S ABS. RICH SOLVENT 2nd FLASH DRUM	.0011	50	3			80	[illegible]	
	G-023	RICH SOLVENT TRANSFER PUMP A/B	.0211	16		21,22		80	8K	
	LCHL	H_2S ABS. 2nd FLASH DRUM LIQUID CONTROLLER								
	PC	" " " " PRESSURE CONTROLLER								
	FL	RICH SOLVENT FLOW CONTROLLER								
	C-025	FIRST STAGE K.O. DRUM	.0011	24	4			80	200K	
	G-011	FLASH GAS K.O. PUMP	.0279	16		31,32		80	8K	
	L-C	FIRST STAGE K.O. DRUM LIQUID LEVEL CONT								
	E-031	EXHAUST STEAM SURFACE CONDENSER INCL.								
		STEAM JET CONDENSER AND EXHAUST STEAM JET	.01317	48	5			90	8K	
	KT004	RECYCLE VAPOR COMPRESSOR TURBINE 1ST STAGE	.0093	120	6			80	24K	
	E-017	" " " " FIRST STAGE COOLER	.0093	50	7			80	24K	
	KT004	" " " " 2nd STAGE	.0093	120	8			80	24K	
	E-018	RECYCLE VAPOR 2nd STAGE COOLER	.0093	50	9			80	24K	
	FL	COMPRESSOR TURBINE FLOW CONTROLLER								
	PC	" " PRESS. CONTROLLER								
	C-019	SECOND STAGE FLASH GAS K.O.	.0011	50	10			80	200K	
	LC	2nd STAGE FLASH DRUM LIQUID LEVEL CONTR								
	PC	PRESSURE CONTROLLER								
	E-018	RECYCLE VAPOR 2nd STAGE COOLER A/B	.01317	50	11,12			90	8K	
	C-031	THIRD STAGE FLASH GAS K O DRUM	.0011	50	13			80	[illegible]	
	LCHL	" " " " LIQ. CONTROL HEIGHT LEVEL								
	E-019	RECYCLE VAPOR 3rd. STAGE COOLER A/B	.01317	50	14,15			90	8K	
	E-034	H_2S RICH GAS HEATER								
	E-021	LEAN SOLVENT COOLER A/B/C 3	0.01317	50		4		90	8K	
	C-014	PRESATURATOR DRUM	.0011	50	16			80	200K	
	D-043	SELEXOL SUMP								
	G-010	H_2S ABSORBER PRESATURATOR PUMP	.0211	1				80	8K	
	LIC	PRESATURATOR DRUM LIQUID LEVEL CONTR								
	G-031	SELEXOL SUMP PUMP								
	D-001	SELEXOL STORAGE TANK	.0011	24	17			80	[illegible]	
	G-001	SELEXOL TRANSFER PUMP								
	E-047	CO_2 ABSORBER FEED PRECOOLER	.01317	50	18			90	8K	
	E-052	CO_2 ABSORBER FEED CHILLER	.0066	[illegible]	19			90	16K	
	LIC	" " " " LIQUID LEV. CONT								
	C-021	SHIFTED GAS CO_2 ABSORBER	.0071	150	20			90	40K	
	LIC	ABSORBER LIQ. HEIGHT CONTROLLER								
	PC	" PRESSURE CONTROLLER								
	GT[illegible]	CO_2 ABSORBER LEAN SOLV. PUMP TURBINE	.0186	150	21			80	12K	

System Reliability Analysis of PLANT 12 (HYDROGEN PURIFICATION) CONT

Client ASFI Location BRIDGEWATER PLANT

Project 7811
Sheet 2 of 2
Date _____ by EA

Area	Equip. No.	Service and Name	avg. failure rate/k-hrs	avg. maint. hr/failure	series no. (i)	paral. no(jk)	failure effec %cut back	cont. prob%	serv. hrs.	References/comments
12	GHT-12	CO_2 ABSORBER LEAN SOLV. PUMP TURBINE								
	G-121	CO_2 ABS. " " SOLVENT PUMP	.0279	50		61, 62		80	8K	
	RHT-12	CO_2 ABSOR. LEAN SOLVENT PUMP TUR								
	C-020	ABS. OVERHEAD HYDROGEN FLASH DRUM	.0011	50				80	200K	
	LIC	H_2S ABSOR FLASH DRUM LIQUID CONT								
	E-053	CO_2 STRIPPER FEED CHILLER A/B "	.0066	50		[illegible]		90	16K	
	LIC	" " LIQUID LEVEL CONTROL								
	C-023	LOW PRESSURE FLASH DRUM A/B "	.0011-7	50		81, 82		80	200K	
	FLV	L.P. FLASH DRUM FLOW CONTROL "								
	C-025	SHIFTED GAS CO_2 STRIPPER A/B "	.0026	150		91, 92		90	40K	
	FLV	SHIFTED " FLOW CONTROL								
	E-054	SOLVENT EXCHANGER A/B (LINE)	.0066-2	50				90	16K	
	G-039	LEAN SOLVENT CROSS BLEED PUMP	.0279	16		[illegible]		80	8K	
	G-038	SOLVENT WATER PUMP CHARGE PUMP A/B	.0279	16		11, 12		80	8K	
	V -	INLET AIR FILTER								
	K-009	CO_2 STRIPPER AIR COMPRESSOR A/B	.0093	75		11, 12		80	24K	
	C-039	SOLVENT FILTER	—							
	E-035	LEAN-RICH SOLVENT EXCHANGER A/B	.0066	50		[illegible]		90	16K	
	E-035	" " " " C/D	.0066	50		[illegible]		90	16K	
	C -	L.P. CONDENSATE POT	.0011	50				80	200K	
	G -	L.P. " PUMP	.0279	16		[illegible]		80	8K	
	E-050	CO_2 STRIPPING AIR COOLER A/B (LINE)	—	—				—	—	NOT CRITICAL
	E-051	H_2S STRIPPER PREHEATER (A, B, C) "	.0066	50		161, 162, 163		90	16K	
	C-021	SHIFTED GAS H_2S STRIPPER	.0026	50				90	40K	
	E-033	H_2S STRIPPER REBOILER A/B "	.0066	75		171, 172		90	16K	
	E-032	H_2S " OVERHEAD AIR COOLER	.01317	50				90	8K	
	LIC	STRIPPER LIQ LEVEL CONTROL								
	G-019	H_2S STRIPPER REFLUX PUMP	.0279	50		181, 182		80	8K	
	C-026	H_2S STRIPPER O.V. K.O DRUM	.0011	50				80	200K	
	PIC	PRESSURE CONTROL K.O. DRUM								
		Σ Series	0.16849	56.45 hr/failure			– 9.57 hr/k-hr.			
		Σ Parallel	0.02615	.3288 hr/failure			– .860 hr/k-hr			
		Σ All	0.19564	5330 hr/failure			– 10.43 hr/k-hr.			

TABLE A 14A

System Reliability Analysis of PLANT 12.4 (H2 COMPRESSION) No of LINES 4

Client ASFI Location BRICKYARDRIDGE PROJECT

Project 7811
Sheet 1 of 1
Date _____ by EA

Area	Equip. No.	Service and Name	avg. failure rate/k-hrs	avg. maint. hr/failure	series no. (i)	paral. no(jk)	failure effec %cut back	cont. prob%	serv. hrs.	References/comments
	C-051	HYDROGEN COMPRESSION K.O. DRUM	.0011	50	1			80	200k	
	LIC	LIQ LEVEL CONTROL K.O. DRUM	W/C-051							
	K-013	HYDROGEN COMPRESSOR 1ST STAGE	.0139	150	2			80	16K	
	E-015	H2 COMPRESSOR INTERSTAGE COOLER	.01317	50	3			90	8K	
	K-014	HYDROGEN COMPRESSOR (2nd STAGE)	.0139	150	4			80	16K	
	E-040	H2 SPILL BACK COOLER	.01317	50	5			90	8K	
		Z series	0.05529	5.542 hr/k-hr	~ 100.3 hr	failure				

TABLE A-15

System Reliability Analysis of PLANT 17, DISTILLATE SEPARATION No of LINES

Client A OF [illegible] Location [illegible] PRODUCT.

Project [illegible]
Sheet 1 of 2
Date _____ by _____

Area	Equip. No.	Service and Name	avg. failure rate/k-hrs	avg. maint. hr/failure	series no. (i)	paral. no(jk)	failure effec %cut back	cont. prob%	serv. hrs.	References/comments
17.0	C-101	DESALTER PREFLASH DRUM	.0011	100	1			80	200K	
	LICA	PREFLASH DRUM LIQ. LEVEL CONTRO.								
	G-110	DESALTER PUMP (4) 2 FOR EACH DR. 1/A	.0279	16		11,12		80	8K	
	FRC	FLOW RECORD CONTROLLER								
	Y-101	DESALTER	.0011	50	2			90	200K	
	LICA	DESALTER LIQUID HEIGHT CONTROLLER						90	200K	
	E-117	DESALTER WASH/EFFLUENT EXCHANGER	—	—				—	—	
	C-102	FRACTIONATOR PREFLASH DRUM	.0011	100	3			80	200K	
	LICA	LIQUID [illegible] CONTROLLER								
	G-101	PREFLASH PUMP (4) 2 FOR EACH DRUM	.0279	16		21,22		80	8K	
	FRC	FLOW RECORD CONTROLLER								
	F-101	FRACTIONATOR FEED HEATER A/B	.0066	150	4			90	16K	
	E-101	MID-DISTILLATE PUMPAROUND/FRACTIO	.0066	50		31,32,33		90	16K	
	E-102	NAPH. FEED EXCHANGERS (6 UNITS)	.0066	50		41,42,43		90	16K	
	E-103	MID DISTILLATE PUMP AROUND TRIM COOLER A/B	.0066	50	5			90	16K	
	G-104	MID-DISTILLATE PUMP (2 FOR EACH SET)	.0279	16		61,62		80	8K	
	FRC	FLOW RECORD CONTROLLER								
	E-104	FLUSH OIL PUMPAROUND/FRACTIONATOR FEED EX.								
		CHANGERS A/B/C	.0066	150		71,72,73		90	16K	
	G-103	FLUSH OIL/FRACTIONATOR PUMP A/B	.0279	70		81,82		80	8K	
	TRC	TEMPERATURE RECORD CONTROLLER								
	FRC	FLUSH OIL PUMPAROUND FLOW RECORD LEVEL								
	E-105	FLUSH OIL PUMPAROUND TRIM COOLER A/B	.0066	50	6			90	16K	
		"								
	E-121	HEAVY DISTILLATE/FRACTIONATOR FEED EXCH	.0066	50		91,92,93		90	16K	
	E-122	" " " (6UNITS) " A/B/C	.0066	50		101,102,103		90	16K	
	G-102	HEAVY DIST PUMP AROUND A/B	.0279	16		111,112		80	8K	
	LICA	FRACTIONATOR LIQ. LEVEL CONTROLLER								
	C-103	FRACTIONATOR	.0026	150	7			90	40K	
	E-113	HEAVY DISTILLATE/150# STEAM GEN.)	—	—				—	—	not essential
	FRC	STEAM TO FRACT. FLOW REC CONTROLLER								
	E-114	HEAVY DISTILLATE/75# STEAM GEN.)	—	—				—	—	" "
	E-115	HEAVY DISTILLATE TRIM COOLER	.01317	50	8			90	8K	
	C-105	FLUSH OIL STRIPPER A	.0026	150	9			90	40K	
	G-109	FLUSH OIL PUMP A/B	.0279	70		121,122		80	8K	
	FRC	FLOW RECORD CONTROL								
	LICA	FLUSH OIL STRIPP. LIQUID LEVEL CONTR.								
	E-111	FLUSH OIL PRODUCT/75# STEAM GEN.)	—	—				—	—	NOT ESSENTIAL
	E-112	FLUSH OIL PRODUCT TRIM COOLER	.01317	50	10			90	8K	
	C-106	MID-DISTILLATE STRIPPER	.0026	150	11			90	40K	
	G-108	MID-DIST. STRIPPER BOTTOMS PUMP A/B	.0279	70		131,132		80	8K	
	LICA	" " " LIQUID LEVEL CONTROLLER								
	E-101	MID-DIST. PRODUCT/75# STEAM GEN.	—	—	—			—	—	" "
	E-110	MID-DIST PRODUCT TRIM COOLER	.01317	50	12			90	8K	
	G-105	HEAVY NAPHTHA PRODUCT PUMP A/B	.0279	70		141,142		80	8K	
	E-108	HEAVY " AROUND TRIM COOLER	.01317	50				90	8K	
	E-107	FRACTIONATOR O.H. CONDENSER	.01317	50	13			90	8K	

System Reliability Analysis of PLANT 17 - DISTILLATE SEPARATION. No. of LINES 2

Client ASFI Location BRECKINRIDGE PROJECT

Project 7 P/1
Sheet 2 of 2
Date _____ by EA

Area	Equip. No.	Service and Name	avg. failure rate/k-hrs	avg. maint. hr/failure	series no. (i)	paral. no(jk)	failure effect %cut back	cont. prob%	serv. hrs.	References/comments
17.0	E-108	FRACTIONATOR O.H. TRIM CONDENSER	.01317	50		151,152		90	8K	
	S-106	FRACTIONATOR O.H. RECEIVER	.0011	100	14			80	200K	
	G-106	LIGHT NAPHTHA PUMP A/B	.0279	16		161,162		80	8K	
	C-109	OVERHEAD COALESCER	.0011	100	15			60	200K	
	FLS	FLOW LEVEL CONTROLLER [illegible]								
	C-107	COMPRESSOR SUCTION DRUM A/B	.0011	100	16			80	200K	
	K-101	VENT GAS COMPRESSOR A/B	.0093	70	17			80	24K	
	E-110	COMPRESSOR AFTER COOLER	.01317	50	18			90	8K	
	C-108	COMPRESSOR AFTER COOLER SEPARAT	.0011	50	19			80	200K	
	G-111	AFTER COOLER SEPARATOR PUMP	.0279	16		171,172		80	8K	
		Σ series	0.12362	65.38 hr/	8.082 hr/k-hr					
		Σ parallel	0.0287	37.90 hr/failure	+	1.088 hr/k-hr.				
		Σ all	0.15232	60.80 hr/failure	—	9.17 hr/k-hr.				

APPENDIX B

Figures 3 through 30

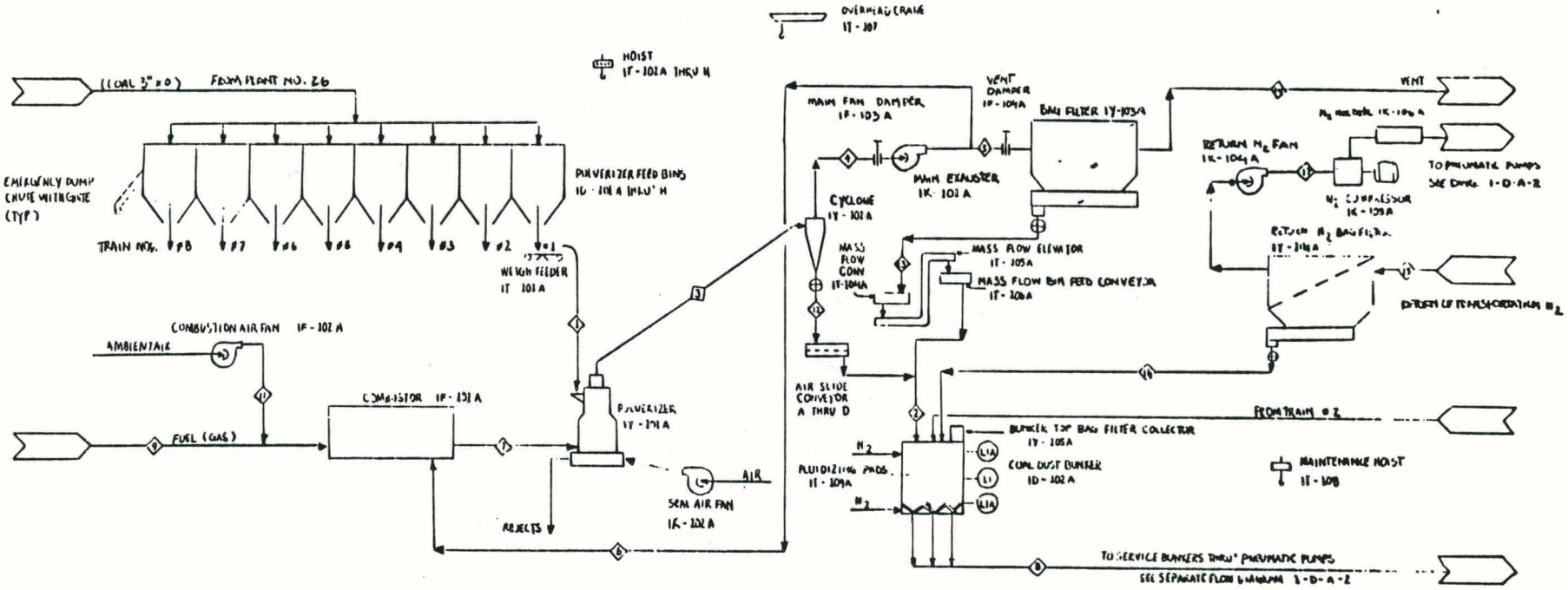

QUANTITIES ARE TOTAL FOR ALL PULVERIZER TRAINS

STREAM NO. / NAME		1 RAW COAL	2 PULVERIZED COAL	3 PULVERIZER OUTLET	4 CYCLONE OVERFLOW	5 BAG FILTER INLET	6 RECYCLE GASES	7 PULVERIZER INLET GASES	8 DUST TO SERVICE BUNKER	9 FUEL GASES	10 NOT USED	11 COMBUSTION AIR	12 CYCLONE SOLIDS	13 DUST FROM BAGHOUSE	14 VENT	15 RETURN NITROGEN	16 DUST FROM RETURN N_2	17 RECYCLE N_2
SOLID PHASE																		
COAL (DRY)	LB / HR	1,375,013	1,375,000	1,482,493	118,612	11,132	107,480	107,480	1,380,357	—	—	—	1,363,881	11,119	13	5,363	5,357	6
MOISTURE	LB / HR	205,462	28,061	30,255	2,421	227	2,194	2,194	28,170	—	—	—	27,834	227	<1	109	109	<1
TOTAL	LB / HR	1,580,475	1,403,061	1,512,748	121,033	11,359	109,674	109,674	1,408,527	—	—	—	1,391,715	11,346	13	5,472	5,466	6
% MOISTURE	W / W	13	2	2	2	2	2	2	2	—	—	—	2	2	2	2	2	<2
GAS PHASE																		
H_2O	LB / HR	—	—	2,152,822	2,152,822	201,788	1,951,034	1,975,421	—	neglect	—	neglect	—	—	201,788	—	—	—
DRY GAS	LB / HR	—	—	2,750,026	2,750,026	257,765	2,492,261	2,750,026	—	45,489	—	236,663	—	—	257,765	110,672	—	110,672
TOTAL	LB / HR	—	—	4,902,848	4,902,848	459,553	4,443,295	4,725,447	—	45,489	—	236,663	—	—	459,553	110,672	—	110,672
VOLUME	ACFM	—	—	1,733,505	1,733,505	162,485	1,571,021	2,778,018	—	17,882	—	50,905	—	—	162,485	24,923	—	24,923
TEMP.	°F	—	—	225	225	225	225	410	—	50	—	50	225	225	225	100	—	100
DUST LOADING	GR / SCF														.03	25	—	.03

OUT OF THIS 5,466 LBS/HR RETURN WITH CONVEYING N_2 SEE 16

⊕ AIRLOCK

BECHTEL
SAN FRANCISCO

BRECKINRIDGE PROJECT

FLOW DIAGRAM
PULVERIZATION AND DRYING
(PLANT NO. 1)
SHEET 1

14221 | 1-D-A-1 | 1

Figure 3
Sheet 1 of 2

B1

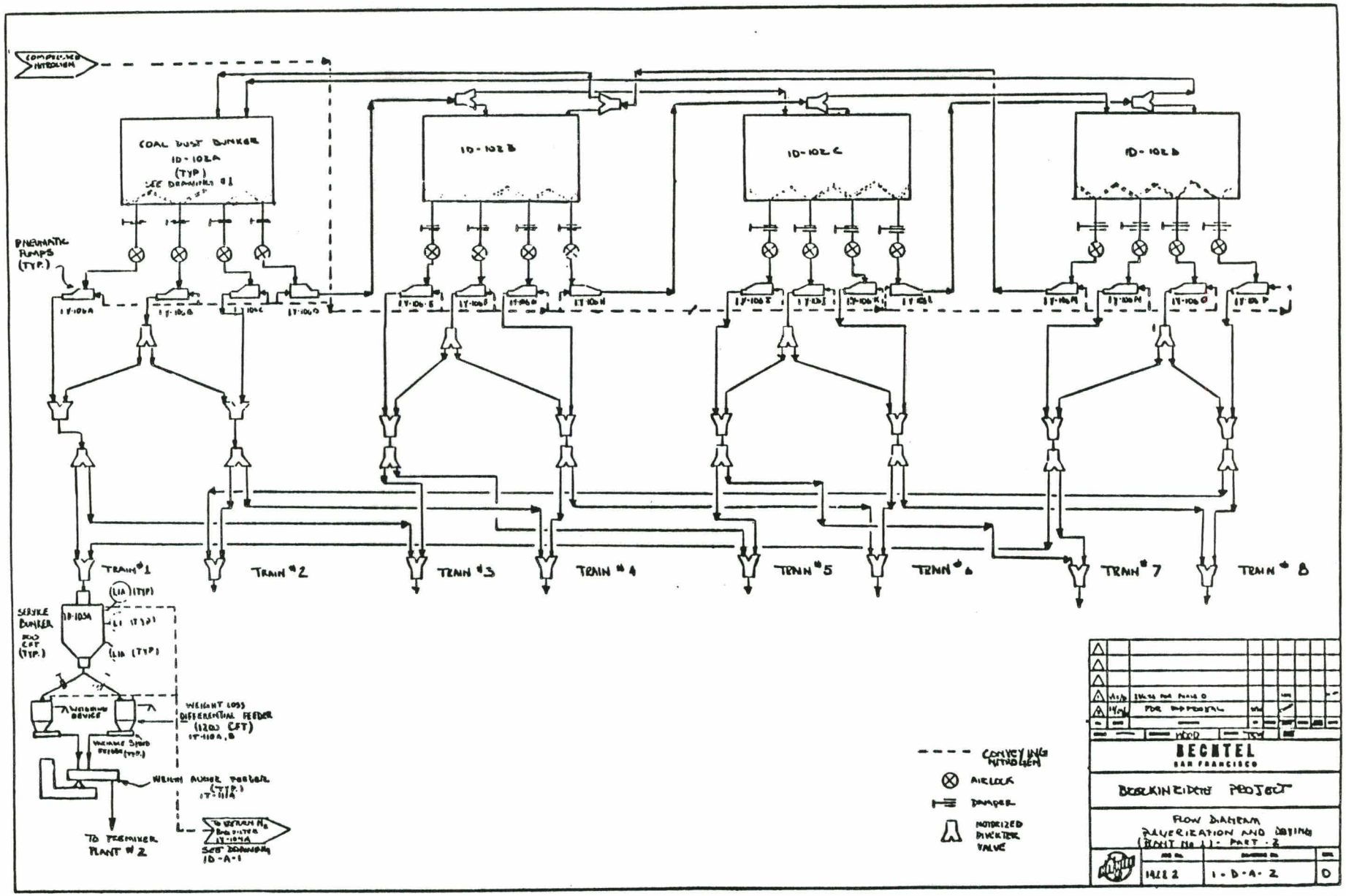

Figure 3
Sheet 2 of 2

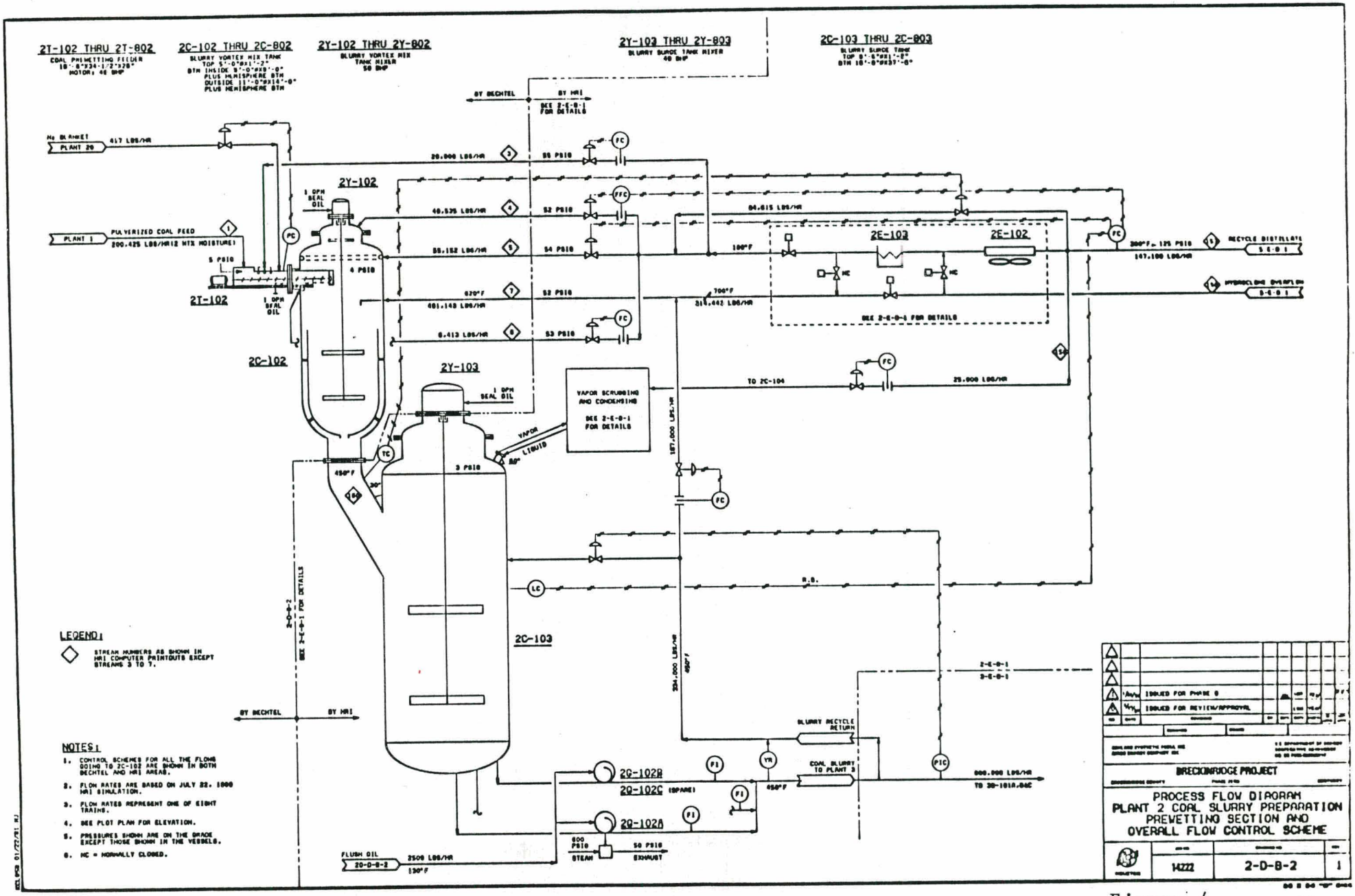
2T-102 THRU 2T-802
COAL PREWETTING FEEDER
2C-102 THRU 2C-802
SLURRY VORTEX MIX TANK
2Y-102 THRU 2Y-802
SLURRY VORTEX MIX TANK MIXER
2Y-103 THRU 2Y-803
SLURRY SURGE TANK MIXER
2C-103 THRU 2C-803
SLURRY SURGE TANK
BY BECHTEL
BY HRI
SEE 2-E-B-1 FOR DETAILS
N2 BLANKET
PLANT 20
417 LBS/HR
PLANT 1
PULVERIZED COAL FEED
200,425 LBS/HR(2 WTX MOISTURE)
2Y-102
2T-102
2C-102
2Y-103
2C-103
2E-103
2E-102
VAPOR SCRUBBING AND CONDENSING
SEE 2-E-B-1 FOR DETAILS
TO 2C-104
25,000 LBS/HR
RECYCLE DISTILLATE
HYDROCLONE OVERFLOW
SLURRY RECYCLE RETURN
COAL SLURRY TO PLANT 3
TO 3B-101A,B&C
2C-102A
2C-102C (SPARE)
2C-102A
FLUSH OIL
2D-D-B-2
2500 LBS/HR
130°F
STEAM
EXHAUST
LEGEND:
STREAM NUMBERS AS SHOWN IN HRI COMPUTER PRINTOUTS EXCEPT STREAMS 3 TO 7.
NOTES:
1. CONTROL SCHEMES FOR ALL THE FLOWS GOING TO 2C-102 ARE SHOWN IN BOTH BECHTEL AND HRI AREAS.
2. FLOW RATES ARE BASED ON JULY 22, 1980 HRI SIMULATION.
3. FLOW RATES REPRESENT ONE OF EIGHT TRAINS.
4. SEE PLOT PLAN FOR ELEVATION.
5. PRESSURES SHOWN ARE ON THE GRADE EXCEPT THOSE SHOWN IN THE VESSELS.
6. HC = NORMALLY CLOSED.
ISSUED FOR PHASE B
ISSUED FOR REVIEW/APPROVAL
BRECKINRIDGE PROJECT
PROCESS FLOW DIAGRAM
PLANT 2 COAL SLURRY PREPARATION
PREWETTING SECTION AND
OVERALL FLOW CONTROL SCHEME
14222
2-D-B-2
1

Figure 4

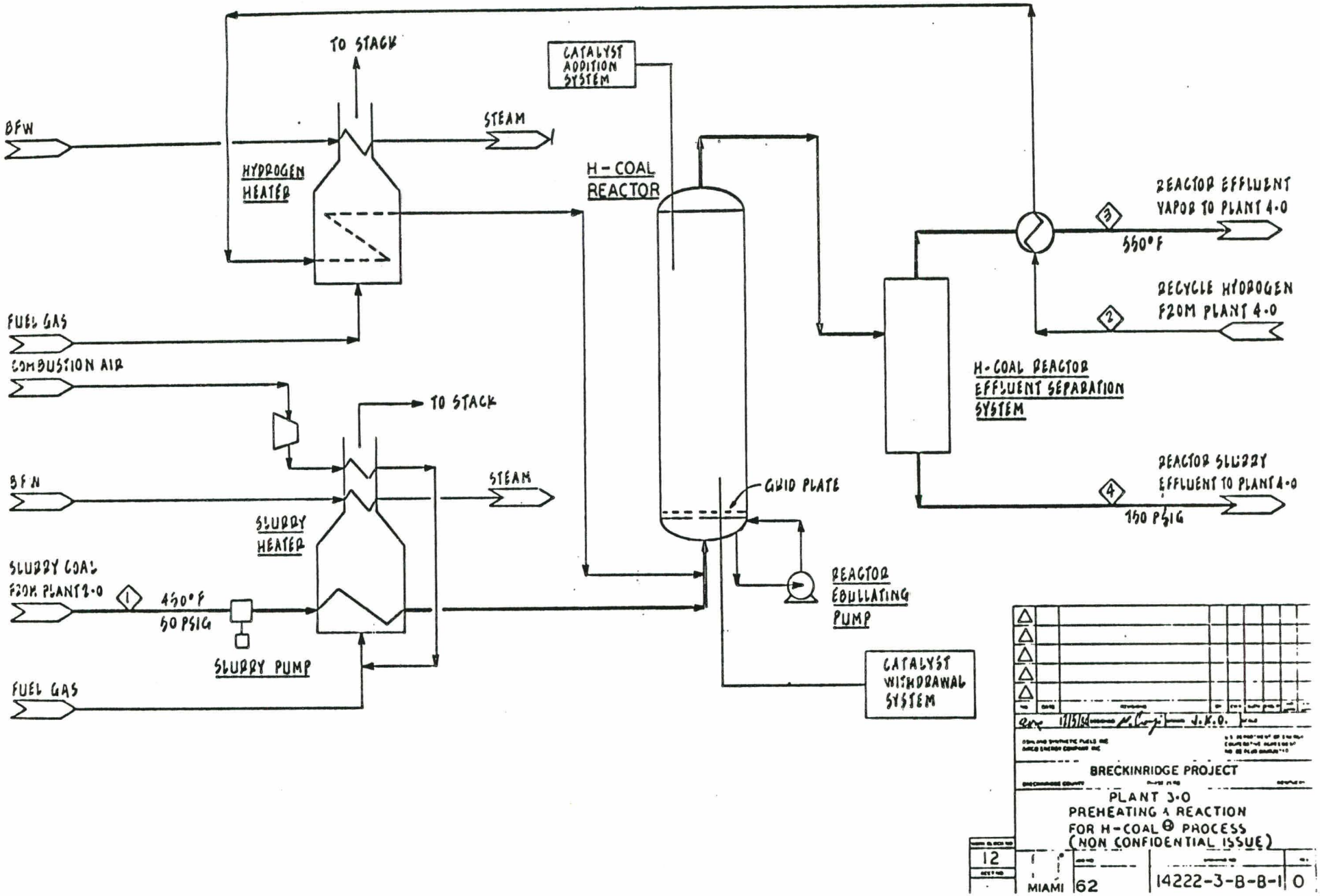

Figure 5
Sheet 1 of 2

Figure 5, Sheet 2 of 2, contains proprietary information, and is available for review at Bechtel's Houston offices.

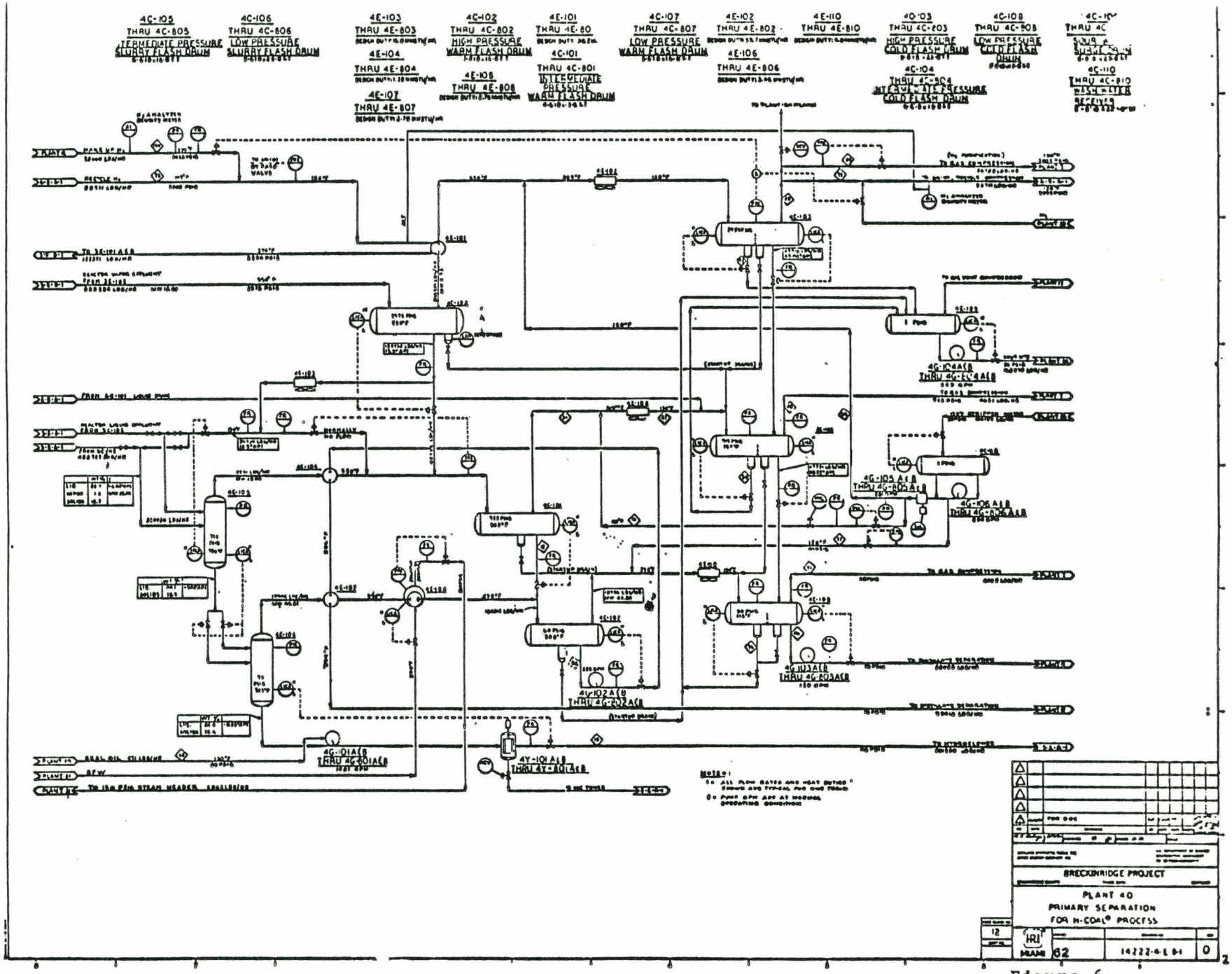
4C-105
THRU 4C-805
TERMEDIATE PRESSURE
SLURRY FLASH DRUM
4C-106
THRU 4C-806
LOW PRESSURE
SLURRY FLASH DRUM
4E-103
THRU 4E-803
4E-104
THRU 4E-804
4E-107
THRU 4E-807
4C-102
THRU 4C-802
HIGH PRESSURE
WARM FLASH DRUM
4E-105
THRU 4E-805
4E-101
THRU 4E-80
4C-101
THRU 4C-801
INTERMEDIATE
PRESSURE
WARM FLASH DRUM
4C-107
THRU 4C-807
LOW PRESSURE
WARM FLASH DRUM
4E-102
THRU 4E-802
4E-106
THRU 4E-806
4E-110
THRU 4E-810
4C-103
THRU 4C-203
HIGH PRESSURE
COLD FLASH DRUM
4C-104
THRU 4C-204
INTERMEDIATE PRESSURE
COLD FLASH DRUM
4C-108
THRU 4C-208
LOW PRESSURE
COLD FLASH
DRUM
4C-110
THRU 4C-810
WASH WATER
RECEIVER
4G-101A(B)
THRU 4G-501A(B)
4G-102A(B)
THRU 4G-502A(B)
4G-103A(B)
THRU 4G-503A(B)
4G-104A(B)
THRU 4G-504A(B)
4G-105A(B)
THRU 4G-505A(B)
4G-106A(B)
THRU 4G-506A(B)
4Y-101A(B)
THRU 4Y-501A(B)
NOTES:
1. ALL FLOW RATES AND HEAT DUTIES SHOWN ARE TYPICAL FOR ONE TRAIN
2. PUMP GPM ARE AT NORMAL OPERATING CONDITION
BRECKENRIDGE PROJECT
PLANT 40
PRIMARY SEPARATION
FOR H-COAL® PROCESS
HRI
MIAMI 62
14222-4-E-B-1
0

Figure 6

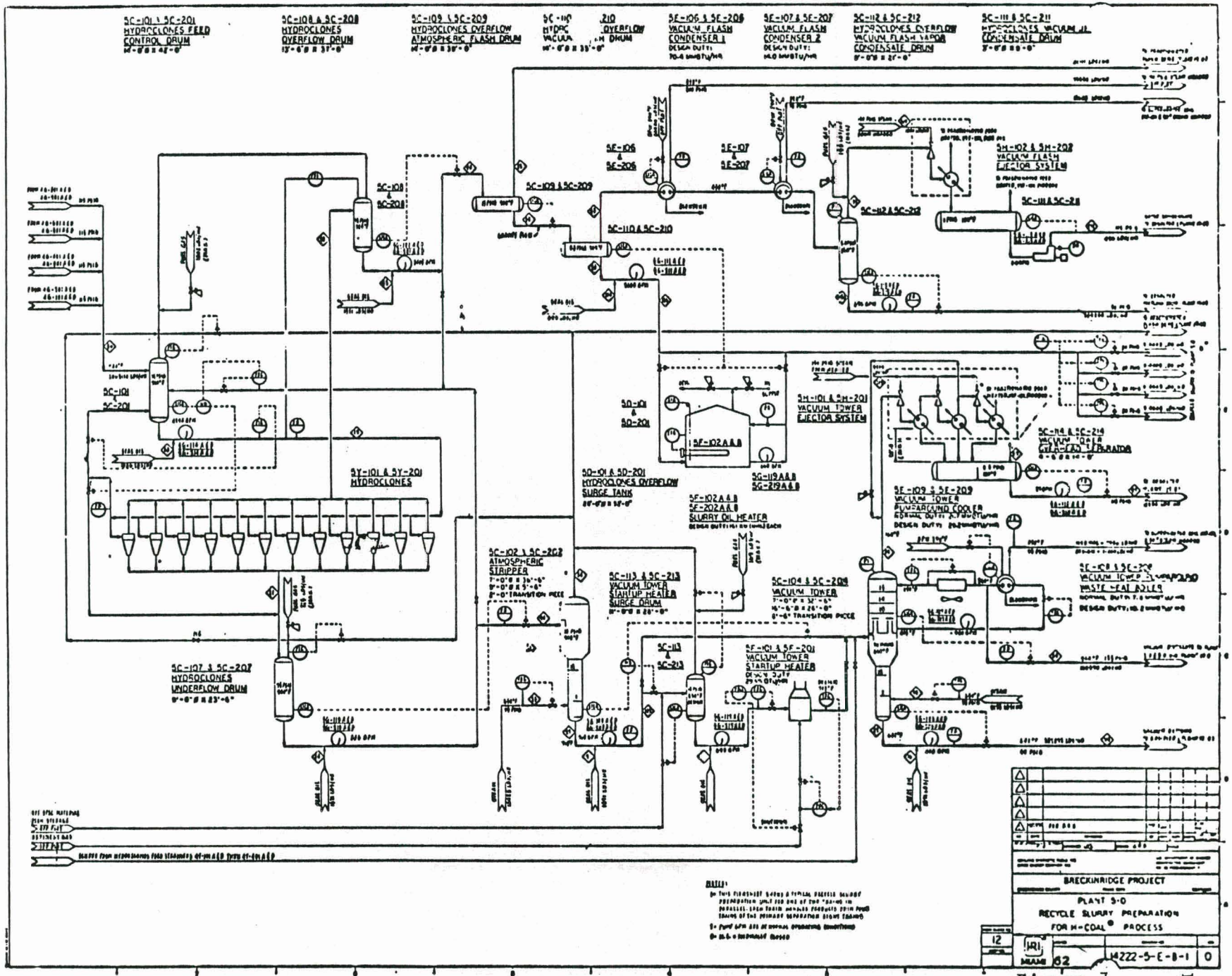
SC-101 & SC-201
HYDROCLONES FEED
CONTROL DRUM
SC-108 & SC-208
HYDROCLONES
OVERFLOW DRUM
SC-109 & SC-209
HYDROCLONES OVERFLOW
ATMOSPHERIC FLASH DRUM
SE-106 & SE-206
VACUUM FLASH
CONDENSER 1
SE-107 & SE-207
VACUUM FLASH
CONDENSER 2
SC-112 & SC-212
HYDROCLONES OVERFLOW
VACUUM FLASH VAPOR
CONDENSATE DRUM
SC-111 & SC-211
HYDROCLONES VACUUM
CONDENSATE DRUM
SH-102 & SH-202
VACUUM FLASH
EJECTOR SYSTEM
SC-111 & SC-211
SC-108
&
SC-208
SC-109 & SC-209
SC-110 & SC-210
SE-106
&
SE-206
SE-107
&
SE-207
SC-112 & SC-212
SC-101
SC-201
SD-101
&
SD-201
SH-101 & SH-201
VACUUM TOWER
EJECTOR SYSTEM
SC-114 & SC-214
VACUUM TOWER
SY-101 & SY-201
HYDROCLONES
SD-101 & SD-201
HYDROCLONES OVERFLOW
SURGE TANKS
SF-102 A & B
SG-119 A & B
SG-219 A & B
SF-102 A & B
SF-202 A & B
SLURRY OIL HEATER
SE-109 & SE-209
VACUUM TOWER
SC-102 & SC-202
ATMOSPHERIC
STRIPPER
SC-113 & SC-213
VACUUM TOWER
STARTUP HEATER
SURGE DRUM
SC-104 & SC-204
VACUUM TOWER
SC-108 & SC-208
VACUUM TOWER
WASTE HEAT BOILER
SC-107 & SC-207
HYDROCLONES
UNDERFLOW DRUM
SC-113
&
SC-213
SF-101 & SF-201
VACUUM TOWER
STARTUP HEATER
BRECKINRIDGE PROJECT
PLANT S-0
RECYCLE SLURRY PREPARATION
FOR H-COAL® PROCESS
12
HRI
MEANS 62
14222-5-E-B-1
0

Figure 7

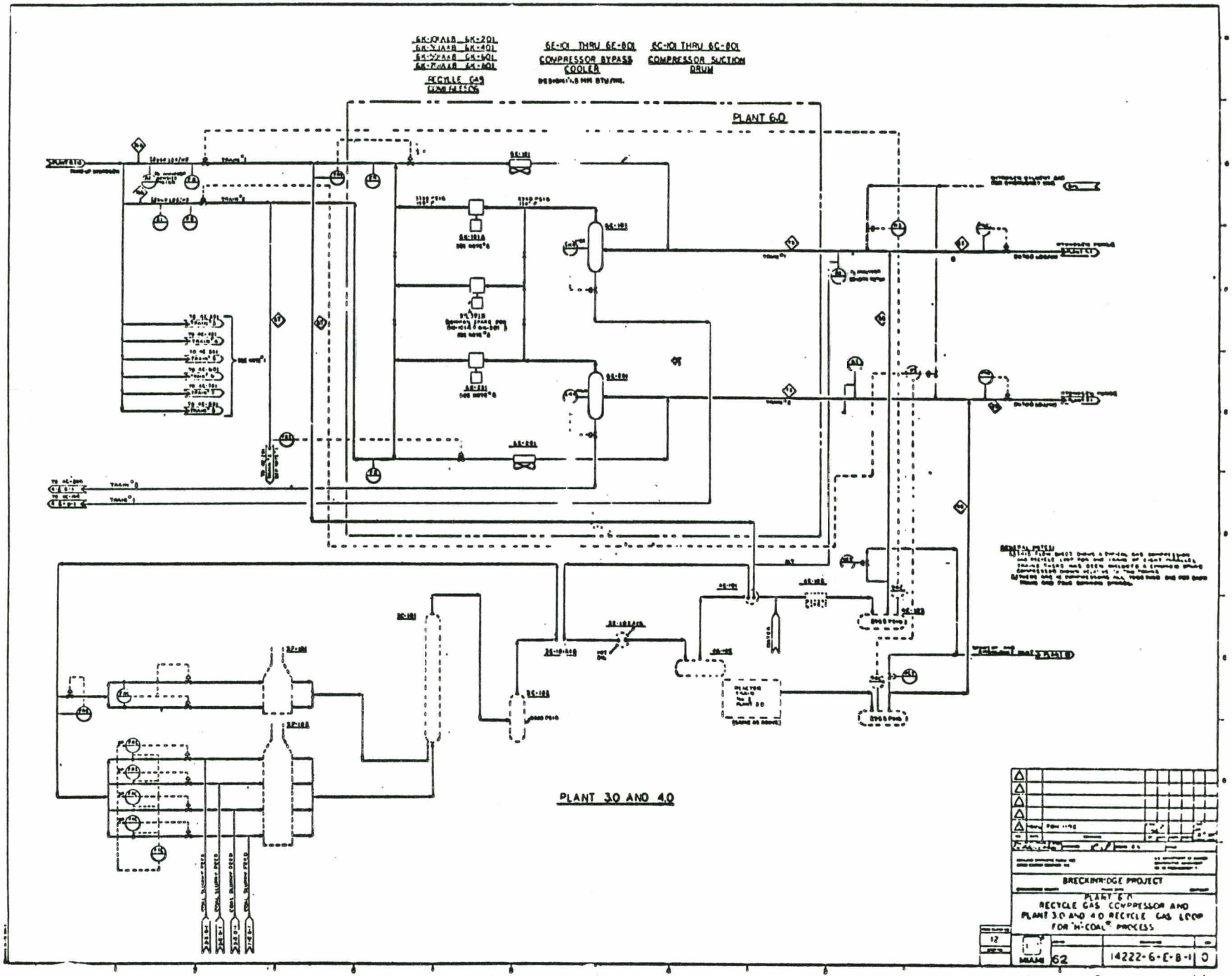
RECYCLE GAS COMPRESSOR
COMPRESSOR BYPASS COOLER
COMPRESSOR SUCTION DRUM
PLANT 6.0
PLANT 3.0 AND 4.0
BRECKINRIDGE PROJECT
RECYCLE GAS COMPRESSOR AND
PLANT 3.0 AND 4.0 RECYCLE GAS LOOP
FOR "H-COAL" PROCESS
14222-6-E-B-1
0

Figure 8

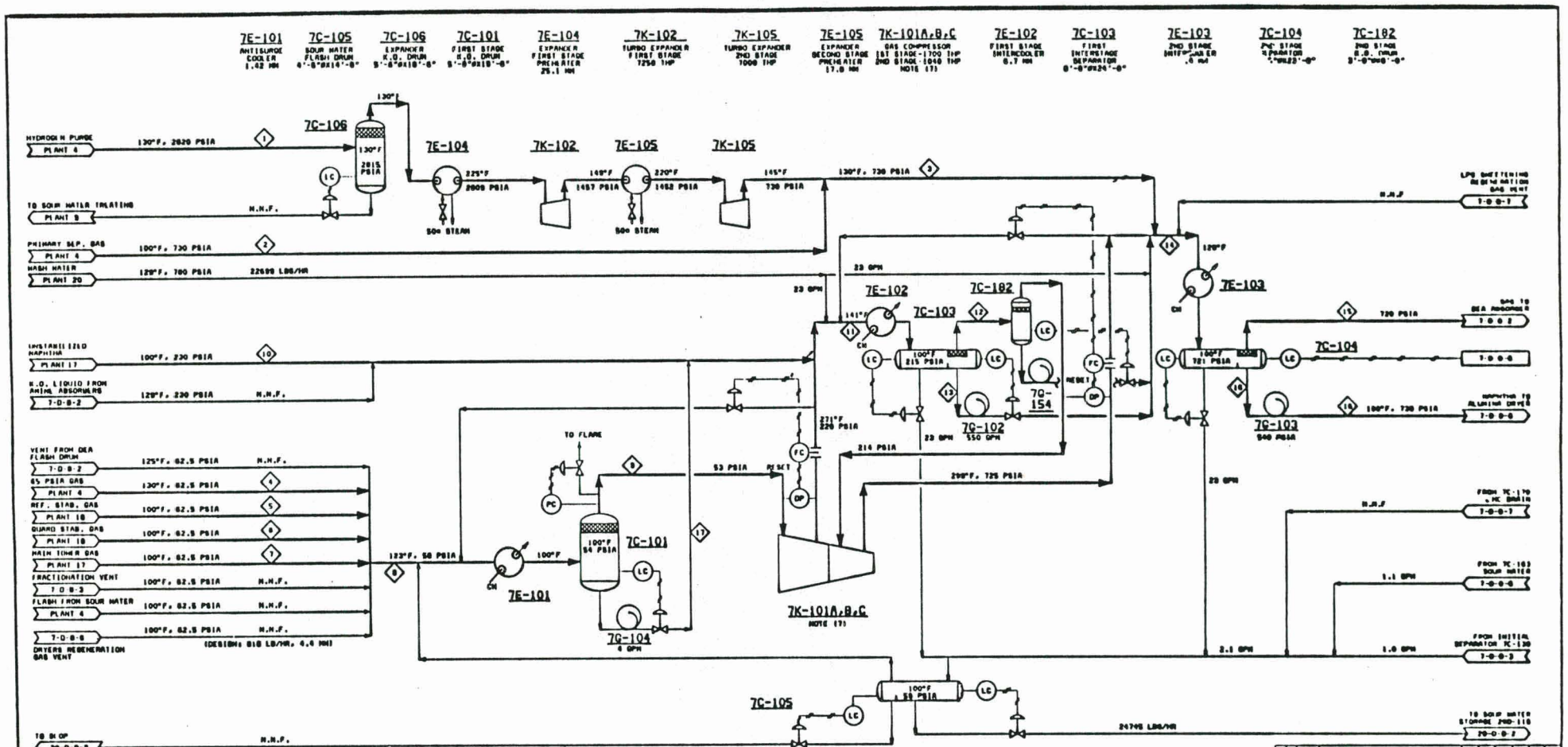

STREAM NO.	1 HYDROGEN PURGE	2 725 PSIA GAS	3 GASES FROM PRIMARY SEPARATION	4 65 PSIA GAS	5 REFORMER STABILIZER GAS	6 QUARDCASE STABILIZER GAS	7 MAIN TOWER GAS	8 COMBINED FEED TO ANTISURGE COOLER	9 FIRST STAGE FEED	10 UNSTAB. NAPHTHA	11 VAP-LIQ TO 1ST STAGE INTERCOOLER	12 SECOND STAGE FEED	13 FIRST STAGE CONDENSATE	14 VAP-LIQ TO 2ND STAGE INTERCOOLER	15 GAS TO DEA	16 SECOND STAGE CONDENSATE	17 FIRST STAGE K.O. DRUM CONDENSATE
BPSD (MMSCFD)	(261.3)	(25.4)	(292.7)	(13.7)	(0.3)	1.4	1.7	117.1	116.72	14.713		111.2	19.394		(304.1)	18.160	80
API (MM)	18.3	112.8	19.1	126.2	(42.8)	(31.3)	141.3	126.8	126.29	48.5	58.1 (21)	118.2	80.4	52.2 (14)	18.5	81.2	58.5
LBS/HR TOTAL	256,123	25,820	281,951	29,504	1,349	4,818	7,684	53,455	51996	197,612	243,055	22,367	187,857	524,873	317,095	184,409	1456
COMPONENT, MPH																	
H2O	48.5	11.8	80.3	55.8	0.0	0.0	8.7	64.6	31.7	2.0	1,294.8	5.4	3.0	1,328.7	42.3	3.0	32.8
H2	21,258.8	1,054.3	22,016.1	485.5	4.8	48.0	22.3	570.6	570.6	0.1	570.7	560.8	9.7	22,586.7	23,538.7	48.8	0
INERTS (NOTE 5)	2,093.8	281.9	2,375.5	108.1	0.0	0.0	5.8	114.7	114.7	0.1	114.8	111.8	3.0	2,490.2	2,487.3	7.8	0
CO2	15.0	3.2	18.2	5.4	0.0	0.0	1.1	6.5	6.5	0.3	6.8	5.8	1.2	25.1	24.5	0.6	0
H2S	134.1	28.8	184.0	51.7	0.0	0.0	13.2	84.8	84.8	8.0	72.8	30.5	23.3	236.8	216.7	20.2	0.8
NH3	0.8	0.4	1.3	0.0	0.0	0.0	1.4	1.4	1.4	1.1	2.5	0.8	1.6	3.7	0	0.0	0
C1	3,401.0	410.3	3,811.3	170.4	0.5	5.7	10.4	196.0	196.0	0.8	196.8	178.2	17.4	4,007.8	3,963.0	44.8	0
C2'S	1,237.8	196.1	1,495.7	178.5	4.0	30.8	22.8	237.2	237.1	5.0	242.3	157.3	85.0	1,677.8	1,583.8	84.2	0.1
C3'S	800.8	127.5	818.3	191.4	5.8	33.8	35.0	268.8	268.5	25.8	295.3	105.4	190.1	1,111.8	935.4	176.5	0.4
C4'S	258.8	53.8	323.5	136.0	8.3	36.7	34.4	218.4	217.4	83.3	301.7	46.6	255.3	625.2	403.0	222.2	1.0
C5'S - 400 F	136.0	25.4	181.4	89.5	3.5	2.5	31.1	136.6	129.4	1,634.8	1,771.5	18.2	1,752.3	1,832.8	187.3	1,735.6	0.2
400 F+	0.4	0.0	0.4	0.2	0.0	0.0	0.0	0.2	0	6.3	6.4	0.0	6.4	6.0	0.0	6.0	0.2
TOTAL MPH	29,395.8	2,798.4	32,184.8	1,505.8	31.7	157.7	198.0	1,881.0	1,836.2	1,767.3	4,068.6	1,231.8	2,358.3	31,033.7	33,395.8	2,361.3	42.0

NOTES:

1. MM = 1,000,000 BTU/HR
2. MMSCFD AT 60°F AND 14.7 PSIA
3. PUMP GPM ARE AT FLOW CONDITIONS
4. NC = NORMALLY CLOSED
5. INERTS = N_2 + CO
6. N.H.F. = NORMALLY NO FLOW
7. COMPRESSOR CONSISTS OF THREE MACHINES CONNECTED IN PARALLEL. EACH WITH 33% CAPACITY. THEORETICAL HORSEPOWER SHOWN IS FOR 100% CAPACITY.

NO.	DATE	REVISIONS	BY	CHK	APP	DATE
1	12/4/81	ISSUED FOR PHASE 6				
2	12/4/81	ISSUED FOR REVIEW/APPROVAL				

BRECKINRIDGE PROJECT

7.1 PROCESS FLOW DIAGRAM PLANT 7 GAS PLANT GAS COMPRESSION

14222 | 7-D-B-1 | 1

Figure 9

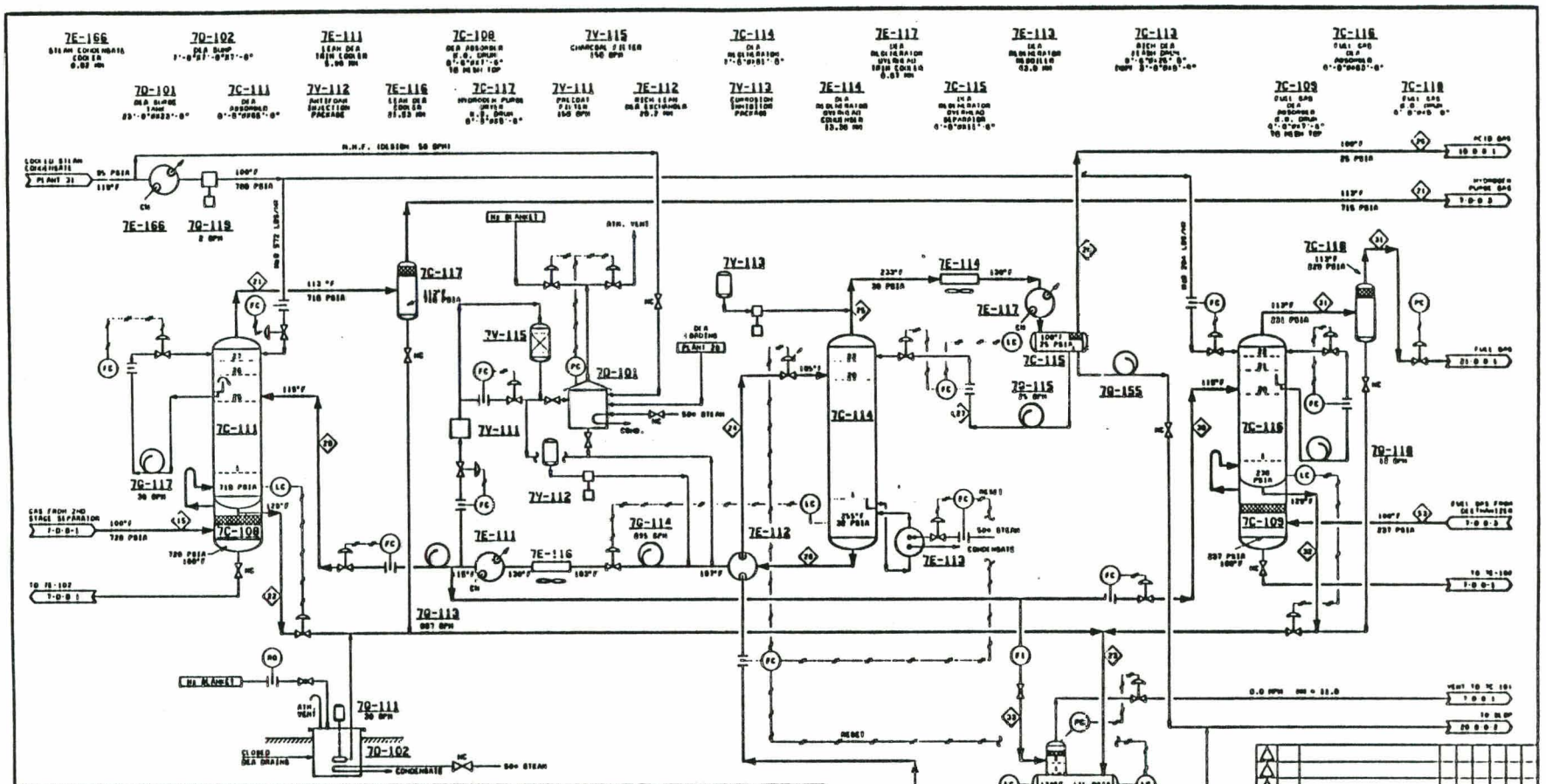

STREAM NO. / DESCRIPTION / COMPONENT	19 SOUR GAS TO DEA ABSORBER	21 SWEET GAS FROM DEA ABSORBER	22 RICH DEA FROM DEA ABSORBER	23 TOTAL RICH DEA SOLUTION	24 FLASHED TOTAL RICH DEA SOLUTION	25 TOP VAPOR FROM DEA REGENERATOR	26 ACID GAS TO SULFUR PLANT	27 DEA RE-GENERATOR REFLUX	28 TOTAL LEAN DEA FROM RE-GENERATOR	29 LEAN DEA TO DEA ABSORBER	30 LEAN DEA TO FUEL GAS DEA ABSORBER	31 SWEET FUEL GAS	32 RICH DEA FROM FUEL GAS DEA ABSORBER	33 LEAN DEA TO FLASH DRUM	34 SOUR FUEL GAS TO FUEL GAS DEA ABSORBER
DP60 (MMSCFD)	1306.11	1301.31	22.074	24.057	24.057	10.801	12.481	959	24.457	22.513	1.575	123.21	1.583	005	123.41
SG. 60°F (MM)	10.491	10.311	1.03	1.03	1.03	127.391	130.331	.00	1.03	1.03	1.03	126.021	1.03	1.03	126.091
LBS/HR TOTAL	317.005	309.050	340.065	370.157	370.223	81.750	8.181	12.525	367.030	330.040	22.000	81.579	22.487	0062	81.010
COMPONENT, MPH															
H_2O	12.3	05.4	15005.8	15010.5	15302.9	700.1	10.3	007.8	15292.6	15005.3	253.8	15.1	254.6	253.6	10.
N_2	2353.1	2353.1	5.8	7.1	1.8	1.0	1.0	10.	10.	10.	10.	104.2	1.0	10.	104.2
INERTS (NOTE 8)	2402.2	2401.7	0.0	0.0	0.2	0.2	0.2	10.	10.	10.	10.	75.0	0.2	10.	75.5
CO (PPM)	70.5	-	20.5	25.1	25.1	25.1	25.1	10.	10.	10.	10.	-	0.0	10.	0.0
H_2S (PPM)	210.7	1 24 1	210.7	237.5	232.4	232.4	230.0	10.	10.	10.	10.	1 50 1	10.0	10.	10.0
HCN	-		-	-	-	-	-	-	-	-	-	-	-	-	-
SO_2	2943.0	2941.0	1.1	1.5	0.4	0.4	0.4	10.	10.	10.	10.	734.0	0.4	10.	734.0
CS_2	1503.0	1503.1	0.2	0.0	0.2	0.2	0.2	10.	10.	10.	10.	1504.3	0.2	10.	1504.3
COS	835.0	835.0	0.2	0.2	0.1	0.1	0.1	10.	10.	10.	10.	83.0	0.1	10.	83.0
C_2H_6	403.0	407.0	0.1	0.1	0.1	0.1	0.1	10.	10.	10.	10.	-	10.	10.	0.0
C_3 & - 400°F	107.0	102.0	0.0	0.0	0.1	0.1	0.1	10.	10.	10.	10.	-	10.	10.	0.0
DEA	-	-	002.0	050.3	077.0	-	-	10.	072.0	003.0	04.0	-	14.1	14.0	-
TOTAL MPH	22305.0	22153.0	15152.2	16100.4	16430.5	871.0	870.1	007.8	15165.4	14000.1	1000.0	2564.0	1020.0	267.0	2565.0

NOTES:

A. MM = 1,000,000 BTU/HR
B. INDICED AT 60°F AND 14.7 PSIA
C. PUMP GPM ARE AT FLOW CONDITIONS
D. NC = NORMALLY CLOSED
E. INERTS = N_2 + CO

Figure 10

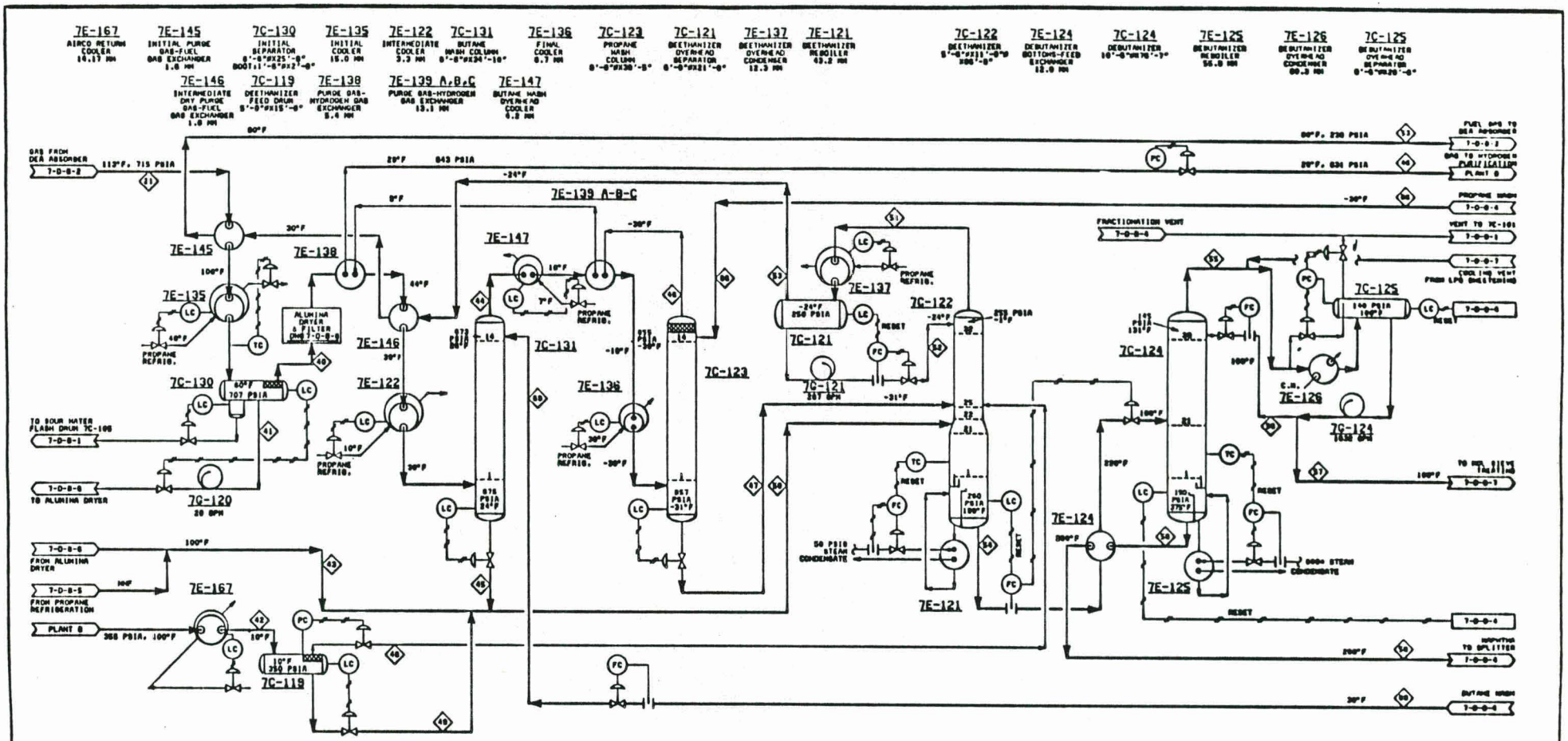

STREAM NO.	21	40	41	42	44	45	46	47	48	49	50	51	52	53	54	55	56	57	58	59	60
DESCRIPTION / COMPONENT		INITIAL SEPARATOR GAS	INITIAL CONDEN-SATE	DRY CONDEN-SATE	C_3-WASH OVER-HEAD	C_4-WASH BTM LIQUID	GAS TO AIRCO PLANT	C_5-WASH BTM LIQUID	VAP-LIQ RECYCLE FROM AIRCO PL	AIRCO PLANT 8 GAS	AIRCO PLANT 8 LIQUID	DEETHA-NIZER FEED	DE-C_3 OVERHEAD VAPOR	DE-C_3 REFLUX	FUEL GAS	DE-C_3 BTMS	DE-C_3 OVERHEAD VAPOR	DE-C REFLUX	DE-C OVER-HEAD PRODUCT	DE-C HOT BTM		
BPSD (MMSCFD)	(301.3)	300.7)	864.8	18.828	1299.0)	7.459	(290.3)	10.278	-	(7.7)	10.489	29.787	(42.1)	11.537	(23.4)	29.725	170.91	29.764	27.302	18.042	4.751	6.027
°API (MM)	19.21)	18.1)	86.4	62.0	18.1)	126.6	18.0)	92.0	-	123.7)	189.0	181.0	20.8	182.1)	124.1)	86.8	150.1)	126.1	129.7	50.2	149.8	112.7
LBS/HR TOTAL	309,824	301,175	8,241	200,848	289,957	60,092	256,588	77,828	89,847	20,041	85,509	329,214	124,937	82,222	81,018	383,274	287,439	211,334	178,109	186,265	34,960	58,035
COMPONENT, MPH																						
H_2O	42.3	11.4	-	-	-	-	-	-	-	-	-	-	-	-	-	-	-	-	-	-	-	-
H_2	23,531.1	23,534.4	2.3	52.3	23,488.2	36.0	23,445.7	50.5	45.8	42.1	3.5	83.8	190.0	3.8	186.3	0.0	0.0	0.0	0.0	0.0	0.0	0.0
INERTS	2,481.7	2,481.9	0.4	8.2	2,474.0	7.8	2,480.5	13.5	45.8	39.2	6.6	22.0	79.2	3.8	75.5	0.0	0.0	0.0	0.0	0.0	0.0	0.0
CO_2	-	0.0	0.0	0.6	0.0	0.0	0.0	0.0	0.0	0.0	0.0	0.6	0.8	0.2	0.6	0.0	0.0	0.0	0.0	0.0	0.0	0.0
H_2S	(24)	0.0	0.0	20.3	0.0	0.0	0.0	0.0	0.0	0.0	0.0	20.2	24.0	18.3	15.8	4.4	8.7	5.3	4.4	0.0	0.0	0.0
MeS	-	0.0	0.0	0.0	0.0	0.0	0.0	0.0	0.0	0.0	0.0	0.0	0.0	0.0	0.0	0.0	0.0	0.0	0.0	0.0	0.0	0.0
C_1	2,961.8	2,960.8	2.4	47.3	2,917.8	43.0	2,831.5	86.0	557.8	377.7	180.1	270.4	850.7	115.8	734.0	0.0	0.0	0.0	0.0	0.0	0.0	0.0
C_2's	1,583.1	1,578.0	5.8	100.0	1,485.6	112.4	1,232.8	272.7	1,115.8	302.5	813.4	1,024.8	2,287.5	1,761.8	1,524.3	78.8	188.5	91.8	78.6	0.0	40.0	0.0
C_3's	835.2	823.1	12.3	188.7	648.2	287.0	837.2	471.0	832.3	84.4	847.8	1,303.8	182.1	152.8	29.3	1,028.8	4,025.8	2,195.8	1,828.8	0.0	749.0	12.8
C_4's	402.8	388.1	18.8	238.1	800.4	554.8	12.2	806.2	12.2	0.4	11.8	805.9	0.1	0.1	0.0	1,614.2	3,524.0	1,822.2	1,801.8	12.3	29.0	844.1
C_5's - 400°F	182.2	142.8	84.4	1,790.0	4.5	157.7	0.0	4.5	0.0	0.0	0.0	1847.7	0.0	0.0	0.0	1,952.2	7.7	4.2	22.0	1,898.2	0.0	13.8
400°F+	-	0.0	0.0	0.8	0.0	0.0	0.0	0.0	0.0	0.0	0.0	4.8	0.0	0.0	0.0	0.8	0.0	0.0	0.0	6.8	0.0	0.0
TOTAL MPH	33,131.5	31,010.4	84.5	2,453.2	33,020.5	1,100.8	31,820.8	1,706.4	2,708.0	848.3	1,863.3	5,487.8	4,024.5	2,058.8	2,515.8	5,484.0	7,735.5	4,218.4	3,944.6	1,838.3	800.0	1,000

NOTES:

1. MM = 1,000,000 BTU/HR
2. MMSCFD AT 60°F AND 14.7 PSIA
3. PUMP BPM ARE AT FLOW CONDITIONS
4. NC = NORMALLY CLOSED
5. INERTS = N_2 + CO
6. NNF = NORMALLY NO FLOW

1	12/16/81	ISSUED FOR PHASE 8
0	8/3/81	ISSUED FOR REVIEW/APPROVAL

BRECKINRIDGE PROJECT

7.3 PROCESS FLOW DIAGRAM PLANT 7 GAS PLANT PRODUCT FRACTIONATION

14222 | 7-D-8-3 | 1

Figure 11
Sheet 1 of 2

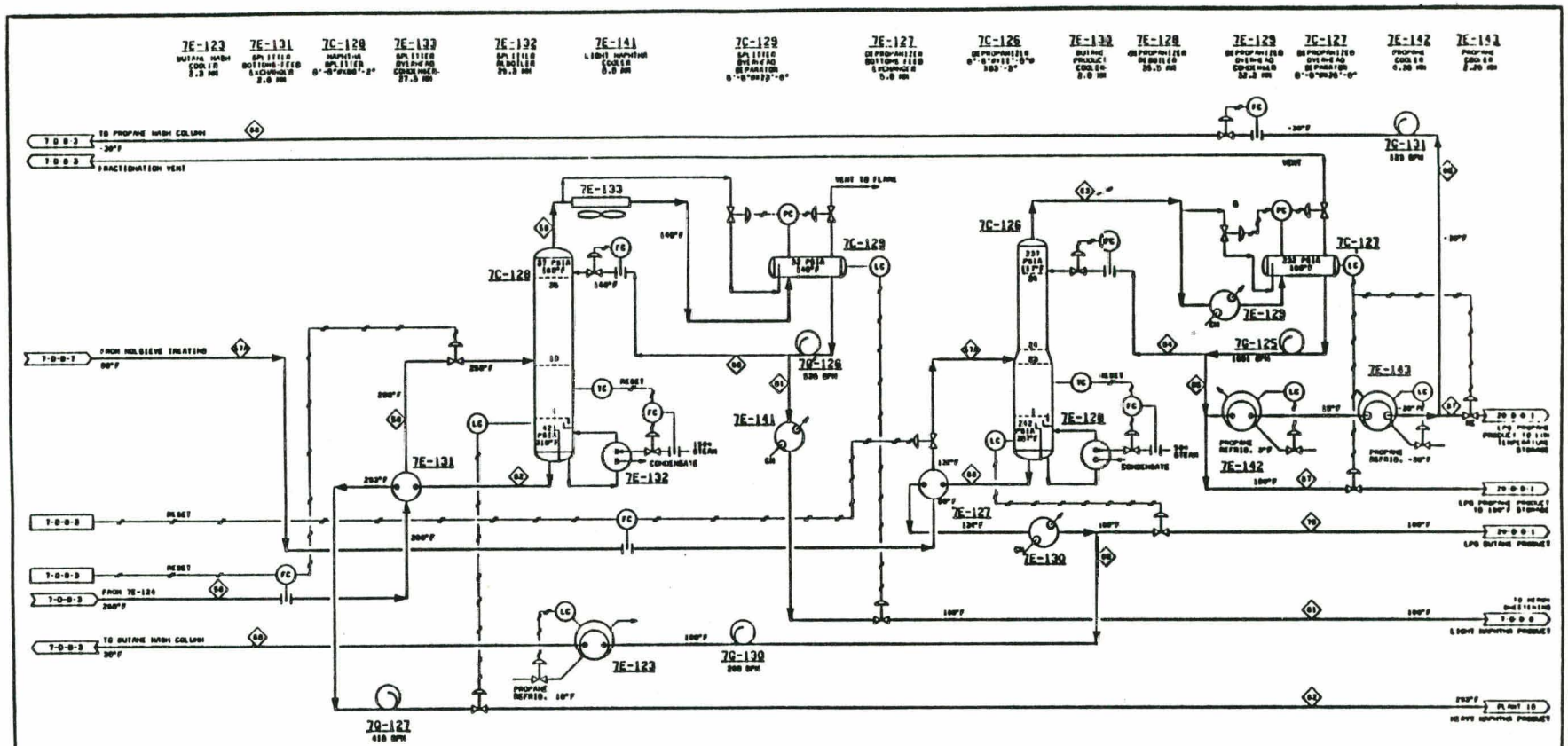

STREAM NO.	17	50	10	60	01	02	03	04	05	06	07	08	09	10
DESCRIPTION	DE-C4 OVHD PRODUCT	DE-C4 BTM	NAPHTHA SPLITTER OVHD VAPOR	NAPHTHA SPLITTER REFLUX	LIGHT NAPHTHA PRODUCT	HEAVY NAPHTHA PRODUCT	DE-C3 OVHD VAPOR	DE-C3 REFLUX	PROPANE PRODUCT & WASH	PROPANE WASH	PROPANE PRODUCT TO STORAGE	DE-C3 BOTTOMS	BUTANE WASH	BUTANE PRODUCT TO STORAGE
BPSD (MMSCFD)	27.288	10.122	120.01	13.001	4.002	12.002	146.31	20.502	11.142	1.771	0.393	11.141	8.027	4.276
°API (MM)	129.7	90.3	172.31	70.7	70.7	42.5	143.01	140.3	140.1	140.0	140.0	112.7	112.7	112.7
LB/HR TOTAL	175.057	106.705	180.165	120.115	40.935	148.215	232.232	164.521	81.041	24.940	40.047	94.171	58.575	38.118
COMPONENT MPH														
H2O	0.0	0.0	0.0	0.0	0.0	0.0	0.0	0.0	0.0	0.0	0.0	0.0	0.0	0.0
N2	0.0	0.0	0.0	0.0	0.0	0.0	0.0	0.0	0.0	0.0	0.0	0.0	0.0	0.0
IN RIG	0.0	0.0	0.0	0.0	0.0	0.0	0.0	0.0	0.0	0.0	0.0	0.0	0.0	0.0
CO2	0.0	0.0	0.0	0.0	0.0	0.0	0.0	0.0	0.0	0.0	0.0	0.0	0.0	0.0
H2S	0.0	0.0	0.0	0.0	0.0	0.0	0.0	0.0	0.0	0.0	0.0	0.0	0.0	0.0
NH3	0.0	0.0	0.0	0.0	0.0	0.0	0.0	0.0	0.0	0.0	0.0	0.0	0.0	0.0
C1	0.0	0.0	0.0	0.0	0.0	0.0	0.0	0.0	0.0	0.0	0.0	0.0	0.0	0.0
C2'S	70.0	0.0	0.0	0.0	0.0	0.0	211.7	141.0	70.0	10.0	60.0	0.0	0.0	0.0
C3'S	1,079.0	0.0	0.0	0.0	0.0	0.0	4,067.0	2,710.1	1,340.0	340.0	1000.0	90.0	10.0	80.0
C4'S	1,601.0	12.0	51.0	30.5	12.0	0.0	120.0	70.0	42.0	10.0	30.0	1,550.0	840.0	230.0
C5'S - 400°F	30.0	1,050.0	2,210.0	1,200.0	505.0	1,410.0	0.0	0.0	0.0	0.0	0.0	30.0	10.0	10.0
400°F+	0.0	0.0	0.0	0.0	0.0	0.0	0.0	0.0	0.0	0.0	0.0	0.0	0.0	0.0
TOTAL MPH	3940.0	1,059.0	2,261.0	1,245.5	517.0	1,421.0	4,395.0	2,921.0	1,861.0	360.0	1,090.0	1,670.0	1,060.0	650.0

NOTES:
1. MM = 1,000,000 BTU/HR
2. MMSCFD AT 60°F AND 14.7 PSIA
3. PUMP RPM ARE AT FLOW CONDITIONS
4. NC = NORMALLY CLOSED
5. SNERIS = H_2 + CO

NO.	DATE	REVISIONS	BY	CHK	APP
1	8/1/79	ISSUED FOR PHASE 0			
0	8/1/79	ISSUED FOR REVIEW/APPROVAL			

BRECKINRIDGE PROJECT

7.3 PROCESS FLOW DIAGRAM
PLANT 7 GAS PLANT
PRODUCT FRACTIONATION

14222 | 7-D-B-4 | 1

Figure 11
Sheet 2 of 2

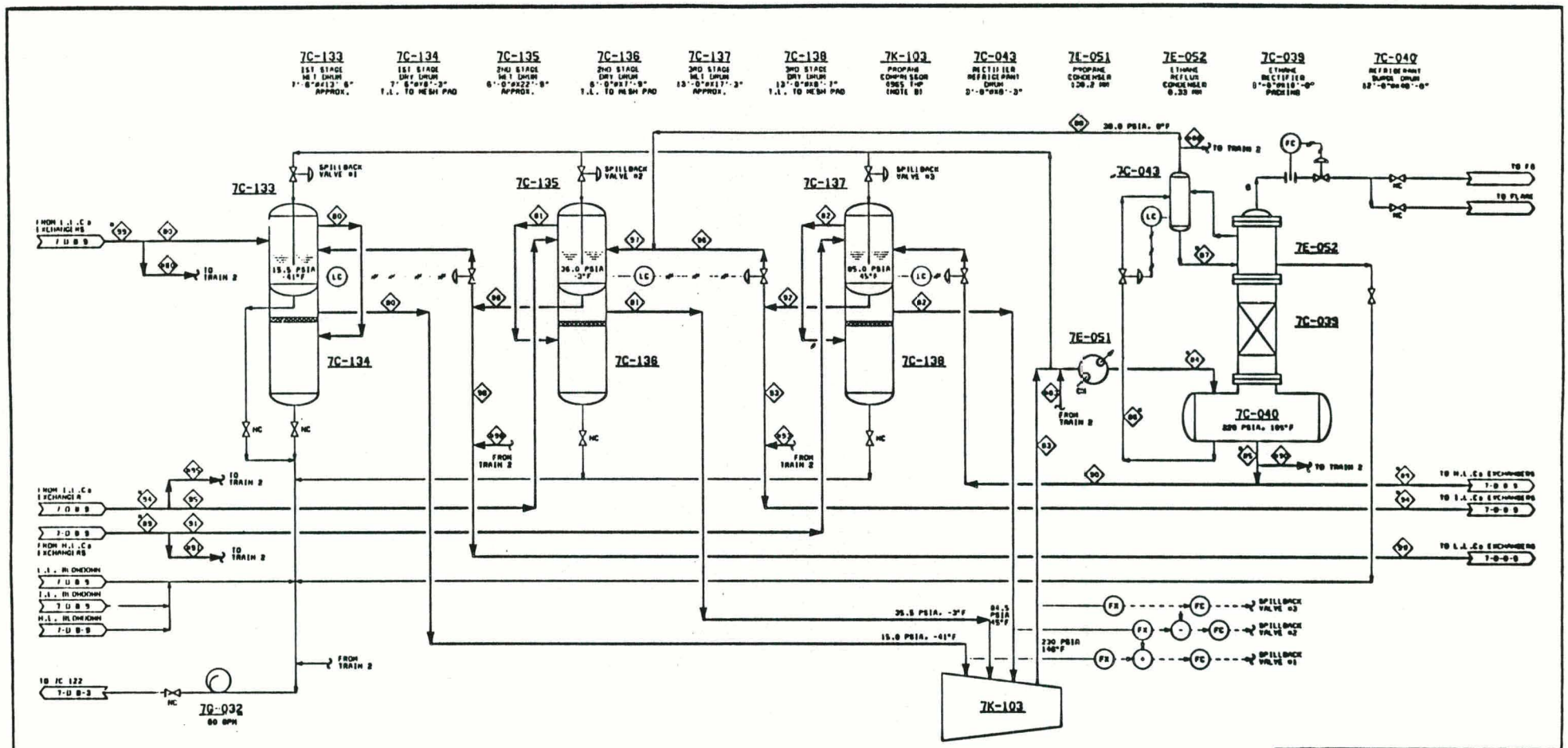

NOTES:

1. MM = 1,000,000 BTU/HR
2. MMSCFD AT 60°F AND 14.7 PSIA.
3. PUMP GPM ARE AT FLOW CONDITIONS.
4. NC = NORMALLY CLOSED.
5. SYSTEM DESIGNED TO USE COMMERCIAL GRADE PROPANE.
6. ALL PROPANE SIDE EQUIPMENT MUST BE DESIGNED FOR FULL BEITLE OUT PRESSURE OF PROPANE AT AMBIENT TEMPERATURE.
7. STREAM NUMBERS WITH ◇ ARE FOR TRAIN 2 ONLY. STREAM NUMBERS WITH ◇ ARE COMMON FOR BOTH TRAINS.
8. COMPRESSOR SYSTEM CONSISTS OF THREE SIX CAPACITY MACHINES CONNECTED IN PARALLEL. THEORETICAL HP SHOWN IS FOR SIX CAPACITY. ALSO INCLUDED ARE 2 PARALLEL TRAINS OF 1ST, 2ND AND 3RD STAGE HET AND DRY DRUMS. NORMAL OPERATION WILL BE WITH TWO MACHINES IN SERVICE AND ONE SPARE STAND-BY.

STREAM NO. / DESCRIPTION / COMPONENT	80 FIRST STAGE COMP. SUCTION	81 SECOND STAGE COMP. SUCTION	82 THIRD STAGE COMP. SUCTION	83 COMP. DISCH.	84 LIQUID PROPANE TO SURGE DRUM	85 LIQUID PROPANE FROM SURGE DRUM	86 LIQUID PROPANE TO RECTIFIER REFRIGERANT DRUM	87 LIQUID PROPANE TO ETHANE REFLUX CONDENSER	88 VAPOR PROPANE FR RECTIFIER REFRIGERANT DRUM	89 PROPANE TO HIGH LEVEL COOLERS	90 PROPANE TO 3RD STAGE HET DRUM	91 PROPANE FROM HIGH LEVEL COOLERS	92 LIQUID PROPANE FROM 3RD STAGE HET DRUM	93 PROPANE TO INTERMED. LEVEL COOLERS	94 TOTAL PROPANE TO INTERMED. LEVEL COOLERS	95 PROPANE FROM INTERMED. LEVEL COOLERS	96 PROPANE TO 2ND STAGE HET DRUM	97 VAP/LIQ PROPANE TO 2ND STAGE HET DRUM	98 LIQUID PROPANE FROM 2ND STAGE HET DRUM	99 PROPANE TO LOW LEVEL COOLERS
LB/HR TOTAL	85,534	81,292	330,875	457,801	815,802	818,834	5,168	2,167	2,583	58,292	164,672	290,848	124,343	48,050	92,100	48,050	78,293	80,076	85,534	131,067
TOTAL MPH	1,486	1,392	7,507	10,386	20,771	20,854	117	72	58	13,184	3,735	6,592	2,820	1,044	2,089	1,044	1,776	1,834	1,486	2,973

ISSUED FOR PHASE B
ISSUED FOR REVIEW/APPROVAL

BRECKINRIDGE PROJECT

PROCESS FLOW DIAGRAM
PLANT 7 - GAS PLANT
REFRIGERATION

7.4

14222 | 7-D-8-5 | 1

Figure 12
Sheet 1 of 5

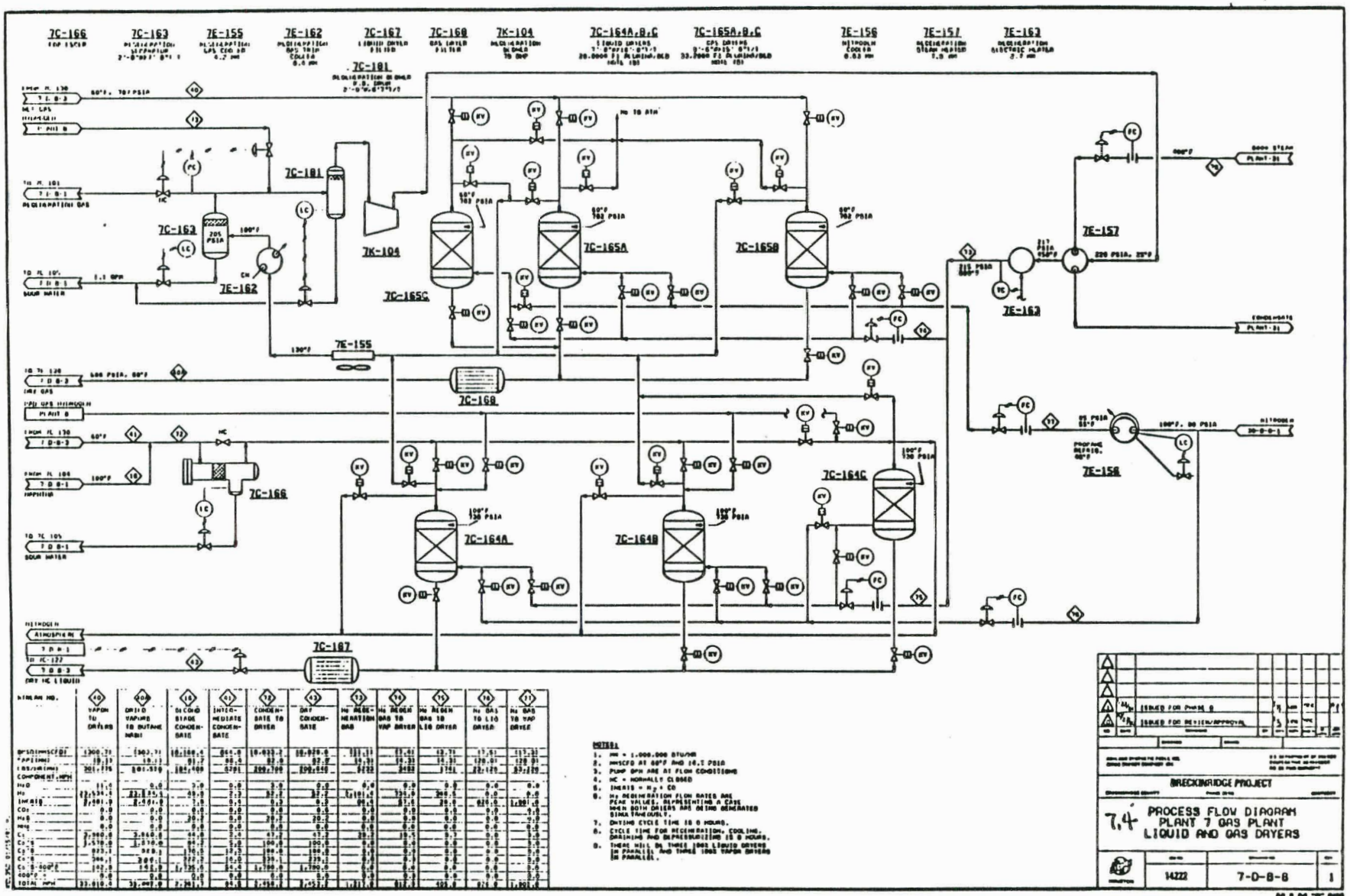

Figure 12
Sheet 2 of 5

B14

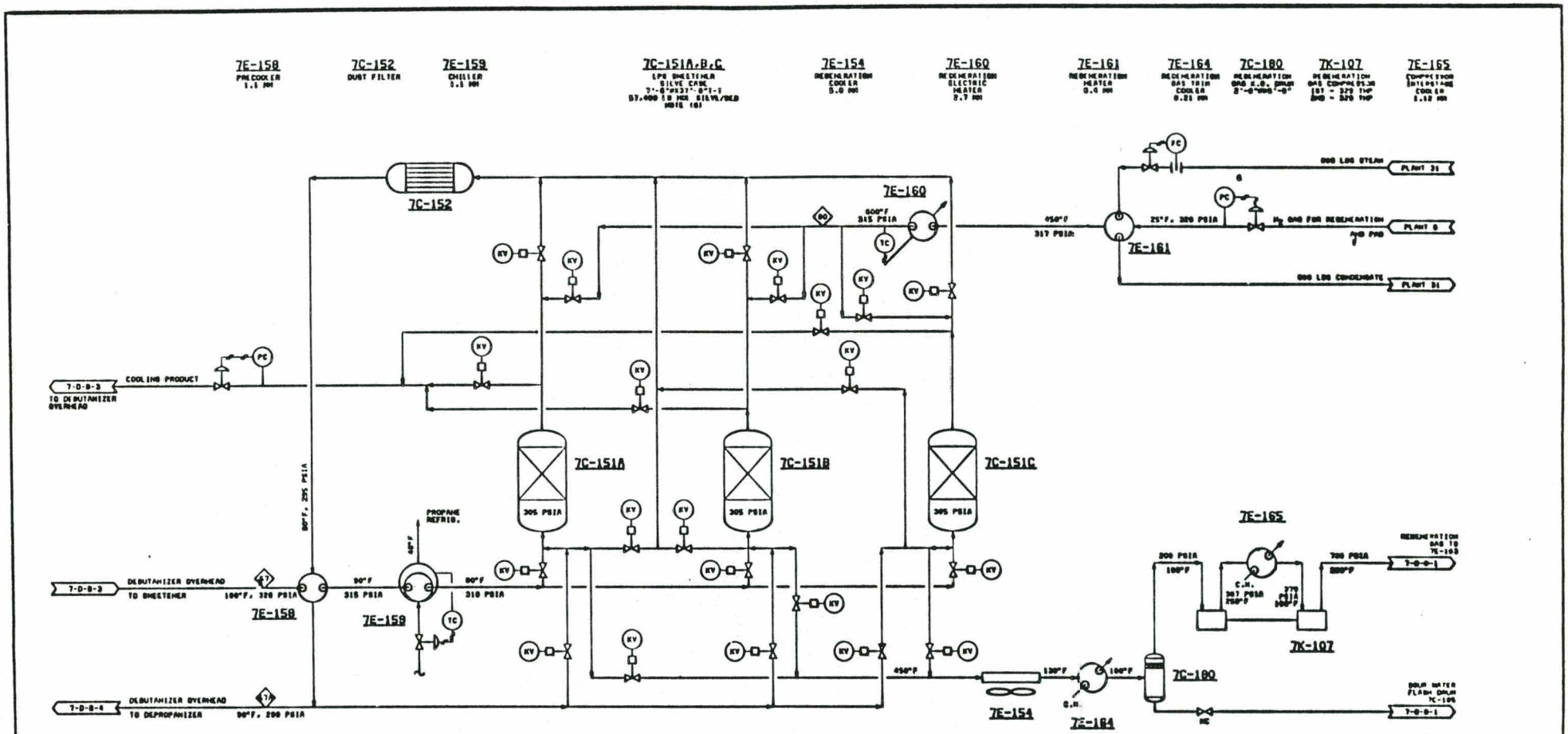

STREAM NO.	37 DE-C4 DYNO FEED	37A SWEET DE-C4 DYNO PRODUCT	80 H2 GAS FOR RE-GENERATION
BPSD (MMSCFD)	22,300.0	22,282.7	(9.0)
°API (MM)	129.1	129.7	(4.4)
LBS/HR TOTAL	176,111	175,957	4,347
COMPONENT			
H_2O	0.0	0.0	0.0
H_2	0.0	0.0	884.2
INERTS	0.0	0.0	70.1
CO_2	0.0	0.0	0.0
H_2S	1.4	0.0	0.0
NH_3	0.0	0.0	0.0
C_1	0.0	0.0	23.7
C_2'S	76.6	76.6	0.0
C_3'S	1,829.8	1,829.8	0.0
C_4'S - 400°F	1,801.8	1,801.8	0.0
400°F +	88.0	88.0	0.0
TOTAL MPH	0.0	0.0	0.0
	3,544.6	3549.8	949.0

NOTES:

1. MM = 1,000,000 BTU/HR
2. MMSCFD AT 60°F AND 14.7 PSIA
3. INERTS = N_2 + CO
4. SWEETENING CYCLE TIME IS 8 HOURS.
5. CYCLE TIME FOR REGENERATION, COOLING AND FILLING, DRAINING = 8 HRS. TIME FOR COOLING AND FILLING STEP IS 2.5 HRS. THE FLOW OF SWEET PRODUCT FOR COOLING IS 80,000 LB/HR.
6. LPG SWEETENER CONSISTS OF THREE 100% BEDS IN PARALLEL.

ISSUED FOR PHASE B

ISSUED FOR REVIEW/APPROVAL

BRECKENRIDGE PROJECT

7.4 PROCESS FLOW DIAGRAM
PLANT 7 GAS PLANT
LPG SWEETENER

14222 | 7-D-B-7 | 1

Figure 12
Sheet 3 of 5

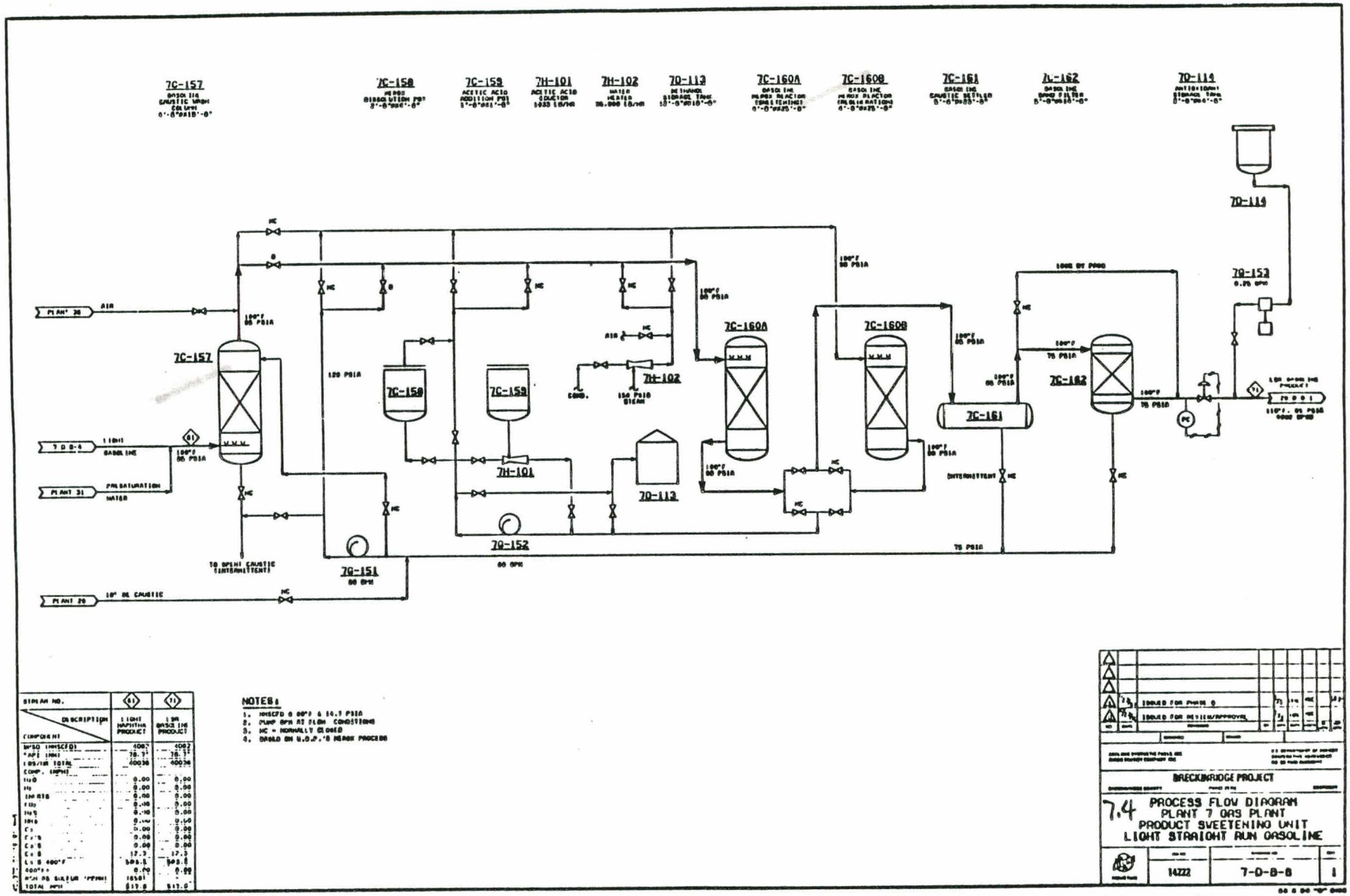

STREAM NO.	41	71
DESCRIPTION / COMPONENT	LIGHT NAPHTHA PRODUCT	LIGHT GASOLINE PRODUCT
MFSD (MMSCFD)	4087	4087
°API (MM)	78.11	78.11
LBS/HR TOTAL	40038	40038
COMP. (MPH)		
H_2O	0.00	0.00
H_2	0.00	0.00
INERTS	0.00	0.00
H_2S	0.00	0.00
H_2S	0.00	0.00
H_2S	0.00	0.00
C_1	0.00	0.00
C_1'S	0.00	0.00
C_2'S	0.00	0.00
C_3'S	17.3	17.3
C_4'S 400°F	565.5	565.5
400°F+	0.00	0.00
MPH AS SULFUR (PPMW)	16581	-
TOTAL MPH	617.8	617.8

NOTES:
1. MMSCFD @ 60°F & 14.7 PSIA
2. PUMP GPM AT FLOW CONDITIONS
3. NC = NORMALLY CLOSED
4. BASED ON U.O.P.'S MEROX PROCESS

NO.	DATE	REVISIONS	BY	CHK	APP
1	7/8/79	ISSUED FOR PHASE 0			
0	7/6/79	ISSUED FOR REVIEW/APPROVAL			

BRECKINRIDGE PROJECT

7.4 PROCESS FLOW DIAGRAM
PLANT 7 GAS PLANT
PRODUCT SWEETENING UNIT
LIGHT STRAIGHT RUN GASOLINE

14222 | 7-D-8-8 | 1

Figure 12
Sheet 4 of 5

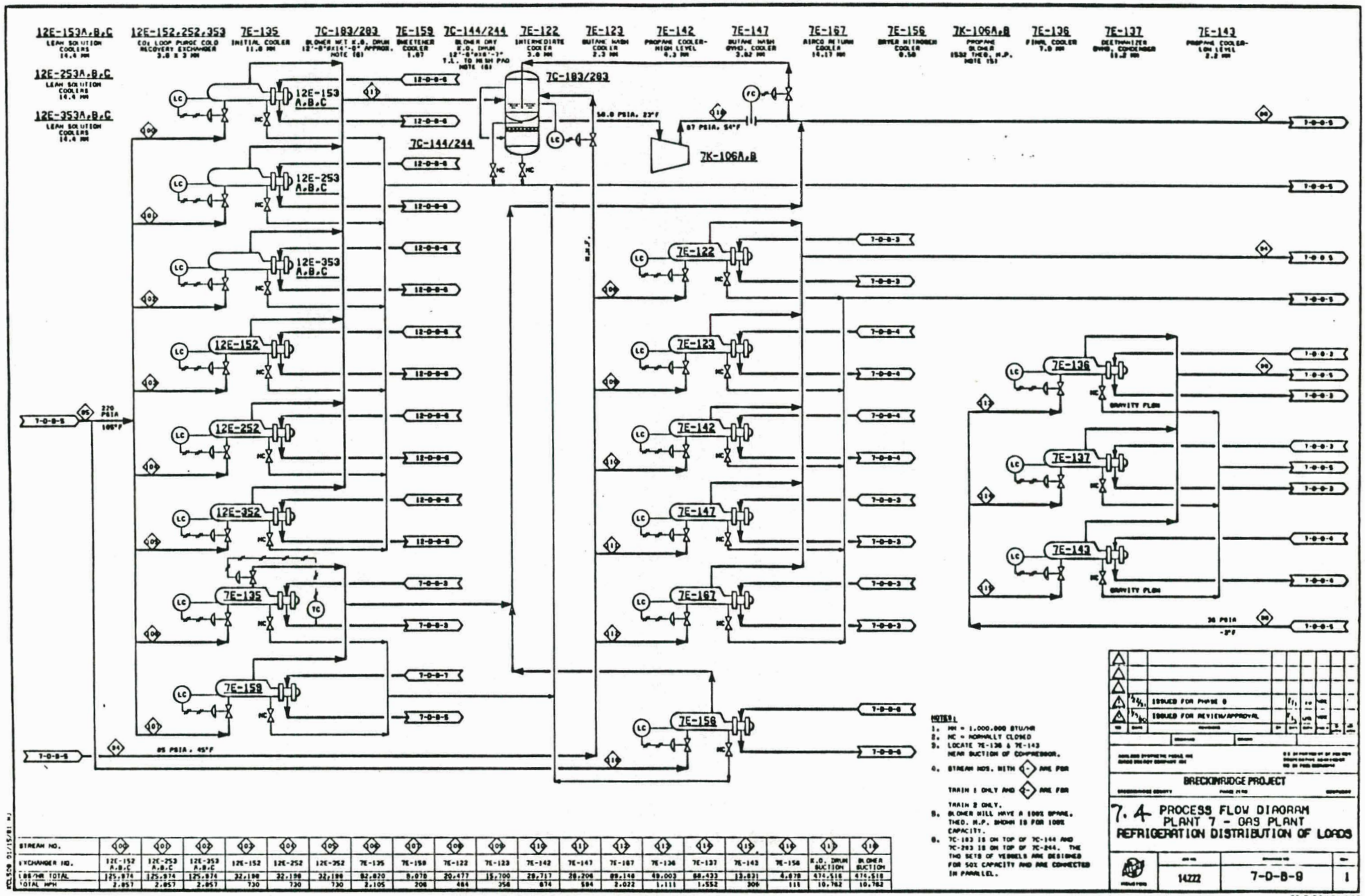

STREAM NO.	01	02	03	04	05	06	07	08	09	10	11	12	13	14	15	16	1	1
EXCHANGER NO.	12E-152 A,B,C	12E-253 A,B,C	12E-353 A,B,C	12E-152	12E-252	12E-352	7E-135	7E-159	7E-122	7E-123	7E-142	7E-147	7E-167	7E-136	7E-137	7E-143	K.O. DRUM SUCTION	BLOWER SUCTION
LBS/HR TOTAL	125,974	125,974	125,974	32,198	32,198	32,198	82,820	8,078	20,477	15,700	28,717	28,208	89,148	49,003	88,433	13,831	474,518	474,518
TOTAL MMH	2.057	2.057	2.057	730	730	730	2.105	206	484	358	674	594	2.022	1.111	1.552	309	10.762	10.762

Figure 12
Sheet 5 of 5

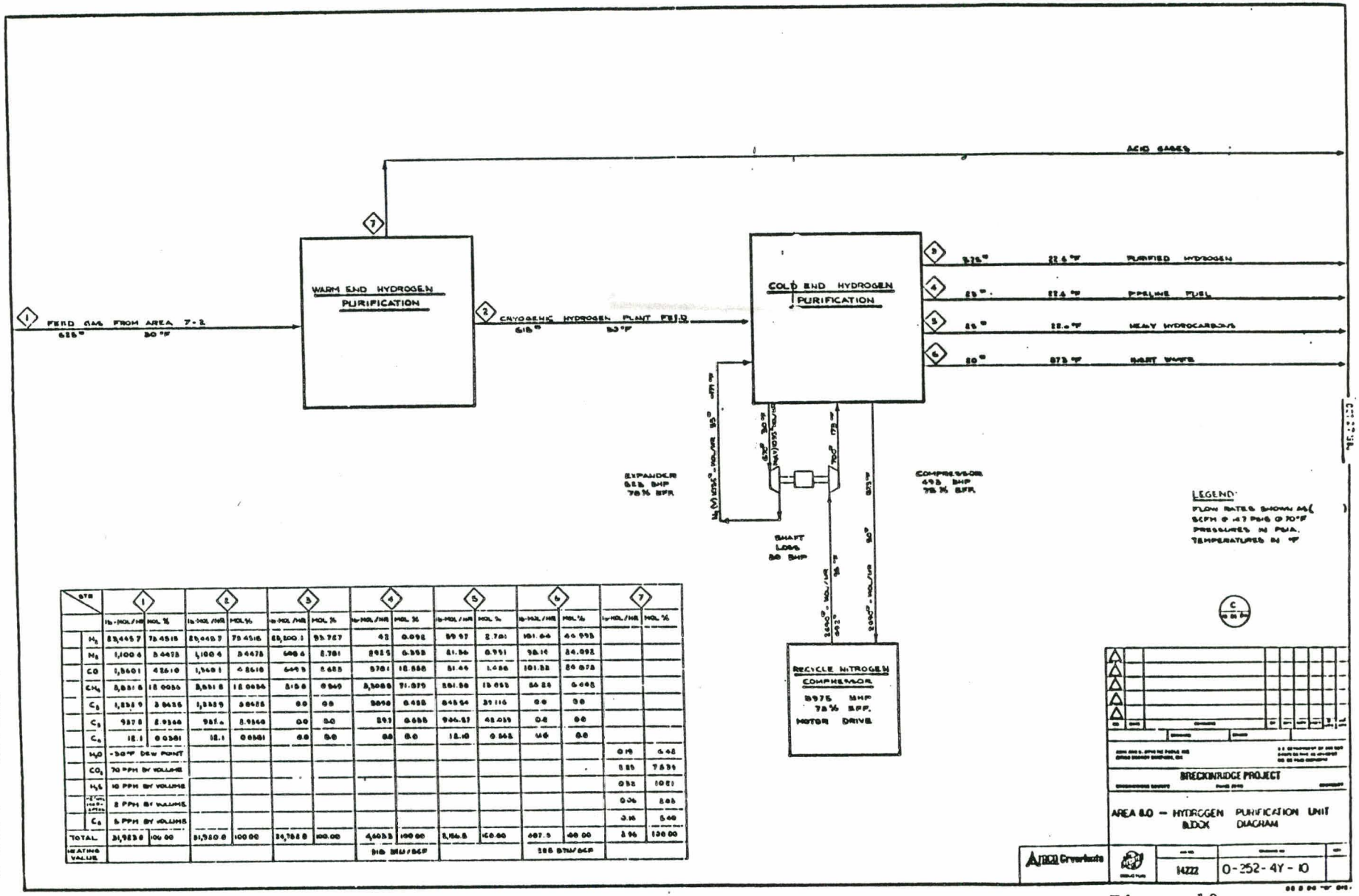

STR	1		2		3		4		5		6		7	
	lb-MOL/HR	MOL %	lb-MOL/HR	MOL %	lb-MOL/HR	MOL %	lb-MOL/HR	MOL %	lb-MOL/HR	MOL %	lb-MOL/HR	MOL %	lb-MOL/HR	MOL %
H_2	23,445.7	73.4515	23,445.7	73.4515	23,200.1	93.727	42	0.092	59.97	2.701	181.64	64.993		
N_2	1,100.4	3.4475	1,100.4	3.4475	606.4	2.781	2815	6.393	81.56	0.951	98.14	34.092		
CO	1,360.1	4.2610	1,360.1	4.2610	649.5	2.625	5781	12.888	81.44	1.486	101.52	36.075		
CH_4	3,851.5	12.0656	3,851.5	12.0656	315.8	0.949	3,3088	71.079	251.50	15.055	56.26	6.445		
C_2	1,258.9	3.9435	1,258.9	3.9435	0.0	0.0	3090	6.455	845.54	39.116	0.0	0.0		
C_3	987.8	3.0940	987.8	3.0940	0.0	0.0	293	0.655	904.57	42.039	0.0	0.0		
C_4	12.1	0.0381	12.1	0.0381	0.0	0.0	0.0	0.0	12.10	0.562	14.6	0.0		
H_2O	-50°F DEW POINT												0.19	5.42
CO_2	70 PPM BY VOLUME												3.25	73.39
H_2S	10 PPM BY VOLUME												0.52	10.21
TOTAL SULFUR COMPOUNDS	2 PPM BY VOLUME												0.06	2.05
C_6	5 PPM BY VOLUME												0.16	5.40
TOTAL	31,983.8	100.00	31,920.8	100.00	24,788.8	100.00	4,603.3	100.00	3,166.5	100.00	607.5	100.00	3.96	100.00
HEATING VALUE							918 BTU/SCF				1215 BTU/SCF			

Figure 13
Sheet 1 of 3

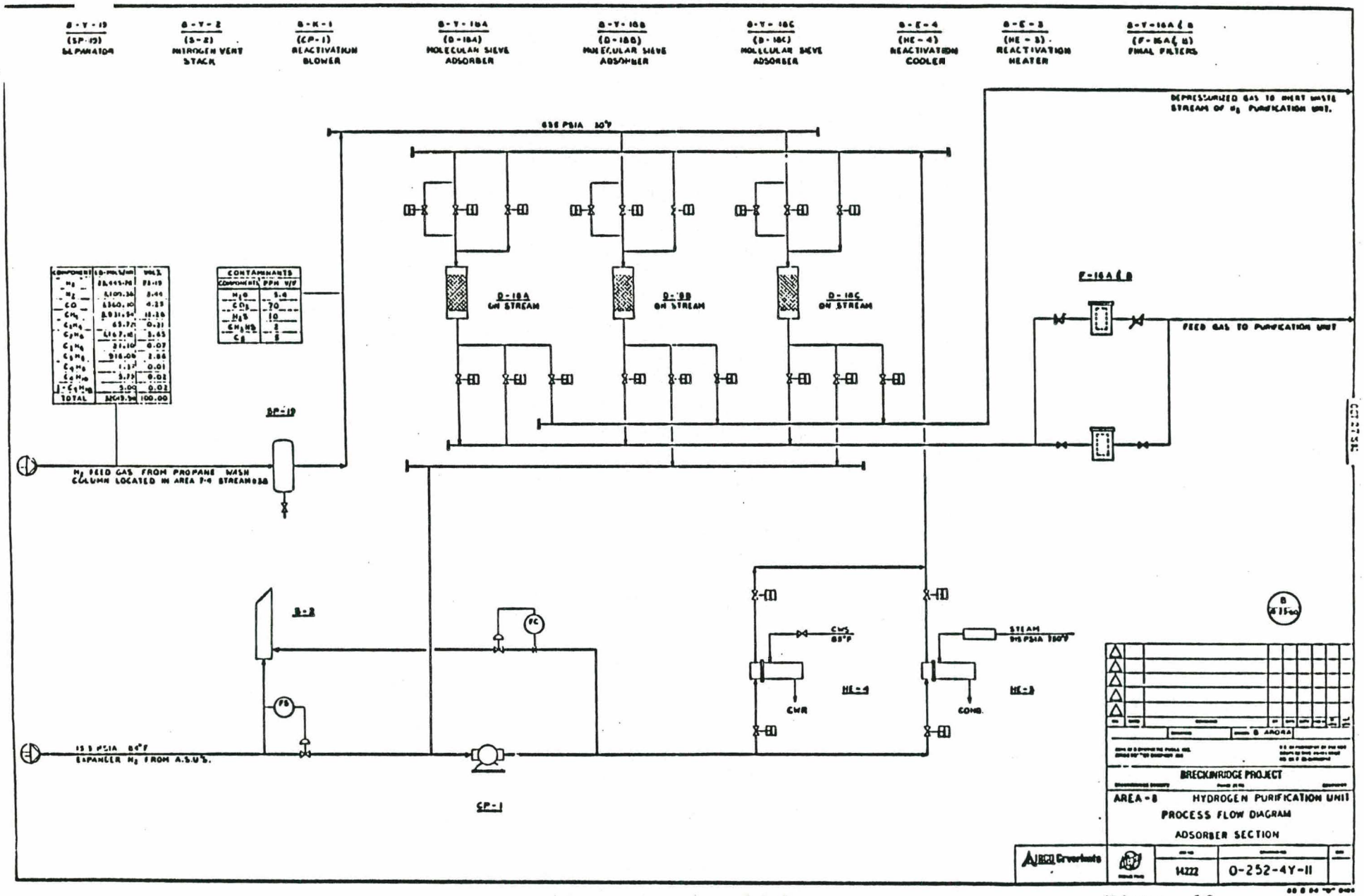

Figure 13
Sheet 2 of 3

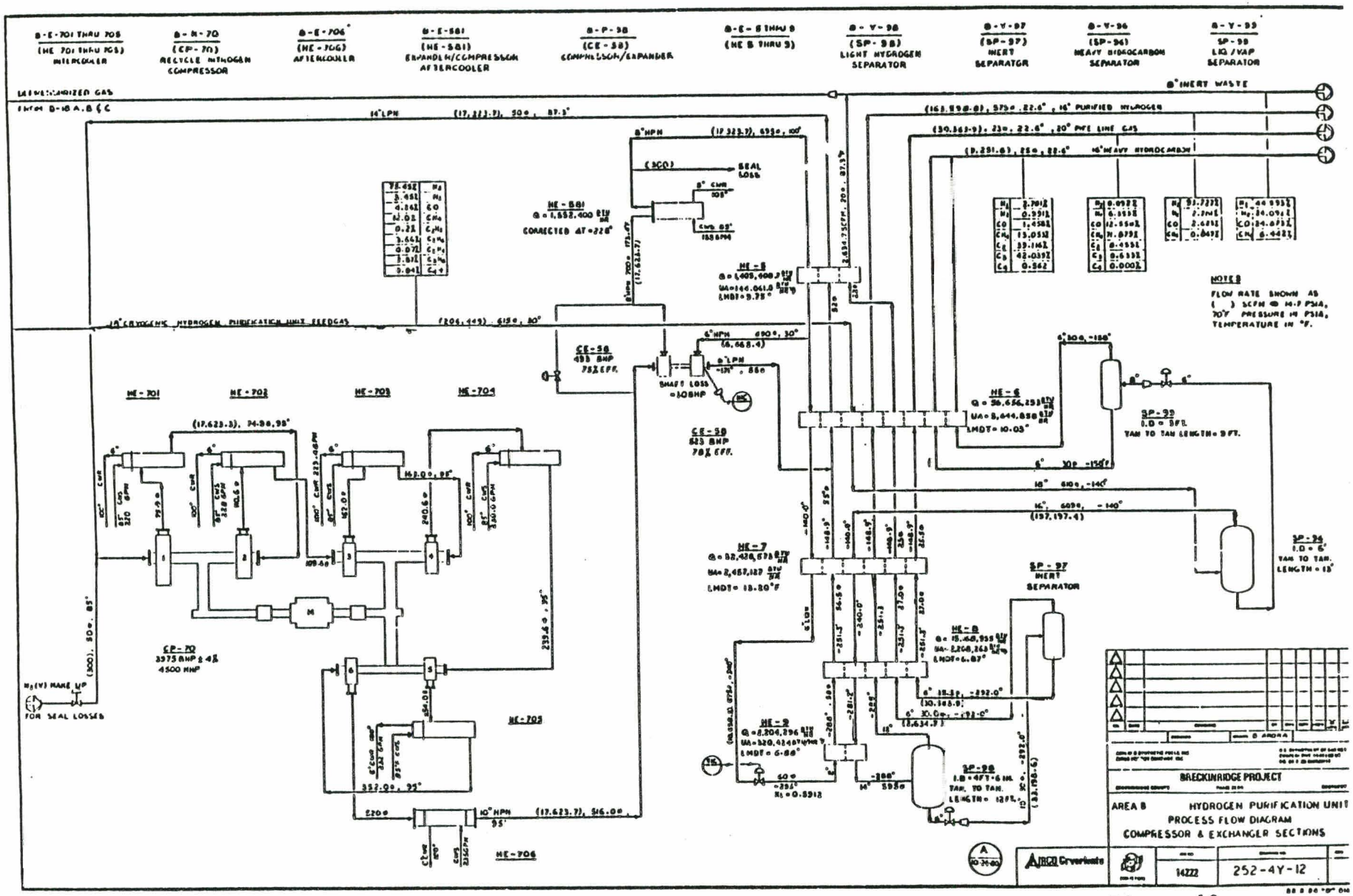

Figure 13
Sheet 3 of 3

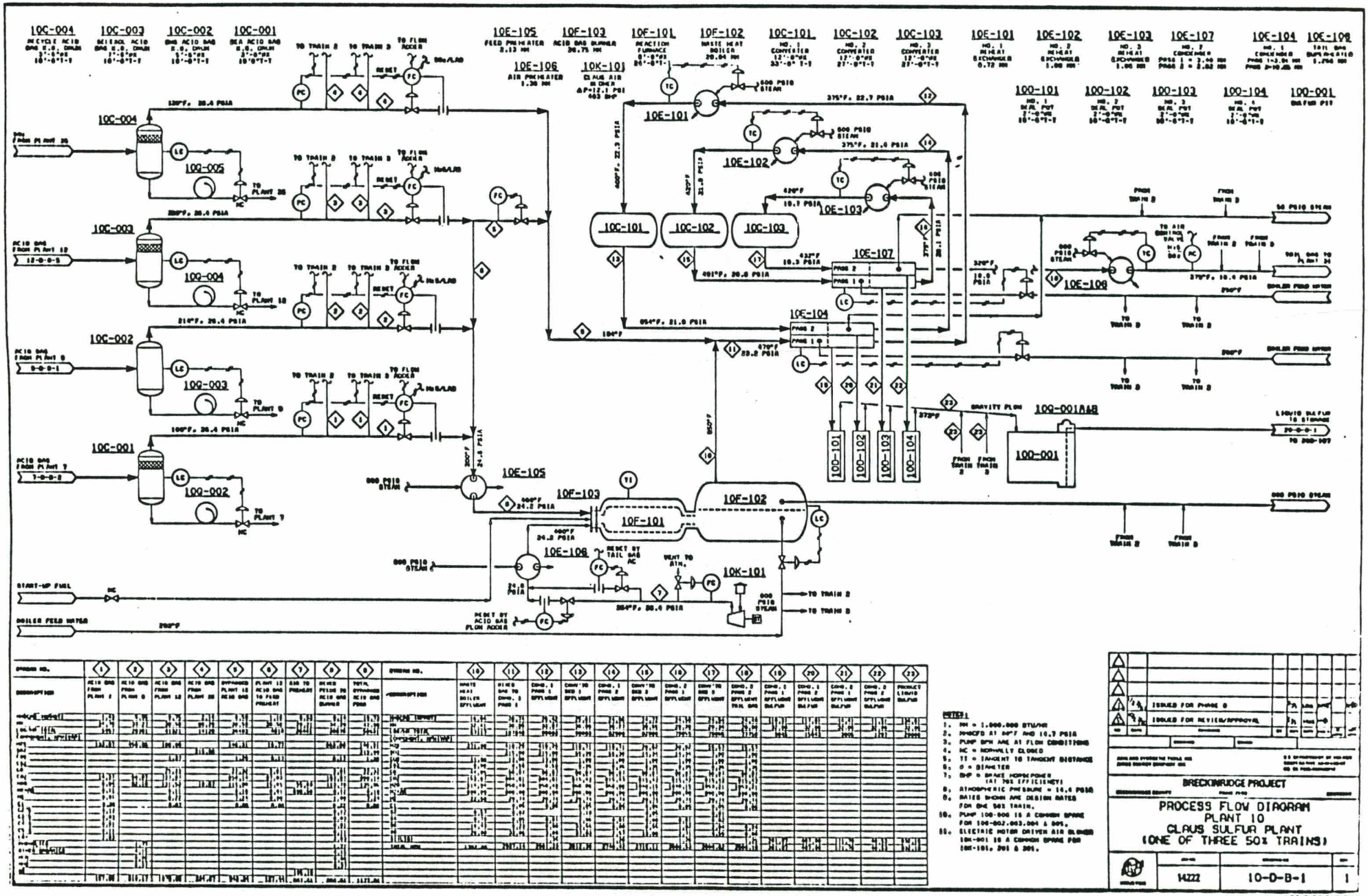
10C-004
10C-003
10C-002
10C-001
10E-105
10F-103
10F-101
10F-102
10C-101
10C-102
10C-103
10E-101
10E-102
10E-103
10E-107
10E-104
10E-108
10E-106
10K-101
100-101
100-102
100-103
100-104
100-001
100-001AAB
100-005
100-004
100-003
100-002
TO TRAIN 2
TO TRAIN 3
TO FLOW ADDER
RESET
TO PLANT 26
TO PLANT 18
TO PLANT 9
TO PLANT 7
GRAVITY FLOW
START-UP FUEL
BOILER FEED WATER
RESET BY ACID GAS FLOW ADDER
RESET BY TAIL GAS
VENT TO ATM.
NOTES:
1. MM = 1,000,000 BTU/HR
2. MMCFD AT 60°F AND 14.7 PSIA
3. PUMP BPM ARE AT FLOW CONDITIONS
4. NC = NORMALLY CLOSED
5. TT = TANGENT TO TANGENT DISTANCE
6. D = DIAMETER
7. BHP = BRAKE HORSEPOWER (AT 70% EFFICIENCY)
8. ATMOSPHERIC PRESSURE = 14.6 PSIA
9. RATES SHOWN ARE DESIGN RATES FOR ONE 50% TRAIN.
10. PUMP 100-006 IS A COMMON SPARE FOR 100-002,003,004 & 005.
11. ELECTRIC MOTOR DRIVEN AIR BLOWER 10K-001 IS A COMMON SPARE FOR 10K-101, 201 & 301.
ISSUED FOR PHASE B
ISSUED FOR REVIEW/APPROVAL
BRECKINRIDGE PROJECT
PROCESS FLOW DIAGRAM
PLANT 10
CLAUS SULFUR PLANT
(ONE OF THREE 50% TRAINS)
14222
10-D-B-1
1

Figure 14

Figure 15 contains proprietary information, and is available for review at Bechtel's Houston offices.

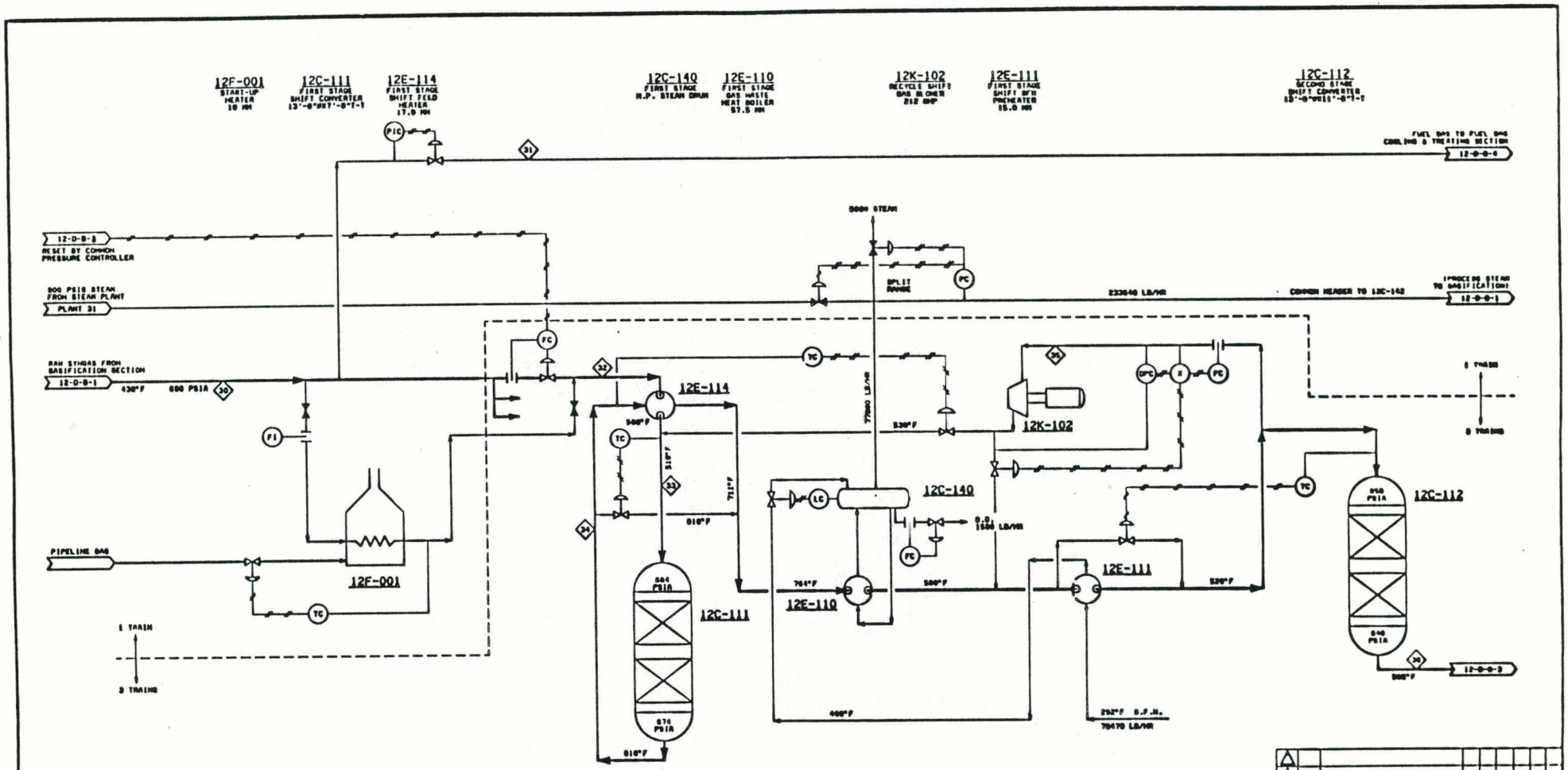

STREAM NO.	30	31	32	33	34	35	36
DESCRIPTION / COMPONENT	RAW SYNGAS FEED	RAW GAS TO COOLING	SHIFT SECTION FEED	FIRST STAGE CONVERTER FEED	FIRST STAGE EXIT	RECYCLE SHIFT GAS	SECOND STAGE EXIT
MMSCFD	882.3	211.1	257.1	304.0	304.0	46.9	257.1
MM	10.40	10.40	10.40	10.40	10.40	10.40	10.38
LB/HR TOTAL	1984420.	426462.	510317.	614031.	614031.	94714.	510317.
COMPONENT, MOLS/HR							
H_2	19029.5	4099.5	4990.0	6908.0	12503.0	1820.0	11173.0
CO	24796.2	5329.0	6489.1	8452.1	1057.1	163.0	295.2
CO_2	3632.2	737.8	898.2	2063.3	7682.5	1185.1	7096.5
H_2O	59831.0	12878.5	15682.0	17523.1	11823.0	1820.2	8485.0
CH_4	144.8	31.1	37.8	44.7	44.7	0.0	37.8
H_2S	283.0	61.0	74.3	88.6	82.0	14.3	78.7
COS	17.7	3.8	4.6	4.7	0.50	0.08	0.17
N_2	182.0	39.1	47.6	56.3	56.3	8.7	47.6
AR	54.0	12.7	15.4	18.2	18.2	2.8	15.4
MPH, TOTAL	107875.6	23183.1	28230.0	33370.0	33370.0	5140.0	28230.0

NOTES:

1. STREAMS(32)THROUGH(34)1/3 OF THE TOTAL FLOW. (1 TRAIN OUT OF 3)
2. THE CONDENSATE FROM THE SHIFT SECTION AMOUNTS TO 1/3 OF THE FLOW.
3. MM = 1,000,000 BTU/HR.
4. MMSCFD @ 60° AND 14.7 PSIA.
5. GPM ARE AT FLOW CONDITIONS.
6. N.C. = NORMALLY CLOSED.
7. Ø = DIAMETER.
8. T-T = TANGENT TO TANGENT DISTANCE.

REV.	DATE						
1	7/13/81	ISSUED FOR PHASE 0					
0	10/8/81	ISSUED FOR REVIEW/APPROVAL					

BRECKINRIDGE PROJECT

PROCESS FLOW DIAGRAM
PLANT 12
GASIFICATION & PURIFICATION PLANT
12.2 SHIFT SECTION

14222 | 12-0-8-2 | 1

Figure 16
Sheet 1 of 3

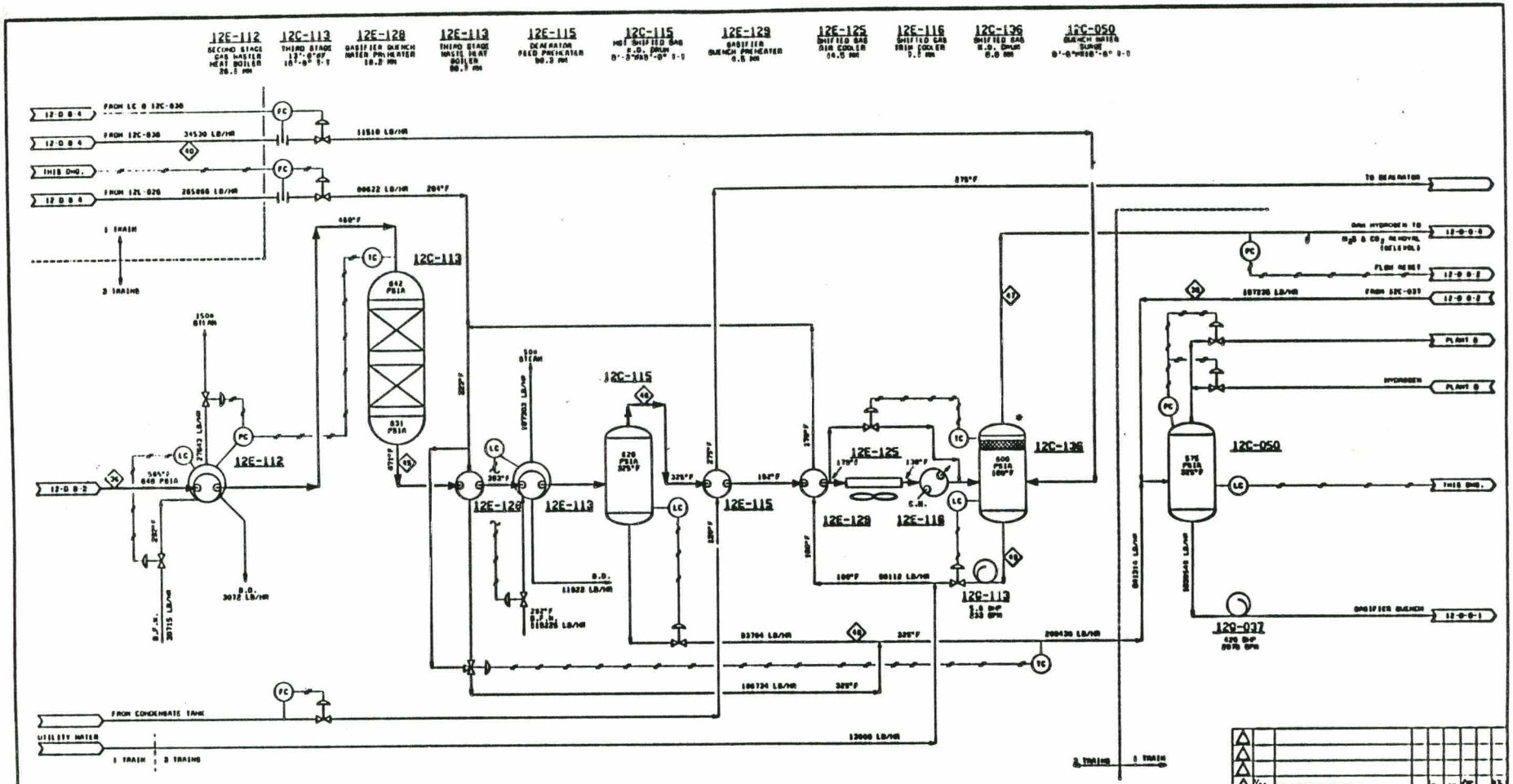

STREAM NO.	40	45	46	47	48	49
DESCRIPTION / COMPONENT	FUEL GAS COLD SEPARATOR LIQUID	THIRD STAGE EXIT	HOT SEPARATOR GAS	COLD SEPARATOR GAS	HOT SEPARATOR LIQUID	COLD SEPARATOR LIQUID
MMSCFD @ 60°F	189.1	257.1	209.6	172.6	1187.1	1170.1
MW (B.P. @ 60°F)	11.0006	18.28	16.58	16.58	11.0006	11.0006
LB/HR TOTAL	34530.	519317.	425613.	352012.	03704.	05112
COMPONENT MOLS/HR						
H2		11338.0	11338.0	11338.0		
CO		130.3	130.3	130.3		
CO2		7261.6	7261.6	7261.6		
H2O	1918.2	8320.5	4121.8	37.4	5190.0	4723.2
CH4		37.8	37.8	37.8		
H2S		70.8	70.8	70.8		
COS		0.10	0.10	0.10		
N2		67.6	67.6	67.6		
AR		15.4	15.4	15.4		
MW, LB/LB	1918.2	20230.9	23032.3	16947.0	5190.0	4723.2

NOTES:

1. STREAM NO. THROUGH 49 ARE 1/3 OF THE TOTAL FLOW. (1 TRAIN OUT OF 3)
2. THE CONDENSATE FROM THE SHIFT SECTION AMOUNTS TO 1/3 OF THE FLOW.
3. SOLUBILITY OF H_2S & CO_2 IN CONDENSATE WAS NEGLECTED FOR MATERIAL BALANCE CALCULATIONS.
4. MM = 1,000,000 BTU/HR.
5. MMSCFD @ 60°F AND 14.7 PSIA.
6. PUMP GPM ARE AT FLOW CONDITIONS.
7. NC = NORMALLY CLOSED OR EQUIVALENT NOTED FOR THE METRIC SYSTEM.
8. Ø = DIAMETER.
9. T-T = TANGENT TO TANGENT DISTANCE.

NO.	DATE	REVISIONS	BY	CHK	APP
1	7/26	ISSUED FOR PHASE B			
2	7/26	ISSUED FOR REVIEW/APPROVAL			

BRECKINRIDGE PROJECT

PROCESS FLOW DIAGRAM
PLANT 12
GASIFICATION & PURIFICATION PLANT
12.2 SHIFT SECTION

14222 | 12-D-B-3 | 1

Figure 16
Sheet 2 of 3

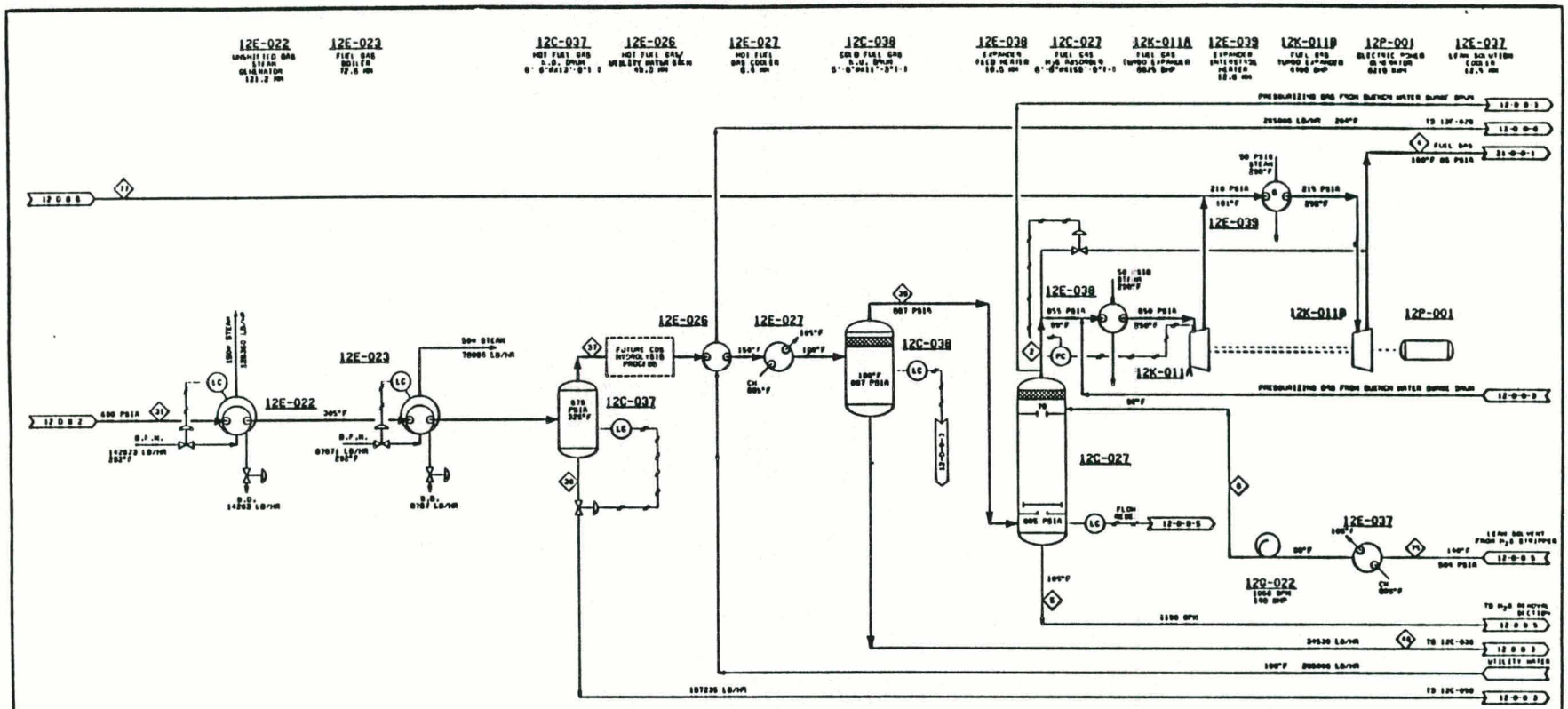

STREAM NO.	31	37	38	39	40	8	9	6	17	4
DESCRIPTION / COMPONENT	RAW GAS TO COOLING	HOT SEPARATOR FUEL GAS	HOT FUEL GAS SEP. LIQUID	COLD SEPARATOR FUEL GAS	COLD FUEL GAS SEP. LIQUID	DELUG-FUMIZED FUEL GAS	ABSORBER RICH SOLVENT	ABSORBER LEAN SOLVENT	H2S RICH GAS FROM SELEXOL	FUEL GAS TO PLANT DISTRIB.
MMSCFD (GPM @ 60°F)	211.1	211.5	7394.1	94.5	168.1	81.2	11180.1	11183.1	3.0	84.2
MW (S.G. @ 60°F)	18.48	18.33	11.00061	18.08	11.00061	18.35	11.02441	11.02441	38.78	18.48
LB/HR (GPM)	626462.	229227.	187295.	194697.	34520.	183458.	819296.	819559.	8362.	193250.
COMPONENT, MOLS/HR										
H2	4089.5	4089.5		4089.5		4072.6	17.0		110.5	4089.5
CO	5370.0	5370.0		5370.0		5280.2	46.5		2.33	5262.0
CO2	737.0	737.0		737.0		590.4	147.2		295.7	796.1
H2O	12875.5	1551.2	10915.2	18.0	1918.2		1155.2	1131.2	0.19	0.18
CH4	31.1	31.1		31.1		20.4	0.64		0.58	31.1
H2S	81.0	81.0		81.0		0.01	81.0	0.04		0.01
COS	3.0	3.0		3.0		2.0	1.0			2.0
N2	39.1	39.1		39.1		38.0	0.23		0.53	39.1
AR	12.1	12.1		12.1		12.0	0.07		0.18	12.0
SELEXOL							2060.0	2060.0		
MOL/HR	23182.1	12237.0	10915.2	10321.0	1918.2	10017.7	3561.1	3190.7	410.3	10313.5

NOTES:
1. MM = 1,000,000 BTU/HR
2. MMSCFD AT 60°F AND 14.7 PSIA
3. GPM ARE AT FLOW CONDITIONS
4. NC = NORMALLY CLOSED
5. Ø = DIAMETER
6. T-T = TANGENT TO TANGENT DISTANCE

ISSUED FOR PHASE B
ISSUED FOR REVIEW/APPROVAL

BRECKINRIDGE PROJECT

PROCESS FLOW DIAGRAM
PLANT 12 - GASIFICATION & PURIFICATION
FUEL GAS COOLING AND
12.2 TREATING SECTION

14222 | 12-D-B-4 | 1

Figure 16
Sheet 3 of 3

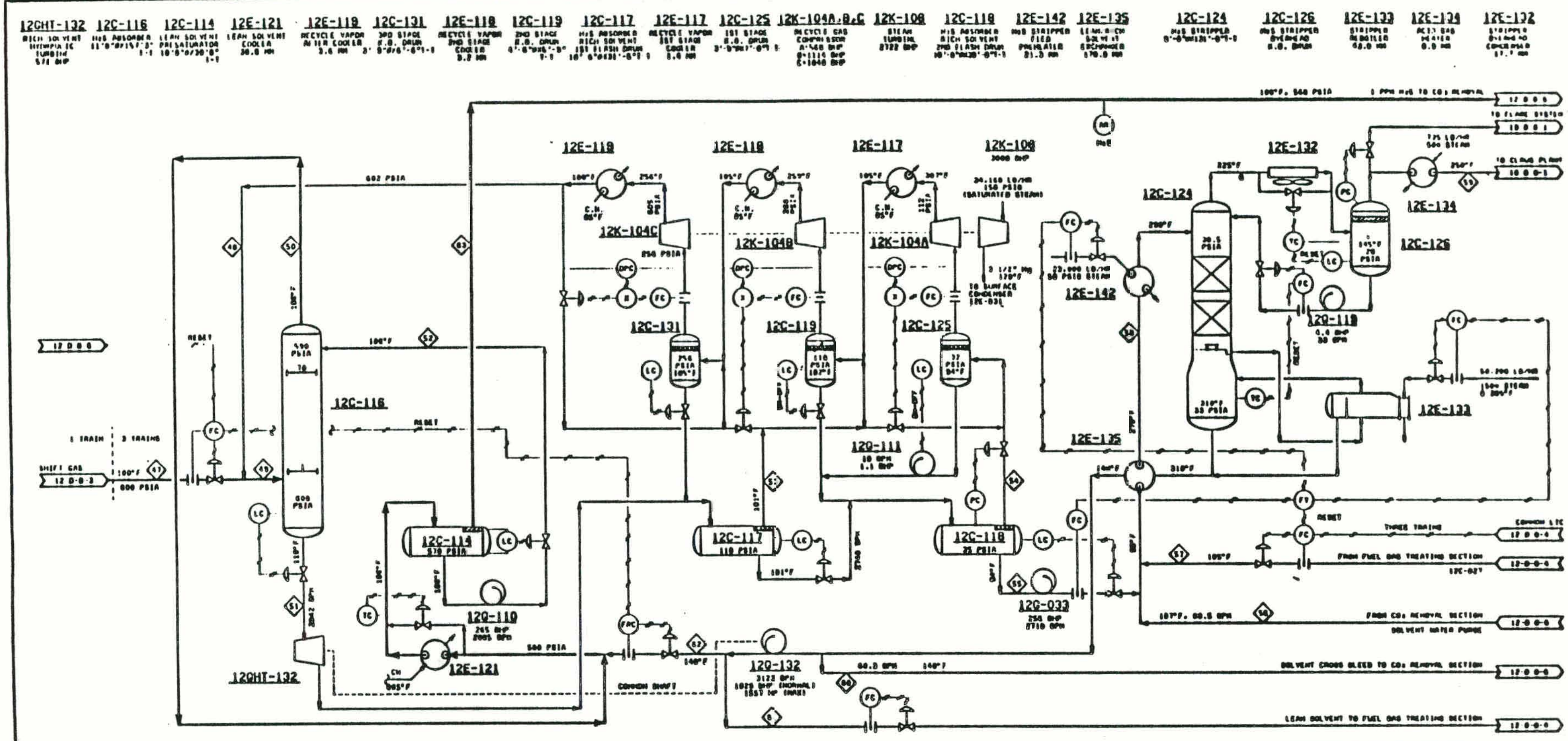

STREAM NO.	47	48	49	50	51	52	53	54
DESCRIPTION / COMPONENT	SHIFT GAS TO H2S ABSORBER	RECYCLE ABSORBER GAS	TOTAL FEED GAS TO ABSOR	OVHD GAS FROM H2S ABSORBER	H2S ABSOR RICH SOLVENT	LEAN SOLV TO H2S ABSORBER	FLASH GAS FROM 1ST STAGE	FLASH GAS FROM 2ND STAGE
MMSCFD (OPM @ 60°F)	172.0	10.0	190.6	185.9	12072.1	12022.1	11.5	8.8
MW (S.G. @ 60°F)	10.57	42.45	20.44	20.38	(1.0100)	(1.0141)	41.05	43.51
LBS/HR TOTAL	351000.	84100.	436100.	415700.	1452000.	1432402.	52048.	31413.
COMPONENT, MOLS/HR								
H2	11330.0	50.1	11386.5	11380.4	58.3	90.0	57.4	0.70
CO	130.3	1.5	131.8	131.0	1.5	1.8	1.5	0.03
CO2	7261.6	1063.6	9125.2	8782.4	3237.5	1096.7	1170.0	888.7
H2O	37.4	0.4	37.8		2502.3	2545.1	0.14	0.25
CH4	27.0	1.0	28.8	28.8	1.9	1.0	0.02	0.07
H2S	78.0	57.0	136.6	0.03	138.8	0.08	25.7	32.1
COS	0.10	0.05	0.15	0.11	0.07	0.04	0.03	0.02
N2	47.6	0.3	47.8	47.8	0.28	0.20	0.20	0.01
AR	15.4	0.2	15.8	15.8	0.00	0.00	0.00	0.00
SELEXOL					4653.7	4653.7		
MPH, TOTAL	18847.0	1903.0	20930.7	20410.0	8671.5	8157.3	1281.0	722.0

STREAM NO.	55	56	57	58	59	60	61	62	63
DESCRIPTION / COMPONENT	RICH SOLV FROM 2ND STAGE	LEAN SOLV H2O PURGE FROM CO2 REMOVAL	RICH SOLV FROM FUEL GAS ABSOR	TOTAL RICH SOLV TO H2S STRPPR	H2S RICH GAS FROM GAS HTR	LEAN SOLV H2O PURGE TO CO2 REMOVAL	LEAN SOLV TO FUEL GAS ABSOR	LEAN SOLV TO CO2 PRESAT'R	PRESAT'R FLASH OVHD TO CO2 REMOVAL
MMSCFD (OPM @ 60°F)	12665.1	169.51	1387.1	13131.1		160.31	1308.3	12617.1	188.1
MW (S.G. @ 60°F)	(1.0762)	(1.0792)	(1.0744)	(1.0760)	38.48	(1.0790)	(1.0790)	(1.0790)	10.00
LBS/HR TOTAL	1360641.	25022.	202470.	1007034.	83945.	35217.	188058.	1240090.	332240.
COMPONENT, MOLS/HR									
H2	0.15		5.7	5.05	5.05				11330.7
CO	0.01		16.2	16.2	16.2				130.3
CO2	372.6	0.27	52.6	425.3	425.3				8808.9
H2O	2502.5	98.4	303.1	3065.0	78.6	98.4	377.1	2545.1	
CH4	0.01		0.21	0.22	0.22				37.0
H2S	78.3		20.3	98.5	98.6		0.01	0.02	0.02
COS	0.02		0.01	0.03	0.43				0.07
N2	0.01		0.06	0.07	0.07				47.8
AR	0.00		0.04	0.04	0.04				15.5
SELEXOL	4653.7	121.5	808.5	5464.7		121.5	808.5	4653.7	
MPH, TOTAL	7607.3	221.2	1188.1	9076.6	623.3	187.8	1066.0	7198.0	18458.0

NOTES:

1. MATERIAL FLOW FOR A SINGLE TRAIN.
2. A TOTAL OF 3 TRAINS REQUIRED.
3. MM = 1,000,000 BTU/HR.
4. MMSCFD @ 60°F AND 14.7 PSIA.
5. GPM ARE AT FLOW CONDITIONS.
6. N.C. = NORMALLY CLOSED.
7. Ø = DIAMETER.
8. T-T = TANGENT TO TANGENT DISTANCE.

⚠	ISSUED FOR PHASE 0	
⚠	ISSUED FOR REVIEW/APPROVAL	

BRECKINRIDGE PROJECT

12.3 PROCESS FLOW DIAGRAM
PLANT 12
GASIFICATION & PURIFICATION
SELEXOL H2S REMOVAL SECTION

14222	12-D-8-5	1

Figure 17
Sheet 1 of 2

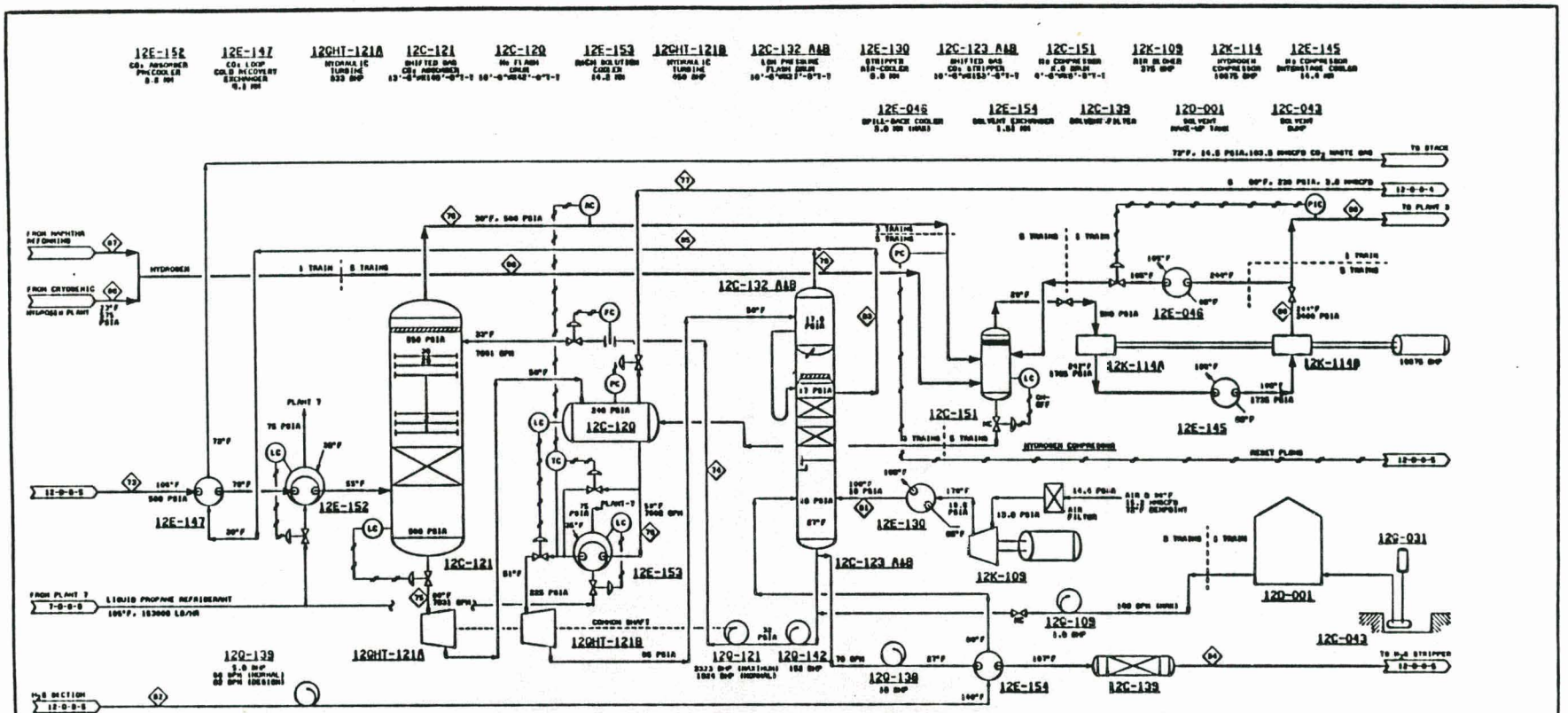

STREAM NO. / DESCRIPTION	73 FEED GAS FROM H2S ABSORBER	74 LEAN SOLV TO CO2 ABSORBER	75 RICH SOLV FROM CO2 ABSORBER	76 H2 GAS PRODUCT TO COMP	77 H2 FLASH GAS TO FUEL GAS	78 RICH SOLV FROM H2 FLASH	79 LP FLASH CO2 WASTE GAS	80 LP FLASH SOLV TO CO2 STPR	81 AIR TO CO2 STRIPPER	82 LEAN SOLV H2O PURGE FROM H2S REMOVAL	83 CO2 STRIPPER OFF GAS	84 LEAN SOLV H2O PURGE TO H2S REMOVAL	85 TOTAL CO2 WASTE GAS TO ATM	86 H2 FROM CRYOGENIC PURIF.	87 H2 FROM NAPHTHA REFORMING	88 ONE TRAIN CRYO/REFR H2 TOTAL	89 COMPR H2 PRODUCT	90 TOTAL H2 TO PLANT 3
COMPONENT																		
MMSCFD 60°F 900LB/IN²	160.1	1001.1	1161.1	104.1	3.0	1202.1	53.0	1117.1	42.0	100.21	49.0	149.51	103.5	275.7	0.3	50.0	136.0	517.0
MM 15.6, 0 BOK°F	18.00	11.02522	11.00521	7.58	20.78	11.01041	43.63	11.02601	20.00	11.0291	31.00	11.07521	37.61	3.05	3.38	3.04	3.04	3.06
LBS/HR TOTAL	332240.	2653010.	2985720.	20560.	8282.	2840330.	251941.	2680390.	134603.	25211.	109620.	25423.	423231.	8050.	3445.	23483.	45610.	137500.
COMPONENT, MOLS/HR																		
H2	21330.7		155.2	11104.6	118.4	37.6	37.3	0.04			0.04		37.3	23201.0	874.0	8044.0	16432.4	33376.0
CO	130.3		4.00	126.2	2.33	1.35	1.35						1.35	848.0		182.1	254.0	1027.2
CO2	8800.0	26.0	8682.0	22.0	205.7	8647.2	8647.0	839.4	1.37		813.3	0.23	8461.5				17.2	88.0
H2O		10136.3	10136.1		0.10	10136.0	22.0	10113.0	123.2	88.4	0.2	88.4	88.1					
C1	27.0		2.00	25.0	0.00	1.03	1.02	0.01			0.01		1.03	218.0	18.5	58.0	84.2	330.0
C2+															1.03	0.37	0.23	1.00
C2															21.5	5.30	5.30	21.52
C3+															0.17	0.04	0.04	0.16
C3															0.03	0.01	0.01	0.04
C4+															0.20	0.01	0.01	0.20
C4															2.31	0.58	0.58	2.32
H2S															0.50	0.13	0.13	0.52
H2O	0.02		0.02			0.02	0.01	0.01			0.01		0.02					
COS	0.07		0.07			0.07	0.05	0.02			0.02		0.07					
N2	47.6		0.13	46.0	0.53	0.20	0.20		2567.0		2567.0		2568.1	119.1		129.0	105.0	960.0
AR	15.5		0.24	15.2	0.10	0.00	0.00		43.0		43.0		43.1	160.0		42.2	33.7	216.0
O2									950.0		950.0		950.0					
SELEXOL		12290.0	12290.0			12290.0		12290.0		121.5		121.5						
MPH, TOTAL	10450.0	27552.0	29581.2	11430.3	326.3	28255.0	5013.4	23242.0	4695.3	167.0	5461.7	221.2	11304.1	24753.0	1825.2	8444.0	15017.0	40871.2

NOTES:

1. MATERIAL BALANCE FOR A SINGLE SELEXOL TRAIN OUT OF THREE TRAINS.
2. MATERIAL BALANCE FOR A SINGLE GAS COMPRESSION OUT OF FOUR TRAINS. SIX SIX SPARE TRAIN.
3. MM = 1,000,000 BTU/HR.
4. MMSCFD @ 60°F AND 14.7 PSIA.
5. GPM ARE AT FLOW CONDITIONS.
6. NC = NORMALLY CLOSED.
7. Ø = DIAMETER.
8. T-T = TANGENT TO TANGENT DISTANCE.

3		
2	ISSUED FOR PHASE B	
1	ISSUED FOR REVIEW/APPROVAL	

BRECKINRIDGE PROJECT

12.3 PROCESS FLOW DIAGRAM
PLANT 12
SELEXOL GAS PURIFICATION
CO_2 REMOVAL AND H_2 COMPRESSION

14222	12-D-8-8	1

Figure 17
Sheet 2 of 2

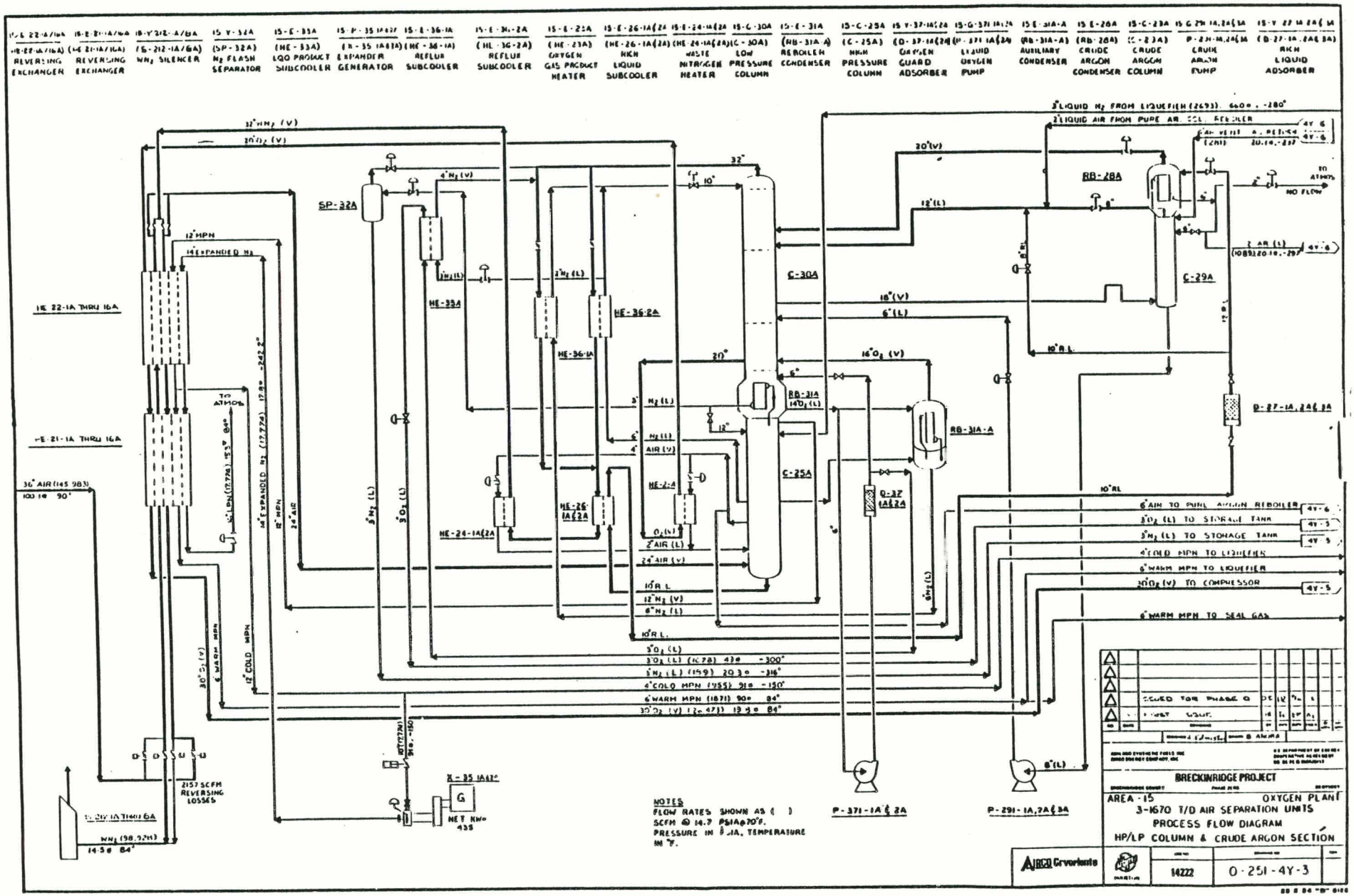

Figure 18
Sheet 1 of 3

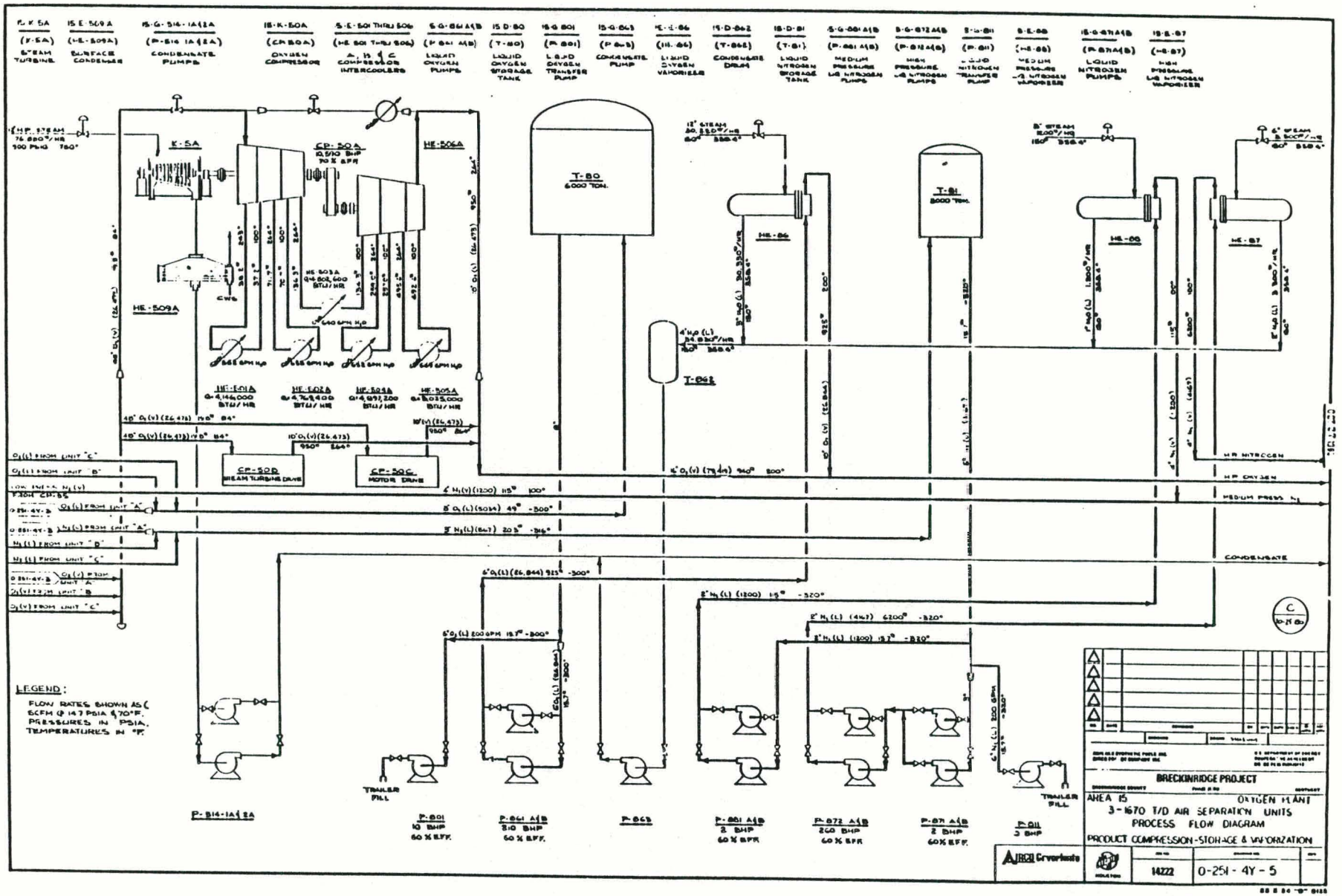

Figure 18
Sheet 2 of 3

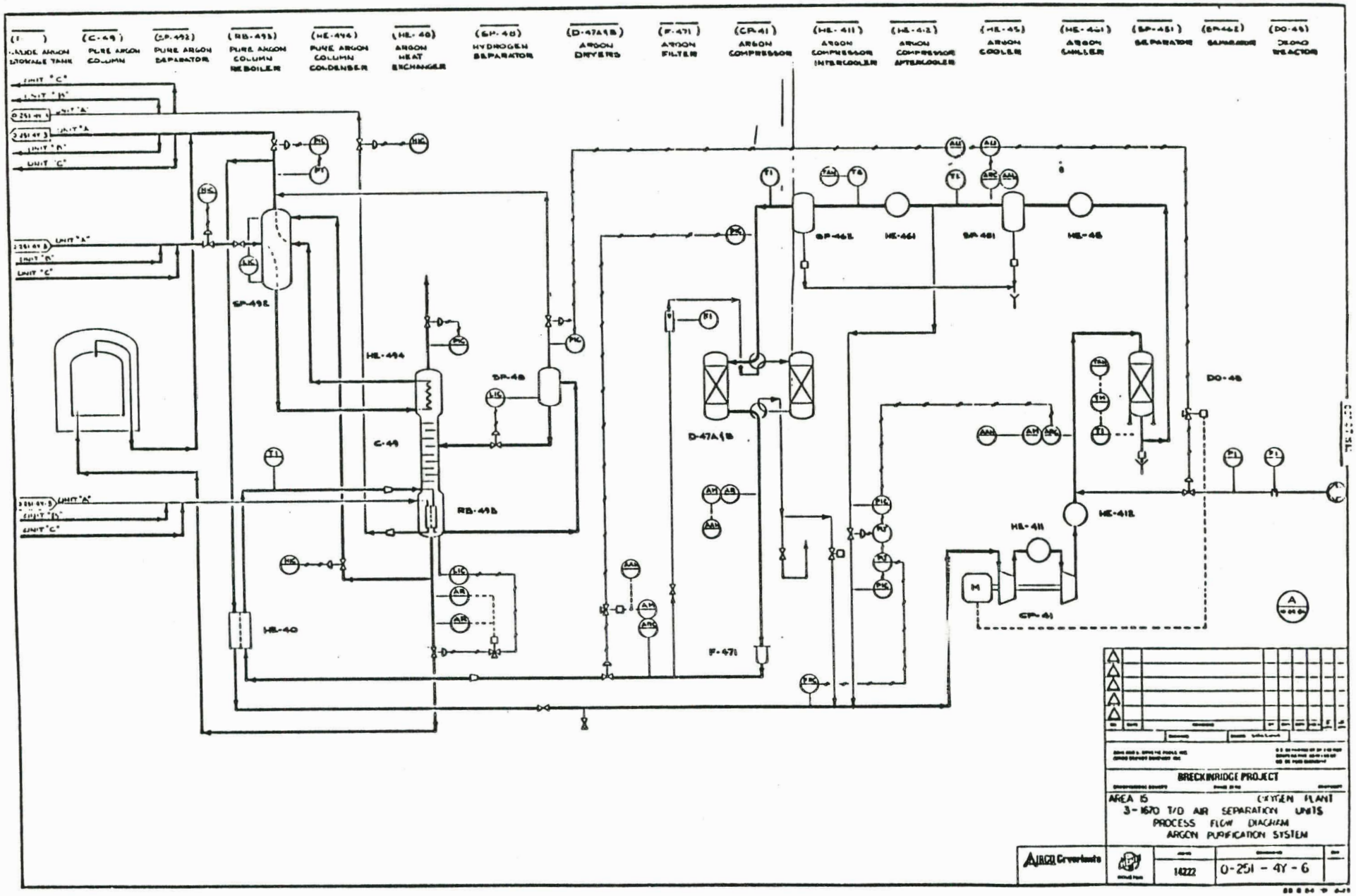

Figure 18
Sheet 3 of 3

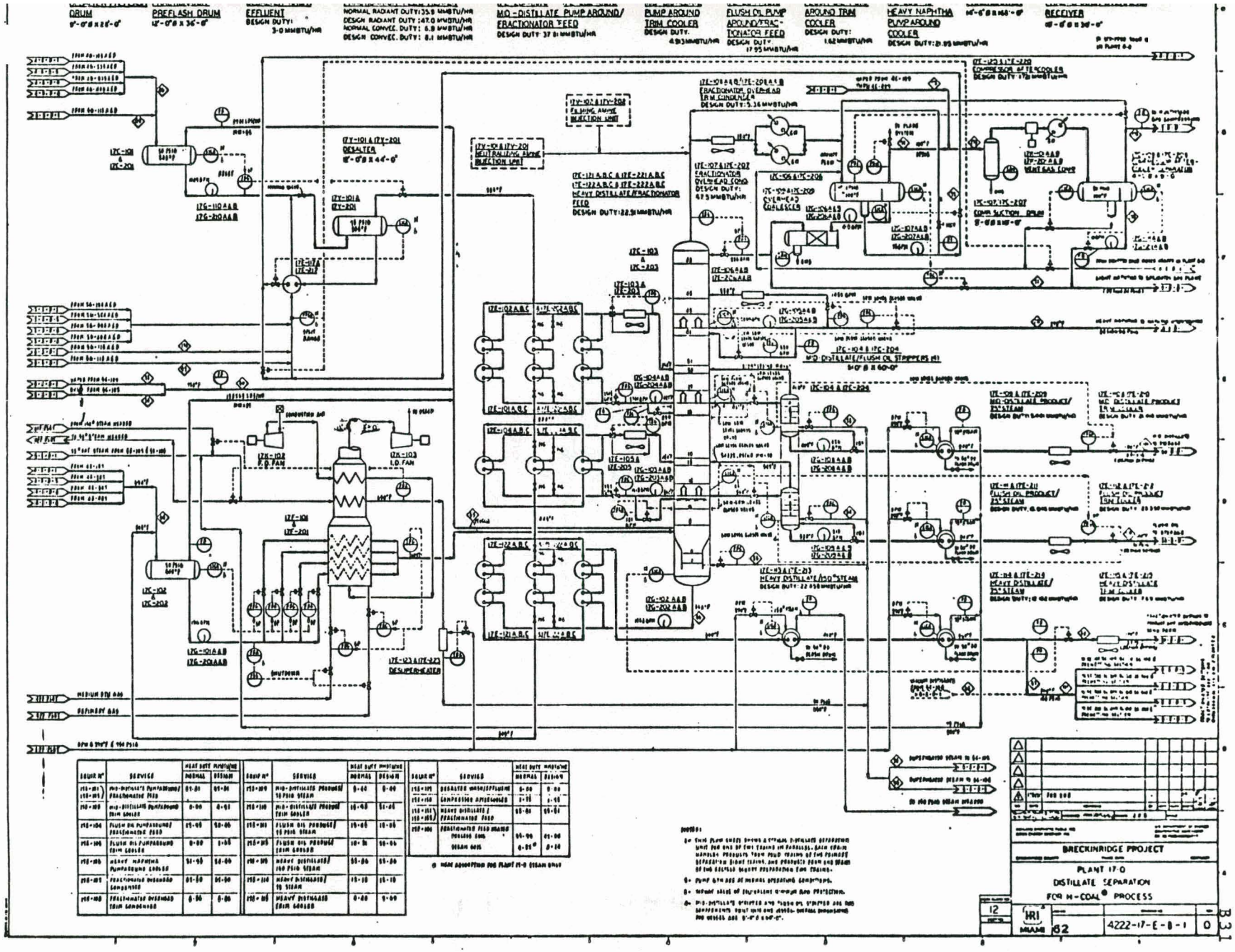

EQUIP Nº	SERVICE	HEAT DUTY MMBTU/HR NORMAL	HEAT DUTY MMBTU/HR DESIGN
17E-101 / 17E-201	MID-DISTILLATE PUMPAROUND/ FRACTIONATOR FEED	21.01	21.01
17E-102	MID-DISTILLATE PUMPAROUND TRIM COOLER	0.00	0.01
17E-104	FLUSH OIL PUMPAROUND/ FRACTIONATOR FEED	25.00	30.00
17E-105	FLUSH OIL PUMPAROUND TRIM COOLER	0.00	3.00
17E-106	HEAVY NAPHTHA PUMPAROUND COOLER	21.00	24.00
17E-107	FRACTIONATOR OVERHEAD COMPRESSOR	21.00	24.00
17E-108	FRACTIONATOR OVERHEAD TRIM CONDENSER	0.00	0.00

EQUIP Nº	SERVICE	HEAT DUTY MMBTU/HR NORMAL	HEAT DUTY MMBTU/HR DESIGN
17E-109	MID-DISTILLATE PRODUCT/ TO FUEL STEAM	0.00	0.00
17E-110	MID-DISTILLATE PRODUCT TRIM COOLER	10.00	21.00
17E-111	FLUSH OIL PRODUCT/ TO FUEL STEAM	19.00	19.00
17E-112	FLUSH OIL PRODUCT TRIM COOLER	10.00	10.00
17E-113	HEAVY DISTILLATE/ TO FUEL STEAM	33.00	33.00
17E-114	HEAVY DISTILLATE/ TO STEAM	15.10	15.10
17E-115	HEAVY DISTILLATE TRIM COOLER	0.00	0.00

EQUIP Nº	SERVICE	HEAT DUTY MMBTU/HR NORMAL	HEAT DUTY MMBTU/HR DESIGN
17E-116	DESALTER WASH/EFFLUENT	0.00	0.00
17E-117	COMPRESSOR AFTERCOOLER	1.11	1.00
17E-118 / 17E-218	HEAVY DISTILLATE / FRACTIONATOR FEED	23.01	23.01
17E-119	FRACTIONATOR FEED HEATER PROCESS SIDE	24.00	21.00
	DESIGN DUTY	4.21*	8.10

* HEAT ABSORPTION FOR PLANT 17-0 DESIGN ONLY

NOTES:

1. THIS FLOW SHEET SHOWS A TYPICAL DISTILLATE SEPARATION UNIT FOR ONE OF TWO TRAINS IN PARALLEL. EACH TRAIN HANDLES PRODUCTS FROM FOUR TRAINS OF THE PRIMARY SEPARATION DISTILLATION, AND PRODUCES FROM ONE HALF OF THE SECTION HEAVY DISTILLATE FOR TRAINS.
2. PUMP SETS ARE AT MINIMUM OPERATING CONDITIONS.
3. HEAVY DISTILLATE OVERHEAD AND PRODUCTION.
4. MID-DISTILLATE STRIPPER AND FLUSH OIL ARE ONE DESIGNED TOWER UNIT AND HAVE SHELL DIAMETERS AND VESSEL ARE 8'-0" & 60'-0".

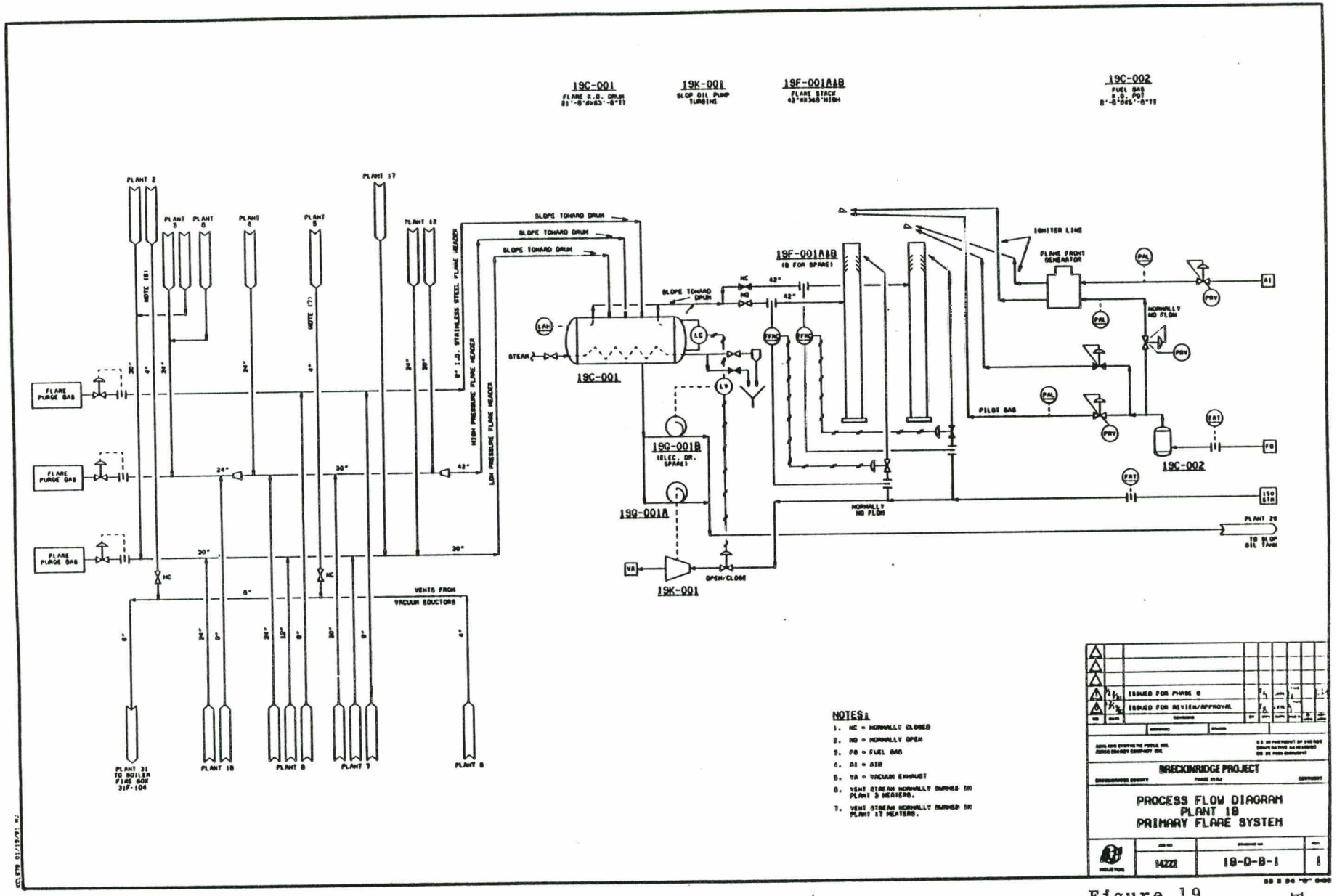

NOTES:

1. NC = NORMALLY CLOSED
2. NO = NORMALLY OPEN
3. FG = FUEL GAS
4. AI = AIR
5. VA = VACUUM EXHAUST
6. VENT STREAM NORMALLY BURNED IN PLANT 5 HEATERS.
7. VENT STREAM NORMALLY BURNED IN PLANT 17 HEATERS.

Figure 19
Sheet 1 of 2

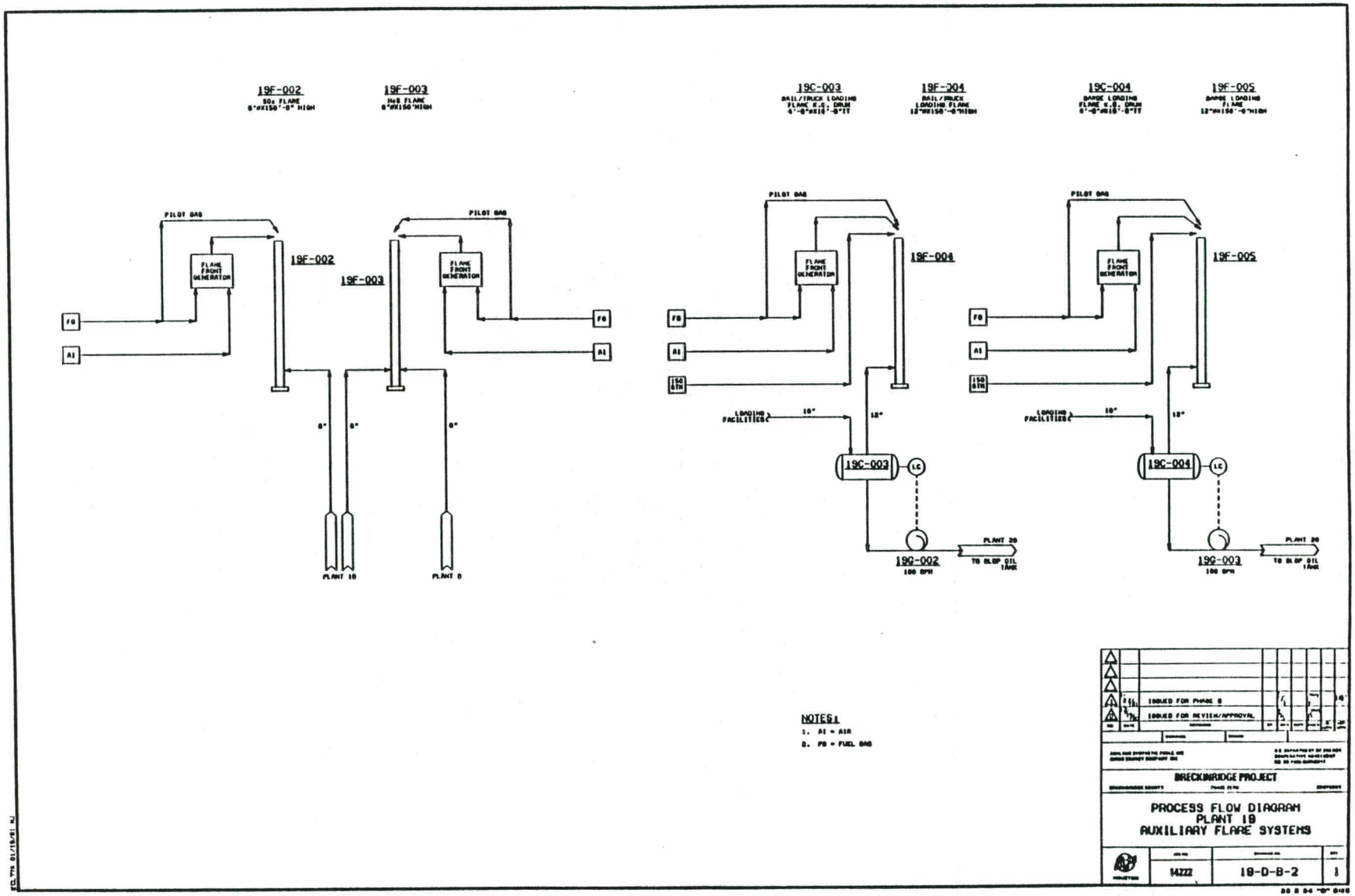

Figure 19
Sheet 2 of 2

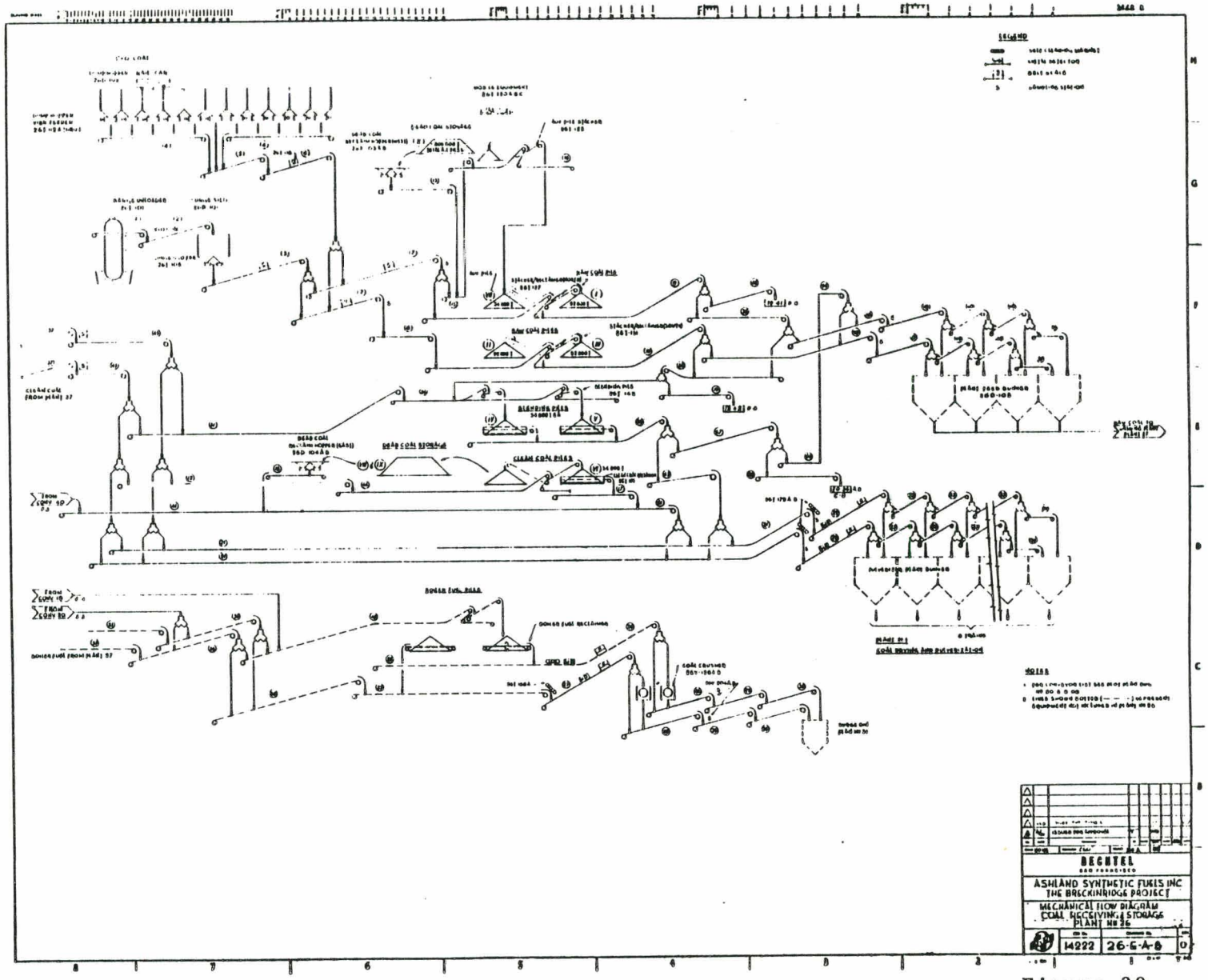
BECHTEL
ASHLAND SYNTHETIC FUELS INC
THE BRECKINRIDGE PROJECT
MECHANICAL FLOW DIAGRAM
COAL RECEIVING & STORAGE
PLANT NO 26
14222
26-6-A-8

Figure 20

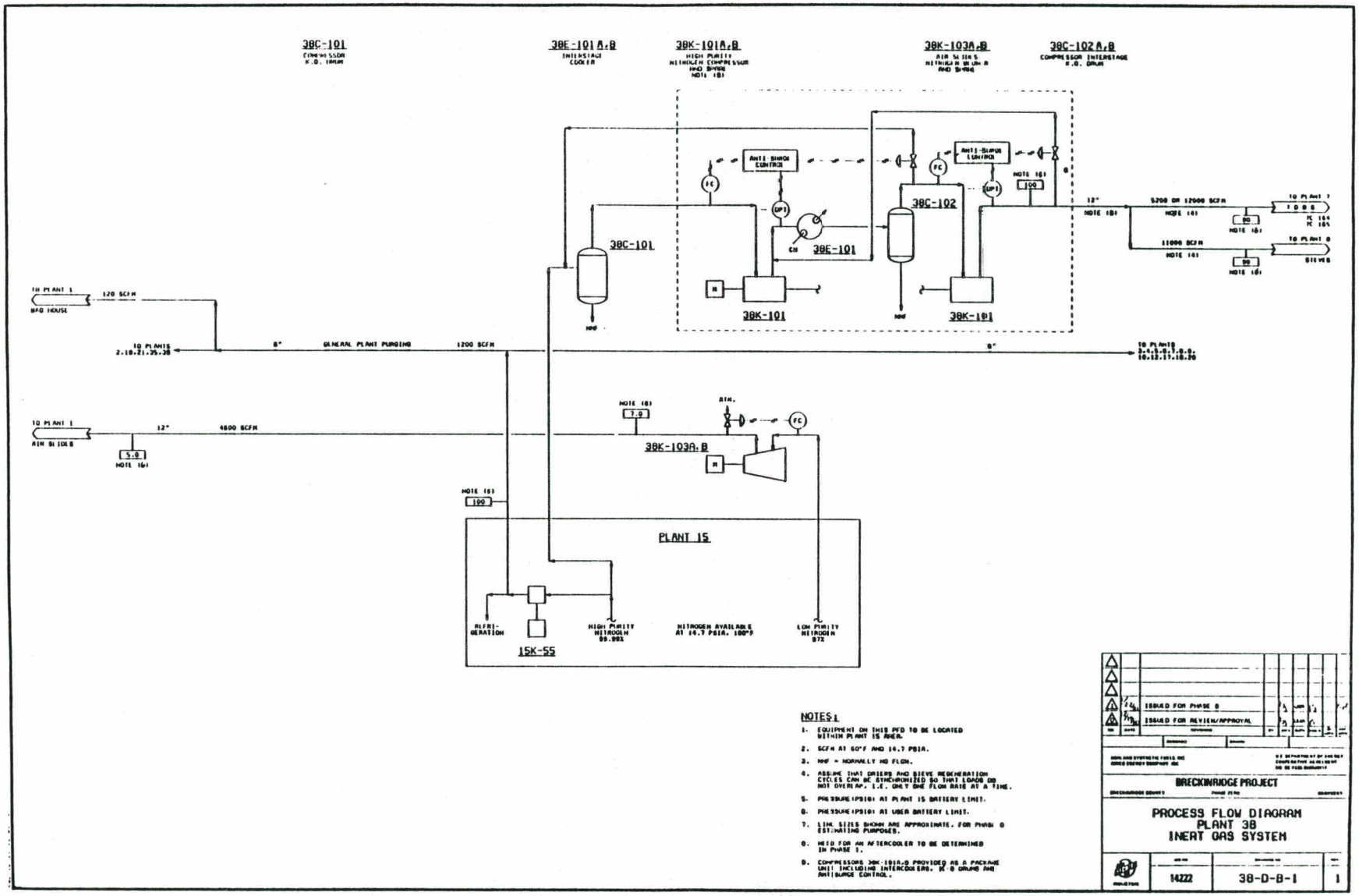

NOTES:

1. EQUIPMENT ON THIS PFD TO BE LOCATED WITHIN PLANT 15 AREA.
2. SCFM AT 60°F AND 14.7 PSIA.
3. NNF = NORMALLY NO FLOW.
4. ASSUME THAT DRYERS AND SIEVE REGENERATION CYCLES CAN BE SYNCHRONIZED SO THAT LOADS DO NOT OVERLAP, I.E. ONLY ONE FLOW RATE AT A TIME.
5. PRESSURE(PSIG) AT PLANT 15 BATTERY LIMIT.
6. PRESSURE(PSIG) AT USER BATTERY LIMIT.
7. LINE SIZES SHOWN ARE APPROXIMATE. FOR PHASE 0 ESTIMATING PURPOSES.
8. NEED FOR AN AFTERCOOLER TO BE DETERMINED IN PHASE 1.
9. COMPRESSORS 38K-101A,B PROVIDED AS A PACKAGE UNIT INCLUDING INTERCOOLERS, K.O. DRUMS AND ANTISURGE CONTROL.

2	2/24/84	ISSUED FOR PHASE 0
1	2/9/84	ISSUED FOR REVIEW/APPROVAL

BRECKINRIDGE PROJECT

PROCESS FLOW DIAGRAM
PLANT 38
INERT GAS SYSTEM

14222 | 38-D-B-1 | 1

B35

APPENDIX C

METHODOLOGY

Methodology

The analytical method used for estimating the pertinent reliability and availability factors in this study is outlined below, and is based on statistical methods presented in various standard texts on system reliability (1)(2)(3)(4)(5).

Definitions

A system is a collection of interacting components arranged in some sequence. A "series" component is one whose failure causes the system to fail (partially or totally). A "parallel" component is one whose failure causes the system to fail (partially or totally), if and only if such failure is coincident with the failure of a prespecified number of other "parallel" components. A "parallel" set is a collection of "parallel" components so arranged that the set, and hence the system, fails if and only if all the components of the set fail. A "null" component is one whose failure has no bearing on the state of the system. In the analysis that follows "null" components are ignored.

Analytical Analysis of a System

Let the series components be designated by x_i (where i designates the series component number, i - 1, 2...., r) and the parallel set components by y_{jk} (where j designates the parallel set number j = 1, 2...., s; and K designates the parallel component number of the specified set, k = 1, 2...., t). For simplicity, it will be assumed that y_{jk} is a single component, although in

practice it could be composed of a number of components in series. A typical system might look something like:

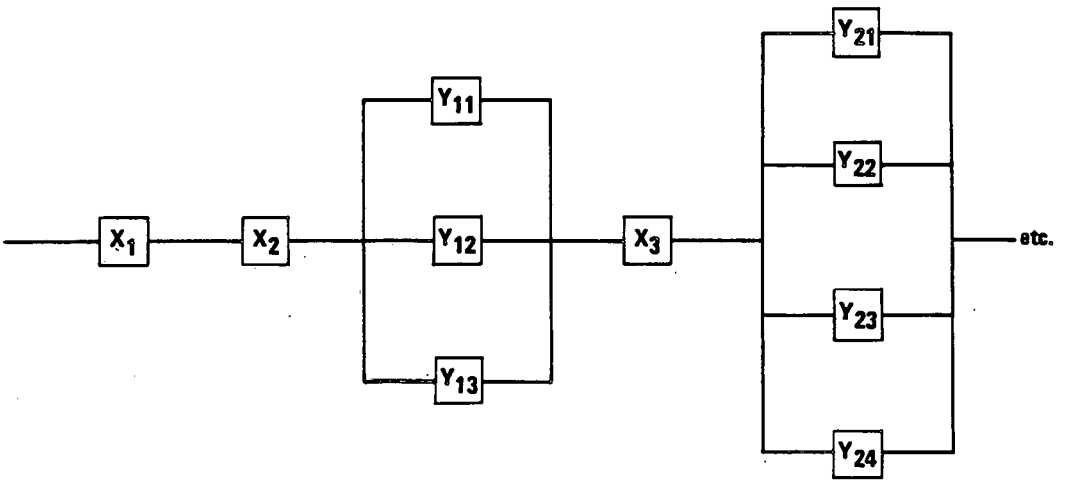

Let P_i = the probability of x_i being operable.

P_{jk} = the probability of y_{jk} being operable.

P_s = the probability of the system (composed of x_i's and Y_{jk}'s) being operable.

Then it can be shown that:

$$P_s = \left(\prod_{i=1}^{r} P_i\right)\left[\prod_{j=1}^{s}\left(1-\prod_{k=1}^{t}(1-P_{jk})\right)\right]$$

Since in practically all cases, the components in each parallel set are the same (e.g., spare pumps or the like) the probabilities of their running are equal, (i.e., P_{jk} are all the same for a given parallel set $_j$). Then equation (1) becomes:

$$P_s = \left(\prod_{i-1}^{r} P_i\right) \times \left[\prod_{j=1}^{s} \left(1 - (1-P_{jk})^t\right)\right]$$

The most convenient and applicable expressions for P_i and P_{jk} are based on the assumption that the a priori ods of a component failing or not failing is constant throughout its useful life. (This is similar to the case where the probability of tossing a coin to show a head is 1/2). The assumption of constant probability of failure (or success) is reasonable for the case where the system is well maintained and operable. It corresponds roughly to the flat part of the typical mortality curve for equipment observed by the process industry (1)(3)(4).

Mortality Rate - % per year

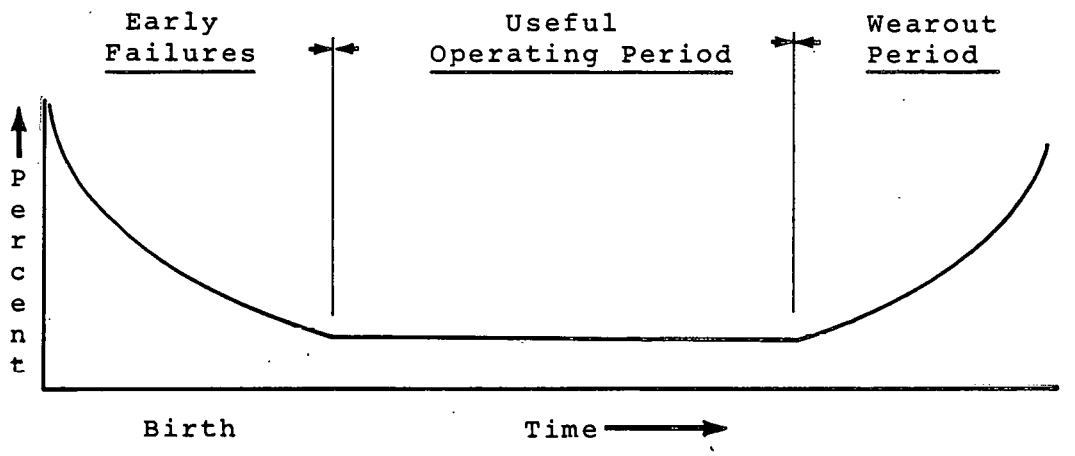

This analysis is therefore based on expected experience after the plant (system) has been debugged; that is, after start-up and all the latent equipment or installation defects have been deleted and corrected. Additionally, it is based on good maintenance practice including preventive maintenance and external, on-the-run equipment testing, and on reasonably steady and intelligent operation.

In the case where the probability of an event occurring is significant and the number of trials is limited, the probability of r events (for example) occurring in n trials is rigorously given by the Binomial Distribution Law.

$$P(r;n) = \underset{(r)}{n}\, p^r(1-p)^{n-r} = \frac{n!}{r!(n-r)!}\, p^r(1-p)^{n-r}$$

where

p = a priori probability of a single event occurring.

n = Number of trials (viz, tosses of a coin).

r = Number of events (viz, tosses showing heads).

$P(r;n)$ = Probability of r events out of n trials (viz, r heads in n tosses).

In applying this to a system reliability evaluation, two situations pertain. The odds of a single component failure occurring is small, and the number of trials (instances when a failure can occur) is large. Under these conditions, the Binomial Distribution Law reduces to the Poisson Distribution.

$$P(r;n) = \frac{p^r e^{-pn}}{r!}$$

If P, the probability of a failure, is expressed as failures per hour, the n would be expressed as hours. Any other consistent set of units can be used.

Reliability of the System

The basic question asked of the reliability analysis is "what is the probability that the system, and hence all of its non-null series components and non-null parallel sets, will operate for t consecutive hours with failure?" This probability applied to each component, will be that for $n = t$ and $r = 0$ in equation (4), or

$$P(t_o) = e^{-\lambda t_o} \tag{5}$$

where: λ is the mean frequency of failure per unit time (e.g., hours); t_o is the time (in the same units, hours, as used for λ) and

$P(t_o)$ is the probability

that that component will operate t_o (hours) without failure.

Applying equation (5) to equation (1), and designating λ_i for the mean failure - frequency rate of series component i, and λ_{jk} for the mean failure - frequency rate of parallel component jk, gives:

$$P_s(t_o) = \left(\prod_{i=1}^{r} e^{-\lambda_i t_o}\right) \left[\prod_{j=1}^{s} \left(1 - \prod_{k=1}^{t} (i-e^{-\lambda_{jk} t_o})\right)\right] \tag{6}$$

The terms in the brackets represent the contribution of the parallel sets. As a first approximation, these can be changed to the more convenient form of:

$$\prod_{j=1}^{s} \left[1 - \prod_{k=1}^{t} (1-e^{-\lambda_{jk} t_o})\right] = \exp\left(-(\lambda' + \mu t_o) t_o\right) \tag{7}$$

where λ' and μ are suitable constants, and the term $\lambda' + \mu t_o$ is the average failure rate of all the parallel sets at time t_o. Substituting equation (7) in equation (6) and simplifying, yield:

$$P_s(t_o) = \exp\left(-t_o \sum_{i=1}^{r} \lambda Z\right) \times \exp\left(-(\lambda' + \mu t_o)t_o\right)$$

or

$$P_s(t_o) = \exp\left\{-\left(\lambda + \sum_{i=1}^{r} \lambda_i + \mu t_o\right)t_o\right\} \qquad (8)$$

This expresses the probability of the system operating t_o (hours) without interruption. Hence this equation measures the reliability of the system for any specified continuous operating time.

The term $(\lambda + \sum_{i=1} \lambda_i + \mu t_o)$ represents the average failure rate of the system at time t_o.

Availability of the System

Equally important is knowledge as to the expected availability of the system. There are two measures of availability:

- On-Stream Factor expressed as a fraction is the operating time divided by the available time.
- Production Factor expressed as a fraction is the expected actual production during the available time divied by the design (or capacity) production during the same time period.

In the event of failure of a series component or a parallel set, there will be an operating outage equal to the time either to repair the failed component or set or to activate the standby or back-up facility.

For all the events, in the long run the average time to bring the system back into operation will be weighted repair time of all the components, using as weighting factors for each component or set, the probability of failure of that component or parallel set. Expressed otherwise,

$$t_r = \text{Average repair time} = \frac{\text{weighted sum of all the repair time for each component and each set}}{\text{sum of all the weighting factors}}$$

Or, expressed in mathematical terms:

$$t_r = \frac{\sum_{i=1}^{r} (1-P_L)R_L + \sum_{j=1}^{s} \left[\prod_{k=1}^{t} (1-P_{jk}) \sum_{k=1}^{t} R_{jk} \right]}{\sum_{i=1}^{r} (1-P_L) + \sum_{j=1}^{s} \left[\prod_{k=1}^{t} (1-P_{jk}) \right]}$$

where: R_i = repair time for series component i (i = 1,2....r)

R_{jk}= repair time for parallel set j (j = 1,2,....,s) which is equal to the sum of the repair times of all the components (k) in that set (k = 1,2,....,t).

$1 - P_i$ = weighting factor for the repair time, R_j, of series component i = probability that series component i fails = 1 - probability that component i runs.

$\prod_{k=1}^{t} (1-P_{jk})$ = weighting factor for the repair time of parallel set j = probability that parallel set j fails = probability that all the components in that set fail simultaneously = product of the probabilities that each component of the set fails.

Combining equations (4) and (6) gives the following equation which relates the average repair time t_r to the expected operating time t_o:

$$t_r = \frac{\sum_{i=1}^{r} (1-e^{-\lambda_i t_o}) R_i + \sum_{j=1}^{s} \left[\prod_{k=1}^{t} (1-e^{-\lambda_{jr} t_o}\right]\left[\sum_{r=1}^{t} R_{jk}\right]}{\sum_{i=1}^{r} (1-e^{-\lambda_i t_o}) + \sum_{j=1}^{s} \left[\prod_{r=1}^{t} (-e^{-\lambda_{jr} t_o}\right]} \qquad (8)$$

The total average downtime ($\overline{T}_R$) in any operating period will be the product of the average number of failures ($\overline{N}_f$) in that operating period and the average repair time (t_r). That is:

(Total Average Downtime) = (Average Number of failures) x (Average Repair Time per failure)

or

$$\overline{T}_R + \overline{N}_f \times t_r \qquad (9)$$

The average number of failures ($\overline{N}_f$) in an operating period (t) will be the product of the average failure frequency rate (λ) and the length of the operating period (t). That is:

(Average Number of failures) = (Average Failure Rate Failures/hour) x (Operating Period, hour)

or

$$\overline{N}_f = \lambda t \tag{10}$$

Combining equations (9) and (10) give:

$$\overline{T}_r = t\ t_r \tag{11}$$

The useful operating time (t_o) for this condition will be the total operating period less the time lost for repairs. Hence

$$t_o = t - \overline{T}_r \tag{12}$$

The average fraction of the time the system will operate is the average on stream factor which by definition is the operating time divided by total time, or

$$f = \frac{t_o}{t} \tag{13}$$

Combining this with equation (12) and then equation (11), gives

$$\frac{t - \overline{T}_r}{t} = \frac{t - t\ t_r}{t}$$

$$f = 1 - \lambda t_r \tag{14}$$

Note this equation implies that the average on-stream factor is only dependent on the average failure rate and the average repair time. It is hence constant.

Application to Composite System

Let F denote the composit output of the system as a fraction of the capacity of the system and E(F) denote the expectancy of achieving this output. Let the enters system be composed; M - components (areas). If F_i denotes the output of the ith component, as a fraction of total capacity, then

$$F - \min [F_i] \qquad i = 1,2....,m$$

If all components are in series and are independent of each other, and if P_i is the probability that the ith area is operating at a given time, then

$$E(F) = P_1 \times P_2 \times .... \times P_m$$

If any one area fails, then F = 0.

An alternate to consider is where each area (1) is divided into N_i parallel lines. In general, consider N_1 - lines in area (component 1, N_2 - lines in area 2, etc. Also, one can consider varying degrees of over capacity for each area; that can be designated by K_1, K_2,....,K_m respectively for areas 1, 2, ..., m, where K_i is greater than or equal to 1.

The possible values which F may take on are:

$$0,\ \frac{K_1}{n_1},\ \frac{2K_1}{n_1}\ \ldots,\ \frac{(n_1-1)K_1}{n_1},\ 1,\ \frac{K_2}{n_2},\ \frac{2K_2}{n_2}\ \ldots,\ \frac{(n_2-1)K_2}{n_2},$$

$$\ldots,\ \frac{k_m}{n_m},\ \frac{2k_m}{n_m},\ \ldots,\ \frac{(n_m-1)K_m}{n_m}$$

Obviously, the number of different combinations can become quite large. This number can be considerably reduced by choosing the N_i so that they are all equal or are multiples of some selected number (not 1). Additionally, this could minimize wasted capacity of lines as illustrated in the sample calculations.

The procedure in handling these networks or systems is:

- o Enumerate all modes of failure for each area
- o Enumerate all the combinations of failure for the system
- o Assign a capacity for each failure mode
- o Evaluate the expected mean capacity of the system from:

$$E(F) = \sum_{i=1}^{m} \sum_{o<\underline{a}<\underline{n}_i} \frac{aK_i}{n_i} P(F = \frac{a}{n_i})$$

where $E(F)$ = expected capacity

K_i = the over capacity of area i

n_i = number of parallel lines in area i

a = number of parallel lines running, in the summation a takes on all values between 0 and n_i (for each area).

$P(F=\frac{a}{n_i})$ = probability that a parallel units will operate out of n_i in area i.

EFFECT OF NUMBER OF LINES ON SYSTEM AVAILABILITY

Assume the system consists of a number (n) of parallel lines, and there is no cross-connection between the lines (manifolding) except possibly at the beginning or the end. Under these conditions, all the components of each line have to operate in order for that line to operate and produce. The probability of this occurring is equal to the product of the probabilities of each component in the line remaining. Let the probability of the line running at any time be P. The probability that r lines will run out of the n total lines is then, from the Binominal Distribution Law,

$$P(n;r) = \binom{n}{r} P^r (1-P)^{n-r} = \frac{n!}{r!(n-r)!} P^r (1-P)^{n-r}$$

The fraction of the production capacity for this condition will be r/n, and the production expectancy from these r operating lines will be

$$F(n;r) = \frac{r}{n} P(N'r) = \frac{r}{n} \times \frac{n!}{r!(n-r)!} P^r (1-P)^{n-r}$$

The total production expectancy for the system will be the sum of all the production expectancies for all the possible r's (r = o,1,2,....,n), or

$$F(n) = \sum_{r=o}^{n} F(n;r)$$

$$= \sum_{r=o}^{n} \frac{r}{n!} \frac{n!}{r!(n-r)!} P^{r}(1-P)^{n-r}$$

$$= \sum_{r=o}^{n} \frac{(n-1)}{(r-1)!(n-1)-(r-1)!} P^{r}(1-P)^{[(n-1)-(r-1)]}$$

$$= P\left[\sum_{R=O}^{n} \frac{N!}{R!(N-R)!} P^{R})1-P)^{N-R} + \frac{N}{(-1)!(N+1)!} P^{-1}(1-P)^{N+1}\right]$$

$$= P\left[1 = \frac{(1-P)^{N+1}}{(-1)!(N+1)P}\right]$$

The second term in the brackets of the last expression is zero since $(-1) = \infty$. [$K! = K-(L-1)!$, by definition. When $K = 1$, $K! = 1 = 1 \times (1-1)! = (0)! = 1$. Then substituting $K = 0$ gives $0! = 0 \times (0-1)! = 0 \times (-1)! = 1$. T en $(-1)! = \infty$]. Then $F(n) = P$. Since the right hand side does not contain n, the total production expectancy is independent of the number of lines (n).

Sample Calculations

Select Turnaround Pattern No. 1.

Grouping	Plants	Average failure rate per K hrs.	Unscheduled Outages hr./K hrs.	Probability of one line running	Number of Lines
A	2,3,4,6	0.6948	120.6	0.9227	8 (1 spare)
B	5,17	.3417	50.33	.9828	2
C	7.1,7.2, 7.3,8	-	-	.9900	1
D	12.1	.2542	175	.9574	5 (1 hot spare)
E	12.2,12.3	.2935	79.0	.9773	3
F	12.4	.0552	100.3	.9945	4
G	10	.1653	59.3	.9903	3 (1 hot spare)
H	1	1.577	24.4	.9630	* (2 spares)

Production combination, the probabilities thereof, and the calculations to asses the mean expected production rate (as fraction of design) follow. These show that the mean on-stream factor for Turnaround Pattern No. 1, defined above, is estimated to be 0.8774, and the production is 53440 B/CD.

Production Factor, f [1]	Minimum Number of Trains on-stream for Group								Probability [2] that Minimum No. of Trains will be on-stream out of Total Available for Group								Probability of "f" or higher P [3]	ΔP [4]	f×ΔP
Number of Trains Available →	8	2	1	5	3	4	3	8											
	A	B	C	D	E	F	G	H	A	B	C	D	E	F	G	H			
1.000	8	2	1	4	3	4	2	6	0.52540	0.96590	0.99000	0.98335	0.93343	0.97818	0.99972	0.99753	0.44985	0.44985	0.44985
0.900				3								.99928					.45714	.00729	.00656
.875	7								.87752								.76351	.30637	.26807
.833								5								.99988	.76531	.00180	.00150
.750	6					3			.98077					.99982			.87428	.10897	.08173
.667					2			4					.99847			.99999	.93530	.06102	.04068
.625	5								.99807								.95180	.01650	.01031
.600				2								.99999					.95248	.00068	.00041
.500	4	1				2	1	3	.99988	.99970				.99999	.99999	.999999	.98804	.03556	.01778
.375	3								.99999								.98815	.00011	.00004
.333					1			2					.99998				.98964	.00149	.00050
.300				1								.999999					.98965	.00001	–
.250	2					1								.999999			.98966	.00001	–
.167								1											
.125	1																		
0	0	0	0	0	0	0	0	0	1.00000	1.00000	1.00000	1.00000	1.00000	1.00000	1.00000	1.00000			

Notes:

[1] Fraction of total capacity with all available trains running.

[2] Equal to

$$\sum_{Pr=r}^{n} \binom{n}{r} P^k (1-P)^{n-k}$$

where: n = total number of trains available
r = minimum number of trains required
k = number of trains operating ($r \le k \le n$)
P = probability that one train of group will operate (see Table 7)

$$\binom{n}{k} = n!/k!(n-k)!$$

[3] Equal to the product of probabilities for Group A through H.

[4] This is the expectancy of achieving the configuration of the system as stated, and is equal to the difference of the probability for the subject configuration and the probability of the immediate preceding configuration.

$\Sigma f \times \Delta P$ = 0.87743

Production = 0.87743 x 60,900B/SD

= 53440B/CD

On-Stream factor = $\frac{53440}{60900}$

= 0.8774