2 F

PNL-2590
UC-70

Criticality Safety Comparisons of Spent Fuel Facility Concepts

S. W. Heaberlin
G. P. Selby

September 1978

Prepared for the U.S. Department of Energy
under Contract EY-76-C-06-1830

Pacific Northwest Laboratory
Operated for the U.S. Department of Energy
by

Battelle
Memorial Institute

PNL-2590

NOTICE

This report was prepared as an account of work sponsored by the United States Government. Neither the United States nor the Department of Energy, nor any of their employees, nor any of their contractors, subcontractors, or their employees, makes any warranty, express or implied, or assumes any legal liability or responsibility for the accuracy, completeness or usefulness of any information, apparatus, product or process disclosed, or represents that its use would not infringe privately owned rights.

The views, opinions and conclusions contained in this report are those of the contractor and do not necessarily represent those of the United States Government or the United States Department of Energy.

PACIFIC NORTHWEST LABORATORY
operated by
BATTELLE
for the
UNITED STATES DEPARTMENT OF ENERGY
Under Contract EY-76-C-06-1830

Printed in the United States of America
Available from
National Technical Information Service
United States Department of Commerce
5285 Port Royal Road
Springfield, Virginia 22151

Price: Printed Copy $____*; Microfiche $3.00

*Pages	NTIS Selling Price
001-025	$4.00
026-050	$4.50
051-075	$5.25
076-100	$6.00
101-125	$6.50
126-150	$7.25
151-175	$8.00
176-200	$9.00
201-225	$9.25
226-250	$9.50
251-275	$10.75
276-300	$11.00

PNL-2590
UC-70

3 3679 00049 1300

CRITICALITY SAFETY COMPARISONS OF SPENT FUEL FACILITY CONCEPTS

S. W. Heaberlin
G. P. Selby

September 1978

Prepared for
the U.S. Department of Energy
under Contract EY-76-C-06-1830

Pacific Northwest Laboratory
Richland, Washington 99352

TABLE OF CONTENTS

1.0 INTRODUCTION 1

2.0 SUMMARY 2

3.0 METHODS 3

4.0 SINGLE CANISTER CONCEPTS 4

4.1 DRYWELL STORAGE CONCEPT (DWSC) 4

4.2 SEALED STORAGE CASK CONCEPT - 1 (SSCC-1) 5

4.3 SEALED STORAGE CASK CONCEPT - RSSF (SSCC - RSSF) 6

5.0 MULTIPLE CANISTER CONCEPTS 6

5.1 SEALED STORAGE CASK CONCEPT - 2 (SSCC-2) 6

5.2 DRYWELL WITH SUPPLEMENTAL COOLING (DWSC-2) 7

5.3 AIR COOLED VAULT CONCEPT (ACVC) 8

5.4 WATER BASIN CONCEPT (WBC) 10

6.0 CONCLUSIONS 13

REFERENCES 15

APPENDIX A A-2

APPENDIX B B-2

LIST OF FIGURES

1. Reactivity of FWSC-2 for Low Density Interspersed Water - KENO-IV 9

2. Reactivity of ACVC for Low Density Interspersed Water - KENO-IV 11

B.1 Drywell Geometry Model, Flooded B-3

B.2 SSCC-1 Geometry Model, Canister Flooded B-3

B.3 SSCC-2 Geometry Model, Canisters Flooded B-4

B.4 DWSC-2 Geometry Model, Canisters Flooded B-5

B.5 ACVC Geometry Model, One Flooded Canister (PWR) B-5

B.6 ACVC Geometry Model, One Flooded Canister (BWR) B-6

LIST OF TABLES

1. SSCC-2 With Intact Canisters and Interspersed H_2O 7

2. DWSC-2 With Intact Canisters and Interspersed H_2O 8

3. ACVC With Intact Canister and Insterspersed H_2O 10

4. Fuel Storage Rack Spacings 12

1.0 INTRODUCTION

Recent changes in U.S. domestic nuclear energy policies have deferred indefinitely the reprocessing of spent nuclear fuel. Consideration is therefore being given to the retrievable storage of spent fuel. The Spent Fuel Handling and Packaging program has as its goal the design and eventual construction of a facility to store the increasing inventory of spent fuel. Seven storage concepts have been proposed.[1] In evaluating the suitability of these concepts, many features must be examined. Since a significant amount of fissile material is still contained in the unreprocessed fuel, nuclear criticality safety is one of the items of concern. The purpose of this study is to provide a comparison of the concepts from the viewpoint of criticality safety.

The seven concepts considered are:

- Drywell Storage Concept (DWSC)
- Sealed Storage Cask Concept-1 (SSCC-1)
- Sealed Storage Cask Concept-RSSF (SSCC-RSSF)
- Sealed Storage Cask Concept-2 (SSCC-2)
- Drywell With Supplemental Cooling (DWSC-2)
- Air Cooled Vault Concept (ACVC)
- Water Basin Concept (WBC)

It is important to emphasize that this study is a comparison. No attempt was made to demonstrate safety by finding the absolute worse cases for each concept. Rather, a set of conservative conditions was applied to all concepts allowing a basis for comparison between them. Likewise, in some instances, results from this study due to its conservatism would imply an unsafe situation for a given concept, whereas detailed analysis of an actual design may show it to be acceptable.

With the relatively long storage times involved (25-100 yars), the possibility of abnormal conditions should be considered. One major assumption carried through the study is that water is allowed to enter the storage package. Water floods of casks and vaults, as well as intrusion of low

density water was also allowed. Consideration was given to both intact fuel rods and fine powder which could result from rod disintegration.

2.0 SUMMARY

The seven storage concepts were analyzed from the viewpoint of nuclear criticality safety. While the analysis is not adequate for use in licensing, it provides an adequate basis for comparison. All concepts, with the exception of the water basin, were assumed to use the same canister type. This 13-in. ID cylinder contains one PWR assembly (Westinghouse 17 x 17) which is composed of fresh UO_2 fuel enriched to 3.5 wt% ^{235}U. Canister failure and water intrusion were allowed. Consideration was also given to fuel rod disintegration due to UO_2 oxidation. The basic assumptions and methods are described in the next section. Details of the analysis and the results are given in the following sections.

For the case of intact fuel rods, the single canister concepts are preferred from the viewpoint of criticality safety. The SSCC-1 would be the best choice followed by the SSCC-RSSF, and next the Drywell. For the multiple canister concepts the order of preference is DWSC-2, SSCC-2, and ACVC. For intact fuel rods all concepts are potentially licensable, however the SSCC-2 and ACVC may be questionable.

The disintegration of fuel rods poses a safety problem for all concepts.[a] While one concept could be more reactive than another, the difference is small. As described none of the concepts[a] would be acceptable unless:

- Disintegration is shown to be incredible, or
- Water intrusion is shown to be incredible.

Canister redesign and/or less restrictive assumptions (allowing credit for burnup for instance) might yield a safe design even if the two items above cannot be met.

(a) The Water Basin Concept is an exception since fuel rod disintegration is not considered to be a problem for that type of storage.

3.0 METHODS

The object of this study was to provide a criticality safety comparison of the spent fuel storage concepts described in Reference 1. Therefore, rather than a detailed study into each concept to determine the special condition which would constitute the worst credible case for it, a standard set of assumed conditions was applied to all concepts. Comparisons are generally made on the basis of the effective multiplication factor k_{eff}. A critical system will have k_{eff} equal to one. Values less than one are subcritical. A common practice is to not allow k_{eff} to exceed 0.95 to provide an adequate safety margin.

Each concept was assumed to contain a single PWR assembly containing UO_2 enriched to 3.5 wt% ^{235}U. It was shown that using a single PWR assembly is conservative when compared to three BWR assemblies (see Sections 4.1 and 5.3). The BWR fuel was assumed to be enriched to 2.6 wt% ^{235}U. No credit was taken for fission products or fissile depletion. The assembly sizes used were that of the Westinghouse 17 x 17 and the General Electric 8 x 8 for the PWR and BWR respectively. It was assumed each concept used the same 13-in. ID (PWR) or 17-in. ID (BWR) helium filled canister. These canisters are sealed and leak checked. However, with the long storage times (25-100 years) and potentially large number of canisters (>50,000), the possibility of canister leakage and water intrusion must be considered. This study assumes the canisters fail and water completely fills them.

Another abnormal condition considered was the possibility of fuel rod disintegration. This phenomenon, which is caused by UO_2 oxidation at elevated temperatures, can reduce fuel rods to fine powder. This condition was treated as UO_2 in water at optimum moderation (2400 g UO_2/ℓ). The optimum moderation condition was assumed because the amount of water in the canister would not be controlled.

Along with the disintegration cases intact fuel rods were also considered. These were taken as 0.323-in. pellet diameter fuel rods (standard Westinghouse 17 x 17) at optimum water to fuel volume ratio. This optimization was used because after irradiation and transportation the rod pitch could not be guaranteed to be the original as built values. This is a conservative assumption.

Various neutron reflection conditions were applied to the various concepts. For single canister concepts, these amounted to the actual or a conservative approximation to the material surrounding the package. For multiple canister concepts, the possibility of filling the entire storage area with water introduced full water reflection cases. An infinite thickness of surrounding water can be approximated by 6 inches in the calculations. In all concepts, the steel canister walls were neglected.

For multiple canister concepts, the possibility of essentially dry canisters with interspersed water between them was also considered. The fuel material was modeled as homogeneous UO_2 at the smear density of a PWR (Westinghouse 17 x 17) assembly with 1 wt% water. The 1 wt% water was included to account for residual moderators in the fuel assembly. This is likely to be quite conservative, however since the goal in the study is comparison, the conservatism should not generate concern. The density of the interspersed water was optimzed for each of the multiple canister concepts.

All of the calculations were performed with the KENO-IV Monte Carlo code.[2] Neutron cross sections were prepared with the EGGNIT-II[3] code using processed ENDF/B-IV neutron cross section data.

4.0 SINGLE CANISTER CONCEPTS

Three of the seven concepts place each fuel assembly in a position that isolates it from all the others, using earth or concrete for shielding. They are the Drywell, the Sealed Storage Cask Concept-1, and the Sealed Storage Cask Concept-RSSF. Individual discussions of the single canister concepts follow below.

4.1 DRYWELL

The drywell (PWR consists of a 16-in. diameter vertical hole in the ground with a 3/8-in. wall, 16-in. O.D. steel pipe fitting tightly inside. A 2-ft layer of grout is poured in the bottom and a fuel assembly canister is placed on it (O.D. = 14 inches, leaving 5/8-in. radial clearance). The hole is then plugged with a 7-ft concrete plug.

The worse case evaluated was a full water flood in the pipe, the canister and the soil. The compositions of the soils and concrete used are given in Appendix A. The computer model that was used was somewhat simplified. A drawing of the geometry model used is given in Figure B.1 of Appendix B. The steel was eliminated, leaving the fuel element in a 16-in. diameter cylinder of water, surrounded by water-laden soil. The resultant reactivity for intact fuel rods was $k_{eff} = 0.935 \pm 0.005$ for 30 vol% H_2O in soil. For 40 vol% H_2O in the soil, the reactivity is $k_{eff} = 0.924 \pm 0.004$.

In the case of the BWR drywell, the hole is 20 in. in diameter, with the 17-in. ID BWR canister size. This contains three BWR assemblies. The results for a full flood condition with intact rods are: $k_{eff} = 0.860 \pm 0.005$, with 40 vol% H_2O in the surrounding soil. The PWR application of this concept is clearly less reactive than the PWR.

If the fuel has disintegrated and mixed with water while the canister and soil are flooded. then the PWR case will approximate a 13-in. cylinder of solution with full water reflection. Assuming optimum solution, 2400 g UO_2/ℓ, the reactivity is $k_{eff} = 1.055 \pm 0.006$.

4.2 SEALED STORAGE CASK CONCEPT-1 (SSCC-1)

The SSCC-1 (PWR) is a concrete cask surrounding a single canister. The cask is an annulus 40 in. thick, with its inner surface 4 in. from the canister. There is more concrete above and below the canister. A horizontal cross section of this geometry is shown in Figure B.2.

This concept is geometrically very similar to the drywell; the two significant differences are the nature of and the distance to the reflector. The reactivity of the SSCC-1 with only the canister flooded is $k_{eff} = 0.929 \pm 0.005$. With the associated statistical deviations, this value is equivalent to the drywell. If both the cask and canister are flooded, the fuel has essentially full water reflection, a case which has $k_{eff} = 0.943 \pm 0.005$.

In case of rod disintegration, if the cask and canister are both flooded, then the situation may be approximated by full water reflection, which gives $k_{eff} = 1.055 \pm 0.006$. If the cask is not flooded, the reactivity is about the same, $k_{eff} = 1.051 \pm 0.006$.

4.3 SEALED STORAGE CASK CONCEPT - RSSF (SSCC-RSSF)

This concept is based on the Retrievable Surface Storage Facility (RSSF) above ground casks. Its design is somewhat similar to the SSCC-1.

The canister is enclosed in an overpack (a slightly bigger canister), which is loaded into the concrete cask. For heat transfer reasons, there are natural convection air passages bringing in outside air and channeling it past the overpack.

From a criticality safety standpoint, the cases analyzed for the SSCC-1 can be applied to the SSCC-RSSF. Data on overpack size and inner annulus diameter were not available. It was assumed these dimensions would not make the SSCC-RSSF significantly different from the SSCC-1. Therefore no additional calculations were performed.

5.0 MULTIPLE CANISTER CONCEPTS

Four of the seven concepts involve more than one fuel assembly per location. They are: the Sealed Storage Cask Concept-2, with six assemblies in one containment vessel; the Drywell with Supplemental Cooling, with ten assemblies; the Air-Cooled Vault Concept, with 500 assemblies per vault, and the Water Basin Concept, which has over 4000 assemblies per basin. Individual discussions of each of the multiple canister concepts follow below.

5.1 SEALED STORAGE CASK CONCEPT-2 (SSCC-2)

The SSCC-2 is similar to SSCC-1 in that the shield is a thick concrete annulus. The SSCC-2, however, is larger, with an inside radius of 29 inches. Inside are six canisters arrayed with their centers on a 36-in. diameter circle concentric with the annulus.

The only simplification made in the computer model was a change from rectangular fuel assemblies to cylindrical, preserving cross-sectional area and volume. This assumption should have a minimal effect on reactivity. A horizontal cross-section of one quadrant of SSCC-2 with flooded canisters is shown in Figure B.3.

A full flood of the cask and all canisters nearly isolates each assembly, so each one is surrounded by an effectively infinite water reflector. The reactivity for the infinite water reflection case is $k_{eff} = 0.943 \pm 0.005$. The full flood of SSCC-2 results in $k_{eff} = 0.942 \pm 0.005$.

A worse case is the draining of the cask while the canisters remain flooded, resulting in $k_{eff} = 0.985 \pm 0.006$. This is the worst case evaluated.

The reactivity of SSCC-2 with the canisters intact and the cask filled with interspersed water (heavy fog) is given in Table 1.

TABLE 1. SSCC-2 with Intact Canisters and Interspersed H_2O

H_2O Density, g/cm^3	k_{eff}
0.03	0.370 ± 0.007
0.05	0.380 ± 0.007
0.07	0.396 ± 0.005
0.09	0.389 ± 0.005

The reactivity peaks at about 0.07 g/cm^3 water with $k_{eff} = 0.396 \pm 0.005$. These very low values occur because only six fuel assemblies are involved.

5.2 DRYWELL WITH SUPPLEMENTAL COOLING (DWSC-2)

DWSC-2, the drywell concept with heat pipes, isolates ten canisters in a single concrete vault. The canisters are arranged in two parallel rows of five, 6 ft apart center-to-center. Within rows, the canisters are spaced on 3-ft centers.

The major simplification made in the computer model used was the elimination of the heat pipes. A plot of the model appears in Figure B.4.

Since one foot of water is enough for full neutronic isolation, a full water flood isolates each canister. If the basin is flooded the worst that could then happen is concurrent flooding of a canister, resulting in an infinite water reflection case with $k_{eff} = 0.943 \pm 0.005$.

With the canisters still flooded but the vault drained, k_{eff} = 0.944 ± 0.005. This is essentially the same as the vault flood case. The draining of the vault introduced two competing effects. These are an increase in interaction between assemblies versus descreased reflection. These effects balanced each other out.

The reactivities for intact canisters and interspersed water in the vault are shown in Table 2, and displayed in Figure 1.

TABLE 2. DWSC-2 with Intact Canisters and Interspersed H_2O

H_2O Density, g/cm^3	k_{eff}
0.01	0.483 ± 0.006
0.02	0.540 ± 0.006
0.03	0.570 ± 0.007
0.05	0.542 ± 0.006
0.07	0.515 ± 0.007
0.09	0.478 ± 0.005

The condition of greatest reactivity is 0.03 g/cm^3 H_2O; again, the values are low because of the small number of assemblies involved (ten).

5.3 AIR COOLED VAULT CONCEPT (ACVC)

The air cooled vault contains 500 assemblies in five blocks of 100 each (10 x 10 square, 3-ft centers). The blocks are in a row, with 6 ft between blocks (center-to-center; essentially, one row is skipped). Each assembly is in a standard canister, which is enclosed in a slightly larger steel overpack canister. Above and below the overpack array are 3 ft of air space, followed by concrete.

For the purpose of computer modeling, the conservative assumption of an infinite two-dimensional array was made. A plot of the model, a horizontal cross-section of one (flooded) canister and its surrounding space is shown in Figure B.5.

For the case of a full flood of the vault and canisters, the result is again full water reflection with reactivity k_{eff} = 0.943 ± 0.005.

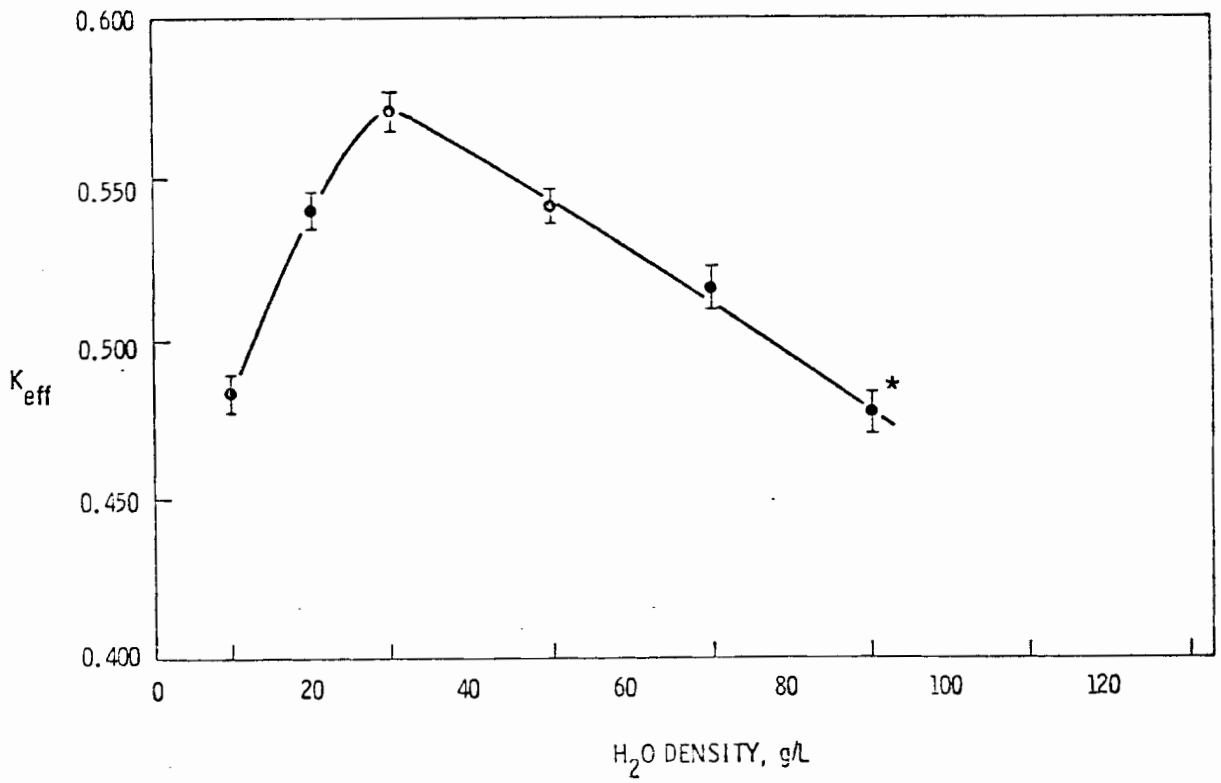

FIGURE 1. Reactivity of DWSC-2 for Low Density Interspersed Water-KENO-IV

* Error bars indicate one standard deviation.

Leaving the canisters flooded while draining the vault results in a worse case, with k_{eff} = 1.028 ± 0.007. For comparison, the same situation with BWR fuel has k_{eff} = 0.889 ± 0.004. A BWR geometry appears in Figure B.6.

Table 3 gives reactivity for cases of interspersed H_2O and intact canisters. These data are presented graphically in Figure 2.

TABLE 3. ACVC with Intact Canisters and Interspersed H_2O

Density H_2O, g/cm^3	k_{eff}
0.01	1.003 ± 0.008
0.02	1.073 ± 0.006
0.03	1.064 ± 0.007
0.04	1.058 ± 0.007
0.05	1.016 ± 0.006
0.07	0.906 ± 0.007
0.09	0.804 ± 0.007

The highest reactivity is at 0.02 g/cm^3 interspersed water density. This value is much higher than the peak values for the SSCC-2 and DWSC-2 interspersed water cases. This is caused by the much larger number of interacting canisters.

5.4 WATER BASIN CONCEPT (WBC)

This concept is included for reference purposes only, since it is not a passive system. The reference design of the WBC calls for assemblies stored in racks within a large water pool. The water provides radiation shielding and a cooling medium. The water is pumped through heat exchangers, venting the thermal energy to the environment. The design calls for PWR assemblies to be stored on 15-in. by 15-in. grids. BWR assemblies would be stored on 8-in. by 8-in. grids. Fixed neutron poisons would not be used.

Since storage of spent fuel in water basins is an established technology, no calculations were performed on this design. Comparisons can be

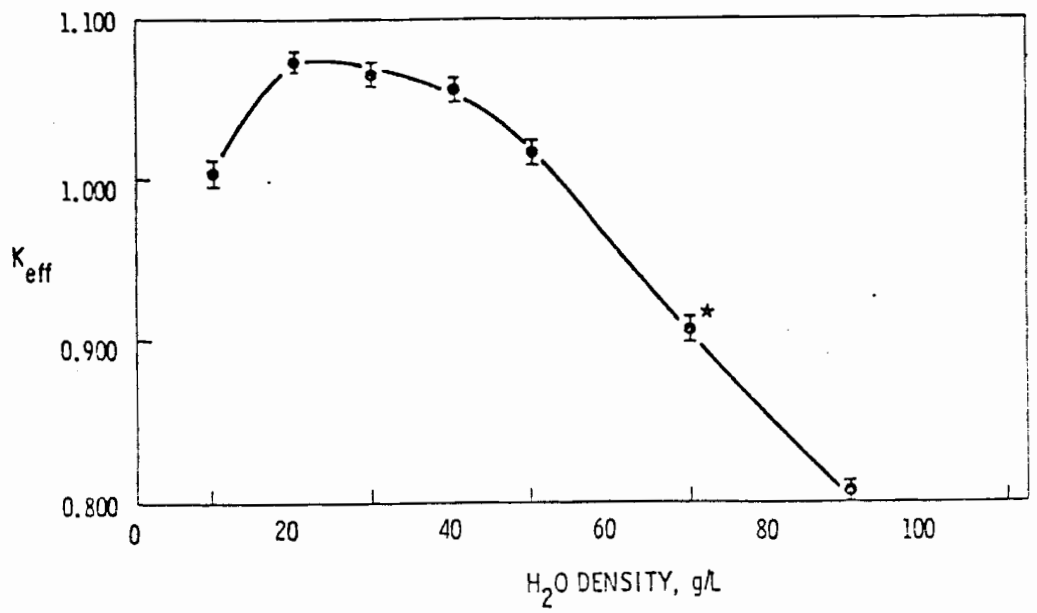

FIGURE 2. Reactivity of ACVC for Low Density Interspersed Water-KENO-IV

* Error bars indicate one standard deviation.

made to existing basins. Table 4 shows the rack spacing for a BWR and PWR basin. The original values were probably quite conservative. Reducing conservatism and adding stainless steel to the racks allows a significant reduction in spacing. Addition of boron as a neutron poison allows greater reduction.

TABLE 4. Fuel Storage Rack Spacings[4]

	Three Mile Island PWR	Dresden BWR
Original, inches	21.0	10.0
Stainless steel, inches	13.0	7.3
Stainless steel + boron, inches	10.5	6.5

The spacing given in Table 4 indicates that the proposed 15-in. and 8-in. spacing could be a little optimistic. However, a small increase in spacing or use of steel plates could resolve potential criticality safety questions.

The problem of fuel rod disintegration does not arise in water basin storage. The lower fuel temperature essentially precludes the oxidation reaction. Even if disintegration were to occur the combination of large area for dispersion and quick detection would render the problem mute.

In general, the water basin concept generates no reasonably unresolvable criticality safety concerns. While any given basin design requires rigorous demonstration of safety, the existing experience with water basin storage shows that such demonstration is possible.

6.0 CONCLUSIONS

In making comparisons between spent fuel storage concepts, a division should be made between intact fuel rods and disintegrated fuel rod cases.

For intact fuel rods the single canister concepts have a slight advantage over the multiple canister concepts in their slightly lower reactivities. For this reason the single canister concepts would be favored from a criticality safety viewpoint. Although all three of these concepts have approximately equal reactivities the SSCC-1 would be preferred. This preference is due to its reduced likelihood of water intrusion. The SSCC-RSSF would be next in preference and the Drywell last. The Drywell is least favored of the single canister concepts because it is below ground level and minor flooding could provide a source of water. The above ground casks would require a major flood or severe cask damage coupled with heavy precipitation to provide a water source.

Of the multiple canister concepts (excepting WBC), for the intact fuel rod cases the DWSC-2 is preferred. All concepts have essentially equal reactivity for a complete flood condition. The DWSC-2, however, has the lower reactivity for the canister flooded, inter-canister space dry condition. The ACVC shows a higher reactivity than the SSCC-2 for this condition. Both, however, could have a criticality safety problem for this condition. The case of essentially dry canisters with interspersed water poses no problem for the DWSC-2 or the SSCC-2. This condition could be a potential problem for the ACVC. Therefore the second preference would be the SSCC-2 and last the ACVC. For intact fuel rods all concepts are potentially viable. The SSCC-2 and ACVC may be questionable, however.

For the disintegrated fuel rod case all of the concepts have a potential safety problem. A 13-in. diameter cylinder of 3.5 wt% enrichment UO_2 in water at 2400 g UO_2/ℓ with water reflection is critical. A cylinder diameter of ten inches or less would be required to achieve an accepted reactivity under these conditions. The case could be made that the single canister concepts need not have full water reflection, however the reduction in reactivity would not be sufficient to render an acceptable reactivity value

at the 13-in. diameter. From the standpoint of criticality safety none of the concepts as described (except WBC) would be acceptable unless:

- Disintegration is shown to be incredible, or
- Water intrusion is shown to be incredible.

There exists a potential that significant canister redesign and/or changes in the basic assumptions[a] could yield an acceptable design even if the two items above cannot be met.

None of the concepts can match the WBC in preference from the criticality safety viewpoint. The fact that storage in WBC currently exists is a factor, but its immunity from the disintegration problem is its major advantage.

(a) Allowing credit for fuel burnup is the most notable candidate.

REFERENCES

1. Spent Unreprocessed Fuel Facility Engineering Studies. RHO-LD-2, Rockwell Hanford Operations, October 1977.

2. L. M. Petrie and N. F. Cross, KENO-IV, An Improved Monte Carlo Criticality Program. ORNL-4938, Oak Ridge National Laboratory, November 1969.

3. C. R. Richey, EGGNIT: A Multigroup Cross Section Code. BNWL-1203, Battelle, Pacific Northwest Laboratories, Richland, Washington, November 1969.

4. A. B. Johnson, Jr., Behavior of Spent Nuclear Fuel in Water Pool Storage. BNWL-2256, Battelle, Pacific Northwest Laboratories, Richland, Washington, September 1977.

5. Reactor Physics Constants. 2nd Edition, ANL-5800, Argonne National Laboratory, July 1977.

6. K. R. Ridgway and R. D. Carter, Criticality Prevention Parameters of Plutonium in Soils. ARH-2622, Atlantic Richfield Hanford, October 1972.

APPENDIX A

COMPOSITION OF REFLECTORS

COMPOSITION OF REFLECTORS

Composition of Reflectors

Composition of 04 Concrete[5]

Element	Atom Percent
H	10.43
O	58.43
Na	1.396
Mg	0.199
Al	3.258
Si	21.06
K	0.924
Ca	3.885
Fe	0.417

Density = 2.35 g/cm^3

Composition of Hanford Soil (Atom Percent)[6]

Element	Dry Soil, No Voids	30 Volume % H_2O	40 Volume % H_2O
H	0.0	24.90	32.07
O	65.10	53.23	49.82
Si	27.87	17.46	14.46
Al	2.460	1.542	1.277
Fe	1.094	0.685	0.567
Ca	1.914	1.199	0.993
Na	0.541	0.339	0.281
Mg	1.022	0.640	0.531
	Density = 2.43 g/cm^3	Density = 2.001 g/cm^3	Density = 1.858 g/cm^3

APPENDIX B

GEOMETRY MODELS FOR STORAGE CONCEPTS

GEOMETRY MODELS FOR STORAGE CONCEPTS

The following six figures show the geometry models used in the calculations performed as part of the criticality safety comparison for the spent fuel storage concepts. Each concept is represented once. Other reflector conditions were assumed for each concept but one figure is sufficient to demonstrate the approach used.

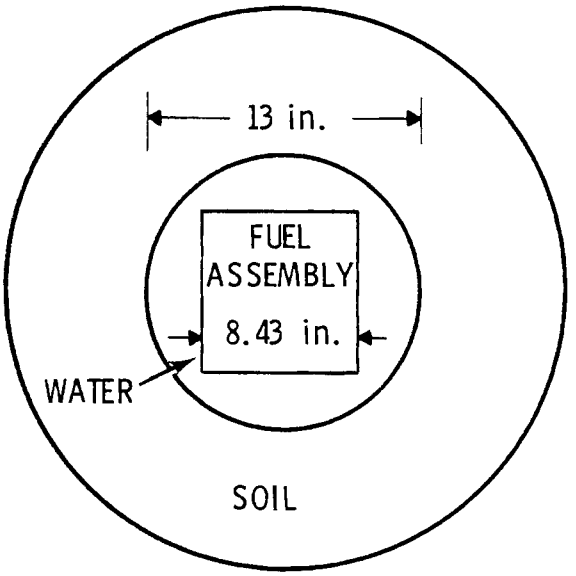

FIGURE B-1. Drywell Geometry Model, Flooded

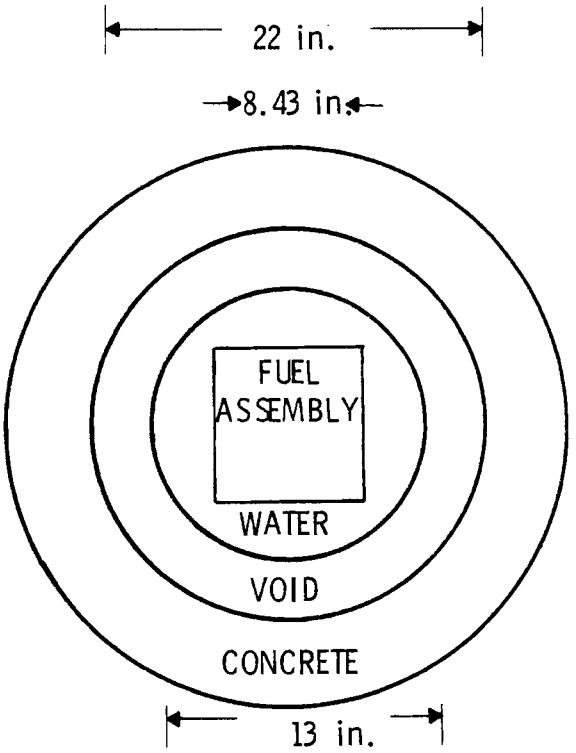

FIGURE B-2. SSCC-1 Geometry Model, Canister Flooded

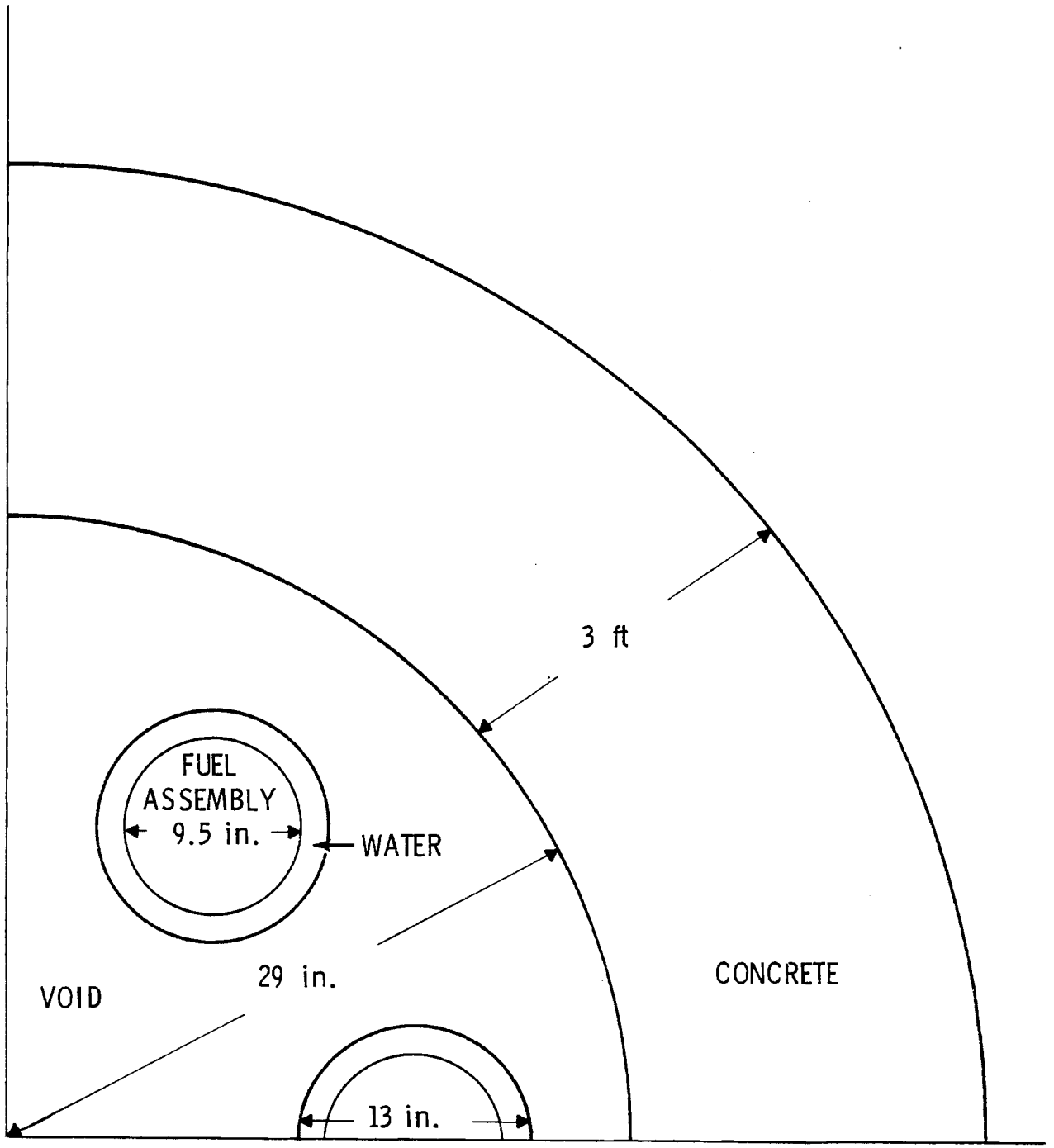

FIGURE B-3. SCCC-2, Geometry Model, Canisters Flooded

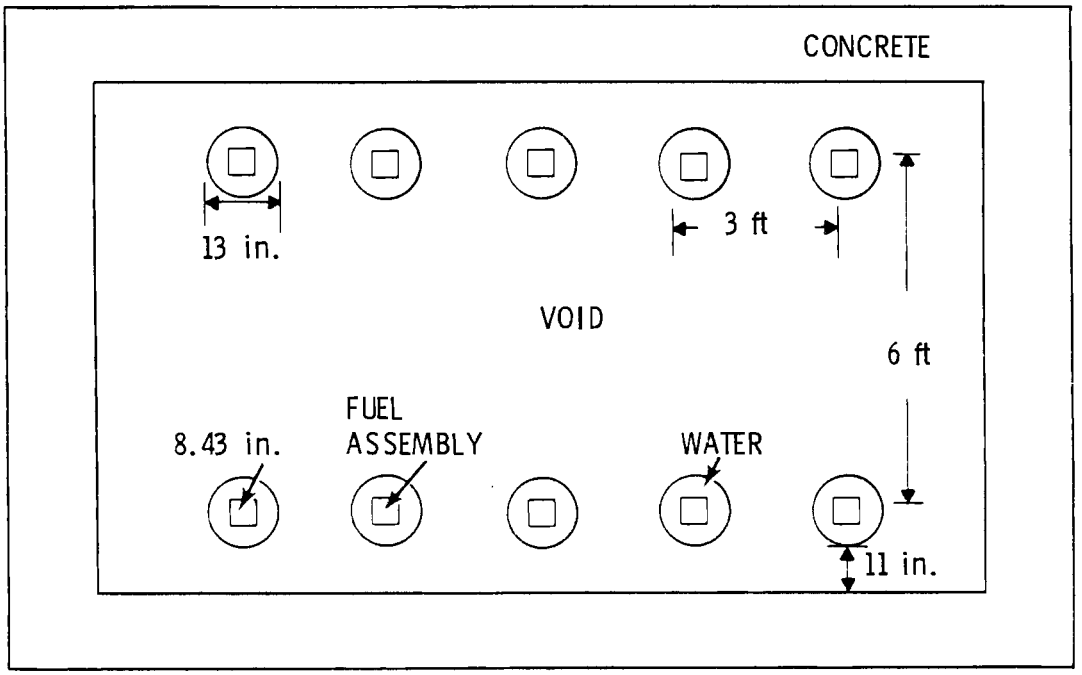

FIGURE B-4. DWSC-2 Geometry Model, Canisters Flooded

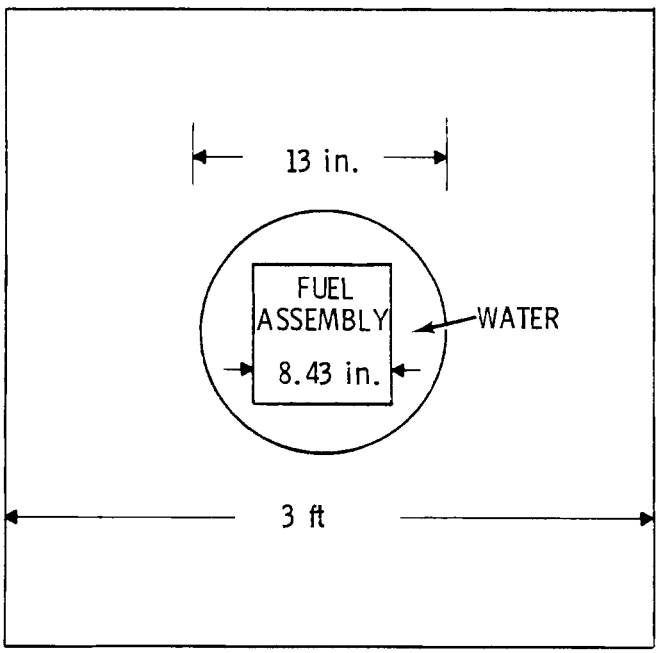

FIGURE B-5. ACVC Geometry Model, One Flooded Canister (PWR)

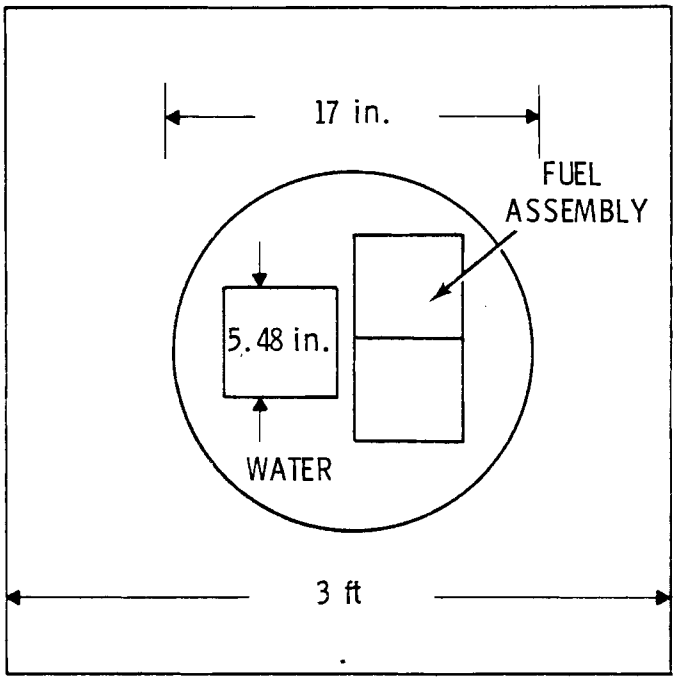

FIGURE B-6. ACVC Geometry Model, One Flooded Canister (BWR)

DISTRIBUTION

No. of Copies

OFFSITE

A. A. Churm
U.S. DOE Chicago Patent Group
Chicago Operations Office
9800 South Cass Avenue
Argonne, IL 60439

27 U.S. DOE Technical Information Center

C. R. Cooley
U.S. Department of Energy, Headquarters
Washington, DC 20545

J. B. Work
U.S. Department of Energy, Headquarters
Washington, DC 20545

2 A. Roberts
U.S. Department of Energy, Nevada Operations Office
P.O. Box 14100
Las Vegas, NV 89114

R. D. King
U.S. DOE Savannah River Operations Office
P.O. Box A
Aiken, SC 29801

F. L. Harris
Kaiser Engineers, Inc.
300 Lakeside Drive
Oakland, CA 94666

2 D. C. Durril
Westinghouse Electric Corp.
Advanced Energy Systems Division
P.O. Box 708
Mercury, NV 89023

No. of Copies

2 J. B. Wright
Westinghouse Electric Corp.
Advanced Energy Systems Division
P.O. Box 10864
Pittsburgh, PA 15236

ONSITE

5 Hanford Engineering Development Laboratory

3 D. A. Cantley
J. F. Fletcher
R. L. Knecht

6 U.S. Department of Energy, Richland Operations Office

W. E. Cawley
O. J. Elgert
P. G. Harris
F. L. Goldsberry
R. B. Goranson
H. E. Ransom

7 Rockwell Hanford Operations

K. H. Henry
2 W. J. Kurzeka
3 D. A. Turner
D. D. Wodrich

35 Pacific Northwest Laboratory

2 I. S. Levy
R. C. Liikala
3 R. D. Widrig
L. D. Williams
R. E. Westerman
C. L. Brown
E. D. Clayton
5 G. P. Selby
10 S. W. Heaberlin
M. K. White
W. K. Winegardner
D. E. Larson
5 Technical Information
2 Publishing Coordination