235 9-24-80

ornl

MASTER

ENVIRONMENTAL SCIENCES LABORATORY

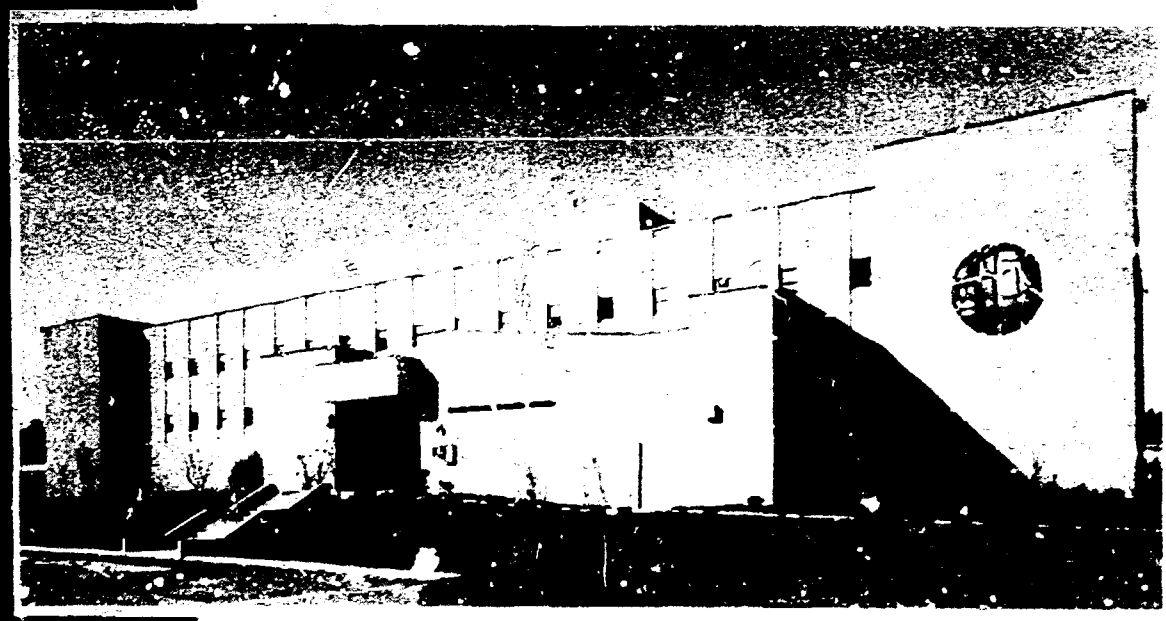

Dedication

February 26-27, 1979

OPERATED BY
UNION CARBIDE CORPORATION
FOR THE UNITED STATES

ORNL-5666
Distribution Category UC-11

ENVIRONMENTAL SCIENCES LABORATORY DEDICATION

Daniel J. Nelson Auditorium
February 26 and 27, 1979

S. I. Auerbach and N. T. Millemann
Editors

Date Published: September 1980

DISCLAIMER

OAK RIDGE NATIONAL LABORATORY
Oak Ridge, Tennessee 37830
operated by
UNION CARBIDE CORPORATION
for the
DEPARTMENT OF ENERGY

TABLE OF CONTENTS

	PAGE
PREFACE	v
WELCOMING REMARKS (S. I. Auerbach)	1
INTRODUCTORY REMARKS (C. R. Richmond)	5
DEDICATORY ADDRESS (Ruth C. Clusen)	9
REMARKS (Robert Rabin)	15
REMARKS (Steven R. Reznek)	19
COMMENTS (C. R. Richmond and S. I. Auerbach)	23
PERSPECTIVES IN ECOLOGY, Part I.	29
The Institutional Challenges for Ecology (John E. Cantlon)	31
Applications of Ecology to Environmental Assessment: The Role of Ecologists in the Decision-Making Process (Frank F. Hooper)	45
Radiation Ecology at Oak Ridge (Eugene P. Odum)	53
BANQUET ADDRESS: BRAVO Plus 25 Years (George M. Woodwell)	59
PERSPECTIVES IN ECOLOGY, Part II	65
Water Resources: Significant Issues for the National Laboratories (Frank L. Parker)	67
Systems Ecology: The State of the Art (George M. Van Dyne)	81
Environs: Relativistic Elementary Particles for Ecology (Bernard C. Patten)	105
Challenges in Landscape Ecology (Frederick E. Smith)	129
CLOSING REMARKS (S. I. Auerbach)	143

PREFACE

The dedication of the new Environmental Sciences Laboratory coincided with the 25th year of the establishment of the science of "ecology" at Oak Ridge National Laboratory. That quarter century witnessed the evolution of ecology from an obscure, backwater discipline of biology to a broadly used, everyday household word. The transition reflected broad and basic changes in our social and cultural view of the world. This was brought about as a result of the awareness developed in our society of the importance of the environment, coupled with efforts of ecologists and other environmental scientists who identified, clarified, and formulated the issues and challenges of environmental protection for both the lay public and the scientific community. In many respects, the activities in ecology at ORNL were a microcosm of the broader social scene; the particular problems of the environment associated with atomic energy needed to be defined in scientific terms and articulated in both the specific and general sense for a larger audience which was unfamiliar with the field and somewhat alien to its concepts and philosophy. The success of this effort is reflected in the existence of the new Environmental Sciences Laboratory. The achievements during the past 25 years benefited significantly from the efforts of individuals who contributed ideas, research, concepts, and suggestions to the new cadre of ecologists at ORNL. They also provided to the managing forces of the Laboratory an understanding and confirmation of the visions and goals being presented. This dedication volume brings together the thoughts and reflections of many of these scientists whose efforts contributed in a unique and individualistic fashion not only to ORNL but also to the national identification of ecology and its importance to the achievement of our national goals. Their remarks and presentations are not only a pleasant and personally gratifying recapitulation of the past and of ORNL's contributions to ecology but also portend some of the challenges to ecology in the future.

S. I. Auerbach, Director
Environmental Sciences Division

WELCOMING REMARKS

S. I. Auerbach

C. R. Richmond

WELCOMING REMARKS

S. I. Auerbach
Director, Environmental Sciences Division

Good morning and welcome to the occasion that a number of us have looked forward to for a long time, namely, the dedication of this building which is the culmination of lots of efforts and ambitions on the parts of a lot of people. I want to welcome you all here this morning and, in particular, a number of guests from different parts of the country who have all been in some way or another associated with us professionally as colleagues, or involved with our programs through their respective organizations and agencies. I want to welcome our colleagues from our sister organizations: from Pacific Northwest Laboratory, Bert Cushing; from Southeast Laboratory in Athens, the EPA laboratory, Dr. Dave Duttweiler, Director of that Laboratory; locally from the Oak Ridge Associated Universities, Dr. Phil Johnson and Dr. Bill Felling; from the Department of Energy in Washington, Dr. Jeff Swinebroad, the Director of the Division of Ecological Programs, and Dr. William Osburn from that program; from the National Wildlife Society, Dr. Richard Denny, the Executive Director; from Michigan State University, Dr. George Lauff, the Chairman of our Advisory Committee; and from TVA, Dr. Bill Yee, representing the Division of Environmental Planning. I particularly want to welcome a gentleman who played a key role in the history of this organization, Dr. Alvin Weinberg from Oak Ridge Associated Universities. Also, I want to welcome Mr. Samuel Nelson, who is Dan Nelson's brother, and Daniel and Eric Nelson, Dan's sons. We are delighted that you are all here and we look forward, as I said earlier, to this particular day.

Now I would like to introduce a gentleman who is a distinguished radiobiologist in his own right. He joined the Laboratory several years ago as the Associate Director of the Laboratory for the Life Sciences Program. It is a great pleasure for me, therefore, to turn the podium over to Dr. Chester R. Richmond, our Associate Director.

INTRODUCTORY REMARKS

C. R. Richmond
Associate Director, Oak Ridge National Laboratory

Good morning, ladies and gentlemen. It is my pleasure to welcome you to this dedication. I'm very pleased that you have taken the opportunity to travel from your home institutions and from various other places to join us on this occasion. There are representatives from the University of Tennessee and also the State of Tennessee with us this morning and we are very pleased to share these activities with them. I would like, by way of introduction, to introduce you first to the people up here on the stage and then I'd like to introduce you to some of the program that is conducted here in the Environmental Sciences Division. On your left at the far end is Dr. Steven Reznek of the Environmental Protection Agency. He is the acting Deputy Assistant Administrator for Energy, Materials, and Industry and he is no stranger to Oak Ridge. Through personal visits in the past he knows of the programs which are supported here by EPA. Next is Roger Hibbs who is the President of the Nuclear Division of Union Carbide Corporation. Next to Roger is Bob Hart who is the manager of the DOE Oak Ridge Operations Office. Next, Ruth Clusen, the Assistant Secretary for the Environment, whom I'm sure everyone in this room knows or will know. We are especially pleased to have her here today to share time from a very busy schedule. We fully realize that this is a time when hearings are going on in Congress and it is very difficult to get away, even for a brief period of time and we are very much in debt to Ruth for coming to visit us. Next is Herman Postma, Director of the Laboratory, my boss. The empty chair is one that had been reserved for David Freeman who has been tied up because of the inclement weather, and I understand he probably will not be here this morning. Next is an old friend of ours, Bob Rabin, who is the Special Assistant to the Director of the National Science Foundation and who is no stranger to Oak Ridge or its programs. The last person, you heard from him earlier, Stan Auerbach.

I would like at this point to offer my own congratulations to Stan Auerbach who has really been the father, if you will, of this building which we are dedicating today. As you can appreciate, things never happen without people being involved. I think one of the major operating philosophies of the laboratory, although it may not be written down, is that our most important resource is people. Although we are dedicating a facility that is made of brick and mortar, it is the people that make things work and Stan Auerbach is a good example of one of those people who make things work. He has had personal involvement all through the efforts which culminated in this building and, for those biologists among you, the gestation period for this facility is on the the order of 10 years. They don't happen over night.

I would like to say just a few words about the programs that are carried out here in the Environmental Sciences Division. The Laboratory is an institution which is involved in research and development related to energy, energy technologies, and energy-producing systems. We have been able to combine programs that are supported by the Department of Energy, I am speaking of the Life Sciences in particular now, with programs that are supported by other Federal agencies such as the Environmental Protection Agency, the National Science Foundation, and others. If you look across the Laboratory there is a very strong involvement with other agencies who are not represented here today only because they are not directly involved with the programs conducted within the Environmental Sciences Division. We have a broad perspective in terms of trying to look ahead as far as we can to anticipate problems, especially those related to energy production, and to try to marshall the resources we need both from our parent organization, the Department of Energy, and other Federal and state organizations. We try to marshall and integrate these resources so we can best approach the problems that we see and yet function within the mandates of the various agencies. We

think we have been quite successful in this area and I am also extremely proud to have been associated with this particular organization for the last four years. The average age of this Division, I think, is another interesting statistic. It turns out that we are the youngest division in the Laboratory, and that brings with it all sorts of interesting problems if you are in management -- young, eager, ambitious people who are a pleasure to work with.

I think, again, those of you who are familiar with the problems realize that much of systems ecology and much of the work in the environmental area related to energy production has its roots in parts of the program that has been in existence here at Oak Ridge for several decades. The principle objectives of the Environmental Sciences Division deserve a few comments. These are to develop procedures to minimize technological impacts on the environment, to quantify the environmental pathways and the behavior and the fate of pollutants, to evaluate potential ecological effects of pollutant emissions and other impacts resulting from energy technologies, to evaluate natural resource constraints, and to assess the siting and operation of energy-producing facilities. I think it is quite apparent from these important major objectives that to accomplish them we need to integrate our activities in the environmental sciences, the ecological sciences, with all those other resources, be they engineering, or chemistry research, or engineering control activities. Again we marshall the resources of the entire institution and, in fact, the entire area to try to meet these objectives and to solve some of the problems that we see as being critically important national problems. I mentioned very briefly earlier that our major sponsor is the Department of Energy, and within the Department of Energy the Assistant Secretary of the Environment, Ruth Clusen, is our major contact and major source of support. But also important is the fact that programs within the Environmental Sciences Division are supported by the Assistant Secretary for Energy Technology — in the area of fossil energy, solar energy, and nuclear energy — and also by the Assistant Secretary for Resource Applications.

I briefly alluded to input from other Federal agencies, including the Nuclear Regulatory Commission; the Environmental Protection Agency; the National Science Foundation (mainly in the area of problem-oriented ecosystems analysis); the Council on Environmental Quality; the Department of the Interior; and, as an example of nonfederal input, the Electric Power and Research Institute which represents many of the individual utilities. We also have some extremely interesting cooperative programs, one of which is the very important one which is now maturing rapidly with the Tennessee Valley Authority. We have spent considerable time in the last year, starting with the efforts of Dave Freeman and Herman Postma and carrying on down to these individual contacts with working scientists in the two organizations, trying to exploit, if you will, all our resources in solving some of the problems that are common to this part of the United States. It is very obvious that many of these problems need to be addressed on the regional scale and not solely for a site-specific location. So one steps back and looks at these activities. We are engaged in some site-specific activities, for example, from a gasifier at the University of Minnesota at Duluth to regional activities which, for example, would include large portions of the entire Tennessee Valley Region, to actual global concerns that can perhaps best be represented by our growing interest in developing research and development programs related to the carbon dioxide problem. It is very apparent that pollutants can be exported from one country to another or from one part of a country to another. Perhaps some of the best known are the acid rain that is exported from the Northern European countries to Scandinavia and those materials generated around the Great Lakes whose effects are apparent in the northeastern part of our country. Some of the programs in this Division are investigating global impact and, again, the best example I can give you is the carbon dioxide situation.

We have a great number of involvements with other organizations, primarily in the academic community. Our nearest neighbor in this regard is the Oak Ridge Associated Universities and I notice Dr. Johnson is here today. I am pleased that he could be with us. The other activity with a near neighbor includes our many involvements with the University of Tennessee. We also have the Great Lakes Colleges Association, the Southern College University Union, and specific involvements with a great number of institutions around the country.

The Laboratory has diversified a great deal in the past several years and, as many of you know, there is a large effort in terms of subcontracting activities with many organizations. Within the Life Sciences Program much of this activity requires interactions with the academic community, and we find that, especially within the environmental and biological sciences, we have a great number of involvements with many universities across the nation. The staff of the Division is also very much involved with many professional activities, as you would expect, but in addition to these the staff is extremely active in terms of providing input through advisory committees or select panels or advisory bodies to organizations such as various parts of DOE or the National Academy of Sciences. We also try to make our total resources available to local and state governments and organizations whenever possible.

I don't want to spend too much more time giving you an overview of our numerous activities and I think I will stop at this point. You will be hearing from some very prestigious speakers later in the day and tomorrow, and you will be hearing a great deal about some of the contributions to programs associated with the Environmental Sciences Division.

DEDICATORY ADDRESS

Ruth C. Clusen
Assistant Secretary for Environment
U.S. Department of Energy
Washington, D.C.

DR. RICHMOND: I would now like to turn attention to the Dedicatory Address which will be given by Ruth Clusen. As I mentioned earlier she has been in Oak Ridge before, but this is a first official visit to Oak Ridge National Laboratory and we hope we will see much more of her in the future. I am personally very pleased in that during the last half year, I have been able to meet with some of the senior staff within the ASEV and with Mrs. Clusen to discuss problems involving the institutions supported by the DOE/ASEV, from the perspective of staff in the Washington headquarters and representatives from the Laboratories. This activity is very demanding in terms of her available time to discuss plans with people from the field and we view it as an extremely useful mechanism. I think we have already seen some benefits from this interaction and, speaking for many of my colleagues around the country, we are deeply appreciative of the opportunity to take our problems directly to Mrs. Clusen and have her listen very patiently. I would ask her as a personal consideration to have patience with us. It may be difficult at this point in time to understand what she is getting out of this arrangement. We deeply appreciate her interest and that of her senior managers, and I assure her that we intend to provide statesman-like input so that we can all function much more efficiently than perhaps we have in the past.

Prior to joining the Department of Energy, Mrs. Clusen was National President of the League of Women Voters. She formerly served as an international environmental consultant to the State Department and was a consultant to the Department of Interior, Conservation Foundation, the U.S. Chamber of Commerce, and the Wisconsin Department of Natural Resources. She is very much committed to the preservation and, in fact, the enhancement of the environment. Those of you who have had an opportunity to look at the inside front cover of the dedication brochure will be able to get some insight as to how Mrs. Clusen views the national objectives of producing energy and yet remains concerned about preserving the environment. I think this is a very important and admirable stance, and we all pledge our support in any way that we can to help the Department of Energy and Mrs. Clusen meet these important challenges.

• • • • •

This laboratory is important. Not just because it is the Department of Energy's largest environmental research unit. Not just because it cost a lot of money. The laboratory is important because it will help provide answers to the tough problems that surround the paramount question facing us Americans at home today:

How will we meet our energy needs while improving or even maintaining the present quality of the air we breath, the water we drink, the soil that provides our food and fiber?

That question — however phrased in many ways-- does not astonish anyone today. There was a time when it would have. Public opinion has made gains in the last quarter century.

Dr. Edward G. Struxness must have asked himself a similar question when he was developing the ecology program here in 1953. As head of the radioactive waste disposal program, he was concerned about adverse effects of such waste upon living things and their environment.

The following year Dr. Auerbach was hired as the Health Physics Division's first full-time ecologist. After developing a unit, he was moved to the Jugset Hut. One of the jobs given him was to start planning a suitable laboratory to replace the Jugset Hut. After many permutations and much planning, this building has emerged.

One of those people involved in the planning was the late Dr. Daniel J. Nelson for whom this auditorium is named. It was Dr. Nelson who insisted that this building become a working

demonstration of energy conservation in its design and construction. And so it has become. I understand that a large fraction of the costs of heating, cooling, and lighting will be saved as compared with ordinary construction. DOE thanks everyone involved for that. And so do conservation-minded taxpayers.

At one point in the planning, Dr. Auerbach had wanted a circular laboratory. His "round building," he has written, was an attempt to counteract the tendency of scientists to work in solitude. He put it this way: "No corners, and the scientists can always interact."

Times and bureaucracy worked against the round building. But even when this more conventional laboratory was approved, Dr. Auerbach sought to adapt it to his concept. Corner offices in this building are occupied by supervisors--not for the sake of prestige, as is the wont of Washington bureaucrats, but to keep the scientists from burying themselves. Round or not, you can't corner them here.

Neither can one corner the stuff of science, the samples from the field. The building is designed to permit the flow of work--specimens to laboratories or greenhouses to data to computers to publications and out to the users.

So, it is indeed a marvelous building designed to produce marvelous things: Ideas, facts, knowledge that we decision-makers in Washington, and innovators elsewhere, can put to use.

Eventually, everything done in a laboratory is put to use. "Laboratory" is derived from the medieval Latin word for workshop (laboratorium). To some that would connote a place of solitary concentration and production, particularly for artisans and, later, for scientists. It is a place for lonely but rewarding work. All thinking human beings need quiet, solitude to produce. But artisan and scientist also need interaction with the world and its creatures in order to produce.

In the world of pure and applied research there is room for both the solitary scientist and the one who communicates with his fellows. Within this building work those of many disciplines, physics, chemistry, mathematics, to name but a few. And within a short distance, right here on the Oak Ridge Reservation, are other professionals.

The Reservation itself, with its flora and fauna, is another extension. The laboratory does not stop at the walls of this building.

A start has already been made towards the concept of a complete or total environmental laboratory. You have many of the components here. I congratulate you on having come so far. But I would also challenge you to go farther. I would offer the following: A laboratory should be more than a collection of researchers, buildings, land, problems. It should have a research plan and public involvement. The public must understand our rationale for research. They should be informed in such a way that they understand and trust scientific decisions. This is a big order and requires a special expertise, but the complete laboratory must involve this kind of activity.

The Department of Energy has a program that fits that concept. Unfortunately, a National Environmental Research Park has not been established here, although there has been talk of it for about five years. Application has been made, but action has not been forthcoming from Washington. I learned of that shortcoming while preparing for this dedication.

I wish I were able to announce today that a National Environmental Research Park has been established. I cannot do that. I can, however, say that work has been accelerated and that an action memorandum will be submitted soon to the Under Secretary for his approval.

The research parks actually are field laboratories set aside for ecological research, for study of the environmental impacts of energy developments. Through them and the knowledge they produce, the public can be informed of the environmental and land-use options open to them.

Oak Ridge National Laboratory has been a leader in environmental research in this part of the country. It and Oak Ridge Associated Universities have provided opportunities in collaborative research and training to hundreds of faculty members and students in a wide range of scientific and engineering disciplines. These efforts have transferred research ideas to colleges and universities throughout the country.

Thus an environmental research park here would further the efforts that already have had such great success.

The research park concept sprang from a report to the President titled, "The World Environment in the Light of Population Increase," and from the National Environmental Policy Act of 1969. The NEPA, of course, is the steering wheel in my Office of Environment within the Department of Energy. Fulfilling the mandates of NEPA will steer energy technologies through the traffic of environmental hazards. If the trip is negotiated carefully, our society benefits--improved health and safety, increased and innovative sources of energy, and economic wellbeing.

The car--it has been brought to my attention--is a good analogy for environmental research. We in DOE have a great many experts working on separate parts--carburetor, transmission, electrical system, differential, and so forth. But until attention is paid to the whole picture--the car--can we hope to build one?

And that is what our goal is here--to understand the structure and function of ecosystems so that if a technology or development is introduced we can predict its effects. In other words, how our car will behave in traffic in the real world.

Once a hypothesis is developed in the laboratory, the scientist can check it in a growth chamber or greenhouse or microcosm or in a simulation model. The final testing ground, however, for things biological is the outdoor environment--the outdoor laboratory. This is especially true for those things that are subtle and a long time in happening.

So the laboratory--this building, the land out there--will prove, or disprove, the environment controls that are the reason for the existence of the Office of Environment.

You, the women and men of the Oak Ridge Environmental Sciences Laboratory, are important to us in DOE. I'm sure we don't tell you that often enough. I'm grateful for this occasion because this dedication gives me a chance to thank you firsthand for your efforts and your work. You have a fine place in which to do it and we are glad you have it. The nation will--because you are here and using this Environmental Sciences Laboratory--be grateful, too.

REMARKS

Robert Rabin

Steven R. Reznek

REMARKS

Robert Rabin
National Science Foundation
Washington, D.C.

DR. RICHMOND: I would like to point out in this portion of the program that on the back page of the dedication brochure there is a picture of the ceramic mural which is located on the side of the new building. This mural depicts the environment and all living things, and I am particularly proud that in a large, modern research organization that is heavily involved with engineering and technical activities of so-called hard sciences we can indeed conduct a viable, useful program in the life sciences. Mrs. Clusen referred to the automobile in the sense of putting it together to make it work. This is a key concept, obviously, in the ecological sciences and many of you again are all very familiar with this holistic approach. I should point this out, it is a key word, not just a buzz word, it's a key word. We try extremely hard to use the holistic approach in our attempts to address problems related to energy technologies. It's a very key concept.

I would now like to introduce some of our distinguished guests who have also taken time from their very busy schedules to be with us this morning. The first person scheduled to be on the program, Eloise Clark, could not be here and we are very fortunate to have with us the Senior Scientific Associate who is also the Special Assistant to the Director of the National Science Foundation who will share some comments with us this morning. We introduced him earlier, Dr. Rabin from the National Science Foundation.

* * * * *

I am particularly pleased to be your guest at this dedication, since I have had both a professional and personal interest in your efforts. I convey warm greetings from Dr. Richard Atkinson, Director of the National Science Foundation, and from Dr. Betsy Clark, whose place I take on this program today. At this hour, Dr. Clark is testifying before the NSF's House Authorization Subcommittee. She very much regrets missing the chance to share this occasion with Stan Auerbach, Chet Richmond, Jim Liverman, and the men and women who are guests here and the members of the Environmental Sciences Division.

The National Science Foundation and "the Ridge" founded a continuing relationship in 1969 when Dr. Auerbach became project director for the Eastern Deciduous Forest Biome of the U.S. International Biological Program. Oak Ridge National Laboratory coordinated the efforts of many investigators in a systematic effort to qualify and quantify the functions of the eastern deciduous forest. Teams of field and laboratory scientists, mathematicians, and computer experts explored macro- and micro-scale relationships of carbon, biomass, water, and nutrient cycling. Models were designed, scrapped, and rebuilt from work at Coweeta, Triangle, Lake Wingra, Lake George, and here at the Oak Ridge site.

The efforts and results generated $8 million in support through Fiscal Year 1974. The money also provided for the administrative services and a biome information bank centered at ORNL. The mobilization of resources for the U.S. IBP work, exemplified by the Eastern Deciduous Forest Biome, catalyzed the emergence and maturation of the area of environmental science we call ecosystem studies.

During this period ORNL also assumed a national leadership role in basic and applied studies on heavy metal pollutants in soils, streams, and air. The National Science Foundation Trace Contaminants Program provided about $3 million for interdisciplinary work in which Stan Auerbach, Bob Van Hook, Dave Reichle, and their colleagues were prominent and successful.

As IBP phased down, the middle years, 1975-1977, marked the transition to the post-IBP generation of smaller research projects and an emphasis on integrating the IBP data. Recently, we have seen the addition of large numbers of investigators to the general competition for funding in Ecosystem Studies; personnel of ORNL are among them.

The projects led by Drs. Bob Gardner and Hank Shugart on methods to improve system simulation and analysis, by Dr. Jerry Elwood on nutrient cycling and transport in streams, and by Drs. Frank Harris and Jerry Olson on the global carbon cycle are at the forefront of modern research in environmental science.

These projects result from special attributes of this organization. They include (1) a critical mass of scientists who work well in an integrated research mode, (2) the special nature of the DOE reserve that allows onsite performance of some types of laboratory and field experiments that would be impossible elsewhere, and (3) the ability of this campus to be a focal point for special training, use of unique facilities, and integrated research coordination for a sizable community of academic institutions.

We at NSF salute you. Your accomplishments are internationally recognized. In the IBP effort alone, you are primarily responsible for the production of at least five major volumes and about 350 individual papers in the open scientific literature.

In dedicating your new facilities, we wish that your work continues to represent the best in the tradition of "the endless frontier."

REMARKS

Steven R. Reznek

Acting Deputy Assistant Administrator
for Energy, Minerals, and Industry
Environmental Protection Agency
Washington, D.C.

DR. RICHMOND: At this point I would like to mention one point that might not be obvious to some of the working scientists in the audience. You might wonder why we conduct R&D programs for various agencies. Congressional mandates are such that the various agencies are required by law to expend their resources in certain areas under certain conditions. One of the challenges of research management is to look at the institutional mix required to have a very useful and viable program and the resources available via the government agencies, mixing these in such a manner that you have a strong viable institution and the research team and resources you need to solve a problem in its entirety. It is especially encouraging to me that I think we see more and more involvement at the Federal level among the various agencies recognizing the capabilities of R&D organizations consistent with their Congressional mandates. And I think we are seeing the evolution of a very healthy attitude in terms of multiple support of programs at some of the large universities and large national research facilities.

The next speaker is from the Environmental Protection Agency. He is Dr. Steven Reznek who is the Acting Deputy Assistant Administrator for Energy, Materials and Industry.

* * * * *

Thank you. Mrs. Clusen and distinguished visitors. I'm very glad to be here this morning. When you come to a dedication like this and sit on the podium you think back about some other times you have been down here. I realized that one of my first assignments in EPA many years ago was to come here with Dr. Rabin for a program review of Stan Auerbach's program. I have been down many times since. While I was reminiscing, I went a little bit further back and thought of some advice that one of my professors gave me just as I graduated. He said, "as you go through your career, let me give you one piece of advice. Never get involved in building a building." Obviously Stan did not have the same professor as I did. I think I have been tangentially, even directly, unfortunately, involved in building some new facilities along the way and I appreciate the number of headaches that Stan has had bringing this all about. A ten-year generation period, someone remarked, is certainly a long time.

Since I have a little more time than was originally scheduled, I would like to digress and talk a little about the energy/environment crunch. Mrs. Clusen mentioned that the Federal Government's package to deal with the short-term crunch and the short-term allocation problems is going over to the Congress today. Another thing that happened today, as you have all probably heard on the morning news, was the announcement by Venezuela that they are going to follow the 15% price rise that the small Middle Eastern States initiated. The fact that we are running out of cheap oil and gas certainly means that we are going to have to produce and be dependent upon more expensive energy supplies - more expensive in any sense that you want to talk about them. The input of capital and labor is going to have to be greater to produce the same numbers of useful Btu's. Our society is just becoming aware of what that will mean in terms of the necessity to live with decreases in overall production. In the next five to ten years, these kinds of problems are going to become increasingly serious. They are going to involve us all. The shortages in the industrial sectors are going to be a dominant theme of western society over the next decade. The price increase, possibly a factor of ten, in going from oil and natural gas, which used to come out of the ground fairly easily, to these new fuels that take a lot of work and sweat to pull out of the ground, is not the only cost. The new fuels will be more expensive in their production costs and in the costs to our society of their impact on our basic capabilities for agricultural production and for sustaining public health. The pollutants associated with these new fuels could, if uncontrolled, forever remove land from production, lower air and water quality so that we lose our basic ecosystems, and seriously affect public health. These costs, the nonmarket costs, could be as great as the market cost increase associated with the

production of the fuels. The challenge for all of us is to understand the nature of these nonmarket costs and to commit ourselves to actions which will allow decision-makers to make wise and proper choices about the balance between the fiscal cost of energy and the degree to which we are willing to tolerate the nonmarket ecosystem and public health cost. This philosophy of commitment to the basic data scientific tools that are necessary for wise decision-making was integrated both in the Department of Energy and in the Environmental Protection Agency at the time of the original embargo. We recognize the very desperate need to develop alternative fuel sources, but at the same time we also need to understand the nature of the environmental effects that are associated with them. We are committed to a program that has and will continue to produce those answers. This laboratory will continue as a major and integral part of that program. The philosophy of cooperation between the agencies charged with energy production and those charged with environmental protection was incorporated in these early programs and continues today. Everyone's goal is to have as rational and sensible an approach as possible. Our society is beginning to feel that tightening grip of its dependence on energy systems. Our ultimate goal must be to generate the type of information that will be used by energy decision-makers - be they at the local level siting facilities, at the state level developing regional energy plans, or at the Federal level writing emission standards on energy technologies.

Let me now touch on some of the areas of environmental protection that we think are most important. We anticipate that in the short term, of course, we are going to see vastly expanded coal production, and most of that coal over the next 10 to 15 years is going to be burned in conventional combustion facilities. Coal production is going to increase in the traditional coal fields of Appalachia, continue in the central coal providences of Indiana and Ohio, and expand enormously in the western coal fields. The immediate problems of coal mining are water pollution control and land reclamation. These issues vary considerably by coal providence and by actual mining site. They vary by coal mining practice, soil chemistry, and surface or underground hydrology. The unique character of the local environment must be incorporated into any particular mining plan, and the insight that is gained by the ecological sciences should be part of the development of these mining and reclamation plans.

In the more heavily polluted parts of the United States, the heavily industrialized areas, the increased coal use is an air pollution problem. We need, of course, to switch from oil and natural gas - the clean fuels - to coal in these areas. Many of these areas are having a great difficulty maintaining air quality standards. Sulfur in its aerosol forms is the most important problem. Nitrogen oxide also contributes its share, but as yet its role in the development of an acid aerosol is not all that well understood. Here again, we need to understand the rates of formation of the acid in the atmosphere. We also have to understand the effects on the ecosystem when the acid and the sulfur are deposited. We heard a little bit this morning about the question of some of the most sensitive parts of the ecosystem such as the unbuffered lakes of eastern Canada and of Scandinavia which are already responding to this acid deposition.

Another area that is going to be subject to environmental pressure is the coastal basin. Drilling operations on the east coast have not been very productive at this point; however, we are going to see expanded drilling both in the Gulf Coast and off the west coast of Alaska. In these areas, we need to understand the various pressures on the ecosystem, the effects of drilling and oil spills on the productivity of the fish and other marine organisms. These marine organisms will not only see the continued pressure of oil development, they will also see continued pressure as sources of food for man.

In the long term, beyond the next 10 to 15 years, we are going to see the development of synthetic fossil fuels in the United States. We are going to be producing large quantities of pollutants and chemicals. We now only vaguely understand what these pollutants are or what their environmental effects may be. These include carcinogenic materials, organic complexes of metals that are produced by these gasifying or liquifying reactions. Our challenge will be to understand how these pollutants are formed and then to incorporate an ecological understanding to setting sensible, economically achievable bounds upon their release to the environment. Ecology as a science must advance to the point where it can and will have a meaningful input to the decision-making. The decision-making goes from the immediate questions of plant siting and construction, configuration of plants and cooling systems, to the more general question of what types of energy systems should be favored. Of particular concern is how the evaluation of ecological damage can be incorporated at the national, regional, and local levels, into overall decisions about energy supply. The field of ecology has made tremendous advances into turning the kinds of understandings that are developed by examining toxicity on single species and the interaction of the species in the ecosystem into tools that will be used in managing energy development areas. These tools can be integral in making a decision on such questions as siting individual plants or setting constraints on the operation of those

plants through emission regulations for the control of either pollutants or heat. The Environmental Protection Agency is becoming more involved in the national program for the ecological research. We have a small but an integral part of the responsibility for the programs that will be funded at Oak Ridge. We look forward to that very much. We know that this question of ecology and environmental decision-making has now matured to the point where one does not have to reserve the kinds of scientific efforts across the country to one or to another agency. Cooperative programs and cooperative uses of our national scientific resources, such as this one, will be a growing theme in the future. More and more our agency and other agencies will be using the types of expertise, knowledge, and skills that have been developed here. We look forward to that a great deal.

In conclusion, I hope that the dedication of this new research facility will serve to help us solve environmental problems and turn the knowledge that we are developing of ecosystems and ecological responses into better solutions of our society and our economy in the coming years. Thank you.

COMMENTS

C. R. Richmond

S. I. Auerbach

COMMENTS

C. R. Richmond

The comments of the last speaker reminded me that I should make a plug at this point. We have heard a lot about national needs, national resources, and our energy situation in this country. And research management also has to be in tune with changing needs. Last year we organized the first annual Life Sciences Symposium here at the Laboratory. The objective of this series is to mix people from many disciplines — engineering, analytical chemistry, biology, and various forms and parts of biology — people in the environmental sciences, and bring them together to use their total resources in solving problems. The topic of our first symposium last year, last September, had to do with coal conversion. We wanted, early on, to become heavily involved in the life sciences with the development of a so-called new energy technology. That particular meeting, we think, was very successful because we brought together people from the academic communities, the national laboratories, and the various industries involved, and people from the government agencies in Washington who have responsibilities for the development of these systems. The idea is to make people uncomfortable. Not to have the traditional meetings where biologists talk to biologists and chemists talk to chemists and economists talk to economists. We think this is an extremely useful approach and it's a way of mixing three major components into any system.

Historically we have worried about technical feasibility of a modern technology, be it something related to energy production or not. The second ingredient is economic viability. These have been the two traditional concerns, again technical feasibility and economic viability. What we are learning to do now as a nation, I think, is to introduce a third partner in this troika arrangement, and that is environmental acceptability. These three are important coworkers in the development of a technology. This September, in Gatlinburg, we will hold our Second Annual Life Sciences Symposium. We will address the sulfur problem mentioned by Dr. Reznek, starting from sources, transport, transformation, and effects both on plants and animals, including a session on beneficial aspects of sulfur, and I am told that there are some. So this, again, I think is an indication of how a large R&D organization can marshall its capabilities on an interdisciplinary approach to tackle these very difficult problems. At this point I would like to turn the program over to Stan Auerbach.

COMMENTS

S. I. AUERBACH

Thank you, Chet. Before we get into the next phase of the program, I do want to make a few more personal announcements. I want to welcome some academic colleagues who came in a little late. Representing the University of Tennessee is Vice Chancellor Dr. Walter Herndon with whom we have had a long association; and representing Tennessee Technological University are Dr. William Willard and Dr. Robert Martin, both old friends of ours.

I appreciate the kind words that have been said about me in respect to the formulation and gestation of this building. Actually, the implementation and successful creation of such a structure involves a great many people whom I am perhaps fortunate to be the symbol thereof. But in particular there is one individual who enthusiastically joined my campaign some years ago, and who, convinced of the need and justification for this building, worked for it, and then, when he went on to Washington, took it upon himself to help us make this building a reality. I want to give a particular vote of thanks to Dr. Jim Liverman; Ruth has already said so, but I wanted to pass on my own personal vote of thanks.

At this time, we were scheduled to have a planting of an environmental grove outdoors, but unfortunately the weather has wreaked havoc with us; however, there is no reason why we can't do it indoors. We are going to miss something though. When we thought about this, about six or nine months ago, we scheduled it to start at 10:15 a.m. and end at 10:30 a.m. We looked at our almanac and we knew there was going to be an eclipse of the sun starting at 10:30 a.m. Of course, what I had prepared to do, as the trees were being planted and as the sun was starting to disappear, was a "Marrying Sam" version of Cas Walker imitating Will Rogers' incantation in the 1932 movie "The Connecticut Yankee." You aren't going to see that so I'll have to deal with it much more personally.

Seriously, the four trees that are to be planted out there are national emblem trees. They were brought here from Mt. Vernon some months ago. The national emblem tree is the tulip tree, Liriodendron tulipifera; it is also the State Tree of Tennessee. Planting this species of tree has more than that simple kind of state and national symbolism for us here in the Environmental Sciences Division, and I want to indicate why. The tulip tree was, and perhaps someday will be again, the most magnificent hardwood tree in eastern North America. Back in the Nineteenth Century, and certainly in the Eighteenth Century, East Tennessee, the southern Appalachians, and parts of the eastern United States were graced with giant forests of these trees covering many square miles. The trees routinely reached a height of 200 feet, making them the tallest hardwood tree in eastern North America. Their diameters were eight to ten feet and there are still some vestiges of them in the Great Smoky Mountains National Park and in the Joyce Kilmer National Forest on the borders of North Carolina and Tennessee. Here in Anderson County there were large forests of these trees, and there still are pictures you see here and there of the lumbermen standing beside some of these mighty giants that they had felled. Paradoxically, many of the cuttings of these trees were used to shore up the coal mines which were then going strong in this part of East Tennessee. So, this tree is really symbolic of much of eastern North America, and I think it has been recognized as such by being the national emblem tree taken by the President to England and planted there.

Now, why is it of a particular significance to us? As most of you know, this program began with the mission of examining the effects of radioactive materials on the environment, particularly radioactive materials derived from radioactive waste disposal. In the early years of our field experiments, one of our goals was to apply some of the new developing concepts in ecosystem ecology to this challenge. Part of the question that we were attempting to address was the prediction of the rates of movement and fates of long-lived isotopes, such as cesium-137, a common waste fission product, once they entered, in this case, the terrestrial environment. To address this question in more quantitative and rigorous terms, we designed a field experiment in which we tagged a grove of trees, tulip poplar trees, with various quantities of cesium-137. The amount emplaced in each tree was proportional to the biomass of the particular tree so that after the experiment had been underway several years we could sample aspects of leaves, twigs, and roots, and assure ourselves we could get readily detectable and measurable quantities of the radionuclide. This experiment involving the tagging of a tulip poplar grove, or forest as we call it, came to be known as the cesium forest. It was our first attempt at integrated ecosystem analysis and one that proved to be highly successful; one that led us down the road toward integrating ecosystem approaches that soon won us a reputation among our colleagues in the country and one which really led almost directly to our being offered the

opportunity to lead the Eastern Deciduous Forest Biome Project of the US/IBP. So the tulip poplars in these groves represent symbolically our first major experiment and something we wish to be reminded of. They also have another function, one that will certainly transcend my term here and most of yours as well. There is another problem associated with occupying a new building. It has often been stated that when you move into a new building, the new building doesn't represent a new building, it represents a mausoleum, and what goes on is more typical of what occurs in a mausoleum. The environmental grove is going to be there to remind you otherwise, and it has a special significance in this respect. I think it was well said in the words of Donald Culross Peattie, the great American naturalist, who wrote in his Natural History of North American Trees about 30 years ago the following words:

> "But, despite the splendor of its dimensions, there is nothing overwhelming about the Tuliptree, but rather something joyous in its springing straightness, the candle-like blaze of its sunlit flowers, in the fresh green of its leaves which, being more or less pendulous on long slender stalks, are forever turning and rustling in the slightest breeze; this gives the tree an era of liveliness, lightening its grandeur. So even a very ancient Tuliptree has no look of eld about it, for not only does it make a swift growth of youth, but in maturity it maintains itself marvelously free of decay."

This grove will always be there, looking youthful, as a reminder to you of the way the program should always be in the years ahead. Thank you.

PERSPECTIVES IN ECOLOGY

Part I

John E. Cantlon

Frank F. Hooper

Eugene P. Odum

THE INSTITUTIONAL CHALLENGES FOR ECOLOGY

John E. Cantlon
Vice President for Research and Graduate Studies
Michigan State University
East Lansing, Michigan

S. I. AUERBACH: This afternoon we start the scientific part of this dedication, and, as was alluded to this morning several times, buildings and programs such as these are the result of the efforts of many people. The speakers who are going to be talking to us this afternoon and tomorrow all have had a role, either as direct participants or as indirect participants, in shaping what is now the Environmental Sciences Division at Oak Ridge National Laboratory. I think that is something that those of us who are developing our own careers and programs have to continue to bear in mind. Getting input from others that is timely to the questions you are trying to work with can give you guidance, insights, and perceptions that are pertinent. All of these individuals have played some kind of role. I will endeavor in my introductory remarks to give you some idea of what each has done in the past in relation to our program.

The talks this afternoon are relatively informal. We advised the speakers that after they are through, there will be time for questions and answers. So please feel free to ask questions.

Our first speaker is Dr. John Cantlon who is the Vice President of Research, formerly the Provost, of Michigan State University. John can sometimes be described as an ecologist's ecologist and I will tell you why. He is a man of extraordinary perceptions of the role of ecology in society and in organizations, - its strengths, its needs, and its weaknesses. If you look out in the cabinet in the lobby, you will see a newspaper article, dated 1961, on a meeting of a committee on chemical cycles in ecology which the Ecological Society of America initiated in 1959. John was instrumental in starting to push it; Jerry Olson was involved in pushing it; and some of the rest of us got involved from the point of view of beginning to see the need for that type of work. One of the concerns that John had, and he and I talked about this, was how was the plant ecologist of that time, whose knowledge of chemistry -- particularly soil chemistry -- physics, and mathematics was almost minimal, if it existed at all, going to tackle what we saw coming as the need to look at ecosystems, plants composed of ecosystems in the context of what agronomists had been using for the previous 40 or 50 years in their approaches to plant/soil interactions. I don't remember the result of our deliberations, but I guess we encouraged enough people, because plant ecology today is considerably different than it was, at least in a number of institutions. John's role here at the Laboratory has been a significant one, although not necessarily an apparent one. He was one of the early members of our Division Advisory Committee, wherein he served along with others who were trying to illustrate what ecology was to a laboratory management which admittedly was interested in what ecology is, but really didn't quite understand it. Laboratory management needed individuals who were articulate and who could interpret what ecology was and why it was needed at a national laboratory. Subsequent to that, John was invited to join our Management Advisory Council which is the committee that reports to the President or the Nuclear Division and which works with the Director of the Laboratory in looking over the whole laboratory program and not merely the Environmental Sciences Division or its predecessor, the Radioecology Section of the Health Physics Division. Again, in that role, he played a key part in providing to the highest management level the kinds of needs, the interest, and the importance that this kind of discipline and its related components can provide to this type of institution, the national laboratory. And so it is with great pleasure that I introduce to you, Dr. John Cantlon, who will talk on the "Institutional Challenges to Ecology."

* * * * *

Throughout the 19th century, ecology was a very modest piece of natural history and of very little concern either to most decision-makers or to the small intellectual communities in the universities of that day. By the beginning of the last quarter of the 20th century, ecology had

become a significant discipline in joining the physical, biological, and social sciences. Its principles and paradigms have become important in how we think and act about such matters as human health, resource management, agriculture, evolutionary change, and technological development, and have become important elements in our concern for man's place on the planet earth and in the universe.

It should come as no surprise, therefore, that broad institutional challenges have emerged for both ecology as a discipline and for ecologists and related practitioners of the discipline. These institutional challenges cover the full gamut of human social organization: from the nuclear family to world governmental organizations — from academic departments to federal executive agencies — from narrowly self-interested industrial cartels to governmental regulatory bodies or religious orders.

It should further come as no surprise that most of these organizational questions have not been resolved in 1979. As a long-time warrior in the halls of academe, a some-time advisor to federal agencies, national academies, industry, and professional societies, I would be less than candid if I suggested all these organizational questions will be resolved or disappear in the near future. Probably more accurately, they will evolve into related problems and man will continue his rewarding struggle, hopefully addressing and resolving more substantive questions in the process.

This remark reflects, I hope, my general bias which should be clearly stated; i.e., organizations, per se, are unimportant even though the functions they perform may be absolutely crucial to man's continued well-being. My willingness to accept the topic Stanley Auerbach asked me to develop stems not so much from my perception of the intrinsic value of the institutional and organization questions that face ecology as from the insights we may achieve by asking useful questions from this perspective.

As I've laid out a framework to explore, and have cautiously stuck a toe into the dark intellectual waters that underlie these institutional matters, I've become painfully aware of my limitations of training, experience, and even of time for developing these matters into more useful starting points for discussion. I commend the topic to others who have more time and better qualifications to develop it into a more useful product.

A series of questions might usefully be posed to get the right array of intellectual juices flowing before we address the specific organizational and institutional challenges that face ecology. To reduce redundancy I have not always closed each of the following 16 questions with the central thematic focus: namely, what *institutional* and *organizational facilitation* exists in each area and how can it be improved? Some useful questions are:

1. How good are the paradigms with which ecology operates today? Are they adequate as bases for federal legislation; e.g., is ecosystem stability really related to species diversity? What is the quality of the evidence for this and is the paradigm adequate for citing as partial justification for an Endangered Species Act or a National Environmental Protection Act?

2. How does the well-informed citizen's view of "ecology" and of "environment" overlap? In addressing toxic substances in the environment, what are the general public distinctions among human health effects, economic effects, and ecological effects?

3. How should the professional ecological community, either individually or collectively, address ecologically incorrect statements or testimony either by narrow-minded, hard-line technologists or by seemingly paranoid environmental activists?

4. What appears to be the future of environmental or ecological consulting firms and how good is the training of the present professionals they employ?

5. What is the relative frequency of ecologists among the members of the U.S. National Academy of Sciences compared with other disciplines? Is it close to the ratio of significant ecological papers in scientific magazines of broad coverage such as AAAS SCIENCE?

6. Is there a need for a national and a world ecological survey comparable to the U.S. Geological Survey? If so, what would be their missions and priority assignments?

7. What are the ethical and value questions for man that are rooted in ecological understanding and insight? How well are these currently integrated into the learning of

values by U.S. citizens through family example? through K-12 education? through religious organizations? and how ecologically sophisticated are our colleagues in the arts and humanities?

8. What was the quality of ecological sophistication of the average bachelors degree graduate in 1978? Was it better than it was a decade ago? Is it improving? What instructional processes work best to improve ecological understanding of college students?

9. Are U.S. industries and the trans-nationals becoming ecologically more sophisticated or are they simply responding to environmental regulation? Are there advantages to important industries if they become ecologically sophisticated? Who might design and deliver useful ecological workshops for corporate leadership?

10. At the world governmental level is there any special merit in having a high level of ecological awareness among the executive officers and their staffs?

11. What is your perception of the level of ecological sophistication of key U.S. Congressional committee staff? Or key state legislative committee staff?

12. As ecologists, would you be comfortable if the Endangered Species Act, the National Environmental Protection Act, and the National Clean Air Act were repealed and those responsibilities delegated to the 50 states?

13. Are urban and local governments ecologically aware? On what resources of ecological expertise can they draw? Are organizational networks emerging to meet this need? What is the quality of their advice?

14. Of the major challenges man is likely to face in the next 100 years, which have strong ecological content? Are there basic and applied research programs proceeding that might shed light on these questions? Whose responsibility is it in the United States to fund, manage, and assess long-range, large-scale ecological research?

15. What are the priority basic research questions in ecology? Are basic research funding levels adequate? If so, are there limitations related to scientific personnel, management, instrumentation, monitoring, analysis, or what?

16. Of the disciplines which contribute to ecological research, where is transdisciplinary communication the weakest? e.g., with plant and animal physiology? with basic mathematical and statistical research? with genetics? with geochemistry? with economics? with management theory? with the human behavioral and social/political sciences? with engineering? What organizational and institutional steps might facilitate progress?

One could extend this list of questions, but I've served the purpose intended and will now develop the subject of institutional challenges under six topical headings: big ecology and little ecology, university-federal relations, ecology in the federal government, international ecology, professional societies and other national organizations, and ecology in value-focused organizations.

LARGE MULTI- AND TRANSDISCIPLINARY PROJECTS AND LITTLE ECOLOGY RESEARCH

The International Biological Program which started just over a decade ago included some major ecosystem studies. The assessments of the outputs of these large multidisciplinary studies have been generally bimodal, clustering around charges of low cost-effectiveness, low output of new scientific results, and failure to meet specified goals on the one hand, and on the other hand, generally high marks by individuals who participated in or planned these studies. Reality is probably a mixture of both assessments but, in my judgment, is certainly closer to success than to failure.

One of the institutional challenges ecology faces is finding appropriate homes for cost-effective, fruitful, long-range, large-scale experiments. Appropriate institutional candidates include: the national laboratories; the biological stations, especially the NSF-identified ecological research preserves; federal agency field stations such as the U.S. Forest Service, the U.S. Grazing Service, and the National Park Service; and Marine Research Stations, both federally and

university-affiliated. Each of these institutions could serve as homes for this complex and demanding kind of research.

In my judgment, the old AEC national laboratories are by far the best sites for high-quality, multidisciplinary, large-scale, ecological research. Oak Ridge has been responsible for and contributed personnel to many of the very best studies. The Eastern Deciduous Forest Biome studies of the IBP, operated out of ORNL, were some of the best. The national laboratories' preeminence at being able to direct or manage complex research teams toward agreed-upon objectives is one reason for their preeminence. However, not all laboratories with this authority use it, and many fail to rigorously assess the quality of their work product or personnel. Oak Ridge National Laboratory has an excellent record at these matters.

Poorly represented in these potential management organizations are real opportunities to do long-term research in landscapes which include a myriad of essentially unregulated human activities. For example, experimentation with more efficient regional energy patterns and particularly studies which inquire into the aggregate impacts of individual and collective decisions in energy, land use, water use, etc., are challenges not yet well addressed experimentally. Appropriate institutional homes for identifying these kinds of experimental questions, for locating regions willing to participate, for finding the array of specialists needed to harvest the appropriate assessments, and for providing the demanding managerial skills need attention.

It is only fair to observe that federal agencies have met with Congressional resistance when requesting funding for studies in which human behavior and human values are examined. If a proposed project appears to have a component which might modify human values and behaviors, it is even more difficult to find either funding or a management institution.

Within large interdisciplinary study groups the search for common language and substantive communication is a painful, time-consuming, and only partially successful process. I have served marginally or centrally in such groups for over 25 years and make the observation that a general level of understanding is relatively easy to achieve, but a level that permits state-of-the-art articulation of two or more disciplines in joint research is very difficult and, in some cases, seems totally illusive. We need better institutional mechanisms for strengthening this process.

I am cheered by the impact that tough regulatory decisions by federal and state agencies are having in forcing assessments of the communications and research gaps among such diverse fields as toxicology, ecology, epidemiology, economics, anthropology, and management. This is a task that is unlikely, I believe, to be solved in any final sense. Rather, it will be addressed with more frequency and sophistication in more complex settings with increasing demand for rigor in the communication.

In my judgment, there isn't enough national attention to this problem by specialists in communications and decision theory. The potential for payoff here in better understanding and better decisions is probably greater than is generally appreciated. I think, also, that the American scientific establishment, which is heavily dominated by natural scientists, is overly inclined to minimize the potential contributions from improving human-focused social, behavioral, and economic research in ecological and environmental questions. Many establishment scientists tend to attribute this part of such problems to "value questions separate from science or fact questions." Since the ecosystems of which man is a part are tending over time to become more man-dominated, ecologists must learn how to pursue man's ecology more rigorously. The institutional challenge in this exists across the range of scales from interacting pairs to world governments. Let us turn now to "little ecology."

"Little ecology" is meant to infer not necessarily the scale of the ecological phenomenon being studied but the relative simplicity of the scientific crew committed to the effort. The institutional frameworks in which little ecological research is pursued cover the full range of institutions with ecologists. In my probably biased judgment, the best ecological research in this category is located in the universities. Bormann's Hubbard Brook study, MacArthur's and Wilson's studies of island biogeography, Hutchinson's and Edmondson's studies of lake biogeochemistry, and Saunder's and Cohn's studies of marine niche separations are all outstanding ecological research by university people. What are the institutional challenges to keeping the quality and quantity of little ecology proceeding apace?

Obviously, the first is the challenge to continue to recruit exceptional individuals into the field of ecology. Happily we are now benefiting from the recent popularity of ecological matters to young people and have more of the better minds attracted to the field than ever before. The institutional challenge is to ensure that these graduates will continue to move into scientifically productive

employment. This is going to become a major problem in the universities as student enrollment declines throughout the 1980s and the 1990s. Somehow we will have to make special provision to continue the flow of bright young ecological faculty into our universities. One way is to move more of us grey beards out to pasture. Unfortunately affirmative action has now filtered down, or percolated up is a better phrasing, to the over-60 crowd, and soon universities will be forced to continue to age 70 all who wish to stay. The tragedy is that the liveliest and most productive of the older scientists have the greatest temptation to retire early. This stems from the fact that they tend to have higher salaries than their slower-witted or less-productive colleagues and also have more opportunities for visiting lectures, consultantships, etc. Thus, the financial inducement is for the less productive to insist on staying in the university until age 70. Clearly, we will need to face this institutional challenge vigorously, and soon.

Another institutional challenge for little ecology is to maintain a broad array of research support opportunities for the gifted ecologist. I think the situation is better today than it was 25 years ago, but it can be even better. We need to expand and improve the quality of the extramural programs in many of the federal agencies that need ecological research to meet their mission goals. This will probably become more difficult in times of inflation as the nation's economy struggles to cope with the unsatisfactory trade balance created by importation of costly energy and other imports. Research support for small-scale, basic ecological research may become further strained as Congress and major federal advisory bodies counsel that more of the nation's R&D expenditure should be focused on enhancing U.S. productivity. In my personal view, there is as much potential contribution to national productivity from well-chosen ecological research as from many other fields. However, it will take some imagination and development to get credible lines of such research underway. Time constrains the development of this topic which I think warrants further attention.

The continued output of high quality "little ecology" can also be made more likely by making faculty research a rewarding experience in the university and by providing both the campus opportunities and the rewards for it. These will probably be more difficult in the worsening fiscal crunch most universities face. Between declining enrollments and shrinking student fee income, tightening up of state legislative appropriations in response to a pandemic proposition-13-like atmosphere and a reduction in the recovery by universities of real indirect costs because of new federal accounting regulations, there will be a tendency because of these matters to trim faculties, cut back on equipment-matching funds, and increase faculty teaching loads. All of these stresses will require imaginative institutional reorganizations to keep top quality faculty research at a high level.

Hopefully, universities may be able to persuade industry, the private foundations, and their alumni to ease part of the coming stress through more giving, but a central institutional challenge to little ecology will be the universities' capacity to adjust effectively to changed conditions.

INSTITUTIONAL CHALLENGES TO ECOLOGY IN UNIVERSITY-FEDERAL GOVERNMENT RELATIONS

I would like to treat this complex institutional challenge in two broad rubrics: first, to note the cracks and strains beginning to emerge in general university-federal government relationships, and second, to look specifically at the intramural vs extramural distribution of effort between federal agencies and universities. My entire time could productively be spent on either of these subtopics, but I will simply illustrate the challenges in both arenas and make a few suggestions. It is an area warranting urgent and continuing attention because continued healthy development of ecological research is probably as vulnerable as any of the disciplines, due to its association with an anti-technology bias in the minds of some people.

In looking at the present stress in university-federal government relations one needs both to put the matter into proper U.S. historic perspective and to compare the U.S. system with that of other nations. Oversimplifying, we can say that the present high level of federal use of university research capabilities is a post-WW-II development and more accurately a product of the two decades of the 1950s and 1960s. It is uniquely American in that a greater percent of the research needs of our federal agencies is provided by U.S. universities than is true of universities in other countries. In part, this stems from the American tradition of expecting our universities to address society's problems. Indeed, the U.S. land-grant university was an American invention flowing from the demand of the farmers and manufacturers of the 1850s and 1860s for institutions which would train specialists to address their problems and later to also provide the necessary research and help to deploy useful knowledge through extension.

Each of the 50 states as well as most of the U.S. dependencies has at least one such institution. In addition, there are 30 or so major research universities that are not land-grant institutions but which do actively solicit major research projects that address specific national problems. The land-grant universities get approximately as much research and extension funding from state legislative appropriations as they get sponsored research funding from the federal agencies. These state-supported efforts tend to be highly problem-focused. This mixture of private, state, and federally funded research, instruction, and extension developed its present composition substantially during the 1950s and 1960s. During that period there was a deep, underlying sense of commonality of purpose and trust between the participants. Then came the 1970s with the Vietnam War (fought on borrowed money), the campus revolts, the corrosion of citizen trust in federal government, the beginning of decline in student enrollment, the unionization of public employees, and the explosion of federal regulatory constraints on the university community. Coupled with this came broad populist criticism of the peer judgment system for allocating research grants, an insistence on institutional cost sharing, the Mansfield Amendment which focused on reducing research support to universities, and the imposition of an auditing philosophy patterned on federal purchase of hardware but one which fails to understand or to accept the realities of the academic work environment.

In short, the mutuality of trust has been strained severely. There emerges the very real danger that the federal government backlash against the universities may generate a faculty-student-state legislative counter backlash. I don't have the time to develop the details here, but let me note that when good research faculty members work 60- not 40-hr weeks, it's difficult to convince them they have cheated anyone when they have delivered 12% of their time instead of the 15% called for in the grant or contract. When universities are denied federal reimbursement for real costs incurred because auditors use rules ill-adapted for universities which typically have instruction, research, and service, all emanating from a single investment of time, the people who pay for this mandated allocation to the federal agency are students, whose fee costs already strain family budgets, and state legislatures, which would prefer to finance state, not federally chosen, problem solving.

The restoration of trust and health to this federal-state-university research relationship is urgent. It is especially so for areas of ecological research which require close interplay of these agencies in addressing needed experiments, inventories, and monitoring. I am hopeful that the recently established National Commission on Research will make some progress toward resolving these issues. However, I doubt that enough of its members adequately understand the problems of student fees financing government research, or adequately grasp the state legislatures' roles in these matters. Further, even among groups that ought to know better, e.g., among land-grant university representatives, we find situations where agricultural research leadership attempts to pressure their universities to forego the substantial indirect costs of research projects, forcing these costs to be picked up by student fees and by general legislative appropriations made for other purposes. With inflationary costs mounting, the trajectory we are on is clearly not sustainable. Our most urgent institutional challenge to little ecology is to prevent revolt among the participants in this crucial university--federal government--state government support system.

Let me switch now to the intramural-extramural matter and the university-national laboratory relationship. Again, this is a complex matter and my remarks are totally inadequate to its long-range importance. I would assert at the outset that, overall, a mixed intramural and extramural federal research system is clearly necessary and in the national long-range interest. Directed research within federal laboratories and agencies is essential to meeting agency missions. Additionally, some related undirected research opportunities are essential to keeping top scientists in the federal laboratories. On the other hand, universities offer the federal agencies several important supplemental features.

1. Better access to young, exceedingly bright, graduate research assistants. This talent pool, properly utilized, can in my judgment be the most cost-effective research expenditure by the federal government. Much of the innovation and insight coming from faculty researchers is, in part, a by-product of faculty working to stretch and challenge these young minds. I know many researchers who prefer the services of good technicians to graduate students when the faculty person is single-mindedly pursuing specific research objectives. When aggregating over a block of years and problems, however, the output of a research group that includes graduate students and young post-doctorates will, I believe, prove to be richer in perspectives on most problems.

2. Extramural research support for university faculty gives the federal government access to a much broader talent pool than it can afford to maintain in-house. In particular, the universities provide access to capable scientists in a broader range of disciplines than federal agencies, operating under tough personnel ceilings, are inclined to recruit for

in-house operations. Further, quite variable arrays of expertise can be assembled in university settings on a project-by-project basis. This leaves the agency free of long-term commitments to individuals -- a matter of significant economic impact as any manager of complex personnel operations will recognize. The USDA experience in the competitive grants area would be worth developing here if we had time. I will terminate this short list of advantages by noting that.

3. A capability that federal agencies could probably make more use of than they now do is the extension-research link in land-grant universities. At Michigan State University, for example, we have found that deploying applied ecological research as part of new integrated pest control strategies requires both expertise and credibility with individuals being asked to try new, unproven technologies. Our extension field people have been valuable in obtaining real-world assessments at low cost, the results of which then have broad public acceptance. Agencies in addition to the USDA need to develop experience with this and nonagricultural university extension systems.

Focusing now on some specific institutional challenges from the in-house extramural question we might note that in some federal agencies researchers in the national laboratories have become program directors dispensing and overseeing extramural grants. I believe this is in conflict with a healthy relationship between national laboratories and their university peers. Occasionally a laboratory staff member will publish research results that might suggest that ideas were borrowed from proposals that were reviewed but not funded. Even where this is not in fact the case, the relationship becomes strained. In my judgment, federal extramural research grants and contracts should be funded and supervised by units that are not directly engaged in research themselves.

University ecological researchers could probably benefit by greater use of national laboratories during sabbaticals, and Interagency Personnel Agreements could probably be used more extensively to rotate national laboratory ecology personnel into university research settings. Looking broadly at federal research, more of the professional ecological research done in national laboratories should be subjected to rigorous peer review of professional journals rather than being shelved as inadequately assessed internal reports.

Again, let me cut short this very rich area of institutional challenges to ecology by noting that the old AEC, now DOE, national laboratories have had a generally healthier give and take with university researchers than is true for most of the other federal agencies. While we can clearly improve and broaden mutually rewarding ecological research relationships, even between DOE laboratories and the universities, the room for improvement is much greater in EPA, NASA, the Department of Interior, and the USDA laboratories.

ECOLOGICAL AND ENVIRONMENTAL RESEARCH AND DEVELOPMENT BY THE FEDERAL GOVERNMENT

There is growing recognition that ecological and environmental R&D occurs across a wide range of the federal agencies and that some coordinative oversight might be useful. Congress has mandated that such a study be made. The Office of Science and Technology Policy (OSTP) has been directed to conduct such an assessment. The OSTP, in turn, has sought assistance from the National Academy of Science. Within the Carter Administration there have been explorations of the natural resources and environmental federal responsibilities with an eye to considering whether federal agency reorganization might be desirable and politically feasible. These are exceedingly important aspects of the institutional challenges for ecology and ecological researchers.

At the outset it must be recognized that all of federal ecological research and development cannot be aggregated into a single agency. Most agencies require answers to ecological questions in order to meet their mission responsibilities properly. Some agencies have such questions more central to their missions than others and some have stronger research traditions than other agencies.

For example, we might acknowledge that the Environmental Protection Agency and the Council on Environmental Quality have massive central ecological requirements in meeting their missions. The EPA is largely regulatory in mission, while CEQ is largely an oversight and assessment agency. The Nuclear Regulatory Commission has an environmental regulatory responsibility in a specific narrow field.

The Department of Interior, with BLM, USGS, OWRT, NPS, F&WS, and BOR, has major natural resource development, inventory, and stewardship responsibilities. The Department of Agriculture also has major natural resource development, inventory, and stewardship responsibilities, with some regulatory responsibilities as well. The Department of Commerce has a similar kind of responsibility for aspects of marine and atmospheric resources. In each of the above agencies, ecological research is essential to their inventories, prudent development, and stewardship responsibilities. The Department of Energy has energy resource and technology development responsibilities, but its obligation to have those technologies meet tough social, environmental, and ecological constraints requires major ecological research efforts. One could pose the same challenge for the Departments of Housing and Urban Development, of Transportation, and of Defense, and the National Aeronautic and Space Agency and could also note that the research tradition is not equally developed among these four. The Health, Education, and Welfare Department has major ecological responsibilities relating to human health, particularly in NIEH, FDA, and PHS. The U.S. State Department has responsibilities for international aspects of environmental and ecological matters and only a modest record of providing either support or leadership in these areas.

The Departments of Justice, Labor, and Treasury have ecological and environmental matters among their missions, but, they have not been particularly noteworthy in their ecological research.

I've left the National Science Foundation for separate treatment in that its mission is primarily to ensure a strong and healthy U.S. science program. Ecology and environmental areas of basic research are handled essentially the same as for other disciplines. Some observers have argued that ecological research might be given more support relative to physics, for example, but I think the support levels reflect fairly accurately the high quality proposal pressure. Applied ecological and environmental research has over the years fared quite well, in my view, in the modest programs of applied research in the NSF.

If we concede that all ecological and environmental research cannot be concentrated into one or even into a few agencies, is there no merit in any consolidation or coordination? On the contrary, I agree with the Carter reorganization team's suggestion that the natural resource development, inventory, and stewardship area could profitably be consolidated into a Department of Natural Resources. Such an agency might include most of the present Department of Interior plus the U.S. Forest Service, NOAA from Commerce, and perhaps parts of the Corps of Engineers from DOD. In the process there should be some integration of the inventorying, monitoring, and research functions. Personally, I think there should be an ecological survey that would parallel the USGS and provide a coordinated approach to biological inventories for use in environmental impact statements and natural resource management planning. Properly constrained so it did not develop too rapidly, it could, I am persuaded, grow into a very important aspect of natural resource research and inventory.

History has demonstrated that the development and regulatory missions cannot be easily accommodated in the same agency. For this reason I believe that EPA cannot and should not be part of any Department of Natural Resources. As a related matter, I would be strongly opposed to any merging of EPA into a human health agency. In my judgment, ecological and environmental issues are far broader than narrowly conceived human health issues. If these agencies were consolidated I would be concerned that such environmental impacts as atmospheric fallout, acid rains, smog, and other environmental damage to agriculture, lakes, forests, and natural species populations would be inadequately pursued and regulated.

In this discussion, time does not permit fuller development of the glaring ecological and environmental research program inadequacies of the HUD and DOT. Both of these agencies have major mission responsibilities with scarce ecological or environmental research to underpin their decision making. On the other hand, there have been some major improvements in the ecological research programs in the Corps of Engineers. Overall, ecologists should be encouraged by the improvements in the federal institutions over the past decade; there are areas needing attention, however.

INSTITUTIONAL CHALLENGES TO ECOLOGY AT THE INTERNATIONAL LEVEL

It is clear to almost everyone, I believe, that the biosphere is a single system with many links, both physical and biological, that cross national boundaries and hemispheres. The recent conference on global weather called attention to polar region winter smog that appears to derive from temperate region industrial areas. The build-up of global CO_2 from fossil-fuel consumption is well

documented and of potentially large consequence for global weather and the safety and economics of coastline cities of the world. Acid rain in Canada and the Scandinavian penninsula originates in atmospheric pollutants released far from the sites of deposition. Atmospheric testing of atomic explosives in the United States, Russia, France, and China produced global radioactive fallout. Pesticides like DDT and toxic metals like lead have become global contaminants. Ocean pollution by petroleum, exotic chemicals, and decay-resistant plastic debris is now world-wide. Overexploitation by a few developed nations of marine mammal, fish, and invertebrate populations create local displacements of marine ecosystems, economic hardships, and social unrest. High-flying aircraft, heavy space-vehicle traffic, agricultural fertilizers, and exotic chemicals all pose potential threats to the earth's ozone layer, with possible consequent difficulties in global weather change as well as increased incidence of damage to living organisms from enhanced ultraviolet radiation. International transport of diseases and pests pose potential threats to man, and his domesticated plants and animals as well as to natural species populations. Global human population growth will stress not only man's food and natural resource supplies but many of the earth's natural ecosystems and entire species populations.

Clearly all these matters illustrate why there needs to be global ecological institutions to assist in prioritizing our efforts to understand these urgent questions. The beginnings of such institutional structures are emerging, but it is not clear that they can cope effectively with these problems at an early date.

The International Council of Scientific Unions (ICSU) involves the academies of science in many of the world's countries. ICSU has its Special Committee on Protection of Environment (SCOPE). From this modest, partially governmental, partially nongovernmental, organization, a number of important symposia and reports have addressed particular questions. Sustained international research programs, however, have not been the normal operating mode for ICSU, although the emerging mussel watch may be an important beginning.

The United Nations has addressed a number of important ecological questions through conferences and symposia and through some of its operating divisions such as the World Health Organization and FAO.

Bi-national or regional groupings of nations have established commissions, e.g., the International Commission on Marine Mammals, to look at particular problems which have had significant ecological content.

The professional scientific societies have sponsored international symposia, conferences, and workshops to address specific problems or broad scientific areas, often with large ecological content.

In sum, it is my assessment that in 1979 the international institutional structures are far less effective than the national structures of the advanced countries for addressing significant ecological problems. It would be a surprise to find it otherwise. The important question is whether or not more adequate international structures are essential, and if so, what are the priority ecological objectives that need to be pursued and what types of international structures appear to hold the most promise? For example, in addressing the international ecological and human health repercussions from releases of major toxic substances, what mechanisms would be helpful? What research would assist in helping us understand how the substantial competences of private industry can best be utilized and how the initial costs of assessment and clean-up can be borne? What do we need to know to propose how damages be assessed to causing organizations?

Again, this international institutional challenge is an exceedingly rich topic that deserves much fuller treatment, but I must push on.

PROFESSIONAL SOCIETIES AND SIMILAR INSTITUTIONS AS CHALLENGES TO ECOLOGY

Ecologists in the United States tend to have professional memberships in a number of scientific and technical organizations. The oldest extant U.S. ecological organization is the Ecological Society of America. This "institution" has undergone a series of fissions in its two-generation lifetime. The Ecologists Union that eventually became one of the strong conservation organizations started as a splinter group of ecologists who wanted to address important public environmental and conservation problems of the 1940s. The American Society of Limnology and Oceanography was formed largely by aquatic ecologists seeking more control over meetings and publications. The Institute of Ecology is

an outgrowth of the Ecological Society's concern for improving public understanding of ecology and enhancing the scientific basis for environmental legislation and administration. This tendency of professional groups to split into factions and to proliferate new institutions seems irresistible. The penalties for such lack of restraint, however, are large. Communication between splinter groups falls off and the cost to individuals and institutions of multiple membership eventually forces choices which further reduce communication. A concomitant with this communication reduction is a dispersal of the potential political and social impact of the discipline.

Thus, looking ahead, ecologists must give more thought to how they can slow this proliferation of new disciplinary subgroups into independent organizations. In addition, more professional attention needs to be given to improving the effectiveness of professional organizations. Much professional communication continues to proceed via means that antedate the communications revolution we are now caught up in. Just how best to utilize the myriad of new communication technologies to facilitate intra- and trans-disciplinary scientific discourse needs special attention. I'm very mindful of my own suspicions of means other than face-to-face meetings, exchanged letters, and published literature for scientific communication. I worry about how quality control of science can continue to function if the products are not printed and widely read over a period of years. Perhaps this is a shortcoming of us grey-beards, and the television and computer generation lacks these hang-ups. In any case, professional organizations must devote more imagination and energy to their central reasons for being.

The population of trained ecologists who hold positions in industry, private foundations, free-standing research institutes, or federal and state laboratories is growing. The former clear leadership domination of ecology's scientific and professional organizations by university-affiliated individuals will be unlikely in the years ahead. One of the institutional challenges to ecologists is to recognize this and anticipate the kind of differences this will make to these organizations and their roles in society.

The ecological and environmental revolution of the late 1960s and early 1970s emerged at a time when more drastic change was possible in the U.S. society than is characteristically the case. Major federal and state environmental legislation emerged in that period: the Clean Air Act, the Clean Water Act, the Environmental Protection Act, the Toxic Substances Act, the Endangered Species Act, the Wilderness Act, etc. Ecologists in those years became almost as familiar in the halls of Congress as protesting farmers are in 1979. Congressional staffs and individual Congressmen became quite knowledgeable about ecological issues.

The national mood into which we have now moved is exceedingly different. While polls indicate that people say they still support Congressional actions which improve the environment, the cost of such proposals in lost jobs, lost exports, increases in energy consumption, new taxes, and more federal regulations all command far more political attention than in 1970. One of the very important institutional challenges facing ecology and ecologists is to find mechanisms for improving the quality of advice offered in important decisions by Congress and the federal and state agencies.

The National Academy of Sciences, in spite of the fact that up to the late 1960s they had but a single ecologist among their members (G. E. Hutchinson of Yale), did play and continues to play an important role in advising on environmentally and ecologically important legislation. This was possible because much of the advisory services provided by the Academy come through its National Research Council, in which most contributors are not Academy members. Some ecologists have been critical of this state of affairs, but I think it is rectifying itself as more outstanding ecologists are invited to become Academy members, and most ecologists seem to be comfortable in providing advice that is credentialed by the Academy's report review processes. I list this matter as a modest institutional challenge to ecology and presume that a better job will be done to recognize the outstanding ecologists by current and future Academy members.

THE VALUE-TRANSMITTING INSTITUTIONS AND ECOLOGY'S CHALLENGES

One of the great features about the discipline of ecology is its almost unique power to pull the great fact edifice of science into creative associations with the rich insights into human values and ethics from the arts and humanities. The scientific demonstrations that species can be interdependent, that ecosystems require many different kinds of species to function normally, that many species are far more vulnerable than humans are to man's technological impacts on the biosphere all carry value implications in addition to the facts themselves. The discovery that certain agricultural strategies such as broad spectrum persistent pesticides were inherently instable was an

interesting body of scientific data. That these strategies were developed in ignorance of their broad biological ramifications and were the causes of immense unintended environmental damage came as sobering scientific data and also as an important lesson in relative values.

The rapidly growing humanities literature that explores the value questions which flow from ecological understanding will, I think, keep future students of the literature-of-the-1970s busy for a long time. However, one of the institutional challenges ecology faces is the vastly contrasting human actions that can be taken based on differing value judgments flowing from ecologically flavored perceptions of the world and man's place in it.

One needs only to think of individuals like Ms. Squeeky From whose associate suggested that her unsuccessful presidential assassination attempt was perpetrated to call attention to the perceived need to halt man's environmental damage and man's threat to other animal and plant species. Or, we can remind ourselves of the well-educated new pioneers who have dropped out of our technological society to live quite primitively in order to be in harmony with nature.

While these may be extreme examples, they do illustrate one set of ecologically related, value-influenced human behavior. The zero-population growth efforts have ecological perspectives as do wilderness preservation organizations, wildlife conservation organizations, etc. Organizations today oppose highways, forest management practices, wildlife management practices, power line and power plant siting (both nuclear and fossil) as well as overseas development operations, among other kinds of human activities. Frequently such opposition is made in the name of ecology — and on occasion — with some pertinent facts from ecological research.

In a brief presentation it is not possible to develop fully the range of value positions adopted by individuals who frequently honestly feel they are responding responsibly to the facts as they see them. What we can do at this time is to note that this area poses an important set of institutional challenges to ecology and to ecologists.

It is clear, however, that the challenge is not one of bringing people over to one or another specific set of values. Rather it is to improve human understanding both of ecology and of the meaning of risk. In the latter, one needs to be cognizant that risk both to man and to other species populations needs to be addressed. Further, much work needs to be done in improving understanding of man's need to continue to make decisions in conditions of uncertainty. Failure to decide or long delays in making decisions are themselves a kind of decision with major ecological, economic, and value ramifications. The first challenge to ecology and to ecologists is to rigorously examine the quality of the data being advanced in the name of ecology, and where these are clearly questionable, statements from scientists need to appear in print to point out where such are in conflict with dependable data. Additionally, competent ecologists need to reach out toward the value questions, but with a clear understanding that this is more than science.

What are the institutions in which human values get explored and individuals evolve their sets of values? Clearly the answer is complex, but we might address it more easily if we ask how well ecology and ecologists are articulated with such institutions. The nuclear family is clearly one of man's most important value-transmitting social organizations. Other than our own immediate families, what cost-effective vehicles are there for improving real ecological understanding in large numbers of families? The mass media are one avenue. How well is high quality ecology made available via the mass media? What efforts are made by ecology and ecologists to enhance this? Personally, I think more can be done here. Another avenue we have found are the colleges of home economics or human ecology and the K-12 and cooperative extension linkages. These are effective access points for getting enhanced ecological understanding to families in contexts that link each household to the broader ecosystems. It permits and even encourages exploration of how individual and family values influence behavior which influences consumption and waste of resources, and how collective behavior can achieve objectives related to shared values. I commend your cultivation of these institutional linkages, because good data, sound questions, and useful paradigms are well appreciated and there is much underutilized talent in these settings.

Religious institutions clearly attempt to instill particular values in their parishioners. Some of these organizations have quite actively sought ecological and environmental expertise to assist their understanding of the facts of important matters. These are institutions I trust ecology and ecologists will not ignore when invited. More formal linkages are very difficult to achieve by public institutions and governmental agencies. However, I am not at all sure we have been imaginative in this regard.

On campuses our colleagues in the arts and humanities are frequently deeply interested in exploring the quality of the facts used by opposing sides in heavily value-laden ecological and

environmental issues. Again, I hope we will not assign too low a priority to responding to such requests or initiating the contacts ourselves, because these gifted men and women influence the lives of many by the quality, beauty, and appeal of their value explorations of significant issues.

Various wilderness, conservation, and other groups devote much energy and effort to garner support for particular value positions. Other organizations concentrate on trying to teach values in urban poor, extremely hostile, environments where the patience, and, to be quite candid, where the comprehension levels of many residents are not up to sophisticated ecological lectures. More imagination is needed in designing ways to improve ecological understanding of people in these environments. I'm not sure ecology or ecologists have given this institutional challenge enough thought.

No treatment which deals with the institutional challenge of coping equitably with ecological facts and human values can overlook the role of our judicial system. One of the marvels of the environmental movement has been the role of the courts in coping with groups who have very different value assessments of a single array of ecological and environmental facts. Time doesn't permit us to develop the gold mine of fascinating case law that has been accumulating over the past decade. Organizations such as the Environmental Defense Fund has become the equivalent of the American Civil Liberties Union in playing watchdog over important environmental legal issues. The challenge to ecology is to ensure that the facts on which important points of law are decided are as good as they can be. Decisions overturned because of resolvable ambiguity in the fact situation can provide later legal ammunition for weakening other important cases. Ecologists and ecological organizations should be concerned and challenged by this, and where competence permits, offers of help should be forthcoming.

SUMMARY

I have attempted to lay before you a range of the institutional challenges that face ecology and ecologists. Virtually all are getting some attention. For the most part, I have chosen those I feel need additional, or even urgent, high quality attention. The range in scale of these challenges is enormous. The institutional or organizational aspects per se are not the important element — rather it is the set of scientific questions and the human or value problems that lie beyond and, in some cases, that may be caused or exacerbated by the organizational matters; these warrant attention. Alleviation of or scientific progress toward resolution for most of these problems lies beyond personal expertise or competence of single individuals. However, the aggregate of the scientific competence, expertise, insight, and energy among the ecological community and its institutions can make substantial progress in all of these fields.

* * * * *

QUESTIONS AND ANSWERS

S. I. AUERBACH: John, that was an overpowering set of challenges. I would first of all like to see if there are any questions or comments from the audience. Let me start off with one. One of the things you expressed concern over, which I am interpreting as the relationship between little ecology and big ecology, and implicit in what you said, is that big ecology ultimately depends on the development, maintenance, and strength of little ecology in academic institutions. What you didn't allude to, and I'd appreciate your comments, is that ultimately little ecology depends on the marketplace for its wares. What we now have in the country is a combination of future or present markets for ecologists, ranging from the environmental firms who, in a sense, derive social support through NEPA and related regulations and the merchandisers of scientific information (e.g., Mitre, TRW, NUS, etc.). I think that there has to be a more fruitful connection between that marketplace and little ecology than I sometimes perceive, in the sense that it is there where little ecology has to get its ultimate support and therefore its sustenance.

J. E. CANTLON: Well, I certainly wouldn't dispute that. I think I skipped a section, because I was running out of time, in which I make the observation that "little ecology" really was most of ecology up until the emergence of the AEC National Laboratories. As one looks ahead in time it is very difficult to visualize the "little ecology" research community getting

very large, and what we see is the big ecology group growing. The thing that has happened in DOE and EPA, I believe, is destined to happen in all of the federal agencies. There clearly are environmental constraints on this planet and we have essentially to address those in order to continue a healthy human system.

The products of universities that have been trained with problems in little ecology are going to have to be additionally trained to operate effectively in these larger problem settings. That is an instructional and training challenge the universities are beginning to work at and some are doing much better than others. The national laboratories can, through summer research opportunities for graduate and undergraduate students, also play a significant role.

G. M. VAN DYNE: I would like to address what appears to be a conflict in what you said. You first commended the Oak Ridge National Laboratory for its role in the Eastern Deciduous Forest Biome Program of the International Biological Program. Later on, you condemned organizations which participate in research as well as contract it out on the same project. Now it seems to me that in the IBP, Oak Ridge was participating in research and also contracting out research. Why do you suggest they did a good job on one hand and then put forward the suggestion that they should not do both?

J. E. CANTLON: I think there is an inherent conflict of interest that emerges when you have research organizations also serving as contractors. This is especially true in the EPA laboratories where the individuals who are PIs are also screeners of proposals and supervisors of large numbers of grant projects. In fact, some EPA laboratory scientists have complained that they are supervising so many grants they can't do their own research effectively. I think that is a serious national problem. Additionally, when laboratories receive proposals and are responsible for selecting some for funding, there is an opportunity for the unfunded applicant to perceive the laboratory later performing work closely related to that proposed but unfunded. This is not to say there are no occasions in a particular large project where one might subcontract a small portion of it. What I was addressing is a standard pattern of action in which the practice is the normal mode of operation. I think that gets us into difficulty.

S. I. AUERBACH: I was going to address that when George did. I would say that part of the problem stems from more a question of individual ethics than the question of intrinsic conflict. We tend to feel, on a basic principle, that in a general area where there are some broad goals to be achieved, the aims of the university researcher as well as the agency may be better achieved by laboratory researchers forming a subcontractual partnership with his university colleague rather than the university colleague getting a grant somewhere out of Washington headquarters with which he can do what he wants but which may keep him out of contact with the mainstream of research. The kinds you allude to are some of the ethics problems that exist between investigators which unfortunately do exist. You can only hope they work their way out.

J. E. CANTLON: It is not only the ethics but the management problem as well. I think that where the individuals are drawn in as joint investigators in a project with a commonly agreed-upon set of objectives, it works better. I think that was why IBP worked better than has been true in some of the routine contract management situations in national laboratories.

E. P. ODUM: Could you comment, John, just a bit more on your statement "rigorous examination of contributions made in the name of ecology." Do you think that the way the SF contracts DOE and EPA is sufficient or are you talking about something on a larger scale. For instance, I'm thinking about the theory that diversity and ecosystems stability are causally related that came in just a short time ago and that everyone seems to accept immediately, only later to find out that it was not a sound generalization. Are we in error or are you talking about more rigorous examination of concepts before they become written into all of our standards, codes, etc.?

J. E. CANTLON: Clearly one of the ways science progresses is to make ideas accessible for everyone to shoot at them, and science has always progressed in part by investigators making errors and publishing prematurely or with invalid interpretations of data. What I am really getting at is that frequently in the case of urgent national problems in which such data become pertinent, there is a tendency for decisions to get made in arenas in which bad data are utilized as a basis for making or justifying a decision. I think that the ecological community has not always been as responsible as it could be in commenting forthrightly about the quality of the data utilized in some of these decisions. That is what I am stressing.

AUDIENCE: Yes, but frequently it is not clear who generated the data. How do we get this management. I agree that there are a lot of things that are pure garbage, and I think there was an article in SCIENCE not too long ago in which they were taking EISs to task for this sort of thing.

J. E. CANTLON: Well, I guess I would make this observation. If you go back and read the scientific literature of 50 years ago, scientists did not wear kid gloves in dealing with each other's ideas as much as they do today. There seems to be a tendency of 'don't knock my boat, and I won't knock your boat,' and I think that is dangerous. It is especially dangerous in the field of ecology. The whole area of environmental constraints on technology poses the risk of such an overwhelming cost to society that decisions should be based on good data or pure politics, not the latter in the guise of the former. The environment in which much of the major environmental legislation was derived came out of an environment in which this society was probably more susceptible to change than in any other comparable 10-year period in the nation's history. That is unlikely to be the case in the future. It was a very peculiar transition time. Ecological data that are clearly questionable need to be questioned through articles in the letters section or the short-term report section such as one finds in SCIENCE. Ecologists need to point out why those data and those conclusions need to be held open. We don't do this frequently enough, we really don't.

AUDIENCE: Another place to address the quality of research undergirding environmental decisions is when you supervise research contracts. Actually, if you had the right people in the right places, you could short-cut things by two or three years and simultaneously keep a lot of this faculty data from getting into the decision process. If you have somebody who is over-burdened, even if he has the capability and the talents to cut out some of these things in sponsored research and contracts, it may not happen. There's another place where we don't have enough people in the right place and time. But what you're saying is to be more responsible and less gentlemanly and to challenge someone directly.

AUDIENCE: You emphasize the necessity of having data that are widely acceptable before making an important decision on environmental issues. I would question whether we make most of our decisions, important decisions, on environmental issues on the basis of data. We make these decisions on the basis of experience with those issues and we try to draw in experienced people. I would argue, counter to what you said a moment ago, that the objective really is to develop the experienced people capable of interpreting previous data and laying out a course of action that can then be argued. It's experience that we are trying to build into the scientific community, experience that can be brought to bear on the major issues, and those major issues are indeed resolved on the basis of no data at all in many cases.

J. E. CANTLON: No data, bad data, inadequate data, good data; I think all of those are true. The challenge is to make clear which decisions rest on which of these. I would observe that the arena of the courts has become an exceedingly important area in evaluating decisions concerning the environment. Many of the decisions that we have lived with, and have eventually validated, and some federal acts have come about by testing them in the courts.

AUDIENCE: Are you suggesting the courts are experts in handling that circumstance?

J. E. CANTLON: I wouldn't call them experts on scientific matter at all. As a matter of fact, any good attorney will tell you that it isn't who is right or who is wrong, it is who wins the case that counts.

APPLICATIONS OF ECOLOGY TO ENVIRONMENTAL ASSESSMENT: THE ROLE OF ECOLOGISTS IN THE DECISION-MAKING PROCESS

Frank F. Hooper
School of Natural Resources
The University of Michigan
Ann Arbor, Michigan

S. I. AUERBACH: We got to know our next speaker because he led a pioneering experiment in putting ^{32}P in streams. We just duplicated it again last spring. Frank Hooper and his colleague at Michigan State University, Bob Ball, were two of the pioneers in stream radioecology. Frank has had an indirect association with us over the last 20 years. In the early 1960s, he participated at times with us in running our radiation ecology institutes because of his experience and interest. He served in the then Atomic Energy Commission Division of Biology and Medicine program. As you know, in 1971, we went into the environmental impact statement business in a large way. It was mandated then by the regulatory branch of the AEC which subsequently became the Nuclear Regulatory Commission. This whole activity in applying and enforcing the concepts of NEPA has resulted in, at least at this Laboratory, at the Argonne National Laboratory, and at the Battelle Northwest Laboratory, a considerable body of ecologists being involved in many of these issues which, in fact and experience, are continuously debated and which are of concern when trying to arrive at a prediction of impacts on the environment. Frank Hooper is one of those few senior ecologists who have gone to serve with the Nuclear Regulatory Commission as a kind of judge in these administrative licensing and hearing boards. I'd say there have been very few who have done this, and so he brings to this topic a rare insight of direct experience on this matter. There is one last thing I should say about Frank, a secret. In 1967, we were designing and planning what was then the second radioecology symposium which was to be held at Ann Arbor, Michigan. We would go up to Ann Arbor to meet, and Frank would be our host. There I learned the secret of a rare martini that Mr. Hooper imparted to me and which I will now impart to you. The secret of this drink, which is guaranteed to get a party going fast, is the following. You mix up a fairly dry martini some days in advance. You put it in a deep freezer, preferably one about 30 degrees below zero (Fahrenheit) and just leave it there until the party is about to start. Then you pour this thick viscous substance into a glass and you let the people start drinking it. It is marvelous. With that I will introduce Dr. Frank Hooper.

• • • • •

The National Environmental Policy Act together with the related circumstances bringing this act into being have had enormous effects upon the lives of almost every citizen, and especially those of us earning our livelihood in the environmental sciences. In one way or another we have been caught in its grasp and, depending upon your special interests, its effects have been either a blessing or a plague which has brought considerable trauma into our lives. No one can contest the benefits in terms of money which has been funneled into the environmental sciences, not only through direct support of impact investigations but also indirectly through calling attention to many areas which are worthy of research. Not to be overlooked is the support furnished directly and indirectly to large national laboratories such as we are dedicating today. It has created jobs for our graduate students and in some instances has led to stimulating and fruitful research.

On the other hand, one must remember the great occlusion and congestion that has taken place in our national meetings from the influx of papers concerned with impact investigations. We should also remember the hordes of manuscripts submitted to journals for publication that brought delays and frustrations.

Regardless of our opinions as to the overall benefits or non-benefits of this act, I want to share with you today my experience in decision-making which has evolved as an indirect result of the National Environmental Policy Act. Decision-making by scientists is one of many changes brought about by NEPA, but one which may have lasting effects upon ecology and upon society.

My experience as a decision-maker is limited to the Atomic Safety and Licensing Board Panel. I first wish to describe the organizational structure and how the decision-making process works within the Nuclear Regulatory Commission. There are many ways ecologists have played major roles in decision-making, as referees and as consultants, but today I wish to concentrate upon their role in the adjudication process.

The procedure whereby a federal agency can delegate responsibility for decisions comes from the Administrative Procedure Act of 1946. This allows the agency to delegate decision-making to an administrative law judge. Decisions are made within a set of rules and policy established by the agency. Thus there are matters the judge cannot decide since they are covered by rules and also a segment which is open to decision-making. Through the Atomic Energy Act of 1954 (as amended), the Nuclear Regulatory Commission has gone further than putting decisions in the hands of a single administrative law judge. It established one or more Atomic Safety and Licensing Boards, each comprised of three members; one must be qualified in the conduct of the administrative proceedings and two must have technical qualifications appropriate for the proceedings. In effect, this provision recognized that technical input into decisions was necessary because of the array of data and testimony considered. It further provided that the board members appointed by the Commission may be from either the private sector or the staff of the Commission or other federal agencies.

Decisions regarding the licensing of plants as well as other matters are, of course, subject to review. The immediate body of appeal from a decision made by a board is the Nuclear Regulatory Commission Appeal Board, and appeal then can be made to the Commission itself. These bodies can reverse or modify decisions made on any issue. Further, appeal of the Commission decisions can be made to a U.S. circuit court.

The organization chart (Fig. 1) shows the rather unique position of the Atomic Safety and Licensing Board as regards the Commission and the other units of the Nuclear Regulatory

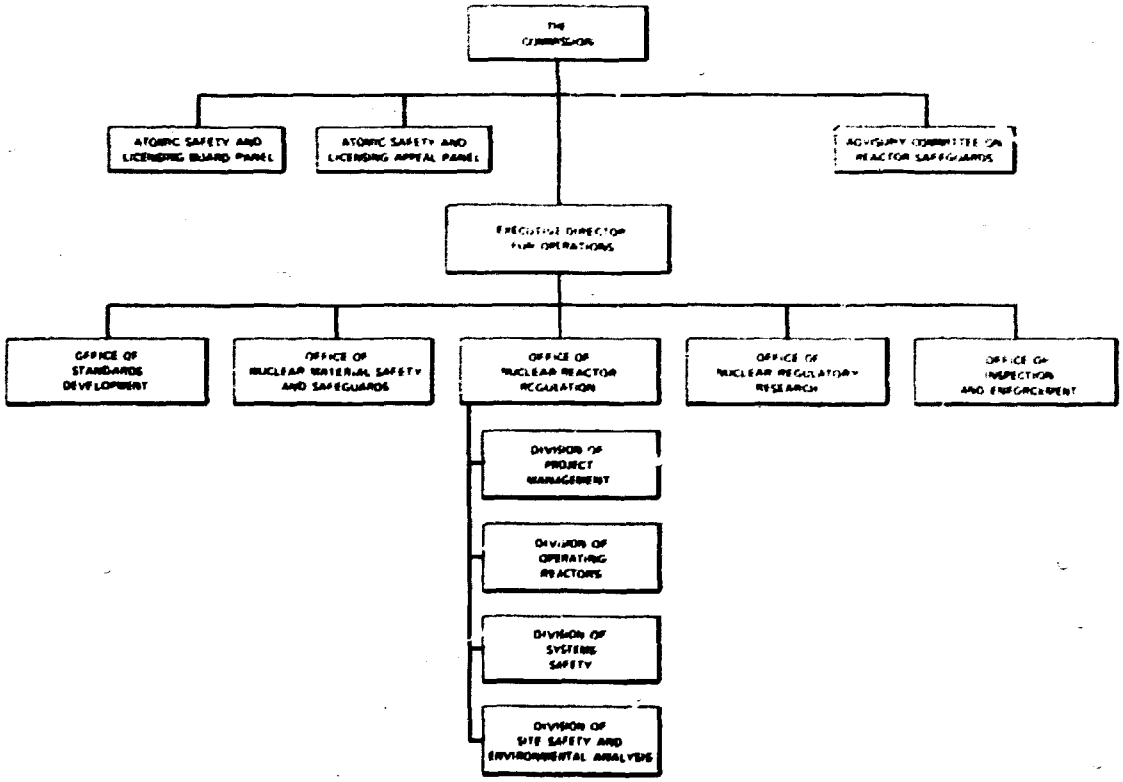

Figure 1. Relationship of Atomic Safety and Licensing Board panel to the Nuclear Regulatory Commission.

Commission. Responsible only to the Commission for its decision, it thus is independent from the fact-gathering units which are responsible for the detailed technical analysis of all of the engineering and environmental matters in the construction of a nuclear facility. This group called the NRC staff is composed of cadres of experts in engineering, economics, geology, as well as in environmental affairs. This unit also contracts with the national laboratories such as Oak Ridge for assistance in studying the facts of any proposed nuclear site. The Oak Ridge National Laboratory, Brookhaven, Argonne, and Battelle Northwest for many years carried the major burden of these investigations. This has been a source of support for these laboratories. Many ecologists as well as other scientists have devoted a major share of their time to these impact investigations.

As a Board member it would be inappropriate for me to comment upon the quality of the evaluations. Needless to say, they vary tremendously, depending upon the subject and the scope of the investigation which has been required or requested by the NRC staff. In the long run, the merits of the decision rest upon the sifting and winnowing of all facts relating to the individual proceeding. It is appropriate to say that the correctness of the final decision must in part rest upon the quality of the work performed by the scientists themselves. Stated differently, the board's decision can be no better than the quality of data input requested and brought forth by the staff from the national laboratories.

To understand how an ecologist fits into such a procedure, we must next look at the technical composition of the Licensing Boards and of the parent panel from which the Licensing Boards are appointed (Fig. 2). The 20 or more boards operating at any time are appointed from a panel consisting of three components: first, lawyers qualified in administrative law; second, physicists and engineers qualified in nuclear physics and engineering, capable of evaluating physical science and engineering aspects; and third, environmentalists selected from ecologists and from the public health field. Each segment of the panel has a portion of the members from the permanently appointed Washington staff and a fraction from private sector. Private sector members are from academic institutions and the national laboratories. In the case of the ecologist--public-health component, only two of eleven members are permanently assigned in Washington. The remainder are from academic institutions throughout the United States. Expertise among the environmentalists ranges from a strong orientation toward water quality through a span of specialties in such fields as aquatic ecology, terrestrial ecology, wildlife, etc. The basis of selection appears to have been more in the nature of securing overall breadth in the panel rather than selecting for specific subject matter recurring within hearings.

LAWYERS – 17		ENGINEERS AND PHYSICISTS – 19		ENVIRONMENTAL AND PUBLIC HEALTH SCIENCES – 17	
NRC–8	Consultant–9	NRC–5	Consultant–14	NRC–2	Consultant–15

Figure 2. Technical composition of Atomic Safety and Licensing Board panel.

Decisions by the three-man board are not always unanimous. Dissenting opinions on any part or all of a decision may be and are written by a board member. On at least one occasion, in the review process of the decision, the dissenting opinion has been upheld over the majority by an appelate body. Thus, within the area open to decision by the board, there is room for disagreement and differences of opinion.

As all of you know from reading the newspapers, board decisions are subject to public scrutiny. Public demonstrations and protests are a part of nearly every contested proceeding. Proceedings such as Seabrook and Diablo Canyon have been mired in long-running public controversy. Others such as Midland have undergone legal appeal to the Supreme Court. Thus, the groundwork covered by the board hearings is often the foundation for extensive social, political, and economic controversy.

As a parenthetical note, I might point out that Board members are not immune from personal repercussions. I was surprised to hear from my daughter who attends an eastern university that all of the board members have been rated by student groups concerned with environmental affairs. In other words, within our ranks there are the good guys and the bad guys. Frankly, I didn't have the courage to inquire as to my status in this ranking procedure.

Given the above structure and functioning of the licensing board, I now turn to my evaluation of how ecology and, more particularly, ecologists have fared in decision-making. At the outset, I must

say that these are personal remarks and do not in any way represent the opinion of any Atomic Safety and Licensing Board. It should also be noted that my remarks concerning ecologists and ecological witnesses do not apply to the quality group of scientists supplied to these hearings by the Oak Ridge National Laboratory. My remarks draw upon about 100 days of courtroom experience over six years and involving six licensing proceedings. I should also add that much of what I say comes not exclusively from personal opinion, but is strongly tempered by the attitudes toward ecology expressed by my legal and technical colleagues.

Ecologists have entered adjudicatory proceedings in two ways: first as expert witnesses, and second as board members who are the triers of facts and who ultimately make decisions.

The basis for using experts in administrative proceedings comes from rules laid down by Congress (Fig. 3). The basic function of a witness is to assist the trier of fact and enable him to understand the evidence and to determine a fact at issue. An expert witness whom the trier has found to be qualified because of skills and/or experience may testify both as to fact and to opinion. Opinion and inference are things perceived or known before the hearings by the expert. It should be noted that these need not be facts or data admissible as evidence, but can be other information if it is of a type reasonably relied upon by experts in the field in forming opinions. Testimony in the form of opinion or inference is not objectionable if it embraces ultimate issues to be decided by the trier of the fact.

RULE 702.

TESTIMONY BY EXPERTS

If scientific, technical or other specialized knowledge will assist in trier of fact to understand the evidence or to determine a fact in issue, a witness qualified as an expert by knowledge, skill, experience, training, or education, may testify thereto in the form of an opinion or otherwise.

RULE 703.

BASES OF OPINION TESTIMONY BY EXPERTS

The facts or data in the particular case upon which an expert bases an opinion or inference may be those perceived by or made known to him at or before the hearing. If of a type reasonably relied upon by experts in the particular field in forming opinions or inferences upon the subject, the facts or data need not be admissible in evidence.

RULE 705.

DISCLOSURE OF FACTS OR DATA UNDERLYING EXPERT OPINION

The expert may testify in terms of opinion or inference and give his therefor without prior disclosure of the underlying facts or data, unless the court requires otherwise. The expert may in any event be required to disclose the underlying facts or data on cross-examination.

RULE 704.

OPINION ON ULTIMATE ISSUE

Testimony in the form of an opinion or inference otherwise admissible is not objectionable because it embraces an ultimate issue to be decided by the trier of fact.

Figure 3. Federal rules of evidence relating to testimony by experts.

As you can see from these three rules, opinion can be and often is a vital ingredient in decision-making. Two points emerge where expert witnesses are exceedingly vulnerable and on which the Board, as the trier of fact, must make judgments: first, whether the witness is actually an expert in the subject matter of concern. and second, whether or not the bases for opinion are facts of a type relied upon by experts in the fi Clearly the latter definition puts great stress on what has been relied upon in the past and on wi ner it is the norm and is accepted in the field in question. Hence what is the "norm" in ecology is an issue at stake. Consideration of the above two points in the context of witnesses runs head on into the question of professionalism within the ranks of ecologists and the extent to which professional qualifications should be required. This leads to the more general question, whether or not this witness function is best pursued by ecologists or whether it should be allowed to go by default to some other professional discipline.

These are troublesome questions, and ones which we as ecologists have been reluctant to face. Be that as it may, I do not wish to argue professionalism at this point. It would, however, be useful to us here to evaluate the existing status of ecologists as witnesses, particularly from the two vulnerable points to which I have just referred. First of all, as to qualifications: boards on which I have served have been exceedingly generous as to granting qualification. They are very reluctant to single out qualification as regards to institution or to degree attainment. Hence, nearly everyone qualifies if he has some experience - the high school teacher, the junior college professor, the person employed in outdoor work of almost any sort by a consulting firm. All are qualified if a limited course background can be summoned for their qualifications sheet in environmental science. Since qualification is not an important screening tool, it is necessary to rely heavily upon the second point: whether or not a witness' opinion reasonably falls within the norm for the field, and whether it is of the type which in fact can be relied upon in decisions.

The weight to be given to opinion is always a difficult decision. Most difficult perhaps is the weight to be given to witnesses who tend to mix into opinion a large element of advocacy for an environmental point of view. Fellow board members, perhaps more than I, tend to be very sensitive to such a coloring of opinion. Examples are such "intuitive" ecological old chestnuts as "but everything is related to everything else," "but there must be some influence upon the higher levels of the food chain," or "the richness of species will most certainly be changed." Such quotes are often off-guard opinions made when the examiner has the witness trapped without an escape.

However, such flavoring of opinion by some of our long-cherished notions often appears very hollow unless (1) it supported by some sort of a modeling or assumption exercise which narrows the possibilities, and/or (2) the witness can recite experience based upon analagous situations which can lend weight. Modeling which narrows the possible explanations is a powerful tool and by far the most successful used where data are all but lacking. But it too can be challenged when modeling skills are on both sides of a given issue.

Thus, modeling at some stage may be a weak and almost subjective basis for support, and we must look for other ways to sharpen and bolster the bases for opinion. Other disciplines (e.g., geology, meteorology) rely heavily on "professional experience." When we examine what is meant here, we find that it means more than simply being a member of a society. Witnesses often can cite real experience with analogous situations which contribute to opinion. This admittedly becomes subjective, but carefully reasoned "experience" can elicit greater credibility and can be more persuasive than modeling exercises when there are loose and subjective guidelines for estimating the critical parameters.

Compared to other disciplines, ecologists seem to me either to lack professional opinions or to lack the aptitude for expressing opinion in a convincing manner. This may arise either from lack of professional "instincts" or from the nature of the subject matter. Be that as it may, I wish to suggest that ecological witnesses should be able to defend opinion based upon our concepts on more than an almost intuitive basis. Failure to perform with more credibility in part has arisen because we have not yet attempted to consolidate or assemble the vast array of environmental data so that analogs can be easily ascertained or can be extracted from the mass of field observations. Thus, we have not yet had time as a discipline to "extract" and synthesize.

Suggestions for improving the performance of ecological witnesses are three. First, we should be more vigilant in separating advocacy from interpretation of fact. This is perhaps something some of us have imparted to students which needs to be de-programmed. Second, opinion testimony could be improved via professional certification, although this is a route plagued with problems. Third, I would argue that in addition to equipping our young ecologists with depth in the area of modeling and assumption-making, we should look for alternative bases for opinion perhaps by extracting useful analogs from past studies.

The role of ecologists as technical consultants will expand as society continues to encounter difficult environmental problems. I also expect that our current use of ecologists as arbitrators and as evaluators of technical materials will expand. However, I would also argue that there is certainly room in the future for utilization of the ecologist's talents in similar decision-making roles such as I have described for the licensing board. The technical member in this role becomes a full partner in adjudicated decisions. This involves more than shedding advice and the presentation of evidence. There are elements of judgment which go into decisions, albeit within strict rules and only after the basis for judgment has been carefully reasoned with the attorney. It is argued that technicians should not be allowed to play both roles (as an interpreter of fact and as a decision-maker), because we have very little in our professional background to qualify us for the latter job. My colleagues at Ann Arbor who claim expertise in the environmental policy area abhor the idea of anyone making decisions who is not "properly" trained in social science. Also, ecologists as a group are frequently accused of having such a jaded background that we cannot make fair decisions for the public as a whole.

The answer to both of these criticisms, I think, can be met within the structure and roles laid down by the agency. The degrees of freedom in the decision-making open to technical members are chiefly technical. I would support the notion that the judgment of technical people is not only appropriate in serving the public interest but it is advantageous.

On the positive side of the participation of technical members in adjudication are a number of benefits. Of overriding importance is what I believe to be almost a self-evident fact that a much better technical hearing record will be accrued for the decisions. This is achieved in several ways. First, the three-man panels collectively can have on the average a far better understanding of the technical evidence than a single legal specialist. Second, the process of taking of evidence is greatly improved via the interrogation of technical members. The one-on-one exchange between technical panel members and technical witnesses permits technical skeletons to be uncovered. Without such a one-on-one exchange it would seem to me that many important facts will fall through the legal cracks. Technical members cannot always be completely effective with their counterpart witnesses. However, they usually can explore the basis of opinion much better than an attorney. Their skill in this venture improves with service. It is exceedingly difficult for the board chairman unless he is specially trained in technical matters to appreciate all the fine points of cross-examination. Technical members ease this burden and assist the examination so that it will critically embrace the question at hand.

In summary, then, I would strongly support the position that ecologists and other technical specialists can greatly improve the efficiency and effectiveness of the hearing process through participation as members of an adjudicatory panel. The role they play is to sharpen and tune the technical matters so that the technical stones are not left unturned. Thus, they serve as a safeguard to both the interests of the public at large as well as the specific interests of the participating parties.

* * * * *

QUESTIONS AND ANSWERS

S. I. AUERBACH: I know, Frank, you have been addressing a subject of high relevance and at the same time one of considerable delicacy, for obvious reasons; but we will see whether there are any questions or comments that you might be able to respond to.

S. W. CHRISTENSEN: In relation to the last conclusion, if the ecologist in fact performed as a dedicated scientist, do you think that it would be necessary for all three groups to have the services of an ecologist? Why wouldn't it be just necessary for one group to have the services of an ecologist? What is there that causes the ecologists to differ so much in their views, perhaps as a function of their employers interests?

F. F. HOOPER: Well, I guess the answer here is that if things were completely objective, you probably would be right. One set of ecologists could serve all three. But, as you know, in the adjudication process, this is not the case. We are bound to give everybody their own say and so everybody comes in with his own group of ecologists and this is the name of the game.

S. I. AUERBACH: I guess one thing I would want to mention, which relates back to something that John Cantlon spoke about this morning, is that there is still ample room for training at the academic level of ecologists in serving both as presenters of data and as collectors of data within the context and confines of this adjudicatory process, wouldn't you say?

F. F. HOOPER: Well, this is sort of a difficult one and we have thought about how to train people, and I really can't come up with a quick and easy answer. At Ann Arbor we actually had a course a while back in which we had sort of a mock hearing process, but this went over like a lead balloon. The student who is an advanced undergraduate and doing great, well, he could care less about this sort of thing. Student interest in it was not high. I guess the answer here goes back to whether or not we are really serious about this matter and if we are going to be professionals. I suppose we have to go this direction but I think that whether ecologists can go this route and become professionals in this sense is an open question. I'm not necessarily advocating it.

F. E. SMITH: What criteria are used for selecting the technical members on the board?

F. F. HOOPER: Well, I wish I knew that. I think, in my case, Stan or some of these guys told somebody else about me, I don't know. I was asked if I wanted to do it. I have no way of knowing.

F. E. SMITH: According to the process, was it any better than the one used to determine whether or not a witness was excellent?

F. F. HOOPER: In either case, there is a certain amount of subjectivity regarding these things and I don't really know what to say.

S. I. AUERBACH: I think your last question or comment, Fred, is a valid one. This Board has kind of a screening campaign or a hunting campaign in a somewhat typical Washington-type manner, looking for senior-level ecologists who could bring experience. They found, of course, that it is very hard to select someone.

F. F. HOOPER: It is hard, particularly getting outside people; it takes a good deal of time. It is a matter of how much time you have to spend on it.

RADIATION ECOLOGY AT OAK RIDGE

Eugene P. Odum
Institute of Ecology
University of Georgia
Athens, Georgia

S. I. AUERBACH: The next and last speaker of the afternoon needs no introduction. Gene Odum, I think, very rightfully can be called among a generation of American ecologists, Mr. Ecology. His books on ecology and his writings probably have done more to stimulate interest in the science of ecology among undergraduate students at a particularly formative part of their career than almost any other individual's work in the last generation. Again, in the early years of this program, when I was being converted from an insect ecologist to an agronomic plant physiologist trying to apply ecosystem techniques, I used to call on Gene to consult with us and help us do this kind of work on White Oak Lake bed. One of the problems that we subsequently began to address in philosophical terms was Gene's admonishment to me. He said "I don't want you to become a third-rate health physicist; remain a first-rate ecologist. Don't worry about measuring these isotopes well, they (health physicists) will do that." We soon learned that such an approach to our problems wasn't going to quite cut the mustard before the scientific peer community. Ecologists had to learn how to measure the isotopes as well as the health physicists did. Subsequent to that, Gene served also on our Division Advisory Committee and played an important role in carrying to Laboratory management the importance and significance of ecology in institutions such as this. So, with these brief comments which I said are really embellishments to a man who doesn't need any introduction, it is a pleasure to introduce Gene Odum.

* * * * *

We are gathered here today not only to celebrate the completion of a magnificent new facility but also to reminisce a bit about the history of environmental science and perhaps also to look into the future. Although we all know that it was the vision and persistence of Stan Auerbach that has resulted in this new building, many of us who have been associated with the program over the years like also to take some credit for the achievement. You have probably noticed how we all go around patting each other on the back as if we really had something to do with all of this.

Times for celebration are also times for good humor and perhaps a bit of good-natured kidding. I know that Stan would not mind; in fact, he probably enjoys some good-natured jokes at his expense. Also, this is a time, perhaps, to play devil's advocate in order that we do not become too complacent about our achievements. For one thing, this place looks so neat that one wonders if any real work is ever done here. Books and papers are neatly stacked away and you can even see the tops of desks. All the "gray" literature that seems to multiply exponentially with increasing size of institution is all neatly hidden in the basement. Laboratory benches are sparkling clean and everybody runs around in freshly laundered lab coats. All of this neatness is certainly appropriate for a bacteriological laboratory, but an environmental laboratory should have some mud, soil, some dead leaves, and dirty water around to make everybody feel really at home.

Also, the building is so comfortable and so complete as a working place that one wonders if anyone will ever go outdoors again. Working in a nice air-conditioned and temperature-controlled building, it is mighty easy to forget that the mission here is the environment, not the laboratory. Since so much of science is now conducted in laboratories, we must have, for balance, good science that deals with the out-of-doors. In our enthusiasm for technology and fancy facilities, we must not forget that human-kind remains dependent on the natural environment for the basic goods and services that we too often take for granted until there is a shortage or a malfunction. I think we should all monitor very carefully the nature of the papers which come out of a facility like this, and make certain that the directors and administrators understand that studies conducted in the laboratory alone do not provide the kinds of answers we need to deal with the much larger scale problems that have to do with the linkage of man-made systems, particularly man-made energy systems, and the solar-powered systems of nature.

Even today, with very little direct use of solar energy in urban-industrial areas, about one-third of the energy that civilization depends on comes from the natural or modified, semi-natural

solar-powered ecosystems. Food production, purification and recycling of air and water, and other life-support functions associated with primary production and material cycling are all processes driven by sun energy. While we can certainly find substitutes for the fossil fuels as they dwindle, there is at the present time at least no technological substitute for life-support functions provided by the natural environment. One need only to recall Apollo 13, the only one of the moon shots that failed to complete its mission because of a malfunction in the life-support module of the space craft. And when your life-support system fails, there is only one mission, and that is survival. Fortunately, Apollo 13 was able to return to the safe life-support system of earth without loss of life. Should our earth space craft life-support system fail, we have no refuge, no back-up system.

My point is, that if we really practice what we preach about ecology, that it is a science which deals with the interfacing of man and nature, then we must be sure that our research facilities are also interfaced. We all know, of course, that associated with this building are a number of excellent field areas and field facilities. We just simply need to remind administrators and funding agencies not to neglect the streams and rivers, the waste disposal areas, the watersheds, the forests, and the other outdoor laboratories where the real work of environmental science must take place.

When it comes to atomic energy itself, we are all very disappointed that so little progress in the peaceful uses of atomic energy has occurred in the thirty-five years or so since the establishment of Oak Ridge and the other Department of Energy's national research laboratories. Atomic energy today is still largely military; unfortunately, it has proved to make much better weapons than plow shares. One of the best assessments that I have seen on the subject of "What Went Wrong?" is an article in a recent issue (1979) of the Bulletin of the Atomic Scientist, by Carroll L. Wilson, who was the first general manager of the old Atomic Energy Commission. Wilson said, and I quote, "No one appeared to understand if the whole system did not all hang together coherently, none of it might be acceptable." And, of course, it is the environmental aspects of the nuclear cycle which have not hung together coherently, and are at present the big stumbling block to more widespread use of atomic energy. In addition to pointing out the technological difficulties of controlling fission and cooling reactors, Wilson also commented that in the early days chemists and chemical engineers were not interested in dealing with waste. It was not glamorous, it was messy and nobody got "brownie points" for caring about nuclear wastes. Consequently, Wilson charges that the AEC neglected the problem. I think we can say in all fairness that Oak Ridge was one place where the waste management problem was not neglected, thanks to Dr. Alvin Weinberg, former director of the Oak Ridge National Laboratory and Ed Struxness of Health Physics, both of whom are here today to join in the dedication ceremonies. We also owe a great debt to Dr. K. Z. Morgan, who unfortunately is not here today. Dr. Morgan was not only the pioneer in establishing the new profession of Health Physics, but he was, and continues to be, a strong proponent of the idea that any radiation is undesirable and that levels should be kept as low as possible, not only in man's working space but in the environment as well.

In the early days when the ecology program was operating on a shoestring and struggling to survive amidst the more glamorous programs of atomic physics, reactor technology, molecular biology, genetics, and so on, Stan Auerbach made a very smart move in requesting that outside ecologists be appointed to the advisory committees that annually review the work of ORNL. As we all know, outside "experts" often have more clout with management than insiders, even when both recommend the same thing. It was my privilege to serve on such an advisory committee for several years. I recall some very interesting meetings in Dr. Weinberg's office where, after looking over the details of the waste management and ecology programs, we would just sit around in a relaxed manner and talk. Dr. Weinberg would say, "Why are you ecologists so cautious about atomic energy? Can't you see . . ." and he would sell us the line very beautifully. At that time all we could say is that we just had some kind of gut feeling that the "disorder potential" was such that prospects could not be as rosy as pictured. Now, of course, we all have a much better understanding of the whole energy picture and realize that social, economic, and environmental constraints have to be considered, not just technological feasibility. Dr. Weinberg himself has written several articles in this vein recently (see Weinberg 1972). The need is to take the holistic view, as already noted in the commentary on Wilson's article. And this, all things considered, is the great contribution of the ecological paradigm. At least, from the looks of this new facility, it is no longer necessary to "sell" anyone at Oak Ridge, or elsewhere, on the need for a comprehensive ecology program.

One of the more fortunate dividends accruing from the early emphasis on the military aspects of atomic energy was the acquisition of a lot of buffer land to provide security for the national laboratories. It is this land that has provided unique environmental laboratories, and made possible a lot of experimentation and field instrumentation that would be more difficult to carry out in areas more open to the public. Having all of this land also required that the AEC develop not only environmental study programs, but also land management programs. These were started very early at the Savannah River Plant in 1952, where incidently a new building is to be dedicated this spring. At

Oak Ridge, ecological studies were begun in about 1954, and even earlier there was important work going on at the Hanford Reservation in eastern Washington where the early discoveries of biological magnification had much to do with alerting people to the dangers of environmental contamination. Although there were no ecologists in the Washington office of AEC during this early period, there were physiologists, biochemists, and biophysicists who had the vision to realize that environmental research was badly needed. They were able to get some very modest funding to start programs at the national laboratories and elsewhere. And, even more important, these early visionaries were able to convince the AEC to establish an environmental division and to hire ecologists to help shape and direct the program. This is when Dr. John Wolfe came to AEC and, during his tenure, there was rapid growth in environmental research programs at all of the laboratories and in the universities as well.

With strong colleagues in Washington we were later able to sell to AEC the idea of designating the buffer lands as National Environmental Research Parks (NERPs). When security was relaxed, there was pressure to return buffer lands to private ownership on the basis that such property was no longer needed. Fortunately, we could show that such lands were not "idle" but were being used for research in the national interest. We are proud of the fact that the Savannah River Project reservation, where the University of Georgia operates an ecological facility for DOE, was the first to be designated a National Environmental Research Park. I understand that the Oak Ridge reservation will soon receive such an official status. In my opinion, NERPs have a special value as prototypes for the industrial and power parks of the future (Odum and Kroodsma 1975). All high energy facilities, such as power plants, chemical industries, and so on, that have a potential for dangerous pollution and/or accidents, should be buffered by large areas of natural or semi-natural ecosystems. These not only protect the public in case of spills, but more important perhaps, the natural ecosystems can be interfaced with man-made waste treatment facilities to provide the ultimate tertiary treatment for the degradable components of wastes.

When Stan Auerbach was brought here in about 1954 to start an ecology program, it was fortunate that the program was placed under the Health Physics Division rather than the Biology Division. At that time the biologists were so preoccupied with the radiation effects at the organism and cellular level that they had very little interest in ecology. In contrast, Health Physics people were interested in and concerned about the environment. Stan would have been completely lost in the Biology Building among the huge colonies of mice and pure cultures of microorganisms which provided the main research tools in radiation biology in those days. The philosophy then was that since man and mammals were the most sensitive to radiation, it was only necessary to protect this group; all the rest of nature would presumably be taken care of. Like so many super reductionist ideas, this proved, as one could certainly predict, to be a gross oversimplification, and very soon the need to consider populations, communities, and ecosystems began to be more widely understood. Efforts to deal with atomic energy had much to do with the transformation of ecology from a minor or secondary status in biology to a new integrative science which combines the physical, biological, and social sciences. Thus, strange as it may seem, the problems and failures in trying to get into the atomic age have proved to be a tremendous boost to the development of ecology as a new integrative discipline (see Odum 1977).

But Stan did have his problems when he came here as a virtually unknown scientist working in a subject which had very little scientific status at that time. As we mentioned, radiation effects was the main emphasis and so everybody was rushing around radiating everything and anything that they could find to see what would happen. It just so happened that Stan's doctoral thesis had involved the study of mites and other small organisms which lived together in stump holes, that is, cavities in trees which collect water during rain and support a small but very interesting microcosm. Thus, it was only natural that he proposed when he got here to radiate stump holes. He became known throughout the Oak Ridge National Laboratory as "that stump hole ecologist." Fortunately Stan accepted the label in good humor and pushed the program rapidly along a hierarchy of ecosystem levels from stump hole microcosms to White Oak Lake, to sink hole forests, to watersheds, and to helping manage the U. S. Program of the International Biological Program, one of the largest and most comprehensive ecological projects so far attempted.

Now let us look specifically at radiation ecology, a subject which had its heyday here at Oak Ridge and still is an important part of this laboratory's work. During the 1960s and 1970s there were three international congresses in radioecology and also many symposia and special programs at the annual meetings of the Ecological Society, the Health Physics Society, and many other groups. Oak Ridge people played major roles in all of these symposia, and subsequent publications revealed a very large percentage of papers coming out of this laboratory. Radiation ecology, of course, if you want to define it, is concerned with radioactive substances, radiation, and the environment. At least that is the way I define it in my text book. As you know, in 1959 I tried to write up this field in some kind

of comprehensive manner as a chapter in the 2nd edition of my Fundamentals of Ecology. In the ensuing 20 years, there has been a lot of new work, but as far as I can see the basic principles of ecology, as applied to this special field, remain the same (see Odum 1959, 1971). As already indicated, the impact of radiation ecology on ecology, in general, was extremely important. To work in this field ecologists had to beef up their knowledge of the physical environment and to work closely with mathematicians, physicists, and chemists. In this way ecology was tremendously enriched; new technology developed by physical scientists came into general use in ecology. This included such things as tracer methodology, mass chemistry, colorimetry, chromatography, remote sensing, automatic monitoring, mathematical modeling, and computer technology. Thus, fancy instruments with flashing lights and clicking sounds became just as much a part of the ecologist's tools as that of other scientists. As biologists and medical scientists pursued the general area of radiation effects, the ecologists became interested in the other major aspects, that is, the fate of radioactive substances when released into the environment and the impact that they may have on the functioning of complex and delicate systems. The results of radiation effects studies are, of course, essentially negative because there is very little good to be found in radiating biological systems - food preservation being a possible exception. In contrast, the "fate" aspects have a positive aspect in the sense that radioactive tracers provide new tools for learning more about the functioning of complex systems. Just as the microscope in all of its phases, including the electron microscopes, extends our ability to study structure, so tracers in all their aspects extend greatly our ability to study [illegible]ion. Thus, with tracers one is able to follow the pathways of phosphorus, calcium, or other ele[illegible]s as they move through ecological systems or circulate within them. The very important field of mineral cycling, or biogeochemistry, which now (along with energetics) dominates present-day ecology, owes much to the early development of radiation ecology. Because of the availability of secure outdoor laboratories, it was possible to experiment with tracers on a large scale, as in the case of the so-called "cesium forest" here at Oak Ridge. Some 30 large tulip trees in an occluded sink hole were labeled with radioactive cesium and the movement of this tag was followed over many years. From this work our ideas about food chains, another important area of ecology, were greatly advanced. Also this experiment focused attention on the tremendous importance of the microorganisms and small animals that operate in the soil-plant-root interface.

Since the time of Darwin, biologists have extolled the value of earthworms as soil conditioners, but it was not until the age of tracers that we really found out what earthworms do. The studies in the cesium forest have showed that within a square meter earthworms ingest 200 grams of organic matter per year of which 20% is assimilated and the rest returned to enrich the soil. Of the portion that is assimilated, about 1% goes to earthworm biomass and the rest into the respiratory cost of maintenance. In seven years earthworms will turn over about 20% of the soil, if I remember the figures correctly (see Edwards et al. 1970). Thus, the truth about earthworms lies somewhere between those who claim that they turn over the soil every year and those who would say earthworms have value only as fishing bait. This is just one example among dozens where tracers have made it possible to measure quantitatively what had only been known qualitatively before. Microbial ecology, another rapidly advancing subset of ecology, thus got a shot in the arm from work here.

Tracers have proved to be equally good tools for working with aquatic as with terrestrial ecosystems. Just to pick out one example from the Oak Ridge experience, I would like to cite the work of the late Dan Nelson, after whom this auditorium is named. After many years of using ^{32}P and other tracers, Dan and his colleagues developed the interesting theory of "material spiraling" in streams - a sort of upstream nutrient conservation mechanism that allows scarce nutrients to remain in the stream longer and to be recycled by the biomass more often (see Elwood and Nelson 1972). Material spiraling is a good example of a unique or "emergent property" that results from functional integration of physical and biological components. It is another proof of the paradigm that the whole is more than just a sum of parts.

This is not to say that ecologists neglected the study of radiation effects. Comparative radiosensitivity received a lot of attention when it was discovered that organisms varied widely in their vulnerability to ionizing radiation. Radiation botanists found a relationship with chromosomal volume in plants to the extent that sensitivity of a given species could be predicted from measurements of the volume of the cell nucleus. As would be expected, ecologists added the dimensions of life history and vegetative structure that can greatly alter effects in the intact community. Thus, a sensitive plant with a large root system that is shielded from radiation survives better than a more resistent plant that has most of its growing cells aboveground. Again, laboratory or greenhouse experiments don't give the whole picture! The situation in animals is even more complicated. Studies here at Oak Ridge have shown that very low levels of radiation in streams flowing out of the waste disposal area cause chromosome aberrations in the midge larvae or "blood worms" (Chironomids) that form the basis of the food chain for many game fishes (see Blaylock 1965). The subtle and often unpredictable effects of ionizing radiation make it more difficult to deal with than if it acted like a poison such as cyanide that just kills quickly.

In addition to mineral cycling, microbial ecology, and food chain energetics, a fourth area, systems ecology, now looms very important in ecology. To deal with complex systems with weak bonding, it is obviously necessary that one establish simplified models to test theories and to try to develop some kind of reasonable mimic to the real world. It so happens that so far as the United States is concerned, the first systems ecology began here at Oak Ridge. It was mainly based on the efforts of three people, Jerry Olson who is still here on the staff, George Van Dyne who is now at Colorado State, and Bernard Patten who is with us at the University of Georgia. These three people developed and taught the first course in systems ecology, developed the first syllabus and other teaching aids, and, of course, published and continue to publish very widely in this general and important area. The history of this field is to be covered in a paper by Dr. Van Dyne later in this dedication program.

In summary, radiation ecology "bloomed" as a sort of hybrid field for about twenty-five years during which time it added "hybrid vigor" to the transforming field of ecology. Today, radiation ecology has been absorbed back into the "new" ecology as an integrated part, so there is less need for special symposia or other special emphasis. As we have seen, the tools and concepts of radiation ecology are now integral parts of four of the most important subdivisions of modern environmental science as a whole.

The road from reductionism and "one-problem-at-a-time" solutions to holism and "multi-level, integrated" solutions is long and hard. But it is a road that not only science must take, but one that economics and political and social science must take as well if man and his earth satellite are to avoid the fate of Apollo 13.

While fences at the national laboratories promote experimental work and hence should be preserved, there must be no boundaries to the exchange of ideas. The rigid boundaries between disciplines must be broken down. I believe ecology is a good example of how this occurs when there is an overall challenge such as atomic energy. Now that challenge is energy in general. The national laboratories can no longer be secure ivory towers of an atomic age yet to be born; they must become institutions of education that show a frightened and skeptical humankind how the pieces fit together. For the rest of this century, at least, the real-world problems are not to be solved by science and technology alone, because social, economic, and environmental components of the man-nature interface now loom as the main ingredients for survival.

* * * * *

QUESTIONS AND ANSWERS

S. I. AUERBACH: You would accept the Tennessee Valley as a logical goal for us to take over, wouldn't you? Any comments or questions of Dr. Odum. You have just had a rare experience with pure Odumese.

It has been a long and very, very, pleasant day. Again, thank you for coming and for a very enjoyable day.

BANQUET ADDRESS

Dr. George M. Woodwell

BRAVO Plus 25 Years

George M. Woodwell
Marine Biological Laboratory
Woods Hole, Massachusetts

A 1954 bomb test was a trigger in the development of the science of the environment.

On March 1, 1954, almost 25 years ago to a day, the Atomic Energy Commission exploded a thermonuclear bomb at Bikini Atoll. The test was BRAVO, the first of a series under the code word CASTLE. BRAVO went awry, and, as accidents often do, taught us much.

The year 1954 was also the year in which the AEC started its program of basic research at the Oak Ridge National Laboratory. The two events seem so remote as to be unrelated. I intend to trace some of the history that shows that they were in fact quite closely related.

Neal O. Hines in his 1972 book, Proving Ground, reconstructed the BRAVO detonation as it must have appeared from the Japanese fishing vessel "Fukuryu Maru," The Lucky Dragon, which was too close for safety:

> ". . . one member of the . . . crew, . . . standing alone on the deck in the early morning light, saw the western horizon filled by a yellow glow and ran to the cabin to awaken his shipmates, who emerged . . . to watch in amazement the changing light which resembled a sunrise. 'Seven minutes later,' as Captain Tsutsui recalled it, 'we heard a deafening explosion and then saw in the next instant a huge mushroom form shooting up in the distant sky. About 90 minutes after the blast, snow white ashes began falling all around the ship.'"

The clouds rose to at least 100,000 ft. Winds carried the debris, not north as predicted, but eastward toward Ailinginae, Rongelap, and Rongerik Atolls, 75 to 150 miles away. Rongelap, 110 miles downwind, was the most seriously affected. Sixty-four inhabitants received about 175 R in 51 hr before they were removed from the island. In addition the 23 members of the Lucky Dragon's crew received an unmeasured but significant exposure. One crewman died on September 23rd, apparently of a liver problem complicated by pneumonia, but there was no possibility of separating his death from BRAVO in the eyes of the public.

The details of these events of the spring and summer of 1954 as recounted by Hines make fascinating reading. The events were frightening, rapidly moving, awesome in size, and the times were revealing of both science and politics. The CASTLE series produced a fallout over 10,000 square miles of the Pacific Ocean in which radiation exposures were many times the lethal exposure for man. Two Japanese oceanographic surveys and one American survey confirmed that the Pacific Ocean had received extensive contamination with radioactive debris. Fish in Japanese markets were radioactive and were declared inedible. This move in itself was disastrous for many Japanese fishermen in the weeks that followed. Although the Japanese were quite understandably distressed, there was little appreciation of the mechanisms of contamination of the fishery, of the power of biotic mechanisms for concentrating or discriminating against radioactive elements, or of the other ways in which local concentrations of radioactivity might occur. Nor was there wide recognition of the extent of worldwide transport of fallout and the hazards associated with the re-entry of that debris into the biosphere. The engineers were clearly in charge and military considerations were dominant. But the situation was to change.

In 1954 the contamination of atmosphere and ocean was incidental to important military objectives. The widespread contamination of fisheries, however, and the outburst of objections in Japan were unexpected, unfortunate, and uncontrollable. The outburst did what biologists and even some of the engineers had not been able to do. The Atomic Energy Commission was forced, willy-nilly, into a much more comprehensive pursuit of the science of environment, into expanded studies of fallout distribution, meteorology, and into examination of such obvious problems elsewhere as White Oak Lake at Oak Ridge and the transport and accumulation of radionuclides by biotic mechanisms.

The CASTLE series did not end the U.S. bomb tests, but it did mark the advent of a completely new level of intensity of interest in environmental issues associated with nuclear energy. By the late 1950s when there was considerable interest in using nuclear explosives to excavate harbors around the world, interest focused on the Cape Thompson area of northwestern Alaska where the proposal was to carry out a demonstration project. At what was almost the final moment before the series of charges was to be triggered, permission was gained by Dr. John N. Wolfe of the AEC to carry out a series of basic biological studies in the area prior to the detonations. The studies extended over two years and showed that the area was used by a small group of Eskimos who would certainly be inconvenienced by the blast and by the hole, and would in addition be exposed to unusual amounts of radioactivity. The Atomic Energy Commission proposed, nonetheless, to proceed with the demonstration, except that two scientists on the project, Dr. Leslie Viereck and Dr. William Pruitt, objected, saying that the hazards were too great. They pointed to their own data and to experience with radioactivity elsewhere in the Arctic and emphasized the hazards to the local Eskimos. Although Viereck and Pruitt incurred the wrath of AEC officials and others and lost their positions at the University of Alaska, the points they had made were telling. The biotic hazards were widely accepted as too great and the harbor was never made. The moment was an important one; for the first time biotic considerations had deflected a major engineering enterprise.

The third event that marked a still greater degree of maturity in science was the proposal to build a new sea-level canal across the Isthmus of Panama. Nuclear charges would be used and the question was safety. If the man in the street had been asked, he might well have questioned the project on the basis of his newspaper veneer of science. But it seemed wise to commission a series of studies in the field. The answer, not surprisingly, was that while the technique was practical and the ditch could be made, the hazards of the ionizing radiation and certain other inconveniences involving the displacement of people would be greater than anyone was willing to accept, and the project was dropped after the expenditure of relatively small sums for what was mainly an examination of biotic hazards.

The progression of these three events toward dominance by biology was unavoidable. The transition was slowed somewhat by the Atomic Energy Commission's early reluctance to enter biology, at least environmental biology, in any significant way. But the transition was inexorable and the dominance of biological aspects predictable. So was the ultimate fate of the Commission.

The contributions of that period to knowledge were legion. We made spectacular advances in our understanding of the transport of particulate matter through the atmosphere from studies associated with the bomb tests of the 1950s and the early 1960s. We learned that rates of transport around the world through tropospheric circulation were to be measured in days to weeks, but exchanges between the northern and southern hemispheres were much less rapid. We learned much about exchange rates between stratosphere and troposphere, that mixing occurs in the spring and in middle to high latitudes. We also started a grand series of tracer studies that have given us a basis for measuring mixing rates of the oceans over decades, a topic obviously of vital importance if we are to provide a credible basis for balancing the world carbon budget and budgets of other elements as well.

The experience with the physical and chemical exchanges of the surface of the earth is revolutionary, convincing evidence that man was now a worldwide force capable of significant modifications of his habitat globally. It is hard to hide that sort of information. But the physical and chemical aspects were only part of the drama that, as with almost all of science, grew in complexity as experience accumulated. Suddenly, biotic mechanisms that had been obscure, the private preserve of a few biologists, became front page news. The absorption of radioactive elements by microbes in the sea might lead to high concentrations in fish, although the concentrations in the water were low. The importance of the discriminatory functions of food webs became another frontier in science and a major consideration in all analyses of toxic substances and their effects. The realization that human food webs could not be isolated from natural food webs came slowly. Similarly we gained the basic understanding that it is possible to toxify the general environment, to change the biota, and in so doing to make many awkward, even intractable, problems for man. Although we may as scientists deplore the time required for these advances, the progress was nonetheless rapid. The biotic studies required precision in the range of nanograms and picograms, nanocuries and picocuries, and these levels of precision were and are routinely used. This in itself was a revolution: concern with one part per billion in the environment.

But most important of all was the remarkable advance in the understanding that the earth is a biotic system and that the movement of toxins, once they enter the biosphere, is not to be described on the basis of physical or chemical processes alone, averages or thresholds, but is subject to quite surprising and often unpredictable patterns of concentration in transport by biotic mechanisms.

The same period was marked of course by what still stands as one of the great triumphs of science and politics: the 1962 treaty banning atmospheric tests of nuclear bombs. The treaty is, I hope, the prototype of a series of such treaties necessary to any effective approach to management of the biosphere. The background of this treaty was 15 years of hard-driving study, marked by all the surprises, tragedies, and frustrations in BRAVO, the CASTLE series, the CROSSROADS series before it, and others, plus extraordinary efforts on the part of diplomats and "scientists turned diplomats" outside the AEC. It was a triumph and stands today, still unsigned by major nuclear powers, China and France, but a powerful international deterrent working toward responsible behavior on the part of all nations. Such advances require nurture and strengthening. The nurture must come in part from science, through push from within, not pull from the top; through continual additions of knowledge and understanding, not sterile reiteration of long-held positions, however valid they may seem.

The progress made in what I think of as ecology during that period was phenomenal, important as basic knowledge of the biosphere and important in its use by government. The challenge of that time seems simple now, 25 years after BRAVO, partly because the issues were clearer then and partly because problems always seem simple in retrospect.

The challenge now is in fact more diffuse, larger, more pervasive, and developing more rapidly, but I would suggest that it is not different in fundamental ways. The problems of using and controlling nuclear power remain; we have in addition the problems of power generation, the recycling of plutonium as a fuel, the challenges of coal gasification, and synthetic fuels, and the apparently inexorable process of biotic impoverishment associated with the spread of human activities. We have the CO_2 problem, the acidification of rain, the toxification of waters worldwide, and the accelerating impoverishment of the land. We have a series of interlocking economic problems including persistent and apparently uncontrollable inflation, certainly linked importantly to the increasing demand for all resources and to the cost of replacing resources that have been diminished in value or lost. And we have the confusion generated perpetually by arguments for short-term economic gains at the cost of what is always presented as a negligible incursion on environmental quality.

The problems seem diverse and diffuse, complicated by the day-by-day pressures and the week-by-week shifts in emphasis brought by squalls in Washington and elsewhere. What we lack now is a set of objectives to which we can remain steadfast, a set of objectives that can be used along the way to interpret and answer and steady the course of science and government. We need the strength to say that we know a lot, that experience counts, that ad hoc data are not always required to address each new environmental problem, that the principles of environment are definable and usable and sustainable in court and elsewhere in government, that we need not tie up our scientific establishment in an endless and bootless pursuit of detail in defense of each initiative of government or industry but that answers on principle can suffice. We need not learn again and again at Bikini and Cape Thompson and the Isthmus of Panama that the further distribution of radioactivity into the general environment is unacceptable.

Just as nuclear physics is screaming for its simplifying theory, so the science of environment is crying for relief from the burdens of detail. The science is obviously on a treadmill; it cannot stop with mere description of how the world works and definition of the principles of ecology. It must reach beyond and show the editorial writers of the Wall Street Journal that destruction of renewable resources causes inflation, too. We are being asked to provide unpopular answers, to measure and define the limits of resources, to draw the unhappy, declining curves of human welfare versus population, and to enter more and more often the uncomfortable controversies that mark the interface of science and government.

Experience is not encouraging. Every generality can be challenged; special interests can always raise questions, and scientists quite properly prefer to have their positions documented with ad hoc detail. Nonetheless, most decisions in management of resources are made on the basis of experience, not on the basis of fresh data or even fresh analyses. The greatest advance both in the development of the basic science and in the applications of that science in public affairs would be through the development of a stronger body of theory, a body of theory competent to compete with the simplifications of economic theory that emerge daily in government and appear almost minute-by-minute in the public press.

We are still working with the wrong general plan; the economist's hypothesis that continued human welfare is based on universal and pervasive growth in all aspects of human affairs, that compromise along any gradient is appropriate, when the gradient itself may be wrong. We need a clear alternative to the growth model for society. The alternative is probably not a single hypothesis but an array of hypotheses identified as the "ecologist's model" of environment. An important

contribution to this end was made recently by a group of ecologists working with Dr. Phillip Johnson of Oak Ridge Associated Universities and was published as a paradigm for ecology. The idea is an excellent one, but no scientist wishes to accept another's model and this one has not yet been widely accepted. Perhaps it was not sufficiently controversial to have been incorporated into the special sector of scientist's minds reserved for personal piqur and bitter argument. Here is the challenge: The definition and redefinition of ecology and the introduction of that definition, complete with principles and operating instructions, into management of the biosphere.

The step is subversive, as Paul Sears pointed out years ago, in that it requires a new attitude, a major shift in the approach of government to management of resources. Yet we have shown over the past ten years that the system we have, at least in the United States, is sufficiently flexible to accommodate such shifts. We have shown the enduring power of science, the strength of simple truth, the interest of the public at large, and the basic sympathy of the political system. And we have shown the effects of the inexorable march of truth on the AEC.

Can a national laboratory operated under contract to the Department of Energy foment such a revolution? Why not? Once we recognize that all such efforts must be loved and cultured, just as marriages and governments and schools and morals, then we can accept the sometimes halting progress of science, see the contributions to theory, and build the new hypotheses necessary to offer the unpopular answers that are increasingly the role of science. The revolution is already underway and we hope that this new building will not contain it, but feed it and help us all in the very tough job we have ahead in formulating for the man-in-the-street a new perception of a rich and varied future for him and his children within a realm of resources that have the somewhat confusing property of being at once almost infinitely renewable and finite.

WATER RESOURCES: SIGNIFICANT ISSUES FOR THE NATIONAL LABORATORIES

Frank L. Parker
College of Engineering
Vanderbilt University
Nashville, Tennessee

F. I. AUERBACH: Good morning and welcome to the second day of our symposium "Perspectives in Ecology." Our first speaker this morning, Frank Parker, is an alumnus of the Laboratory and an alumnus of the parental organization that spawned this Division and the Health and Safety Research Division. Frank came here in 1956 to work in the Waste Disposal and Management Section, of which we of the radioecology group were also a part. Frank is an environmental engineer. In those early years, he served a very useful purpose, which was continuing my education, an education in the broadest sense of the term because I come here rather narrowly trained in ecology and I was getting involved more and more in a variety of interdisciplinary activities. I also came with a lot of the biases that go with the "small ecology" that John Cantlon talked about yesterday. Frank introduced me to environmental engineering and how engineering people who work in the environment approach it. Then, over the next several years, we interacted in a number of programs that were concerned here with waste management environment. Frank proved to be a skilled and able leader with considerable insight on how to look at problems in the quantitative sense, which was characteristic of engineers at that time. Frank left in 1967 to go back to academia at Vanderbilt University where he was appointed professor in the College of Water Resources. He has maintained, however, a very active interest in the problems related to energy, and he and I continue to interact in a professional sense in various outside activities related to the mutual problems of energy and waste management. Frank also is an environmentalist, which is again something that we have to recognize is not in the same context. Frank believes that energy technology must be compatible with the environment, but it must also be cost-effective. It is a real pleasure for me to have him here to start off the morning. He is going to talk on water resources, significant issues for the national laboratory. Dr. Parker.

* * * * *

It is a great privilege and honor for me to be here at the dedication of this magnificent research facility. It is particularly appropriate for me that this symposium is taking place in the Daniel J. Nelson Auditorium because about 20 years ago Stan, Dan, and I were involved in what was one of the first multi-disciplinary investigations of the fate of pollutants in the environment. The Clinch River Study broke scientific ground in many areas, but perhaps most importantly it showed that engineers and ecologists could and must work together to help create the kind of environment we want to live in.

This morning I want to discuss the role of national laboratories in the solution of water resources problems. By water resources, I mean the whole suite of questions raised by the uneven distribution in time and space of sufficient water of the proper quality to satisfy our demands. I should note particularly that I said to satisfy our demands rather than our needs because our physiological needs are only two liters per day.

ANALOGY TO ENERGY PROBLEMS

As we start in the discussion, an analogy with the energy problems facing the country may be appropriate. In fact, if you can think of all of the problems, technical, institutional, legal, and social, facing us in energy and substitute the word water, you would hardly notice the difference, although you could make a case that, emotionally, water is more devisive particularly in the west. An example of the emotionalism is the recent Presidential so called "hit list."

Note that we are dealing with both renewable and nonrenewable resources. Ordinarily, we think of water as a renewable resource, but some of our ground waters are similar to our fossil fuels in that

they are renewable but only on a time scale that is incommensurate with our own needs. Therefore, the "mining" of ground waters on the Texas High Plains must shortly come to an end unless other ways are found to augment the supplies or to change the life styles of those in that area and of those of us who depend upon the output of their irrigated acreage. The amount mined today is approximately 25% of our total ground-water withdrawals.

In general, unless there is a major climatic change, the average annual rainfall over the contiguous United States is 30 in. and the average runoff is 8 in., but this is neither uniform over the country nor uniform over the seasons of the year, nor from year to year, which results in maldistribution problems equivalent to the glut of Alaskan oil on the West Coast.

With the amount of water fixed and the needs growing with increasing population, energy development and transportation needs, and demands for higher levels of environmental quality, auxiliary sources of water must be sought or the demand reduced. While the President has not yet declared the fight for water sufficiency to be the moral equivalent of war, he did declare in a major policy address on June 6th of this last year that water conservation and efficient use of water are urgent needs. The President had stated in his environmental message of May 1977 (CEQ 1977) that the nation needed a "comprehensive reform of water resources policy, with water conservation as its cornerstone."

Among reforms being implemented are changes in cost sharing and pricing leading to full cost pricing. But, as in energy problems, conservation and reduction in demand through the market mechanism are not sufficient. Further resources must be forthcoming by seeding clouds (compare with breeder reactors) as now only about 10% of the water vapor passing over the United States falls out as precipitation; by desalination (coal conversion processes); by water reuse (waste heat utilization); or by water transport from one region of the country or world to another (much as the North American Water and Power Alliance Plan) (Stegner 1965); or by towing icebergs from Antarctica (which can be compared with coal slurry pipe lines or transport of Algerian liquid natural gas to the United States).

So you can see, as with energy, we have serious water problems in the United States, with many solutions similar structurally to those for the energy crisis. Fortunately, the water problems do not appear to be so severe, and the solutions basically must rest with us, although our common water resources with Canada and Mexico will require international agreements and understanding (also, note here the analogy with energy).

REVIEW OF WATER RESOURCES STUDIES

The national interest in water problems is not new. The first funding by Congress was in February 1809 for improvement and extension of the Corondelet Canal for enhancing the defense of New Orleans. In 1824, Congress appropriated funds for removal of sand bars and trees in the Ohio River. Since World War II, we have had a spate of reviews of our water resources needs, starting with the 1950 President's Water Resources Policy Commission, "A Water Policy for the American People" (GPO 1950); in 1955, President Eisenhower's Hoover Commission on Organization of the Executive Branch of the Government, "Report on Water Resources and Power" (GPO 1955); in 1961, Senator Kerr's "Report of the Select Committee on National Water Resources" (U.S. Congress 1960); in 1973, The National Water Commission's "Water Policies for the Future" (NWC 1973a); and finally the Section 80 study of the Water Resources Council "Planning and Cost Sharing Policy Options for Water and Related Land Programs" (WRC 1975) in 1975. A jaundiced view might be that they have had decreasing impact. Although the National Water Commission's "Water Policies for the Future" (NWC 1973a) met a quick death, a number of its ideas have since been revived by President Carter.

In the President's May 1977 message, he directed the Office of Management and Budget, the Council on Environmental Quality, and the Water Resources Council "to conduct a review of the present . . . Federal Water Policy" (CEQ 1977).

As an outcome of that study, the President, on June 6, 1978, presented a Water Policy Message (President of the United States 1978) which is designed to meet the following four objectives: (1) improve planning and efficient management of Federal Water Resources programs to encourage projects that are economically and environmentally sound, (2) provide a national emphasis on water conservation, (3) enhance federal-state cooperation and improve state water resources planning, and (4) increase attention to environmental quality.

These objectives can be contrasted with the Report of the National Water Commission (NWC 1973b), "New Direction in U. S. Water Policy," in 1973:

(1) The level of future demands for water is not inevitable but derives in large part from policy decisions within the control of society.

(2) There is a shift in national priorities from development of water resources to restoration and enhancement of water quality.

(3) Water Resource Planning must be tied more closely to land-use planning.

(4) Policies should be recommended that will lead to the conservation of water, motivate better use of water, and reduce water losses by improved efficiency.

(5) Sound economic principles should be applied to decisions on building water projects (consumers' willingness to pay full costs).

(6) Laws and legal institutions should be re-examined in the light of contemporary water problems. The law prevents or discourages the transfer of water rights to more valuable economical uses and provides insufficient protection to in-stream values. Riparian law does not provide for resource planning and development, and ground-water law must be modernized.

(7) The development, management, and protection of water resources should be controlled by that level of government nearest the problem and most capable of effectively representing the vital interests involved.

The conclusions might also be compared with the conclusions of the pathfinding study, "The Outlook for Water," by Wollman and Bonem (1971) which found that:

(1) It will be increasingly difficult to maintain a high-quality water environment over the next half century unless the nation's product mix or production processes are changed to reduce the waste output per unit of GNP, or unless the needs for high-quality water are reduced (and/or the costs of desalination are dramatically reduced or other means of augmenting our water resources are made available), or there is a large-scale shift of waste-producing activity to coastal regions.

(2) Over the next half century the Southwest will remain the nation's hard core area of absolute water shortage.

(3) Problems of water quality will be larger and more difficult than those of quantity.

The report points out that unanimity on projections of water resources needs is difficult to achieve because (1) most water problems are local or regional; (2) there is no true market for water; (3) water from the same source is used for many different purposes and the various uses affect the supply in many different ways; (4) water quantity is inextricably linked with quality, volumes alone are not sufficiently descriptive; (5) there are few absolute requirements for quality or quantity; (6) if one could reach concensus on quality and quantity and distribution of that quantity, there are an infinite number of ways of achieving that goal; and (7) all of this is subject to a wide variety of uncertainties such as rate of technological advance, development in national and world policies, and unpredicability of human events.

The most recent look at the Nation's Water Resources is, of course, the Second National Water Assessment (WRC 1978) by the U.S. Water Resources Council which was released last week.

In the final draft, the following conclusions were reached:

(1) Water-quality management must be integrated with water quantity management.

(2) Ground-water management must be integrated with surface-water management.

(3) Water-management policies must be responsive to changing national needs and priorities.

(4) Flood-water control through structural and nonstructural changes must be accelerated.

(5) Quality of drinking water must be safeguarded.

(6) Water-management decisions should be based more at the state and local levels.

(7) There needs to be nationwide, coordinated, management and planning of water resources development.

The Council also noted that there had been insufficient attention to environmental quality in the past and that past water development and management programs had contributed substantially to national objectives for economic development.

Substantively the Council's assessment found that total withdrawals in 1975 from the contiguous United States was 335 billion gallons per day (BGD) and the consumptive use 105.5 BGD. The Council projected that withdrawals in the year 2000 would be 303.9 BGD and consumptive withdrawal would be 133.6 BGD. The mean flow in rivers in the contiguous United States is 1240 BGD.

Therefore, if the water quality were satisfactory and amounts uniformly distributed, there would be no water problem. The question then is how to achieve that goal. To solve that, we need to know the demands for and the supply of the resource.

The perceived critical problems are identified in the report as: (1) inadequate supply; (2) ground-water depletion; (3) surface-water pollution; (4) ground-water contamination; (5) domestic water supply contamination; (6) flooding; (7) erosion and sedimentation; (8) dredge and fill; (9) drainage; and (10) bay, estuary, and coastal waters degradation.

State officials perceived water quality problems somewhat differently as: high level of nutrients, bacterial pollution, high concentrations of suspended sediment, and heavy loading of oxygen- demanding material (EPA 1978). It should again be emphasized that federal policies have a profound effect on the severity and even the existence of the problems, as was pointed out in the National Water Commission Report.

As in all studies, alternative futures are not predictions of what will actually take place but only estimates of the ranges of needs. Consequently, delineations of the actions to shape the future that we want are the purpose of these studies.

One of the highlights of this second national assessment is the disaggregation of the United States from 21 water resources regions into 106 subregions. However, even this smaller subdivision still hides the fact that average conditions are usually not the difficult conditions. This observation was highlighted in the recent book, "The Uncertain Search for Environmental Quality," where it was pointed out that the worst conditions in the Delaware River occurred after rainstorms (when the combined sewers overflowed into the river) rather than during routine low-flow periods (Ackerman et al. 1974).

CAVEATS

There has been some confusion in the government and in the national laboratories between what is interesting scientifically and what is necessary to implement national policies. This was most recently evident in the Office of Science and Technology Policy (OSTP) Document on Geological Disposal of Radioactive Wastes (OSTP 1978). Note that we are not talking about basic scientific research which must go forward but about mission-oriented programs and how best to fulfill that mission. For that purpose, we can turn back to the 14th century philosopher, William of Occam, whose principle, "Occam's Razor," stated that what can be done with fewer assumptions is done in vain with more. The assessment, of course, did not follow this principle, but in a very complicated fashion tried to include every detail. As a result, it had great difficulty in reconciling divergent state and federal predictions of water needs. If they had adopted the principle of alternative futures, then both state and federal predictions could have been included within the range of alternative futures.

Before turning to specific water problems and how the special expertise of the laboratory can be brought to bear upon them, we need to analyse how national laboratories operate and their relative strong points and weak points.

Environmental research unlike most other kinds of research cannot be conducted exclusively in the laboratory or by paper studies. There has to be field verification of the predicted results on the

basis of paper and laboratory studies. The popular mode of Washington-directed research is to prepare a mathematical model and then to take action based upon the outcome of the mathematical model. This, of course, is the wrong way to proceed. Only a few model developers actually believe in the accuracy of the magnitude of the model results, with a slightly higher percentage believing that the model outputs will reflect the direction in which changes will actually occur as a result of change in input. In the work of the national laboratories, Occam's principle needs to be firmly set to the forefront to avoid these erroneous and complicated mathematical models of how the environment functions. In most of these models, the simulations are based upon first principle assumptions and require enormous amounts of detailed data to generate transfer coefficients from one compartment of the environment to another. Rarely are these useful in the predictive mode, though multimillion and multibillion dollar programs, such as EPA's 208 Area-Wide Planning, are frequently based upon their output. Rather, it is becoming evident that general overall comprehensive solutions are not working. They ignore the localized empirical evidence which would give some clues to the resolution of these problems. Simplified models, using regionalized regression analysis, might be more useful for prediction and implementation than the complicated first principle models.

Augmentation with flexibility based upon the way the world behaves might be more useful as an approach rather than radical changes based upon the way the world is supposed to behave. We can see some movement in that direction in the recent comprehensive assessment of the Willamette River Basin, Oregon, by the U.S. Geological Survey (Rickert et al. 1976). Their conclusions were:

"Unfortunately, the proliferation of sophisticated, general-case river-quality models (Qual–II and Explore) has caused a preoccupation with mathematical development, solution techniques, and computer programing. Although such technical model problems are important and deserve continuing attention, they tend to divert attention from analysis and understanding of river hydrology and the phenomena being modeled." ". . . and future efforts at applied modeling should minimize extraneous mathematical sophistication and maximize the understanding of river phenomena" (Hines et al. 1975).

More generally, we can see the wisdom of this approach and of analyzing alternative futures if we look at the U.S. Water Resources Council's background information (WRC 1973) from it's "Principles, Standards, and Procedures for Water and Related Land Resources Planning" which appeared in the Federal Register on September 10, 1973, and upon which all projections of water needs are to be based. These are shown in Table 1. It can be seen that in a few short years the projections would have been changed, and rather drastically.

Table 1. Water Resources Council projected data (1973)

	Year			Rate of increase/year
	1968	1980	2000	(%)
Population (10^6)	201	235	308	1.3
Unemployment rate (%) 2000	3.7	4.0	4	
GNP (1958 $\$10^9$)	708	1154	2506	4.0

In trying to predict water requirements, the first question that we need to look at is a methodological one. As Neils Bohr is reputed to have said, "prediction is difficult, - especially about the future," but it is the future that we are concerned about and what water problems are likely to be 10 to 20 or 30 years from now. From trying to predict energy requirements, you are all familiar with the methodological problems. However, water has one added variable, the stochastic nature of the supply. We can't predict whether it will be a dry year or a wet year or whether it will be an especially hot or cold year. Consequently though, I shall reply primarily on the just-issued Second National Water Assessment by the Water Resources Council (1976) and the recently completed comprehensive "Review of Federal Water Policy." I do have a profound disagreement with their methodology. Because the future is so uncertain, to indicate as the Water Resources Council did that the expected year-2000 runoff will be 1,339,083 MGD gives an erroneous sense of accuracy to the figures. More

importantly, it hides the fact that this is only the most likely value for the conditions assumed. Even for the conditions assumed there is a distribution of expected outcomes, but changes in predicted (assumed) conditions can drastically alter the outcome (i.e., the water flows needed). Consequently, a sensitivity analyses of the outcomes, with credible changes in inputs, would provide a far more useful set of numbers (i.e., a reasonable range of possible outcomes). This strategy has been tested on an analysis (James et al. 1969) of the Potomac River where, in predicting future water needs, four of the input quantities were varied as follows:

On the supply side:

(1) Stream-flow predictions were based on 10- or 50-year flow information,

(2) Stream-quality predictions were based on two quality models: one utilizing 5-day biochemical oxygen demand, the other using the ultimate BOD,

(3) Quantity was based on expected business conditions and 125% of expected business conditions, and

(4) Quality was based on environmental standards of 4 or 5 mg/liter.

The analysis of variances of the results shows the mean square values of the months in which the target dissolved oxygen was not met to be:

	50-year simulations	10-year simulations
Means	597,435	22,633
Waste load and water demand projection	114,864	4,829
Water quality objective	46,683	2,023
Water quality model	8,193	200
Hydrology	205	166

Therefore, one would conclude that changes in demand dominate the outcome. Even this is not necessarily true since the analysis was run on a restricted range of conditions. Because the outcomes are not linearly related to the inputs, if we had chosen other points on the spectrum of choices, we might have had quite different outcomes.

WATER RESOURCES PROBLEMS

Now that we have outlined a framework of analysis, let us look at some of the significant issues in water resources and how the national laboratories can help resolve them.

The second assessment notes that the problems are interrelated, and solutions to one have an impact on the others.

Inadequate Water Supply

Inadequate supply is the excess of demand over available water. Therefore, the solution can be approached from both ends of the spectrum: provide more water and reduce demand. In the assessment, it was noted that 70% of the 106 aggregated subregions of the contiguous United States have water supply shortages at present outputs and efficiencies.

Although it has been previously mentioned that there is an average daily streamflow of 1200 BGD, only 55% of the flow is available 95% of the year. But even that is not always available because that would mean the capture and utilization of the total flow. Though there is a total storage capacity in all reservoirs in the United States of 224,600 billion gallons which, if released in

one year, would equal 615 BGD; previous analysis by Piper indicated that only the median flow could be utilized or a little over 54% of the total flow (Piper 1965). It is recognized that as storage increases so does evaporation. It is also obvious that it is those regions where water is in shortest supply that evaporation is the greatest. The utility of further capture and storage must be carefully evaluated.

More likely, additions to the available supplies will be from more efficient use and reuse of surface water and ground water, from desalination, and from weather modification.

Water reuse is subsumed under conservation in the Water Resources Council's list of problem areas. We shall look at what opportunities there are for reuse, but first let us look at some of the difficulties in instituting such savings.

As in energy conservation, there are costs involved in water conservation: capital costs for more efficient equipment, more intensive labor practices, or sacrifices in output or convenience.

The former mayor of Nashville was ahead of his time and, in 1972, asked us to do a survey of water-using industries in Nashville because the sewage-treatment plant was overloaded. We were able to show that a number of industries, and in particular the meat processing industry, could save money by reducing their water usage. Some of the waste material was diverted to solid wastes, but if the same amount of waste were discharged with a lesser amount of water, this would increase the concentration of wastes and its impact (Gammill and Parker 1975).

Other deterrents to conservation are (1) persons who save the water may not benefit from that extra water, (2) water may be so underpriced that the costs of saving are more than the benefits, (3) existing contracts may prevent raising prices to reflect the cost of the service and the value of the commodity, and (4) assorted institutional and legal barriers must be overcome. The potential is great and some conservation is already proceeding due to higher prices for water and the impact of the Federal Water Pollution Control Act (FWPCA 1972) which, in some instances, is making it easier and cheaper for industry to recycle waters rather than discharge them.

In 1975, water withdrawal and consumption by industry in the United States was as shown in Table 2 (WPC 1978, p. 19). Although not of particular concern to us in the East, irrigation (with 47% of the withdrawals and 81% of consumptive use) is a prime candidate for conservation. Potential savings are 20 to 30% of the use of 30 to 45 BGD. This could be accomplished by:

(1) Improvements to off-farm delivery system (such as lined and covered canals, computer monitoring and scheduling of releases, and automated weirs and gates), and

(2) Improvements to on-farm water management practices (such as irrigation, i.e., based upon crop need, nighttime rather than daytime irrigation, better land preparation, and more efficient irrigation systems (such as sprinkler or drip irrigation).

Table 2. Water withdrawal and consumption in the United States by industry 1975

	Withdrawal (%)	Consumption (%)
Irrigation	47	81
Steam electric generation	26	1
Manufacturing	15	6
Domestic	7	6
Minerals	2	2
Commercial	2	1
Other	1	3

Electric steam generators (with 26% of withdrawals) are also a fertile area for conservation of water as well as energy. If the waste heat could be utilized, then less cooling water would be required. Cooling towers would decrease withdrawals but would increase consumptive use of water (unless dry towers were used). Towers are more expensive than once-through cooling.

Manufacturing (with 15% of withdrawals) is also a candidate for conservation, with in-plant treatment and reuse being the most likely route. However, alternative manufacturing processes also can play a role in conservation. To produce the finished product, water-use varies even with the same industry; for example, water used to produce one ton of steel varies from 1900 to 65,000 gal and that used to produce 100 lb. of sugar from sugar beets varies from 75 to 3200 gal.

Domestic, municipal, and commercial sectors which use 7% of withdrawal and 6% of consumptive water offer opportunities for conservation by using water-saving devices, correcting leaks, and watering green areas only to maintain appearances.

Water supplies could be augmented by:

(1) Weather modification. Seeding winter storms in the western United States has increased precipitation 5 to 25%. Seeding of summer cumulus clouds has had mixed success, but projects in the Dakotas have increased total seasonal rainfall 10 to 20%.

(2) Desalination plants. However, desalting is still very expensive and most likely will not become more widespread unless there is a significant decrease in energy costs, which is highly unlikely.

(3) Decreasing ground-water depletion resulting from trying to increase inadequate supplies. The characteristics of depletion are diminished water pressure, declining spring and streamflow, land subsidence, and salt-water intrusion. Note that depleting spring and streamflow makes the water supply even more inadequate.

(4) Decreasing surface-water pollution and ground-water contamination, which have resulted in inadequate supplies for pure water.

The EPA has recently shown that about one-third of the oxygen-demanding materials, two-thirds of the phosphorous, and three-fourths of the nitrogen discharged to streams comes from dispersed (nonpoint) agricultural sources.

The degradation of our surface water also affects our foreign policy. The Yuma plant of the U.S. Bureau of Reclamation will desalt 100,000 acre-ft of Colorado River water per year so that the salinity at the Morales Dam, Mexico, does not vary more than 125 ± 30 ppm from that available at the Imperial Dam in the United States. Though the United States had kept its guarantee to Mexico on the quantity of Colorado River water to be delivered the degradation caused the water to be unacceptable, and as a result, was a source of friction between the two countries.

Ground-water contamination is more serious than surface-water contamination because of long transport times and lack of sunlight, the contamination tends to persist for long time periods. Because 50% of the population derives its drinking water from ground water, the consequences can be severe.

Domestic water supply contamination is a result of the contamination and pollution of the surface and ground water. Many water treatment systems do not remove all the pollutants, particularly the viruses, toxics, and carcinogens. The costs of monitoring and treating these waters are high. This has led to suggestions for dual water systems, one of high purity for drinking water and a second of lower purity for other uses. The increased concentrations of and concern about the toxics and carcinogens are causing a revision in the view that upstream treatment only benefits in stream use. Downstream users would also significantly benefit by upstream removal since in-stream degradation of these types of wastes is not important.

This discussion completes the water insufficiency problems identified in the Second National Assessment.

If we now discuss bay, estuary, and coastal water degradation, we would treat those problems that have chemical, biological, and physical components. These regions are essential for maintenance of fisheries and wildlife. Moreover, they are the source of major recreational opportunities for more than 80% of the nation's population.

The remaining four problems: flooding, erosion and sedimentation, dredge and fill, and drainage are primarily physical problems. All 10 problems, of course, have legal, institutional, and competing use difficulties.

In our society, in-stream uses (boating, fishing, and swimming) play important roles. The assessment has assumed that if all other problems are solved, the in-stream uses will be satisfied. It is not completely clear that this will be the case because consumptive use of water increases even though withdrawals remain approximately constant.

ROLE OF THE NATIONAL LABORATORIES

The national laboratories are unique collections of highly talented individuals from a wide range of disciplines (scientific, engineering, social sciences, and the humanities) with the laboratory and field facilities necessary to deal with these problems on a sufficient scale to have some chance for success in their resolution.

In all of these problems, however, it must be recognized that there are conflicting values, such as at Tellico Dam where reservoir water-type recreation conflicts with white water recreation, or in the Southwest where irrigation water-use competes with manufacturing water-use. One can easily see the role policy plays if one compares the per-capita withdrawals in the New England and Mid-Atlantic regions, approximately 450 GPD, with the withdrawals in the Southwest, Lower Colorado, Rio Grande, and Texas-Gulf Water Region, 3050 GPD. With the same per-capita usage the Southwest could support seven times more people than it does now. There can be no technical fix until these policy conflicts and value conflicts are resolved. A recent volume (Tribe et al. 1976) on this topic, "When Values Conflict," deals with conceptual differences in resolving the Tocks Island controversy, with water supply, recreational, and farmland problems, and with different beneficiaries than losers, etc. In the foreward to the volume, Laurence Tribe notes that issue became a "classic" instance of Hegel's conflict of right against right. As their research progressed they found themselves farther apart on resolution techniques than they were when they started. As he notes, "For some of us there can be no satisfactory way of talking about, much less acting upon, issues dominated by value controversy without a commitment, necessarily subjective, tentative, and self-correcting, to an evolving moral conception of man and his relationship to nature. For others among us, the very idea of any such commitment, however evolutionary, seems impractical and abstract; they approach the issues in very different terms. For them, the path of wisdom seems rather to be composed of the incremental analytic and decision-making techniques in a direction that, among other things, gives greater recognition to value conflicts and to the possible alternatives that might help resolve them.

" . . . we all rest most of our hopes for improvement in the short run on a more creative deployment of existing scientific and analytic resources, resources that can often circumvent value conflict and value uncertainty by fashioning options, and perhaps even reshaping preferences, so as to satisfy seemingly irreconcilable constraints" (Tribe et al. 1976).

The latter, short-run improvements appear to me to be the vital role that the laboratory can play in resolving the major water resources problems previously enumerated. The laboratories have the staff and the technical expertise to indulge in meaningful-sized field verification, as well as the intellectual muscle to do the theoretical and laboratory and pilot-plant-scale research that is required to solve these problems. In addition, the laboratory has available the latest analytical tools and a reasonable complement of social scientists to look at all facets of the problems. Equally important, the laboratories have no built-in biases toward specific types of solutions and would look at the total ranges of choices for solution.

The first six problems may prove more suitable to the scientific complexes at the laboratories in that they are multidisciplinary. They require large-scale modeling and field verification and can use high technology in identifying and solving the problems. It also appears as though they are likely to have some general solutions that are transferable to more than one region.

In the long run, though, we return to Tribe et al. (1976) and the unanswered questions that his study raised; " . . . questions about 'nature,' its cultural and historic meanings and man's relationship to it; about the place of knowledge and analysis in situations of value conflict; about the actual making of hard choices; and about the evolution of decision processes . . ."

Here, the laboratory has no special competence. But answers to these basic questions need to be sought, and the laboratory must play its role along with philosophers and social scientists.

REFERENCES

Ackerman, Bruce A., S. R. Ackerman, J. W. Sawyer, Jr., and O. W. Henderson
1974. The Uncertain Search for Environmental Quality. Free Press, 1974.

Council on Environmental Quality (CEQ)
1977. Presidential environmental message of May 23, 1977. As quoted on p. 354. IN The 8th Annual Report of the Council on Environmental Quality. Government Printing Office, Washington, D. C.

Environmental Protection Agency (EPA)
1978. National Water Quality Inventory - 1977 Report to Congress. Government Printing Office, Washington, D. C.

Federal Water Pollution Control Act (FWPCA)
1972. Federal Water Pollution Control Act Amendment of 1972. P.L. 92-500.

Gammill, Adrian M., and Frank L. Parker
1973. A survey of selected water-using industries. Office of the Mayor, Metropolitan Nashville-Davidson County, May 1973.

Government Printing Office (GPO)
1950. President's Water Resources Policy Commission: A Water Policy for the American People. Government Printing Office, Washington, D. C.

Government Printing Office (GPO)
1955. U. S. Commission on Organization of the Executive Branch of the Government: Water Resources and Power. Government Printing Office, Washington, D. C.

Hines, W. G., D. A. Rickert, S. W. McKenzie, and J. P. Bennett
1975. Formulation and use of practical models for river quality assessment. p. B-4. IN U. S. Geological Survey Circular 715-B.

James, I. C., II, B. T. Bower, and N. C. Matalas
1969. Relative importance of variables in water resources planning. Water Resour. Res. 5(6):1172.

National Water Commission (NWC)
1973a. Water Policies for the Future. Government Printing Office, Washington, D. C.

National Water Commission (NWC)
1973b. New Directions in U.S. Water Policy. Government Printing Office, Washington, D. C.

Office of Science and Technology Policy (OSTP), Executive Office of the President
1978. Isolation of Radioactive Wastes in Geological Repositories: Status of Scientific and Technological Knowledge (Draft). July 3, 1978.

Piper, A. M.
1965. Has the United States enough water? U. S. Geological Survey Water Supply Paper 1797.

President of the United States
1978. Water Policy Message. June 6.

Rickert, David A., W. G. Hines, and S. W. McKenzie
1976. Methodology for river-quality assessment with application to the Willamette River Basin, Oregon. U. S. Geological Survey Circular 715-M.

Stegner, Wallace
1965. Myths of the western dam. Saturday Review, October 23, p. 31.

Tribe, Laurence H., C. S. Shelling, and J. Voss (eds.)
1976. p. XIV. IN When Values Conflict. Ballinger, Philadelphia, Pennsylvania.

U. S. Congress
1960. Select Committee on National Water Resources - U. S. Senate: Water Resources Activities in the United States. 86th Congress, 2nd Session, December.

Water Resources Council (WRC)
1973. Principles and standards for planning water and related land resources. Fed. Regist. 38(174):24821.

Water Resources Council (WRC)
1975. Options for Planning Objectives. November.

Water Resources Council (WRC)
1976. Technical Reports of Section 80 (C). August.

Water Resources Council (WRC)
1978. The Nation's Water Resources - The Second National Water Assessment. Draft Copy, April 13, 1978.

Wollman, Nathaniel, and Gilbert W. Bonem
1971. The Outlook for Water. Johns Hopkins Press, Baltimore, Maryland.

*****

QUESTIONS AND ANSWERS

S. I. AUERBACH: Frank, you have given us a comprehensive, almost mind-boggling, overview of the problem and one in which in trying to think about it and how to approach it, you are sort of left with the same feeling that we are left with in a lot of other problems; that is, we as a society certainly in the western world are not yet under a sufficient kind of selective pressure that we can overcome the institutional questions that you have described.

F. L. PARKER: I think that is true, and I think one of the things the President has asked a number of the federal agencies to do in this reassessment is to look at precisely that problem. There apparently will be some message to Congress to set up a Department of Natural Resources which would try to overcome one of these institutional problems. It will raise others as you are well aware.

S. I. AUERBACH: Any other questions?

J. S. OLSON: Your first caveat was an assumption of no climatic change. Some of us are confirming the liklihood of some nontrivial change in climate; significant change seems more likely now than status quo. How sensitive are some of these issues to real possibilities of climatic losses of available water, at least in the latitudes that cover most of our country. Increased water demands for technology and irrigation could leave us on the ragged edge of drought in some of the very places where models suggest that available moisture (precipitation minus loss) could be lower or less reliable.

F. L. PARKER: Jerry, what you have said is absolutely correct. I think it brings up more strongly the point I was trying to make that we should not pick a small number, as the Water Resources Council did, and say that this is the number. This may be the number we expect in the year 2000 but there is a wide range of numbers that we may be faced with. We're really talking, I think, about the only sensible planning regime that we have some control over, the next 10, 20, to 30 years. I don't think that we are going to see (you may have more recent evidence) any major climatic changes in that period of time. We do know that in the long run there will be very major climatic changes. Those of us who are involved in long-term problems of radioactive waste disposal have to take that into consideration. We will be in a pluvial period sometime in the next 10,000 years or that order of time, and there will be major climatic changes. But we are talking about engineering structures and a time horizon of 10, 20, or 30 years. I don't think that climatic change should be a major consideration during that period of time. I think man's activities and our decisions will be far more important than climatic changes over that time period.

J. S. OLSON: But, Frank, the continued rapid fossil energy expansion within your 10- to 30-year time horizons starts burning the fuse, starting changes in carbon dioxide that might affect the climate. Commitments to start down the path of, let's say, dramatic western energy development would imply continuing escalating water demands that may lead to most need at the very time when warming and evapotranspiration cut the expected supply or reliability well below present levels. Present policy thus leads to risk of collision, even though our punishment occurs beyond your 30-year horizon.

F. L. PARKER: I think, as you are well aware, we already have problems in the west of water for energy supply. We must make some decisions whether we are going to have irrigation on farm lands or whether we are going to have energy development in those areas.

F. E. SMITH: You made some very reasonable statements about simplifying models for application, but when you go into a sensitivity analysis, are you a little more concerned with how much you are simplifying the model?

F. L. PARKER: I guess I am a bit. I think that it would work in a sensivitity analysis if the model is a reasonable approximation of what takes place in nature. That is not always sure, but at least then we would try to isolate and identify those inputs that are critical and that are most important. Now, if the model is totally wrong it doesn't help you a bit. So you have to assume that it at least conforms to what you see in nature. If we have the situation where the solution is counter-intuitive, then I don't really know what you are going to do under those circumstances. You may have some help on this topic later in the program.

A. M. WEINBERG: I have two points but first I want to say that I think you gave a beautiful talk on water. I've been listening to water talks for many years and this I think is one of the best I've ever heard and I want to congratulate you, Frank.

The other question that I would like to put to you goes like this. As you pointed out so very well in your talk, there is striking analogy between the considerations of water and considerations of energy. We used to say that people might use as much as 180 quads by 2000; in the last few years, sparked partly by the increase in the cost of energy but also by reexamination of population, production, and possibility of conservation, it's now practically conventional wisdom to talk about 100 to 110 quads by the year 2000 and there are some radicals who talk about only 75 or even 65 quads. Now, do you think many of those same considerations that have forced this downward revision of estimated energy demand would apply to water also? I wonder whether the water futurologists have gotten to this point yet.

F. L. PARKER: The last part of the question, I think, is easy to answer; they haven't yet, but the increasing pollution may make the situation somewhat different for water than it does for energy because we have not talked about the quality as well as the quantity. I think the quantity question is not the major consideration even today except in localized places. The quality problem is the difficult question and how we deal with it. I don't think people have thought enough about the future to take into account the reduction in demand for the more efficient uses of water.

A. M. WEINBERG: There is a further analogy between energy demand projections and projections of demand for minerals. Again, mineral resource futurologists have not gotten to the same degree of sophistication as the energy futurologists have. I hope the water community will look carefully at what the energy community people have done in respect to reducing demand as well as increasing supply.

F. L. PARKER: I think if you look at the second national assessment you would be very disappointed because they definitely have not done that in that case.

AUDIENCE: Did they use, for example, the most recent projections of utility rates?

F. L. PARKER: I'm embarrassed to say what they did use. In the draft version, which is the only one that I have seen (the published version only theoretically came out last week), they are still talking about a thousand 1000-MW reactors in the year 2000!

E. P. ODUM: Would it be possible to talk about a national policy of shifting irrigated food making to the well-watered areas. In other words, this would require homesteading or some kind of help from the federal government to transfer large farming operations to better-watered areas. If you can get the people who grow irrigated crops which are grown in

dry areas like Oklahoma or around Dallas to move to the Mississippi Valley or some other well-watered areas, where there's plenty of water, then you'll have the water necessary for energy development in dry regions. In other words, it is possible to talk about a national policy for a shift, one that would be no more radical than the earlier migration of the Oklahoma people to California in the dust bowl days or the great homesteading operations of the early west. It would have to be a national movement that would take people to water rather than the continuous increasingly expensive operation of bringing water to people.

F. L. PARKER: I think this deals with a social question and I don't believe I qualify as an expert in that area.

SYSTEMS ECOLOGY: THE STATE OF THE ART

George M. Van Dyne
Colorado State University
Fort Collins, Colorado

S. I. AUERBACH: Our next speaker is Professor George Van Dyne of Colorado State University. George is an internationally known leader in the application of systems analysis in various fields of ecology. He didn't start out that way though. George joined this laboratory in 1964. He had done his Ph.D. work in the fields of range management, working on the relationship between grazing ecosystems, kinds of plants, and how they affected and were affected by cattle. I was introduced for the first time to fistulas and stomach analyses and all of the things that ecologists out West do routinely. Here in the East we sort of thought of it as something out of this world. George is a very dedicated, hard-working individual, one of the most dedicated individuals I ever met. I want to give one little anecdote about George in the context of some present-day concerns. George was also a graduate of the "university of hard knocks." He is very businesslike, and he soon approached me and asked about our criteria for salary increases as well as the criteria for promotions. This was before we had the 3-3,2-2,1-1 business that we have today that all of you are familiar with. We started a discussion about what constitutes competent performance and what constitutes above-average performance and so forth. I asked his opinion about these things. George is very positive. He felt that a competent performance was about one paper per month, an above-average performance was about three papers every two months, and a superior performance was about two papers a month. And, by God, he came pretty close to that in the two years that he was here. It shook the rest of the staff completely. I'm not sure that there wasn't a sigh of relief when George went to Colorado State University in 1967. Anyway, while he and Bernie Patten and Jerry Olson were here, of course, they were responsible for the big impetus to systems ecology. At Colorado State he then became the first leader of a biome program. He organized the grassland [illegible]e which served in many ways to get the rest of us moving on our biome organizat[illegible] He led that program and has since, as I said, continued to develop his approach to systems ecology, particularly in the grazing land area, both nationally and internationally. It [illegible] a great pleasure to have George back after all these years. I will now turn the pr[illegible]am over to George Van Dyne.

* * * * *

Mathematical models have been used to analyze populations in ecology for about 150 years, but the field of systems ecology is less than 20 years old. Shugart and O'Neill here at ORNL are the compilers and editors of a volume of 27 key references of "Benchmark Papers in Systems Ecology"; the earliest of these papers was 1962. Work in systems ecology has followed an explosive growth pattern in the last 20 years. For several years now there has been published an international journal called Ecological Modelling, which contains many environmental models and a few basically ecological models. However, O'Neill et al. (1977) here at ORNL published a "Bibliography of Mathematical Modeling in Ecology" with more than 900 references. I have summarized in recent publications more than 120 grazingland models alone published in less than 15 years (Van Dyne et al. 1977).

As any new field develops, it is useful to draw together the results and reflect on these developments. There have been several recent attempts.

In 1976, the Environmental Protection Agency (EPA) held a conference on "Environmental Modeling and Simulation." This was the first time that an attempt was made to bring together models from air pollution, water pollution, ecology, and other environmental areas in an attempt to create one scientific field unto itself. More than 160 papers were presented at and published from that conference (Ott 1976).

In August 1978, three workshops were held in different parts of the world as a prelude to the Second International Congress of Ecology. These workshops focused on modeling problems, with emphasis on statistical ecology and simulation modeling. Separately, in August 1978, a symposium was held on modeling and simulation methodology in Rehovot, Israel. Again, separately, in August

and September 1978, a conference was held in Copenhagen, Denmark, on the state-of-the-art in ecological modeling (Jorgensen 1979). Still separate yet, in September 1978, a symposium was held at the Second International Congress of Ecology on the state-of-the-art in ecological modeling in Jerusalem.

These extensive and recent developments on an international scale emphasize the breadth of the field which precludes me from attempting to cover the entire issue of "The State of the Art in Systems Ecology." My objectives must be more modest.

OBJECTIVES

The major objectives of my talk are (1) to discuss key chronological developments in the field of systems ecology, (2) to illustrate major contributions of ORNL scientists, (3) to emphasize some "firsts" in important aspects of the field, and (4) to consider briefly a few of the needs of this area of science.

A CHRONOLOGY OF DEVELOPMENTS

In the Beginning

Ecologists have had available to them a long history of systems views of ecological systems since Lotka's book in 1925 (Table 1)(Lotka 1925). This view was strengthened by the outstanding work of Lindeman in Minnesota in 1943 (Lindeman 1942). These systems ideas were further stimulated by work in the late 1950s and early 1960s in which radioisotopes were used as tracers for field ecological studies of nutrient cycling and food chains. Efforts here at ORNL under Auerbach and at the Savannah River Ecology Laboratory under E. P. (Gene) Odum were outstanding contributions at this time.

H. T. (Tom) Odum began formalizing his ecological system ideas in the late 1950s (Odum and Pinkerton 1955), but really did not publish much specific analytical work until the middle 1960s. The late H. L. "Curly" Lucas in North Carolina began his biomathematics training programs in the 1950s and was contributing a great number of useful conceptual ideas beginning in the 1960s (Lucas 1960, 1964). B. C. (Bernie) Patten's 1959 paper on an "Introduction to the Cybernetics of Ecosystems" further stimulated thought and work on trophic-dynamic aspects (Patten 1959). But the real breakthrough was Jerry Olson's report in 1962, co-authored with Neel, which I will refer to later (Neel and Olson 1962).

Definitions of Systems Ecology

In 1964 Gene Odum really put the term "systems ecology" on the board (Odum 1964). Gene, then president of the Ecological Society of America, used the term "systems ecology" as follows:

> "...the new ecology is thus a systems ecology - or to put it in other words, the new ecology deals with the structure and function of levels of organization beyond that of the individual and species."

Shugart and O'Neill have characterized systems ecology studies and their difference from other ecological studies as:

(1) consideration of ecological phenomena at large, spatial, temporal, or organization scales,

(2) introduction of methodologies from other fields that are traditionally unallied with ecology,

(3) an emphasis on mathematical models,

(4) an orientation to computers, both digital and analog devices, and

(5) a willingness to develop hypotheses about the nature of ecosystems.

Table 1. Some key people, dates, and events in systems ecology

Lotka	1925	General philosophical basis of ecological energetics
Lindeman	1942	First thorough system-level field study
Odum (H.T.) & Pinkerton	1955	Concepts underlying energy-electrical circuit ideas
Patten	1959	Cybernetics concepts in ecology in relation to trophic dynamics
Lucas	1960	Theory and mathematical concepts clarified for applied biology
Neel & Olson	1962	Analog computer models of linear ecological systems
Odum (E.P.)	1964	Terminology of systems ecology
Olson	1965	Digital computer model of interseasonal dynamics of field system
Kerlin and Lucius	1966	Frequency response and sensitivity analysis program
Goodall	1967	Simulation with spatial considerations
Patten & Witkamp	1967	Mathematical model of microcosms
Smith (F.E.)	1969	Interactive population analysis via differing food webs
Kelly et al.	1969	Models and field process and state variable measurements developed concurrently
Bledsoe & Van Dyne	1969	Systems identification software and application to ecological models
Patten	1969	Sensitivity analysis in an ecological system model
Bledsoe & Olson	1970	Generalized simulator designed for ecologists
O'Neill	1971	Error analysis of ecological models
Walters	1971	Clear discussion of systems ecology
Reichle et al.	1973	International comparison of forest systems with linear models
Cooper et al.	1974	Cross-biome model experiments on given problem
Oak Ridge Systems Ecology Group	1974	Team authorship in a systems ecology group
Shugart et al.	1976	Frequency response analysis in an ecological study
Innis	1978	Large-scale, multiple-flow, nonlinear difference equation simulation model; field validated; experimentally tested

Some workers consider the realm of systems ecology to be that of using mathematics to study ecological systems. Although application of mathematical techniques to study ecosystems is an important part of systems ecology, it is far from being all of it. Systems ecology can be broadly defined as the "study of the development, dynamics, and disruptions of ecosystems" (Van Dyne 1966). I consider systems ecology to have two main phases - a theoretical and analytical phase as compared to an experimental phase. I will talk only about the theoretical and analytical phase.

Models in Systems Ecology

In the early 1960s, Crawford and Linsley (1966) published several versions of a hydrological model known as the Stanford Watershed Model. This model was concerned more with the groundwater flow and channel flow, however, than with infiltration and plant impacts on water dynamics. These models were important contributions but not ecosystem models.

In the 1960s, some models were being developed and published in the forestry field. For example, in the middle 1960s at the University of Georgia School of Forest Resources, there were unpublished reports concerning a type of simulation of industrial forest enterprises. Again, these were important efforts but not ecosystems models.

In 1965, K.E.F. (Ken) Watt organized a symposium on systems ecology at the AIBS meeting in Illinois. Subsequently, Ken discussed the meanings of systems analysis for ecologists and provided some practical guidelines for persons intending to develop simulation models (Watt 1966). About this time, C. S. (Buzz) Holling in British Columbia published on his long-term experiments on predator-prey relationships (Holling 1965). Neither of these individuals developed systems models until much later.

The major thrust in systems ecology started in the middle 1960s. It has, as a foundation, systems views in the publications of such individuals as Bernie Patten on the trophic dynamic aspects (Patten 1959), Olson on balance of producers and decomposers in ecological systems (Olson 1963a), and Gene Odum on the transfer of elements through parts of the system. Not many operational, numerically implemented models had been developed prior to the middle 1960s.

This brings us back to the Neel and Olson (1962) report of systems models from ORNL. These attempts at simulating ecological systems utilized differential equations. These equations were usually of first order and generally first degree and frequently were integrated on analog computers. In 1963, Jerry Olson published further on these analog computer models (Olson 1963b). By 1965, however, Jerry published on the use of a digital computer to solve system models of interseasonal dynamics of a field-system situation (Olson 1965). The emphasis still was on constant coefficients or time-varying coefficients in the linear equation systems. Because of the early modeling studies which impacted many scientists, I nominate Jerry as the "father of systems ecology."

At that time, Kerlin and Lucius (1966) at ORNL developed a computer code which readily facilitated making frequency response and sensitivity analyses of systems models. This tool and technique subsequently was utilized heavily by Patten and subsequently by his students. In 1967, Patten and Witkamp published on a mathematical model representing a microcosm study and used analog computers for the solution of the differential equations (Patten and Whitkamp 1967). By 1969, however, Bernie Patten had started using the digital computer system to solve the differential equations and provided, as far as I know, the first "quantitative" sensitivity analysis of an ecological system model (Patten 1969).

Specialized Software Systems for Ecologists

I think L. J. (Sam) Bledsoe was the first individual with detailed formal mathematics training to enter the systems ecology field. Sam was an undergraduate in mathematics at the Univesity of Tennessee but worked in ecology with the late Royal Shanks. Subsequently, he worked at the Oak Ridge National Laboratory, first with Jerry Olson and then with me, and eventually went on to Colorado with me in 1966 and now is at the University of Washington. But in the late 1960s, Sam, who is a wizard with software, developed two new tools for systems ecologists. The first of these published in 1969 was software for system identification developed for and applied to ecological models (Bledsoe and Van Dyne 1969). The second was a 1970 generalized simulator designed for solving differential equation systems for and by ecologists (Bledsoe 1970, Bledsoe and Olson 1970).

Systems Models and Field Experiments

Olson's (1965) paper reported on early analysis concerning the cesium-147 "sinkhole" forest. In this innovative experiment, trees were injected with cesium and subsequently various system parts were sampled over time to determine the cesium concentration. Thus, the field experiment provided validation data for the model. The model was developed after the experiment had been going on for some time. There were no early experiments for rate process information. The early models developed here were with constant coefficients or time-varying coefficients in differential equations systems.

Another first, at ORNL, was the report of Kelly et al. (1969) concerning simulation of two grasslands dominated by single species of either cool-season or warm-season growth habit. In this study, the field investigations and the modeling investigations were planned and carried out concurrently. Not only were driving variable and state variable data obtained for validation, but also rate processes were measured in the field in a few instances.

Systems Ecology in Textbooks

Although the above experiment was published as an ORNL report with limited distribution, the result of this study found its way into the two major ecology textbooks of the past two decades, as well as into readings, volumes, and other monographs. The books I refer to are, of course, Gene Odum's Fundamentals of Ecology (Odum 1971) and R. L. Smith's Ecology text (Smith 1974).

In Gene Odum's volume in 1971, the first textbook-level treatment of systems ecology designed for ecologists was written by Carl Walters, formerly a student at Colorado and since a faculty member at the University of British Columbia (Walters 1971). Carl and Buzz Holling and others teamed up in the 1970s to develop a unique "workshop approach" of developing, applying, and utilizing systems models of ecological and resource systems. This will be referred to later.

No detailed textbook on systems ecology exists. Ken Watt's 1966 edited volume (Watt 1966) and Bernie Patten's (1971, 1972, 1975, and 1976) volumes concerning modeling and analysis serve important roles as references for training in systems ecology. Pielou's books on mathematical ecology really don't focus on system dynamics or system optimization models (Pielou 1969). The Europeans have actively been developing monographs in this area which are extremely useful guides in teaching, particularly at the undergraduate level [(e.g. see de Wit and Goudriaan (1974), Jeffers (1978), and Brockington (1979)], but these are not suitable for an in-depth graduate course. Further aspects of books in this field are discussed elsewhere (Van Dyne 1977), but at least two textbooks in the field are now in preparation in this country.

"Multiple-Currency" Models

The early modeling emphasis was on first-order, constant-coefficient, linear differential equation systems using compartmental models and focusing on flow of a single currency, usually energy. This was a gross simplification of biological reality to fit a model structure that could be handled easily by classical analytical methods and techniques. This was a necessary learning step.

In the late 1960s, ecologists began developing simulation models that accounted for the flow of more than one currency (i.e., energy, nitrogen, phosphorus, water, heat, animal numbers, carbon biomass). These models generally were difference equation models, nonlinear rather than linear, and often included lag influences. Thus, it was possible to forecast with these models but not to backcast.

This raised a storm of argument among the "linearists" vs the "nonlinearists," with the two camps respectively championed by Patten and Bledsoe.

At this time, Bob O'Neill wrote a very thoughtful paper discussing error analysis of ecological models (O'Neill 1971). One of the consequences of going from a linear, simplified system to a complex, nonlinear system relates to the increase in numbers of parameters which must be estimated and to the change in structure of the model.

The Appearance and Role of Optimization Models

Most of the discussion to this point has been concerned with the development of simulation models of ecological systems. But now systems ecologists frequently utilize optimization models,

particularly in applied ecology in the areas of renewable resource management. In the middle 1960s, when I was working at Oak Ridge, I began utilizing linear and nonlinear programming techniques in ecological analysis. This work was first published in 1966, applying and integrating multiple regression and linear programming models in renewable resource analysis (Van Dyne 1966). Subsequently, with Bernie Patten and Kevern and Wilhm, we used nonlinear programming, studying energetics of phytoplankton or of productivity of periphyton (Patten and Van Dyne 1968, Kevern et al. 1966).

Entry of Engineers into Systems Ecology

Some individuals with formal advanced training in electrical, industrial, or aerospace engineering entered the systems ecology field in the late 1960s.

G. L. (Gordie) Swartzman started working on terrestrial ecological problems in 1969 after receiving his Ph.D. in engineering at the University of Michigan. Gordie first worked on grassland modeling but then forests and now aquatic systems. Mitch Timin, with his background in aeronautical and aerospace engineering, joined the systems ecology group at San Diego State. He modelled tundra systems.

Simulation - Optimization

Most systems ecology simulation models cannot be subjected readily to sensitivity analyses for various reasons. One ends up playing a limited number of "what if" games with the simulation model. In particular, in renewable natural resource management (a set of fields that increasingly are utilizing systems ecological techniques), the manager must be concerned simultaneously with many variables. Thus, in the fields of forestry, of range and watershed management, and of fishery, wildlife, and marine biology, common ecological principles are applied and the basic unit of management in each is the ecosystem. The first paper I am aware of that combines simulation and optimization models on-line in an ecological analysis was published in 1972. Gordie Swartzman and I combined simulation and optimization models on-line (Swartzman and Van Dyne 1972). This is of considerable value in bridging the gap between utilizing the information from basic ecological research (from which many of the flow functions must be built for the simulation model segment) and the pragmatic problems of the field resource planner (as in the optimization segment).

Simulation and optimization combined in this manner do not guarantee a global optimum, but the approach does allow complex simulation and complex optimization models to be run on-line concurrently to provide good estimates of management strategies under a variety of simulation conditions.

Systems Models for Synthesis and Comparison

Another first is the publication of Reichle et al. (1973) which made an international comparison of a large number of data sets from different forest systems, using linear models. The International Biological Program (IBP) workshop in 1972 which contributed to this publication had considerable impact among forest ecologists. For people of many countries, particularly in Western Europe, it was a mind-expanding activity that they still talk about. Several of the synthesis volumes from the IBP include simulation models of ecological processes or of entire man-manipulated or natural systems [(e.g., see Grasslands, Systems Analysis and Man, Breymeyer and Van Dyne 1980)]. These illustrate the usefulness of models as syntheses.

Groups as Authors in Systems Ecology

Relatively early in the IBP program, the desert biome modeling group attempted to author some internal reports as a group. But they only used this approach for a year or so.

In 1974, I first saw a publication authored by a group, the Oak Ridge Systems Ecology Group (1974), which emphasizes the team authorship opportunity and problem in systems ecology studies. This problem has arisen in other situations, but few individuals, particularly group leaders, have had the fortitude to carry through publication by such a method!

Cross-Biome Comparisons with Models

Also, 1974 marked the publication by Cooper et al. (1974) of cross-biome model experiment results on a given problem, in this case, weather modification impacts of a hypothetical fleet of supersonic transports operating over the United States.

Frequency Analysis of Ecological Models

Though Kerlin and Lucius (1966) introduced at ORNL a software package which would perform frequency and sensitivity analysis, it was not until ten years later that Shugart and others applied this approach to an ecological system. It is difficult for most of us to think in the frequency domain and it will be interesting to see if this technique "catches on" in ecology.

Large, Complicated, Total-System Model Publication

One of the problems in systems ecology has been publishing large-scale models. Now, books are produced on such efforts. Thus Innis (1978) published a book which described a large-scale, multiple-flow, nonlinear difference equation simulation model which was field validated and experimentally tested. I will return to the publication problem a bit later.

ORNL SYSTEMS ECOLOGIST AND PUBLICATIONS

I have made an analysis of the publications in systems ecology by present and past ORNL staff. I drew my information largely from the "Bibliography of Mathematical Models in Ecology" of Kadlec et al. (1971) and the bibliography of ONeill et al. (1977), as well as from a large number of reprints and manuscripts submitted from ORNL. The purpose of doing this was to try to quantitatively trace the rate of development of publication output in systems ecology from the ORNL people and the nature of those outputs.

The ORNL Systems Ecologists

Here is a summary of some of the personnel who published in systems ecology at ORNL (Fig. 1). Their names appear at the year of their first publication in this field. I apologize here for those names I have omitted, but, in my quick reviewing of publications, I derived a time chart of this nature. Of course, not each individual still is at ORNL, although "Father" Olson is! More than 30 individuals are involved. The big influx of people was in 1969 or 1970 and related to the Eastern Deciduous Forest Biome study as part of the IBP.

ORNL Systems Ecology Publications

With respect to kinds of outputs, I summarize separately those in ORNL publications, scientific journals, and book chapters and proceedings volumes (Fig. 2). I have identified about 130 publications from the interval 1962 through 1978 containing models or model concepts by the ORNL group. This number, for example, compares to 621 papers abstracted by Kadlec (1971) and 946 by ONeill et al. (1977). Of course, the ONeill report included many papers included by Kadlec. I have not included here many Eastern Deciduous Forest Biome reports from non-ORNL workers (such as the modeling groups in Madison, Wisconsin; Troy, New York; or Durham, North Carolina) who participated in the program.

Roughly an equal number were published in ORNL publications and in scientific journal articles (Table 2). The ORNL publications included technical memoranda, general ORNL reports, IBP reports, and EDFB memo reports. About 75% of the ORNL publications on systems ecology came from the IBP study.

Of the scientific journals containing modeling articles from system ecologists at ORNL, generally there were only one or two per journal over this 17-year interval. However, some 10 such articles have been encountered in Ecology, the main publication outlet of the Ecological Society of America. Some 25 separate scientific journals were identified containing modeling articles from ORNL systems ecologists; 10 of these were foreign or international journals.

ORNL-DWG 80-7426 ESD

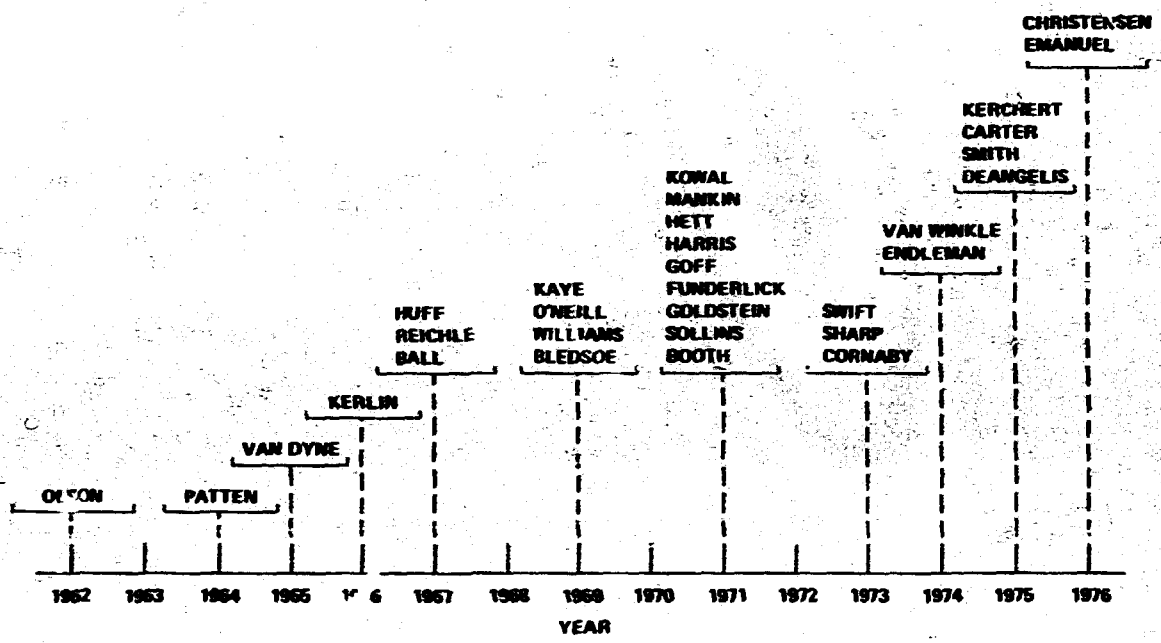

Figure 1. Some approximate dates of first modeling publications by ORNL systems ecologists for the 1962-1977 period.

Table 2. Modeling publications from ORNL systems ecologists, 1962 to 1978

Category	Percentage
ORNL publications	36
Journal publications	35
Book chapters and proceedings papers	29

About 25 books and proceedings volumes contain papers from ORNL systems ecologists. Generally, there was only one paper per volume with two exceptions. Bernie Patten's edited series on "Systems Analysis Simulation and Ecology," first published by Academic Press in 1971, has contained at least eight articles from ORNL systems ecologists. The "Summer Computer Simulation Conference Proceedings" has contained at least five such articles.

The first ORNL publication on systems ecology was by Neel and Olson (1962)(Fig. 2). This was a thorough presentation of techniques for implementing linear ecosystem models on an analog computer. (I might note that it was some of the intriguing discussions with Jerry Olson early in 1963 at the University of California that prompted me to come to ORNL to work.) Garfinkel had published on digital computer simulations of ecological systems in a note in Nature in 1962 (Garfinkle 1962) and Tom Odum with Pinkerton first advanced his concepts for an electrical analog circuit in 1955 (Odum and Pinkerton 1955). But it was not until 1966 and 1967 that Tom had published papers showing solutions to problems he had conceptualized and formulated. By this time Jerry had five or six articles published in ORNL reports, scientific journals, and elsewhere. This, in addition to the

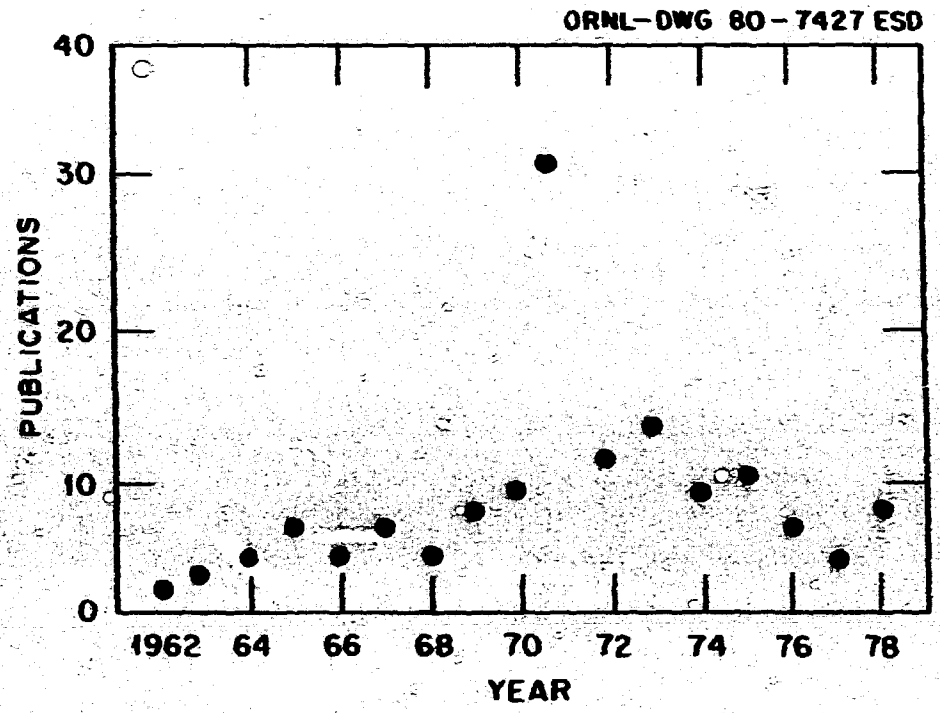

Figure 2. Approximate number of models published per year by ORNL systems ecologists from 1962 to 1978.

sinkhole field experiments, is why we can readily call Jerry the "father of systems ecology" in the general sense that we now understand systems ecology.

With the exception of the 1971 situation (to be discussed later), publication output from ORNL systems ecologists had a linear increase through 1973 (Fig. 3). The year 1971 reflected a very large number of Eastern Deciduous Forest Biome IBP publications, of which about two-thirds were memo reports.

Does the situation since 1973 indicate a decrease in ORNL systems ecology efforts and publications? Perhaps, but it may reflect a transfer of effort to some books and synthesis volumes which have not yet appeared in print. And it may reflect numerous papers I did not detect in my search.

A GEOGRAPHY OF SYSTEMS ECOLOGY

If one looks at the distribution of systems ecology centers around North America or the world, you recognize several influences: (i) the impact of ORNL as an institution, (ii) the International Biological Programs as a massive scientific effort, (iii) the concern with movement of radioisotopes through ecological systems as a problem area, (iv) a few outstanding individuals, such as Ken Watt and Tom Odum, to name only two, and (v) renewable resource management as driving forces.

Viewed in another manner, the driving forces for the development of systems ecology centers have been large contracts originally from the AEC and subsequently from ERDA and DOE, large grants from NSF during the IBP and subsequent programs, and a few long-term governmental inputs in resource management along with a sprinkling of efforts funded through NSF-RANN programs.

North America

With respect to development of ecological system models, the large impact of AEC, ERDA, and DOE has been on the national laboratories (Fig. 3). These funding organizations have not had much

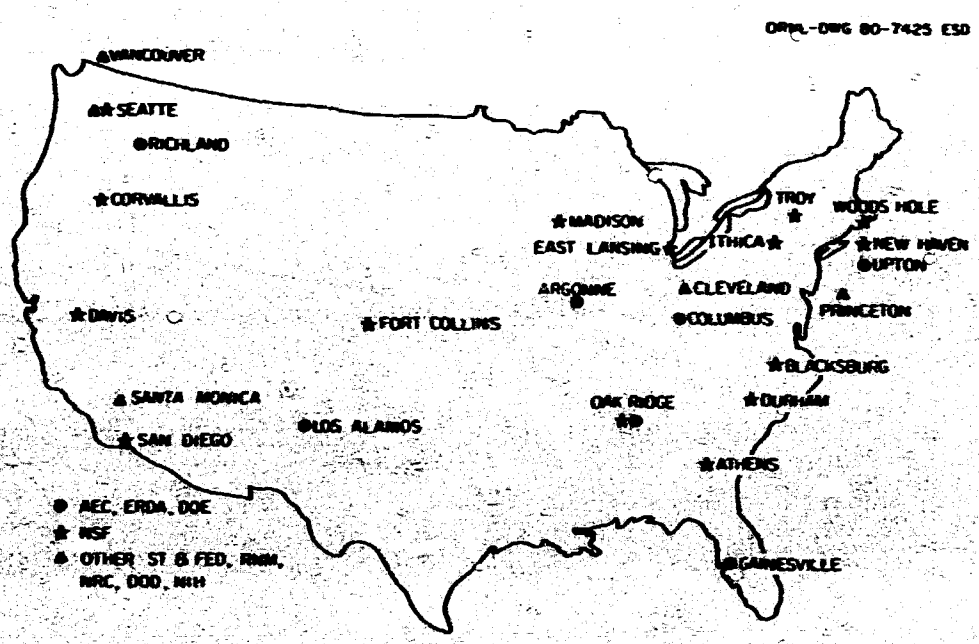

Figure 3. Geographic distribution of systems ecology centers in the conterminous United States, with major funding sources noted.

influence on university systems ecology. The efforts produced at Oak Ridge in this area are greater than the sum of the efforts at Los Alamos, Richland, Argonne, Livermore, and Upton.

The National Science Foundation, through its Ecosystem Analysis Office, but also through the RANN program of past years, has had more disperse inputs into the outputs of systems ecology as noted on this map. But major concentration of NSF-funded systems ecology efforts has been in Oak Ridge, Fort Collins, Logan, and Seattle, roughly in that order.

Inputs into system ecology outputs from the state and federal renewable resource management agencies have been particularly strong in Vancouver and Seattle.

Other Continents

On a global basis, there are not many examples of systems ecology centers outside of North America and Western Europe. In South America I know of only two places where systems ecology work has arisen -- Caracas, Venezuela, and Barilocni, Argentina. There are no centers of this type of work to my knowledge in Africa except for recent efforts in South Africa. There has been some scattered work in the Indian subcontinent in systems ecological modeling, primarily arising originally at Varanasi and subsequently at Nianital. There has been a strong effort over the past eight years in Israel, largely centered in Jerusalem.

The Australians have been particularly strong in the applied resource management and agricultural areas, with groups starting in Canberra and spreading eventually to Armidale and Perth. I must mention D. W. (David) Goodall who is perhaps the "world globetrotter" of the systems ecologists. David started his work in England then went to Australia, then to the United States, then back to Australia, and now I believe is in Sweden. He has left a trail of models behind him and, in the grazingland scene, has published on more versions of a spatial model than any other individual [e.g. see Goodall (1967) as the initial version, and Goodall (1972) for a more recent version].

In the Soviet Union there are efforts primarily in Novosibirsk and probably in many other areas of which I am not aware. Western Europe has a concentration of efforts in Great Britain. In the Netherlands, at Wageningen, Case De Wit has been an outstanding leader. There are also important systems ecology efforts at several other locations in Europe and Scandinavia, as noted.

PROBLEMS AND POSSIBILITIES

Systems ecologists today deal with total systems. This, however, was not always the case. Richard Levins in 1966 was discussing the models of single populations or species, and reflected on the difficulties that would be encountered if multiple-species systems were to be modeled (Levins 1975). He indicated that it would require setting up a mathematical model which is a faithful one-to-one reflection of this complexity. He indicated this would require using "perhaps 100 simultaneous partial differential equations with time lags," measuring hundred of parameters, solving the equations to get numerical predictions, and then measuring these predictions against nature. He further went on to discuss that there were too many parameters to measure, "the equations are insolvable analytically and exceed the capacity of even good computers."

Fortunately, there were many in the 1960s who were not dismayed at analyzing whole systems. For example, Spedding (1977) in England indicated we should not be dismayed by attempted work on total systems. He stated "the apparent arrogance of dealing with whole grassland systems largely disappears if it is realized that a cell, a cow, a grassland system, or a national industry are all systems with as many components and as much complexity as the investigator cares to recognize."

Within ten years of the time of Levins publication in 1966 questioning whether systems models would ever be built, models were built of and run for ecological, agricultural, and natural resource systems having 100 simultaneous equations (albeit not partial differential equations); models having time lags, nonlinearities, and thresholds; and models having hundreds of parameters.

This has, however, raised problems on how to evolve efficiently and rapidly a large-scale, multifaceted model, particularly in an interdisciplinary environment.

Evolution of Models

A good example of evolving a model was done by David Goodall. This model concerned grazing management in semi-arid rangeland (Goodall 1967). Originally the model was structured with a single herbivore, but subsequently with populations of different species of herbivores. The model incorporated spatial aspects by a structure which enables simulating a paddock with water supplies placed at different points and with different topographic features, such as slopes and flats. By varying the numbers and kinds of animal species, by varying the numbers and placement of water points, and by controlling competing undesirable herbivores, information can be gained from the model which would be a valuable aid in making a cost-benefit judgment on the potential value of the manipulation practice.

This model was first published in 1967 in India and subsequent versions of it were published in 1969, twice in 1970, and in 1971. There may be even more recent versions published that I have not encountered. It is of special interest here, however, because it is spatial and because of its evolutionary nature.

Another example of evolution of a model is the case of an ecosystem-level model of grasslands called ELM, which has gone through several versions. ELM was first documented for a 1973 version (Innis 1978). A 1974 version was developed but only partially documented. A 1977 version was fully documented and thoroughly experimented with (Van Dyne et al. 1977). A 1978 version now is operable and being tested. I am not proposing that the ELM structure or approach is necessarily a good one, but simply what was considered an impossibility in the middle 1960s was a demonstrated reality within a dozen years.

The high costs of models are becoming increasingly well known. This has lead to new modeling efforts in attempting to develop generalized models which can be adapted by parameter changes to a variety of situations. This has introduced the concept of development of "canonical" submodels for plants, consumers, and so forth. The approach has yet to be fully tested.

This approach was the basis of a research study by G. S. (George) Innis, formerly at Colorado State University, at the Utah State University, beginning in about 1974 and continuing until the last year or so. George was attempting to develop a self-organizing software system which would take theory, objectives, and a library of submodels and help organize an initial model from these. As far as I know, he has not succeeded in developing this system to a publication stage. Such an output is, however, greatly needed.

Clients for Systems Ecology Models

Many ecological systems models designed to answer questions concerning real-world problems now require several professional person-years of input. Clients must be found to support these efforts. A problem arises here.

Let me attempt an analogy now between systems ecology modeling and global modeling as derived from an IIASA newsletter. Global modeling started out as client-directed (under a strong client) and shifted to become academic and client-independent. The Club of Rome started by funding World 1, World 2, and World 3. The last version was eventually published as a popular volume "The Limits to Growth" before the technical documentation was completed. This helped it lose favor in the scientific community. Subsequently, the World Integrated Model of Mesarovic and Pestel was developed as were several other world models including the UN World Model, Fuji, Sarum, and the Latin American World Model. The principle which developed in these efforts was:

"Models have to be almost custom-designed to establish client rapport; modeler-conceived multi-client models are prone to failure."

Clientless modeling represents pure science and suffers from high competition and tight funding. Also, some of the scientific establishment appears to question whether modeling is a science.

Furthermore, particularly in large-scale, multifaceted systems ecology modeling, it has been the experience that model documentation is difficult and expensive to prepare, voluminous, and boring. Publishers are hard to find; audiences are sparse.

In the academic atmosphere with its selection pressures favoring the esoteric, the refined, the theoretically pure, and the specialized, there is not a particularly healthy environment for multidisciplinary modeling.

Now, with funding scarce and audiences growing deaf, systems modelers are apt to make a case for their own work by overselling it and depreciating the work of others, only to be followed by others who denounce their work in turn. The logical consequence is that enthusiasm for large-scale, total-system, academically oriented ecological modeling efforts seems to have dried up.

The early years of systems ecology modeling were characterized by exuberance, unrealistic expectations, and inexperienced management. Cost and time requirements were grossly underestimated with the consequence that model construction greatly overshadowed model testing, documentation, and refinement.

When modeling efforts start, limited ecosystems models tend to expand to account for more and more variables, currencies, and detail and processes. But it takes money to hold together modeling teams made up of different disciplinary backgrounds. Or it takes long-term funding for an individual or small group and dedication on their part to "stick with it." The source of funds for large-scale, basic ecosystem modeling has, to a large degree, dried up.

On the other hand, sources of funds for modeling applied problems have not yet been forthcoming in the magnitude and for the duration to get the job done. But the clients are getting more sophisticated, and more and more people with training and understanding of the advantages and limitations of these approaches are moving up through the ranks in the funding agencies. Each year, however, more and more scientists trained in systems ecology gain senority. Each year more people enter this field from related disciplines of engineering, mathematics, computer science, and economics.

So, after an intensive period of activity in systems ecological modeling, beginning in the middle 1960s and running through the middle 1970s, I think we are now in a "lull of synthesis, contemplation, and evaluation" of the decade's work. I believe within a few years there will be greatly increased efforts in this area. I hope they will be more efficient perhaps in the decade of the 1980s than they were in the initial decade of systems ecology. With greater efficiency, the clients should be happier.

I have detected in the writings of some individuals from the ORNL Environmental Sciences Division, particularly from the management level, a "defensiveness" regarding working in an applied science laboratory. There seems to be a strong concern as to how "academics" might view these individuals. Yet perhaps more progress in ecological science has been achieved by individuals working in applied rather than in basic areas. The inputs into the area of systems ecology from those in the national laboratories are outstanding.

One of the real problems for scientists in ecology in the last ten years has been in attempting to work on impact statements. Here the ecologist, academically trained and oriented, is forced to become involved in problems of real-life complexity. To some degree the applied ecologists in agriculture and resource management have been "suffering from this problem" for several decades. The ecologist in the liberal arts and natural science departments only entered this realm in the last 10 to 20 years. The problem in the impact statement analysis is that not only are the physical and biological dimensions of the problem of concern but also the social, political, and economic dimensions constrain and challenge what is done.

Dynamic Optimization

Renewable resource managers are important users of models and techniques developed in systems ecology. Renewable resource management is a problem of dynamic optimization.

Dynamic optimization analyses can be accomplished through dynamic programming, calculus or variations, control theory approaches, and other heuristic approaches such as the simulation-optimization method described already. Dynamic programming has been attempted for simple systems, but never has been accomplished for a real-life ecological system to much complexity to my knowledge. The same applies to calculus of variation techniques.

B. K. (Ken) Williams has recently finished a dissertation at Colorado State University involving a control theory approach for grazing analysis (Williams 1979). Here a difference equation simulation model is utilized, under a variety of runs, to develop a response surface to show how plant production and grazing output vary as a function of initial conditions, driving variables, and management strategy which controls the season and amount of grazing harvest of the plants in the community. A Markov decision process, including discounting the present worth of the future value of grazing at different time steps, is used in the control approach. The model is a finite state, finite action, infinite discrete-time horizon model. By starting either with an initial policy or with an initial value, the model interacts to find a final policy and value.

We need many other methods developed in this area.

Stochasticity

There is a pervasive problem of stochastic factors in ecological modeling.

We recognize that considerable uncertainty may exist in information about the driving variables in an ecological simulation model. These are predominately climatic variables. We have developed methods and techniques to account for probalistic climate. However, an ecosystem model contains many parameters in the flow-function expressions. Each parameter is not known with certainty, but instead may be estimated as a mean value with some variance. We know little about the distributional properties of these parameters or of the variance-covariance matrix for them.

Assume that we have knowledge of the means, variances, and covariances for (1) the parameters in flow functions, (2) the initial conditions, and (3) the driving variables. Then, what would be the statistical properties of the output from the simulation model? I do not know.

Stochastic or probablistic models have not been explored fully nor developed in systems ecology.

Hierarchies of Models

In the late 1960s, Ben Clymer put forth a number of ideas about hierarchical levels for ecosystem models (Clymer 1969a, 1969b; Clymer and Biedsoe 1970). Subsequently Dave Goodall and others in the second or third round of modeling efforts in the IBP Desert Biome Studies started to develop a hierarchical multiflow-total system model or desert systems. Even later, George Innis started a project on self-organizing modeling approaches.

None of these areas were carried to completion and application throughout the scientific community. All of these efforts essentially were directed towards a common objective. The objective was to develop procedures and software to facilitate the development of ecological system models. This has not yet been attained and I would like to contribute some ideas on approaches and needs, hopefully to encourage someone to undertake such an effort.

There is a strong need for the development of detailed conceptual diagrams of how ecological systems operate. Essentially, what is needed are wall-sized charts specifying in detail the structure and functional relationships in given ecosystems. Perhaps it would require focusing on limited sets of systems such as grazingland systems or deciduous forest systems.

Such diagrams would follow something like the Forrester flow diagram approach (Forrester 1961), in which driving variables, state variables, and flows are identified. Accompanying the large box-and-arrow type of diagram would be a large flow-effects matrix (some may call it a flow-affects matrix). The rows in this matrix would be the flows in the large diagram or chart. The columns in the matrix would be the factors affecting the flows and would include time and the driving variables and state variables in the large chart. The entries in the cells of the flow-effects matrix would simply indicate whether that particular driving or state variable has a major influence on the flow in question.

Developing such a detailed conceptual diagram is no small task. The logical enumeration of the kinds and amounts of biotic and abiotic components within an ecosystem would take considerable skill and knowledge. Perhaps the subdivision into state variables would be according to functional groups rather than individual species. The functional groups should be defined in such a way, however, as to be inclusive.

The large-scale diagram is of value in itself, but its main value is its use as a basis of developing a hierarchical set of successively more aggregated diagrams of the system.

To explain this approach, assume that we can draw a low-resolution model diagram (Fig. 4) for water flow in an ecological system. Here we can identify three main compartments (atmosphere, surface, and subsurface) and four major kinds of flows (precipitation, infiltration, evaporation, and uptake).

ORNL-DWG 80-7424 ESD

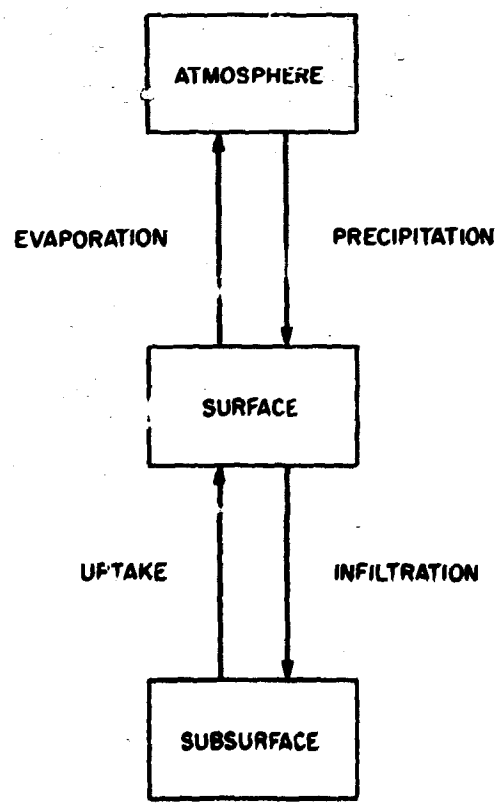

Figure 4. A diagram of a simplified water flow model (after Hinds and Van Dyne 1980).

At a higher degree of resolution we can subdivide or disaggregate these three compartments into many more (Fig. 5). Thus, we account now for water in the atmosphere in the solid, liquid, and gaseous state. We account now for subsurface water in components or compartments of that in the soil in the root zone, in soil below the root zone, and in the groundwater as well as that in the plant roots themselves.

Essentially, then, throughout the large wall-size detailed chart I spoke of, we can make overlays which aggregate compartments and flows. We can collapse the detail of the large chart in many ways.

When we disaggregate the compartments we disaggregate the flows (Table 3). In the low resolution model, we had a flow called precipitation. In the higher resolution model this is disaggregated into twelve different kinds of precipitation flows. In the low resolution model we had an atmosphere compartment and thus no within-atmosphere flows. In the higher resolution model this requires specifying sublimation, melt, freeze, evaporation, and condensation flows. Thus we can see that the flows can be hierarchically arranged in correspondence with the hierarchical arrangement of compartments. Further examples of collapsing or expanding flows are shown in Fig. 6.

Now, consider that we may make multiple hierarchical levels for different compartments. Consider here the compartment labeled as surface in the low resolution model, which corresponds to level one in this diagram. Level three in this diagram roughly corresponds to the higher resolution model.

There can be many levels of resolution defined within the abiotic, autotrophic, and heterotrophic subsystems of the overall ecological systems. Associated with any given level of resolution, there would be a specific flow diagram and a flow-effects matrix. Now, let's return to the flow-effects matrix.

ORNL-DWG 80-7429 ESD

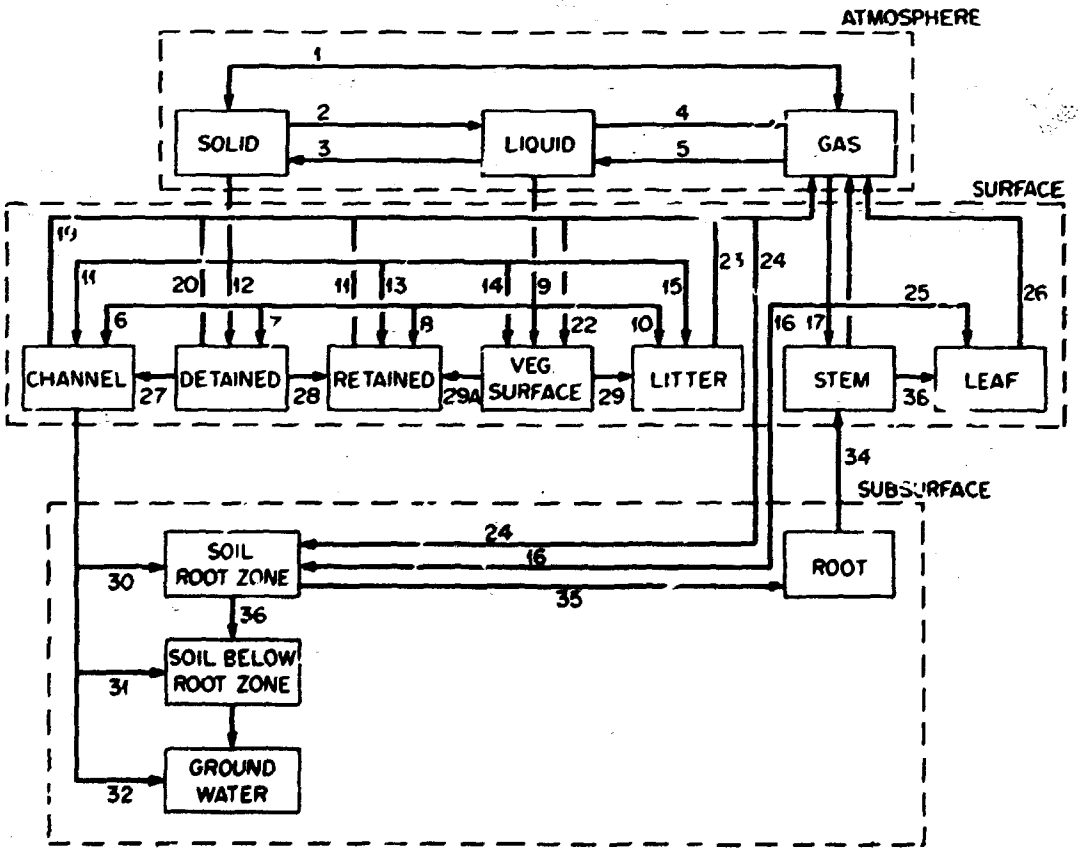

Figure 5. A diagram for a more complex water flow model (compare to Fig. 4).

A given flow can be calculated in a mechanistic manner or in an empirical manner. The degree of resolution required in the calculation depends upon the objectives of the model and the importance of that particular flow function. Thus, for example, we could calculate the decomposition flow simply as a function of temperature and moisture. At a higher level of resolution, we could include the impact of nutrient concentrations.

Table 3. A hierarchy of water flows in grassland ecosystems

General flow	Figure number	Specific flow
	1	Sublimation
	2	Melt
Within-atmosphere	3	Freeze
	4	Evaporation (virga)
	5	Condensation
	6	Liquid precipitation to channel
	7	Liquid precipitation to detention
	8	Liquid precipitation to retention
	9	Liquid precipitation to interception
	10	Liquid precipitation to litter
Precipitation	11	Solid precipitation to channel
	12	Solid precipitation to detention
	13	Solid precipitation to retention
	14	Solid precipitation to interception
	15	Solid precipitation to litter
	16	Gaseous water to stems
	17	Gaseous water to leaves
	18	Evaporation from channel
	19	Evaporation from detention
Evaporation	20	Evaporation from retention
	21	Evaporation from interception
	22	Evaporation from litter
	23	Gaseous loss from stems
	24	Gaseous loss from leaves
At surface	25	Overland flow, detained to channel
	26	Overland flow, detained to retained
	27	Stemflow to litter
	28	Stemflow to retained
	29	Conduction, stems to leaves
	30	Interflow, channel to soil root zone
Infiltration	31	Interflow, channel to below-root zone
	32	Interflow, channel to groundwater
	33	Infiltration
Unsaturated flow	34	Conduction, roots to stems
	35	Uptake by plant roots
Within subsurface	36	Percolation to below-root zone
	37	Percolation to groundwater
Atmosphere-subsurface	38	Vapor diffusion, atmosphere to soil
	39	Vapor diffusion, soil to atmosphere

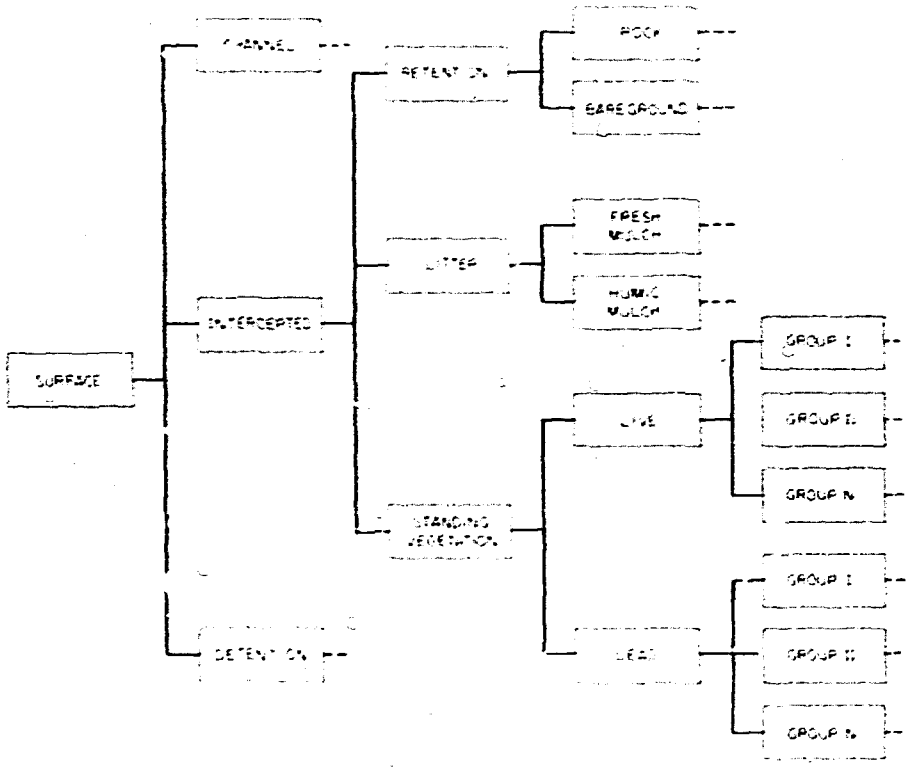

Figure 6. An example of the concept of hierarchical levels of compartments for the surface component of water flow models.

Our working components include a hierarchy of flow diagrams, a hierarchy of flow-affects matrices, and families of flow function expressions (Table 4). Now I want to invoke the rule of "Occam's Razor." Basically, our best model will be the simplest model for the particular objectives at hand. If our interest is field mice within the overall system model, we might want to represent that population in some detail, but other components of the system might be aggregated. Also, the degree to which we could aggregate the "nonessential parts" of the system would depend upon the level of resolution we wanted to use in calculating the flows in the essential part of the system. At any given level of resolution of flow calculation, there will be a specific set of driving variables and state variables needed to make the calculations. Including these driving and state variables will result in yet more state variables and driving variables needed to account for the dynamics of that particular state variable (Fig. 7).

I propose that a software system be developed which utilizes "Occam's Razor" in carving out the simplest model to accomplish the effort of interest from the overall hierarchy of flow models and hierarchy of flow-effects matrices and families of flow-function expressions. This process would produce a simplified diagrammatic model, flow-effects matrix, and functional code for the ecosystem of concern.

A further task in the overall effort would be identifying ways in which different driving variables and state variables could be combined in calculating flow expressions. Perhaps the entry point here would be to make a comparative study of the way different flow processes are described in extant models. Within each model, the parameters should be identified. This would, in part, be a "cataloging effort," but it would probably yield more value to the scientific community than an independent, new-model development.

In this effort, alternative functional forms could be examined in analysis experiments to test out the response (i.e., flow rate variation) according to variations in the controlling variables. This would help identify the limits of operation of the various function expressions. If this could be done

Table 4. Some components of an ecosystem modeling approach

- Hierarchy of flow diagrams
- Hierarchy of flow-effects matrices
- Families of flow functions
- An "Occam razor" for structuring models

ORNL-DWG 80-7428 ESD

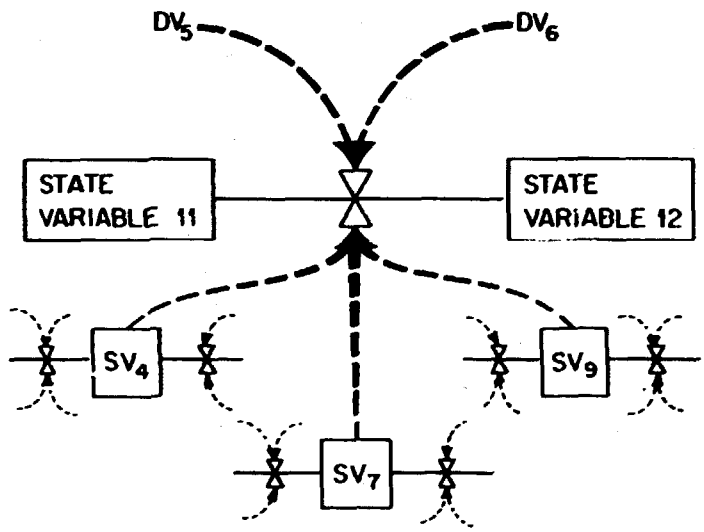

Figure 7. An illustration of how driving variables (here DV_5 and DV_6) and other state variables (here SV_4, SV_7, and SV_9) control a flow between two state variables (here 11 and 12). Note state variables 4, 7, and 9 each are changed by flows in and out.

in a uniform notation and coding scheme, the results could be utilized directly by modelers throughout the world.

Unfortunately, many scientists hesitate to undertake such painstaking and extensive work. Many funding organizations are inclined to approach modeling, if not with skepticism, with a "let's hurry-on-with-the-job philosophy" and promote the development of a "new" piece of scientific work. The temperament and psychology of the researcher is also of concern. Perhaps the researchers feel the rewards come in writing scientific papers of limited scope on new results and then moving on to something else, rather than undertaking the large, long-term, arduous type of task discussed above?

But, perhaps an approach of the type I have illustrated would have considerable payoff for a team of systems ecologists?

A Religion for Systems Ecologists

In closing, I would like to paraphase from Fred Bunnell (1972) on a religion for systems ecology (Table 5).

The true believers who have listened thus far will recognize that many elements of the systems ecologist's doctrine have been interspersed throughout this talk. However, the faith has not been fully accepted! It has been questioned occasionally!

Table 5. Rules-of-thumb for systems ecologists

* Yours is the right path
* Depend on generalizations
* Incorrect results are most valuable
* Simple is good
* Rely on order-of-magnitude comparisons
* Depend on general pattern of response

Systems ecologists are devout, their faith is unwavering; almost certainly, they are more devout than sane ecologists. They are imbued and driven by the faith that even though the approach may not have worked yet, it remains one of the few paths to truth and light!

They hold perhaps more faith than other ecologists in absolutes, ubiquitous patterns, universal principles, or natural laws. Many systems ecologists seek these grails in only an abstract and generalized sense. Further, they have unshaking faith in their model-building ability to abstract such universals.

In seeming contradiction to his or her acceptance of generalized ecological principles, the systems ecologist does not believe that he or she cannot test these principles or conclusively prove their existence. The systems ecologist recognizes that his or her faith is pure and untainted by statistical exercise! They may state that "the model is of most use when it is purely wrong!"

Having imperturbable faith in general patterns, the systems ecologist is convinced that only a small portion of the elements and patterns within an ecological system are important. In face of Pascal's statement that "error comes from exclusion," the systems ecologist believes that "error comes from inclusion." He or she adopts a teleological view of nature to the extent of recognizing basic patterns, but remains convinced that there is a lot of "garbage" lying around with no real purpose -- noise in the jargon of the communications engineer--and containing little information.

An outcome of these combined feelings is that the systems ecologist assumes pattern through time and relative magnitude to be more important than absolute magnitude.

Perhaps the single factor which is most weak in the religion of the systems ecologist is that they have no Bible. There is no single detailed comprehensive integrated treatment of the principles and practices of systems ecology. We need a systems ecologist to write one; this person needs the language abilities and literary interests and scholarly approaches of a Jack Major, an Evelyn Hutchinson, and a Richard Bellman all rolled into one!

Perhaps he or she is in the audience here at ORNL?

REFERENCES

Bledsoe, L. J.
1970. ODE, numerical analysis for ordinary differential equations. U.S. IBP Grassland Biome Study Tech. Rep. 46, Colorado State University, Fort Collins, 42 pp.

Bledsoe, L. J., and J. S. Olson
1970. COMSYSI - A stepwise compartmental simulation program. ORNL-2413. Oak Ridge National Laboratory, Oak Ridge, Tennessee.

Bledsoe, L. J., and G. M. Van Dyne
1969. Evaluation of a digital computer method for analysis of compartmental models of ecological systems. ORNL/TM-2414. Oak Ridge National Laboratory, Oak Ridge, Tennessee. 64 pp.

Breymeyer, A. I., and G. M. Van Dyne (eds.)
1980. Grasslands, Systems Analysis and Man. Cambridge University Press, Cambridge, England. 950 pp.

Brockington, N. R.
1979. Computer Modelling in Agriculture. Oxford University Press, England. 168 pp.

Bunnel, F.
1972. Theological ecology. Faculty of Forestry, University of British Columbia, Vancouver. 4 pp. (mimeo).

Clymer, A. B.
1969a. Modelling and simulation with big systems. Proc., Simulation Modeling Conference, Pittsburgh, Pennsylvania.

Clymer, A. B.
1969b. The modelling of hierarchical systems. Keynote Address, Conference on Applications of Continuous System Simulation Languages, San Francisco, California.

Clymer, A. B., and L. J. Bledsoe
1970. A guide to the mathematical modelling of an ecosystem. pp. 175-199. IN R. G. Wright and G. M. Van Dyne (eds.), Simulation and Analysis of Dynamics of a Semi-Desert Grassland. Range Sci. Ser. No. 6, Range Science Department, Colorado State University, Fort Collins. 297 pp.

Cooper, C. F., T. J. Blasing, H. C. Fritts, Oak Ridge Systems Ecology Group, F. M. Smith, W. J. Parton, G. F. Schreuder, P. Sollins, J. Zich, and W. A. Stoner
1974. Simulation models of the effects of climatic change on natural ecosystems. pp. 550-562. IN Proc., Third Conference on the Climatic Impact Assessment Program. U.S. Dept. of Transportation, Cambridge, Massachusetts.

Crawford, N. H., and R. K. Linsley
1966. Digital simulation in hydrology: Stanford Watershed Model IV. Stanford University, Department of Civil Engineering Technical Rpt. 39. 210 pp.

de Wit, C. T., and J. Goudriaan
1974. Simulation of Ecological Processes. Center for Agricultural Publishing and Documentation, Wageningen, The Netherlands. 159 pp.

Forrester, J. W.
1961. Industrial Dynamics. MIT Press and John Wiley and Sons. 464 pp.

Garfinkel, D.
1962. Digital computer simulation of ecological systems. Nature 194:856-857.

Goodall, D. W.
1967. Computer simulation of changes in vegetation subject to grazing. J. India Bot. Soc. 46:356-362.

Goodall, D. W.
1972. Potential applications of biome modelling. Tierre et la Vie 1:118-132.

Holling, C. S.
1965. Functional response of predators to prey density and its role in mimicry and population regulation. Mem. Entomol. Soc. Canada 45:3-60.

Innis, G. S. (ed.)
1978. Grassland Simulation Model. Ecol. Stud. No. 26. Springer-Verlag, New York. 298 pp.

Jeffers, J. N. R.
1978. An Introduction to Systems Analysis with Ecological Applications. Edward Arnold (Publishers) Ltd., London. 198 pp.

Jorgensen, S. E.
1979. State-of-the-Art in Ecological Modelling. Proc., Conference on Ecological Modelling, Copenhagen, 28 Aug.-8 Sept. 1978. International Society for Ecological Modelling, Copenhagen. 891 pp.

Kadlec, J. A. (ed.)
1971. A partial annotated bibliography of mathematical models in ecology. University of Michigan, School of Natural Resources, Ann Arbor, Michigan.

Kelly, J. M., P. A. Opstrup, J. S. Olson, S. I. Auerbach, and G. M. Van Dyne
1969. Models of seasonal primary productivity in eastern Tennessee Festuca and Andropogon ecosystems. ORNL-4310. Oak Ridge National Laboratory, Oak Ridge, Tennessee. 305 pp.

Kerlin, T. W., and J. L. Lucius
1966. The SFR-3 code: A FORTRAN program for calculating the frequency of response of a multivariate system and its sensitivity to parameter changes. ORNL/TM-1575. Oak Ridge National Laboratory, Oak Ridge, Tennessee.

Kevern, N. R., J. L. Wihn, and G. M. Van Dyne
1966. Use of artificial substrata to estimate the productivity of eriphyton. Limnol. Oceanog. 11:499-502.

Levins, S. H.
1975. The strategy of model building in population biology. Am. Sci. 53:421-431.

Lindeman, R. L.
1942. The trophic-dynamic aspect of ecology. Ecology 23:399-418.

Lotka, A. J.
1925. Elements of Physical Biology. Williams and Wilkins Co., Baltimore. 460 pp. (Also published by Dover Publ., Inc., New York, 1956.)

Lucas, H. L.
1960. Theory and mathematics in grassland problems. Proc., Inter. Grassland Congr. 8:732-736.

Lucas, H. L.
1964. Stochastic elements in biological models: Their sources and significance. pp 355-383. IN J. Garland (ed.), Stochastics in Medicine and Biology. University of Wisconsin, Madison. 393 pp.

Neel, R. B., and J. S. Olson
1962. Use of analog computers for simulating the movement of isotopes in ecological systems. ORNL-3172. Oak Ridge National Laboratory, Oak Ridge, Tennessee. 111 pp.

Oak Ridge Systems Ecology Group
1974. Dynamic ecosystem models: Progress and challenges. pp. 280-296. IN S. A. Levin (ed.), Ecosystem Analysis and Prediction. SIAM Instit. Math. Soc., Philadelphia, Pennsylvania. 337 pp.

Odum, E. P.
1964. The new ecology. BioScience 14:14-16.

Odum, E. P.
1971. Fundamentals of Ecology. Third Edition. W. B. Saunders. Philadelphia, Pennsylvania. 574 pp.

Odum, H. T., and R. C. Pinkerton
1955. Time's speed regulator: The optimum efficiency for maximum output in physical and biological systems. Am. Sci. 43:331-343.

Olson, J. S.
1963a. Energy Storage and the balance of producers and decomposers in ecological systems. Ecology 44:322-332.

Olson, J. S.
1963b. Analog computer models for movement of isotopes through ecosystems. pp. 121-125. IN V. Schultz and A. W. Klements (eds.), Proc., First National Symposium on Radioecology, Colorado State University. Reinhold, New York, and American Institute for the Biological Sciences, Washington, D.C.

Olson, J. S.
1965. Equations for cesium transfer in a Liriodendron forest. Health Phys. 11:1385-1392.

O'Neill, R. V.
1971. Error analysis of ecological models. EDFB Memo Rep. 71-15. Oak Ridge National Laboratory, Oak Ridge, Tennessee. 31 pp.

O'Neill, R. V., N. Ferguson, and J. A. Watts
1977. A bibliography of mathematical modeling in ecology. EDFB/IBP-75/5. Oak Ridge National Laboratory, Oak Ridge, Tennessee. 78 pp.

Ott, W. R. (ed.)
1976. Proceedings of the Conference on Environmental Modelling and Simulation. Office of Research and Development, U.S. Environmental Protection Agency, Washington, D.C. 847 pp.

Patil, G. P., E. C. Pielou, and W. E. Waters (eds.)
1971. Statistical Ecology: Many-Species, Ecosystems, and Systems Analysis, Vol. 3. Pennsylvania State University Press, University Park.

Patten, B. C.
1959. An introduction to the cybernetics of the ecosystem: The trophic-dynamic aspect. Ecology 40:221-231.

Patten, B. C.
1969. Ecological systems analysis and fisheries science. Tran. Am. Fish. Soc. 98:570-581.

Patten, B. C. (ed.)
1971. Systems Analysis and Simulation in Ecology, Vol. 1. Academic Press, New York. 607 pp.

Patten, B. C. (ed.)
1972. Systems Analysis and Simulation in Ecology, Vol. 2. Academic Press, New York. 592 pp.

Patten, B. C. (ed.)
1975. Systems Analysis and Simulation in Ecology, Vol. 3. Academic Press, New York. 60[illegible]

Patten, B. C. (ed.). 1976. Systems Analysis and Simulation in Ecology, Vol. 4. Academic Press, New York. 593 pp.

Patten, B. C., and M. Witkamp
1967. Systems analysis of cesium-134 kinetics in terrestrial microcosms. Ecology 48:813-325.

Patten, B. C., and G. M. Van Dyne
1968. Factorial productivity experiments in a shallow estuary: Energetics of individual plankton species in mixed populations. Limnol. Oceanog. 131:309-314.

Pielou, E. C.
1969. An Introduction to Mathematical Ecology. Wiley-Interscience, New York. 286 pp.

Reichle, D. E., R. V. O'Neill, and J. S. Olson, (eds.)
1973. Modelling forest ecosystems. EDFB-IBP-73-7. Oak Ridge National Laboratory, Oak Ridge, Tennessee. 339 pp.

Shugart, H. H., Jr. (ed.)
1978. Time Series and Ecological Processes. SIAM Institute for Mathematics and Society, Philadelphia, Pennsylvania. 303 pp.

Shugart, H. H., D. E. Reichle, N. T. Edwards, and J. R. Kercher
1976. A model of calcium cycling in an east Tennessee Liriodendron forest: Model structure, parameters, and frequency response analysis. Ecology 57:99-109.

Smith, F. E.
1969. Effects of enrichment on mathematical models. pp. 631-645. IN G. A. Rolich (ed.), Entrophication, Causes, Consequences, and Corrections. Am. Assoc. Adv. Sci., Washington, D.C.

Smith, F. E.
1970. Analysis of ecosystems. pp. 7-18. IN D. E. Reichle (ed.), Analysis of Temperate Forest Ecosystems. Ecol. Stud. I. Springer-Verlag, New York. 304 pp.

Smith, R. L.
1974. Ecology and Field Biology, Second Edition. Harper and Row, Co., New York. 850 pp.

Spedding, C.R.W.
1970. The relative complexity of grassland systems. pp. A26-A31. IN Proc., XI International Grassland Congress. U. Qsld. Press, Queensland, Australia.

Swartzman, G. L., and G. M. Van Dyne
1972. An ecologically based simulation-optimization approach to natural resource planning. Ann. Rev. Ecol. Syst. 3:347-397.

Van Dyne, G. M.
1966. Ecosystems, systems ecology and systems ecologists. ORNL-TM-3957. Oak Ridge National Laboratory, Oak Ridge, Tennessee.

Van Dyne, G. M.
1966. Application and integration of multiple linear regression and linear programming in renewable resource analysis. J. Range Manage. 19:356-362.

Van Dyne, G. M.
1977. Content, evolution, and educational impacts of a systems ecology course sequence. pp. 9-23. IN G. S. Innis (ed.), New Directions in the Analysis of Ecological Systems. Simulation Council Proceedings Series, Society for Computer Simulation, La Jolla, California.

Van Dyne, G. M., and Z. Z. Abramsky
1975. Agricultural systems models and modelling: An overview. pp. 23-106. IN G. E. Dalton (ed.), Study of Agricultural Systems. Appl. Sci. Publ., Ltd., London. 441 pp.

Van Dyne, G. M., L. A. Joyce, B. K. Williams, and J. E. Kautz
1977. Data, hypotheses, simulation and optimization models, and a model experiment for shortgrass prairie grazinglands: A summary of recent research. Report to Council on Environmental Quality, Washington, D.C. 770 pp.

Walters, C. J.
1971. Systems ecology: The systems approach and mathematical models in ecology. Chapter 10, pp. 276-292. IN E. P. Odum (ed.), Fundamentals of Ecology, Third Edition. W. B. Saunders Co., Philadelphia. 574 pp.

Watt, K. E. F. (ed.)
1966. Systems Analysis in Ecology. Academic Press, New York. 276 pp.

Williams, B. K.
1979. Optimal stochastic control of salt desert shrubs by season and intensity of defoliation. Ph.D. dissertation. Colorado State University, Fort Collins, Colorado. 261 pp.

* * * * *

QUESTIONS AND ANSWERS

S. I. AUERBACH: Of course, George, you know the Bible was written by sort of being handed down by word of mouth and embellished as it went along through the centuries. Maybe that's what you all have to do. Any questions for George's provocative comments?

L. W. BARNTHOUSE: I was interested in your critical comments of the first page of Levins' 1966 paper, and I was wondering if you have noticed that the ideas that you presented toward the end about the need for simplicity and hierarchies in modeling were, in fact, very similar to what Levins wrote about in the remaining pages of that paper?

G. M. VAN DYNE: As I remember the paper, a lot of it was on generality, precision, and reality. He indicated these were contrasting properties and he couldn't obtain all of those at the same time. I think he's right. I think it was a very interesting and useful paper. The only point I wanted to make was that he indicated it couldn't be done. These large-scale models, which gave reasonable results, could not be dealt within the time frame.

W. F. HARRIS: I'm surprised, among the problems you listed for systems ecologists in the future, at the omission of techniques for validation. Do you think these techniques are at hand or is this the next generation of problems beyond just simply the models themselves.

G. M. VAN DYNE: I did not mention that exclusively in the talk, but I would incorporate that kind of activity in the error analysis activity. It does little good to make an error analysis if you simply change parameters and have nothing to compare the results against. That brings in the problem of validation, what you are going to check against. There are some efforts ongoing here at ORNL now that I did not know about in detail. Maybe we'll learn more about them today. That's why I did not include the validation problem.

ENVIRONS: RELATIVISTIC ELEMENTARY PARTICLES FOR ECOLOGY[1]

Bernard C. Patten
Department of Zoology and Institute of Ecology
University of Georgia
Athens, Georgia

S. I. AUERBACH: George mentioned a paper in 1959 by Patten as being one of the key papers. I remember that it caught my eye. At that time also, we were starting a series of radiation ecology institutes in Oak Ridge in association with the then Oak Ridge Institute of Nuclear Studies. Bernie came up to one of those institutes and we got to dialoguing. He was then at the Virginia Institute of Marine Sciences, an organization with which we recently have had some interaction. But seriously, in our discussions Bernie expressed what his ambition was, his professional ambition. He was widely concerned, he felt, about developing two things: truly working toward development of theory in ecology and truly developing the use of mathematics, not simply mathematics as a means of elegant curve-fitting but using that mathematics and mathematical thinking to move ahead in the theoretical development of ecology. He and George and Jerry joined us about the same time. At that time, our group was small, and it was a very intense and exciting period as those three individuals began to interact and develop their ideas. Bernie has pursued that single-minded effort toward developing theory, and he has become a widely known practitioner and leader in that field. I presume he is going to talk about that today. Thank you. Bernie.

* * * * *

Corpuscular theories have a favored place in science. They serve well at all levels of organization in advanced sciences such as physics, chemistry, and biology, and the power of a discipline may often be correlated with the extent to which particulate conceptions underlie it. Elementary particles, quanta, atoms, molecules, genes, cells, and organisms are all examples of such conceptions. Ecology lacks an elementary particle of its own, whose properties can be developed and whose interactions can produce meaningful ecological systems with interesting associated phenomena. In this paper my goal is to suggest such a particle, and indicate what is known about it together with currently seen directions for learning more.

Ecology, as the biological science of environment, really has not produced a synthesis of environment from its wide knowledge of environmental parameters and their influences on organisms. The interplay of environmental causes and organism reactions to these does not form an integrated theory. The organism is portrayed as distinct from environment, and organizational wholeness of the organism-environment complex is denied. A principal consequence is that the population, rather than the community or ecosystem, is the prime unit of ecological analysis.

An alternative to organism-environment dualism, which is what we have, is organism-environment synergy in which the two halves make a unitary whole. A group of "ecological psychologists" recently has provided important logical and philosophical foundations for such a unitary concept. These authors (Gibson 1961, 1966, 1979; Turvey and Shaw 1979; Turvey et al. 1978; Shaw et al., in press; Shaw and Turvey, in press) portray life and environment as coimplicative, having coevolved and been codesigned. They turn to Leibniz' principle of mutual compatibility to derive a law of existence, stating that existence is merely assumed without a reason in Darwinian evolution. The law: Whatever exists does so because it is mutually compatible with more things than something else. Thus, natural selection receives a holistic setting in which survival of the fittest means maximizing compatible interactions, not numbers of offspring as in the population view. The revolutionary corollary is that, not the organism, nor its population, but the entire particulate manifestation of organism-environment synergy, whose existence issues from such a selective dictum,

---

[1]Developed from a talk presented at the dedication of the Environmental Sciences Laboratory building, Oak Ridge National Laboratory, Oak Ridge, Tennessee, February 26-27, 1979. University of Georgia, Contributions in Systems Ecology, No. 47, and Okefenokee Ecosystem Investigations, Paper No. 7.

becomes the true unit of organic evolution. I will derive organism-environment coevolution from simple principles in a later section.

When I discovered the cited works in ecological psychology, I had already independently arrived at unity of the organism-environment complex by trying to examine the interrelationship through combined frames of empirical ecology and mathematical system theory (Patten et al. 1976, Patten 1978a, Patten and Auble 1979, in press). The identity constraints of distributive and conservative system coupling (e.g., Caswell et al. 1972) rigidly fused organism and environment together; they are not separable in models, so why should they be so in nature? Then I discovered that my theory was not original. The German physiologist von Uexküll (1926) produced a remarkable look-alike 50 years earlier, calling his unit of organism-environment synergy a "function circle." Mine I term an "environ," and it is this entity which is here nominated for elementary particle status in ecology. In previous papers the environ has been surrounded by an elaborate embroidery of mathematical system theory so that many of its features as a rich new concept have not been well communicated to the general ecologist. Here, I want to try to bring out some of these recondite but all important characteristics a little better.

A word about terminology. In constructing environ theory to its present form, I marked the various plateaus as they were reached with new words, to hold the place, so to speak, and make it possible to explore further avenues and then return. The new terms tend to be resisted by my students, referees, and readers, which impedes acceptance of the theory. However, I am not ready to discard them even though they are not essential because they are expressive of key ideas. I will simply ask the reader to be tolerant; ignore the terms if necessary but hold the thoughts. The words in question are holon, creaon, genon, taxon, and environ. In addition, I will here take one further lexical liberty to implant the environ-as-particle concept as deeply in the collective ecological psyche as possible. I will refer to the environ center as its nucleus and to the remainder as enviroplasm.

The environ is a relativistic particle, as my title indicates, because its center uniquely gives meaning to the rest of it in the whole system context, and vice versa. The ecological psychologists speak in this connection of "affordances," properties which resemble our "niches" and to which I will again refer later. If there is a singular significance to the relativity, to the particulate and holistic character of the environ, it is in its capacity to encompass a decidedly new view of nature. When the meanings which my terminology circumscribes are fully comprehended, with or without the words themselves, the transition from perceiving a world full of organisms to comprehending instead a world of environs is substantially achieved. The transformation is profound, and I hope I can convey some sense of it, and its value, in what follows.

THE ENVIRONUCLEUS

Holons ($\underline{H}$)

System theory defines systems as partially interconnected sets of "objects," and then defines objects and their interactive coupling. Each theory (e.g., Gill 1962, Zadeh and Desoer 1963, Wymore 1967, Klir 1969, Windeknecht 1971, Mesarovic et al. 1970, Padulo and Arbib 1974, Mesarovic and Takahara 1975, Rosen 1978) is different in its exact formalism and details, but in all of them an object is in essence an input-state-output-entity. Stimuli (inputs) are converted to responses (outputs) according to the condition (state) of the object when the stimulus is received. Since problems of scale, organization level, etc., are always difficult in ecology, I chose to explicitly incorporate hierarchical considerations into environ theory by adopting Koestler's (1967) term holon for system theoretic objects. The determinate stimulus-response relationship of a holon $\underline{H}$ is expressed by two functions: a state transition function

$$\phi'': Z \times X \rightarrow X, \tag{1}$$

which generates state dynamics by mapping inputs Z and states X into subsequent states, and a response function,

$$\rho: Z \times X \rightarrow Y, \tag{2}$$

which generates response dynamics by taking inputs and states into outputs Y.

System theorists have not been interested, in general, in the nature of environment. Expressions (1) and (2) are basically designed to generate time-dependent behavior (Y) of holons given external drives (Z) and internal states (X). Where is environment in (1) and (2)? Input comes from and output goes to environment, so in some way these two expressions of the holon's nature as an open system are determinants of the object's environment. For clarity we can be explicit about time. Let A be any one of the sets Z, X, and Y whose elements are time functions on specificable time intervals. Define A(t) as the value of the functions in A at time t; A_t as the functions after but including time t, A^t as the functions prior to and terminating at t, and $A_{tt'}$ and $A^{tt'}$ as the functions on the intervals $[t,t')$ and $(t,t']$, respectively, $t' \geq t$. Here a parenthesis indicates an open interval endpoint and a bracket a closed one. The forward behavior of a holon beginning at time t can then be written as

$$\phi_{tt'}: Z_{tt'} \times X(t) \to X(t') \tag{3}$$

and

$$\rho_t: Z_t \times X(t) \to Y_t \ . \tag{4}$$

The outputs generated in (4) are available to stimulate other holons, and to the extent that they do so they become elements of the environments of those holons. Hence, (3) and (4) represent an environment-generating potential, and for this environmental aspect of the holon I employ the term genon. The genon G generates potential components of the environments of other objects, and the collection of realized potentials represents the output environment of the holon in question. The relativity of output to input is explicit in (4).

The inputs in (3) and (4) have been selected by the holon from outputs generated within the holon's environment prior to time t. This input environment is, in effect, defined relative to the holon by the latter's reception of input at time t. Any elements of "environment" which do not contribute to the observed response in effect are meaningless to the object and therefore not part of its input environment. It is only by output that input, and hence input environment, can be known. The implicit creation of environment, therefore, in the act of receiving stimuli is a second environmental aspect of the holon to which I refer by using the term creon. Just as the genon generates initially the object's output environment, the creon C creates terminally its input environment, which may be modeled as follows to bring out the relativity of input to output:

$$\psi^{tt'}: Y^{tt'} \times X(t') \to X(t) \tag{5}$$

and

$$\psi^{t'}: Y^{t'} \times X(t') \to Z^{t'} \ . \tag{6}$$

where $t \leq t'$. Expression (5) represents a retrospective state transition function taking outputs into past states, and (6) is a stimulus function which maps outputs and states into inputs. Generalizing in the manner of (1) and (2), the retrospective transition function is

$$\psi' : Y \times X \to X \ , \tag{7}$$

and the stimulus function is

$$\psi : Y \times X \to Z \ . \tag{8}$$

Just as (2) generates the proximal portion of output environments in response to stimuli from input environments, (8) determines the proximal portion of input environments which relate to observed outputs that are consequences.

Consider the following system of three interacting holons:

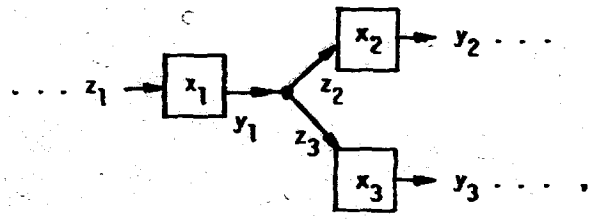

(9)

where $z_i \in Z_i$, $x_i \in X_i$, and $y_i \in Y_i$, $i=1,\ldots,3$. The input environment of $\underline{H}_1$ consists of stimulus z_1 and all unspecified structures and phenomena generating z_1. The input environment of $\underline{H}_2$ consists of z_2, $\underline{H}_1$ which generates y_1, and again z_1 and the unspecified relationships that generate it. Similarly, the input environment of $\underline{H}_3$ consists of z_3, $\underline{H}_1$ through its output y_1, and once more z_1 and the prior distal phenomena leading to it. However, the input environments of $\underline{H}_2$ and $\underline{H}_3$ are referenced by z_2 and z_3, respectively, which may or may not be identical, depending on how the two holons perceive y_1. Thus, y_1 represents potential output environments of $\underline{H}_1$, but actualization of this potential is determined by $\underline{H}_2$ and $\underline{H}_3$. The output environment of $\underline{H}_2$ consists of response y_2, and all unspecified structures and phenomena issuing from y_2. The output environment of $\underline{H}_3$ similarly consists of the proximal portion y_3 together with all unspecified relationships generated distally by y_3. The output environment of $\underline{H}_1$ consists of the response y_1, its actualizations z_2 and z_3 and $\underline{H}_2$ and $\underline{H}_3$, and their responses y_2 and y_3, and subsequent unspecified actualization and their distal propagations.

The identity constraints that bind this system together, as the system theorist would write them, are $y_1 \equiv z_2$ and $y_1 \equiv z_3$. However, we have allowed for the possibility that $\underline{H}_2$ and $\underline{H}_3$ may see y_1 differently, hence we must write $y_1^{(2)} \equiv z_2$ and $y_1^{(3)} \equiv z_3$, $y_1^{(2)} \not\equiv y_1^{(3)}$ necessarily, to incorporate this relativistic property. Assuming that in some sense Z_2 and Z_3 are implicit in Y_1, we can construct Y_1 to accommodate this assumption by letting $Z_2 \subset Y_1$ and $Z_3 \subset Y_1$. Then, the response functions (2) for system (9) are

$$Z_1 \times X_1 \to Y_1 \begin{cases} \supset Z_2 \times X_2 \to Y_2 \\ \supset Z_3 \times X_3 \to Y_3 \end{cases} . \tag{10}$$

Z_1 represents the proximal input environment (or realized niche, see later) of $\underline{H}_1$. Y_1 represents the corresponding proximal output environment potential which is actualized (Z_2 and Z_3) by interactions with $\underline{H}_2$ and $\underline{H}_3$. These interactions generate further output environment potentials Y_2 and Y_3 which will be actualized by whatever holons, available from the mutual compatibility test (see later section "Enviroplasm" on consistency), can compatibly read them as inputs. Thus, a stream of causes and effects is generated by the initial response of $\underline{H}_1$ to Z_1, which is properly the output environment of $\underline{H}_1$ even though other holons realize the original potential represented by Y_1. For (9) the stimulus functions (8) are

$$\begin{aligned} Y_2 \times X_2 \to Z_2 &\equiv Y_1^{(2)}, Y_1^{(2)} \times X_1^{(2)} \to Z_1^{(2)} \\ Y_3 \times X_3 \to Z_3 &\equiv Y_1^{(3)}, Y_1^{(3)} \times X_1^{(3)} \to Z_1^{(3)} \end{aligned} , \tag{11}$$

where relativistic outputs, states, and inputs are $Y_1^{(2)} \subset Y_1$, $Y_1^{(3)} \subset Y_1$, $X_1^{(2)} \subset X_1$, $X_1^{(3)} \subset X_1$, $Z_1^{(2)} \subset Z_1$, and $Z_1^{(3)} \subset Z_1$. Here, a causal stream is traced retrospectively from each ultimate output of the system (Y_2 and Y_3) back to the proximal stimulus Z_1. The nature of this stimulus, and hence of the more distal input environment of $\underline{H}_1$, is imparted by the stimulated holons $\underline{H}_2$ and $\underline{H}_3$, which define through the interaction constraints $Z_2 \equiv Y_1^{(2)}$ and $Z_3 \equiv Y_1^{(3)}$ the response $\{Y_1^{(2)} \cup Y_1^{(3)}\} \subseteq Y_1$ of $\underline{H}_1$, and thus its proximal input environment $\{Z_1^{(2)} \cup Z_1^{(3)}\} \subset Z_1$. By such means we come to the view of $\underline{H}_1$ as the nucleus, in (10), of an output environment (genon case) and, in (11), of an input environment. $\underline{H}_2$ and $\underline{H}_3$ are similarly the centers for their own above-described environments.

Taxons

Classically, proximal stimulation in the organism-environment interaction is considered to underdetermine its distal referent, the input environment (Turvey and Shaw 1979, Shaw and Turvey, in press). The restricted vocabulary of physical stimuli does not relate very well to the enriched experience of integrated environments, and subjective "epistemic mediation" is called forth to modify the objective inputs accordingly. Epistemic entities are inserted between the proximal stimulus and the response-relevant input to derive environmental complexity and meaning from physical simplicity and nonspecificity.

Thus, for example, in metaphysics Kant introduced human knowledge between a formless, qualityless, unknowable absolute reality (noumena) to obtain a known reality (phenomena) consisting of Intuitional Forms (space, time) and Categories (quality, quantity, substance, causality, etc.). In linguistics, Whorf (1940) inserted language between environment and integrated behavior: "We dissect nature along lines laid down by our native languages. . . . We cut nature up, organize it into concepts, and describe significances as we do, largely because we are parties to an agreement to organize it in this way--an agreement that holds throughout our speech community and is codified in the patterns of our language." In physiology, sensory perception is limited by sense organs, but may be expanded by instruments such as microscopes, Geiger counters, radiotelescopes, spectrophotometers, and TV receivers. In psychology, cognition is a complex set of reactions to stimuli involving perception, integration, representation, description, thought, language, memory, and learning: ". . . objective knowledge seems possible and through objective knowledge the universe appears systematic and predictable. Yet knowledge . . . must always be created by the listener . . ." (Maturana 1970). In science, a paradigm or disciplinary matrix consisting of symbolic generalizations, particular models, shared values, and concrete exemplars is thrown up between objective nature and scientific understanding (Kuhn 1970).

All these variations on the theme of epistemic modification of "outside," so that it means something "inside" which leads to an adaptive response, give to the reacting holon immense power to create subjective input environments. These become, in fact, the operational environments of nature because they are the ones to which the holons respond. Only the responses (outputs) are objective, and these are immediately made subjective by the next living objects they stimulate. Thus, ecosystems would seem to be peculiar mixes of objective (physical) forces and fluxes organized based on subjective (phenomenal) input environments into wholes whose parts are physically consistent and mutually compatible, whatever the subjective qualities of the said environments with respect to their defining holons.

Such is the natural consequence of an orthodoxy based on organism-environment dualism which sees the organism as distinct from its environment, necessitating epistemic constructs to order interactions between the two. Patten and Auble (1979, in press) considered the capability of creating and reacting to phenomenal inputs to be limited to, in fact be a universal property of, living holons. Such objects make models of their reality, which is the essence of any epistemic modification process, and for such modeling holons these authors used the term taxon from biosystematics. To describe the stimulus-response relationship of taxons, a modeling function converting objective inputs Z to subjective inputs $\hat{Z}$ is required to be added to the genon state transition and response functions:

$$\begin{aligned} \mu'' &: Z \times X \to \hat{Z} \\ \phi'' &: \hat{Z} \times X \to X \\ \rho &: \hat{Z} \times X \to Y \quad . \end{aligned} \tag{12}$$

The genon modeling function to go with (3) and (4) is

$$\mu_t : Z_t \times X(t) \to \hat{Z}_t \quad . \tag{13}$$

The corresponding retrospective model for tracing outputs back through subjective inputs to physical inputs is:

$$\begin{aligned} \phi' &: Y \times X \to X \\ \sigma &: Y \times X \to \hat{Z} \\ \mu' &: \hat{Z} \times X \to Z \quad , \end{aligned} \tag{14}$$

and the modeling function that adds to (5) and (6) is

$$\mu^{t'}:\hat{Z}^{t'} \times X(t') \rightarrow Z^{t'} \quad . \tag{15}$$

Thus, we come to discriminate two classes of holons: those that are alive and produce phenomenal inputs through modeling $\underline{H}(\phi'', \rho, \mu'')$ or $\underline{H}(\phi', \sigma, \mu')$, called taxons, and those that are not alive and respond to physical inputs per se, $\underline{H}(\phi', \rho)$ or $\underline{H}(\phi', \sigma)$.

The ecological psychologists see the taxon differently. The only alternative, they say, to epistemically modifying the force-flux stream of physical reality is to endow the physical stimuli themselves with the requisite qualities to keep them from underdetermining environment. The role of the taxon is then only to respond to complex, high-order stimuli, or objective invariants representing them, without the intervention of phenomenal variables. In organism-environment synergy, the organism is directly responsive to, and a reflection of, a complex situation which it fits perfectly. Compatibility and consistency are inherent, and adaptation is complete. Adjunctive logic is the basis: logical propositions may be conditional (if a then b), causal (because a, then b), or adjunctive (since a, then b). Conditional propositions are a poor model for natural law because there are too many ways they can be valid (a can be true or false, and so can b). In causal logic the premise a must be true and the consequent b may be true or false, but must follow from the premise. Natural laws seem to be satisfied by causal propositions, but the intuitive notion of causal determinism is difficult to capture in formal statements (e.g., Patten et al. 1976, p. 462). The adjunctive proposition entails a true premise a and a true consequence b that follows necessarily from it. "The adjunctive formulation seems to capture the sense that laws of nature apply in an inexorable manner to grind out reality . . . . the nature of living organisms fits with the nature of the universe in a tightly constrained system of mutual compatibility relations . . . in that a given species adjunctively entails its environment and a given environment adjunctively entails its species" (Turvey and Shaw 1979).

These authors are thus led from interactional to transactional modes of description: In the traditional interactional form of inquiry, consistent with organism-environment dualism, "rigidly separate things, that is, things that one assumes can be described indifferent to any joint operation, are isolated and held to relate through causal interaction * * * Physics . . . has transformed its observation base . . . to one where the focus is system, described in full. This contemporary trend in scientific inquiry is referred to as transaction. In a transactional inquiry it is impossible to study one component of a system as an element in isolation; rather, components necessarily co-implicate their complementary aspects * * * the concept of transaction, unlike . . . interaction, should preserve the sense of reciprocity among complementary components which is essential to the integrity of any system. Clearly, the transactional form of inquiry is consistent with animal-environment synergy" (Shaw and Turvey, in press).

Whether physical inputs sufficiently determine environment for living entities, or whether details are subjectively colored in, is not particularly an ecological issue so long as both models admit the transactional mode of description. The environucleus occupies the center of a transactional universe, the environ, and it is our perception and model of that universe which are important and which ultimately derive from the defining holon's responses irrespective of the latter's propensities for epistemic mediation.

ENVIROPLASM

In the conception of von Uexküll (1926) each holon $\underline{H}$, alive or not, is the epicenter of a holistic universe $\{\underline{H}, \underline{H}^*\}$, where $\underline{H}^*$ is the environment that closes on $\underline{H}$ through the function circles of the latter (e.g., Patten et al. 1976, Figs. 4 and 5, and Patten and Auble 1979, in press, Fig. 3a,b). Even if it existed, it would be impossible to establish closure in the complexities of the real world: "All the [function] circles, however far they lie separated from one another in the world-as-sensed [$\underline{H}'$], intersect in the steering apparatus of the inner world [$\underline{H}$], and then separate from one another again in the world of action [$\underline{H}''$]" (von Uexküll 1926). Therefore, the holon-environment complex is open, $\{\underline{H}', \underline{H}, \underline{H}''\}$, where $\underline{H}'$ is input environment and $\underline{H}''$ output environment. Nonetheless, it is instructive to investigate some elementary properties of the hypothetical closed particle $\{\underline{H}, \underline{H}^*\}$ as a basis for understanding the more realistic case.

Consistency

It is not unreasonable to consider that $\underline{H}^*$, like its nuclear counterpart, bears definition and treatment also as a general system: Then, the laws of $\underline{H}$ and $\underline{H}^*$ are

$$\underline{H}: \begin{cases} \phi'': Z \times X \to X \\ \rho: Z \times X \to Y \end{cases}, \qquad \underline{H}^*: \begin{cases} \phi''^*: Z^* \times X^* \to X^* \\ \rho^*: Z^* \times X^* \to Y^* \end{cases} \tag{16}$$

for nonmodeling cases, and

$$\underline{H}: \begin{cases} \phi'': \hat{Z} \times X \to X \\ \rho: \hat{Z} \times X \to Y \\ \mu: Z \times X \to \hat{Z} \end{cases}, \qquad \underline{H}^*: \begin{cases} \phi''^*: \hat{Z}^* \times X^* \to X^* \\ \rho^*: \hat{Z}^* \times X^* \to Y^* \\ \mu^*: Z^* \times X^* \to \hat{Z}^* \end{cases} \tag{17}$$

for taxons, understanding that in any unit $\{\underline{H}, \underline{H}^*\}$ any of the four combinations of $\underline{H}$ and $\underline{H}^*$ as modeling or nonmodeling may occur.

To show that $\underline{H}$ and $\underline{H}^*$ are consistent when both are nonmodeling holons, let Z and Z^* represent their respective sets of admissible inputs, and let Y and Y^* represent sets of outputs corresponding to the admissible inputs. Let $z \in Z$, $z^* \in Z^*$, $y \in Y$ and $y^* \in Y^*$ be particular time functions on an appropriate interval T. The constraints of coupling, $y^* = z$ and $y = z^*$, require that $Y^* \subset Z$ and $Y \subset Z^*$; the output sets of $\underline{H}^*$ and $\underline{H}$ are bounded, respectively, by the input sets of $\underline{H}$ and $\underline{H}^*$. Suppose there were environmental outputs $Y^* = Y^* - Z$ that were inadmissible as inputs to $\underline{H}$, or nuclear outputs $Y = Y - Z^*$ inadmissible as inputs to $\underline{H}^*$. $\bar{Y}'$ is inconsistent with $\underline{H}$ because it implies inputs $\bar{Z}^* - Z^*$ to $\underline{H}^*$ that could not have been generated by $\underline{H}$ since $\bar{Z}^* \subset Z^*$. Similarly, $\bar{Y}$ is inconsistent with $\underline{H}^*$ because it implies inputs $\bar{Z} - Z$ to $\underline{H}$ that could not have been generated by $\underline{H}^*$ since $Y^* \subseteq Z$. Therefore, neither $\bar{Y}'$ nor $\bar{Y}$ exist in the closed system $\{\underline{H}, \underline{H}^*\}$, and $Y = Z^*$ and $Y^* = Z$. These identities establish the mutual consistency of $\underline{H}$ and $\underline{H}^*$.

The situation when $\underline{H}$ and $\underline{H}^*$ are both taxons is more complicated, but the result is the same. For the physical admissible inputs, $y^* = z$ and $y = z^*$ lead to $Y^* = Z$ and $Y = Z^*$ as above. But for the phenomenal (modeled) inputs, $y^* \neq z$ and $y \neq z^*$. However, $\hat{Z}$ and $\hat{Z}^*$ represent many-to-one maps of members from Z and Z^*, respectively. Therefore, with each z_i associate $Y_i^* \subset Y^*$ and with each z_i^* associate, $Y_i \subset Y$, where Y_i^* and Y_i are exhaustive ($\bigcup_i Y_i^* = Y^*$ and $\bigcup_i Y_i = Y$) but not necessarily mutually exclusive. Then, not as identities but as equalities because of qualitative differences, $Y_i^* = z_i$ and $Y_i = z_i^*$, and thus $Y^* = \hat{Z}$ and $Y = \hat{Z}^*$. $\underline{H}$ and $\underline{H}^*$ are again consistent systems.

In the foregoing, it is the closure between nucleus and environment that provides the input-output constraints from which consistency derives. In the case of the open particle, $\{\underline{H}', \underline{H}, \underline{H}''\}$, the available constraints are $y' = z$ and $y = z''$, which are insufficient to establish consistency. Any claim to consistent interaction between a holon and its input or output environment must therefore rest on special conditions, either implicit or explicit, that equally constrain the sets in question as would a closing relation, $y'' = z'$. In general, therefore, it is not necessary that a holon and its open environment be wholly consistent. Input environments may deliver inadmissible inputs to the nucleus, and the latter may generate irrelevant outputs to the output environment. The key to a holon's environmental accord would seem to lie in the extent of closure between its output and input environments. That closure, as well as the degree of harmony or adaptation which consistency would represent, might well be measured by the sets $Y' - Z$ and $Z'' - Y$, if they could be known. Of course, it should be remembered that ecosystems tend to be causally closed (Hutchinson 1948, Patten et al. 1976), so there are preponderantly consistent holon-environment interactions expected within these natural structures.

Coevolution

I have felt from general consistency considerations that organisms coevolve with their environments, and thus that whole ecosystems are probably coevolutionary units (Patten 1975, Patten et al. 1976). For the closed particle $\{\underline{H}, \underline{H}^*\}$, coevolutionary aspects look as follows.

As before, Z and Z^* are admissible input sets, and Y and Y^* are corresponding output sets. For the case of nonmodeling holons, consistency conditions are $Y^* \subset Z$ and $Y \subset Z^*$. Let $\underline{H}^*$ change, due to change in ν^* or μ^* or both, causing a different set of outputs Y^{*1} to be generated. Some of these new outputs, $\bar{Y}^{*1} = Y^{*1} - Z$, will be inadmissible as inputs to $\underline{H}$. Others, $Z^1 = Y^{*1} - \bar{Y}^{*1}$, will be admissible, but the admissible input set will normally be reduced compared to the original, $Z^1 \subset Z$. All the inputs $Z - Z^1$, and the corresponding outputs $Y - Y^1$, are no longer available as part of the behavioral repertoire of $\underline{H}$; $\underline{H}$ is restricted:

$$\underline{H}^1 : \begin{cases} \nu : Z^1 \times X \to X \\ \mu : Z^1 \times X \to Y^1 \end{cases} . \tag{18}$$

With $Y^1 \subset Y$, Z^* becomes restricted to $Z^{*1} \subset Z^*$, and thence Y^{*1} also, to $Y^{*2} \subset Y^{*1}$. Thus, $\underline{H}^*$ becomes restricted:

$$\underline{H}^{*1} : \begin{cases} \nu^* : Z^{*1} \times X^* \to X^* \\ \mu^* : Z^{*1} \times X^* \to Y^{*2} \end{cases} . \tag{19}$$

The original environmental change has initiated a contracting process which progressively, with each cycle around the $\{\underline{H}, \underline{H}^*\}$ interaction loop, attenuates the behavioral range, i.e., the input and output sets, of both $\underline{H}$ and $\underline{H}^*$. To interrupt this process, $\underline{H}$ must adapt its input set to admit the new behaviors $\bar{Y}^{*1}$ generated by the initial change in $\underline{H}^*$. A mutant $\underline{H}^1$, with input set $Z^1 = Y^{*1}$ rather than $Z^1 = Z^{*1} - \bar{Y}^{*1}$, reestablishing consistency, $Y^{*1} \subset Z^1$ and $Y^1 \subset Z^{*1}$, is required. Thus, $\underline{H}$ and $\underline{H}^*$ must coevolve, or contract their input and output sets (overspecialization) to the point of vanishing.

If the particle is open, $\{\underline{H}', \underline{H}, \underline{H}''\}$, rather than closed and $\underline{H}'$ undergoes a change, then its state transition and response sequences will change, and consequently output from the unit will change. But nothing else in $\{\underline{H}', \underline{H}, \underline{H}''\}$ must change because there is no feedback to $\underline{H}$ through $\underline{H}'$. Therefore, alteration of $\underline{H}'$ carries no impetus for a coevolutionary response of the remaining system. If $\underline{H}'$ changes, however, its output set changes to Y'^1, some of whose members $Y'^1 - Y'^1 - Z$ will be inadmissible as inputs to $\underline{H}$. But a contracting process is not initiated as in the closed-system case, because the reduced output set Y^1 of $\underline{H}$, corresponding to the reduced inputs $Z^1 = Y'^1 - Y'^1$ to $\underline{H}$, is not propagated around to the input set of $\underline{H}'$. So, the behavior of $\underline{H}$ will be narrowed due to its exposure to a restricted input environment, but that is all. There is no force for a coevolutionary response of $\underline{H}$ in this situation.

The completely open and completely closed holon-environment particles are both extreme idealizations of the real condition. The contents of enviroplasm consist of other holons with which the nuclear holon shares reciprocal interactions, both affecting and being affected by the others. Each such mutual interaction corresponds to a closing of the particle structure, and that closed portion will be subject to coevolution with the nucleus to truncate each contracting process set in motion by environmental change. When the tendency of ecosystems to causal closure is again remembered, system-wide coevolutionary processes must be widespread in these structures by the considerations so far presented. However, ecosystems are not inhabited solely by nonmodeling holons. It is taxons that make them most interesting.

Consider a closed holon environment unit in which $\underline{H}$ and $\underline{H}^*$ are both taxons [Eq. (17)]. Let $\underline{H}^*$ change due to change in one or more of its defining functions; ν^*, μ^* and ρ^*. A different set of outputs Y^{*1} is generated, some of which, $\bar{Y}^{*1} = Y^{*1} - Z$, will as before be inadmissible as inputs to $\underline{H}$. The admissible ones, $Z^1 = Y^{*1} - \bar{Y}^{*1}$, are a reduced set compared to the original $Z^1 \subset Z$. $\underline{H}$ now has the power to make models from the physical input set. Before the change in $\underline{H}^*$, the outputs $Y^* \subset Z$ were being modeled to produce a phenomenal input set $\hat{Z}$, a reduced set compared to Z, $\hat{Z} \subset Z$, since modeling is many-to-one. With the $\underline{H}^*$ change, the reduced physical set Z^1 is modeled to a phenomenal set $\hat{Z}^1 \subset Z^1$, and the question now is the relation of $\hat{Z}^1$ to the original $\hat{Z}$. There are several possibilities: (1) $\hat{Z}^1 = \hat{Z}$, the modeling power of $\underline{H}$ has compensated for the restriction of physical inputs and innovatively maintains $\underline{H}^*$ just as rich in effective inputs to $\underline{H}$ as before; (2) $\hat{Z}^1 > \hat{Z}$, $\underline{H}$ has overcompensated for the reduced variety of physical input by increasing the variety of phenomenal inputs; and (3) $\hat{Z}^1 < \hat{Z}$, the modeled inputs have been reduced in response to the reduction of physical inputs. The first case prevents the initiation of a contracting

interaction sequence which would have to be countered by coevolution, but we have to question the capacity of modeling to achieve this under significant reductions in the variety of physical inputs to $\underline{H}$. The second case is unlikely, but if it happened, it would give rise to an expanding process around the interaction loop which, as in the case of attenuating sequences, could only be stopped by coevolution. The third case is most plausible. Reduced physical inputs lead to even sharper reductions in phenomenal inputs because of the reductionist nature of the modeling functions, and a contracting process is started that only an evolutionary response can end. Thus, most plausibly, the modeling capability probably exacerbates the nuclear response to environmental change and enhances the coevolutionary tendency. Taxons in ecosystems add to the coevolution that closed particles already confer, and the conclusion that ecosystems are coevolutionary units seems promising indeed.

Complementarity

The particle treatment of the holon-environment relationship implies that the two interacting members are complementary, as does the whole thrust of our characterization, invoking such concepts, as it has, of organism-environment synergy, the mutual compatibility law, adjunctive logic, transactive holism, and the theory of affordance. Complementation, or reciprocity, is a stronger property than consistency, which is all we have needed to derive coevolution. Ecologists often think of niches and organisms as complementary expressions of the same thing, and niche is merely a restriction of input environment (Patten and Auble 1979, in press), so holon-environment complementarity is quite consistent with traditional ecology.

Complementation within the closed $\{\underline{H}, \underline{H}^*\}$ structure is straightforward to establish. For nonmodeling elements, consistency constraints $Y^* \equiv Z$ and $Y \equiv Z^*$ are simply substituted into (16):

$$\underline{H}: \begin{cases} \phi'': Y^* \times X \to X \\ \alpha: Y^* \times X \to Y \end{cases}, \qquad \underline{H}^*: \begin{cases} \phi''^*: Y \times X^* \to X^* \\ \alpha^*: Y \times X^* \to Y^* \end{cases}. \tag{20}$$

The reciprocal cross couplings between $\underline{H}$ and $\underline{H}^*$ through Y and Y^* are apparent. In the same way, the nonmodeling elements of the open model $\{\underline{H}', \underline{H}, \underline{H}''\}$ are complementary at the points where they interact.

$$\underline{H}': \begin{cases} (\phi'')': Z' \times X' \to X' \\ \alpha': Z' \times X' \to Y' \end{cases}, \qquad \underline{H}: \begin{cases} \phi'': Y' \times X \to X \\ \alpha: Y' \times X \to Y \end{cases}, \qquad \underline{H}'': \begin{cases} (\phi'')'': Y \times X'' \to X'' \\ \alpha'': Y \times X'' \to Y'' \end{cases}. \tag{21}$$

For the taxon-taxon interaction, (17) becomes in the closed particle case:

$$\underline{H}: \begin{cases} \phi'': \hat{Z} \times X \to X \\ \alpha: \hat{Z} \times X \to Y \\ \alpha: Y^* \times X \to Z \end{cases}, \qquad \underline{H}^*: \begin{cases} \phi''^*: Z^* \times X^* \to X^* \\ \alpha^*: \hat{Z}^* \times X^* \to Y^* \\ \alpha^*: Y \times X^* \to \hat{Z}^* \end{cases}, \tag{22}$$

and in the open particle case;

$$\underline{H}': \begin{cases} (\phi'')': \hat{Z}' \times X' \to X' \\ \alpha': \hat{Z}' \times X' \to Y' \\ \alpha': Z' \times X' \to \hat{Z}' \end{cases}, \qquad \underline{H}: \begin{cases} \phi'': \hat{Z} \times X \to X \\ \alpha: \hat{Z} \times X \to Y \\ \alpha: Y' \times X \to \hat{Z} \end{cases}, \qquad \underline{H}'': \begin{cases} (\phi'')'': \hat{Z}'' \times X'' \to X'' \\ \alpha'': \hat{Z}'' \times X'' \to Y'' \\ \alpha'': Y \times X'' \to \hat{Z}'' \end{cases}. \tag{23}$$

Therefore, for all forms of holon-environment interactions, nonmodeling and modeling, the interactions are always complementary.

This complementarity property is developed to its extreme in the theory of affordance (Gibson, e.g., 1979, Chap. 8) in an unorthodox but compelling organism-relative description of environment. In the same vein as one of my favorite quotations from von Uexkull (Patten 1978a, p. 210), "where

there is a foot there is a path" etc., Gibson (1979, pp. 127, 141, 143) writes: "The affordances of the environment are what it offers the animal, what it provides or furnishes * * * [affordances] have to be measured relative to the animal. They are unique for that animal. They are not just abstract physical properties * * * An affordance . . . points two ways, to the environment and to the observer . . . . the information to specify the utilities of the environment is accompanied by information to specify the observer himself . . . . This is only to reemphasize that exteroception is accompanied by proprioception—that to perceive the world is to experience oneself. This is wholly inconsistent with dualism in any form . . . . The awareness of the world and one's complementary relations to the world are not separable * * * Affordances are properties taken with reference to the observer. They are neither physical nor phenomenal." Again, the ecological niche seems to have been reaching toward something like affordance.

Since my theory possesses two environments, I am immediately in a position to suggest a concept that is to *output environment* what *affordance* is to *input environment*. And so I would introduce the effectance to be what a holon affords to its environment. However, the ecological psychologists have seen the wisdom of this before me even though they lacked an explicit output environment. Turvey and Shaw (1979) define the "effectivity" of living things as "a specific combination of the functions of its tissues and organs taken with reference to an environment. By this conception an animal is defined as a set of effectivities, or an effectivity structure." For me, an effectance, or effectivity, is an output niche (Patten and Auble, in press), the *proximal* portion of output environment that is in direct contact with the defining holon.

Thus, a creson $\underline{C}$ and its input niche $\underline{N}'$, as well as a genon $\underline{G}$ and its output niche $\underline{N}''$, are complementary units, and this property can be extrapolated through all holons in $\underline{H}'$ and $\underline{H}''$, respectively, so that by induction a holon becomes complementary with the entirety of both its input and output environments. The complementarity properties expressed in Eqs. (20) - (23) are the core of any unitary character which the holon-environment relationship might possess that would justify the particulate treatment proposed in this paper. Formal complementarity is inherent in the holon-environment interrelationship, and is the basis for a fuller account of environment in organism-relevant terms, such as has already been begun by Gibson and his followers.

ENVIRONS

Now we arrive at the point of bringing into focus and justifying the particulate conception. The environ, an operationally defined unit that has been the object of my research for the past several years, is a frighteningly large and complex object to be considered an "elementary particle." However, as I said in the Introduction, particle theories have been very powerful in science, and the analogy between the environ and a cell or atom is designed to exploit the perspectives and well-known properties that come with these units. A cell has a nucleus and cytoplasm and a plasma membrane or cell wall boundary. An atom has a nucleus and associated ring structure of energy states within which electrons whirl around in clouds. A cell interacts with other cells to form tissues, and an atom shares electrons with other atoms to form molecules. Environs have these same features, in addition to some which they do not share with cells or atoms, and vice versa. So let me say what an environ is, and give some examples from our work, and then return to the case for its corpuscular nature.

Definition

Mason and Langenheim (1957) did not include indirect factors in their concept of environment for a particular reason: "To introduce indirect factors into causal relationships within the environment is to introduce an infinite regress into the system of explanation. Every cause has in turn itself a cause which becomes an indirect cause of the most recent effect. The regress is toward the limbo of ultimate cause along an infinitely reticulating path. . . . To include such relations in environment is to confuse environment with its history."

In the present theory, however, indirect causes and effects are explicitly included in environment. Input environment is seen as an afferent system leading to the defining holon, and *output environment is an efferent structure leading away [e.g., expression (9)]:*

$$\ldots \underline{H}'(-\infty,t] \rightarrow \underline{H}(t) \rightarrow \underline{H}''[t,\infty) \ldots \qquad (24)$$

Or, explicitly representing proximal environments as input and output niches, $\underline{N}_i'$ and $\underline{N}_i''$, respectively:

$$\ldots \{\underline{H}' - \underline{N}'\}(-\infty,t) \rightarrow \underline{N}'(t) \rightarrow \underline{H}(t) \rightarrow \underline{N}''(t) \rightarrow \{\underline{H}'' - \underline{N}''\}(t,\infty) \ldots \quad (25)$$

Temporally the nuclear holon and its niches are in instantaneous contact at time t T, and the remaining portions of the input and output environments represent histories (- ,t) and futures (t,). Environment, except for its proximal segments, is history and is the future.

The environ is a device to truncate the infinite regressions and progressions propagating, respectively, inward toward and outward from the holon center. The defining holon is a member of a system, and the truncation occurs at the system boundary, i.e., at the point when and where the system (as a higher level holon) receives its environmental input and generates its environmental output. An environ is thus a holon together with the associated within-system environment of that holon (Patten 1978a).

Examples

The environments, and implicitly environs, discussed so far have been perfectly general cause-propagating structures, with full richness of the physical mediators of causality included. Now, in providing examples, we have to become specific, and this means cryptic because ecological models of reality are spare shadows indeed. However, nothing of principle is sacrificed (in fact, principles sometimes stand out better) in the restriction of attention to simple models.

Example 1. Accordingly, Fig. 1 shows a static, steady-state, compartment model for the hydrologic water balance within the watershed of Okefenokee Swamp in southeastern Georgia (Patten and Matis, in press). The four compartments of this model, representing water storages in the surface and shallow subsurface reservoirs of the swamp and uplands, are the nuclear holons in this case. This model was chosen for purposes here in part because the compartments are abiological, almost nothing in nature could be simpler than a stored quantity of water, and yet these holons have interesting environs that can become the subject of quite detailed analysis (Patten and Matis, in press).

The methodology of "environ analysis" (Matis and Patten, in press) is still under development, having descended from economic input-output analysis through several lines of major development by my students, John Finn (1977) and Craig Barber (1978a,b), as reviewed by Barber et al. (1979). If $\underline{H}_i'$ and $\underline{H}_i''$ are the input and output environs, respectively, of component $\underline{H}_i$ in an ecosystem $\underline{H}$, then unit environs normalized to the inputs z_i and outputs y_i are:

$$E_i' = \underline{H}_i'/y_i, \quad E_i'' = \underline{H}_i''/z_i, \quad i=1,\ldots,n, \quad (26)$$

where n = 4 for the Fig. 1 model. Figure 2 illustrates the unit input environ $E_1',\ldots,E_4'$ of the Okefenokee model, and Fig. 3 the unit output environs E_1'' and E_3'', as computed by the environ analysis methods. E_2'' and E_4'' are not shown because in this model there are no groundwater inputs from outside the watershed boundary.

The data in Figs. 2 and 3 are interpreted as follows. For example, Fig. 2a depicts the input environ associated with one unit of surface water loss (bold arrow) in the Okefenokee uplands. A bold arrow identifies the nuclear holon in each diagram. To generate 1.0 unit of output from $\underline{H}_1$ requires an input environ E_1' consisting of other holons representing water storages, interconnected by intrasystem flows, all driven by system environmental inputs. Thus, (1) the storages are 0.0231 units in $\underline{H}_1$ and 0.0382 in $\underline{H}_2$; (2) the internal flows are 0.1210 units from $\underline{H}_1$ to $\underline{H}_2$, and the same from $\underline{H}_2$ to $\underline{H}_1$; and (3) the input is 1.0 unit as rainfall into $\underline{H}_1$. Water destined to exit the watershed as $\underline{H}_1$ output has the following characteristics: (1) water in $\underline{H}_1$ has contacted an expected number of 1.12 holons since first entering $\underline{H}_1$, counting one visit for contact preceding final exit, with a standard deviation of 0.37 visits; (2) water in $\underline{H}_2$ has contacted a mean of 0.12 holons since first entering $\underline{H}_2$, with a standard deviation of 0.14 visits; (3) water stored in or leaving the system from $\underline{H}_1$ has resided in $\underline{H}_1$ a total expected time of 8 days, with coefficient of variation 1.0; and (4) water in or leaving as output from $\underline{H}_1$ has resided in $\underline{H}_2$ a total mean of 14 days, with 4.2 coefficient of variation.

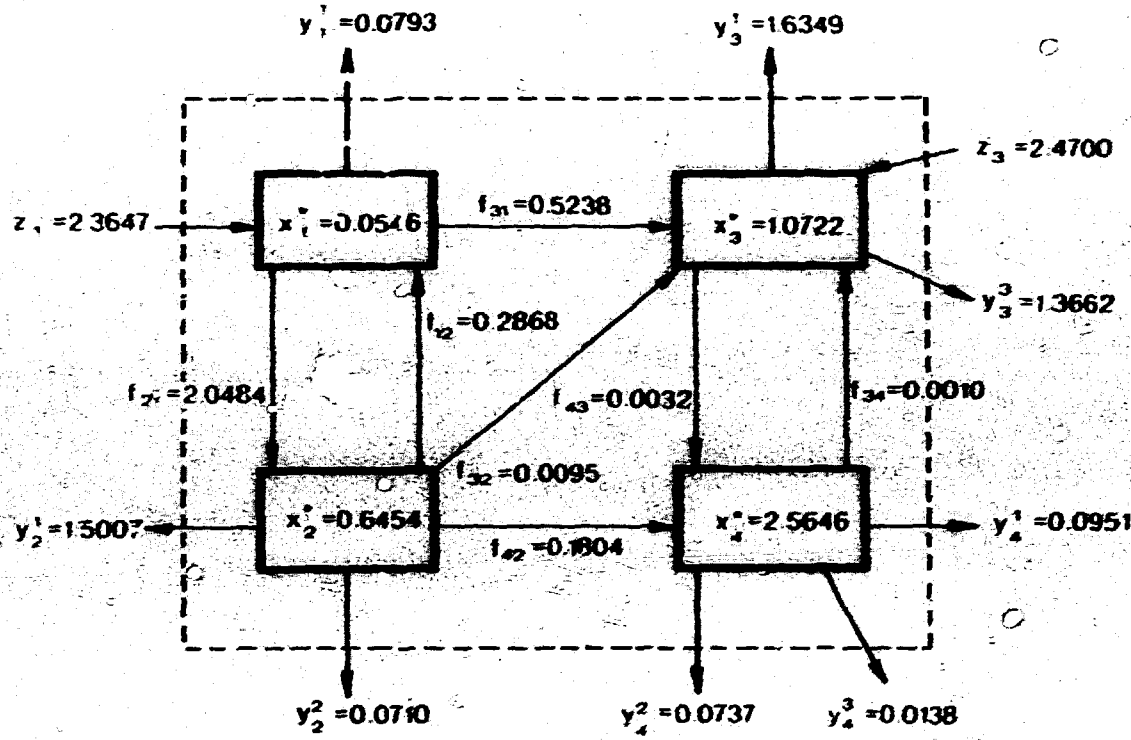

Figure 1. Four-compartment water budget model of the watershed of Okefenokee Swamp. The compartments are: x_1^* = upland surface storage, x_2^* = upland groundwater storage, x_3^* = swamp surface storage, x_4^* = swamp subsurface storage. Inputs are: z_1 = upland precipitation, z_2 = swamp precipitation. Outputs are: y_i^1 = evapotranspiration, i=1,...,4, y_2^2 = deep seepage, y_3^3 = sheet and stream flow, y_4^2 = percolation, deep seepage, and lateral leakage, and y_4^3 = baseflow. Intra-system flows are: f_{21} = infiltration and percolation, f_{31} = channel and overland flow, f_{12} = baseflow and interflow, f_{32} = baseflow, f_{42} = lateral seepage, f_{43} = infiltration and percolation, and f_{34} = upwelling and water-level rise. Storage units are 10^9 m^3 year y^{-1}. Areal basis is the entire watershed.

In a similar way, consider in Fig. 3b the output environ generated by one unit of precipitation input (bold arrow) into the swamp surface water. The unit output environ E_3^* produced by this input consists of other holons again representing storages, intrasystem flows between these holons, and outputs to the system environment. Thus, (1) the storages are 0.3569 units in $\underline{H}_3$ and 0.0149 in $\underline{H}_4$; (2) the internal flows are 0.0011 units from $\underline{H}_3$ to $\underline{H}_4$, and 6×10^{-6} units from $\underline{H}_4$ to $\underline{H}_3$; and (3) the outputs are 0.5442 + 0.4547 = 0.9989 units from $\underline{H}_3$ and 0.0006 + 0.0001 + 0.0004 = 0.0011 units from $\underline{H}_4$, totaling 1.0 unit. Water which entered the watershed as $\underline{H}_3$ input has the following characteristics: (1) water in $\underline{H}_3$ will contact a mean of only 1.00 compartment before it leaves, counting 1.0 visit for initial entry, with a standard deviation of 0.002 units; (2) water in $\underline{H}_4$ will contact a mean of 0.001 holons before its last exit from $\underline{H}_4$, with a standard deviation of 0.03 visits; (3) water stored in or entering the system via $\underline{H}_3$ will reside in $\underline{H}_3$ a total mean of 130 days, with coefficient of variation 1.0; and (4) water in or entering the system at $\underline{H}_3$ will reside a total expected time in $\underline{H}_4$ of 5 days, with coefficient of variation 43.3. The other diagrams in Figs. 2 and 3 can be similarly interpreted.

Example 2. Figure 4 illustrates a second compartment model that has been described and discussed in several previous papers (Patten et al. 1976, Patten 1978b, Patten and Auble 1979, in press). This is a model of energy flow in Cone Spring, a cold water spring ecosystem in Iowa (Tilly 1968). Aside from energy being the causality mediator, this model differs from the previous one in several important respects. First, four of the five compartments are taxons, and second, there are five feedback loops in this system whereas the Okefenokee water model has only two local loops of negligible system-wide significance. In other words, the Fig. 4 system is a more realistic

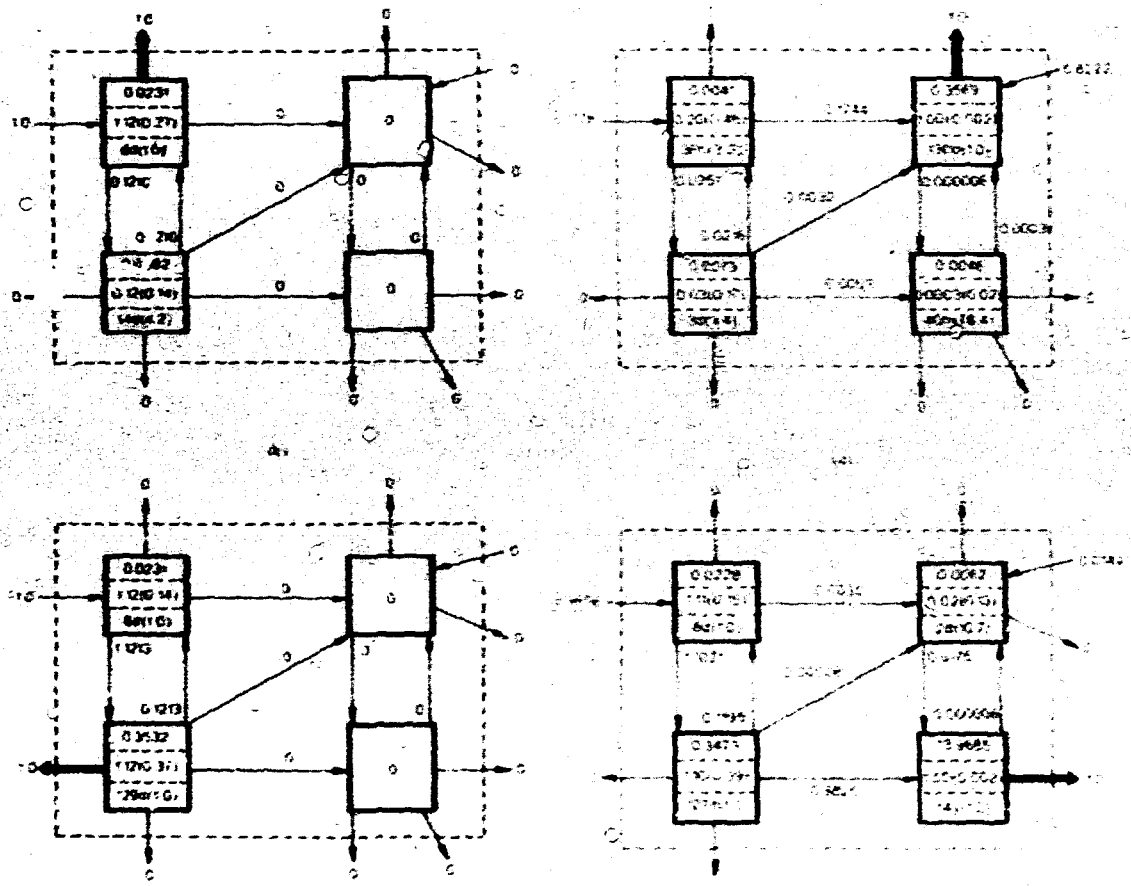

Figure 2. Unit input environs of the Fig. 1 Okefenokee water budget model: (a) E_1', (b) E_2', (c) E_3', and (d) E_4'. Each diagram shows water flows (10^9 m^3 $year^{-1}$) and storages (10^9 m^3) required to generate one unit of output (10^9 m^3 $year^{-1}$) at the bold arrow. Flows are associated with arrows, and storages appear as the upper number in each box. The middle numbers of each box represent, without parentheses, the mean number of past visits to that box of water presently in or leaving the compartment with the bold arrow, and within parentheses, associated standard deviations. Both these numbers are unitless. The bottom numbers in each box represent, without parentheses, the expected past residence time in that box of water presently in or exiting from the bold arrow compartment, and within parentheses, associated coefficients of variation. The means are in h = hours, d = days, or y = years, and the coefficients of variation are unitless.

ecosystem structure than the first. Its environs have been illustrated in the above-cited references, and it is not to the point here to show them again. But the dominance relations indicated in a control diagram (Fig. 5) based on the comparison of the input and output environs is of interest in justifying the particulate concept.

In Fig. 5, $\underline{H}_1$ is absolutely dominant (1.0) over $\underline{H}_2,\ldots,\underline{H}_5$. This is obvious from Fig. 4 because there is no feedback from any of these latter holons to $\underline{H}_1$ by which the dominance might be mitigated. The nonmodeling detritus holon $\underline{H}_2$ controls bacteria $\underline{H}_3$ moderately (0.69), detritivores $\underline{H}_4$ quite strongly (0.85), and the carnivores $\underline{H}_5$ also moderately (0.55). The bacteria $\underline{H}_3$ are moderately dominant over detritivores $\underline{H}_4$ (0.58), and the latter strongly control the carnivores $\underline{H}_5$ (0.89). The point I made in the other papers bears repeating here because, intuitively, dominance is thought of as a transitive relation. If $\underline{H}_i$ dominates $\underline{H}_j$, and $\underline{H}_j$ dominates $\underline{H}_k$, then $\underline{H}_i$ would be considered to dominate $\underline{H}_k$. Such simplicity is not in the nature of systems, however. In Fig. 5, $\underline{H}_3$ controls $\underline{H}_4$ controls $\underline{H}_5$, but $\underline{H}_5$ dominates $\underline{H}_3$ instead of the other way around as transitivity would give. Therefore, we have an example of

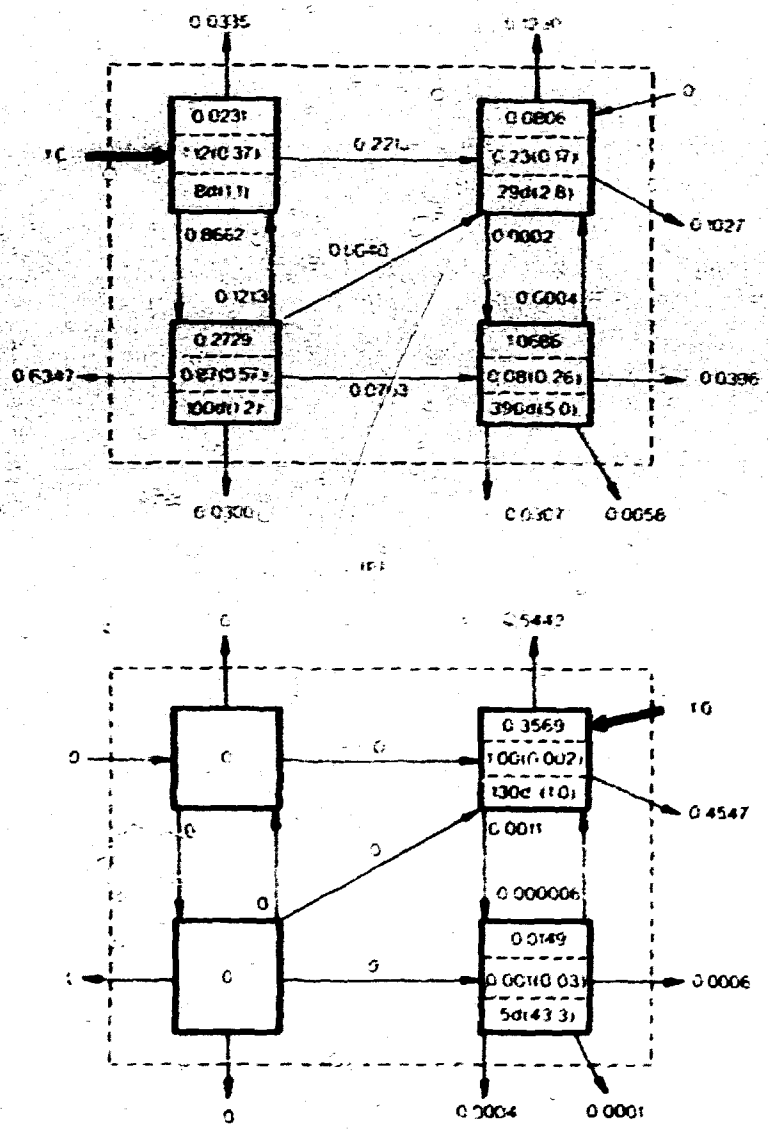

Figure 3. Unit output environs of the Fig. 1 Okefenokee water budget model: (a) E_1'' and (b) E_3''. Each diagram shows water flows (10^9 m^3 $year^{-1}$) and storages (10^9 m^3) generated by one unit of input (10^9 m^3 $year^{-1}$) at the bold arrow. Flows are associated with arrows, and storages appear as the upper number in each box. The middle numbers in each box represent, without parentheses, the expected number of future visits to that box of water presently in or entering the compartment with the bold arrow, and within parentheses, associated standard deviations. Both these numbers are unitless. The bottom numbers in each box represent, without parentheses, the expected future residence time in that box of water presently in or entering the bold arrow compartment, and within parentheses, associated coefficients of variation. The means are in h = hours, d = days, or y = years, and the coefficients of variation are unitless.

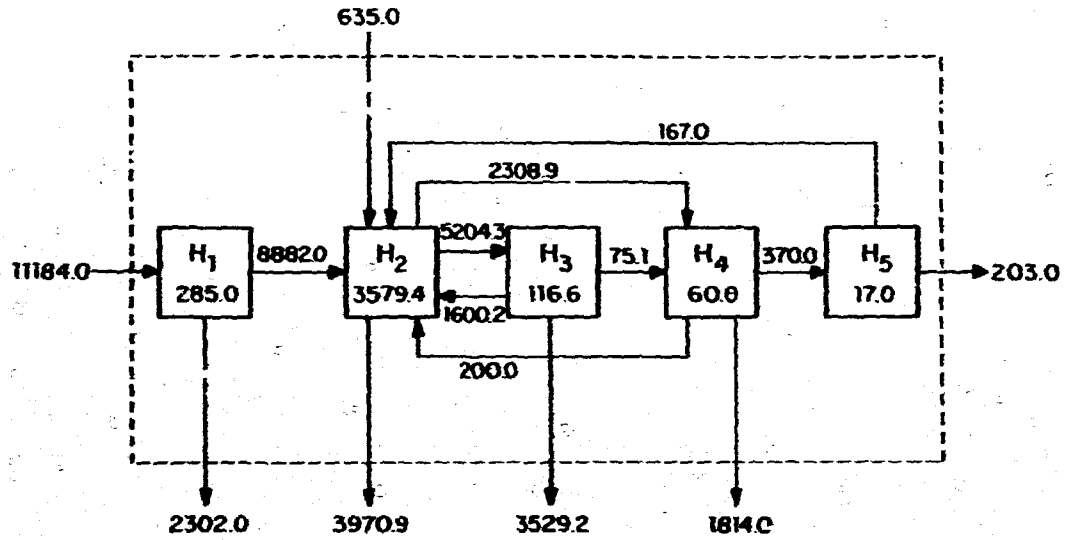

Figure 4. Static energy flow model of a cold water spring ecosystem $\underline{H}$, Cone Spring, Iowa (Patten et al. 1976, p. 572 ff.). The components are $\underline{H}_1$ plants, $\underline{H}_2$ detritus $\underline{H}_3$ bacteria, $\underline{H}_4$ detritivores, and $\underline{H}_5$ carnivores. Storage units shown within the boxes are kcal m^{-2}, and flows associated with arrows are in kcal m^{-2} $year^{-1}$.

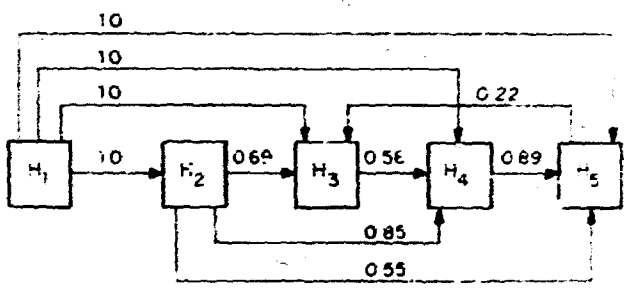

Figure 5. Control diagram depicting dominance relationships between components of the Fig. 4 cold spring energy model. For each holon pair $\underline{H}_i$, $\underline{H}_j$, the associated number is $1-c_{ij}$, where $c_{ij} = (-a''_{ij})^{-1}/(-a'_{ij})^{-1}$, $(-a''_{ij})^{-1} = (-A'')^{-1}$ and $(-a'_{ij})^{-1} = (-A')^{-1}$ [Eq. 29].

nontransitive control in an ecosystem model, which must carry over to nature. I think it is important, and I wish I had another model, or better an empirical example, on hand with which to demonstrate it further. I will return to this in the particulate context shortly. Now, let us look at what might be gained (and nothing lost) by considering environs as elementary particles for ecology.

The Cellular Analogy

The living cell has a nucleus, and the environ has a nucleus in its defining holon. The cell has a boundary across which energy, matter, and information are exchanged with the cellular environment. The environ has a boundary, provided by operational definition of the circumscribing system that contains the environucleus; energy, matter, and information are transferred across this boundary. The cell has a cytoplasm which surrounds--environs--its nucleus. The cytoplasm consists of a set of formed elements, organelles, dispersed in a colloidal medium. The function of the formed elements is to carry on the coordinated processes of cellular metabolism under proximal control of elaborate enzyme mechanisms and under ultimate control of the cell nucleus. Enviroplasm consists of a set of formed elements, nonmodeling holons and taxons, dispersed in an ecological space, and carrying on the commerce of ecosystem metabolism under proximal control of elaborate biochemical, ethological, populational, and symbiotic regulatory mechanisms, and under ultimate control of the nuclear holon which, after all, is defining. The cell nucleus is the repository of genetic material, and

is the cent of cellular reproduction in which this material is transferred in[illegible]. The environucleus is not an ferent when it is a living taxon. Only when the defining holon is not alive does it not participat genetically continuous replication of other holons, and hence environs, of its kind. Cells interact by exchange of energy, matter, and information to form tissues, and environs interact in a like manner to form systems. Input and output environs each form a system partition (Patten 1978a, Proposition 3), however, and in this respect there are no transfers of physical or phenomenal quantities between input x input and output x output environs of different holons. But such interactions may occur between input x output environs of the same or different holons. The situation is amenable to an analogy between atoms and environs.

The Atomic Analogy

The compartment models illustrated in Figs. 1 and 4 each possess a characteristic structure that can be represented by a mathematical directed graph. Such digraphs consist of a set of vertices connected by a set of directed branches. The graphs for Figs. 1 and 4 are shown in Fig. 6. It is the province of graph theory to study the mathematical properties of such structures, as structure. That is, the concern is with the topological relationships of the vertices as mediated by the branches. Nothing is flowing; it is a pure structural consideration.

Another one of my students, James Hill (1980), has taken an unorthodox approach to the structure of graphs, departing from the usual modes in graph theory. Hill calls the abstract relationship between vertices "influence," and he has determined an influence measure by which one may uniquely specify any graph structure. One of the first things he learned in his early work was that graphs, for all their abstraction and absence of flows, are dissipative entities. No measure of structure is possible unless the "strength" of influence (I tend to think of gravitation or mutual body attraction here) is reduced with distance as each branch is traversed in forming a path, or branch sequence, from one vertex to another. This knowledge makes possible the analogy between atoms and environs.

The atom consists of a dense, polarized nucleus surrounded by concentric shells of energy levels within which fixed complements of electrons orbit the center. The energy of each level is inverse to distance from the nucleus. Using Hill's graph dissipation property, the environucleus is structurally related to other holons within its environ in decreasing strength with distance, where distance is

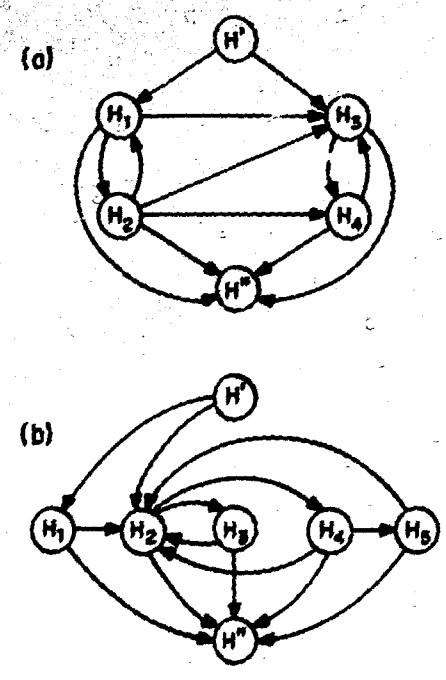

Figure 6. Mathematical graphs of (a) the Fig. 1 Okefenokee water model and (b) the Fig. 4 Cone Spring energy model.

measured as the number of branches in a path from the nucleus to each member holon. Thus, an H_1 branch from the nucleus will occupy the first environ "shell," two branches the second, k branches the k'th, and increasing levels will signify decreasing strength of structural relationship to the defining holon. Of course, an environ has two sets of such concentric structures, one on the input side and one on the output side of the defining holon. Figures 7 and 8 illustrate this conception of environs for, respectively, the Fig. 1 and Fig. 4 compartment models.

Consider Fig. 7a in comparison to the compartmental representations of these same two environs as shown in Figs. 2a and 3a. The concentric rings, progressing outward from the center, represent decreasing structural influence from the nucleus. The proximal ring on each side displays the input and output realized niches. Flows are represented by the connections between rings, and some combination of flows (intensity) and influence (capacity) may form a basis for complementary variable analyses of the kind seen in physical science [e.g., the through and across variables of electrical engineering (Koenig et al. 1967, p. 7 ff.)]. Storages, as given by environ analysis, represent the mass of each environplasmic holon, and these coupled with the influence measure may yield some useful descriptive or functional environ variable. The interholon transfer and residence time information, plus other deterministic and stochastic parameters that further developments in environ analysis can be expected to yield, may similarly be related to structural aspects in ways we cannot now see. In the discussion of Fig. 5, I showed that comparison of input and output environs, in a very simple way (Patten 1978b; Patten and Auble 1979, in press), provided a measure of dominance. There will be many possibilities for input and output environ comparisons, some of them surely to be suggested by the atomic model if it should be pursued further. The point is that these potentialities would not exist without the particle orientation.

Atoms interact to form molecules through shared electrons, and the constraining properties are lawful as summarized in the periodic table of the elements. Environs interact by a sharing of holons,

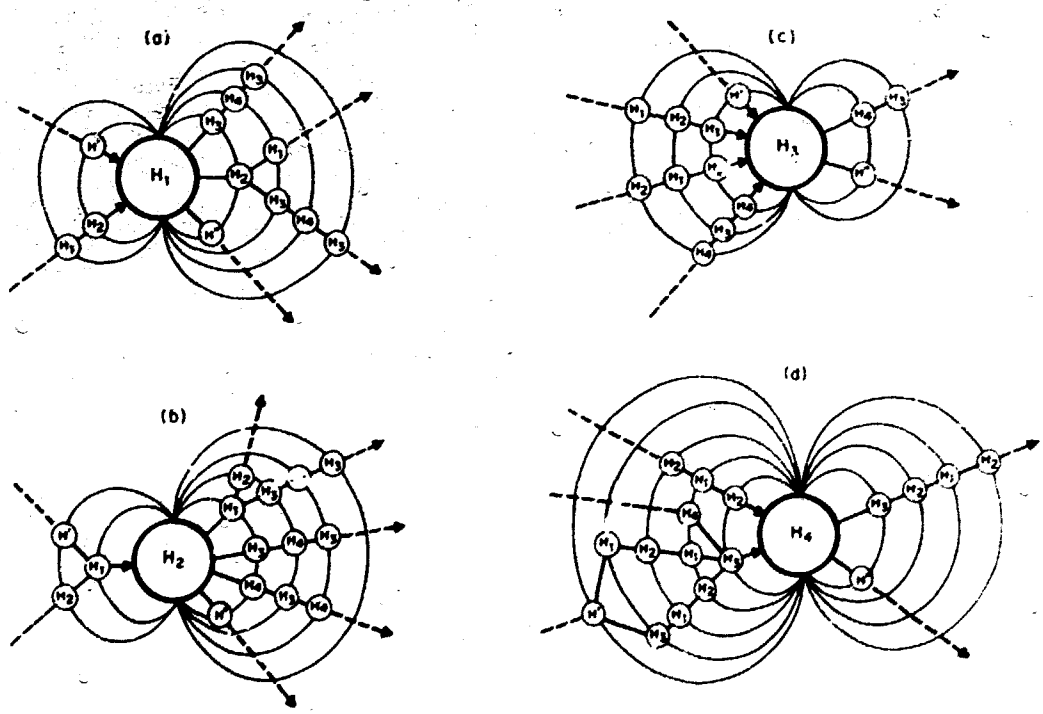

Figure 7. Input and output environs (Figs. 2 and 3) of the Okefenokee water model, displayed as "atoms." For simplicity, several conventions were used in constructing these diagrams: (1) Input environment H' and output environment H'' appear only once on each input and output side, respectively, and always in the "shell" closest to the nucleus as appropriate in each case. (2) Each holon sequence representing a cyclic path terminates in explicit representation after completion of one cycle. (3) No holon is represented more than once in one "ring" or "shell." (4) No divergent paths are depicted on the input sides, and no convergent paths on the output sides.

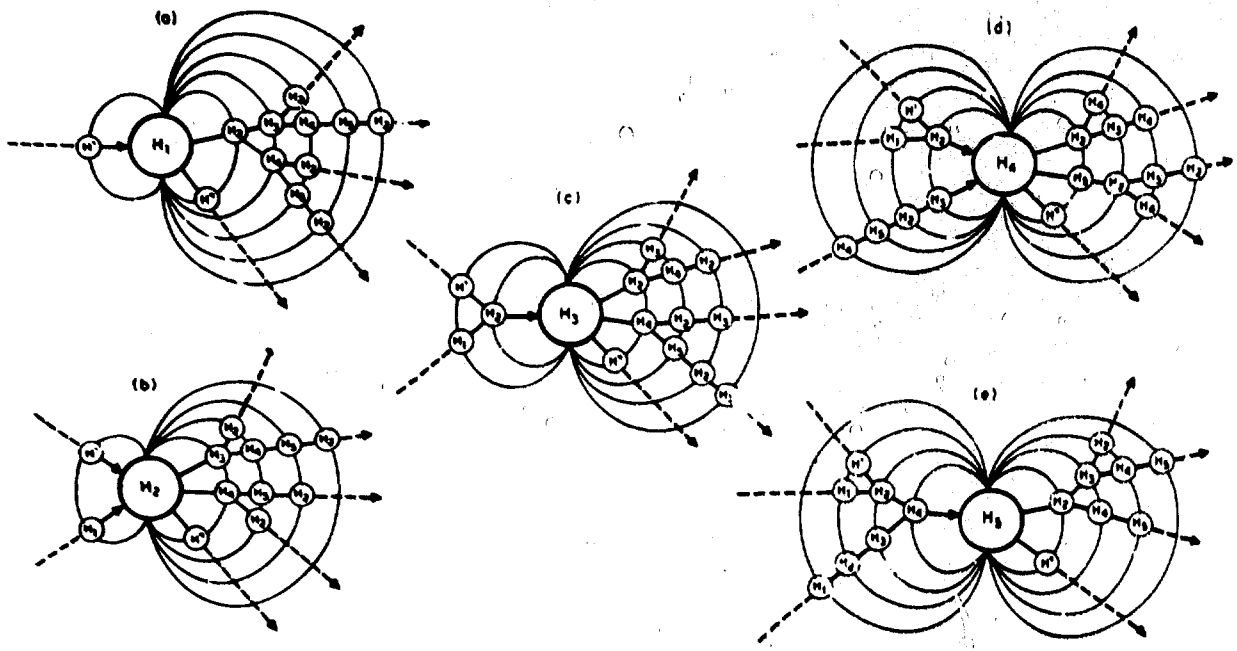

Figure 8. Input and output environs of the Fig. 4 Cone Spring energy model, displayed as "atoms." Diagraming conventions as for Fig. 7.

and a certain parity is observed in the process in that if H_i occurs in the k'th ring of H_j'', then H_j will be found in the k'n ring of H_i' (e.g., Figs. 7 and 8). Is the interaction of environs more lawful than we can discern with our present models such that there might, in fact, exist a periodic table of environs to be discovered? Elton (1927) saw niches as invariant structures that could be realized in different ecosystems by different groups of species, and environs are "extended niches" (Levine 1977, Patten and Auble 1979, in press). The search for constant structure reticulums in enviroplasm would be enhanced and kept in better focus by a particulate conception.

ENVIRON ANALYSIS

The environ, of course, is not an atom or a cell, or any of the other particles that humans use to make order out of the world. It is its own thing, with unique character and properties. Leading among these is bigness, in size and complexity. In this article I have argued to make it in principle small, a reasonable package that, while it might forever defy adequate measurement, can nevertheless be carried comfortably as a concept within the mind. Curiously, even paradoxically, the environ breaks with the particle tradition, for it is internally an antiparticle. As a whole it encompasses *everything of organism-environment* synergy that can be captured by: holism, mutual compatibility, adjunctive logic, transactionism, consistency, coevolution, complementarity, affordance, and whatever else I may have left out (e.g., transitive closure, whose significance I discovered in interaction with another of my students, Robert Bosserman; Patten et al. 1976, p. 530, and Patten 1978a, Proposition 2) that could be used to fuse the thing-environment complex into a single immutable unit.

I said at the outset that my intention would be to elaborate the environ as a concept in ways that previous technical treatments have not been able to do. As far as I can tell I have done this. Now, in this section, I want to stress that the environ as a concept is made possible by the environ as a formal mathematical construct. It is an operational concept, and I want to make several further observations about it from the analysis side.

Duality

The environ as a double structure has immediate technical implications and an enormous ultimate analysis potential. Input and output environs are not mathematical duals, but they have more the character of transposes. Having two environments instead of one leads immediately to expanded horizons for general systems theory. As I pointed out in the Environucleus section, normal system theory is based on the genon state transition and response function pair, Eqs. (1) and (2). These equations generate only futures, hence output environments, and to produce input environments new functions have to be introduced. The retrospective creaon transition and stimulus functions, Eqs. (7) and (8), form the basis for a second system theory to parallel the first. This retrospective theory must now be developed. In interaction with the original, many new understandings, insights, and analyses should ensue. Incidentally, the dual perspective is represented in engineering system theory in the concepts of observability (input environment) and controllability (output environment), originiated by Kalman (1961, Kalman et al. 1961). In brief, a variable is observable by another variable if it is in the input environ of the latter, and controllable if it is in its output environ. It was these concepts that first led me to think about networks in both forward and reverse directions. In engineering, however, this approach serves as methodology rather than as an encompassing paradigm. The duality feature of environ theory is one of its potentially most powerful characteristics, and the Fig. 5 control diagram based on input and output environ comparisons, with the example of nontransitive control which it exhibits, was intended to illustrate this point.

Fundamental Matrices

Environ analysis (Matis and Patten, in press), as it presently stands, is a linear parameterization of general sytems whose results apply under the usual restrictions on linear models--steady state, neighborhood, etc. Consider the standard linear state transition function,

$$\dot{x} = A''x + z \quad , \tag{27}$$

corresponding to Eq. (1), and its retrospective counterpart,

$$\dot{x} = -A'x - y \quad , \tag{28}$$

corresponding to (7). Here x, $\dot{x}$, z and y are column vectors, and A" and A' are square matrices, all dimensioned according to the order of the system, n. A static environ analysis is developed by setting $\dot{x} = 0$ and solving for steady state:

$$x^* = (-A'')^{-1}z = (-A')^{-1}y \quad . \tag{29}$$

The matrices $(-A'')^{-1}$ and $(-A')^{-1}$ are fundamental in the analysis in several ways.

1. Environ computations. Let d_i'' and d_i', $i=1,\ldots,n$, denote the columns of $(-A'')^{-1}$ and $(-A')^{-1}$, respectively, and let D_i'' and D_i' be diagonalized matrices of these vectors. Then, unit environs E_i'' and E_i' [Eq. (26)] are given by:

$$E_i'' = A''D_i'', \; E_i' = D_i'(A')^T, \; i=1,\ldots,n \quad . \tag{30}$$

2. Storage partitions. Let x_{ij}'' be the portion of x_i^* that originates as input z_j, and x_{ij}' be the fraction of x_i^* that leaves the system as output y_j, $i,j=1,\ldots,n$. Let Z and Y be diagonal matrices of z and y, respectively, and let X"(Z) and X'(Y) be matrices whose elements are the respective storage components x_{ij}'' and x_{ij}'. Then:

$$X''(Z) = (-A'')^{-1}Z, \; X'(Y) = (-A')^{-1}Y \quad . \tag{31}$$

For unit inputs or outputs, Z=I and Y=I, I being the identity matrix, we have

$$X''(I) = (-A'')^{-1}, \; X'(I) = (-A')^{-1} \quad . \tag{32}$$

The matrices $(-A'')^{-1}$ and $(-A')^{-1}$ thus directly specify the storage components x_{ij}'' and x_{ij}' scaled to unit input z_j and output y_j values, $i,j=1,\ldots,n$.

3. Residence times. Let p_{ij}'' be the probability that matter in compartment j at time t will be in compartment i at time t+1, and p_{ij}' be the probability that material in j at time t was in i at time t-1, $i,j=1,\ldots,n$. Let Q" and Q' be matrices of these respective probabilities, calculated as:

$$Q'' = (I+hA''), \; Q' = (I+hA') \quad , \tag{33}$$

where h is a scalar chosen to make each diagonal element of Q" and Q' positive. These matrices represent transition matrices for forward and reverse discrete time Markov chains, respectively. Let $\underline{M}''$ and $\underline{M}'$ be the cumulative future and past residence times, respectively, in compartment i of substance in j at time t while the substance remains within the system, and let

$$M'' = (I-Q'')^{-1}, \; M' = (I-Q')^{-1} \quad . \tag{34}$$

Then:

$$\begin{aligned} \underline{M}'' &= hM' & \underline{M}' &= hM' \\ &= h(I-Q'')^{-1} & &= h(I-Q')^{-1} \\ &= h[I-(I+hA'')]^{-1} & &= h[I-(I+hA')]^{-1} \\ &= (-A'')^{-1} \quad , & &= (-A')^{-1} \quad . \end{aligned} \tag{35}$$

The fundamental matrices $(-A'')^{-1}$ and $(-A')^{-1}$ give the expected future and past residence times directly. Moreover, they are also involved in variance calculations. Let M_Δ'' and M_Δ' be diagonal matrices of $(-A'')^{-1}$ and $(-A')^{-1}$, respectively, and let M_2'' and M_2' be matrices whose entries are the squares of the corresponding entries in $(-A'')^{-1}$ and $(-A')^{-1}$. Then, the variances of the future and past residence times can be written, respectively,

$$V'' = (2M_\Delta'' - I)(-A'')^{-1} - M_2'', \; V' = (2M_\Delta' - I)(-A')^{-1} - M_2' \quad . \tag{36}$$

The simple matrices $(-A'')^{-1}$ and $(-A')^{-1}$, easily derived from the coefficient matrices A" and A' of the original system equations. (27) and (28), are truly remarkable. They provide a simple, straightforward computation of environs [Eqs. (30)] that was never achieved in the former methods of my students (Finn 1977, Barber 1978a,b). They not only allow inputs and outputs to be partitioned amongst storages, they are the partition [Eqs. (32)]. Storage analyses were not a part of any of the previous formulations, only flow analyses. The fundamental matrices also not only allow the computation of residence times, they are those residence times Eqs.[(35)]. Moreover, in Markov chain theory, which lacks the dual perspective, the "residence time" of a particle within a system is normally stated to be $\underline{M}''$ (e.g., Kemeny and Snell 1960). With the two-environment model, total residence time is seen as the sum of two residence times, $\underline{M}''$ and $\underline{M}'$.

In all the history of linear differential equations and linear system theory, with all the applications of linear models to applied problems in tracer kinetics and compartment modeling, and with all the use of Leontief input-output analysis in economics (which environ analysis makes obsolete, or at best cumbersome), the central position of $(-A'')^{-1}$ and $(-A')^{-1}$ was never appreciated. Yet, within a short time of my acquainting James Matis with the environ perspective, he discovered the described relationships, which are elegant in their simplicity and synthesis quality. In new work beyond Matis and Patten (in press), additional properties are beginning to appear, for example, the fundamental matrices also figure in a system transfer function in the time domain.

SUMMARY

Thus, analytically as well as conceptually, the environ is a promising new object for ecological and systems study. It captures many aspects of the world as they seem to be in a way that has never been done before, that is, in a whole systems way. The environ is quintessentially particulate because all the physical and phenomenal interactions which occur within it join it into a single whole. The organism and its environment are one, and I have taken noteworthy cues for this from von Uexküll, who I hope can be discovered by ecology, and more recently the ecological psychologists who have distilled a lot of philosophy and psychology in support of organism-environment synergy.

By now it should appear that the terms "environucleus" and "enviroplasm" are not so rash as they may have seemed at the beginning. But if they offend, as I said about the holon,..., environ family of words, put them aside too but keep the thoughts. I also commented early that the environ concept has power to alter one's view of the world. This is certainly true in my case over the three or four years I have been living with its emergence. I hope that the account I have given here may start a similar process for others.

The environ builds from the general system theory of abstract objects. Zadeh and Desoer (1963) and Mesarovic and Takahara (1975) have been the two versions that have guided me the most. These are powerful theories indeed upon which to base this new concept, and I feel secure about the formal basis for environ theory, even though all the bridges to real ecology will not be made for a very long time. I also feel quite certain that environs can make a mark on system theory, which only modestly, if ever, acknowledges environment. The retrospective state transition function and stimulus function [Eqs. (7)] and (8) are new innovations, and I was led to the former by work of Barber (1978a) on reverse Markov chains.

The recognition of epistemic mediation of inputs as "modeling" is my idea, derived from exchanges with another of my students, Gregor Auble, who has co-authored the papers (Patten and Auble 1979, in press) in which I first use the term "taxon." To say all living things model and nonliving things do not is a bold stroke indeed. It remains to be seen, of course, but I am buttressed with reactions to this from several generations of students and others. Of course, the ecological psychologists make a strong case for realism, and modeling as I have construed it is rationalistic. The connection to niche is made in the Patten and Auble papers, which is satisfying in view of the high status of this concept in ecology. The niche is made a little primitive by the environ, however. Pursuing my commitment to organism-environment synergy, I introduced a number of concepts in support of it: adjunctive logic, transaction and affordance from ecological psychology, and consistency, coevolution, and complementarity from my own work. The last three properties illustrate the power of good formalism; imagine being able to establish a strong case for whole system coevolution with a few modest assumptions. Gibson's affordance concept is the strongest expression of organism-environment complementarity available.

I gave examples of environs (Figs. 2, 3, and 5) so they could be seen in familiar terms on my way to making a case for their corpuscular nature. The argument for particulate status is utilitarian, and the case is reasonable. I hope that ecology will undertake the study of environs; they can help it become the systems science it needs to be.

LITERATURE CITED

Barber, M. C.
1978a. A retrospective Markovian model for ecosystem resource flow. Ecol. Model. 5:125-1 5.

Barber, M. C.
1978b. A Markovian model for ecosystem flow analysis. Ecol. Model. 5:193-206.

Barber, M. C., B. C. Patten, and J. T. Finn
1979. Review and evaluation of input-output flow analysis for ecological applications. pp. 43-72. IN J. H. Matis, B. C. Patten, and G. C. White (eds.), Compartmental Analysis of Ecosystem Models. Statistical Ecology, Vol. 10. International Co-operative Publishing House, Fairland, Maryland.

Caswell, H., H. E. Koenig, J. A. Resh, and Q. E. Rose
1972. An introduction to systems science for ecologists. pp. 3-78. IN B. C. Patten (ed.), Systems Analysis and Simulation in Ecology, Vol. 2. Academic Press, New York.

Elton, C.
1927. Animal Ecology. Sidgwick and Jackson, London.

Finn, J. T.
1977. Flow analysis: A method of analyzing flows in ecosystems. Ph.D. Thesis. University of Georgia, Athens, Georgia.

Gibson, J. J.
1961. Ecological optics. Vision Res. 1:253-262.

Gibson, J. J.
1966. The problem of temporal order in stimulation and perception. J. Psychol. 62:141-149.

Gibson, J. J.
1979. The Ecological Approach to Visual Perception. Houghton Mifflin, Boston.

[illegible] A.
1962. Introduction to the Theory of Finite State Machines. McGraw-Hill, New York.

Hill, J. V.
1980. Influence: A theory of the structural organization of systems. Ph.D. Thesis. University of Georgia, Athens, Georgia.

Hutchinson, G. E.
1948. Circular causal systems in ecology. Ann. N.Y. Acad. Sci. 50:221-246.

Kalman, R. E.
1961. On the general theory of control systems. pp. 481-492. IN Automatic and Remote Control, Proc., First International Congress IFAC, Moscow, 1960. Butterworth, London.

Kalman, R. E, Y. -C. Ho, and K. S. Narendra
1961. Controllability of linear dynamical systems. pp. 189-213. IN Contrib. Differential Equations, Vol. 1.

Kemeny, J. G., and J. L. Snell
1960. Finite Markov Chains. Van Nostrand-Reinhold, Princeton, New Jersey.

Klir, G. J.
1969. An Approach to General Systems Theory. Van Nostrand-Reinhold, Princeton, New Jersey.

Koenig, H. E., Y. Tokad, and H. Kesavan
1967. Analysis of Discrete Physical Systems. McGraw-Hill, New York.

Koestler, A.
1967. The Ghost in the Machine. Macmillan, New York.

Kuhn, T. S.
1970. The Structure of Scientific Revolutions. University of Chicago Press, Chicago.

Levine, S. H.
1977. Exploitation interactions and the structure of ecosystems. J. Theor. Biol. 69:345-355.

Mason, H. L., and J. H. Langenheim
1957. Language and the concept of environment. Ecology 38:325-340.

Matis, J. H., and B. C. Patten
Environ analysis of linear compartmental systems: The static, time invariant case. Proc., 42nd Session, International Stat. Institute, Manila, Philippines, Dec. 4-14, 1979 (in press).

Maturana, H. R. 1970. Biology of cognition. Biol. Computer Lab.
Report No. 9, Dept. of Electrical Engineering, Univ. of Illinois, Champaign, Illinois.

Mesarovic, M. D., D. Macko, and Y. Takahara
1970. Theory of Hierarchical, Multi-level Systems. Academic Press, New York.

Mesarovic, M. D, and Y. Takahara
1975. General Systems Theory: Mathematical Foundations. Academic Press, New York.

Padulo, L., and M. A. Arbib
1974. System Theory, A Unified State-Space Approach to Continuous and Discrete Systems. Saunders, Philadelphia.

Patten, B. C.
1975. Ecosystem as a coevolutionary unit: A theme for teaching systems ecology. pp. 1-8. IN G. S. Innis (ed.), New Directions in the Analysis of Ecological Systems, Pt. 1. Society for Computer Simulation, La Jolla, California.

Patten, B. C.
1978a. Systems approach to the concept of environment. Ohio J. Sci. 78:206-222.

Patten, B. C.
1978b. Energy environments in ecosystems. pp. 853-857. IN F. A. Fazzolare and C. B. Smith (eds), Energy Use Management, Vol. 3. Pergamon, New York.

Patten, B. C., and G. T. Auble.
1979. Systems approach to the concept of niche. Synthese 43:155-181.

Patten, B. C., and G. T. Auble
System theory of the ecological niche. Am. Nat. (in press).

Patten, B. C., R. W. Bosserman, J. T. Finn, and W. G. Cale
1976. Propagation of cause in ecosystem. pp. 457-579. IN B. C. Patten (ed.), Systems Analysis and Simulation in Ecology, Vol. 4. Academic Press, New York.

Patten, B. C., and J. H. Matis.
The water environs of Okefenokee Swamp. Ecol. Model. (in press).

Rosen, R.
1978. Fundamentals of Measurement and Representation of Natural Systems. North-Holland, New York.

Shaw, R., and M. T. Turvey
Coalitions as models for ecosystems: A realist perspective on perceptual organization. IN M. Kubovy and J. Pomerantz (eds.), Perceptual Organization. Erlbaum, Hillsdale, New Jersey (in press).

Shaw, R., M. T. Turvey, and W. Mace
Ecological psychology: The consequences of a commitment to realism. IN W. Weimer and D. Palermo (eds.), Cognition and the Symbolic Processes, Vol. 2. Erlbaum, Hillsdale, New Jersey (in press).

Tilly, L. J.
1968. The structure and dynamics of Cone Spring. Ecol. Monogr. 38:169-197.

Turvey, M. T., and R. Shaw
1979. The primacy of perceiving: An ecological reformulation of perception for understanding memory. pp. 167-221. IN L.-G. Nilsson (ed.), Perspectives on Memory Research: Essays in Honor of Uppsala University's 500th Anniversary. Erlbaum, Hillsdale, New Jersey.

Turvey, M. T., R. Shaw, and W. Mace
1978. Issues in the theory of action: Degrees of freedom, coordinative structures and coalitions. pp. 557-595. IN J. Raquin (ed.), Attention and Performance, Vol. 7. Erlbaum, Hillsdale, New Jersey.

von Uexkull, J.
1926. Theoretical Biology. Kegan, Paul, Trench, Tubner and Co., London.

Whorf, B. L.
1940. Science and linguistics. Technol. Rev. 42:229-231, 247-248. p. 213. IN J. E. Carrol (ed.), Language, Thought and Reality; Selected Writings of Benjamin Lee Whorf. MIT Press, Cambridge, Massachusetts.

Windeknecht, T. G.
1971. General Dynamic Processes, A Mathematical Introduction. Academic Press, New York.

Wymore, A. W.
1967. A Mathematical Theory of Systems Engineering: The Elements. Wiley, New York.

Zadeh, L. A., and C. A. Desoer
1963. Linear System Theory. The State Space Approach. McGraw-Hill, New York.

CHALLENGES IN LANDSCAPE ECOLOGY

Frederick E. Smith
Graduate School of Design
Harvard University
Cambridge, Massachusetts

S. I. AUERBACH: As I said earlier, our three previous speakers were alumni of this institution. The fourth speaker is not, but we have had a very close intellectual association with him for a number of years. Professor Fred Smith started out part of his career at the University of Michigan in Ann Arbor in the 1950s and early 1960s when Ann Arbor was one of the epicenters of ecology in the United States. There was a group of marvelous people there. Fred, Larry Slobodkin, Nelson Hairston, and others were all carving out new and exciting dimensions in population ecology. Suddenly in the mid-1960s (those of us down here were sort of keeping track of it), we were both profoundly surprised and pleased when Fred began to espouse ecosystem orientations in his thinking. Fred swung over to that very completely when the IBP was being formed in the United States. He took many of the leadership roles and became the director of the Analysis of Ecosystems project which was the umbrella project over the biome programs. It was, as I remember, quite an experience for Fred in the sense of getting involved in an integrated quasi-management role with fellows who were biome directors and who were somewhat individualistic and cantankerous. Soon after that, Fred moved on to Harvard University to the Graduate School of Landscape Architecture and Design, and his interest again shifted, now to looking at the broader regional problems of ecology somewhat different than the more narrowly focused analysis of ecosystems. Again, this has been of very much interest to us, because we had also been seeing the regional phenomenon, regional ecology, as an area which we found needed more and more consideration as we looked at the overall problems you have heard about in the last two or three days, - man and how he is going to use his landscape. So it is with a great deal of pleasure that I introduce Professor Fred Smith.

* * * * *

Thank you very much, Stan. It is always a pleasure to visit Oak Ridge. I remember, in the early fifties, when Nelson Hairston and I thought you were far out to come to a place like this.

I presume that the "cesium forest" has had its day. You have lots of room here for new forests reflecting new opportunities: perhaps an "alternative energy forest," definitely a "model forest" with hierarchies of vegetation and arrows pointing in all directions. Of course, you should have a "publication forest," a tree for each publication not only to commemorate the event but also to replace the tree used to publish the paper. Finally, you already have an "official forest," a forest of offices that we are now dedicating.

I wish today to talk about a subject that has apparently seemed unimportant to scientists, i.e., it has been neglected by environmental scientists. This is the relationship between science and design. Design is not my field, and I am a poor designer even though I work in a school of design with architects, landscape architects, city and regional planners, etc. Nonetheless, I would like to begin with some remarks about design.

Landscape designs are the creations of landscape architects, or regional physical planners, or urban designers, or whatever name you prefer to use. I am referring here to people who are design-oriented. Good designs are more than technical solutions to problems; more than a minimization of negative impact or maximization of benefit or resolution of conflict. Good designs are all of these, but, in addition, they are artistic in the fundamental sense of enobling the human spirit. Olmstead is remembered not because he created parks, but because he created great parks. Central Park in New York and the Emerald Neck in Boston are not the fallout of elaborate environmental analyses; they would not have happened if that was all that was going on. They are the products of an artistic genius that goes further and creates, in a very real sense, a value added that is wholly new.

By a different process the landscapes of the 19th century, especially the rural landscapes, were artistic, created very slowly and in small increments. Patterns of land use and styles of structure were moided to native land forms. Landscape designs became indigenous, giving unique identity to landscapes so that you could instantly tell whether you were in France, or England, or Vermont, or Pennsylvania, or Georgia. The natural landscape and climate molded the growth of the built landscape into a tradition of whole. By saving the best they become artistic without perhaps the necessity of genius being involved. Wherever the natural landscape was diverse and supportive of human use, people tended over time to develop a distinctive style of development adapted to that region.

Today, of course, we can more easily move mountains, alter rivers, and control climate. Development is more rapid and usually in large pieces. Our built world sits more rudely upon natural systems, and this, of course, is why we have a greater need for impact analysis, planning, and regulation. This increased power, however, also offers increased opportunities in design. The power to manipulate landscapes can be used constructively in a design sense, design that not only uses the best of nature and keeps harmony between built and natural systems but through manipulation and construction improves the natural systems.

What are the natural science needs of these designers of landscapes? They are found not just in ecology but in a variety of air, water, life, and engineering sciences; one can make a long shopping list of what goes into this subject. Environmental sciences have interfaces as recognized applied sciences with a number of practicing professions. Forest science serves forest management, and fisheries and wildlife biology serve fishery and wildlife management. A variety of animal, plant, and soil sciences serve agriculture. The applied science that is needed to serve landscape design does not exist; not much thought has been given to the subject.

In the past the sciences of horticulture and of landscape planting (which does have some science in it) can be said to have interfaced closely with landscape design. The needs today go far beyond this, a problem obvious to anyone involved in landscape development, management, and design. For today I will call these needs, collectively, the applied science Landscape Ecology.

Applied sciences have several functions. First, they research needs as perceived by practitioners. Medical science, for example, responds to the needs of medical practitioners; medical diagnosis is an art greatly strengthened by the tools of medical science. Second, applied sciences maintain communication with related basic sciences and make use of new developments. We have an example of a failure of this when, in traditional landscape architecture curricula, courses on plant materials and horticulture are taught within the department of landscape architects, not by scientists. From generation to generation contact is lost with the basic sciences and the material becomes out of date. In contrast, applied scientists belong to some of the same professional societies as basic scientists, and they communicate easily back and forth. Third, applied scientists produce new opportunities for practitioners by developing new facets of knowledge in the applied science -that is, they go beyond responding to perceived needs and develop new directions. Last and perhaps the most important, applied scientists maintain links of communication between science and the users of science.

Designers and planners working at the scale of landscapes and regions have had to scrabble for themselves in the literatures of the natural sciences. In fact, they are so accustomed to doing this that they sometimes resent my discussions about the need for an intervening applied science. They are trained to go directly to the basic as well as to various applied sciences (I was hired by the School of Design as a basic ecologist), and have little concept of even the need for an applied science to serve them. They dig for themselves, and in fact they are very poor at it. They are unable to evaluate what they find and tend to assume that something is true if it is published in a scientific journal. They have only very general concepts about what might be useful, or about what is available. Like other kinds of professional practitioners, they need and deserve a lot better support than that.

Landscape ecology, as the applied science for landscape design, inescapably includes the human element. Knowledge of values, institutions, economics, and legislation are part of the environmental design process. Clearly, landscape ecologists (the applied scientists who will be working with designers) must understand these aspects of the systems on which they are doing research. Equally, of course, they must thoroughly understand the professional practice of landscape design.

Much of the content of landscape ecology is obvious. It includes the same array of science, data, and methods that is used in all kinds of environmental analysis, like those that have been

discussed throughout this symposium. Much of this science operates in the problem-solving mode, and of course includes studies of the value systems of various interest groups and studies of institutions that are involved in the implementation of problem solutions. Michael McCarthy was at Oak Ridge for a while. He is a landscape architect with doctoral training in biology. He reviewed a body of environmental science for regional ecological studies related to energy resource development (McCarthy et al. 1976). H. H. Shugart et al. (1978) have examined the potential of several modeling approaches to land-use issues. Altogether, the Regional Environmental Systems Analysis Program (I hope you can find a shorter title) and the Eastern Deciduous Forest Biome Program have produced and organized an enormous amount of information on this subject (and just last night I was given another Oak Ridge manuscript on regional ecology). All of this is not quite the same as the applied science I am talking about, but the two have a very large overlap. In the sense of a group of scientists serving users, one group would probably serve all of these users; too much science is involved for landscape ecology to serve only the needs of landscape designers.

At present, however, these sciences have been developed to serve the needs of impact assessment, and, up front in the planning process, to reduce damage, maximize benefits, optimize allocations, resolve conflicts, and so forth. There has been no expressed attention to what can be done in these same sciences to facilitate the creative aspects of landscape design.

I insist that we should not settle for less than creative landscapes. In earlier times, people had lower living standards than we do, yet they did afford style. If we cannot afford style, why are we doing what we are doing? The minimization of damage and maximization of benefits and all these analytical procedures do not lead to style. They do lead to the best solutions you can get without style, but on top of that we should also be able to get the value added that only artistic creativity can produce. Only artists can do this, not you or I, unless you happen to be both scientist and artist.

How can we serve designers better? Consider, as an example, the phenomenon of species diversity. Let's assume, to avoid argument, that more species of plants and animals are better because that is what people prefer (probably the best argument for diversity that I will accept). What is important and useful about this for the designer to know? The answer depends on scale. At a scale of a hectare or less plants can be made more diverse by planting more kinds; our botanical gardens are marvelous examples of plant diversity achieved entirely by construction. Or, plant diversity can be encouraged by any of several management techniques that allow more and more plant species to occupy a given area of land. In general, if plant form as well as plant species is varied, the area will support more kinds of wildlife. Botanical gardens on vary form as well as species; the larger English gardens support some of the most dense, most diverse populations of breeding songbirds found anywhere in the world.

On a somewhat larger scale, a greater variety of vegetation form is encountered, and vegetation form rather than plant species becomes the major object of manipulation. Instead of going around planting species among species, we think about designing different vegetation forms and, in particular, the edges between forms. Edges are boundaries between different communities of plants and are known to be especially supportive of wildlife. Landscape ecologists could produce a lot of information on how to save edges, create edges, and, in general, manage edges. We have studied edges - you have a man here, J. W. Ranney (1977), doing very interesting work on forest islands and edges - but we study these as existing phenoma rather than as something with design potential. It should be easy, I think, to develop, in the sense of applied research, the science of managing edges.

On a still larger scale, the diversity of species will be strongly influenced by landscape diversity: the variety of land forms, the major vegetation types, wetland types, etc. From a design point of view, emphasis should be on the mix of major land types that exist. Many of these can be saved, modified, or created. The whole of Central Park (if you are familiar with Central Park, you must be aware of its variety and of its many naturalistic features) is entirely created, blasted out of bedrock and built. Nothing there is "natural," yet many natural processes have been coopted to help in the development and maintenance of the park. It behooves the designer to be harmonious with natural processes, even within built systems, if the cost of maintenance is to be kept down. Constitution Plaza in Hartford is an attractive area with a very high maintenance cost, in part because the design is opposed by many natural processes.

What kinds of information are most useful to landscape designers? I have found, in teaching and consulting, that nothing is more useful than an intimate familiarity with the material. By that I mean the local natural history of plants, animals, lakes, streams, soil, etc. Unhappily very few people can learn much about everything in very many regions, and many practitioners do tend to become regionalized by their experience. Even so, this is contradictory. How can a designer with little training in science absorb all of the natural science of a region? Instead, it is the landscape ecologist who needs the intimate familiarity, and the two people need a method of communication.

For several years I have been using an approach that seems to be appreciated not only by designers but by all kinds of people involved in manipulating and managing environments. And it is fun. It is useful in part because in this day and age most of us grow up in cities and lack a rural experience. It is curious that as we have become more powerful in our ability to rebuild the world, on the average we are becoming less familiar with it in terms of life experience.

Studies in natural history tend to emphasize structure, and design is concerned with structure. Yet, it is probably better to understand, manipulate, and work with process than with structure. I've had a lot of fun inducing designers to approach all natural structures as consequences of process, and to ask a series of questions:

1. What forces produced this structure?

2. Do those forces still operate?

3. How can I use them, replace them, or oppose them to create various alternatives?

Here is an example so that you can understand what I mean. It is one that I encountered in northern New Hampshire where a 315-acre lake was scheduled for second-home development. Much of the shoreline of the lake had the form shown in Fig. 1. The lake bottom sloped upward to a flat gravel shoal about three feet below the lake surface. The shore rose abruptly from the shoal to a height two to five feet above the lake. The ridge contained many large rocks and supported spruce trees, sometimes in very dense stands. Farther from the lake, the land surface dropped to just above the lake level where it was wet and swampy. This area and the adjacent hillside was covered with hardwoods.

ORNL-DWG 80-11187 ESD

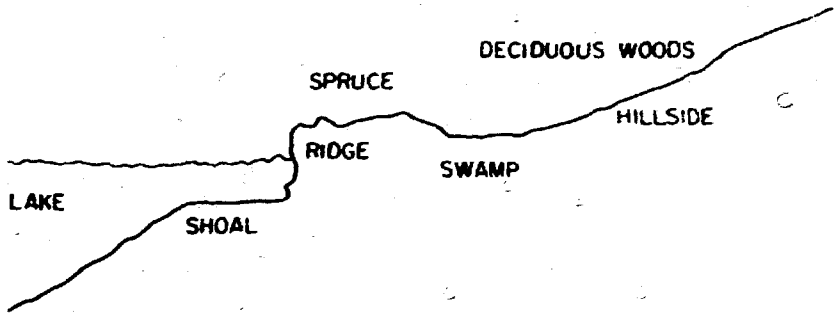

Figure 1. Profile of a lake shore in northern New Hampshire.

The developer's plan was to create the all-purpose shoreline that is found everywhere. Carve back the ridge, fill the swamp, convert both to lawn and scattered trees. Bury the shoal with sloping sand to make a beach. Build houses along the waterfront, with a little wooden dock on pilings sticking out into the water in front of each house.

The present shore is a particularly elegant set of structures. You will not find them in Tennessee; they are indigenous to more northern regions. I asked the site engineer, what process produced this shoreline? He was unable to answer, but reasoned that the forces must have been powerful and they must have happened long ago, because nothing that powerful now disturbs the peaceful lake. Then he noted that some of the trees were tilted - recently. He had never been there during spring melt.

This shoreline tells much. It tells how thick the ice gets in winter: about three feet thick. In the spring it melts around the edge and becomes loose. Then, if a storm comes up, it is moved with enormous force against the shore. Not every year. Some years in one direction and some years in others, but the shore is crushed back again and again. The shoal is a shave line as the ice moves in, and the ridge is the uplifted crushed shore. The shoal may be 5 to 15 feet wide, and the ridge 3 to 100 feet wide, depending on slope, gravel conditions, and prevailing winds.

The raised ridge creates a well-drained microsite, with water never far below, that encourages spruce. From out on the water the ring of spruce is very beautiful. Back of this are hardwoods that, except in summer, would not shield housing from view. In spring the snow melt comes down all over everything, but is stopped at the ridge so that the load of sand and mud is dropped in the swampy area. The water moves laterally to scattered temporary streams that come down the hillside and breach the ridge. Each has a small natural beach at the shore, due to the erosion that is funneled to them.

Thus, the processes producing these structures are still operating. How can they be used? The power involved is ominous, awesome, so that the developer decided not to fight it. His sand would quickly disappear (there is a good general rule about sand for beaches: put sand where sand already exists, otherwise the system will take it away). The little docks on pilings were ridiculous. The sloped lawns would sooner or later be crushed (this had actually happened to me in Michigan: a lakeshore lawn that I built was rolled up like a rug in the spring by ice scarcely 6 inches thick).

Instead we found values in the existing structures. The shoal is a good wading depth, fairly safe for swimming yet deep enough for diving off the larger rocks along the shore. The spruce screen was beautiful. Its maintenance depended on the microsite, a ridge between swamp and lake. The swamp was important as a sediment trap. They decided to keep the ridge as a public right-of-way with a path meandering around the lake. Thus, we have a 100-foot setback of development from the lake, with no argument at all.

I used this as an example because when you get done with it, the whole pattern of development changed. They had been intending to sell high-priced waterfront lots and lower-priced lots on the hillsides. With a public waterfront the quality of land goes back several blocks from the shore; projected profits were not hurt. Stream beaches became foci for small "neighborhood" beaches. A few, shared floating docks were planned that could be taken in in winter. Altogether, the design repercussions of this example affected the entire area of development.

We had more experiences. They had a hillside valley of beaver ponds that we examined in terms of process, and in one part of the lake there was a muddy delta with brush growing on it, built by a stream from another lake, that we had to talk about. In the end these people were running around looking at the landscape and asking all kinds of questions. It was strange, because engineers are trained in process, but they had never been trained to look at the environment as process. To them the environment was structure, to be reshaped.

May Theilgaard Watts (1957) wrote a fascinating little book called Reading the Landscape that uses this approach, a questioning view from which one gradually learns to read landscapes. This kind of knowledge, I insist, is fundamental to achieving excellence in environmental design or management. An organized effort to assemble this kind of knowlege and produce it in usable form for all kinds of landscape users would be very useful. It would be a compendium of ecology, geomorphology, and hydrology, organized around the structures encountered in the environment.

I emphasize organization by structure because designers are visual people. You can talk principles or concepts and they won't hear you or, worse, they will misconstrue your comments. The problem has symmetry; when they talk concepts, I don't hear them either. We communicate much better if we talk structure, and move from structure to process.

Learning as an applied ecologist to be more useful to your user is a difficult subject to get into, yet it is something in which all of us are involved. We are all working with users of science. I find that I need to understand their needs very closely in order to be productive beyond the first easy steps of just organizing information. You can train yourself into a habit of thinking that leads you to suggest additional opportunities to designers, beyond what they are already doing. Let me give an example. Again in New Hampshire, I was asked to consult on the design and construction of a new ski tow and slope. They were very concerned with erosion where the forest was removed. The entire region had reverted to forest. I thought about the erosion problem, but came back suggesting that we design an improved wildlife habitat at the same time as building the ski facility. The two can be done together and at the same time minimize the problem with erosion.

This is where I applied work that Bill Niering and others (1974) have been doing in the arboretum at Connecticut College on the management of vegetation under power lines. When I was young, this vegetation was trimmed by hand. Every few years teams of men would come through and cut the trees, leaving a vegetation that was predominately shrubs. These were excellent areas for blueberries, blackberries, and a variety of wildlife. After the Second World War, aerial spraying with

herbicides became the dominant method of control. This produces a much less useful vegetation, and one that requires frequent treatment. Niering experimented with a combination of techniques. Hand cut the trees, killing the stumps with herbicides. Gradually the shrubs cover the ground so densely that new trees will seldom get started. The mix of junipers, berries, and other shrubs is quasi-stable, and from then on maintenance costs are very low. The end result is a good wildlife habitat, and a good trail system for recreation, with a cost-effective basis such that this technique is now being used over the whole state.

Ski facilities can be treated in similar fashion. Beneath the chairlift, cut and kill the stumps, encouraging brush. Also, as in Bill Niering's system, cut back the trees on the sides to produce a tapered canopy, i.e., the forest canopy is continuous with the shrub canopy. There are two reasons for doing this. First, in the wildlife sense a continuous canopy is a better habitat, especially for birds. Second, if the sides are not tapered, the trees along the sides grow more heavily on the side toward the opening. In four or five years they become so heavy that, with a snow or ice storm, they fall across the tow. This is a common problem in New Hampshire and, of course, occurs in the ski season. Eventually, then, the vegetation under the tow stabilizes, becomes a kind of natural area to look down upon, and the erosion problem is minimized.

For the ski slopes, we know from work at Coweeta that forest can be converted to grass on steep mountain slopes, and erosion is minimal unless the burden of sheep grazing is added. I assume that grass slopes would have to be mowed only once every one or two years to be satisfactory for winter skiing. Except where trails enter and leave, the borders can be converted to shrubs continuous with the forest canopy. Such slopes are excellent habitat for deer grazing and other wildlife. Deer populations are declining in the region because succession has carried almost everything back to forest; open land is becoming scarce in New England.

This offered the designer two sets of functions to play with, a ski facility and wildlife habitat. Putting them together gives a sense of greater accomplishment.

I don't know, as I said earlier, how to develop the habit of thinking around the designer's problem and trying to think of additional opportunities. It is going that extra step. Too often, I have simply responded to the question asked; in this example, it would be setting up nothing more than an impact analysis of erosion. I think that an established applied science helps. If you were really schooled in the profession you could interact and contribute more positively, as scientists commonly do in issues of forest, wildlife, and fisheries management.

At the large scale of regional design, far and away the most important first step is the system of classifying land. It is difficult to stress this too much. Most of the data will be gathered according to that classification. It is also the system that the designer will work with. Designers recognize the components of a classification and manipulate them as elements in design.

For small sites, detailed descriptions of species compositions, etc., are useful. These are not only impractical on a large scale, they are unnecessary. As in all fields of science there is a hierarchy of scale: the larger the scale the coarser the analysis. For very large scales we do not need detailed land-use classifications. A major problem is that different interests look at landscapes differently, and although each of them may use a very simple classification, the base data will have to be gathered around a system satisfactory to all, i.e., able to be aggregated into any simpler form. Working backwards from different interest groups is one way of defining the least detailed system suitable for all.

In the mapping efforts of the Forest Service the classification system seems detailed enough for most uses. Similar efforts on wetlands in the Fish and Wildlife Service are based on a very detailed classification system, probably more detailed than is needed on a regional scale. If, as intended, their data are stored on a hectare basis, we will have enormous amounts of information to work with.

In a team research effort that occupied many of our staff for several years, I was able to work with a classification system aggregated to only six land types in a region of 50,000 hectares: water, wetlands, open natural land, forest, less damaging development, and more damaging development (Smith 1979).

We scientists tend to be type oriented. We classify land by its type. From a design point of view there may be other aspects of land that are just as important, other criteria by which land can be classified. This is especially true where spatial arrangements are concerned. Designers work with space in the area sense and some aspects of these can be classified and mapped. I would like to present some slides showing two examples.

The first, Fig. 2, shows the above six land types for a region including eight towns southeast of Boston. The darkest tone is forest; more damaging development is blank. Each dot represents a hectare. Most of the development is more damaging; this includes industry and commerce, but is mostly residential. Impacts are expected to spread strongly onto adjacent natural land. Less damaging development includes cropland, cemetaries, parks, and golf courses. Open natural land includes pasture, old fields, powerline clearings, etc. In our region these clearings are reasonably good wildlife habitat.

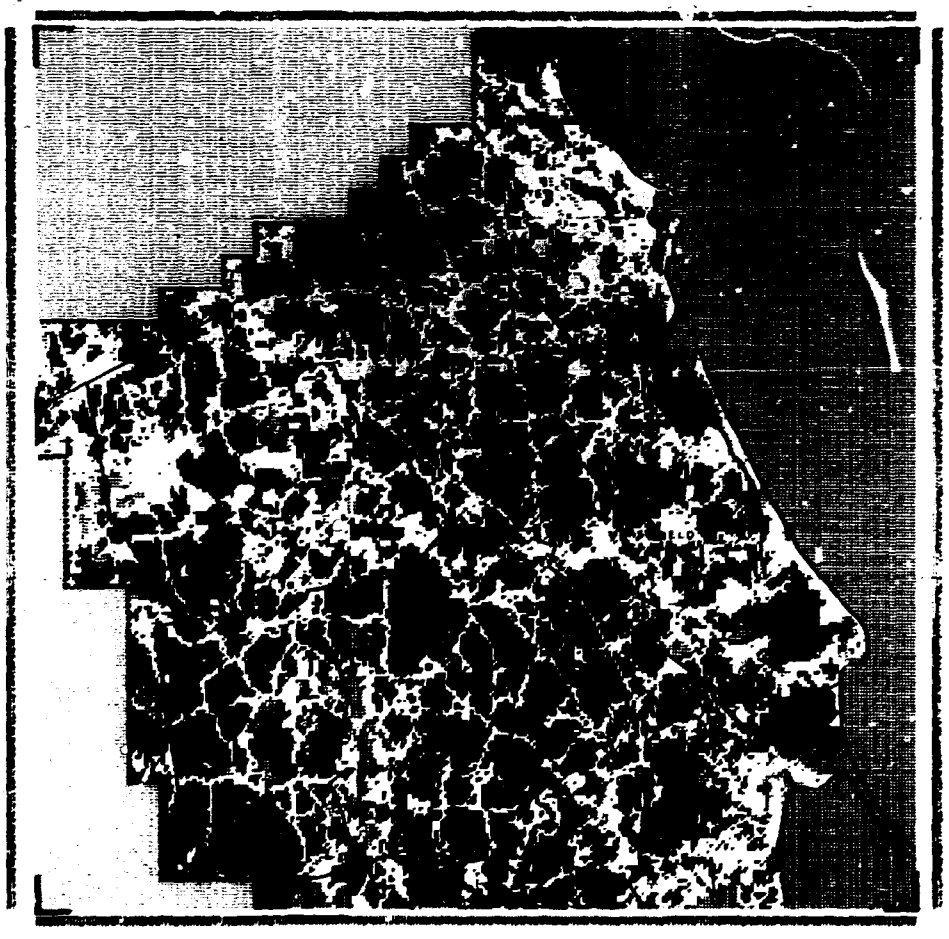

Figure 2. Six landscape types, 1975.

This is a very busy and confusing map, typical of an urbanizing region. Each natural type exists in a variety of patches, with some continuity between patches. It is bewildering from an analytic point of view, especially if one tries to apply or develop a technique of patch analysis. We were not able to come up with any technique for analyzing patches that seemed to work and was economically feasible.

Finally, we sidestepped the issue by using two additional methods for classifying land, both very simple. First, each of the natural types was classified by its distance from the developed types. Four categories were recognized: adjacent to development, or 1, 2, 3 or more hectares removed from development. Figure 3 shows the region mapped by remoteness (blank hectares are developed, the darkest tone is the most remote). The crazy patchwork is resolved into clearly recognizable areas because those hectares adjacent to development are printed in a very pale tone. The darkest hectares, at least 300 meters from the nearest development, were thought to be suitable habitat for creatures that are more shy. If forest, they could be suitable habitat for deer to retire to by day. One half of the total number of natural hectares is adjacent to development, and only one tenth are "remote." We had a projection for 10 years of trend development (what would happen if existing

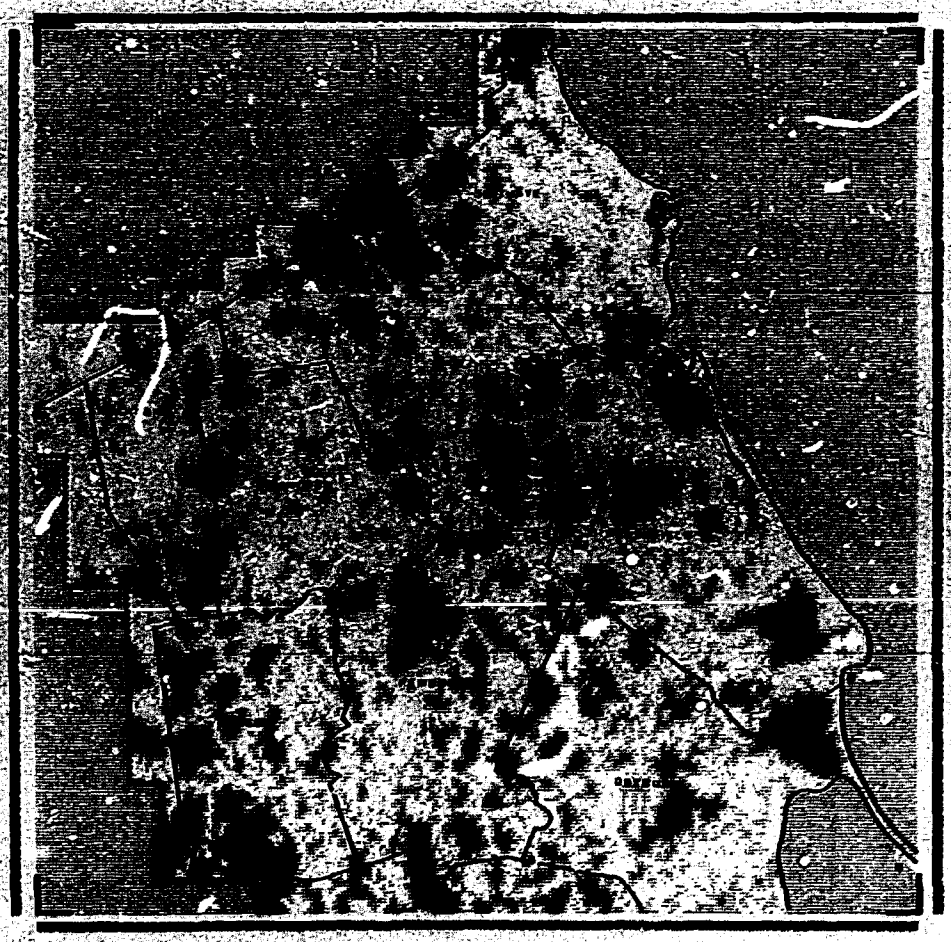

Figure 3. Remoteness, 1975.

policies were implemented and OBERS population projections followed). The number of adjacent hectares remains about the same because development keeps pushing the edge but not obliterating it. The number of remote hectares was cut in half, and it became obvious that remote areas would disappear rapidly unless they were protected by conservation policies.

This map presents a visual pattern to which designers can respond and begin manipulating. What is missing, totally missing, is any kind of natural science associated with remoteness. Wildlife habitat studies are not done with this perspective, although they could be. A lot of research could be done concerning the utility of natural land in terms of its distance from disturbance.

The other land classification has to do with diversity. It is intended partly to locate edges, edges on the scale of hectares, since an edge can be identified only where adjacent hectares have different types. A simple search method from each natural hectare to the eight surrounding hectares turned out to be more efficient than more elaborate searches over more hectares. Figure 4 shows the southeast region classified by diversity. Each hectare not blank is a natural hectare adjacent to a natural hectare of a different type, and not adjacent to more damaging development. The darker tone indicates greater diversity, i.e., a mixture of at least three of the four natural types. It is much easier to look at diversity here than on the original map. This pulls out one feature separately for study. The town line along the northwest part of Marshfield is the North River, an estuary that winds back and forth toward the ocean at the right. Where wetlands and forest meet, dark lines appear. Elsewhere, development interrupts the edge. A reservoir shows at the south-central edge of Pembroke, where water and forest meet. Lakes of equal size farther north do not show because their edges are developed.

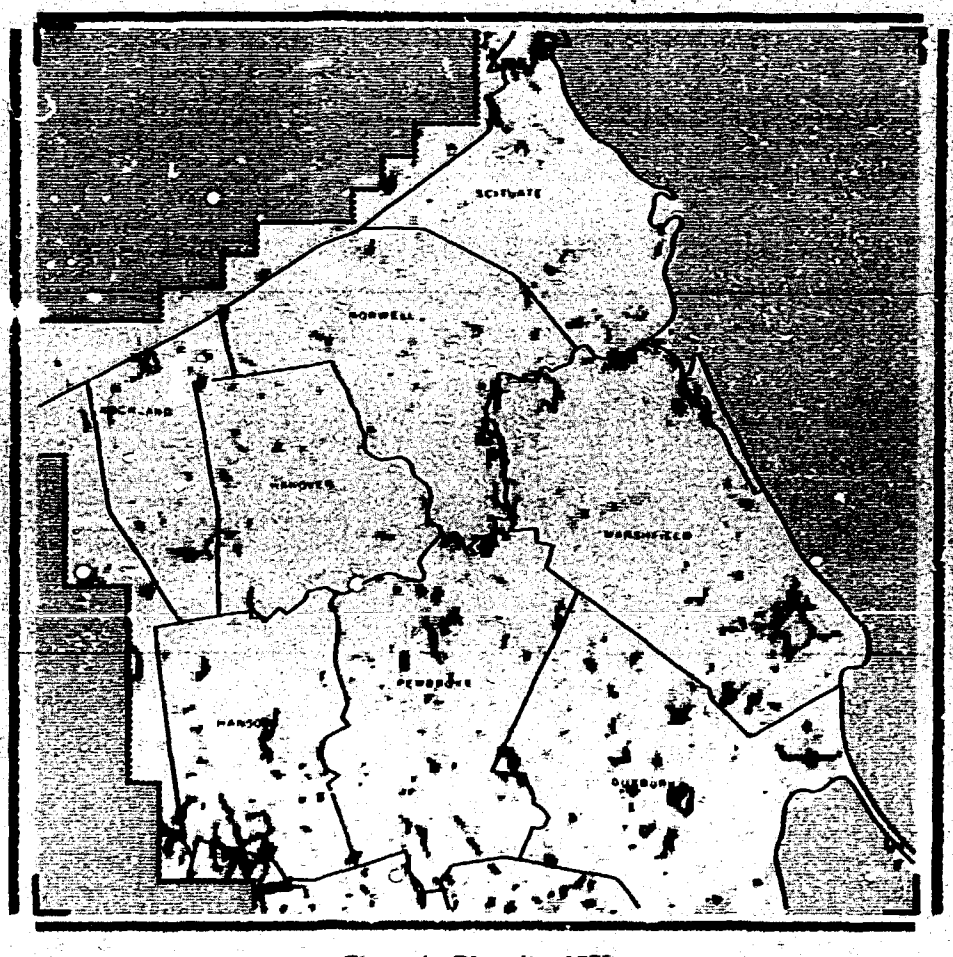

Figure 4. Diversity, 1975.

When we projected land use into the future we included a model of natural succession, much coarser than models being developed here at Oak Ridge. We were using a very coarse classification, and were concerned only when the classification of a hectare changed. Only two events were significant. One is the growth of old fields into forest, and the other is at the end of wetland succession when a shrub swamp grows into a forest. We had 1951 and 1971 vegetation maps to look at, and could clock succession reasonably well. Succession reduces diversity because two relatively scarce types, open land and wetland, are converted into the most common natural type, forest. Also, of course, development obliterates diverse areas. We found that the effects of development and of natural succession were about equal in the reduction of diversity, which was about 40% in 10 years. This altered our view on the problem of diversity. It is not just development that is reducing the quality of the land, but natural processes as well. Concepts of managing or rejuvenating wetlands and open land need to be considered.

A more general aspect of diversity is the composition of a landscape without regard to spatial pattern. Here in TVA country each new reservoir removes some river and some surrounding land. Clearly, in a region without many lakes, the first reservoir adds diversity to the region. But at what point are reservoirs becoming common and rivers scarce? Is one more reservoir going to increase or decrease the diversity of land?

I have played with this in a couple of projects, and find it relatively easy to develop a procedure that helps, if two rules can be accepted. One is: if we consider two land types of equal value per unit area, it is preferable to change part of the more common type into the less common type than vice versa. This puts a value on scarcity. The other is: if we consider two land types that are equally common, it is preferable to change part of the less valued type (per acre) into the more

valued type than vice versa. These two rules lead into a traditional diversity index approach based on a nonlinear system for evaluating quantities of land.

The values attached to unit areas of land types can be specific, such as values placed by hunting interests, or fishing interests, or outdoor recreation interests, or development interests, or water resource interests. Or you can try to generate some very general values that apply to people "in general," because you may not know who the future interest groups may be.

We actually worked with specific interests. For example, with respect to hunting we took survey information on hunting, and rated game species by hunter-days of effort. Then we went to the wildlife biologists and got the environmental needs of those species. Eventually we were able to "map" the hunting interest onto the various land types. Another interest group is the rare and endangered species protected by law. If you have 100 such species, and know what habitat types support each, it is possible to value each type according to its overall importance among the 100 species.

We developed several sets of values for several different kinds of interests in our work on the overall assessment of impacts relating to the proposed Cross Florida Barge Canal.

The diversity approach that I used is very simple and similar to one used in economics. For a given project alternative, convert the total area of each land type to logarithms. Multiply each log by the value assigned for an interest group. Add the products, divide by the sum of the values, and take the antilog. The result is a weighted geometric mean area that increases or decreases in accordance with the two rules given above. We had 13 project alternatives, and thus 13 weighted geometric means for each interest group, easily ranked from best to worst with tie ranks when means were very close.

This function will maximize when the areas of types are proportional to their values. If weights are not used, the mean maximizes when all types are equally common, as with other indices of diversity. Actually, no weights means that all types are of equal value.

Other indices of diversity that biologists are fond of using can be adapted. They behave about the same. This one is easy to compute and has an accepted parallel in economics. None of them have theoretical content in ecology, although some may be borrowed from some other field where they do have such content. They are simply nonlinear systems of counting in which the first unit of a type counts the most, and successive units count less and less.

To return to the issue of reservoirs, we found that the first two reservoirs, already built, had increased the regional diversity of land types, but that the proposed third reservoir would reduce diversity, for several of the interest groups.

I could have talked about many other things. I have said little about values and how to get them. This is involved already in such activities as environmental assessment; as stated earlier they are part of any applied science. I have not mentioned unique landscape features. I presume the best approach is to locate them and protect them, one by one on an ad hoc basis.

I have said little about ecological theory, and this is not accidental. For one thing such theory does not communicate well to designers and planners. More important, however, I am doubtful that very much ecological theory is directly implementable. To be sure, the landscape ecologist will work with a considerable body of theory, much of which is identical to that in basic science as with any applied science. There will be some additional theory concerned with faceting that particular applied science to its users. But in the day-to-day interaction with designers, theory is better put in the background, and attention focused on process and form in the environment.

Landscape ecology has yet to take form, as has the kind of regional ecology that is being developed at Oak Ridge. It should not be left out. The needs of designers are somewhat different from those of other user groups. As you continue developing a regional ecology, consider a full spectrum of users and somehow develop intimate interactions with all of them, especially designers. Thank you.

References Cited

McCarthy, M. M., D. E. Reichle, R. P. Betson, M. R. Patterson, H. H. Shugart, K. R. Dixon, D. D. Huff, J. R. Hyndman, W. C. Johnson, J. T. Kitchings III, B. D. Murphy, and D. C. West
1976. Regional Ecological Studies. ORNL/RUS-24. Oak Ridge National Laboratory, Oak Ridge, Tennessee.

Niering, William A., and Richard H. Goodwin
1974. Creation of relatively stable shrublands with herbicides: Arresting 'succession' on rights-of-way and pastureland. Ecology 55:784-795.

Ranney, J. Warren
1977. Forest island edges: Their structure, development, and importance to regional forest ecosystem dynamics. EDFB/IPB-77/1. Oak Ridge National Laboratory, Oak Ridge, Tennessee.

Shugart, H. H., J. M. Klopatek, and W. R. Emanuel
1977. Developments in ecology in systems analysis and land-use planning. ORNL/TM-6009. Oak Ridge National Laboratory, Oak Ridge, Tennessee.

Smith, Frederick E.
1979. The vegetation wildlife model technical documentation. Landscape Architecture Research Office, Harvard University, Cambridge, Massachusetts.

Watts, May Thielgaard
1957. Reading the Landscape: An Adventure in Ecology. The MacMillan Co., New York.

* * * * *

QUESTIONS AND ANSWERS

S. I. AUERBACH: In listening to the earlier part of your talk, I was taken by your statement how landscape, particularly in the older cultures, was molded by man, and the relationship to a number of what I would tend to call partially value factors. If you think of Europe, you are thinking particularly there of part of the value factors was a labor-intensive and nonenergy-intensive culture that operated throughout certain western European countries. Whereas, in the United States, we, of course, have seen ourselves becoming more and more energy-intensive and non-labor-intensive in our agriculture.

I am wondering whether we should be, or are, facing a change in our agricultural and landscape practices, because, as Frank Parker pointed out, we increasingly need to be concerned about conservation of water and its related energy costs. What triggered this thought was a conservation with a plant ecologist in Canada who had gone into private landscaping business, and was very successful around Montreal in getting subdivision developers and small homeowners to shift their lawns and gardens into natural assembleges of self-maintaining plants. They are interested in getting away from flower gardens and grasses that require energy inputs in the form of fertilizer and repetitive watering. I do not know what will be required to induce such a change in the United States, but that shift seemed to relate to some of the points you made. Would you comment?

F. E. SMITH: I think the real change in this country comes about with not just the energy-intensive but the scale of machinery that has gone with it, especially in recent times. Also, of course, the French rural landscape is becoming very scarce. Large areas of France look just like Iowa and really have no identity.

G. M. VAN DYNE: I don't know much about landscape ecology as a field or discipline or how one develops a discipline. But, in trying to generalize from the examples you use, it seems that people are already available, plant and animal ecologists. Here you are dealing with a very simple plant ecological problem involving soil, water, and vegetation. Why do you need a new discipline?

F. E. SMITH: I don't consider it a new discipline. I don't think of wildlife biology as a new discipline over animal biology. It's a particular application of it and in the process the wildlife biologist knows a lot about wildlife management which is something the animal biologist doesn't know. That is the difference. Of course, also he is more involved with the content of related fields in management theory and policy. No, I think a book of this kind of stuff could be easily produced as a compendium although it would take some skill to present it in a form that is not going to be misunderstood. It would also take some skill to select out things that are really useful and not just a shopping list. That requires familiarity with design or, even in this case, developers of any kind. First of all, I guess I should express my prejudices. I go to meetings where there are whole discussions about ecology and land-use problems and the word design never comes up. I've gone to symposia of the Ecological Society of American and they were going to solve all the problems of the world and they don't even recognize any role for design in the landscape. What I see is settling for a style-less world and I object. I want style. The problems around it aren't so awful that we have to give up style. At least, that's the way I feel about it.

G. M. VAN DYNE: Here is one more analogy to get into one of the applied fields. Consider range management. In the textbooks there are chapters called measuring or evaluating range condition and trend. It's exactly what you're putting forth here in measuring the structure and the process -- condition is structure; trend is process.

F. E. SMITH: I think our preceding generations were much more habituated to that approach to landscape. It takes a lack of familiarity with nature to begin to look at it as something static.

J. S. OLSON: Stan's comment reminds me of May Watts' second book on "Reading the Landscape of Europe" which, of course, goes strongly into this artistic tradition. She was primarily an artist; but I will hereby nominate her also as kind of "godmother of systems ecology." I'll explain what I mean -- including my own personal connection, but also something more.

May Watts did happen to be that "teacher's teacher" at the Morton Arboretum who inspired me, as a high school freshman, to become an ecologist; she also introduced me to the outlook of Henry Cowles and to ecological literature. Now Cowles' work preceded, and indeed later became corrupted somewhat in, the more widely written Clementsian tradition. A dogma became imposed upon early flexible ideas of succession or change which May Watts had grown up with -- early in the twentieth century. Her influence led to my going to the university and taking geology degrees before finishing in ecology, and looking for common threads in both fields.

But May Watts, in turn, was directly a student of George Fuller and both were proteges of Henry Cowles. I would nominate him as some kind of "great grandfather." His role comes down in many ways, involving physical as well as biological sciences. At least one mathematical concept related to George's and Bernie's talks is not often remembered. There is a sentence, I believe in Cowles' dissertation in 1899, that talks about the process of succession not being as rigid as in twentieth century textbooks: Cowles started talking about succession as "a variable approaching a variable rather than a constant." This latter variable is simply the asymptotic condition being approached by the transient state that changes over time. And it is changes of the asymptote (as well as the transients) varying in space that represents the pattern of landscapes. The mountain building and the glaciers and other agents left the initial pattern. The analysis, by field trips and so on as you lead your own students, of what this landscape legacy of the earth sciences means will lead us to is a backdrop for connecting system science to the great outdoors.

((ANSWER: There's a surprising amount of geomorphology. F.E.S.))

Also Pleistocene geology and paleoclimatology. But we have, in one sense then, a connection of the asymptotic condition and system stability considerations -- going right back through this somewhat artistic treatment of pattern and the other disciplines of the earth sciences. Of course, geography too is a classic synthesis, with succession having come on in the 1890s as a kind of treatment of the transients of the states of the perturbed system back toward a stable pattern: the "climax." More than Clements, however, Cowles and especially another geologist, William Cooper, conceived succession as a more general process of change, now well simulated by the latest models of systems ecology.

There are two other connections that lead back from the earth sciences specifically to current global system studies. Cowles was a kind of displaced geology graduate himself who gave credit to T. C. Chamberlin for a lot of scientific reasoning, e.g., the famous method of multiple working hypotheses. Chamberlin, of course, comes back to us today as we treat global ecological considerations of climatic change. His theory of carbon dioxide as one of many factors regulating climate change is now ready for closer scrutiny using system models. That's one connection with this Division's new research.

There's another more specific connection that also dates back to earth sciences, and that is the mathematics of geochemical models that were developing well by the mid-1950s, a little bit before most of the George's charts.

((ANSWER: I was taught that subject in the 1940s; my notebook is full; Hutchinson had it all. F.E.S.))

Right, and he cited a lot of the source literature; but, as I recall, most of those models were essentially invoking the steady state assumptions to calculate coefficients, e.g., by Craig and others during the first Geneva conferences on Atoms for Peace. But it was essentially the treating of the transients rather than just the steady states that helped to motivate Bob Neel's thesis here and a lot of the other publications on models by the early 1960s. We simulated radiocarbon transfers before the big thermonuclear tests preceding the atmospheric test ban treaty. First, pool sizes of biomass were treated as carriers, modeled as changing quantities rather than as static reservoirs to which tracers were merely added and spread around. Then the quantities of material, element by element, per unit of mass were modeled for food chains and landscape movements of pollutants -- now the stock in trade for assessments of fallout and of effluent pollutants from industry.

So, connecting George's talk and yours, I think that there are indeed some threads of connection leading to systems ecology, dating back through the history of science. The earth sciences come back first through ecology's underlying disciplines of physical science, ultimately including the differential equations for rates of change, with or without a steady state being approached at any locality. Second, geology and geography offered motivation for some of the ecological -- and artistic -- elements, with explicit attention to pattern of meaningful variation on the landscape. Such a rich down-to-earth background for systems ecology seems to provide the foundation for the sort of applied professional aspect of "ecological design" which you teach.

F. E. SMITH: I think if I see a need for another kind of an applied scientist, it really reflects the increases in specialization that follow more knowledge in a more complex society. In the last century the people who were doing ecology were familiar with a whole lot of other things, and people could work together much more easily than we can today. Nowadays, after we have mastered a large burden of technical training and gone off to work among other people who think like us, we find ourselves more isolated from other specialties. I've often thought it was ironic that the environmental crisis came upon us at a time when ecology had become an abstract theoretical subject in basic biology that knew very little about people, and the engineers of the world had for the first time grown up without a common rural background. I think the confrontations in the early days of the environmental movement were a sharing of ignorance as much as a sharing of knowledge.

CLOSING

S. I. AUERBACH

Thank you, Fred.

Well, this brings us to the close of the dedication of this facility. Today we have had, among the four speakers, the rare privilege of hearing almost a century of accumulated professional experience in the area of environment. I want to thank each of our speakers personally for bringing together today what was for me a very stimulating set of lectures.

Finally, I want to thank all of these gentlemen for giving us a very, very, marvelous two days.

ORNL-5666
Distribution Category - UC-11

INTERNAL DISTRIBUTION

1. S. M. Adams
2. Carol P. Allen
3. Regina M. Anderson
4-53. S. I. Auerbach
54. J. A. Auxier
55. Brenda L. Baber
56. C. F. Bates III
57. L. W. Barnthouse
58. Ella J. Berven
59. T. J. Blasing
60. B. G. Blaylock
61. W. J. Boegly, Jr.
62. Mary Anne Bogle
63. E. A. Bondietti
64. Brenda Bradburn
65. D. M. Bradburn
66. A. S. Bradshaw
67. J. N. Brantley
68. F. S. Brinkley
69. M. G. Browman
70. Donna K. Brown
71. R. L. Burgess
72. G. F. Cada
73. R. E. Canning
74. Glenda R. Carter
75. S. W. Christensen
76. Jan M. Coe
77. C. C. Coutant
78. K. E. Cowser
79. D. K. Cox
80. R. B. Craig
81. R. J. Crawford
82. Linda I. Croff
83. Janet H. Cushman
84. R. M. Cushman
85. N. H. Cutshall
86. E. C. Davis
87. D. L. DeAngelis
88. Debbie F. Dickerson
89. G. N. Duvic
90. M. E. Dyer
91. G. K. Eddleman
92. N. T. Edwards
93. J. W. Elwood
94. W. R. Emanuel
95. C. D. Farmer
96. M. P. Farrell
97. N. D. Farrow
98. R. B. Fitts
99. R. Floran
100. Jenny L. Forte
101. C. W. Francis
102. Marilyn L. Frank
103. W. Fulkerson
104. R. H. Gardner
105. C. T. Garten
106. C. W. Gehrs
107. J. M. Giddings
108. J. W. Gooch
109. S. B. Gough
110. Cynthia T. Gregory
111. R. A. Griesemer
112. N. A. Griffith
113. C. S. Hawe
114. Susan K. Hall
115. T. G. Hallam
116. Anne S. Hammons
117. Carolyn L. Henley
118. Polly L. Henry
119. S. E. Herbes
120. R. F. Hibbs
121. S. G. Hildebrand
122. Karen L. Holbrook
123. C. C. Hopkins
124. Elaine Huber
125. D. D. Huff
126. A. E. Hunley
127. G. R. Jasny
128. Linda J. Jennings
129. D. W. Johnson
130. J. W. Johnston
131. J. R. Jones
132. R. G. Jordan
133. Paul Kanciruk
134. Susan F. Kames
135. S. V. Kaye
136. Bernadette L. Kirk
137. J. T. Kitchings
138. J. M. Klopatek
139. R. L. Kroodsma
140. J. R. Krummel
141. Deva Kumar
142. W. C. Kyker
143. I. L. Larsen
144. Shirley G. Lawson
145. S. Y. Lee
146. S. E. Lindberg
147. Linda W. Littleton
148. J. M. Loar
149. P. Lotts
150. R. S. Lowrie
151. Philip Lowry
152. R. J. Luxmoore
153. B. K. Lyon
154. Linda K. Mann
155. J. S. Mattice
156. J. F. McBrayer
157. R. K. McConathy
158. Lana K. McDonald
159. S. R. McLaughlin
160. P. B. McLean
161. L. E. McNeese
162. N. T. Millemann
163. R. E. Millemann
164. Ruby Miller
165. Mary S. Moran
166. P. J. Mulholland
167. I. M. Munro
168. Virginia G. Myers
169. J. D. Newbold
170. Martha K. Nungesser
171. Kathleen M. Oakes
172. T. W. Oakes
173. T. T. Odell
174. J. S. Olson
175. R. J. Olson
176. Elizabeth G. O'Neill
177. R. B. O'Neill
178. C. J. Parks
179. Patricia D. Parr
180. Thelma G. Patton
181. H. A. Pfuderer
182. Cheryl B. Phillips
183. R. E. Phillips
184. J. J. Pinapar
185. Sylvia Porter
186. W. M. Post
187. H. Postma
188. C. D. Powers
189. J. W. Ranney
190. R. M. Reed
191. D. E. Reichle
192. Donna D. Rhew
193. C. R. Richmond
194. R. D. Roop
195. E. H. Rosenzalm
196. N. W. Rosenthal
197. Monte Ross-Todd
198. W. K. Roy
199. Martha S. Sale
200. F. S. Sanders
201. Joanne S. Sanford
202. C. M. Sealand
203. W. J. Selvidge
204. M. H. Shanks
205. Fran Sharples
206. D. S. Shriner
207. H. H. Shugart
208. W. D. Shults
209. Lorene L. Sigal
210. P. T. Singley
211. A. M. Solomon
212. Jean Solomon
213. G. R. Southworth
214. B. F. Spalding
215. R. W. Stark
216. Mary P. Stockbury
217. J. D. Story
218. S. H. Stow
219. R. H. Strand
220. L. E. Stratton
221. R. F. Strayer
222. L. M. Stubbs
223. G. W. Suter
224. T. Tamura
225. Fred G. Taylor, Jr.
226. George Taylor
227. D. E. Todd, Jr.
228. Virginia R. Tolbert
229. J. R. Trabalka
230. D. B. Trauger
231. S. C. Tsai
232. Carolyn S. Tucker
233. L. E. Tucker
234. R. R. Turner
235. R. I. Van Hook
236. W. Van Winkle, Jr.
237. P. R. Vanstrum
238. Jim Vath
239. D. S. Vaughan
240. Nancy Vaughan
241. L. D. Voorhees
242. J. B. Waide
243. Barbara T. Walton
244. Sherry Ward
245. Julia A. Watts
246. J. W. Webb
247. D. C. West
248. Becky S. Williams
249. H. W. Wilson
250. Lynn L. Wright
251. G. T. Yeh
252. A. Zucker
253. Biology Library
254-255. Central Research Library
256. ESD Library
257-258. Laboratory Records Dept.
259. Laboratory Records, ORNL-RC
260. ORNL Patent Office
261. ORNL Y-12 Technical Library

EXTERNAL DISTRIBUTION

262. Edward L. Alpen, Associate Director, Biology and Medicine Division, Lawrence Berkeley Laboratory, Berkeley, CA 94720
263. C. C. Amundsen, University of Tennessee, Ecology, 408 Tenth Street, Knoxville, TN 37916
264. David S. Ballantine, Office of Health and Environmental Research, Department of Energy, Washington, DC 20545
265. Ronald L. Ballard, U.S. Nuclear Regulatory Commission, Washington, DC 20555
266. Burton V. Barnes, Department of Forestry, School of Natural Resources, University of Michigan, Ann Arbor, MI 48109
267. Nathaniel F. Barr, Office of Health and Environmental Research, Department of Energy, Washington, DC 20545
268. Robert N. Beck, Director, Franklin McLean Memorial Research Institute, 950 East 59th Street, Chicago, IL 60637
269. Beverly J. Berger, Director of Biomass Energy Systems Branch, Department of Energy, 600 E Street, N.W., Washington, DC 20585
270. W. R. Bibb, Research Division, Department of Energy, Oak Ridge Operations, Oak Ridge, TN 37830
271. Charles W. Billups, Environmental Specialists Branch, Division of Site Safety and Environmental Analysis, U.S. Nuclear Regulatory Commission, Washington, DC 20555
272. Juan A. Bonnet, Jr., Center for Energy and Environmental Research, University of Puerto Rico, Caparra Heights Station, San Juan, PR 00935
273. Donald Borg, Chairman, Medical Department, Brookhaven National Laboratory, Upton, NY 11973
274. J. Lehr Brisbin, Savannah River Ecology Laboratory, Savannah River Plant, Drawer E, Aiken, SC 29801
275. R. W. Brocksen, Manager, Ecological Programs, Electric Power Research Institute, P.O. Box 10412, Palo Alto, CA 94303
276. Robert E. Buckmann, Forest Service, U.S. Department of Agriculture, Room 3007, South Agricultural Bldg., Washington, DC 20013

277. J. D. Buffington, Council on Environmental Quality, 722 Jackson Place, NW, Washington, DC 20006
278. W. W. Burr, Office of Health and Environmental Research, Department of Energy, Washington, DC 20545
279. Elton J. Cairns, Associate Director, Energy and Environment Division, Lawrence Berkeley Laboratory, Berkeley, CA 94720
280. J. Cairns, Center for Environmental Studies, Virginia Polytechnic Institute and State University, Blacksburg, VA 24061
281. J. Thomas Callahan, Associate Director, Ecosystems Studies Program, National Science Foundation, Washington, DC 20550
282. J. E. Cantlon, Vice President for Research and Graduate Studies, Michigan State University, East Lansing, MI 48823
283. Eloise E. Clark, Directorate for Biological Behavioral, and Social Sciences, National Science Foundation, 1800 G. Street, NW, Washington, DC 20550
284. Ruth C. Clusen, Assistant Secretary for Environment, Department of Energy, 20 Massachusetts Avenue, Washington, DC 20545
285. Dale W. Cole, College of Forest Resources, University of Washington, Seattle, WA 98105
286. J. L. Cooley, Institute of Ecology, University of Georgia, Athens, GA 30601
287. W. J. Coppoc, Texaco, Inc., P.O. Box 509, Beacon, NY 12508
288. E. B. Cowling, Department of Plant Pathology, Box 5397, North Carolina State University, Raleigh, NC 27607
289. T. V. Crawford, Environmental Sciences Section, Savannah River Laboratory, Aiken, SC 29801
290. F. L. Culler, Electric Power Research Institute, Palo Alto, CA 94304
291. James W. Curlin, Deputy Assistant Secretary, Land and Water Resources, U.S. Department of the Interior, Office of the Secretary, Room 6618, Main Interior Bldg., Washington, DC 20240
292. C. E. Cushing, Ecosystems Department, Battelle-Northwest Laboratories, Richland, WA 99352
293. R. C. Dahlman, Office of Health and Environmental Research, Department of Energy, Washington, DC 20545
294. J. J. Davis, Division of Safeguards, Fuel Cycle, and Environmental Research, U.S. Nuclear Regulatory Commission, Washington, DC 20555
295. S. N. Davis, Head, Department of Hydrology and Water Resources, University of Arizona, Tucson, AZ 85721
296. R. N. Denny, Executive Director, The Wildlife Society, 2101 Wisconsin Avenue, N.W., Suite 611, Washington, DC 20014
297. Harvey Drucker, Manager, Biology Department, Battelle-Pacific Northwest Laboratory, P.O. Box 999, Richland, WA 99352
298. Paul B. Dunaway, Director, Transuranics Office, Nevada Operations Office, Department of Energy, P.O. Box 14100, Las Vegas, NV 89114
299. D. W. Duttweiller, Southeast Environmental Research Laboratory, Environmental Protection Agency, College Station Road, Athens, GA 30605
300. Charles W. Edington, Office of Health and Environmental Research, Department of Energy, Washington, DC 20545
301. Charles E. Elderkin, Manager, Atmospheric Sciences Department, Battelle-Pacific Northwest Laboratory, P.O. Box 999, Richland, WA 99352
302. V. A. Fassel, Deputy Director, Ames Laboratory, Iowa State University, Ames, IA 50010
303. W. E. Fassler, Oak Ridge Associated Universities, Oak Ridge, TN 37830
304. Jerry F. Franklin, Forestry Science Laboratory, Oregon State University, P.O. Box 887, Corvallis, OR 97731
305. David Freeman, Tennessee Valley Authority, Knoxville, TN 37902
306. David Friedman, Hazardous Waste Management Division (WH-565), Office of Solid Waste, U.S. Environmental Protection Agency, 401 M Street, S.W., Washington, DC 20460
307. Al A. Galli, U.S. Environmental Protection Agency, Mail Code R.D. 682, 401 M Street, S.W., Washington, DC 20460
308. R. N. Gerrels, University of South Florida, Department of Marine Sciences, 830 First Street, South, St. Petersburg, FL 33701
309. Vernon C. Gilbert, National History Division, National Park Service, Washington, DC 20240
310. Norman R. Glass, National Ecological Research Laboratory, U.S. Environmental Protection Agency, 200 Southwest 35th Street, Corvallis, OR 97330
311. William A. Glass, Manager, Radiological Sciences Department, Battelle-Pacific Northwest Laboratories, P.O. Box 999, Richland, WA 99352
312. Bert Gledhill, Lawrence Livermore Laboratory, P.O. Box 808, Livermore, CA 94550
313. Marvin Goldman, Director, Radiobiology Laboratory, University of California, School of Veterinary Medicine, Davis, CA 95616
314. David Goldstein, Department of Radiation and Biophysics, University of Rochester, School of Medicine and Dentistry, 260 Crittenden Boulevard, Rochester, NY 14642
315. Robert A. Goldstein, Electric Power Research Institute, 3412 Hillview Avenue, P.O. Box 10412, Palo Alto, CA 94304
316. Frank Golley, National Science Foundation, Washington, DC 20550
317. Fred Goulding, Head, Department of Instrument Techniques, Lawrence Berkeley Laboratory, Berkeley, CA 94720
318. Douglas Grahn, Director, Biological and Medical Research Division, Argonne National Laboratory, 9700 South Cass Avenue, Argonne, IL 60439
319. George Grimes, Hydroelectric Resources, Resource Applications, Department of Energy, 12th and Pennsylvania Avenue, N.W., Washington, DC 20461
320. P. F. Gustafson, Radiological Physics Division, D-203, Argonne National Laboratory, 9700 S. Cass Avenue, Argonne, IL 60439
321. Eric J. Hall, College of Physicians and Surgeons, Columbia University, 630 W. 168th Street, New York, NY 10032
322. D. Heyward Hamilton, Office of Health and Environmental Research, Department of Energy, Washington, DC 20545
323. Leonard Hamilton, Department of Energy and Environment, Brookhaven National Laboratory, Upton, NY 11973
324. W. F. Harris, Program Director, Ecosystem Studies Program, National Science Foundation, Washington, DC 20550
325. R. J. Hart, Department of Energy, Oak Ridge Operations, Oak Ridge, TN 37830
326. Fred Hatch, Lawrence Livermore Laboratory, P.O. Box 808, Livermore, CA 94550
327. Larry Headley, Chief, Biomedical and Environmental Research Branch, Morgantown Energy Technology Center, P.O. Box 880, Morgantown, WV 26505
328. Allen Hecht, Climate Dynamics Program, National Science Foundation, Washington, DC 20550
329. Robert Herbst, Department of Interior, 18th and C Street, NW, Washington, DC 20240
330. Walter Herndon, Vice Chancellor for Academic Affairs, 517 Andy Holt Tower, University of Tennessee, Knoxville, TN 37916
331. Harvey Herschman, Laboratory of Nuclear Medicine and Radiation Biology, University of California, 900 Veteran Avenue, Los Angeles, CA 90024
332. J. H. Hill, Deputy Manager, Department of Energy, Oak Ridge Operations, Oak Ridge, TN 37830
333. Allen Hirsch, Office of Research and Development, Environmental Protection Agency, 401 M Street, NW, Washington, DC 20460
334. Joan Hock, Regional Assessments Division, Office of Technology Impacts, Department of Energy, Washington, DC 20545
335. Hal Hollister, Office of Assistant Secretary of Environment, Department of Energy, Washington, DC 20545
336. F. F. Hooper, School of Natural Resources, The University of Michigan, Ann Arbor, MI 48106
337. Peter House, Office of Technology Impacts, Department of Energy, Washington, DC 20545
338. Henry Howden, Biology Department, Carleton University, Colonel By Drive, Ottawa, Ontario, Canada
339. Boyd Hutchinson, Atmospheric Turbulence and Diffusion Laboratory, 465 S. Illinois Ave., Oak Ridge, TN 37830
340. Norb Jaworski, Environmental Research Laboratory-Duluth, 6201 Congdon Blvd., Duluth, MN 55804
341. R. M. Jenkins, National Reservoir Research Program, U.S. Fish and Wildlife Service, Fayetteville, AR 72701
342. LeMar Johnson, Idaho National Engineering Laboratory, EG&G, Idaho, P.O. Box 1625, Idaho Falls, ID 83415

343. Philip L. Johnson, Oak Ridge Associated University, Oak Ridge, TN 37830
344. Hershel T. Jones, Acting Assistant Director for Operation, Materials and Components, Division of Coal Gases and Liquids, Department of Energy, 400 1st Street, Room 501, Washington, DC 20545
345. Donald King, Man and the Biosphere Program, U.S. Department of State, ashington, DC 20520
346. Jerry R. Kline, Division of Site Safety and Environmental Analysis, U.S. Nuclear Regulatory Commission, Washington, DC 20555
347. George H. Lauff, W. K. Kellogg Biological Station, Michigan State University, Hickory Corners, MI 49060
348. J. A. Lenhard, Assistant Manager for Research & Development, Department of Energy, Oak Ridge Operations, Oak Ridge, TN 37830
349. S. A. Levin, Ecology and Systematics Department, Cornell University, Ithaca, NY 14850
350. J. L. Liverman, Senior Vice President, Litton Biomedics, Rockville, MD 20852
351. Ronald Lohding, Program Manager, Environmental Programs, Los Alamos Scientific Laboratory, P.O. Box 1663, Los Alamos, NM 87545
352. Ronald R. Lucas, Chief, Environmental Studies Branch, Division of Geothermal Energy, Department of Energy, Washington, DC 20545
353. Orie Loucks, The Institute of Ecology, Butler University, Indianapolis, IN 46208
354. O. R. Lunt, Environmental Radiation Division, Laboratory of Nuclear Medicine and Radiation, University of California, 900 Veteran Avenue, Los Angeles, CA 90024
355. Michael C. MacCracken, MAPS5 Project Director, Lawrence Livermore Laboratory, P.O. Box 808, Livermore, CA 94550
356. Lester Machta, Director, Air Resources Laboratory, National Oceanic Atmospheric Administration, 8060 13th Street, Silver Spring, MD 20910.
357. C. R. Malone, National Academy of Sciences, 2101 Constitution Avenue, NW, Washington, DC 20418
358. Bernard Manowitz, Chairman, Department of Energy and Environment, Brookhaven National Laboratory, Upton, NY 11973
359. Sidney Marks, Environmental Health and Safety Research, Battelle-Pacific Northwest Laboratory, P.O. Box 999, Richland, WA 99352
360. R. P. Marshall, Battelle-Pacific Northwest Laboratory, P.O. Box 999, Richland, WA 99352
361. Robert E. Martin, Department of Biological Sciences, Tennessee Technological University, Cookeville, TN 38501
362. John Maulbetsch, Fossil Fuel Power Plants, Electric Power Research Institute, Palo Alto, CA 94304
363. Helen McCammon, Office of Health and Environmental Research, Ecological Research Division, Department of Energy, Washington, DC 20545
364. Roger O. McClellan, Director, Inhalation Toxicology Research Institute, Lovelace Foundation for Medical Education and Research, P.O. Box 5890, Albuquerque, NM 87115
365. J. Frank McCormick, Director, Graduate Program in Ecology, University of Tennessee, Knoxville, TN 37916
366. Mortimer L. Mendelsohn, Associate Director for Biomedical and Environmental Research, Lawrence Livermore Laboratory, P.O. Box 808, Livermore, CA 94550
367. Edward M. Morimoto, Director, Environmental Sciences Division, Lawrence Livermore Laboratory, P.O. Box 808, Livermore, CA 94550
368. J. Vincent Nabholz, Office of Toxic Substances, Division of Environmental Review, U.S. Environmental Protection Agency, 401 M Street, Washington, DC 20460
369. Daniel Nelson, 116 Morningside Drive, Oak Ridge, TN 37830
370. Erick Nelson, 116 Morningside Drive, Oak Ridge, TN 37830
371. Samuel J. Nelson, 273 McMillan Rd., Grosse Pointe Farms, MI 48236
372. Robert Nestor, Savannah River Laboratory, Aiken, SC 29801
373. J. M. Neuhold, Department of Wildlife Science, Utah State University, UMC-52, Logan, UT 84322
374. E. P. Odum, University of Georgia, Biology Science, Institute of Ecology, Athens, GA 30601
375. Goetz Oertel, Waste Management Division, Department of Energy, Washington, DC 20545
376. W. S. Osburn, Office of Health and Environmental Research, Department of Energy, Washington, DC [illegible]
377. F. L. Parker, College of Engineering, Vanderbilt University, Nashville, TN 37235
378. Ruth Patrick, Academy of Natural Sciences, Department of Limnology, Philadelphia, PA [illegible]
379. Harvey M. Patt, Director, Radiobiology Laboratory, University of California, School of Veterinary Medicine, Davis, CA [illegible]
380. S. C. Patten, Department of Zoology, University of Georgia, Athens, GA [illegible]
381. Ralph Pernac, Electric Power Research Institute, 3412 Hillview Avenue, P.O. Box 10412, Palo Alto, CA [illegible]
382. Paul Pearson, Executive Vice-President, Rutgers University, New Brunswick, NJ 08903
383. Donald Petersen, Acting Division Leader, Life Sciences Division, Los Alamos Scientific Laboratory, P.O. Box 1663, Los Alamos, NM 87545
384. Gerald Petersen, Medical Director, Hanford Environmental Health Foundation, P.O. Box [illegible], Richland, WA [illegible]
385. John Porter, Director, Environmental Sciences Section, Savannah River Laboratory, Aiken, SC 29801
386. Robert Rabin, National Science Foundation, Washington, DC 20550
387. Richard Ragaini, Environmental Sciences Division, Lawrence Livermore Laboratory, P.O. Box 808, Livermore, CA 94550
388. Gerald J. Rausa, Environmental Protection Agency, 401 M Street, NW, Washington, DC 20460
389. J. C. Randolph, Indiana University, Environmental Programs, 400 East 7th Street, Room 416, Bloomington, IN 47401
390. P. R. Reed, Office of Nuclear Regulatory Research, U.S. Nuclear Regulatory Commission, Washington, DC 20555
391. James J. Reisa, Office of Toxic Substances, Division of Environmental Review, 401 M Street, S.W., U.S. Environmental Protection Agency, Washington, DC 20460
392. S. R. Reznek, Acting Deputy Assistant Administrator for Energy, Minerals and Industry, Environmental Protection Agency, Washington, DC 20460
393. T. H. Ripley, Division of Forestry, Fisheries, and Wildlife Development, Tennessee Valley Authority, Norris, TN 37828
394. Paul C. Rosier, Department of Botany and Microbiology, University of Oklahoma at Norman, Norman, OK [illegible]
395. D. M. Robie, Oak Ridge Associated Universities, P.O. Box [illegible], Oak Ridge, TN 37830
396. Ralph M. Rotty, Institute for Energy Analysis, Oak Ridge Associated Universities, Oak Ridge, TN [illegible]
397. Robert E. Rowland, Director, Radiological and Environmental Research Division, Argonne National Laboratory, 9700 South Cass Avenue, Argonne, IL 60439
398. Walt Sanders, Athens Water Quality Laboratory, Environmental Protection Agency, Athens, GA [illegible]
399. Robert Sar Martin, Director, Division of Distributed Solar Technology, Department of Energy, Washington, [illegible]
400. Vincent Schultz, Department of Zoology, Washington State University, Pullman, WA 99164
401. Richard Setlow, Chairman, Biology Department, Brookhaven National Laboratory, Upton, NY [illegible]
402. Rebecca R. Sharitz, Savannah River Ecology Laboratory, Savannah River Plant, Drawer E, Aiken, SC [illegible]
403. S. Shoup, 80 Outer Drive, Oak Ridge, TN 37830
404. Davis Slade, Office of Health and Environmental Research, Department of Energy, Washington, [illegible]
405. Frederick E. Smith, Graduate School, Harvard University, Cambridge, MA [illegible]
406. Farwell Smith, Hydroelectric Resources, Conservation Applications, Department of Energy, [illegible] Washington, DC 20461

407. Michael H. Smith, Savannah River Ecology Laboratory, Savannah River Plant, Drawer E, Aiken, SC 29801
408. Robert Leo Smith, Forestry Department, West Virginia University, Morgantown, WV 26506
409. Gerald A. Soffen, Director of Life Sciences Division, NASA, Federal Bldg. No. 6, 600 Maryland Avenue, SW, Washington, DC 20546
410. R. J. Stern, Director, Division of NEPA Affairs, Department of Energy, 4G064 Forrestal Building, Washington, DC 20545
411. Barbara Strehlow, 116 Morningside Drive, Oak Ridge, TN 37830
412. E. G. Struxness, 126 Carnegie Drive, Oak Ridge, TN 37830
413. Wayne T. Swank, Coweeta Hydrologic Laboratory, P.O. Box 601, Franklin, NC 28734
414. Jeff Swinebroad, Department of Energy, 1000 Independence Avenue, Washington, DC 20585
415. J. T. Tanner, Rt. 28, Box 144, Knoxville, TN 37920
416. Laurence Tilley, Center for Energy and Environmental Research, University of Puerto Rico, Caparra Heights Station, San Juan, PR 00935
417. John R. Totter, Institute for Energy Analysis, Oak Ridge Associated Universities, P.O. Box 117, Oak Ridge, TN 37830
418. G. M. Van Dyne, College of Forestry and Natural Resources, Colorado State University, Ft. Collins, CO 80521
419. Burt Vaughan, Battelle-Pacific Northwest Laboratory, Richland, WA 99352
420. George Voelz, Division Leader, Health Research Division, Los Alamos Scientific Laboratory, P.O. Box 1663, Los Alamos, NM 87545
421. Herbert L. Volchok, Acting Director, Environmental Measurements Laboratory, U.S. Department of Energy, 376 Hudson Street, New York, NY 10014
422. R. H. Waring, Department of Forest Science, Oregon State University, Corvallis, OR 97331
423. Robert Watters, Office of Health and Environmental Research, Department of Energy, Washington, DC 20545
424. A. M. Weinberg, Institute for Energy Analysis, Oak Ridge Associated Universities, Oak Ridge, TN 37830
425. William K. Willard, Tennessee Technological University, Cookeville, TN 38501
426. M. M. Williamson, Director, Radiological and Environmental Sciences Laboratory, Department of Energy, Idaho Operations Office, 550 2nd Street, Idaho Falls, ID 83401
427. Kenneth E. Wilzbach, Chemistry Division, Argonne National Laboratory, 9700 South Cass Avenue, Argonne, IL 60439
428. Robert W. Wood, Office of Health and Environmental Research, Department of Energy, Washington, DC 20545
429. G. M. Woodwell, Marine Biological Laboratory, Woods Hole, MA 02543
430. E. McDonald Wrenn, Director, Radiobiology Project, University of Utah, College of Medicine, Salt Lake City, UT 84132
431. C. L. Yarbro, Research Division, Department of Energy, Oak Ridge Operations, Oak Ridge, TN 37830
432. W. C. Yee, Division of Environmental Planning, Office of Natural Resources, TVA, 375 401 Building, Chattanooga, TN 37401
433. Office of Assistant Manager for Energy Research and Development, Department of Energy, Oak Ridge Operations Office, Oak Ridge, TN 37830

434-657. Given distribution as shown in DOE/TIC-4500 under category UC-11.

*U.S. GOVERNMENT PRINTING OFFICE 1980-640-246/272