PNL-4384 Ex. Sum.
UC-11

EXECUTIVE SUMMARY

An Analysis of Methods and Models for Assessing the Direct and Indirect Economic Impacts of CO_2-Induced Environmental Changes in the Agricultural Sector of the U.S. Economy

J. M. Callaway

August 1982

Prepared for the U.S. Department of Energy
under Contract DE-AC06-76RLO 1830

Pacific Northwest Laboratory
Operated for the U.S. Department of Energy
by Battelle Memorial Institute

Battelle

PNL-4384 Ex. Sum.

DISCLAIMER

This report was prepared as an account of work sponsored by an agency of the United States Government. Neither the United States Government nor any agency thereof, nor any of their employees, makes any warranty, express or implied, or assumes any legal liability or responsibility for the accuracy, completeness, or usefulness of any information, apparatus, product, or process disclosed, or represents that its use would not infringe privately owned rights. Reference herein to any specific commercial product, process, or service by trade name, trademark, manufacturer, or otherwise, does not necessarily constitute or imply its endorsement, recommendation, or favoring by the United States Government or any agency thereof. The views and opinions of authors expressed herein do not necessarily state or reflect those of the United States Government or any agency thereof.

PACIFIC NORTHWEST LABORATORY
operated by
BATTELLE
for the
UNITED STATES DEPARTMENT OF ENERGY
under Contract DE-AC06-76RLO 1830

Printed in the United States of America
Available from
National Technical Information Service
United States Department of Commerce
5285 Port Royal Road
Springfield, Virginia 22151

NTIS Price Codes
Microfiche A01

Printed Copy

Pages	Price Codes
001-025	A02
026-050	A03
051-075	A04
076-100	A05
101-125	A06
126-150	A07
151-175	A08
176-200	A09
201-225	A010
226-250	A011
251-275	A012
276-300	A013

3 3679 00059 2867

PNL-4384 Ex. Sum.
UC-11

AN ANALYSIS OF METHODS AND MODELS FOR ASSESSING THE DIRECT AND INDIRECT ECONOMIC IMPACTS OF CO_2-INDUCED ENVIRONMENTAL CHANGES IN THE AGRICULTURAL SECTOR OF THE U.S. ECONOMY

EXECUTIVE SUMMARY

J.M. Callaway

August 1982

Prepared for
the U.S. Department of Energy
under Contract DE-AC06-76RLO 1830

Pacific Northwest Laboratory
Richland, Washington 99352

EXECUTIVE SUMMARY

INTRODUCTION

This research was conducted by the Pacific Northwest Laboratory (PNL) for the Division of Carbon Dioxide Research within the Office of Basic Energy Sciences, U.S. Department of Energy (DOE). The overall purpose of this research was to assist DOE in developing methods for assessing the direct and indirect economic impacts due to the effect of increases in the ambient concentration of CO_2 on agricultural production. Specifically, the primary objectives were:

- To determine what economic methods and models have been developed or need to be developed to assess the direct and indirect economic impacts of CO_2-induced environmental changes in the agricultural sector of the U.S. economy.
- To provide information and recommendations which will enhance DOE's efforts to assess the direct and indirect economic impacts associated with CO_2 buildup, not only as they relate to the agricultural sector, but to other sectors of the U.S. economy as well.

It has been estimated that, prior to the industrial revolution, the concentration of CO_2 in the earth's atmosphere was about 290 parts per million by volume (ppmv). By 1980, the ambient concentration of CO_2 had risen to around 338 ppmv and is currently increasing at a rate of about 1.5 ppmv per year. Estimates of the future rate of growth of ambient CO_2 vary widely; however, most experts agree that it will take about 50 to 100 years for the concentration of CO_2 in the atmosphere to double. Scientists predict that an increase in CO_2 of this magnitude will produce a greenhouse effect leading to a significant rise in global temperatures and to potentially dramatic alterations in regional climatic conditions. Potential impacts of CO_2-induced climate change that have been cited to date include the creation of draught-prone regions in North America and Central Asia, melting of the West Antartic ice sheet, and the opening of the Northwest Passage due to the melting of the Arctic Ocean.

Partly in response to concerns raised about these potential problems, Congress passed, and the President signed into law, P.L. 95-367, the National Climate Program Act of 1978. This act established a national program designed to "assist the nation and the world to understand and respond to natural and man-induced processes and their implications." This was to be accomplished through a broadly-based, multi-agency research program in which DOE was assigned the lead agency role for conducting CO_2-related research and impact assessments. The research reported in this document was undertaken as a part of DOE's Carbon Dioxide Research Program. It represents a first step in examining alternative methods for quantifying the economic impacts associated with future increases in the ambient concentration of CO_2.

Outline of Research Steps

Efforts to satisfy the objectives of this research initially gave rise to the following set of questions:

- In what different kinds of ways could CO_2 buildup affect existing relationships between the environment and agricultural production?
- Given the impact of CO_2 in the environment what are the possible direct and indirect economic impacts that could occur?
- What types of methods will be required to simulate the different kinds of environmental and economic impacts that could occur as a result of CO_2 buildup?

Several tasks were required to find answers to these questions. First, a literature search was undertaken, both to gain a better understanding of the ways in which CO_2 buildup could affect crop growth and to identify the different methods available for assessing the impacts of CO_2-induced environmental changes on crop yields. The second task of this research involved identifying the scope of both the direct and indirect economic impacts that could occur as a result of CO_2-induced changes in crop yields. The third task then consisted of a comprehensive literature search to identify what types of economic models could be used effectively to assess the kinds of direct and indirect economic impacts that could conceivably occur as a result of CO_2 buildup. Specific attention was focused upon: 1) national and

multi-regional agricultural sector models, 2) multi-country agricultural trade models, and 3) macroeconomic models of the U.S. economy. The fourth and final task of this research involved synthesizing the information gathered in the previous tasks into a systematic framework for assessing the direct and indirect economic impacts of CO_2-induced environmental changes related to agricultural production.

CO_2 AND THE ECONOMICS OF ENVIRONMENTAL CHANGE IN AGRICULTURE

Whatever economic impacts occur in the U.S. due to CO_2 buildup will be the result of a complex set of processes involving interactions between the natural and physical environments and the forces which shape the behavior of producers and consumers in both agricultural and nonagricultural markets. The broad framework in which these interactions will occur is illustrated in Figure 1. The linkages portrayed in this diagram among CO_2, the environment and the economic systems within the U.S. and other nations in the world have been simplified for explanatory purposes. Nevertheless, by examining the interactions and feedbacks among the various components of the system shown in Figure 1, one can gain insights about the potential (not the actual) scope of the economic impacts that could be caused by CO_2 buildup. This, in turn, will shed light on the types of models and methods that will be required to assess these impacts.

Environmental Effects of CO_2 on Crop Yields

The term "environmental effects," as used in this report, refers to the broad range of impacts that changes in the ambient concentration of CO_2 may have on the physical and natural environments in which the production of commercial crops takes place. The impacts of these changes on crop yields have been classified in this report as either first- or second-order effects. The relevant distinction between the two is that first-order effects are transmitted directly from the physical environment to crop yields, whereas second-order effects involve the intervening influence of changes in the abundance of agricultural pests (i.e., weeds, insects and plant diseases).

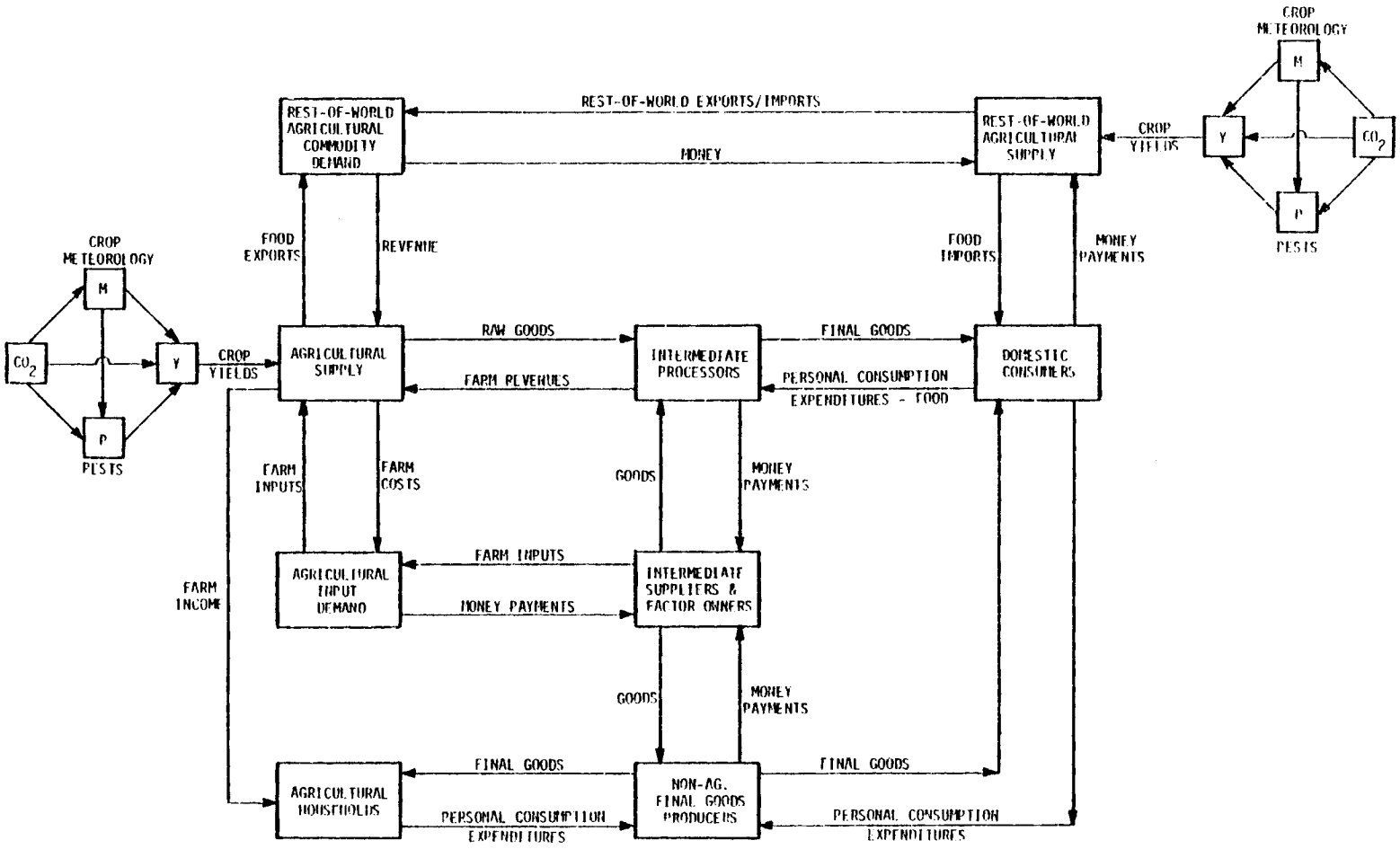

FIGURE 1. Schematic Diagram of Linkages Among CO_2, the Environment and Relevant Portions of the U.S. and Rest-of-World Economic Systems

The relationship between these two types of impacts is illustrated at the far left (and the upper right) of Figure 1 by means of a simple path diagram which shows the causal connections among CO_2, meteorological conditions (M), agricultural pests (P) and crop yields (Y).

First-Order Effects

First order effects shown in Figure 1 include:

- The impact of CO_2 buildup on crop yields due to increased photosynthetic activity in commercial crops, as illustrated by the path $CO_2 \rightarrow Y$.
- The effect of CO_2 buildup on crop yields due to changes in climate, as shown by the path $CO_2 \rightarrow M \rightarrow Y$.

Second-Order Effects

Second-order effects shown in Figure 1 include:

- The impact of CO_2 buildup on crop-weed competition due to differential increases in the photosynthetic activity of plants and weeds, as illustrated by the path $CO_2 \rightarrow P \rightarrow Y$.
- The impact of CO_2 buildup on crop yields due to climatically induced changes in the abundance of weeds, insects and plant diseases, as shown by the path $CO_2 \rightarrow M \rightarrow P \rightarrow Y$.

POTENTIAL ECONOMIC PACTS OF CO_2-INDUCED ENVIRONMENTAL CHANGES

The potential effects of CO_2-induced changes in crop yields on the U.S. economy are classified in this report as direct economic impacts, indirect economic impacts and economic impacts from foreign trade. Direct economic impacts refer to the possible effects of CO_2 buildup on agricultural commodity markets, while indirect economic impacts refer to changes in economic activity that could be transmitted to nonagricultural markets through the interindustry linkage structure of the U.S. economy. Finally, economic impacts from foreign trade refer to any changes in economic activity within

the U.S. that could occur as a result of the effects of CO_2 buildup on agricultural production in other nations of the world which engage in agricultural commodity trade.

Direct Economic Impacts

An exogenous change in the yield of a crop has the potential to affect the relationship between the market price of that commodity and the amount of output that the firm would be willing to produce at that price. Any such change in the agricultural supply function of a firm would have the likely effect of altering the relative profitability of growing different crops. Individual producers would then have an incentive to alter their production decisions accordingly, resulting in changes in the level and mix of commodity flows from the agricultural sector to food processing industries and consumers, and to changes in the revenues received by farmers from these sectors. These impacts are illustrated in Figure 1 by the arrows showing the exchange of goods for money between the supply-side of the U.S. agricultural sector and food processing industries and consumers.

Changes in the production mix of firms in response to CO_2-induced yield changes also have the potential to affect on-farm demands for land, labor, capital and other inputs which farmers need to grow their crops. Switching to different crops will also affect the costs of production due to changes in the mix of inputs required to grow crops and, if the input demands of a large number of firms are affected, changes in the prices of these inputs. These impacts are illustrated in Figure 1 by the arrows showing the flow of inputs and money between factor owners and intermediate supplying industries and the agricultural sector in the U.S.

Any change in the revenues of farmers or their production and capital costs has the potential to affect farm profits. This impact is shown in Figure 1 by the flow of income from the supply side of the agricultural sector to farm households. Finally, any change in farm income will affect the consumption of final goods and services by farm households. This is illustrated in Figure 1 by the arrows indicating the flow of goods and money between farm households and final goods industries in the economy.

The impacts outlined above are not specific to CO_2 buildup. They represent a fairly general set of responses that would be associated with changes in the state of the environment due to any number of different factors. However, at least two factors set the environmental impacts of CO_2 apart from those with which farmers are usually concerned, namely:

- The effects of CO_2 buildup will occur gradually over a long period of time.
- The effects of CO_2 on the environment will be widely and unevenly distributed across the U.S., creating the potential for long-term shifts in the geographic distribution of agricultural production.

Indirect Economic Impacts

No single sector of the economy is entirely self-sufficient. The agricultural sector is no exception. Figure 1 illustrates some of the linkages that exist between the agricultural sector and other sectors of the economy. Forward linkages connect the agricultural sector to industries which purchase its products directly--food processors, wholesalers and retailers of food products. Backward linkages connect the agricultural sector to factor owners and intermediate industries, which provide farmers with production inputs, and to final goods industries, which produce goods and services for final consumption. The agricultural sector is also tied indirectly to many other industries in the economy through the forward and backward linkages that emanate from the industries to which it is directly linked.

Consequently, changes that occur in the agricultural sector due to the effects of CO_2--or from any exogenous source for that matter--have the potential to affect the prices, output levels, and income earned by producers in a great many other industries which are tied either directly or indirectly to the agricultural sector through the money and product flows illustrated in Figure 1. Furthermore, changes that occur in the price of food and non-food personal consumption goods as a result of the impacts that are transmitted through the interindustry linkage structure of the economy also have the potential to cause changes in the expenditure and consumption patterns and welfare of consumers.

Impacts from Foreign Trade

CO_2 buildup is a global phenomenon which has the potential to affect agricultural production in other nations of the world, as well as the U.S. This is illustrated in Figure 1 by the path diagram showing the impacts of CO_2-induced environmental changes on crop yields in other nations of the world. Because agricultural producers in the U.S. compete in major world markets with producers in many other nations, CO_2-induced changes in the environment which affect agricultural supply relationships in any one notion may, in turn, affect world prices and the flow of agricultural commodities and money payments between many nations.

In the U.S., this might mean changes in the level and mix of agricultural exports and the revenues received by domestic producers from the sale of their products in world markets. This is illustrated in Figure 1 by the arrows showing the flow of goods and money between the supply-side of the U.S. agricultural sector and the rest-of-world. Changes in world food prices that may occur as a result of CO_2 buildup on a global basis could also affect the demands of U.S. consumers for food products from abroad. This is illustrated in Figure 1 by the arrows showing the flow of goods and money between U.S. consumers and the rest of the world. (The flow of goods and money between the rest-of-world and U.S. food processors is not shown, however these flows could also be affected.)

Changes in U.S. exports and imports of agricultural commodities could directly affect the competitive position of U.S. agriculture and the balance of payments, either for better or worse. In addition, the initial impacts of these changes on agricultural producers and consumers in the U.S. would then be transmitted back through the economy via forward and backward linkages, creating the potential for still further changes in the flow of goods and services in exchange for money between many different sectors of the U.S. economy.

Implications for Model Development

At this time there is insufficient information to determine which of the various types of impacts described above will occur, or to what extent.

However, an examination of the potential scope of the impacts that could occur as a result of CO_2 buildup represents a fundmentally important step in determining what types of capabilities should be built into the models used to assess these impacts. These include:

- The ability to determine how changes in the ambient concentration will affect crop yields on a regional basis through the full array of first- and second-order environmental effects.
- The ability to assess the impacts of CO_2 buildup on the geographic distribution of agricultural production.
- The ability to assess the impacts of CO_2 buildup on the interindustry flow of goods and services through the economy.
- The ability to assess the impacts of CO_2 buildup in other nations of the world on the U.S. agricultural sector and world trade.

METHODS FOR ASSESSING THE IMPACTS OF CO_2-INDUCED ENVIRONMENTAL CHANGES ON CROP YIELDS

Three different methods for quantifying the impacts of CO_2-induced environmental changes on crop yields were examined for this report. These methods included:

- Panel survey approach
- Statistical crop yield models
- Crop simulation models

These methods were selected for analysis based on their ability to provide crop yield forecasts for a number of different crops in a multi-regional setting. The major features of these three different approaches for forecasting crop yields are shown in Table 1. A brief, generic description of each of these methods follows below.

Panel Survey Method

The panel survey method relies upon expert judgements about how percentage changes in the values of key meteorological variables (i.e., average growing season, temperature and precipitation) from existing norms will

TABLE 1. Summary of Crop Yield Model Characteristics

Characteristics	Model Types		
	Panel Survey	Statistical	Simulation
Scope of Environmental Effects	First-order climate effects	First-order climate effects	First-order climate effects with potential to cover all first- and second-order effects
Geographic Resolution	Flexible	State or multi-state	Individual field; however field-level forecasts can be viewed as being "representative" of larger, homogenous regions
Input Data for Simulation	Average growing season values for temperature and precipitation	Varies from model to model; usually includes monthly values for temperature, precipitation and evapotranspiration	Daily values for precipitation, temperature, solar radiation, and sometimes evapotranspiration, plus initial field values for soil moisture, row spacing and plant population
Model Outputs	Change in crop yield, by crop, by region	Change in crop yield, by crop, by region (different models required for each region)	Change in crop yield, by crop, by region (same model can be used in different regions)
Accuracy of Forecasts	Difficult to validate, but generally fair to good	Good to excellent under normal weather conditions; fair to poor for extreme weather conditions	Excellent to poor, depending on individual model
Compatibility of Information Flows With Climate Models	Excellent, due to the flexibility of this approach	Good-some spatial reaggregation of climate forecasts will be required to create regional consistency between the models	Poor-extensive disaggregation of climate forecasts from a seasonal to a daily basis will be required
Compatibility of Information Flows With Agricultural Sector Models	Excellent, due to the flexibility of this approach	Technically compatible; however the accuracy of yield forecasts may be poor if common regions in the two types of models are not actually homogenous with respect to crop conditions	Technically compatible if the "representative field" concept is used. However losses in accuracy may occur if common regions in the two types of models are not actually homogenous

affect the yields of different crops in different regions. This information can be used to construct a model that relates the distribution of crop yields to the joint distribution of meteorological variables for each region-crop combination of interest. Next, regional forecasts for the future values of these meteorological variables are obtained from either climate models or the expert judgements of a panel of climatologists. These forecasts are then applied to the statistical model to simulate the effect of future climatic changes on regional crop yields.

Statistical Crop Yield Models

Statistical yield models consist of either a single equation or a recursive system of equations which relate the yield of a crop, usually in a specific region, to a set of meteorological variables, such as monthly precipitation and temperature. The parameters of these models are then estimated using multivariable regression analysis in conjunction with either historical and/or experimental data on crop yields and meteorological variables. The effect of climatic change on the yield of a crop in a given region can then be simulated by inserting the forecast values for the meteorological variables into the model and solving for the value of crop yield.

Crop Simulation Models

Crop simulation models attempt to mimic the physical, chemical and physiological mechanisms underlying plant growth processes specific to individual crops by means of a complex set of differential equations. The parameters of these models are based on biological theory and experimental evidence about the relationships governing the plant growth processes contained in the structure of the model. The effects of climate change on the yield of a specific crop can be determined by inserting forecast values for the "driver" variables (which usually include average daily precipitation, temperature and solar radiation from planting to harvesting) and simulating the relevant growth of the crop on a daily basis in response to these conditions. Some models can also simulate the impacts of changes in the ambient concentration of CO_2 in the plant micro-climate on photosynthesis.

However, existing models by and large are not designed to simulate plant-pest interactions, although features that permit this can be built into many of these models with additional research.

Model Selection

Because the focus of the research was primarily on economic models, no effort was made to assess the particular strengths and weaknesses of all of the many different individual statistical crop yield and crop simulation models that are currently in use. Nevertheless, it is clear that crop simulation models represent the only systematic method for increasing the full range of first- and second-order environmental impacts on crop yields. However, extensive long-term research will be required to improve the accuracy of these models and to develop the structural features required to simulate all of these different types of impacts.

METHODS FOR ASSESSING THE DIRECT ECONOMIC IMPACTS OF CO_2- INDUCED CHANGES IN THE ENVIRONMENT

This report examined three different types of agricultural sector models that can be used to assess the direct economic impacts of CO_2-induced environmental changes on the agricultural sector. These methods included:

- Positive (econometric) models
- Normative (mathematical programming) models
- Agricultural trade models.

This report focused specifically on multi-regional models of the U.S. agricultural sector. National models were rejected because geographic variations in the effects of CO_2 on the environment have the potential to influence the geographic distribution of agricultural commodity production in the U.S. National models cannot be used to assess the magnitude of these shifts. A brief overview of the types of models that can be used to evaluate the potential impacts of CO_2 buildup on the geographic distribution of agricultural commodity production in the U.S. on a world-wide basis follows.

Econometric Models

These models contain separate equations for each region which relate the acreage, yield and production of each crop to relevant explanatory variables. Export and domestic demands for individual crops are determined by separate equations at the national level, and the regional supply of each crop is related to these demands through a market-clearing identity. The parameters of the regional supply and national demand equations are estimated using advanced multivariant regression techniques in conjunction with historical and cross-sectional data. Econometric models are widely used in short-term forecasting. However, these models are less accurate in long-term forecasting since the parameters in them reflect current technology and consumer tastes, which can be expected to change over long periods of time. Forecasts of the direct economic impacts of CO_2-induced yield changes can be made by inserting the region-crop yield values obtained from a crop yield model into the yield equations of the agricultural sector model used in the assessment.

Normative Models

Normative models show how farmers should behave collectively in order to achieve a specific economic objective, whereas positive models are designed to show how producers actually behave. Since the "optimal" behavior of farmers cannot be observed directly, the accuracy of the forecasts provided by these models cannot be validated. However, these types of models are frequently used to make long-term projections of economic activity in the agricultural sector.

The normative models reviewed in this report are based on farm-level, linear programming (LP) models. As such, they contain 1) an objective function which defines the economic objectives that farmers pursue; 2) a technology matrix that describes the relationship between input use and crop production, and 3) a set of constraints on these resources. However, unlike farm-level LP models in which commodity prices are fixed, these models contain features which permit the simultaneous determination of prices and output for agricultural commodities in many different regions. Forecasts of the direct economic impacts of CO_2-induced yield changes can be made using the same methods described for econometric models.

Agricultural Trade Models

Agricultural trade models can be designed using either the econometric or normative approach to agricultural sector modeling. These models consist of individual, price endogenous agricultural sector models for different world regions. The submodels for each world region are linked together through a system of commodity-specific market clearing identities, relating world supply to world demand. The effects of CO_2-induced yield changes in specific nations on agricultural commodity trade can be simulated by inserting the yield forecasts obtained from country-specific crop yield models into the relevant supply equations of the agricultural trade model used in the assessment.

Model Selection

Table 2 shows the relevant structural features of the three models selected to evaluate the direct economic impacts of CO_2-induced yield changes on the U.S. agricultural sector and on U.S. agricultural commodity trade. Specific models chosen included:

- AGSIM - a multi-regional econometric model of the U.S. agricultural sector, versions of which are now held by the U.S. Environmental Protection Agency (EPA) and Texas A&M University.
- ISU/NRE National Regional Linear Programming Model (CARD Tatonnement) - a large multi-regional, price-endogenous mathematical programming model developed jointly by the U.S. Department of Agriculture and the Center for Agricultural and Rural Development at Iowa State University.
- Grain, Oilseed and Livestock Model (GOL) - an econometric world trade model, developed by the U.S. Department of Agriculture.

METHODS FOR ASSESSING THE INDIRECT ECONOMIC IMPACTS OF CO_2-INDUCED CHANGES IN THE ENVIRONMENT

This report surveyed four different types of models that can be used to assess the indirect economic impacts that could be transmitted from the

TABLE 2. Summary of Model Features for AGSIM, CARD Tatonnement and GOL Models

Characteristics	Model		
	AGSIM	CARD Tatonnement	GOL
Type of Model	Multi-regional econometric model of U.S. agricultural sector	Multi-regional mathematical programming model of U.S. agricultural sector with features for simultaneous output/price determination	Multi-regional econometric model of world agricultural commodity trade
Dynamic Features	Acreage equations contain lagged price and/or acreage variables for dynamic simulation	Cannot simulate CO_2-related impacts over time	Cannot simulate CO_2-related impacts over time
Regional Disaggregation	13 production regions in the U.S.: national demands	105 production regions in the U.S., 28 demand regions	28 world supply and demand regions
Commodity Disaggregation	Wheat, barley, oats, grain sorghum, cotton, corn soybeans, and livestock	Wheat, barley, oats, sorghum, corn, hay, cotton, soybeans and livestock	Wheat, rice, course grains, oilseed meal, dairy products, eggs, and livestock
Inputs from Crop Yield Models	(a) Region/crop-specific yields, or (b) Re-estimate yield equations using meteorological variables	Region/crop-specific yields	(a) Region/crop-specific yields, or (b) Re-estimate yield equations using meteorological variables
Model Outputs			
Welfare Measures	Consumer and producer surplus (profit), farm income-by region	Consumer and producer surplus (profit), farm income-by region	Consumer surplus, export income, import payments--by world region
Commodity Production and Prices	Yes-for all crops and livestock, by region	Yes-for all crops and livestock, by region	Yes-for all crops and livestock, by region
Input Use	Acreage planted and/or harvested by crop and region	Acreage planted and/or harvested, water, fertilizer energy by fuel, and soil loss by crop and region	None
Accuracy of Forecasts	Good in short-term applications; questionable in long-term applications, since model parameters are estimated empirically	Accuracy cannot be validated; model was constructed for long-term economic assessments	Unknown-model has only been used for long-term economic assessments; however, accuracy is questionable, since model parameters are estimated empirically

agricultural sector to other sectors of the U.S. economy. These methods included:

- Input-output models
- Input-output based econometric models
- Normative general equilibrium models
- Multi-regional econometric models.

A brief description of the major features of each of these types of models follows below.

Input-Output Models

These models are based on input-output tables which show the flow of goods and services within the economy between primary suppliers, composed of households and other factor owners, intermediate industries, which consist of firms that exchange unfinished goods between one another for further processing and/or final sale, and final purchasers who buy the goods and services produced by intermediate industries for final consumption. Elementary matrix algebra is used to manipulate portions of this table in order to derive multipliers which show how a change in the final demand for the goods and services produced by one intermediate industry will affect the gross output of other industries in the economy. These models can be used to simulate the indirect economic impacts of CO_2 buildup by applying these impact multipliers to the changes in the final demand for agricultural commodities predicted by either AGSIM or the CARD model.

Input-Output Based Econometric Models

These models contain the same basic interindustry transactions table that is the heart of conventional input-output models. However, industry demands for primary resources and consumer demands for final goods and services, which are exogenous to input-output models, are related functionally to relevant explanatory variables through econometrically estimated demand functions. The indirect economic impacts of CO_2 buildup can be simulated with these models by setting the relevant agricultural commodity prices in the final demand equations of the model equal to the values predicted by either AGSIM or the CARD model, and then simulating the impacts of these price changes on the rest of the economy.

Normative General Equilibrium (NGE) Models

Neither input-output nor input-output based econometric models provide results that are fully consistent with a competitive, general equilibrium solution to the economy-wide resource allocation problem. NGE models are non-linear mathematical programming models which not only contain the same basic interindustry detail as do input-output models, but which also provide optional solutions that are consistent with a competitive general equilibrium. Since prices and quantities in all markets are determined simultaneously within NGE models, the indirect economic impacts of CO_2 buildup can be simulated by constraining agricultural commodity output, consumption and prices in the model at the values predicted by either AGSIM or the CARD model.

Multi-Regional Econometric Models

Multi-regional econometric models are designed to predict the regional economic consequences associated with changes in the national demand for regionally produced goods and services. These models can be used in conjunction with the industry output information obtained from agricultural sector models and macroeconomic models of the national economy to forecast how CO_2-induced changes in the national output of both agricultural and nonagricultural industries will affect industry output, investment and employment and unemployment and population on a region-by-region basis.

Model Selection

Input-output models were rejected as a viable means of assessing the indirect economic impacts of CO_2-induced environmental changes transmitted through the agricultural sector because their use in impact analysis is predicated on the assumption that interactions between markets are based mainly on technological considerations. Based on a review of the remaining models, the following specific models were selected as the best available tools for assessing the indirect economic impacts of CO_2 buildup:

- Battelle Forecasting System (FORSYS) - an input-output based econometric model of the U.S. economy developed by Battelle Memorial Institute.

- Metropolitan and State Regions Model (MASTER) - a multi-regional econometric model developed by the Pacific Northwest Laboratory for the U.S. Department of Energy.

Table 3 summarizes the relevant features of these two models, along with those that could be incorporated within the framework of a normative general equilibrium model of the U.S. economy. While no such model currently exists, it is believed that a normative model of this type would be useful in the analysis because it is better-suited than an input-output based econometric model for assessing the full capacity of the economy to adjust to the potential changes that may occur within the agricultural sector as a result of CO_2 buildup.

STRATEGIES FOR ASSESSING THE ECONOMIC IMPACTS OF CO_2-INDUCED CHANGES IN THE ENVIRONMENT

There are two basic obstacles that stand in the way of providing accurate forecasts about the potential economic impacts of CO_2 buildup. The first of these is that state-of-the-art climate models cannot be validated empirically. Consequently, the accuracy of the forecasts provided by these models cannot be determined statistically in the same manner that this can be done for the forecasts generated by statistical yield models and crop simulation models. The second obstacle is that economic models cannot, in general, predict future changes in technology and consumer preferences, nor the impact of these changes on the way in which producers and consumers adjust to CO_2 buildup. Thus, the accuracy of the long-range forecasts produced by both agricultural sector models and microeconomic models will be extremely difficult to defend. If economic assessments are to be performed, a way of using economic models to shed light on the potential impacts of CO_2 buildup must be found as a substitute for making precise predictions of future economic conditions 50 to 100 years or more from the present. There are at least two possible alternatives for doing this, each of which can be viewed as a different research, or forcasting, strategy.

TABLE 3. Summary of Model Features for FORSYS, MASTER and Proposed Normative General Equilibrium (NGE) Model

Characteristics	Model		
	FORSYS	NGE	MASTER
Type of Model	National, input-output based econometric model	Non-linear, mathematical programming model of the national economy	Multi-regional econometric model
Dynamic Features	Sectoral investment and capital stock are determined recursively, allowing dynamic simulation	None	Sectoral output, commercial and residential construction activity, employment and wage rates are all determined using lagged variables, allowing dynamic simulation
Regional Disaggregation	None	None	268 Standard Metropolitan Statistical Areas (SMSAs) and 48 non-SMSA state regions
Inputs from other Economic Models	Nationally aggregated agricultural commodity prices and output from agricultural sector model	Nationally aggregated agricultural commodity prices and output from agricultural sector model	(a) Gross output by industry from national macro-model (b) Gross agricultural output from agricultural sector model
Model Outputs	Consumption and prices for final goods (54 sectors) GNP and aggregate price level Sectoral output and price indexes (107 sectors) Sectoral investment and capital stock (100 sectors) Sectoral employment, productivity and wages (107 sectors) Unemployment Personal and disposable income Sectoral energy consumption (107 sectors)	Consumption and prices for final goods GNP Sectoral output and prices Interindustry allocation of primary resources and shadow prices	Sectoral output (11 sectors) Sectoral investment (residential and commercial buildings) Sectoral employment and wages (11 sectors) Unemployment Personal and disposable income Sectoral energy consumption (11 sectors) Net migration Natural population change Population
Accuracy of Forecasts	Depends on time frame, since interindustry structure in the model is based on current technology and parameters of final goods and intermediate demand functions reflect historical trends	Accuracy cannot be validated; models are intended for long-term economic assessments	Reasonably accurate short-term forecasts; accuracy in long-term assessments is questionable since model parameters reflect the existing economic structure in each region

Instantaneous Adjustment Strategy

This stragegy attempts to answer the question: what would happen if CO_2-induced environmental changes occurred tomorrow, rather than in 50 to 100 years? The rationale underlying this strategy is that, by imposing this kind of a sudden, exogenous shock on the agricultural sector, one can examine how that sector would respond given existing technology and consumer preferences and under existing short-run technological and institutional constraints. The results obtained from this procedure would represent a "worst case" impact scenario. In the long-run, much less costly adjustments to CO_2 buildup can be expected, both because of technological changes within the agricultural sector and due to the greater mobility of land, labor and capital given a long enough period of time to optimally adjust to these changes. Such an approach can be beneficial because:

- It will provide a lower bound on net societal benefits and/or an upper bound on the costs of CO_2 buildup.
- It can point to potential trouble spots in the agricultural sector, which can then be assessed more closely in terms of subjective judgments about potential future problems in these areas.
- It can provide information about the types of environmental changes which are likely to cause the most or least severe problems, and additional research can be focused on assessing the probabilities of these events actually occurring.

Dynamic Adjustment Strategy

The basic problem with the static approach to simulating the economic impact of CO_2 buildup is that it is not very realistic. The effects of CO_2 buildup on crop yields will occur gradully over time, not suddenly. While the static strategy may be useful as a possible indicator of the severity of the impacts associated with CO_2 buildup, it does not provide any insight about the way in which the economy might adjust, differentially, to CO_2 buildup over time. In order to do this, dynamic models can be used to examine how today's economy will respond to gradual changes in the state of

the environment. In that way, a better understanding can be gained about the timing and sequence of economic impacts. Again, this approach does not imply that these impacts will actually occur, since the adjustments that the economy will be able to make to changes in the environment will invariably be consistent with the much greater mobility of resources in the long-run. Nevertheless, this approach will make it possible to examine the temporal aspect of resource mobility in an economic setting of partial, but not full adjustment.

An important feature of both these strategies is that they can be used immediately to analyze the sensitivity of the agricultural and nonagricultural sectors of the economy to a range of hypothetical CO_2-induced changes in the environment, rather than waiting for more accurate climate scenarios. This is a valuable type of exercise because it can be used to provide information on a current basis about the types of climatic and other environmental changes which appear most (or least) likely to create potentially severe economic impacts. This information can, in turn, be used to refocus research upon specific problems in specific regions in order to provide more accurate information about the possible economic consequences of CO_2 buildup, on an ongoing basis.

THE MODELING SYSTEM

Figure 2 is a schematic diagram which illustrates how the different kinds of models identified in this report can be used to simulate the direct and economic impacts of CO_2 induced environmental changes. Once constructed, the modeling system shown below could be used in either a static or dynamic framework. The system is also flexible enough that it could be used without climate, or even regional crop yield models, to assess the sensitivity of the U.S. economy to hypothesized CO_2-induced yield changes.

Simulation Procedure

Forecasting the direct and indirect economic impacts of CO_2-induced environmental changes using the modeling system shown in Figure 2 would involve the following steps:

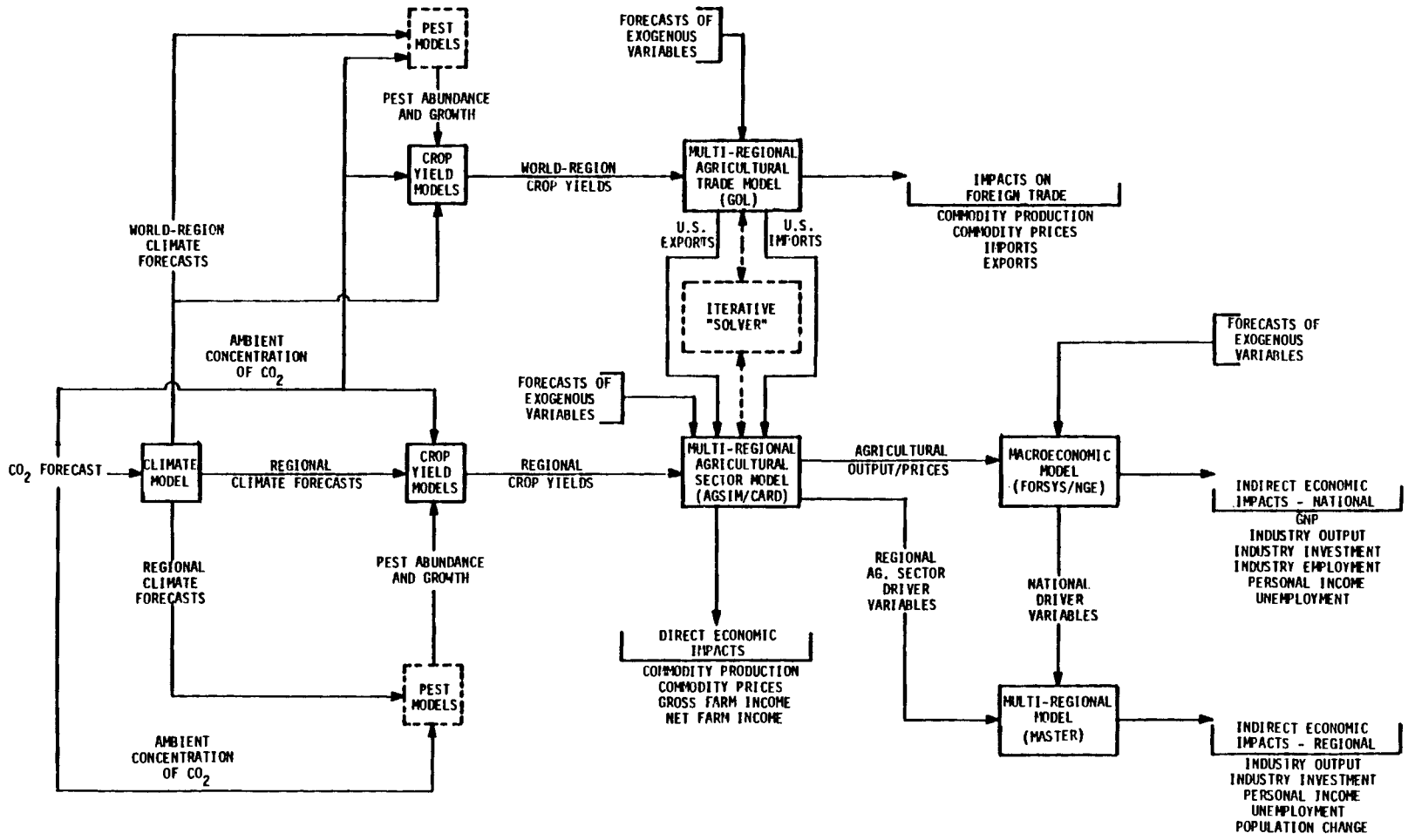

FIGURE 2. Schematic Diagram of Modeling System for Assessing Direct and Indirect Economic Impacts of CO_2-Induced Environmental Changes Related to Agricultural Production

Step 1 - Co_2 Forecast

Information about future changes in the ambient concentration of CO_2 would be required to drive a climate model, as well as weed-pest models and regional crop yield models for both U.S. and world regions.

Step 2 - Regional Climate Forecasts

Future CO_2 levels would be inserted into a world climate model to produce regional climate forecasts for both U.S. and world regions.

Step 3 - Regional Pest Forecasts

Information about future CO_2 levels (from the CO_2 forecast) and regional climate changes (from the climate model) would be used to drive models designed to predict changes in the abundance and growth rates of weed, insect and disease pests for both U.S. and world regions. The availability and quality of such models was not examined in the report and the broken lines indicating these models signify the need to explore the state-of-the-art in pest modeling in detail.

Step 4 - Regional Crop Yield Forecasts

Future CO_2 levels, and other relevant driver variables from regional climate models and regional pest models would be used in conjunction with a system of crop-specific simulation models to forecast the first- and second-order environmental effects of CO_2 buildup on crop yields for both U.S. and world regions. If regional statistical crop yield models are employed, then only regional climate forecasts for the relevant meteorological variables in each of these models would be required to predict regional changes in crop yields. However, the range of environmental impacts on crop yields predicted by these models would be limited to those caused by CO_2-induced climate change.

Step 5 - World Agricultural Trade Forecast

All of the economic models in this system contain exogenous variables whose values must be determined prior to simulating the impacts of CO_2 buildup. This will require the construction of one or more, internally

consistent, economic scenarios that can be used in conjunction with all of the economic models. Once the values for the relevant exogenous variables in GOL have been determined, the crop yield forecasts for world regions would then be used to simulate the impacts of CO_2 buildup on world agricultural commodity trade.

Step 6 - Regional Forecasts of Direct Economic Impacts

Driver variables required to simulate the direct economic impacts of CO_2 buildup in the U.S include the regional crop yield forecasts for the U.S. and agricultural commodity exports and imports between the U.S. and rest-of-world regions from GOL. The broken lines, indicating an iterative "solver" between the two models, points to the possibility of integrating GOL with the AGSIM and/or CARD models and solving the system of models simultaneously.

Step 7 - Forecast of Indirect Economic Impacts on the National Economy

Forecasts of these impacts would be generated by adjusting the final demand prices and interindustry sales of agricultural products within FORSYS and/or an NGE model of the U.S. economy to conform to the values obtained from AGSIM and/or the CARD model.

Step 8 - Forecast of Indirect Economic Impacts at the Regional Level

The final step of the simulation procedure would involve setting the relevant national driver variables in the 316 regions contained in MASTER to the gross output values generated for the agricultural sector either by AGSIM/CARD or FORSYS/NGE and for the remaining nonagricultural sectors by FORSYS/NGE.

CONCLUSIONS AND RECOMMENDATIONS

The primary objectives of this research were:

- To determine what economic methods and models have been developed or need to be developed to assess the direct and indirect economic impacts of CO_2-induced environmental changes in the agricultural sector of the U.S. economy.

- To provide information and recommendations which will enhance DOE's efforts to assess the direct and indirect economic impacts associated with CO_2 buildup, not only as they relate to the agricultural sector, but to other sectors of the U.S. economy as well.

Conclusions

General conclusions arrived at as a result of the research conducted to achieve the above objectives are as follows:

Need for Regional Models

Because the impacts of CO_2 buildup on crop yields may vary from region to region, future assessments of the direct and indirect economic impacts caused by CO_2 should be conducted on both a regional and national basis.

Modeling System

The most practical means of assessing the direct and indirect economic impacts of CO_2-induced environmental changes would involve the development of a largely recursive system of models. Individual components of this system would include:

1. a state-of-the-art climate model
2. a system of crop-specific simulation models
3. a multi-regional agricultural sector model for the U.S.
4. a world agricultural trade model
5. a macro-model of the U.S. economy
6. a multi-regional econometric model.

Model Adequacy

Existing agricultural sector models can be effectively linked, without extensive modifications, to existing world trade, macroeconomic and multi-regional econometric models to assess the direct and indirect economic impacts associated with CO_2-induced environmental changes which affect agricultural production. However, more extensive research will be required to:

- Improve the accuracy and the spatial resolution of climate models so that they are capable of providing the regional climate information required to produce regional crop yield forecasts.
- Develop the full capability of crop simulation models to predict the full range of first- and second-order environmental effects on crop yields on a regional basis that is compatible with the agricultural sector model used in the analysis.

Recommendations

It is recommended that the modeling system outlined in this report be adopted as a basis for assessing the direct and indirect economic impacts of CO_2-induced environmental changes which affect agricultural production. Recommendations pertaining to the development and/or modification of the components of this system are as follows:

Development of Climate Models

Much can be learned fairly quickly about the sensitivity of the U.S. economy to both sudden and gradual CO_2-induced climate changes using existing information. However, long-range research goals that should be pursued in the field of climate modeling in order to achieve more accurate forecasts include:

- The development of global circulation models (GCMs) that can simulate climatic changes over the actual physical geography of existing regions and which can be validated using empirical data on current climate from these regions.
- Improving the accuracy of GCM-based climate forecasts at existing levels of spatial (5° square grid) and seasonal (23-30 days) resolution.
- The development of a capability to provide climate forecasts in a stochastic framework.

Development of Crop Yield Models

- For the immediate future, the influence of variations in meteorological variables on crop yields should be incorporated directly within the framework of a multi-regional econometric agricultural sector model by re-estimating the yield equations of the model using readily available historical data bases created by the U.S. Department of Agriculture.
- In the meantime, efforts should be undertaken to fund research related to improving the generality of statistical crop yield models and to substitute these new yield equations for those previously estimated in the initial research/simulation stage.
- At the same time, long-term research should be focused on developing a capability to ultimately replace these submodels with a system of crop simulation models to predict the full range of first- and second-order environmental effects on crop yields for all crops contained within the agricultural sector model used in the analysis.

Development and Modification of Economic Models

- Explore the feasibility of constructing a prototype normative general equilibrium model of the U.S. economy to use as a complement to FORSYS.
- The yield equations within the AGSIM model should be re-estimated using meteorological data in order to make the effect of weather on yields endogenous to the model.
- The acreage response equations within AGSIM should be re-estimated to include the effect of climate-induced risk on planting decisions.
- Yield equations for each country-crop combination included in the GOL model should be estimated and integrated within the structure of the model.
- The primary resources sectors in FORSYS should be expanded to include both water and land resources; however, alternative methods for doing this must be first examined more carefully in light of possible data limitations.

DISTRIBUTION

No. of Copies

OFFSITE

100 M. Riches
Carbon Dioxide Research Division
U.S. Department of Energy
A1-3101 Century 21 Bldg.
Germantown, MD 20545

27 DOE Technical Information Center

D. Baker
Crop Simulation Unit
Agricultural Research Service
U.S. Department of Agriculture
Mississippi State, MS 39762

G. Collins
Department of Agricultural Economics
Texas A&M University
College Station, TX 77843

J. Edwards
Department of Agricultural and Resource Economics
Oregon State University
Corvallis, OR 97330

B. English
Center for Agricultural and Rural Development
Iowa State University
Ames, IA 50010

A. Hecht
Director, National Climate Program
National Atmospheric and Oceanographic Administration
Room 508, Bldg. 5
6010 Executive Blvd.
Rockville, MD 20852

No. of Copies

OFFSITE

J. Hoffman
Energy Policy Division
Environmental Protection Agency
Room 431 West Tower, Waterside Mall
401 M St. S.W.
Washington D.C. 20460

C. Howe
Department of Economics
University of Colorado
Boulder, CO 80309

N. Strommen
World Agricultural Outlook Board
U.S. Department of Agriculture
South Agriculture Bldg.
Independence Ave, SW 20250

R. Taylor
Department of Agricultural Economics
Montana State University
Bozeman, MT 59715

T. Waltz
National Climate Program
National Atmospheric and Oceanographic Administration
Room 508, Bldg. 5
6010 Executive Blvd.
Rockville, MD 20852

15 M. White
No. 1 Cyclotron Rd.
Lawrence Berkeley Laboratory
Berkeley, CA 94720

No. of
Copies

ONSITE

DOE Richland Operations Office

H. E. Ransom

61 Pacific Northwest Laboratory

J. M. Callaway
F. J. Cronin
J. W. Currie (50)
D. E. Deonigi
J. Tawil
Technical Information (5)
Publishing Coordination (2)