Spare

DOE/NOAA/OTEC-14(Appendices)

OCEAN THERMAL ENERGY CONVERSION
COLD WATER PIPE PRELIMINARY DESIGN PROJECT

Appendices to Final Report

MASTER

November 20, 1979

Work Performed Under Contract No. EG-77-A-29-1078

TRW, Inc.
Energy Systems Group
McLean, Virginia

NOTICE
PORTIONS OF THIS REPORT ARE ILLEGIBLE.
It has been reproduced from the best available copy to permit the broadest possible availability.

U.S. Department of Energy

Solar Energy

DISTRIBUTION OF THIS DOCUMENT IS UNLIMITED

DISCLAIMER

D02715

OCEAN THERMAL ENERGY CONVERSION
COLD WATER PIPE PRELIMINARY DESIGN PROJECT

APPENDICES TO
FINAL REPORT

20 NOVEMBER 1979

Prepared For

NOAA/DOE

Under Contract MO-A01-78-00-4141

Prepared By

TRW
ENERGY SYSTEMS GROUP

APPENDIX A

FIBERGLASS REINFORCED PLASTIC COLD WATER PIPE SPECIFICATION AND DRAWINGS

CONTENTS

TECHNICAL SPECIFICATION
FIBERGLASS REINFORCED PLASTIC
COLD WATER PIPE

1. SCOPE

1.1 This specification covers the fiberglass reinforced plastic cold water pipe (CWP) system for a 40 MW_e Ocean Thermal Energy Conversion modular demonstration plant. Included are requirements for materials, workmanship, delivery, assembly, inspection and quality assurance qualifications requirements for the pipe manufacturer and the contractor constructing the CWP system. The pipe manufacturer shall supply all technical support necessary to insure that the CWP system will satisfy all requirements included herein.

TRW and its designated represented shall be considered the contracting officer.

1.2 The contractor shall furnish, fabricate, transport, and assemble a fiberglass reinforced plastic cold water pipe and associated equipment as required by the contract.

1.3 The cold water pipe shall be fabricated and assembled in Puerto Rico.

1.4 Assembly of the cold water pipe shall include all activities required to extract fabricated spools from the mandrels, transport them to the assembly area, position them for joining, and make the butt and strap joints.

2. GENERAL DESCRIPTION

2.1 The potential shortages of fossil fuels and the growing cost of nuclear fission power plants have stimulated the Department of Energy into research and development of the practicality of utilizing the vast undepletable resource of solar energy. One method of harnessing solar energy, originally conceived by the French physicist Jacques d'Arsonval in 1881, is Ocean Thermal Energy Conversion (OTEC). OTEC plants utilize the existing thermal gradients of oceans to operate a heat engine (for generation of electricity or to provide prime power for an industrial application) using the warm surface waters in the tropic oceans as a high-temperature reservoir and the colder water existing at greater depths as a low-temperature reservoir to produce work. The CWP specified by this specification will be used to upwell cold seawater in excess of 2 million gallons of water per minute from an ocean depth of 3280-feet for a 10/40 MW_e modular plant.

The OTEC power system is based on a Rankine thermodynamic cycle, utilizing a volatile working fluid, such as ammonia, which vaporizes and condenses over small temperature ranges in a closed system. The working fluid is vaporized by the warm surface seawater in the evaporator heat exchanger. The vapor passes through a low-pressure turbogenerator to generate electrical power either for transmission to shore or for direct in-situ usage in an associated, energy-intensive manufacturing, processing plant (e.g., ammonia production for fertilizer on aluminum smelting). The vapor exhausted by the turbine flows through another heat exchanger where it is cooled and condensed back into a liquid, The condensed working fluid works its way around the closed system to the evaporator, where the process begins all over again.

2.2 The CWP system consists of a fiberglass reinforced plastic pipe, 30 feet inside diameter by 3,280 feet in length. It shall be constructed in spools approximately 60 feet in length, utilizing multiple helix angles, filament winding, unidirectional roving, end grain balsa sandwich construction, and a vinyl ester thermosetting resin.

2.3 The spools will be provided with an alignment bell on one end to facilitate assembly and two trapezoidal hollow stiffeners on each spool piece. Assembly will be made using butt and strap joints in an excavated ditch which will later be flooded and the entire 3,280 feet of assembled pipe towed out to the deployment area.

3. CODES, STANDARDS, AND REGULATIONS

3.1 All materials and fabrications furnished in accordance with this specification shall comply with all federal and state laws and local ordinances of the place of installation and with the following codes and standards to the extent referenced herein. Unless otherwise noted, the document with addenda, amendments, and revisions in effect on the date of the purchase order will apply. Where this specification and any referenced document conflict on requirements, the more severe shall govern.

Agricultural 188	Dry Kiln Operations Manual
ASTM B265-58T Gr. 1	Specification for Titanium Bar Stock
ASTM D618	Conditioning Plastics and Electrical Insulating Materials for Testing
ASTM D638	Test for Tensile Properties of Plastics
ASTM D790	Test for Flexural Properties of Plastics
ASTM D883	Definitions of Terms Relating to Plastics
ASTM D1600	STD Abbreviations of Terms Relating to Plastics
ASTM D1725	Test for Viscosity of Resin Solution
ASTM D2310	Classification for Machine-Made Reinforced Thermosetting Resin Pipe
ASTM D2343	Test for Tensile Properties of Glass Fiber Strands, Yarns, and Rovings Used in Reinforced Plastics

ASTM D2344	Test for Apparent Horizontal Shear Strength of Reinforced Plastics by Short Beam Method
ASTM D2471	Test for Gel Time and Peak Exothermic Temperature of Reacting Resins
ASTM D2563-70	Practice for Classifying Visual Defects in Glass Reinforced Plastic Parts
ASTM D2583	Test for Indention Hardness of Plastics by Means of a Barcol Impressor
ASTM D2584	Test for Ignition Loss of Cured Reinforced Resins
ASTM D2586	Test for Hydrostatic Compressive Strength of Glass-Reinforced Plastic Cylinders
ASTM D 2924	External Pressure Resistance of Plastic Pipe
ASTM D2992	Obtaining Hydrostatic Design Basis for Reinforced Thermosetting Resin Pipe and Fittings
ASTM C297	Tension Test of Flat Sandwich Constructions in Flatwise Plane
ASTM C393	Flexure Test of Flat Sandwich Construc-Constructions
MIL-B-23101	Mil Spec-Balsa "Ochroma Lagopus"
MIL-S-7998	Sandwich Construction (Covers core material balsa wood)
MIL-W-6110	Woods, Determination of Content Moisture
MMM-A-188b	Adhesives-Urea (Used to bond balsa to balsa wood)
PS 15-69	NBS Voluntary Product Standard
FTMS 406	Federal Test Method Standards, Method 5012

3.2 The contractor shall indicate in his proposal the conformance of his materials to this specification and the standards referenced herein. The contractor shall also list in his proposal any exceptions to this specification or the standards referenced herein, or any other codes or standards, the intent of which is in conflict with this specification or the standards referenced herein.

4. IMPLEMENTATION

4.1 This specification is to be used in conjunction with the design drawings and, as such, a copy of this specification shall be available at the construction site at all times. In case of conflict between the documents the following precedence in descending order shall govern:

(1) Purchase Order

(2) Technical Specifications

(3) Design Drawings

4.2 Quality, as represented by raw materials used, manufacturing practices employed, and condition of the finished product, is of prime importance. Knowledge of new technology in the interest of improved quality and/or lower costs is welcomed by the contracting officer. Any change of materials, alteration of construction, or other deviations from the requirements of this specification, design drawings, or purchase order, however, must be approved in writing by the contract officer, or his designated representative, before implementation of change, alteration, or deviation.

5. QUALITY ASSURANCE

5.1 Spool Identification.

5.1.1 The contractor shall furnish and affix on the outside of each spool a plastic identification plate showing the following information:

Date of Manufacture

Resin Type, Manufacturer, and Batch Number

Shell laminate sequence and thicknesses

Total weight of Spool

Location of Spool Center-of-Gravity

5.2 Qualifications

5.2.1 The contractor will show past experience in the field application of large diameter filament wound pipe. In addition, all plant superintendents and shift foremen will have experience in the fabrication and assembly of large industrial fiber reinforced plastic equipment with balsa wood core.

5.2.2 A statement of critical path scheduling (CPS) shall be submitted in writing prior to the award of the contract and will verify that either the contractor's organization has "in-house capability" qualified to use the technique or that the contractor employs a consultant which is so qualified. "Capability" shall be verified by description of construction projects to which the contractor or his consultant has successfully applied CPS and shall include at least two projects which were controlled throughout the duration of the project by means of periodic systematic review of the CPS schedule.

5.3 Materials Control

5.3.1 Resin

5.3.1.1 Records shall be maintained which reference resin batch identification to each part manufactured.

5.3.1.2 The resin shall be tested per ASTM D2471-71. The gel time and peak temperature shall be within the limits specified.

5.3.1.3 The viscosity of the resin solution shall be tested per ASTM D1725 and shall be between 350-550 centipoises.

5.3.1.4 The frequency of the tests per 5.3.1.2 and 5.3.1.3 shall be as follows:

(1) Receipt of test report as part of letter of resin analysis by resin manufacturer with each batch of resin received.

(2) Resin test by fabricator upon receipt of resin.

(3) Resin test by fabricator after 60 days from date of resin production and every 30 days thereafter.

5.3.2 Glass Reinforcement

5.3.2.1 Each batch of glass shall have a letter of analysis containing the following minimum information:

(1) Identification marks

(2) Yield of glass products (ends)

(3) Type and amount of sizing

(4) Dry tensile strength (roving only)

5.3.2.2 Records shall be maintained which reference glass reinforcement batch identification to each part manufactured.

5.3.2.3 Upon receipt of each batch of glass reinforcement, tests shall be made per ASTM D2343 and shall be within the specified limits.

5.4 Production Control

5.4.1 Process Planning

5.4.1.1 As part of the contractor's bid proposal a detailed layout of the proposed production equipment and facilities shall be included.

5.4.2 Production Equipment

5.4.2.1 Prior to start-up of construction of the production equipment and facilities, the contractor and representatives of contracting officer shall meet and review all planned construction procedures and layouts.

5.4.3 Prior to start-up of fabrication, contracting officer shall inspect the production equipment and tooling to assure compliance with this specification and the contract documents.

5.4.4 Pipe Spools

5.4.4.1 Positive means shall be employed to monitor resin and glass usage while filament winding is in process. System will allow adjustments of resin/glass ratio during manufacturing.

5.4.4.2 Thickness of laminates and total weights of pipe spools must be maintained within specified limits.

5.4.4.3 The manufacturing process must allow for positive control of exothermic temperature within specified limits during gelation and control of laminates.

5.4.5 Pipe Joints

5.4.5.1 Trimming of pipe spool ends shall be accomplished while on the mandrel, and will be done in a manner which will assure a +1/4 inch tolerance for squareness of the ends.

5.4.5.2 All joining materials shall be gathered and premeasured prior to start of joining procedure.

5.4.5.3 A shelter shall be utilized to protect the joint and surrounding area from the weather and other contaminants. Joint shall not be exposed to direct sunlight during lay-up.

5.5 Project Control

5.5.1 The project management tool commonly called critical path scheduling (CPS) shall be employed by the contractor for planning, scheduling and reporting all work required by the contract documents. The precedence method (activity on node) of critical path scheduling shall be used. Precedence method as required by Section 2.1.1 shall be interpreted to be generally as outlined in the Integrated Civil Engineering Systems, Project/2 Basic Manual.

5.5.2 The contractor shall submit for approval of the contracting officer a network diagram describing the activities to be accomplished in the project and their dependency relationships as well as a tabulated schedule. The schedule produced and submitted shall indicate a project completion date on or before the contract completion date. The initial schedule shall include the following minimum data for each activity:

Activity Beginning and Ending Event Numbers

Estimated Duration

Activity Description

Early Start Date (Calendar Dated)

Early Finish Date (Calendar Dated)

Latest Allowable Start Date (Calendar Dated)

Latest Allowable Finish Date (Calendar Dated)

Status (Whether Critical)

Total Float

5.5.3 The network diagram and tabulated schedule when approved by the contracting officer shall constitute the project work schedule until a revised schedule is submitted due to delays beyond the control and without the fault or negligence of the contractor.

5.6 Inspection

5.6.1 Equipment shall be cleaned of foreign material and markings which would block the view of inspection by the contracting officer representative.

5.6.2 The contracting officer inspection representative shall be allowed access as necessary to inspect completed or in-process work and monitor materials or production controls.

5.6.3 Special attention will be paid to joint and shell thicknesses, overlay conditions, condition of corrosion resistant surfaces, primary dimensions, and total weights.

5.6.4 The general classification of visual defects will be per ASTM D2563-70, Grade II.

5.6.5 Preparation of pipe ends for FRP joints per Section 7.4.1 shall be inspected and approved by the contracting officer inspection representative prior to any overlay.

5.7 Testing

5.7.1 Testing of raw materials will be as described in Section 5.3.

5.7.2 Core samples will be taken of each part. These core samples will be examined as follows:

(1) Wall thickness and visual check of wall construction.

(2) Hardness tests shall be made on the inner and outer surfaces using the Barcol impressor, Model GYZJ 943-1, calibrated at two points in accordance with ASTM D2583. Where low readings are encountered, recheck on the following basis: take ten or more readings and calculate average value after discarding the two lowest and the two highest readings.

(3) The sandwich sample shall be tested per ASTM C297.

(4) Glass content shall be determined by the average of five specimens per ASTM D2584. Each sample shall be a minimum of one inch square.

5.7.3 Additional testing may be performed as deemed necessary by the contracting officer.

5.7.4 All testing shall be done by an independent testing group with facilities at the construction site. Costs of testing shall be accounted to the contracting officer.

6. MATERIALS

6.1 Resin

6.1.1 The resin shall be a vinyl ester thermosetting resin, or approved equal.

6.1.2 The resin shall be clear and transparent with suspended solids not to exceed ± one percent of content specified by resin manufacturer.

6.1.3 The resin shall be supplied from the least possible number of individual batches in order to simplify the control of product quality. All records of resin production and quality control shall reference batch identification.

6.1.4 Resin batch identification, date of resin production, resin type, and manufacturer name shall be recorded on each container of resin.

6.1.5 Catalysts and promoters shall be of the type and amount recommended by the resin manufacturer for use with their resin. The resin shall be promoted by the fabricator and tested as prescribed in 5.3.1.2 and 5.3.1.3.

6.1.6 All cab-o-sil resin putty shall be made from the same resin as the part to be treated.

6.2 Reinforcement

6.2.1 Glass fiber reinforcement used shall be a commercial grade corrosion resistant borosilicate glass in chopped strand mat, surfacing veil, woven roving, chopper and winder roving.

6.2.2 All glass fiber reinforcing shall have a silane type surface finish or approved equal, and binder which is specifically compatible with the resin to be used. This surface finish should allow the maximum chemical bonding between the resin and glass.

6.2.3 Surfacing veil shall be c-glass surface veil for all exterior and interior surfaces of the pipe.

6.2.4 Chopped strand mat shall be Type E (electrical grade) glass with a fiber length greater than 0.5 inch and less than 2.0 inch.

6.2.5 Continuous glass roving used in chopper gun for spray-up shall be Type E chopper roving.

6.2.6 Woven roving shall be 24 ounce per square yard with a 5 x 4 plain weave and Type E glass, or approved substitute. Approval shall be verified in writing before being used in construction by the fabrication contractor.

6.2.7 Continuous glass roving used for filament winding shall be Type E glass.

6.2.8 The glass shall be supplied from the least possible number of individual batches to simplify control of product quality. All records of glass production and testing shall be referenced to the glass batch number.

6.2.9 All packages of glass shall be individually identified by manufacturer, batch identification, weight and yield.

6.3 Core Material

6.3.1 Balsa Wood - "Ochroma Lagopus"

6.3.1.1 This section establishes the requirements of balsa wood and balsa laminated blocks to be used in the balsa core sandwich parts of the OTEC Cold Water Pipe.

6.3.1.2 Balsa wood laminated blocks for use shall be grade-selects or better and assembled into sheets with a scrim backing on one side for ease of handling.

6.3.1.3 The balsa wood shall be harvested, processed and graded consistent with the guidelines of the following specifications:

(1) MMM-A-188b

(2) MIL-W-6110

(3) MIL-S-7998

(4) MIL-B-23101

(5) Agricultural 188

6.4 Fittings and Fasteners

6.4.1 All metal fittings and fasteners shall be fabricated of Titanium or Titanium alloy.

6.5 Screen

6.5.1 The screen shall be commercial grade fabricated of vinyl ester thermosetting resin with maximum openings of one inch by one inch and a minimum open area of 50 percent.

7. FABRICATION

7.1 Laminates

7.1.1 General

7.1.1.1 Positive methods shall be used to assure uniform total thickness of laminates and consistent glass to resin ratios. Wall thicknesses shall be within the tolerances specified herein.

7.1.1.2 Structural laminates shall be dense and without dry spots. Size and number of air bubbles shall be held to a practical minimum.

7.1.1.3 The fabricated unit shall be made by a technique which will assure a bubble free, smooth, resin-rich and chemical resistant inner surface.

7.1.1.4 The outer surface of the pipe shall be relatively smooth and no glass fibers shall be exposed The final ply shall be one layer of c-glass using unpigmented resin and wax additive as necessary to allow full cure of the exterior surface.

7.1.2 Inner Layer

7.1.2.1 A separately cured unreinforced gel coat shall not be used.

7.1.2.2 Surface shall be resin-rich and reinforced with 10 mil or more thick c-glass surfacing veil.

7.1.2.3 Follow with 3 ounce or more of chopped strand glass applied in two layers. Each layer of reinforcing should be rolled out separately. This portion shall contain not less than 20 percent or more than 30 percent glass (by weight). No other glass product is permitted between these layers.

7.1.2.4 This laminate shall be allowed to gel prior to subsequent filament winding in order to maintain maximum resin content in the chopped strand glass laminate; however, Barcol hardness shall not exceed ten before starting filament winding.

7.1.3 Interior Structural Layer

7.1.3.1 The filament wound structural wall construction will alternate layers of circumferential winding and layers of unidirectional roving with glass axis in the tank axial (α = zero degrees) direction. The laminate thickness ratio of circumferential winding to unidirectional roving thickness shall be two to one. The maximum thickness of any single layer of unidirectional roving shall be 0.05 inch. This construction sequence shall be continued to satisfy the filament wound thickness on the design drawings. The final filament wound layer shall be of circumferential winding. The glass content for this construction shall be 55-65 percent. Multiple helix angles between 45 and 80 degrees shall be used.

7.1.4 Bed Coat

7.1.4.1 The filament winding of the interior structural layer shall be followed by 3 ounces of chopped strand glass, applied in two layers. Gel time and application of these layers shall be controlled in such a way that the core material can be subsequently pressed into the wet laminate to produce proper adhesion of the two.

7.1.5 Core Layer

7.1.5.1 All core materials shall be applied in a uniform manner taking care to minimize the voids between adjacent strips of core material. Bevel all edges of the core material as shown in the design drawings.

7.1.5.2 A sealing coat of resin shall be applied to the end-grain surfaces of the balsa wood. This sealing coat shall have a rapid gel time and shall be applied and shall gelate before the balsa core is mounted onto the bed coat.

7.1.6 Top Coat. The core layer shall be followed by 3 ounces of chopped strand glass laid-up in two layers. This laminate shall be allowed to gel as per Section 7.1.2.4.

7.1.7 Exterior Structural Layer. This specification for this layer shall be identical to that of Section 7.1.3.

7.1.8 Exterior Layer. The exterior structural layer shall be followed by 3 ounces of chopped strand glass applied in two layers. The outer surface of the pipe shall be per Section 7.1.1.4.

7.2 Stiffeners

7.2.1 Circumferential stiffeners shall be wound onto the pipe shell in accordance with the design drawings. Stiffeners shall be overlaid as per Section 7.1.8.

7.2.2 A separate mold shall be constructed in the cross sectional shape of the stiffener shown in the design drawings with a circular arc not to exceed 180 degrees. This mold shall be used to fabricate stiffener forms to be attached to the spools following application of the exterior structural layer (7.1.7). Before application of the exterior layer (7.1.8), a filament wound laminate shall be constructed over the prefabricated stiffener forms to a minimum thickness as specified on the design drawings. As such the prefabricated forms shall be stiff enough to withstand the winding pressure, yet flexible enough to permit close conformance to the outer shape of the pipe spool.

7.3 Flanged Elements

7.3.1 Unless otherwise specified, gaskets, washers, and bolts shall be supplied by the contractor.

7.3.2 Flanged elements shall be made by hand lay-up construction and fabricated in accordance with the design drawings.

7.3.3 Overall machine facing of the back of flanges is not permitted. To obtain proper seating, bolt holes where required shall be spot faced, for SAE size washers. Bolt holes and all other cut surfaces shall be resin coated.

7.3.4 All nozzles shall be installed as shown on design drawings in accordance with the tolerances of Figure 1.

7.3.5 Depressions or projection in flange face shall be no greater than 1/32".

7.4 Domed Bottom

7.4.1 The domed bottom and deployment domes shall be constructed as shown in the design drawings. Fabrication shall be by hand lay-up methods only.

7.5 7.5 FRP Joints

7.5.1 Prior to making overlays, the cured or wax coated surfaces of the ends of the pipe sections must be roughened thoroughly by sanding or sandblasting. All traces of wax coat must be removed. The roughened area shall extend one-inch minimum beyond the proposed overlay edge. The roughened area must be completely coated with resin at the completion of the joint.

The requirement for adequate surface preparation and no surface contamination prior to the secondary overlay is imperative. Every precaution should be made to assure adequate surface preparation and good chemical bonding of the secondary overlays.

7.5.2 Pipe sections shall be joined utilizing the alignment lugs and draw bolts in order to assure positive control is maintained at the joint interface. The sections shall be brought together firmly and secured with the draw bolts to prevent displacement of the joint interface during overlaying. The draw bolts will be removed consecutively as the overlay progresses around the circumference of the pipe.

7.5.3 Voids at mating edges shall be a maximum of 1/2 inch gap. All mating edges shall be resin coated thoroughly and voids completely filled with resin putty to produce smooth surfaces.

7.5.4 The joint ply sequence shall be as shown on the drawings. Each successive reinforcement ply shall extend 1/2 inch beyond each side of the preceding ply. Interior joints shall be identical to exterior joints.

7.5.5 All surfaces shall be covered by a final ply of c-glass surface veil which will extend 1/2 inch beyond the edge of the final ply of mat. This inner surface shall be smooth and resin-rich. No thixotropic agent shall be used in the resin for the final three plies.

7.6 Tolerances

7.6.1 Tolerances on fabrication of FRP pipe sections shall be ± 1/4 inch for lengths, ± 15 minutes for angles, and plus 3/16 inch, minus 1/16 inch for thickness, unless otherwise indicated on the design drawings. Pipe internal diameter of 30 feet shall be fabricated to ± 1/2 inch with a 3/16 inch mismatch.

7.6.2 Tolerances on installation of nozzles shall be per figure 1.

7.6.3 Tolerance in bolt hole locations and in diameter of bolt circle shall be ± 1/16 inch.

8. ASSEMBLY

8.1 Specialized Equipment. This contract includes, but is not limited to, design, development, and construction of the following specialized equipment for the fabrication of a thirty foot inside diameter FRP cold water pipe:

8.1.1 Collapsing mandrel and all accessory equipment for applying resin, glass reinforcement, and core material in such a way as to meet the requirements of this specification.

8.1.2 Equipment to safely extract fabricated pipe sections from the mandrel and to transport them from the mandrel to the assembly yard. This equipment shall have the capability of measuring the total weight of each pipe section and of locating its center of gravity.

8.1.3 All tracks, dollies, cranes, hoisting devices, and other equipment necessary to safely transport, mate and join successive sections of pipe.

8.1.4 All necessary support equipment and facilities required to fulfill the requirements of this specification and the contract documents.

8.2 Handling

8.2.1 Positive measures will be taken at the time each pipe section is removed from the mandrel to protect it from damage caused by abrasion, inadvertent dropping, striking or being struck by other objects, or breakage or distortion baused by mishandling or inadequate support.

8.2.2 When working in or around FRP equipment, care should be exercised to prevent tools, scaffolding, or other objects from striking or being dropped on or inside the equipment. Soft soled shoes should be worn by workmen entering the equipment. Where ladders are used, all points of contact should be cushioned to protect the surface from scratching or point loading.

8.2.3 Proper rigging and hoisting practices shall be observed at all times.

8.2.3.1 The use of multiple cranes and a track mounted dolly is suggested for lifting and positioning pipe sections. Ideally, the slings or cables attached to the equipment should lift as nearly to vertical as possible, and shall under no circumstances become more than 45 degrees from vertical. A spreader bar may be necessary to keep lifting angle in this range.

8.2.3.2 When it is necessary to use lifting slings in direct contact with the FRP equipment, the slings shall be woven nylon or canvas at least 6 inches and shall be located near enough together to prevent damage to the shell from either stress or buckling.

8.2.3.3 Do not attach lifting slings or cables to (nor allow them to come in contact with) any fittings other than lifting and/or anchor lugs.

9. Fiberglass Reinforced Plastic Cold Water Pipe Design Drawings

Drawing Number	
1	FRP Cold Water Pipe
2	Hull Attachment
3	Support Shoulder
4	Typical Wall Section
5	Typical CWP Spool
6	Stiffener Detail
7	Typical Butt Joint
8	Alignment Lug
9	Spool with Ballast Collar
10	Ballast Collar
11	FRP Drilled Flange
12	FRP Screen Section
13	Screen Section - Plan
14	Grating Screen Detail
15	Screen Construction
16	Grating Attachment
17	Screen Section Dome
18	Access Manway
19	Deployment Dome

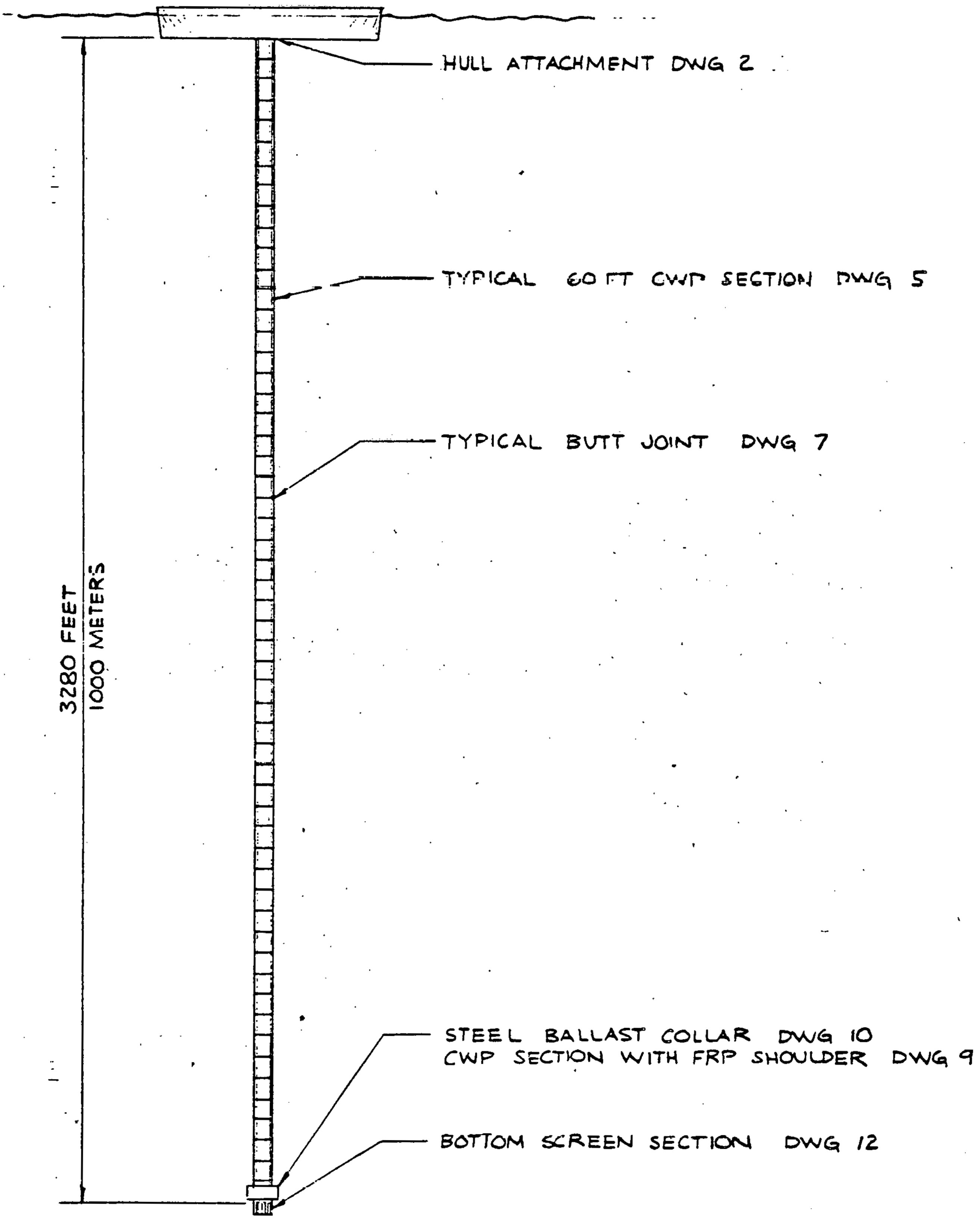

Fiberglass Structural Engineering	ETA	FRP COLD WATER PIPE	DWG 1

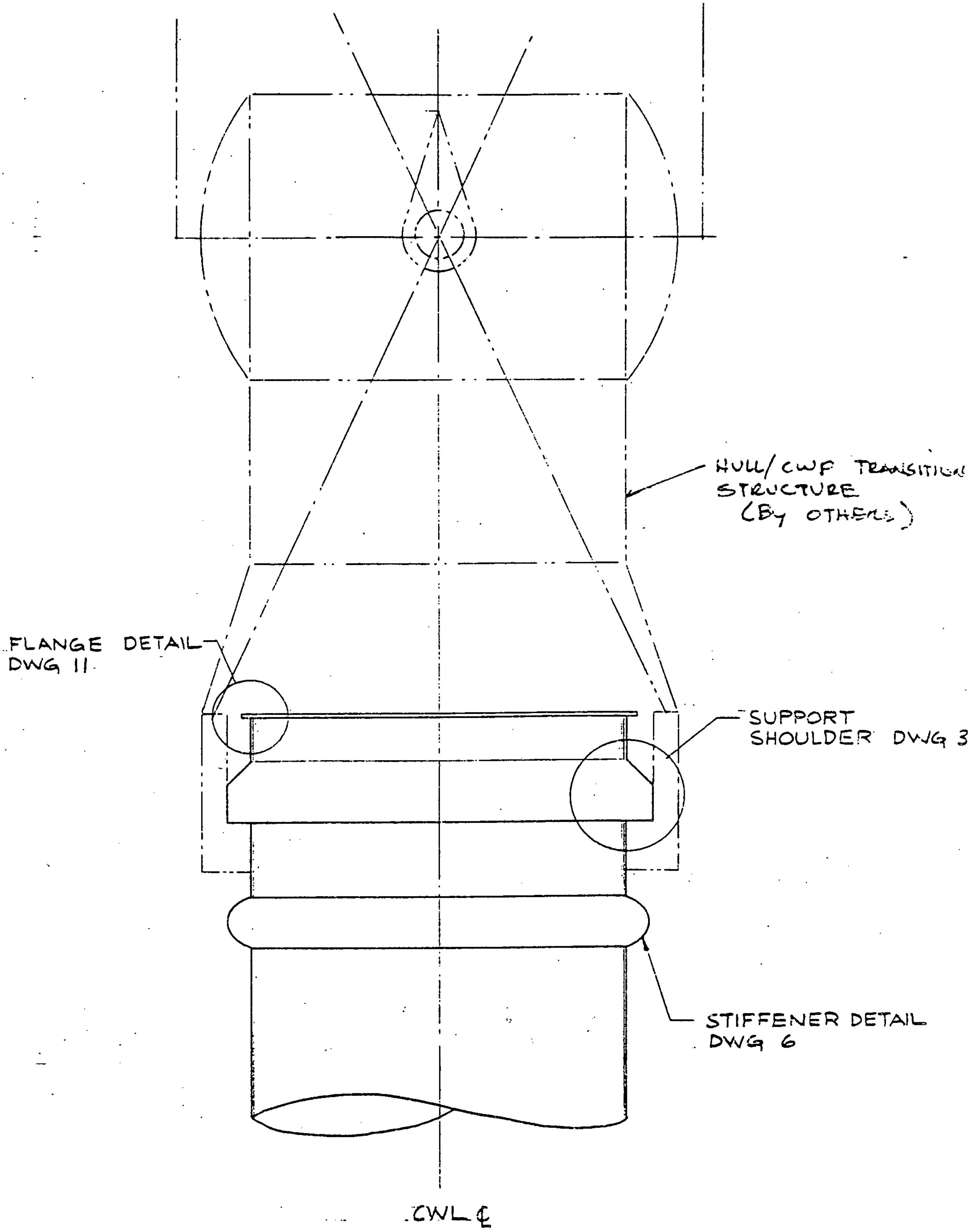

Fiberglass Structural Engineering	ETA	HULL ATTACHMENT	DWG 2

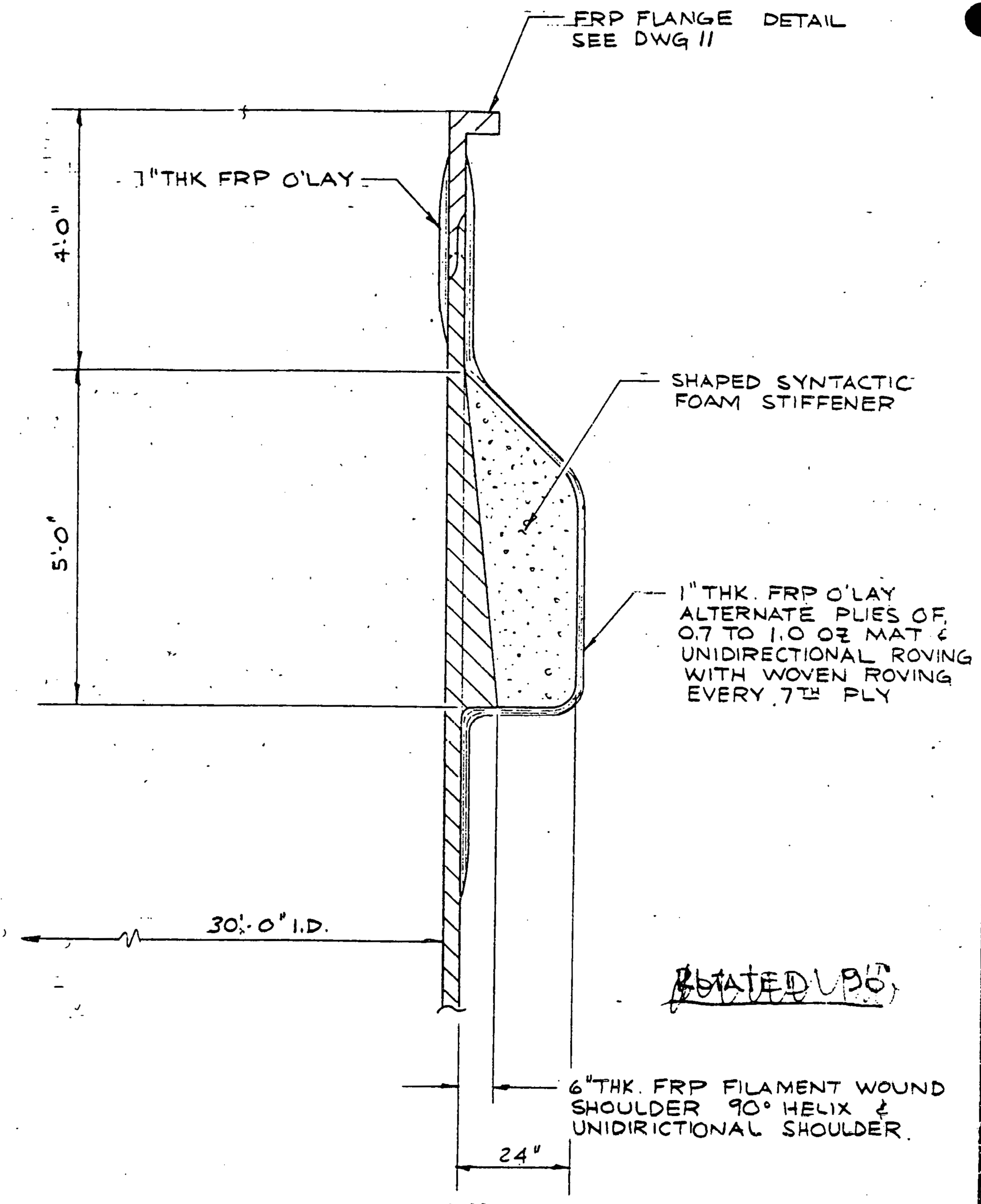

Fiberglass Structural Engineering	ETA	SUPPORT SHOULDER	DWG 3

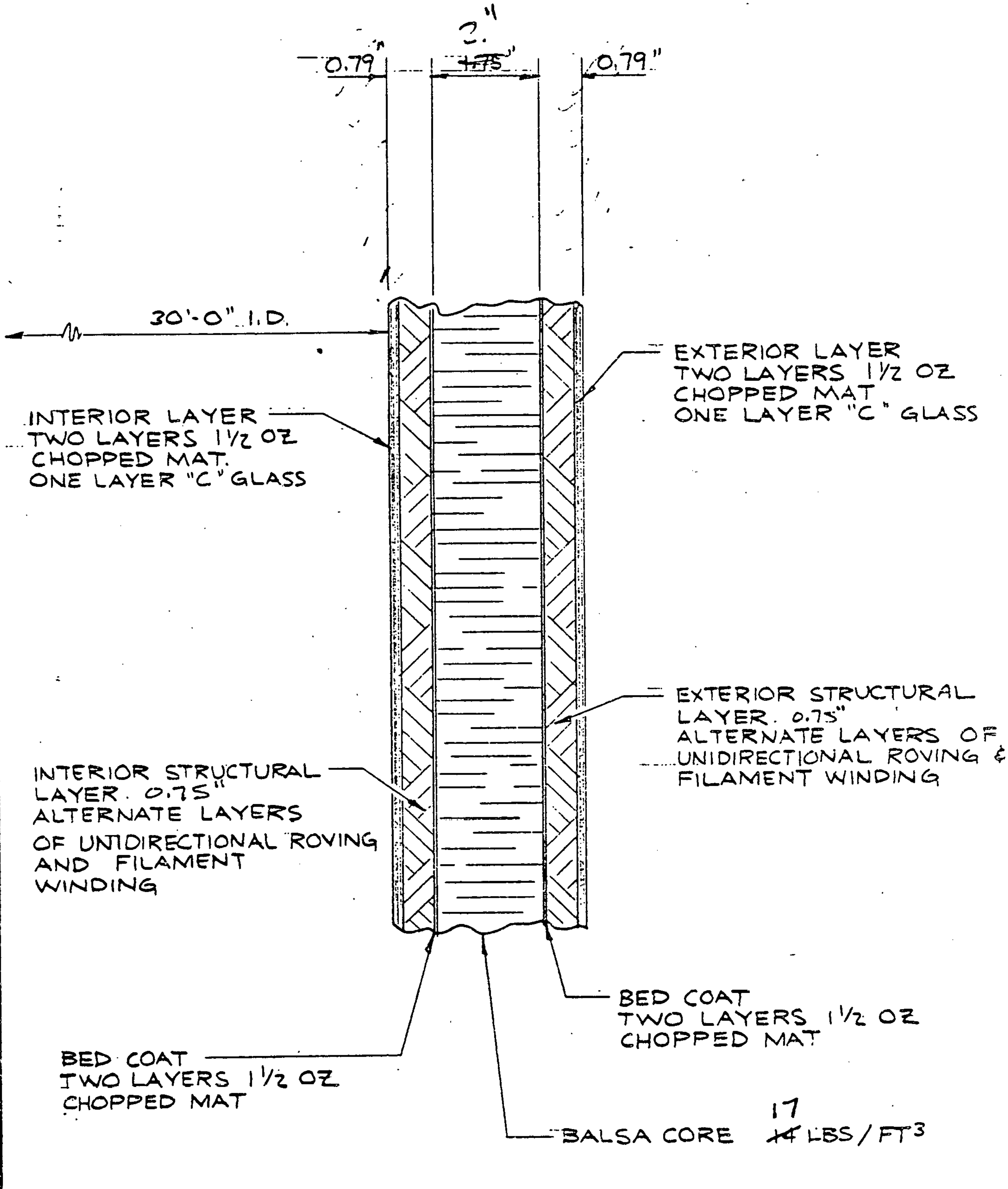

Fiberglass Structural Engineering	ETA	TYPICAL WALL SECTION	DWG 4

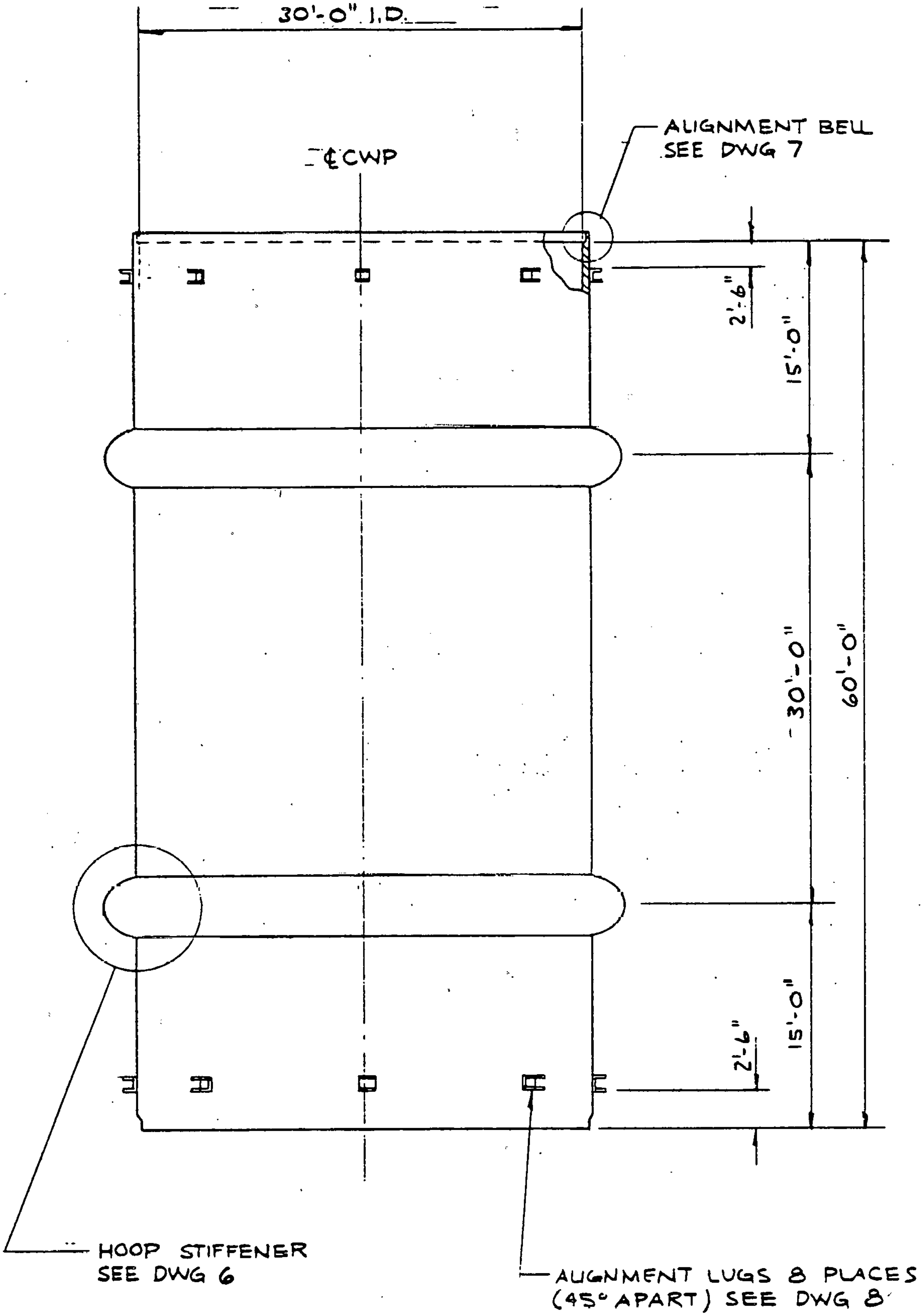

Fiberglass structural engineering	ETA	TYPICAL CWP SPOOL	DWG 5

NOTE: SEE TYPICAL WALL LAMINATE DWG 4

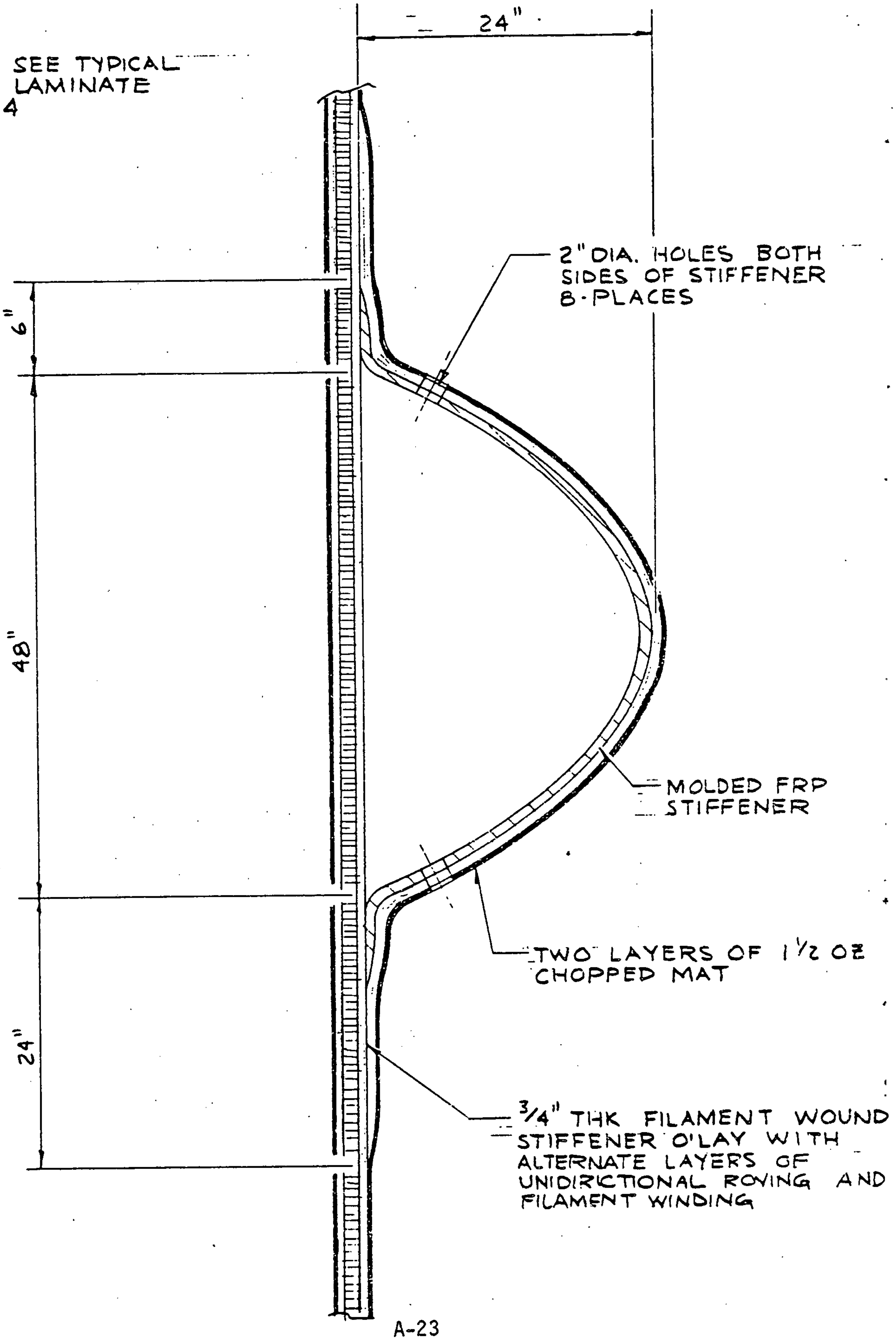

Fiberglass Structural Engineering	ETA	STIFFENER DETAIL	DWG 6

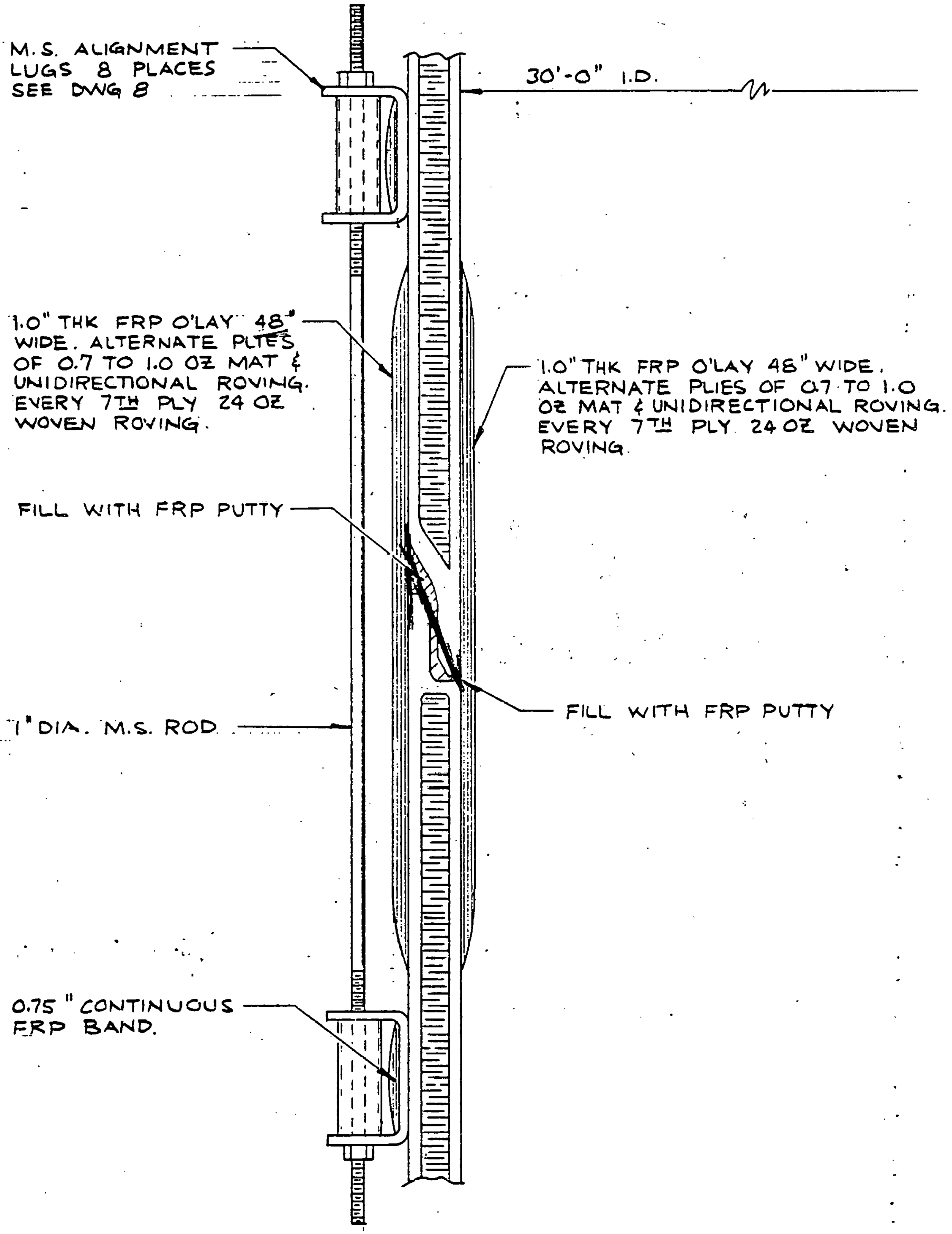

Fiberglass Structural Engineering	ETA	TYPICAL BUTT JOINT	DWG 7

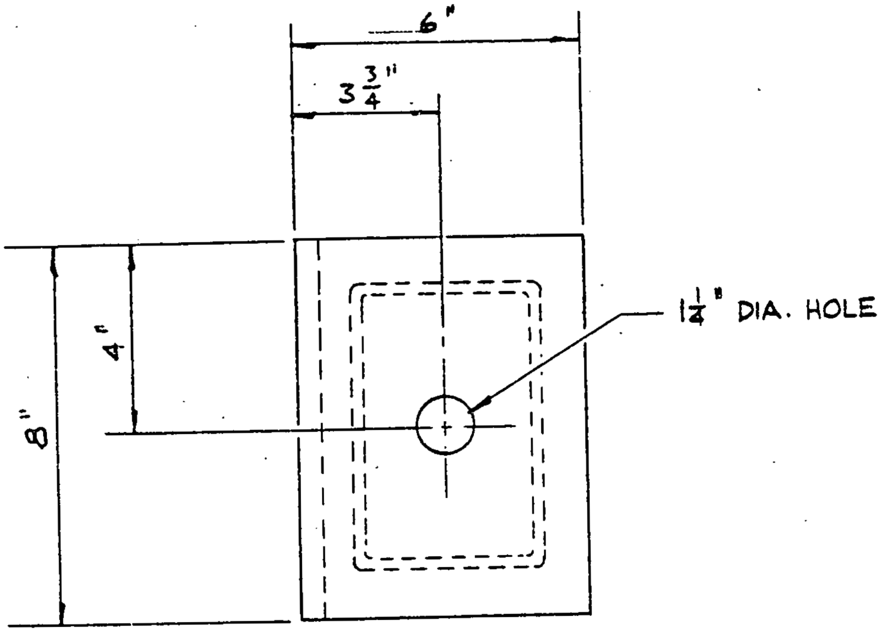

PLAN

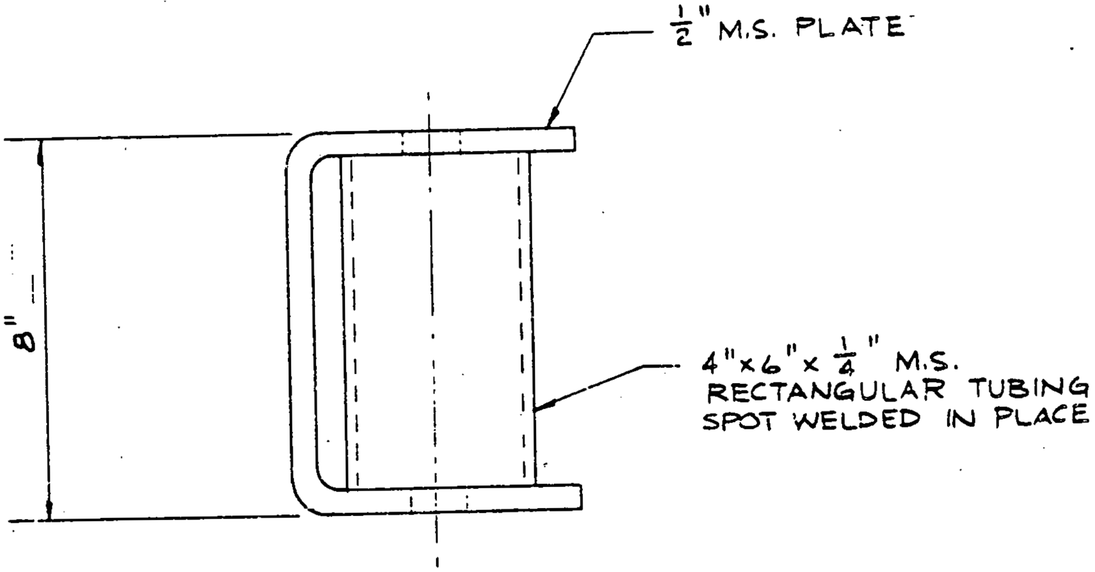

ELEVATION

Fiberglass Structural Engineering	ETA	ALIGNMENT LUG	DWG 8

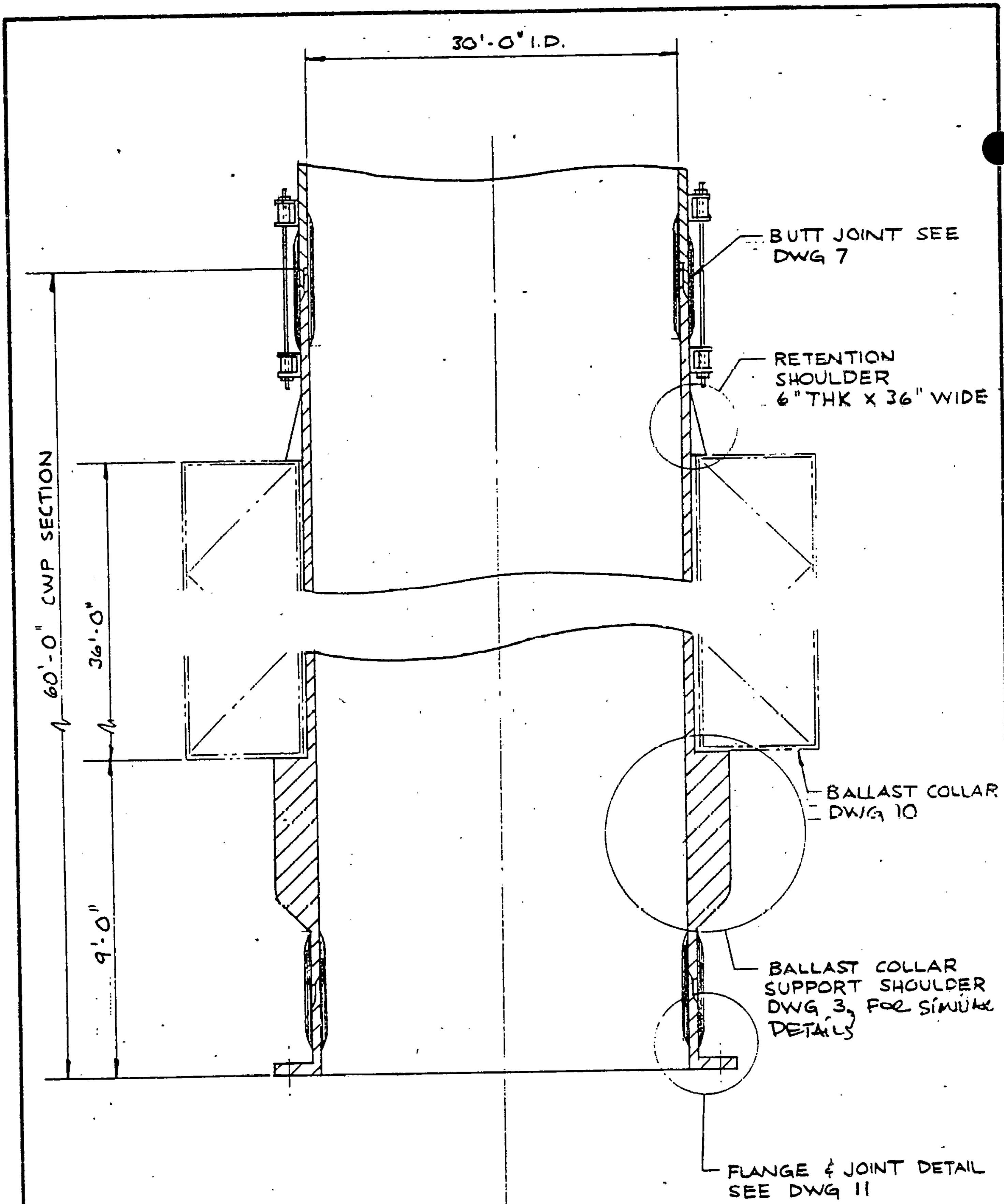

Fiberglass Structural Engineering | ETA | SPOOL W/ BALLAST COLLAR | DWG 9

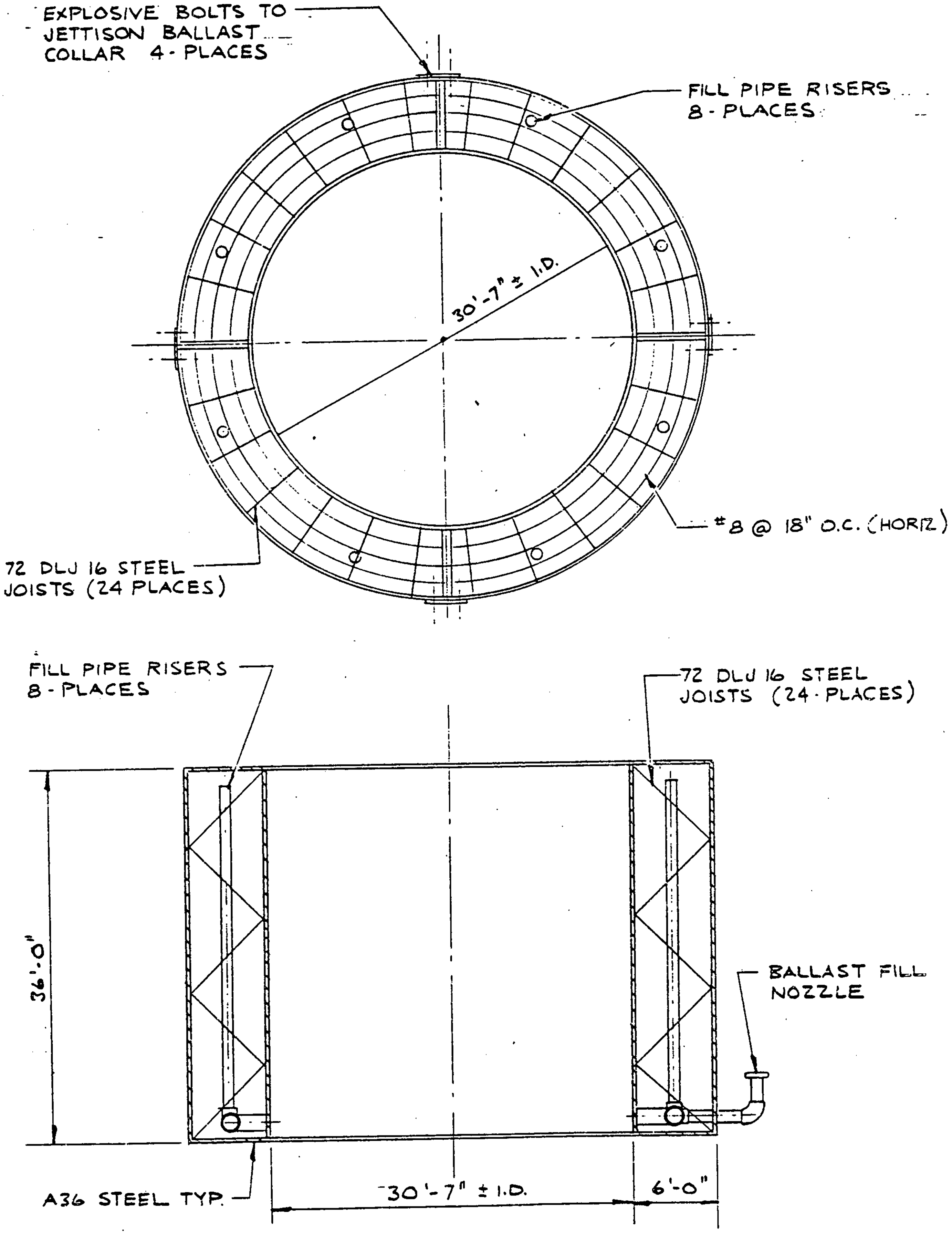

Fiberglass Structural Engineering	ETA	BALLAST COLLAR	DWG 10

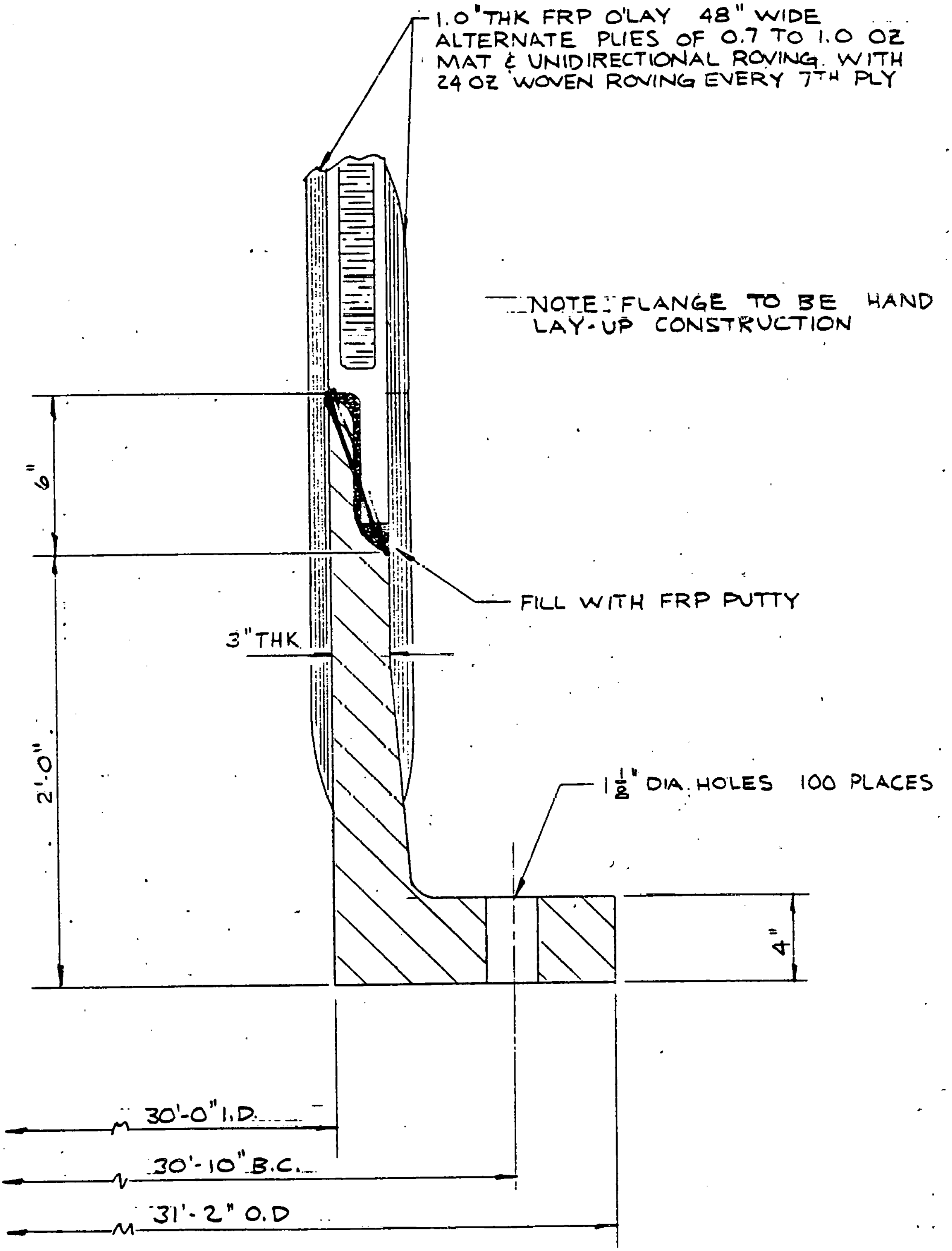

Fiberglass Structural Engineering	ETA	FRP DRILLED FLANGE	DWG 11

PLAN VIEW SEE DWG 13

NOTE: ENTIRE SCREEN
SECTION TO BE HAND
LAY-UP CONSTRUCTION

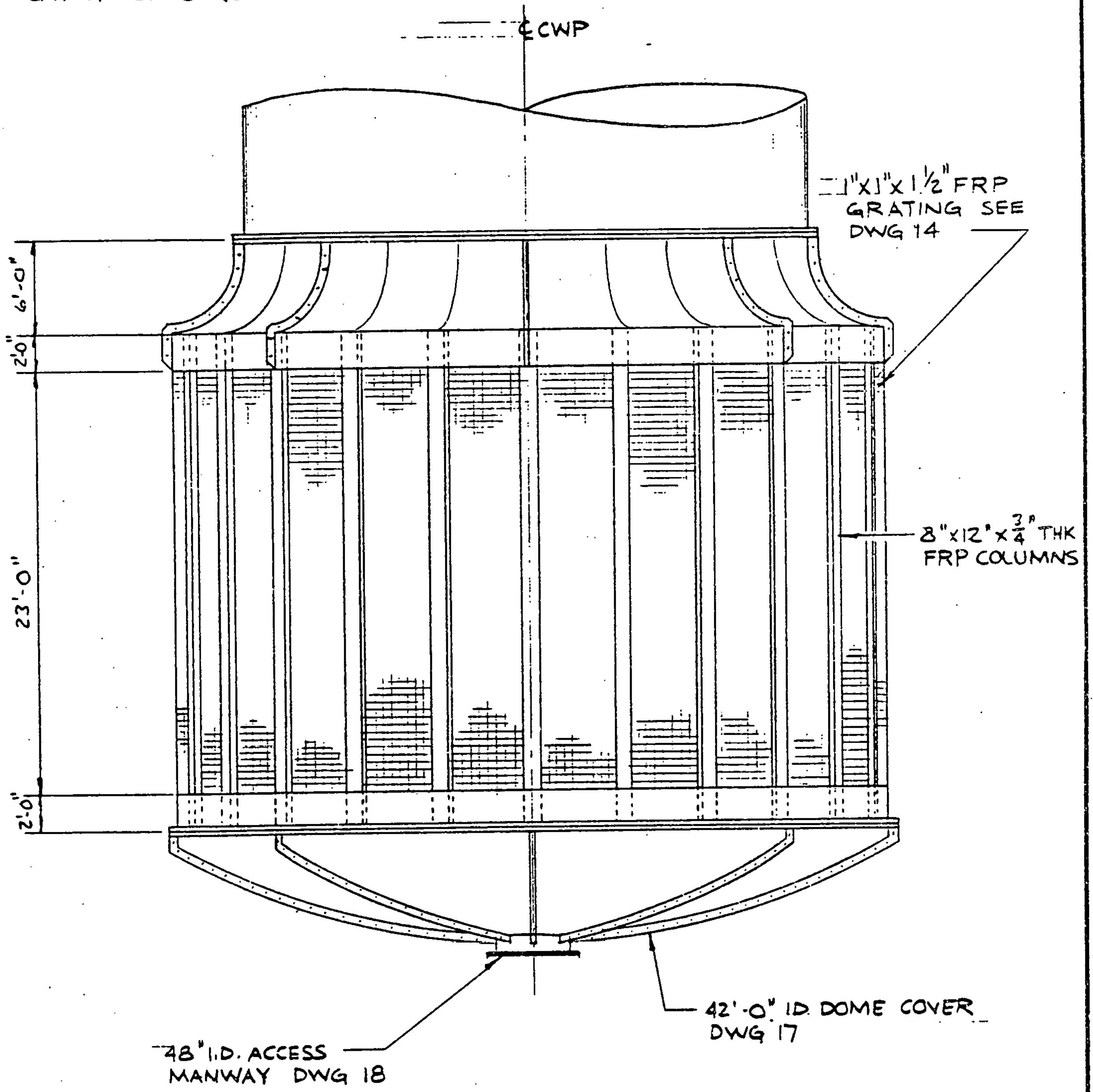

Fiberglass Structural Engineering	ETA	FRP SCREEN SECTION	DWG 12

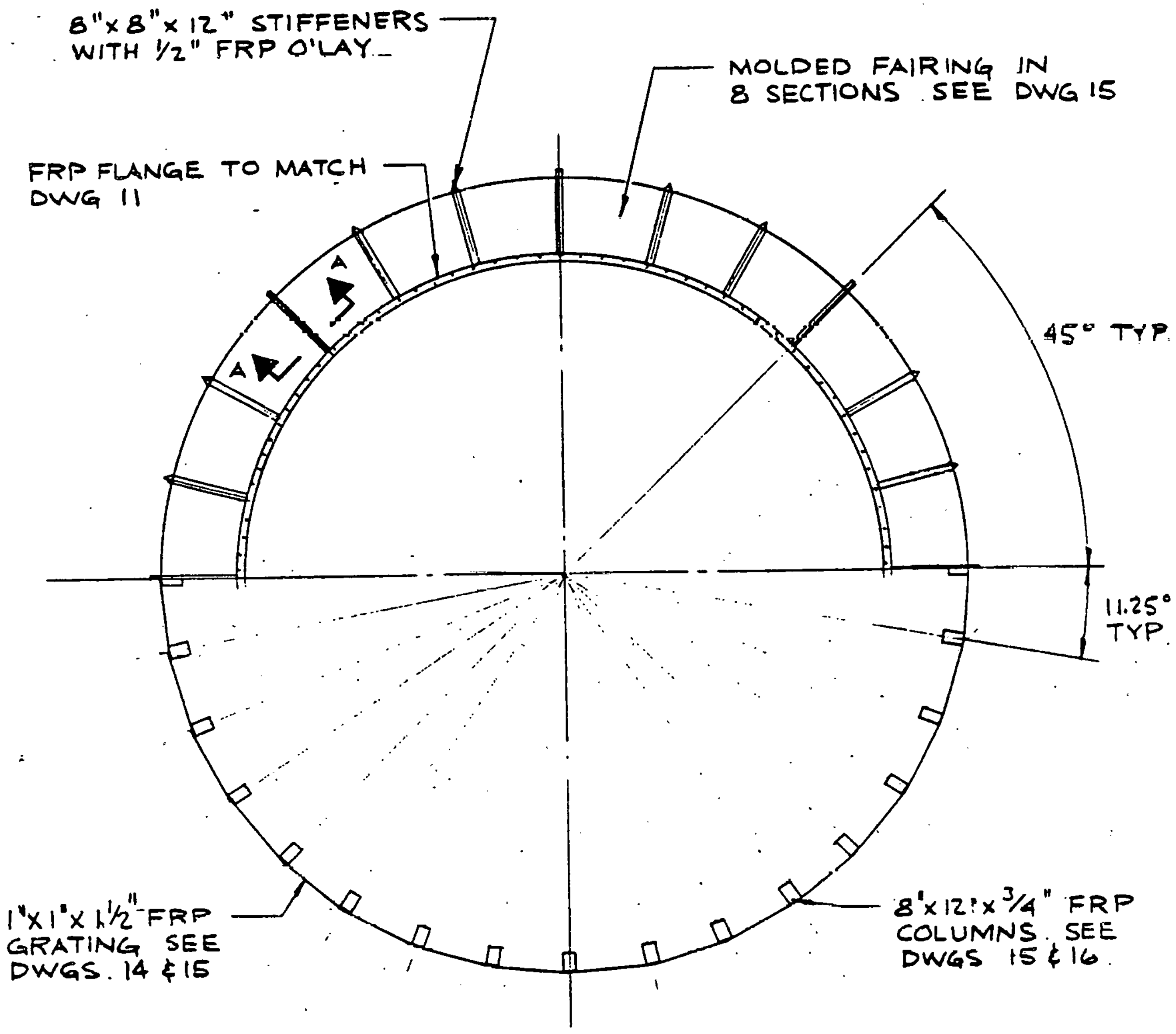

PLAN AND SECTION VIEW

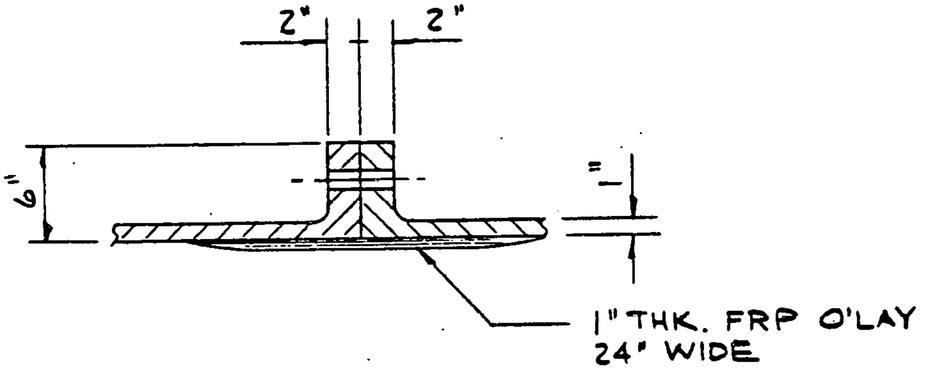

SECTION A-A

Fiberglass Structural Engineering	ETA	SCREEN SECTION - PLAN	DWG 13

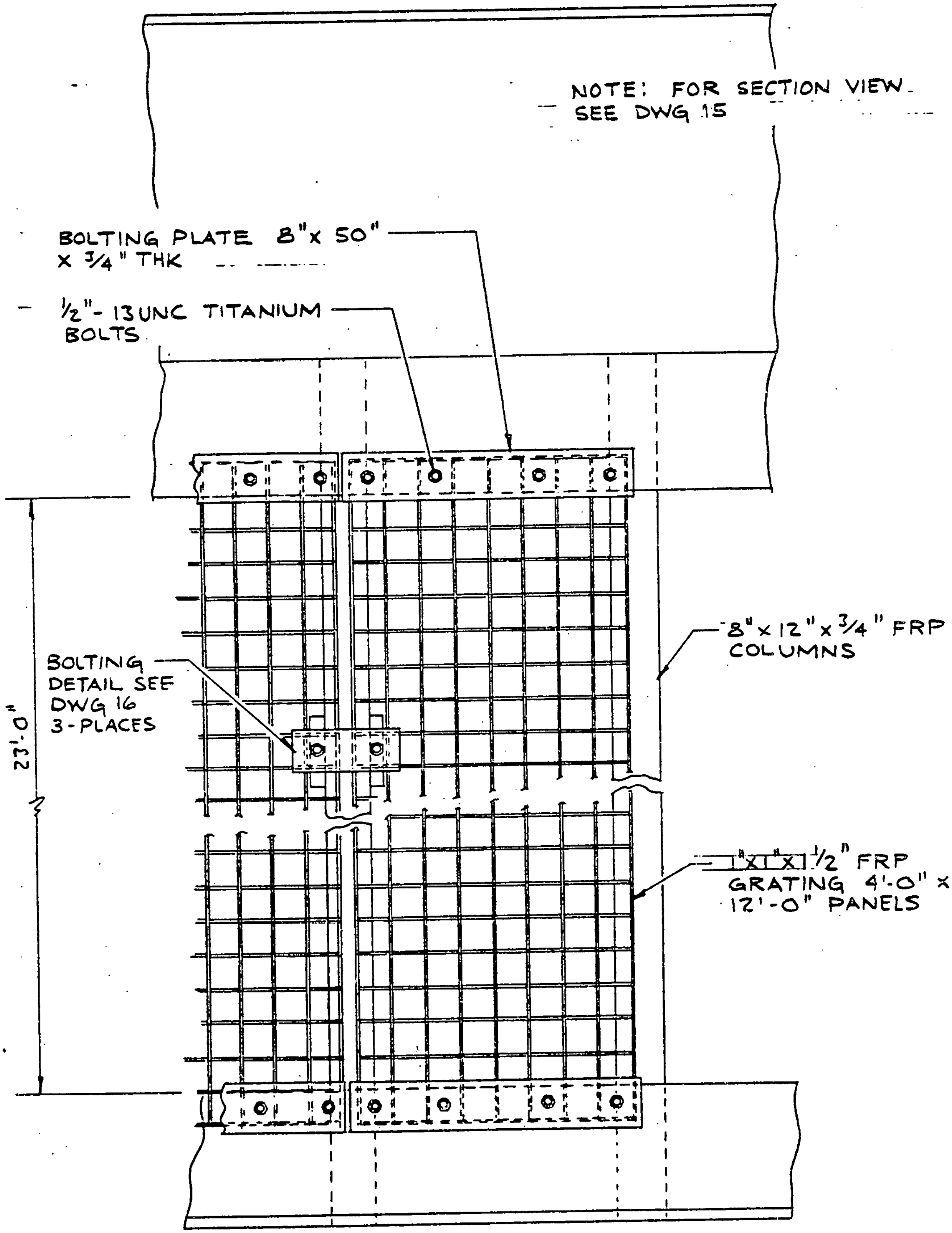

Fiberglass Structural Engineering	ETA	GRATING SCREEN DETAIL	DWG 14

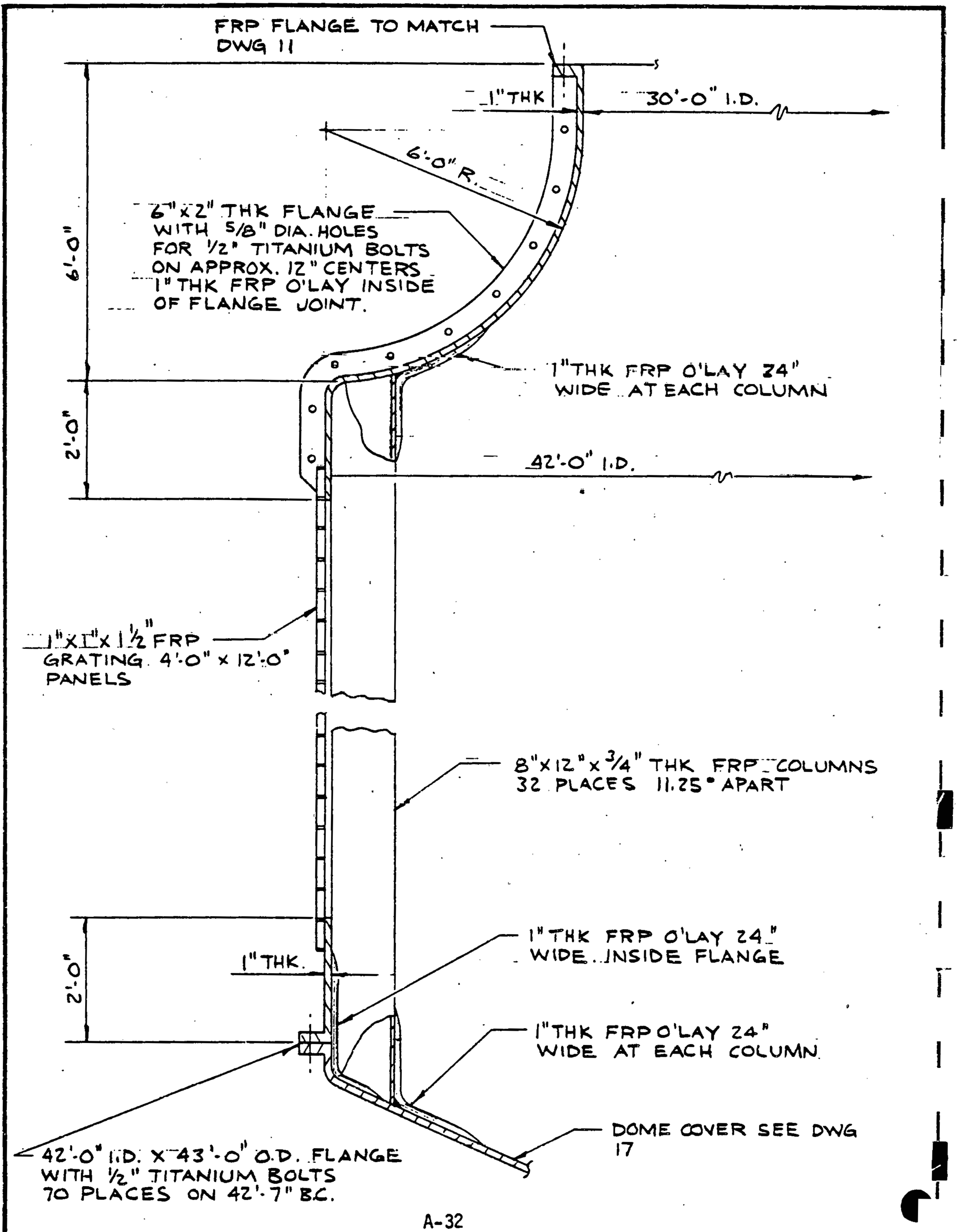

Fiberglass Structural Engineering	ETA	SCREEN CONSTRUTION	DWG 15

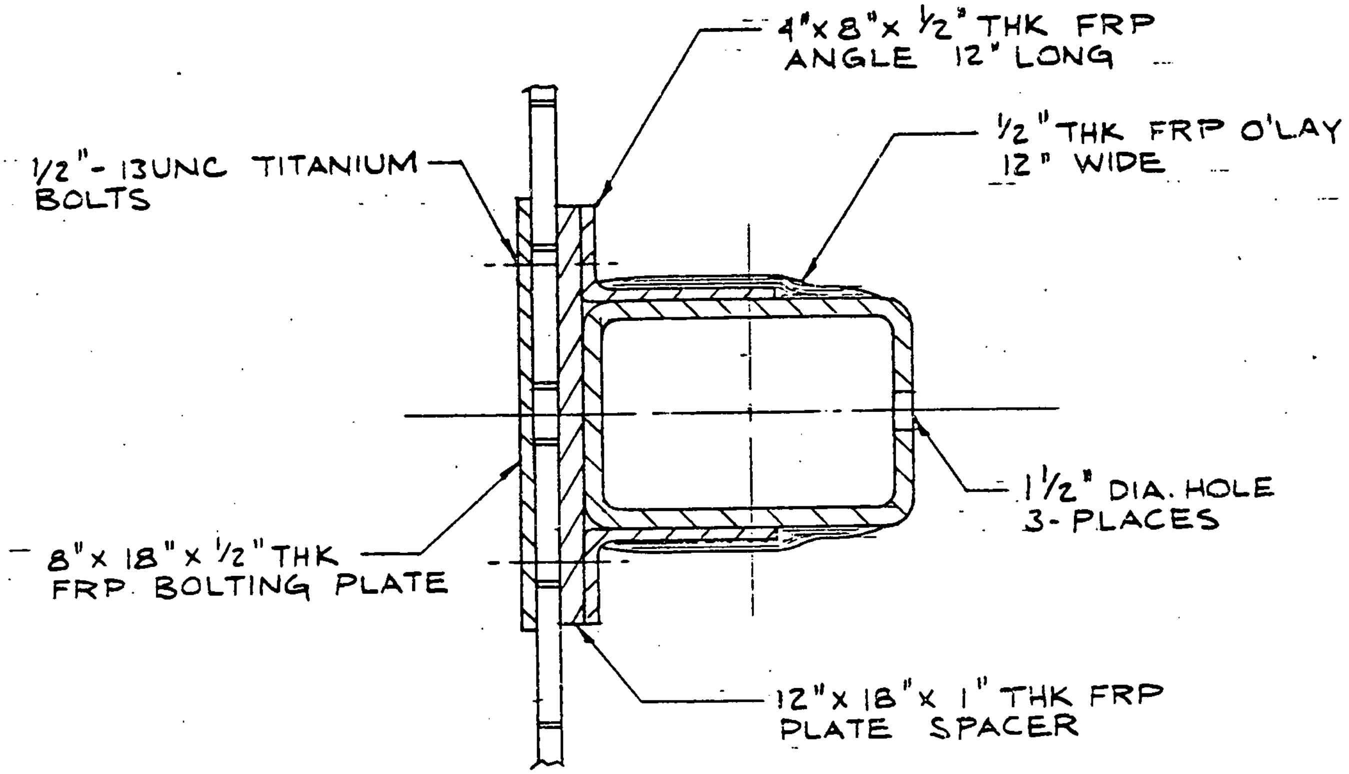

SECTION THRU GRATING CONNECTION

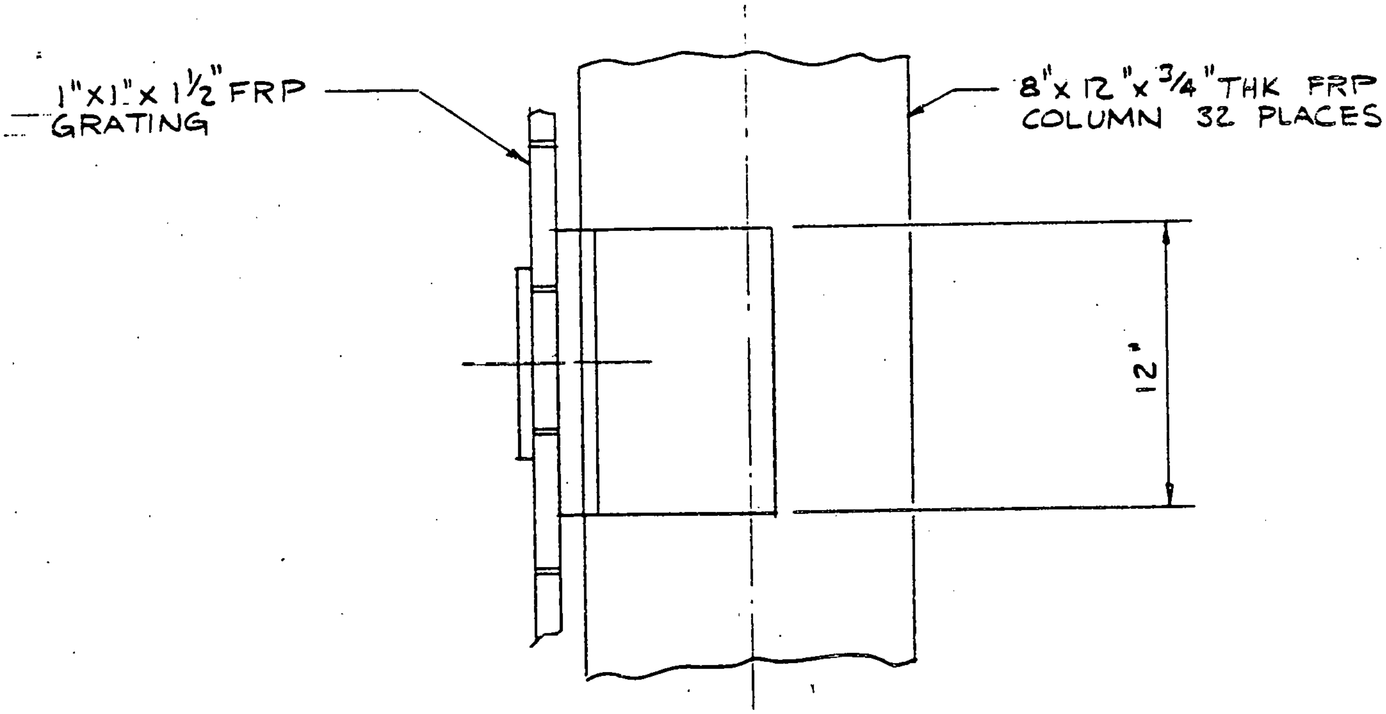

ELEVATION

Fiberglass Structural Engineering	ETA	GRATING ATTACHMENT	DWG 16

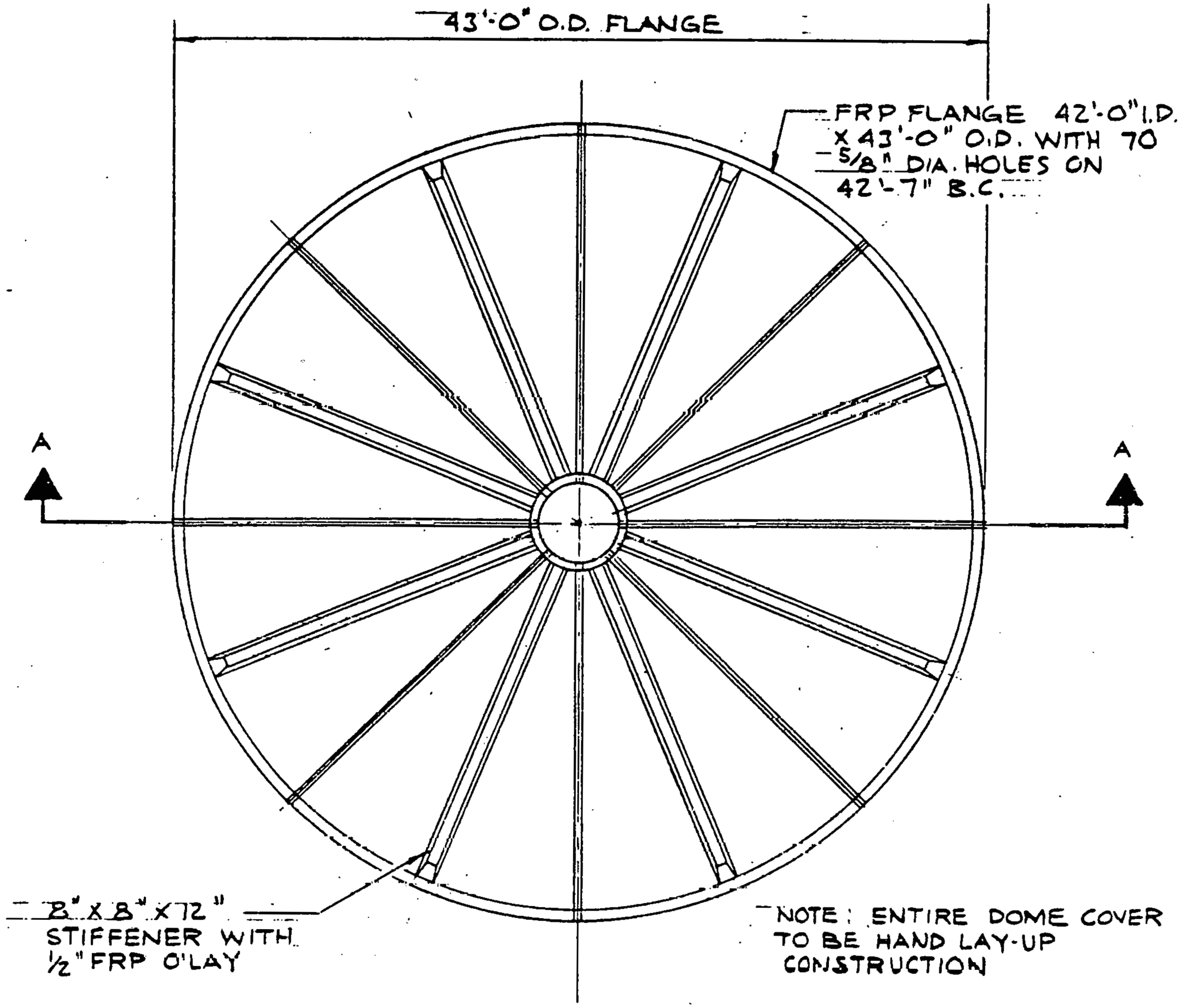

NOTE: ENTIRE DOME COVER TO BE HAND LAY-UP CONSTRUCTION

PLAN

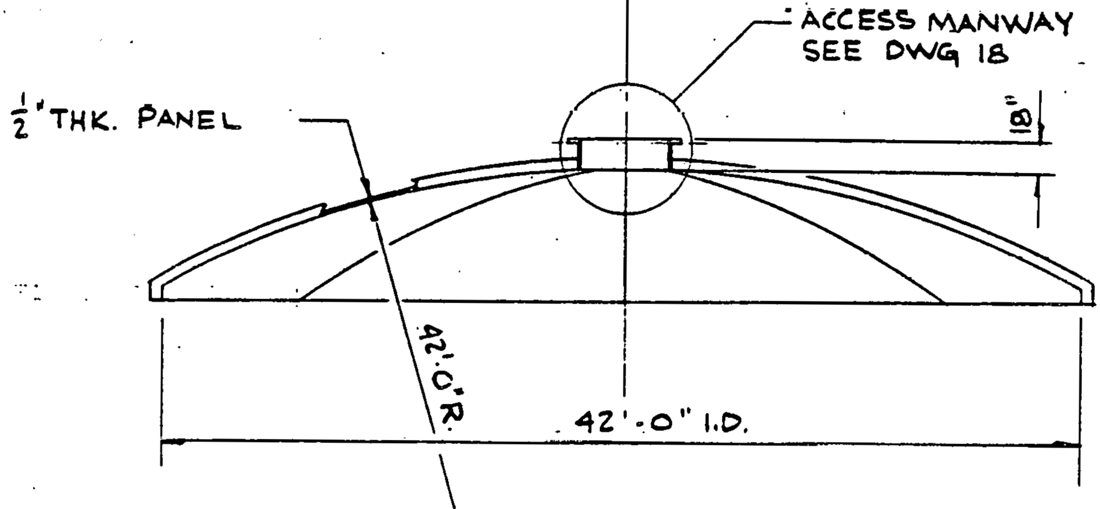

SECTION A-A

Fiberglass Structural Engineering	ETA	SCREEN SECTION DOME	DWG 17

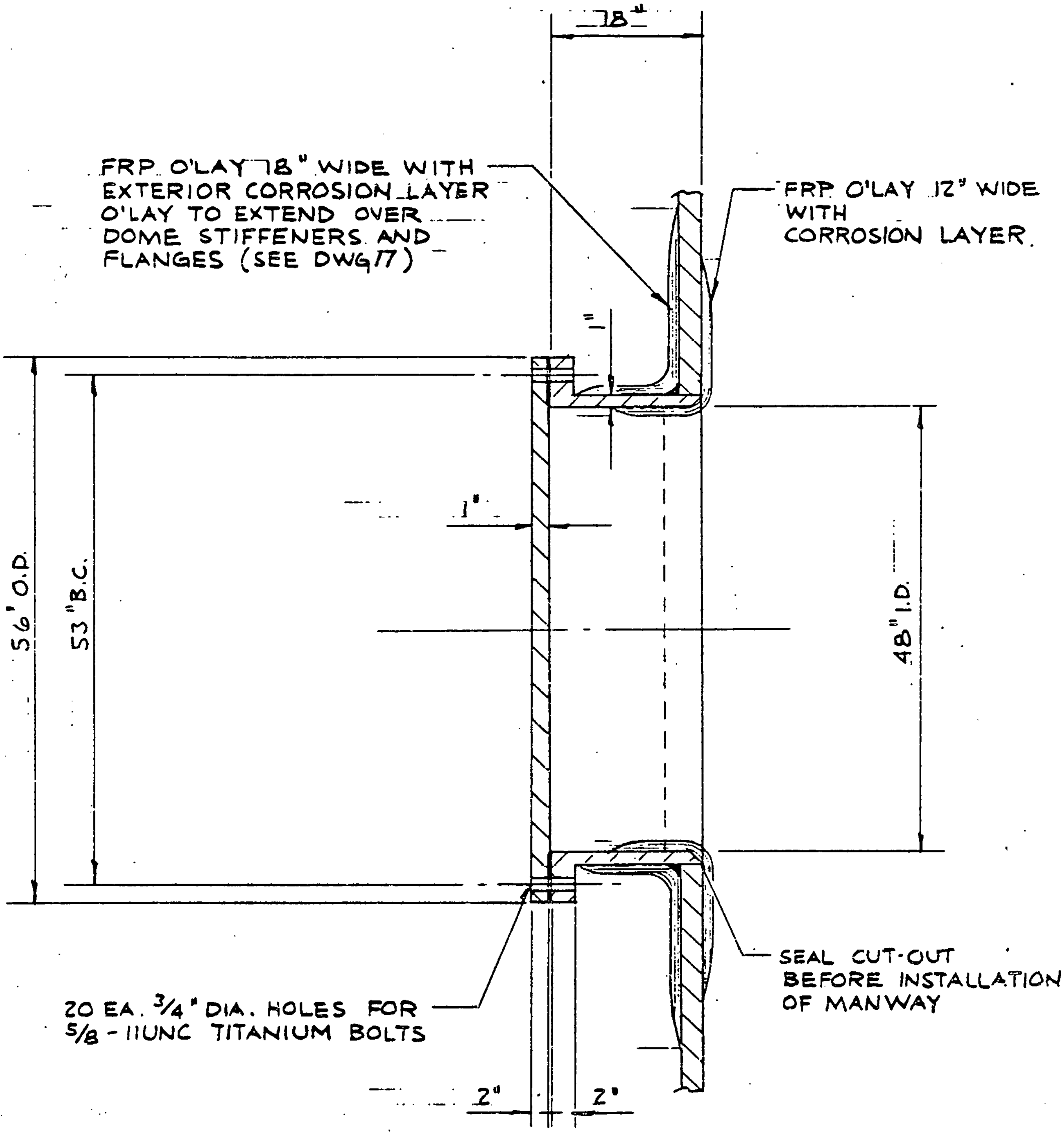

Fiberglass structural engineering	ETA	ACCESS MANWAY	DWG 18

NOTE: TWO DOME COVERS ARE
REQUIRED FOR DEPLOYMENT

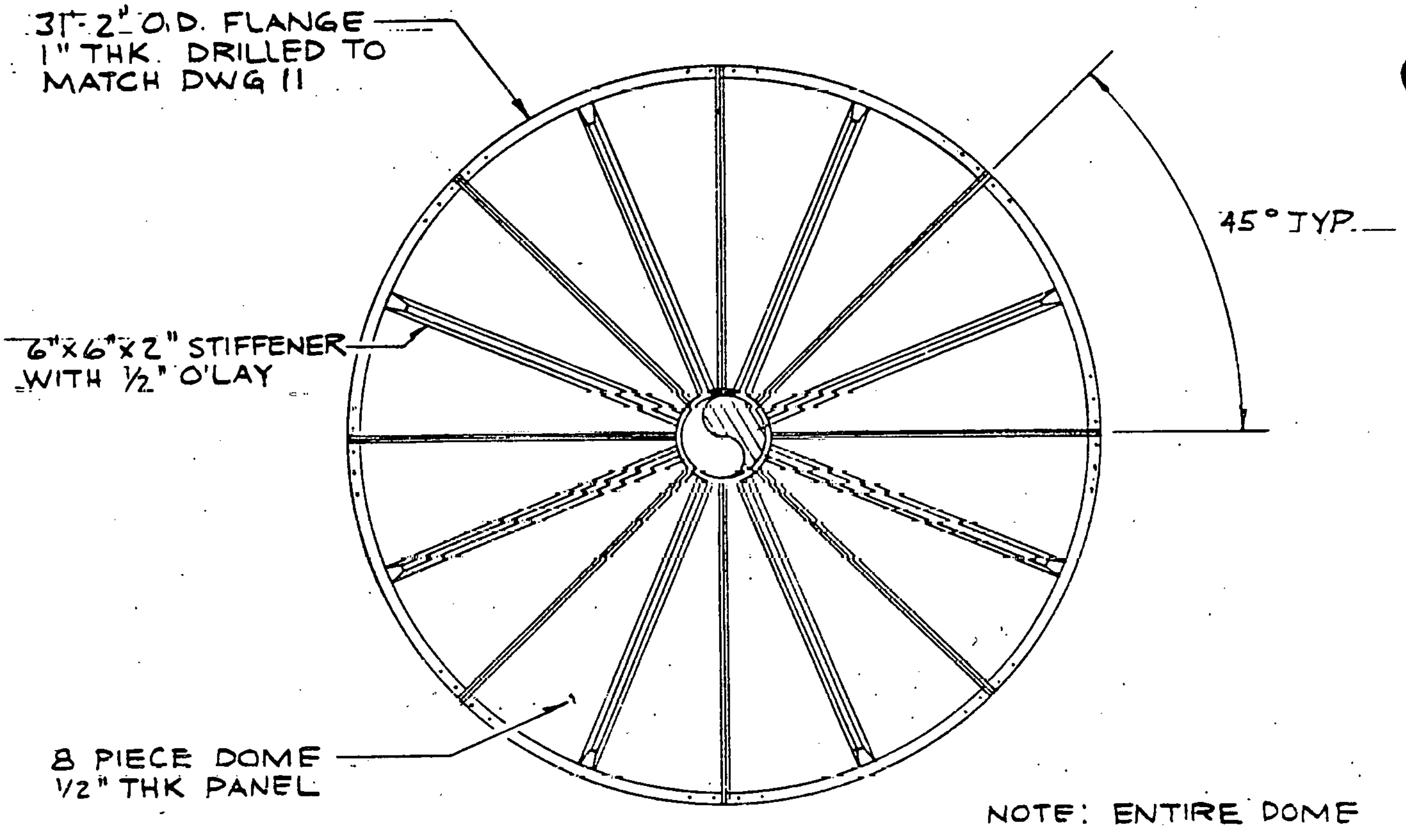

NOTE: ENTIRE DOME
COVER TO BE HAND
LAY-UP CONSTRUCTION

PLAN

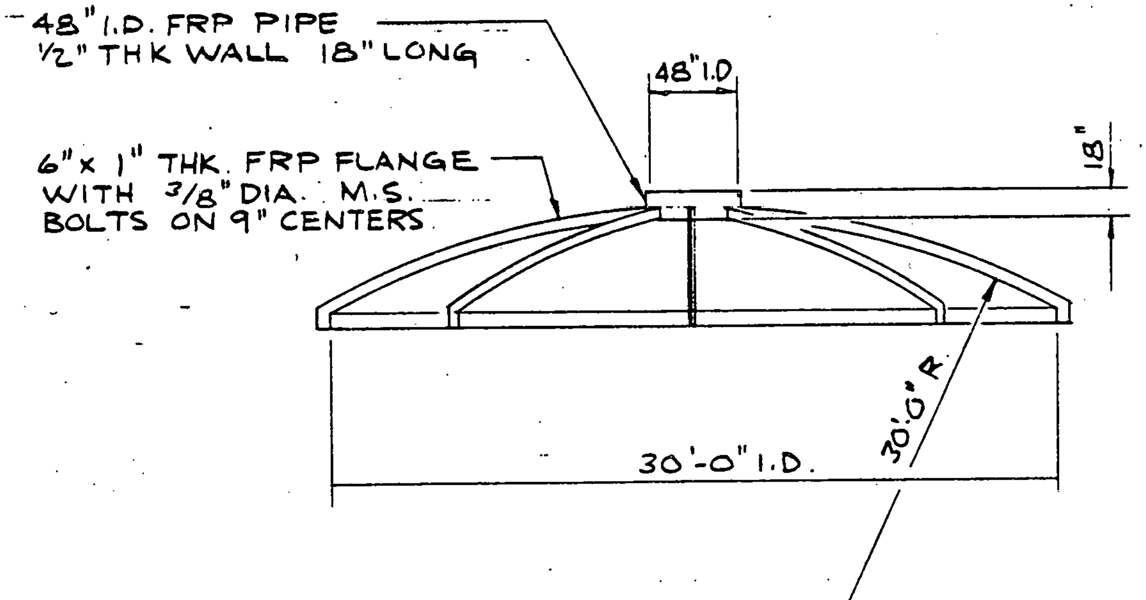

FIBERGLASS STRUCTURAL ENGINEERING	ETA	DEPLOYMENT DOME	DWG 19

APPENDIX B

SPECIFICATION FOR HIGH DENSITY POLYETHYLENE COLD WATER PIPE SYSTEM

CONTENTS

SPECIFICATION FOR HIGH DENSITY POLYETHYLENE
COLD WATER PIPE SYSTEM

1. SCOPE

This specification covers the polyethylene cold water pipe (CWP system for a 40 MW_e Ocean Thermal Energy Conversion modular demonstration plant. Included are requirements for materials, workmanship, delivery, assembly, inspection and quality assurance qualifications requirements for the pipe manufacturer and the contractor constructing the CWP system from such pipe as are also included. The pipe manufacturer shall supply all technical support necessary to insure that the CWP system will satisfy all requirements included herein.

2. GENERAL DESCRIPTION

The potential shortages of fossil fuels and the growing cost of nuclear fission power plants have stimulated the Department of Energy into research and development of the practicality of utilizing the vast undepletable resource of solar energy. One method of harnessing solar energy, originally conceived by the French physicist Jacques d'Arsonval in 1881, is Ocean Thermal Energy Conversion (OTEC). OTEC plants utilize the existing thermal gradients of oceans to operate a heat engine (for generation of electricity or to provide prime power for an industrial application) using the warm surface waters in the tropic oceans as a high-temperature reservoir and the colder water existing at greater depths as a low-temperature reservoir to produce work. The CWP specified by this specification will be used to upwell cold seawater in excess of 2 million gallons of water per minute from an ocean depth of 3280-feet for a 10/40 MW_e modular plant.

The OTEC power system is based on a Rankine thermodynamic cycle, utilizing a volatile working fluid, such as ammonia, which vaporizes and condenses over small temperature ranges in a closed system. The working fluid is vaporized by the warm surface seawater in the evaporator heat exchanger. The vapor passes through a low-pressure turbogenerator to generate electrical power either for transmission to shore or for direct in-situ usage in an associated, energy-intensive manufacturing, processing plant (e.g., ammonia production for fertilizer on aluminum smelting). The vapor exhausted by the turbine flows through another heat exchanger where it is cooled and condensed back into a liquid. The condensed working fluid works its way around the closed system to the evaporator, where the process begins all over again.

The CWP system consists of an approximately 3200 foot long cluster of seven, 12-foot internal diameter, solid wall high density polyethylene pipes. The pipes consist of three elements, approximately 1100-feet in length, of constant thickness. The pipes are attached to a common steel transitions section. The pipe assembly is supported by a gimbal attachment to the OTEC plant.

3. REFERENCE SPECIFICATIONS AND STANDARDS

The following specifications and standards (and those referenced within each) shall henceforth be considered a part of this document:

ASTM D-696	Test for Coefficient of Linear Thermal Expansion of Plastics
ASTM D-1505	Test for Density of Plastics by the Density Gradient Technique
ASTM D-638	Test for Tensile Properties of Plastics
ASTM D-1248	Polyethylene Plastics Molding and Extrusion Materials
ASTM D=2240	Test for Rubber Property - Durometer Hardness
ASTM D-1693	Test for the Environmental Stress-Cracking of Ethylene Plastics
ASTM D-746	Test for Brittleness Temperature of Plastics and Elastomers by Impact Test
ASTM D-1238	Flow Rates of Thermoplastics by Extrusion Plastometer
ASTM D-2657	Heat Joining of Thermoplastic Pipe Fittings
29 CFR 1910	United States Department of Labor Occupational Safety and Health Standards

Unless otherwise noted, the document with agenda, amendments, and revisions in effect on the date of the purchase order shall apply. All miscellaneous material furnished in accordance with this specification shall comply with all federal and state laws and local ordinances of the place of installation. Where this specification and any referenced document conflict on requirements, the more severe shall govern.

4. QUALITY ASSURANCE

4.1 Project Management. The project management tool commonly called Critical Path Scheduling (CPS) shall be employed by the contractor for planning, scheduling and reporting all work required by the Contract Documents. The Precedence Method (Activity on Node) on Critical Path Scheduling shall be used. The Precedence Method shall be interpreted as outlined in the Integrated Civil Engineening Systems, Project/2 Basis Manual.

The contractor shall submit for approval of the Contracting Officer a network diagram describing the activities to be accomplished in the project and their dependency relationships as well as a tabulated schedule. The schedule produced and submitted shall indicate a project completion date on or before the Contract Completion Date. The initial schedule shall include the following minimum data for each activity:

Activity Beginning and Ending Event Numbers

Estimated Duration

Activity Description

Early Start Date (Calendar Dated)

Early Finish Date (Calendar Dated)

Latest Allowable Start Date (Calendar Dated)

Latest Allowable Finish Date (Calendar Dated)

Status (Whether Critical)

Total Float

The network diagram and tabulated schedule when approved by the Contracting Officer shall constitute the Project Work Schedule until a revised schedule is submitted due to delays beyond the control and without the fault or negligence of the contractor.

4.2 Qualification of Pipe Manufacturer and Contractor. The contractor will show past experience in the field application of large diameter, polyethylene pipe. The pipe manufacturer is to provide backup data supporting actual experience in manufacturing large polyethylene pipe of this specific size. Also, information relating to past experience in making both factory and field fusion bonds is to be presented along with information on the resulting material characteristics, including strength, of such joints. Discussion of inspection techniques, with indication of their effectiveness, is also to be included. The pipe manufacturer and contractor shall indicate in their proposal the extent of compliance of materials they intend to provide to the requirements of this specification. They shall also list in their proposal any exceptions to this specification or to the standards referenced herein, or to any other codes or standards, the intent of which is in conflict with this specification or the standards referenced herein.

A statement of CPS capability shall be submitted in writing prior to the award of the contract and will verify that either the contractor's organization has "in-house capability" qualified to use the technique or that the contractor employs a consultant which is so qualified.

"Capability" shall be verified by description of construction projects to which the contractor or his consultant has successfully applied CPS and shall include at least two projects which were controlled throughout the duration of the project by means of periodic systemateic review of the CPS schedule.

5. MATERIALS

5.1 Polyethylene Pipe Materials. The polyethylene pipe material shall be a high density polyethylene (HDPE) per ASTM D-1248, Type III, Class C, Category 5, Grade P34. The raw material shall contain an effective antioxidant.

The polyethylene raw material shall be supplied from the least possible number of individuals production lots in order to simplify the control of pipe product quality. All records of pipe material production and quality control, identified to each production lot reference batch shall be obtained, and kept, by the pipe supplier. Two copies of all reports of resin batch identificatio marks shall be forwarded to the contracting office on the same day each pipe material lot is received at the pipe fabrication plant.

The polyethylene pipe resin shall satisfy the mechanical properties defined in Table 1. All applicable ASTM test methods are designated.

5.2 Material Certification. Compliance to all the materials requirements shall be certified in writing by the pipe manufacturer. Two copies of all reports on quality control tests of mechanical properties that are conducted by the pipe manufacturer shall be forwarded to the contracting agency office. The pipe manufacturer shall notify the contracting office of any noncompliance to the specified mechanical properties directly upon the determination of such non-compliance.

6. PIPE MANUFACTURE

6.1 General Requirements. The CWP system shall consist of a cluster of seven 12-foot internal diameter by 3204-feet long of solid wall high density polyethylene pipes. The individual pipes will consist of three elements, each 1068 feet in length and of constant wall thickness. Pipes shall be manufactured with a constant internal diameter. The individual pipe elements shall be fabricated from length provided by the pipe manufacturer. Lengths shall be as long as practically permitted by the fabrication process, with a minimum length of 20 feet.

6.2 Tolerance. The pipe manufacturer shall provide all technical support and equipment necessary to insure control of pipe quality during its manufacture. Positive methods shall be used to insure that the pipe wall thickness is within the specified tolerances. Each pipe length shall be clearly marked. Marking information shall include pipe size, prefit number, and production code. The pipe manufacturer shall also indicate any limitations or constraints of his process that will not permit compliance to any of the requirements of this specification.

Techniques for manufacture of the pipes are considered to be state-of-the-art. However, particular areas that must be controlled during the pipe manufacturing process are:

- Pipe internal diameter of 12 minus .000 inch, plus 1.000 inch with a 3/16 mismatch
- Wall thickness tolerance shall be minus .000 inch, plus .500 inch with a 3/16 inch mismatch
- Workmanship - wall shall have minimal defects such as voids bubbles, cracks consistent with good manufacture
- Fusion joint quality - any pipe sections joined by the pipe manufacturer shall have proper diametrical alignment and have the required mechanical properties at the joint.

The pipe unit shall be manufactured by a technique which will assure defect free walls. The pipe shall be free from visual cracks, holes, or other defects. It shall be as uniform as commercially practical in color density and other physical properties. The pipe manufacturer shall test and certify his work to insure this control. If possible, a non-destructive test shall be employed to assure the mechanical integrity of the manufactured pipe wall material. The non-destructure test must be agreed upon by the contractor prior to initiation of the tests.

7. FABRICATION AND ASSEMBLY OF THE CWP SYSTEM

7.1 Handling. Manufacturing capabilities for the Cold Water Pipes shall include all activities required to extract individual pipe sections from the mandrels and placement of these onto a carrier for transport to an assembly area for final positioning before joining. Costs of development, design and construction of the pipe carrier and other associated fabrication equipment and buildings shall be borne by the contractor.

Positive measures will be taken at the time each pipe section is removed from the mandrel to protect it from damage caused by abrasion, inadvertant dropping, striking, being struck or other objects, breakage or distortion caused by mishandling or inadequate support. Any portion of pipe that does not meet the original manufactured condition will be rejected.

7.2 Welding. The individual pipe sections shall be joined together by butt-fusion welding in accordance with the general guidelines recommended in ASTM D-2657, Technique II. This process involves joining pipe butt ends by melting the aligned faces of the pipe ends in a suitable pipe joining apparatus, and pressing the melted ends together under a controlled pressure.

The butt-fusion weld integrity shall be such as to ensure a minimum tensile yield equal to that of the pipe wall. If possible, a non-destructive test method shall be used to inspect all welds on a 100 percent basis. The testing method must be agreed upon by the contracting agency prior to initiation of the tests. The butt-fusion joints shall conform to the dimensions and tolerances specified in Section 6.0 for the pipe diameter.

The specified detailed schedule for welding conditions and the welding machinery specifications shall be supplied by the pipe manufacturer. The procedures shall be approved by the contracting agency prior to actual pipe fabrication. The pipe manufacturer shall be responsible for assuring that the recommended welding procedures meets the minimum requirements recommended by the polyethylene material supplier for butt-fusion welding of their material. The pipe manufacturer must test and certify that when butt-fusion is carried out according to his recommendations the welds and adjacent pipe material will meet the required material properties specified in Section 5.0.

8. DELIVERY

The pipe shall be shipped to and stored at a location furnished by the contractor. This location will be in the vicinity of Punta Tuna on the island of Puerto Rico. The pipe manufacturer will supply trucking to site. The contractor will be responsible for the unloading and all subsequent operations in accordance with pipe manufacturer's recommendations.

The pipe manufacturer shall make provisions to insure that the pipe is not damaged or deformed during shipment and delivery to the site. Any damaged pipe shall be rejected as scrap material and disposed of by the vendor.

9. QUALITY CONTROL AND TESTING

The pipe manufacturer shall provide all qualified supervisory and inspection personnel to oversee and be present during field pipe fabrication and joining processes. A quality inspection procedure for field work shall be developed and provided to the contractor within four weeks after receipt of the purchase specification.

The pipe manufacturer shall submit a qualification test program for the qualification of field personnel. The qualification program must be approved by the contractor prior to initiation of pipe manufacturer. The pipe manufacturer shall maintain a quality assurance program acceptable to the contracting agency during the pipe manufacturing process. Traceability from original source material to final product is required.

The testing and quality control of the pipe material shall be as described for the materials in Section 5.0. The testing and quality control of the assembly process shall be as described in Section 7.0. If a non-destructive test method is used the maximum number and size, as well as the distribution of the pipe wall defects allowed shall constitute the basis of acceptance or rejection of each pipe section. The maximum number, size, and distribution of pipe wall defects shall be agreed upon by the contracting agency within four weeks after receipt of the purchase specification.

10. POLYETHYLENE CWP DESIGN DRAWINGS

The following pages are the Polyethylene CWP Design Drawings.

PREPARED L.R. MORTALONI 4 AUG 1977 REPORT NO. PAGE

CHECKED

MODEL

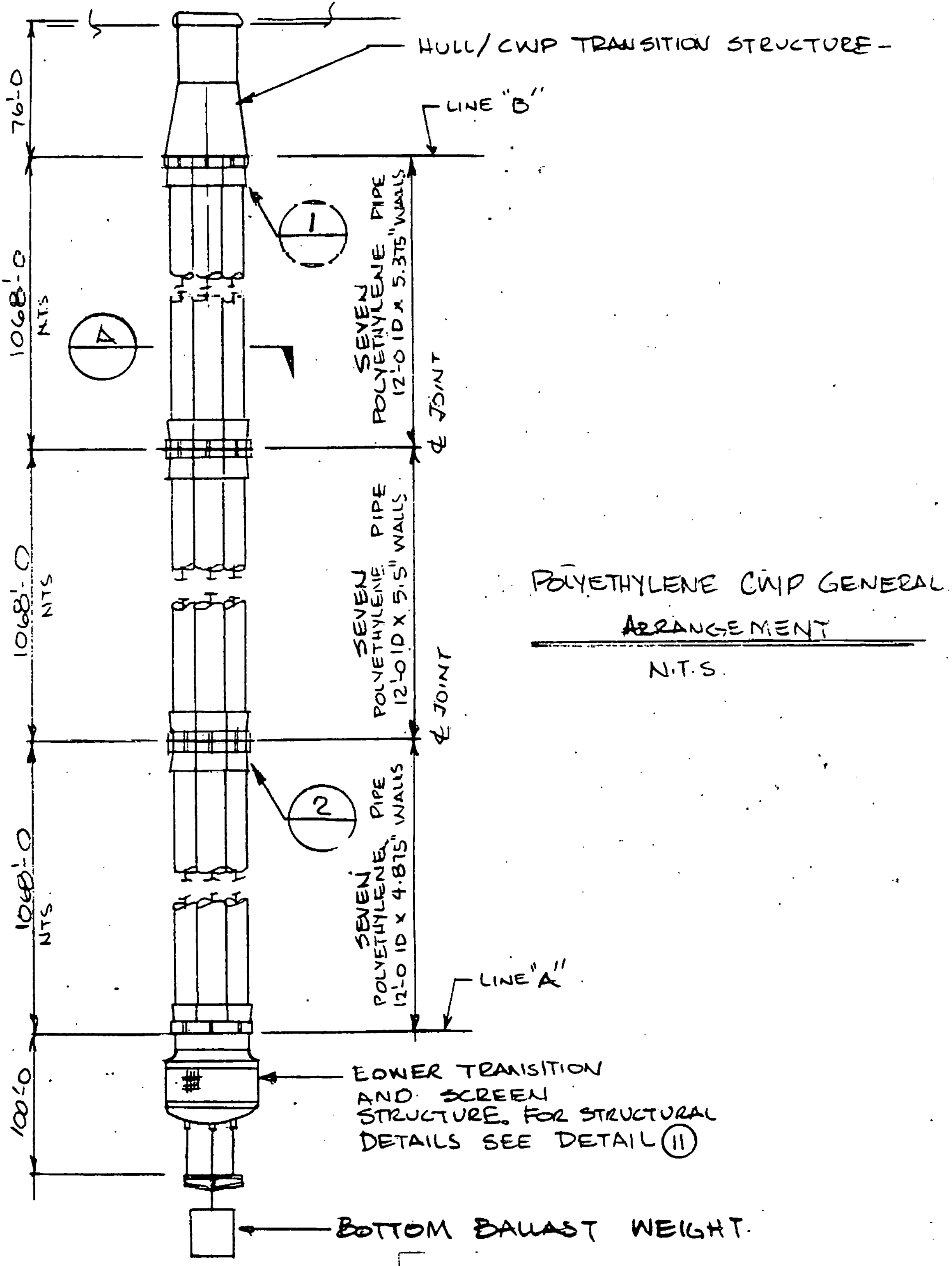

POLYETHYLENE CWP GENERAL ARRANGEMENT

N.T.S.

PREPARED L.R. MORTALONI

CHECKED

MODEL

REPORT NO.

PAGE

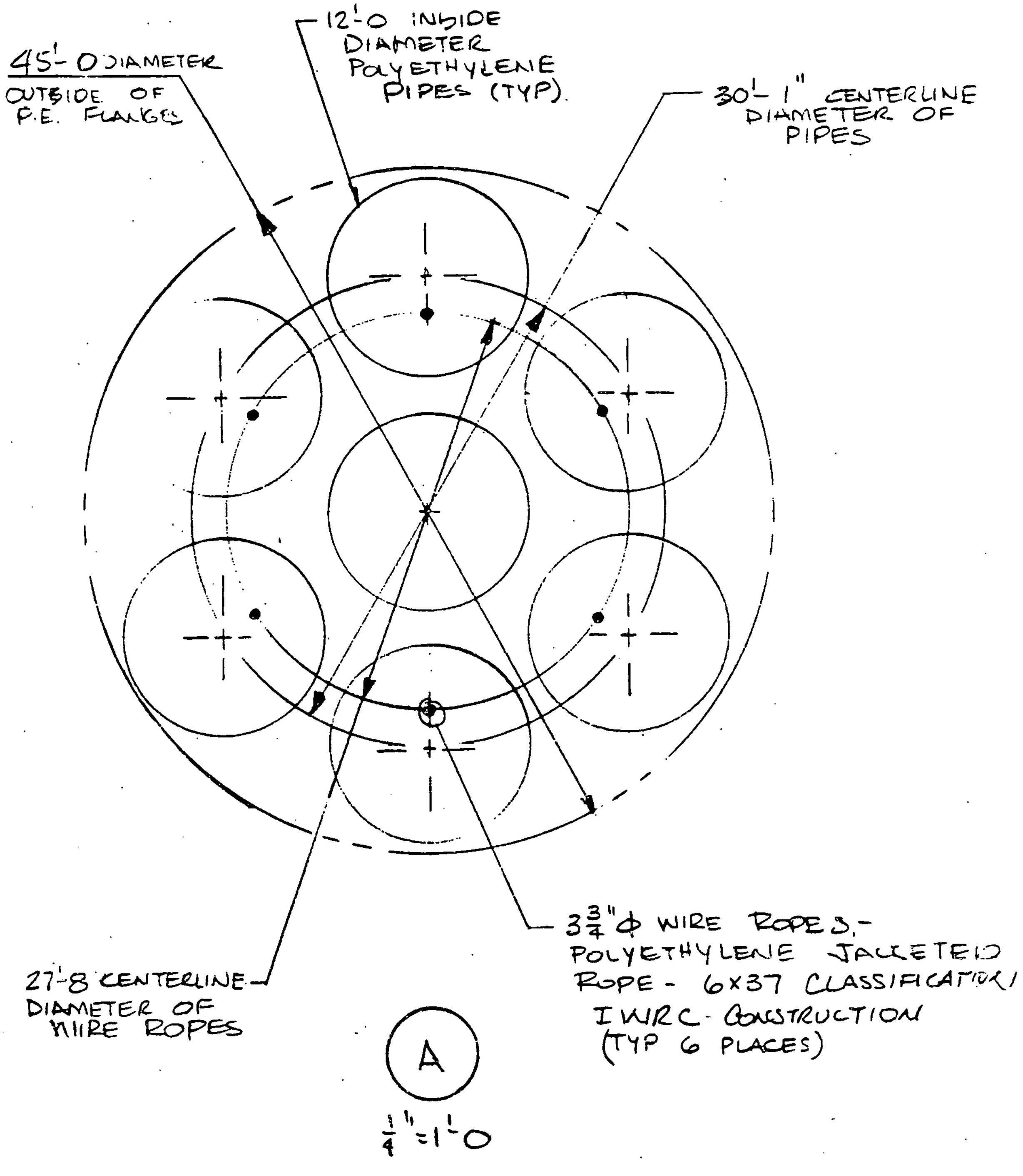

PREPARED L.R. MORTALONI
CHECKED
MODEL
REPORT NO.
PAGE

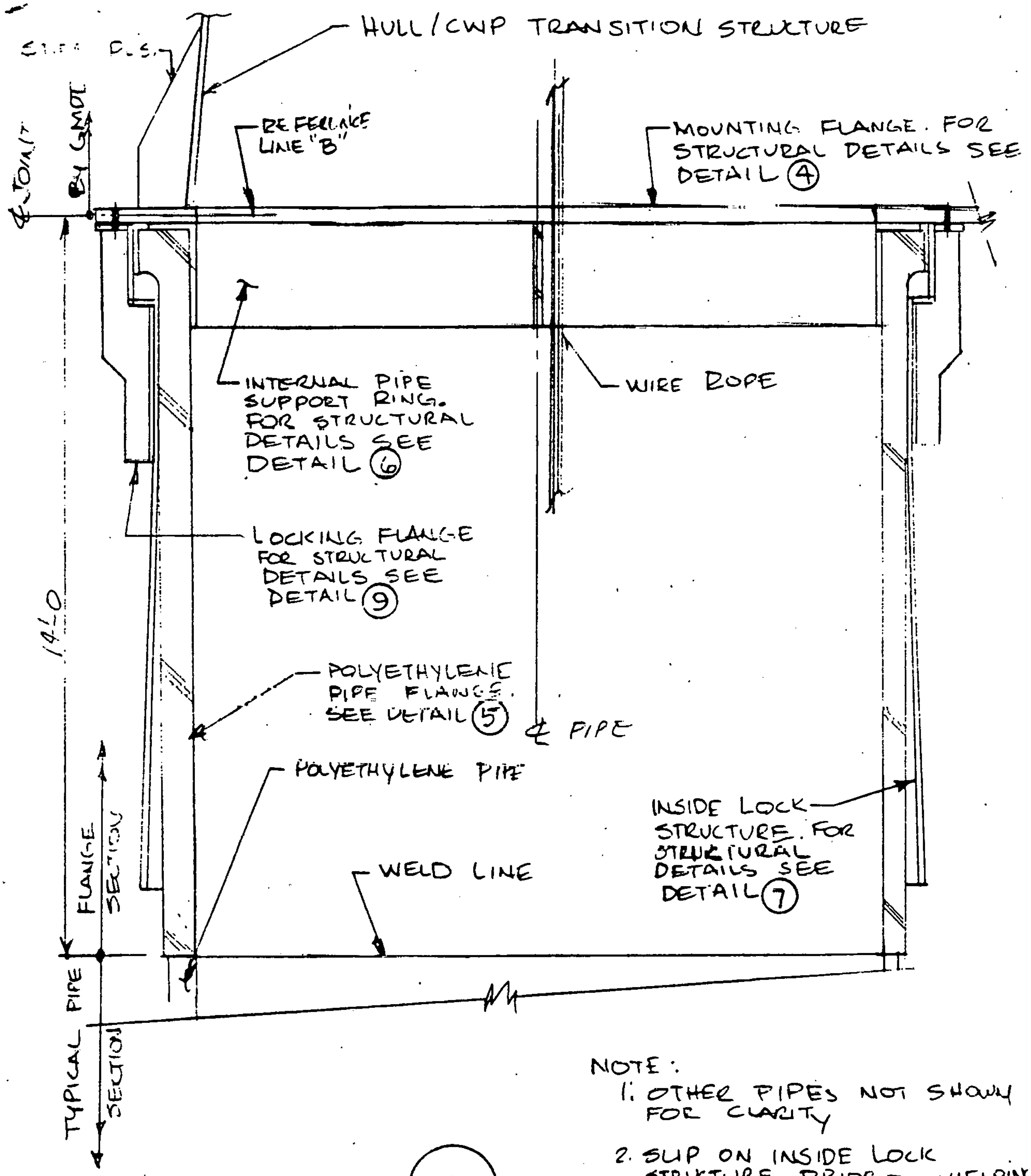

NOTE:
1. OTHER PIPES NOT SHOWN FOR CLARITY
2. SLIP ON INSIDE LOCK STRUCTURE PRIOR TO WELDING OF POLYETHYLENE PIPES. TRIM POLYETHYLENE PIPES AS REQUIRED FOR FOR TIGHT FIT

①
3/8" = 1'-0

PREPARED L.R. MORTALONI
CHECKED
MODEL
REPORT NO.
PAGE

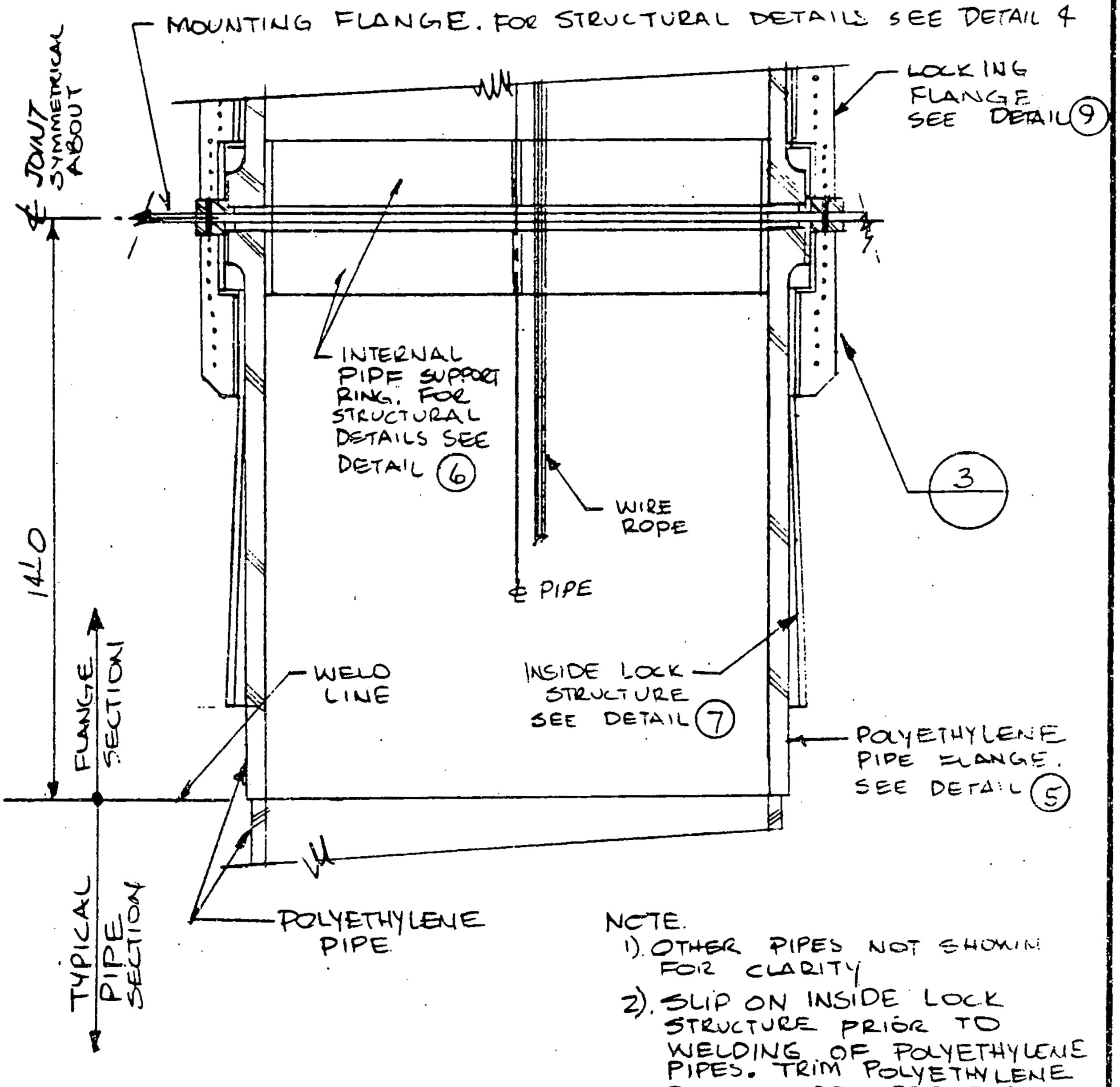

NOTE.
1). OTHER PIPES NOT SHOWN FOR CLARITY
2). SLIP ON INSIDE LOCK STRUCTURE PRIOR TO WELDING OF POLYETHYLENE PIPES. TRIM POLYETHYLENE PIPES AS REQUIRED FOR TIGHT FIT.

②

$\frac{1}{4}" = 1'-0$

PREPARED L.R. MORTALONI

CHECKED

MODEL

REPORT NO.

PAGE

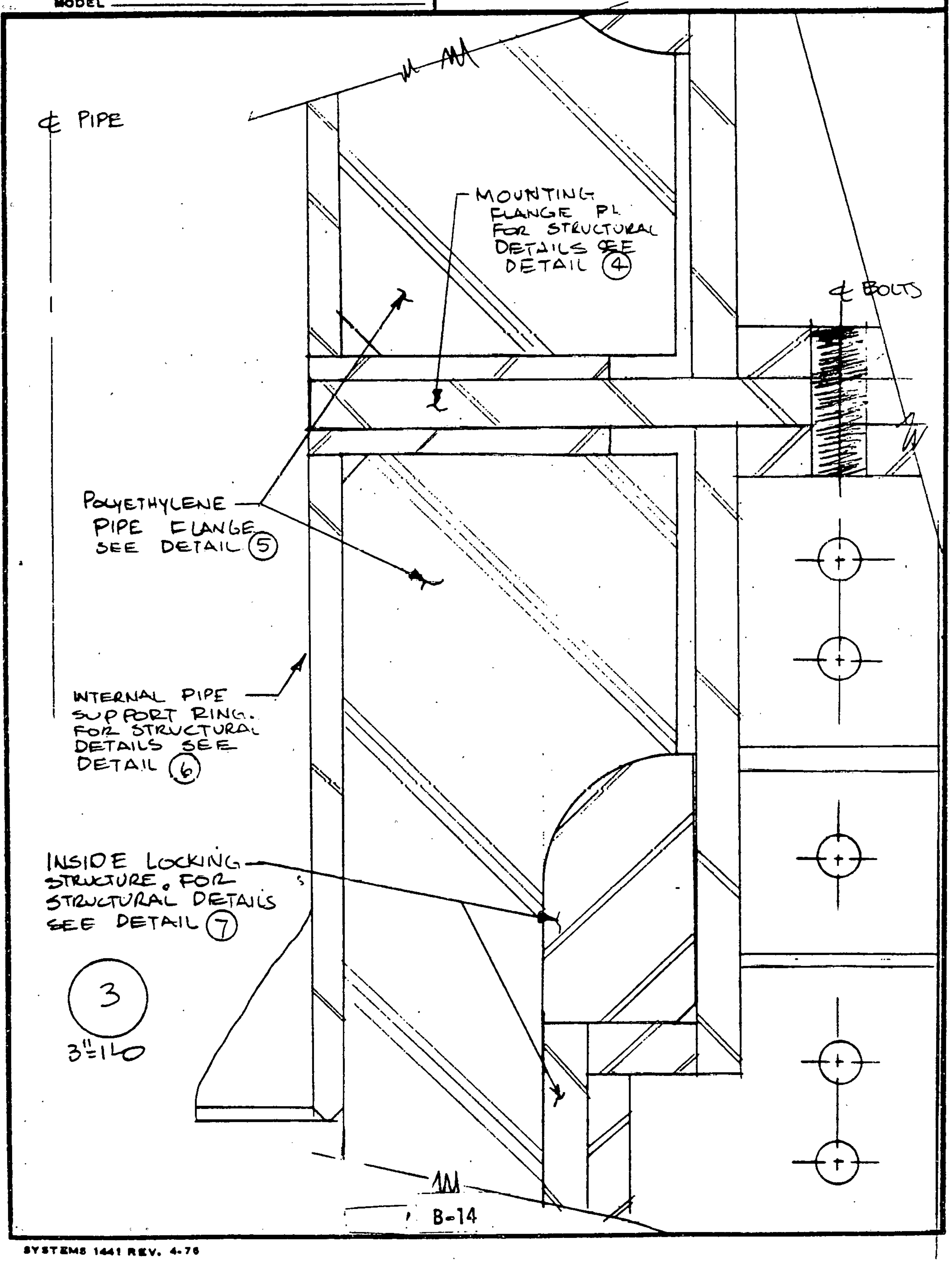

PREPARED L. R. MORTALONI
CHECKED
MODEL
REPORT NO.
PAGE

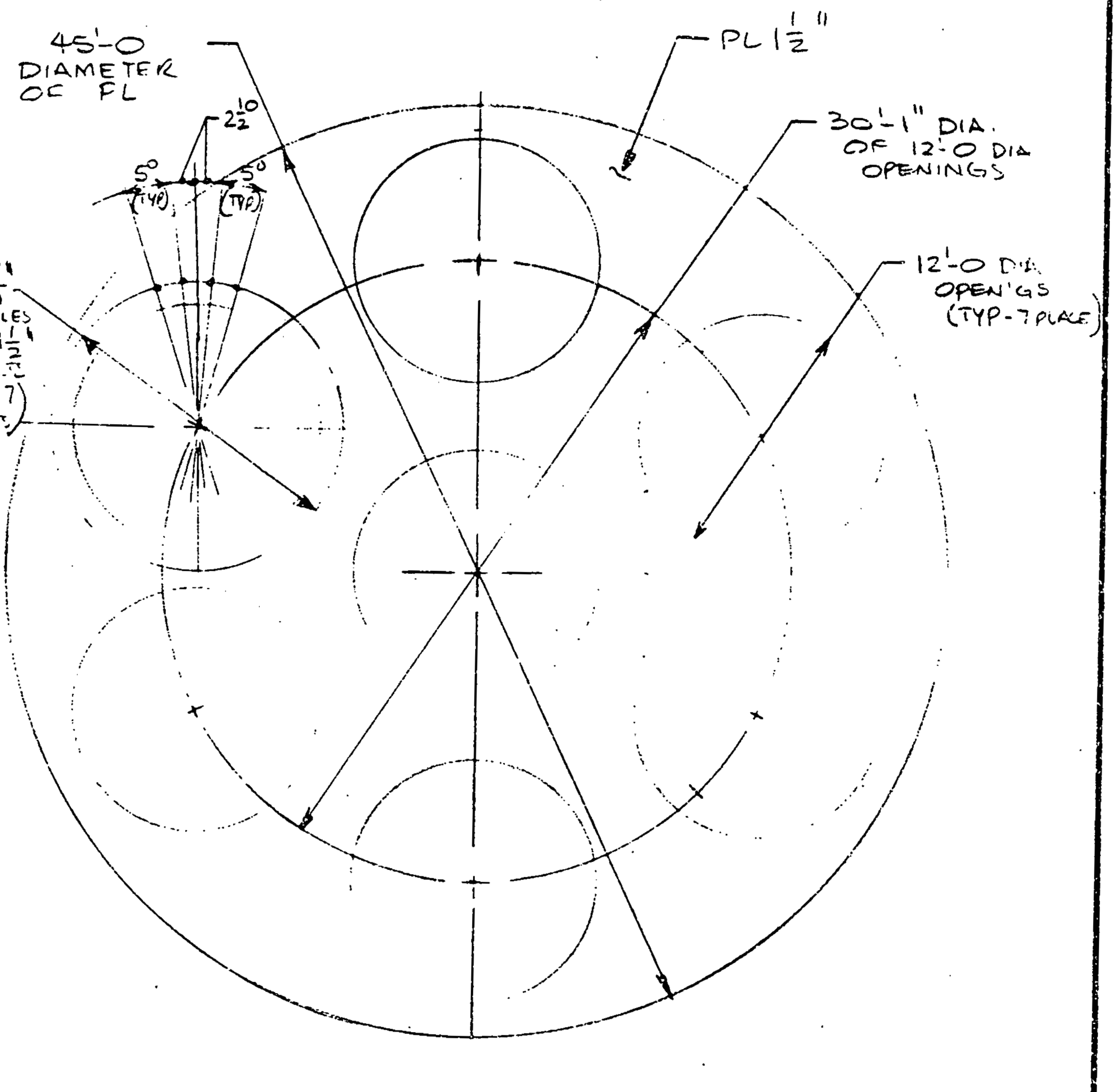

POLYETHYLENE PIPE MOUNTING FLANGE ④
⅛"=1'-0

PREPARED L.R. MORTACONI
CHECKED
MODEL
REPORT NO.
PAGE

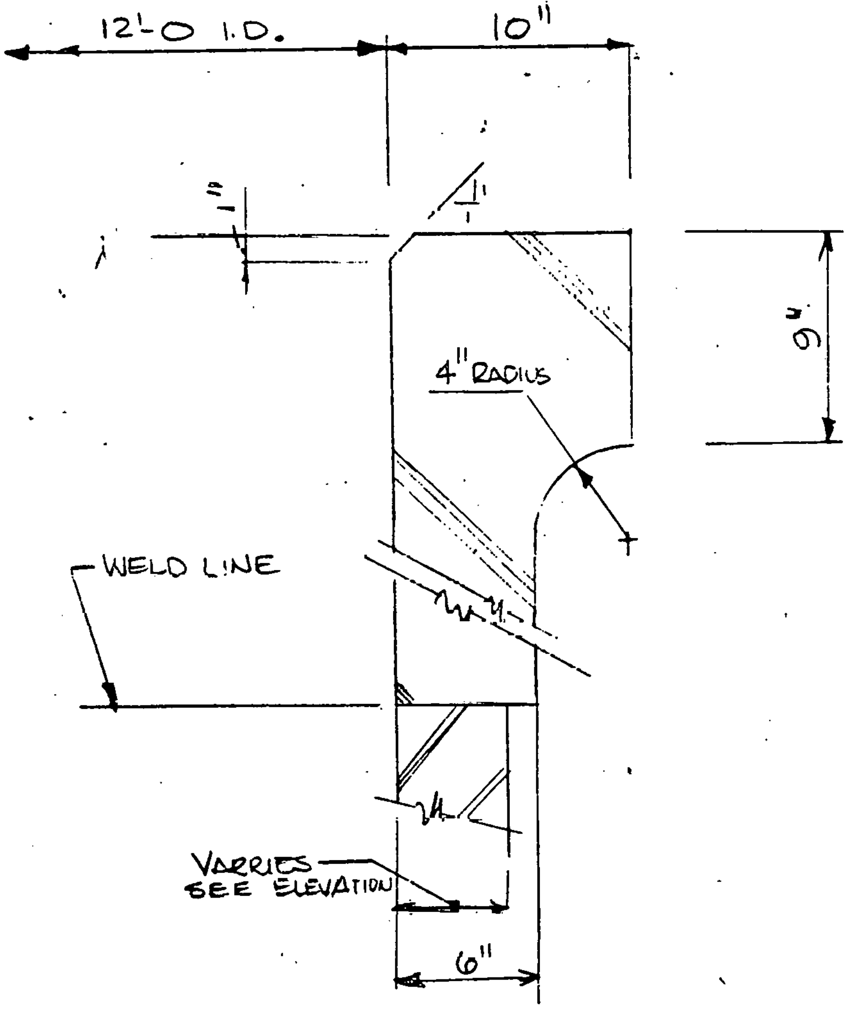

POLYETHYLENE PIPE FLANGE ⑤
3"=1'-0

PREPARED L.R. MORTALONI

CHECKED

MODEL

REPORT NO.

PAGE

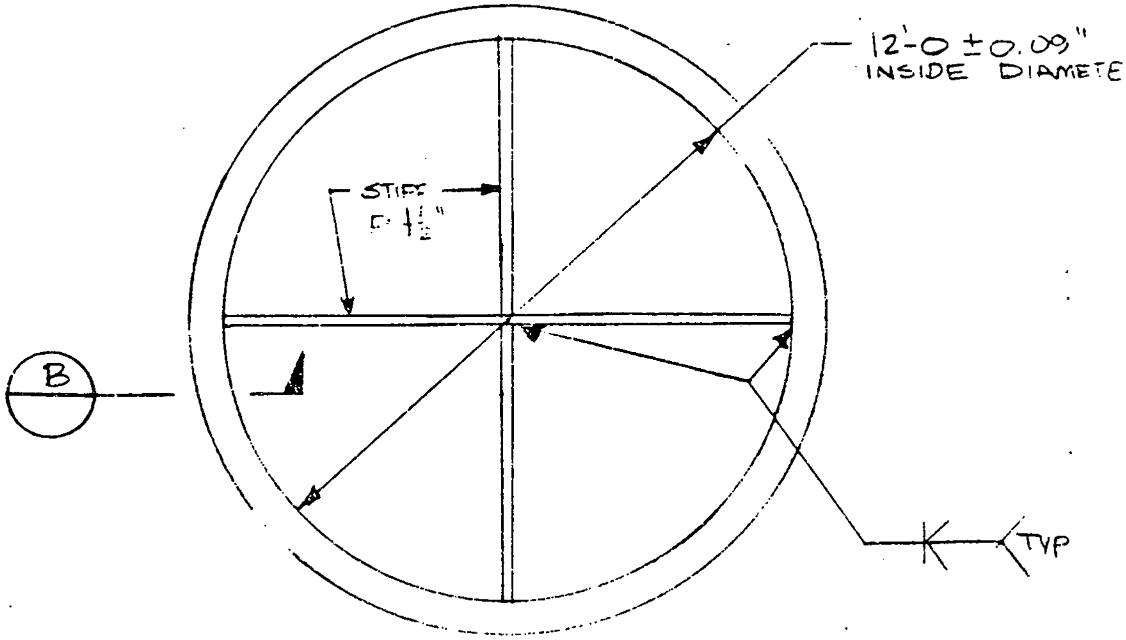

INTERNAL PIPE SUPPORT RING 6

¼" = 1'-0

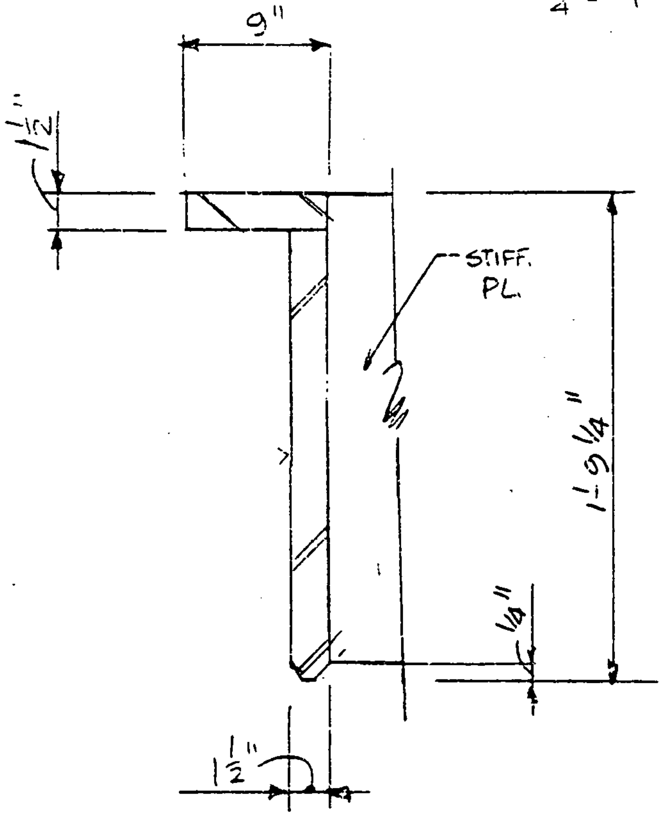

B

1½" = 1'-0

PREPARED L.R. MORTALONI
CHECKED
MODEL
REPORT NO.
PAGE

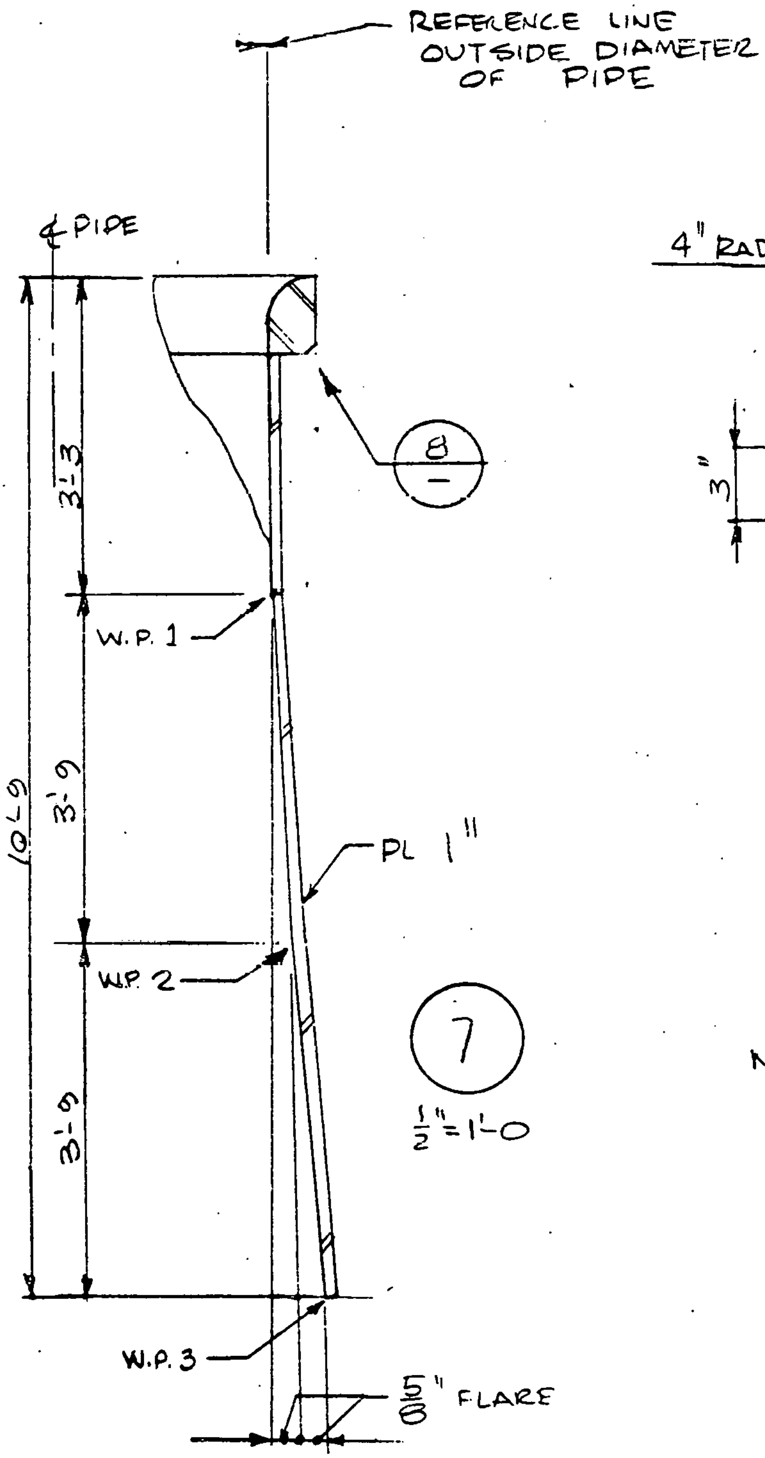

7
1/2"=1'-0

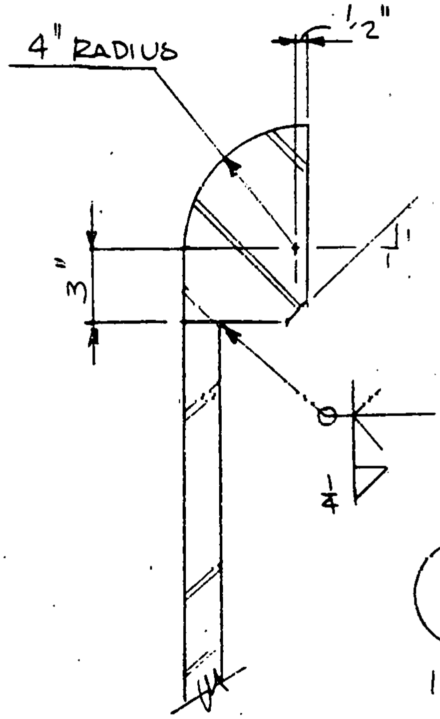

8
1 1/2"=1'-0

NOTE:

PREPARED L.R. Mortaconi
CHECKED
MODEL
REPORT NO.
PAGE

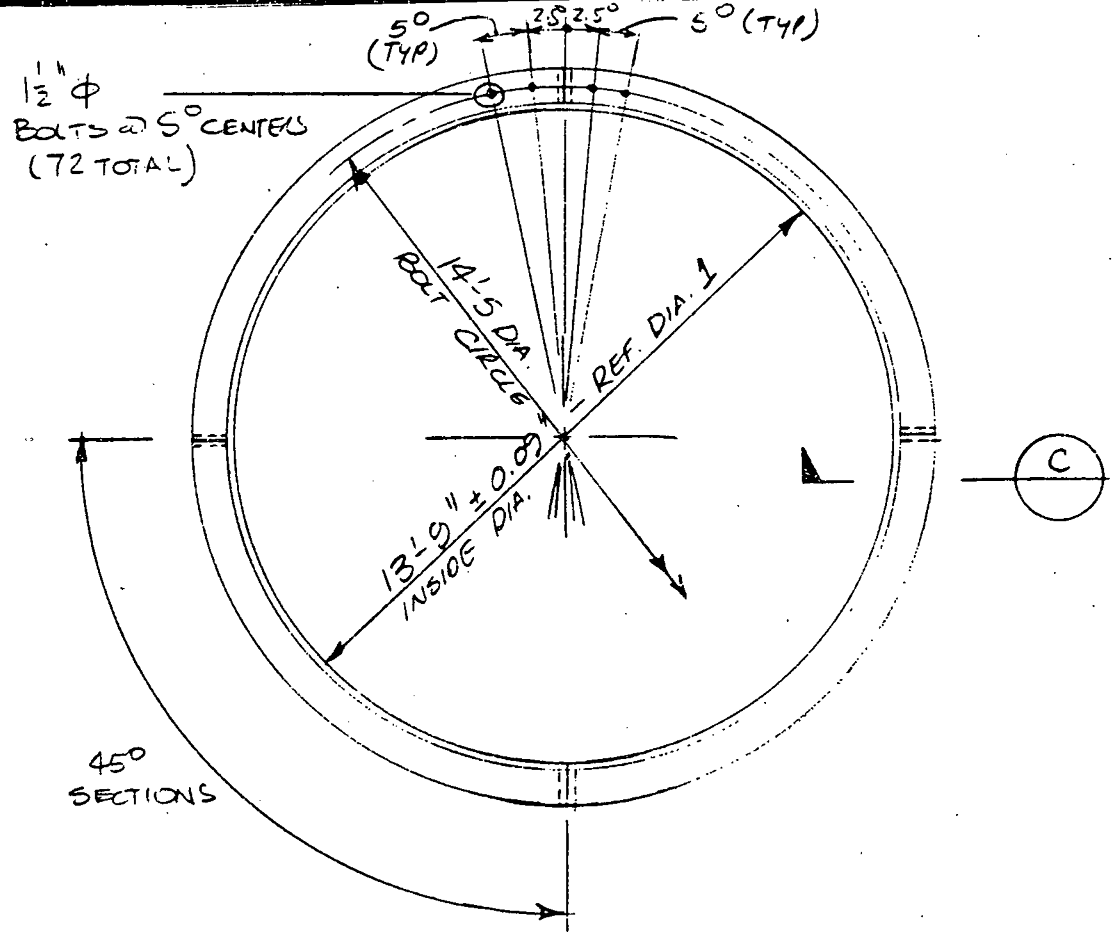

LOCKING FLANGE RING ⑨

1/4" = 1'-0

PREPARED L.R. MORTALONI
CHECKED
MODEL
REPORT NO.
PAGE

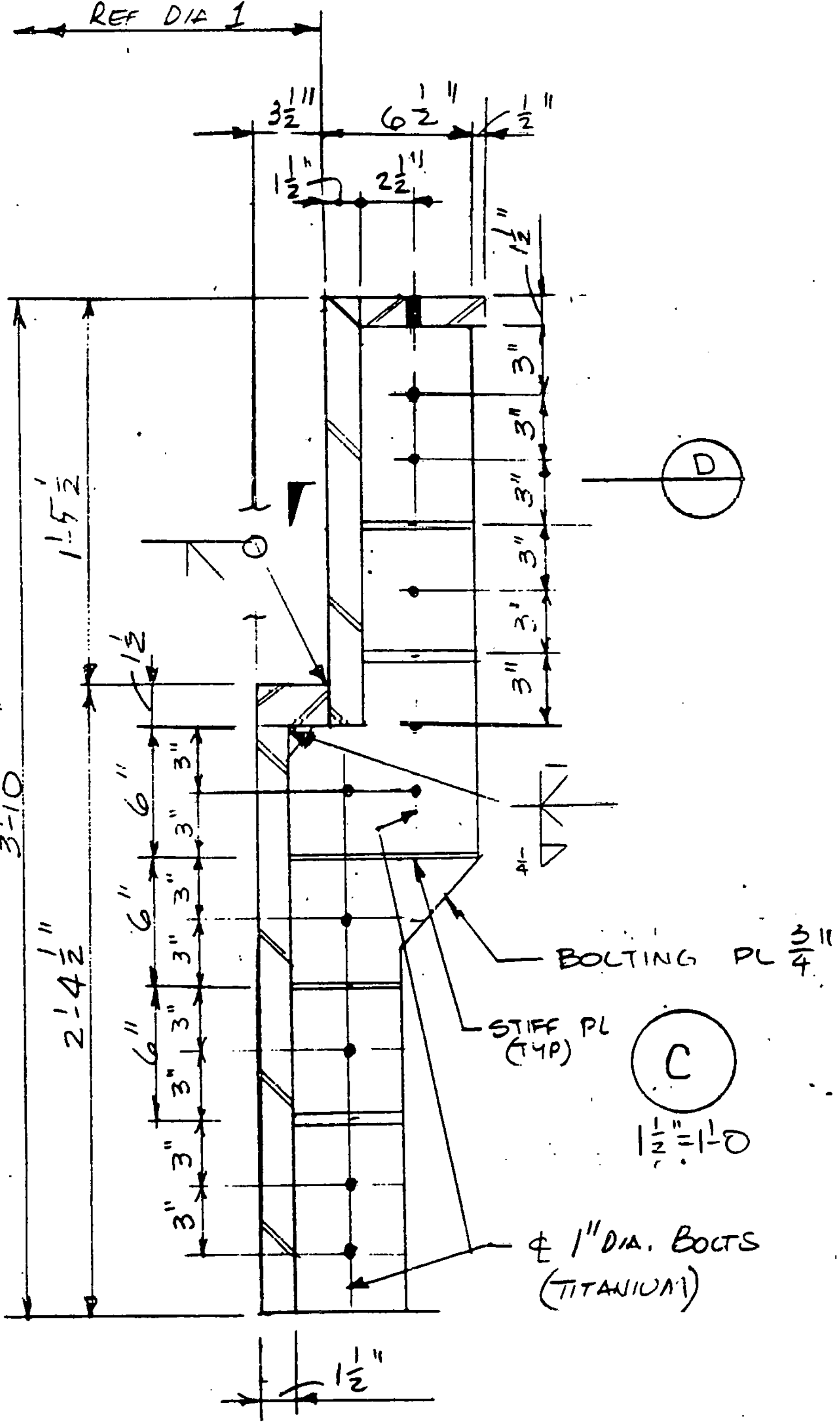

PREPARED L.R. MORTALONI
CHECKED
MODEL
REPORT NO.
PAGE

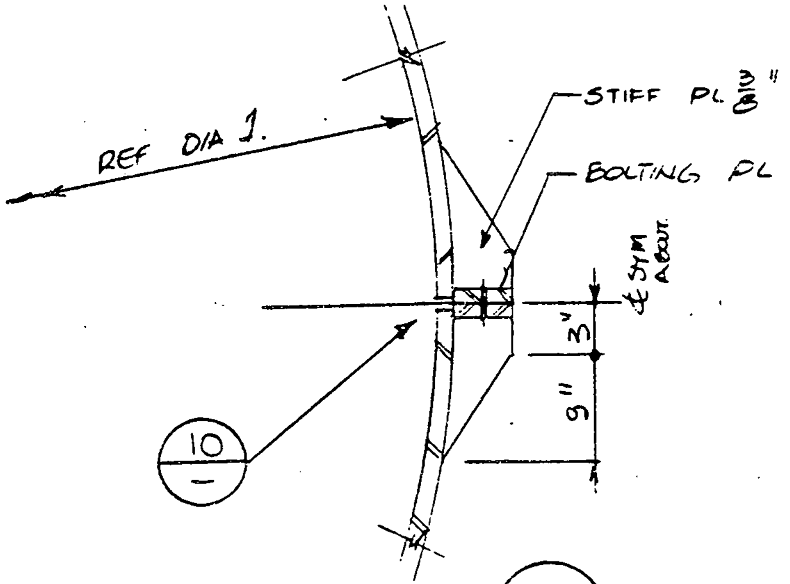

D

3/4"=1'-0

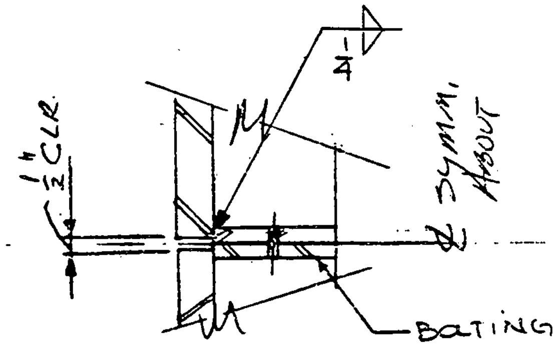

10

1 1/2"=1'-0

PREPARED L.R.Mortaloni
CHECKED
MODEL
REPORT NO.
PAGE

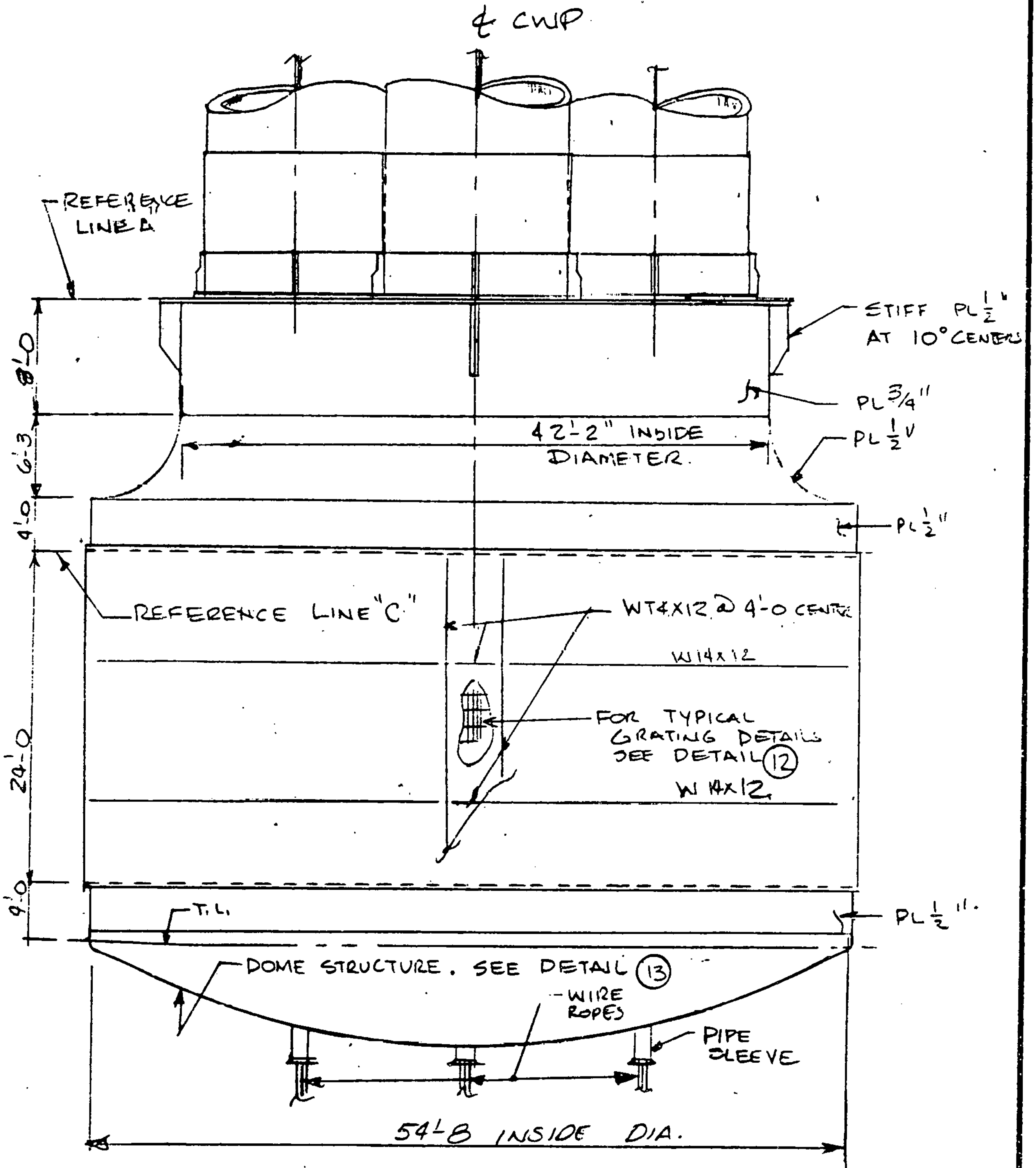

LOWER TRANSITION AND SCREEN STRUCTURE (11)

$\frac{3}{32}$"=1'-0

PREPARED L.R. MORTALONI
CHECKED
MODEL
REPORT NO.
PAGE

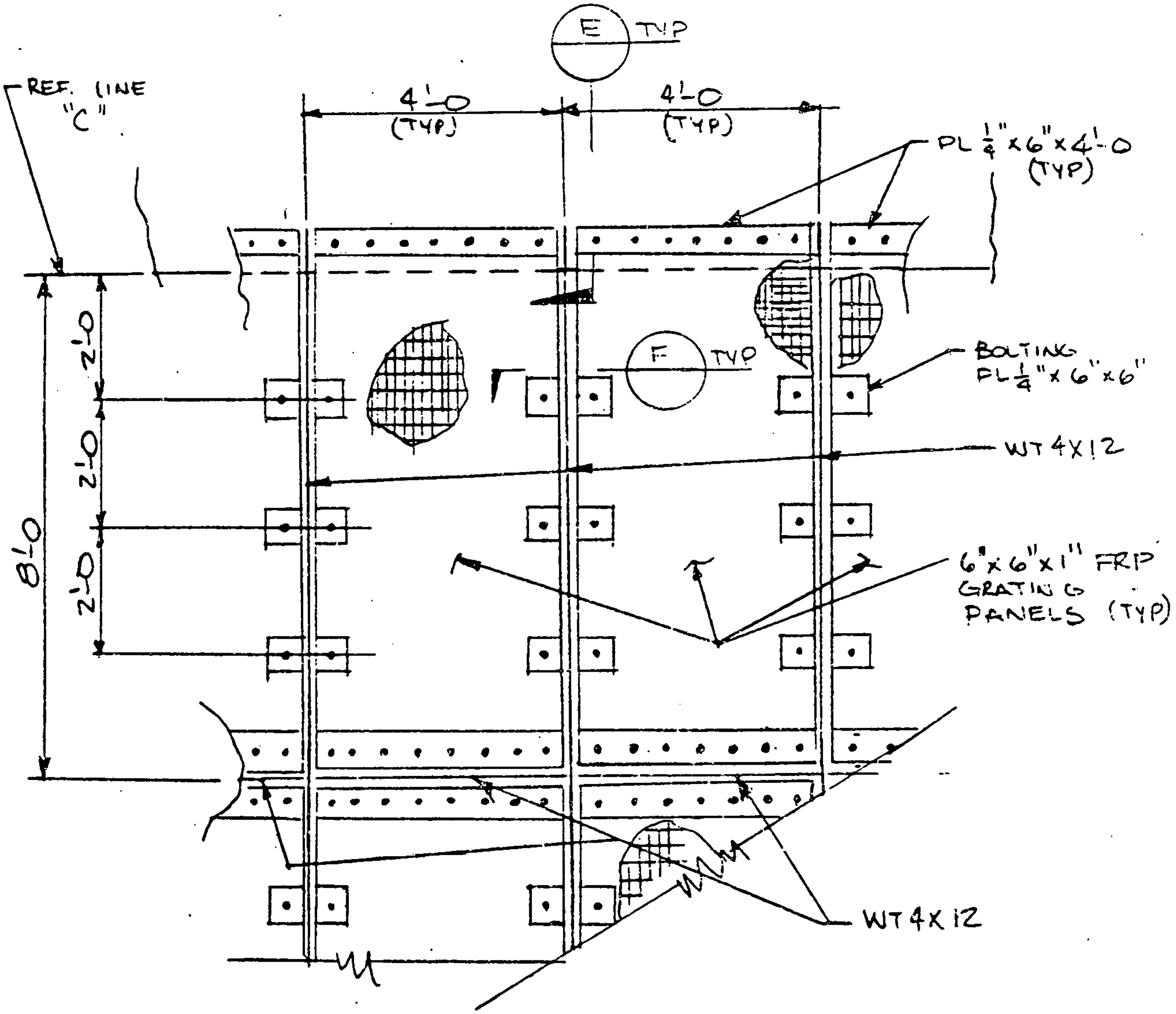

12

3/8" = 1'-0

PREPARED L.R. MORTALON

REPORT NO.

PAGE

CHECKED

MODEL

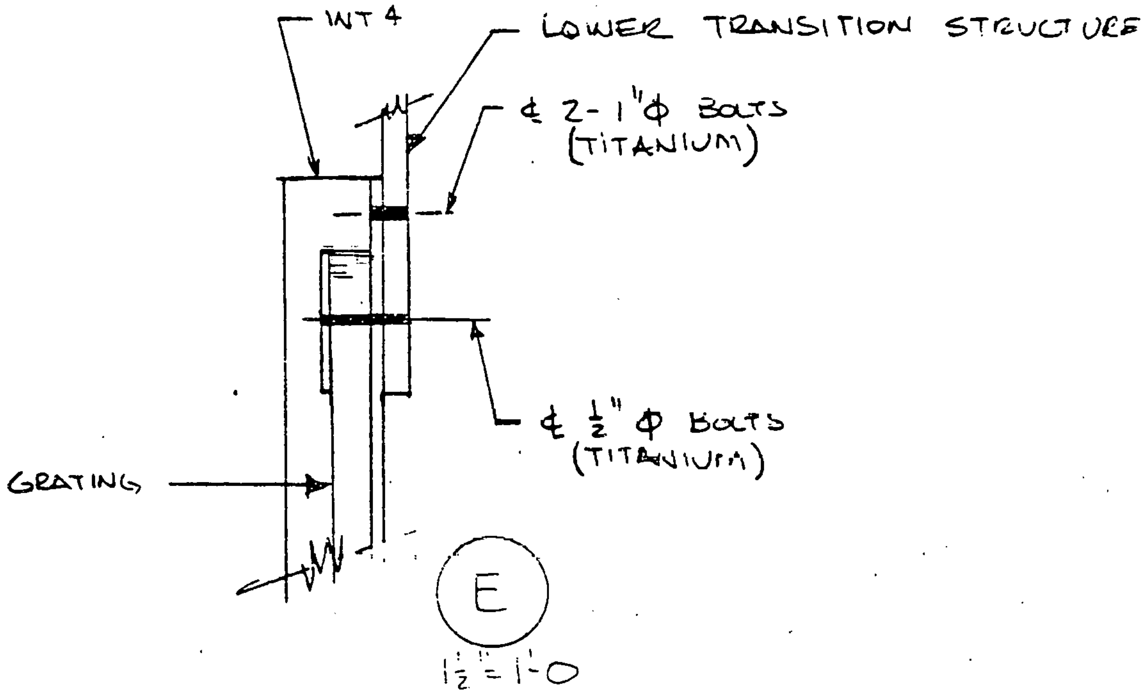

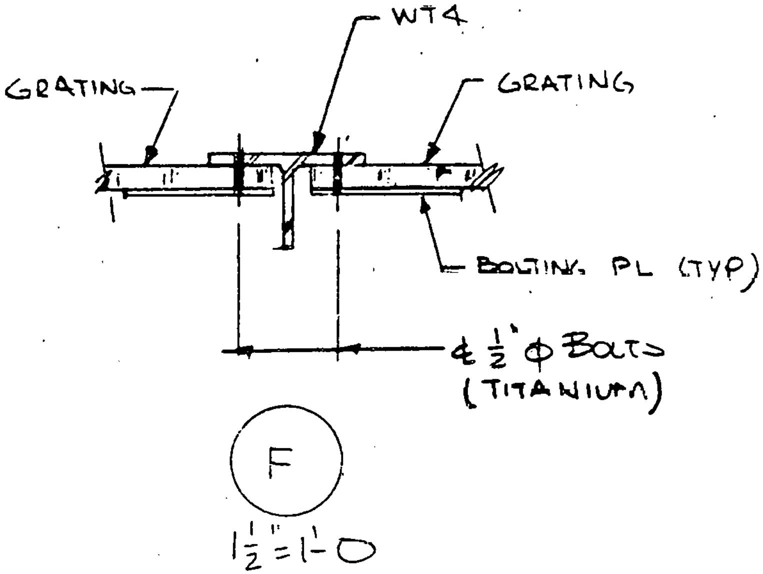

PREPARED L.R. MORTALONI
CHECKED
MODEL
REPORT NO.
PAGE

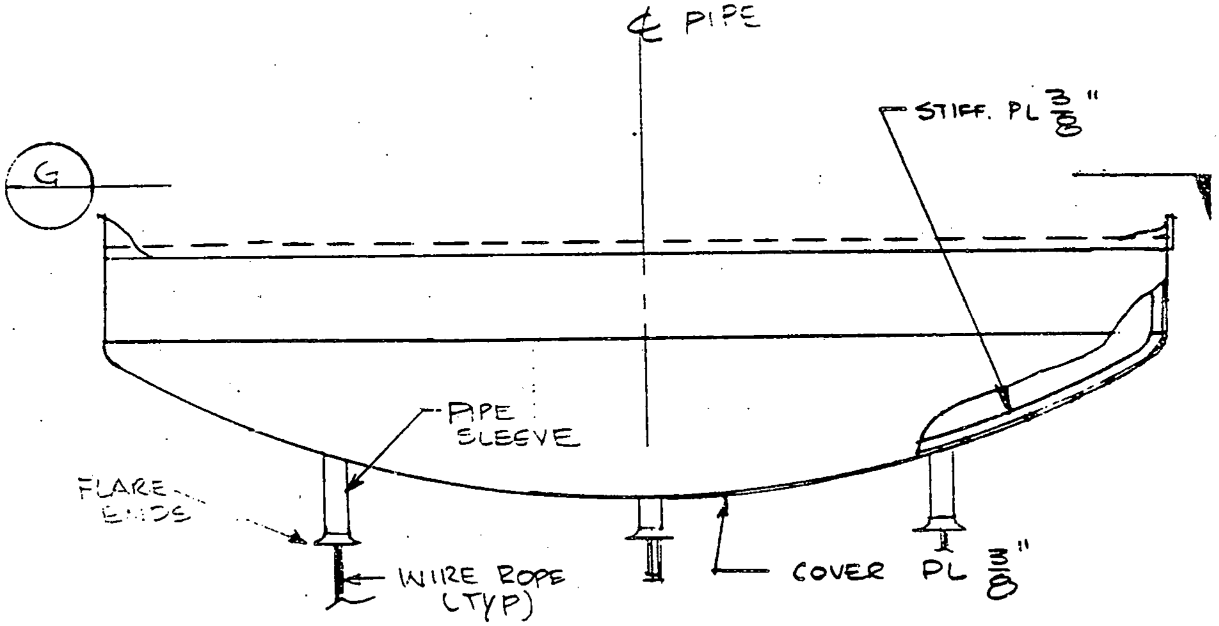

DOME STRUCTURE ③
$\frac{1}{4}$" = 1'-0

PREPARED L.R. MORTALONI
CHECKED
MODEL
REPORT NO.
PAGE

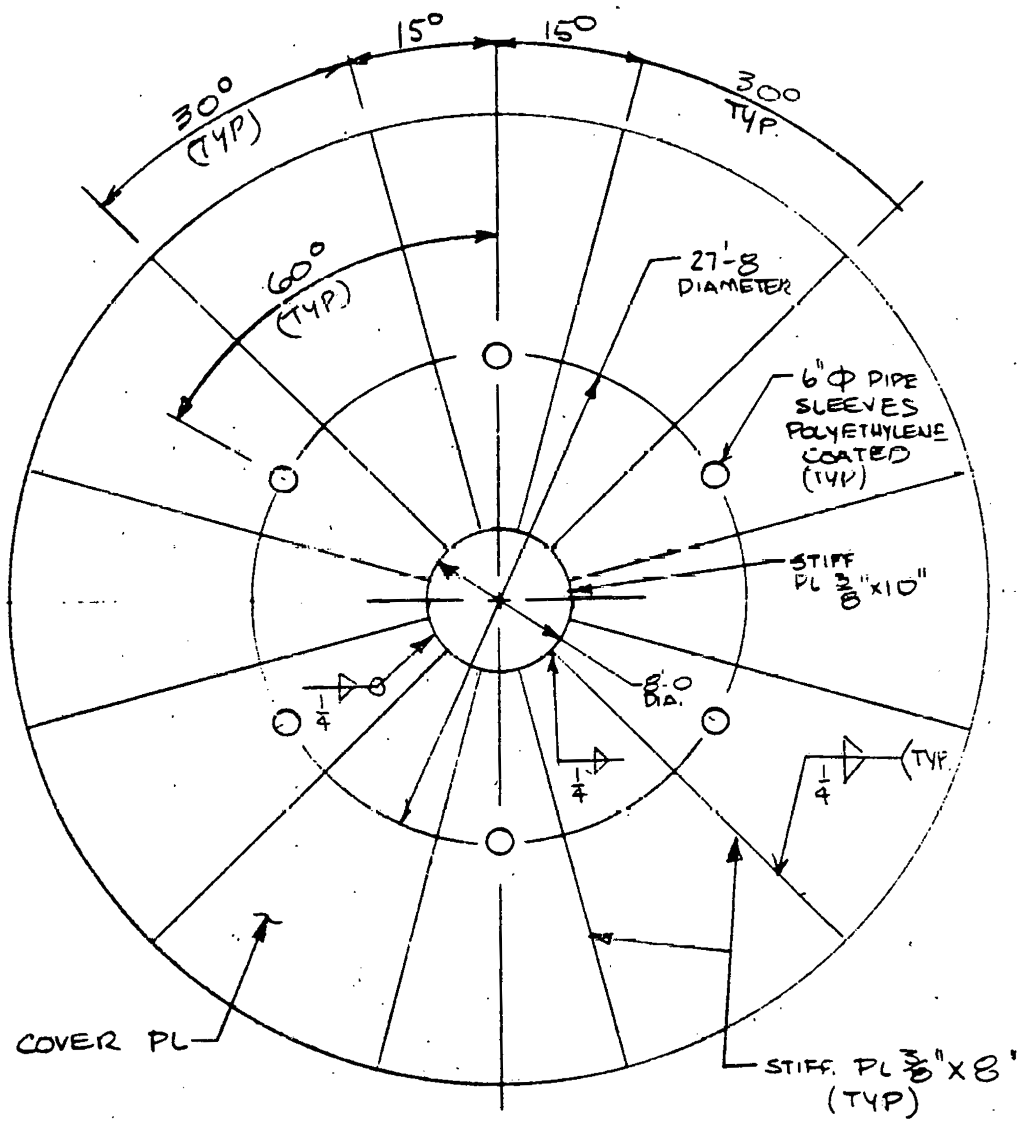

G

$\frac{3}{32}$"=1'-0

APPENDIX C

ELASTOMER PIPE DRAWINGS

PREPARED L.R. MORTALONI
CHECKED
MODEL
REPORT NO.
PAGE

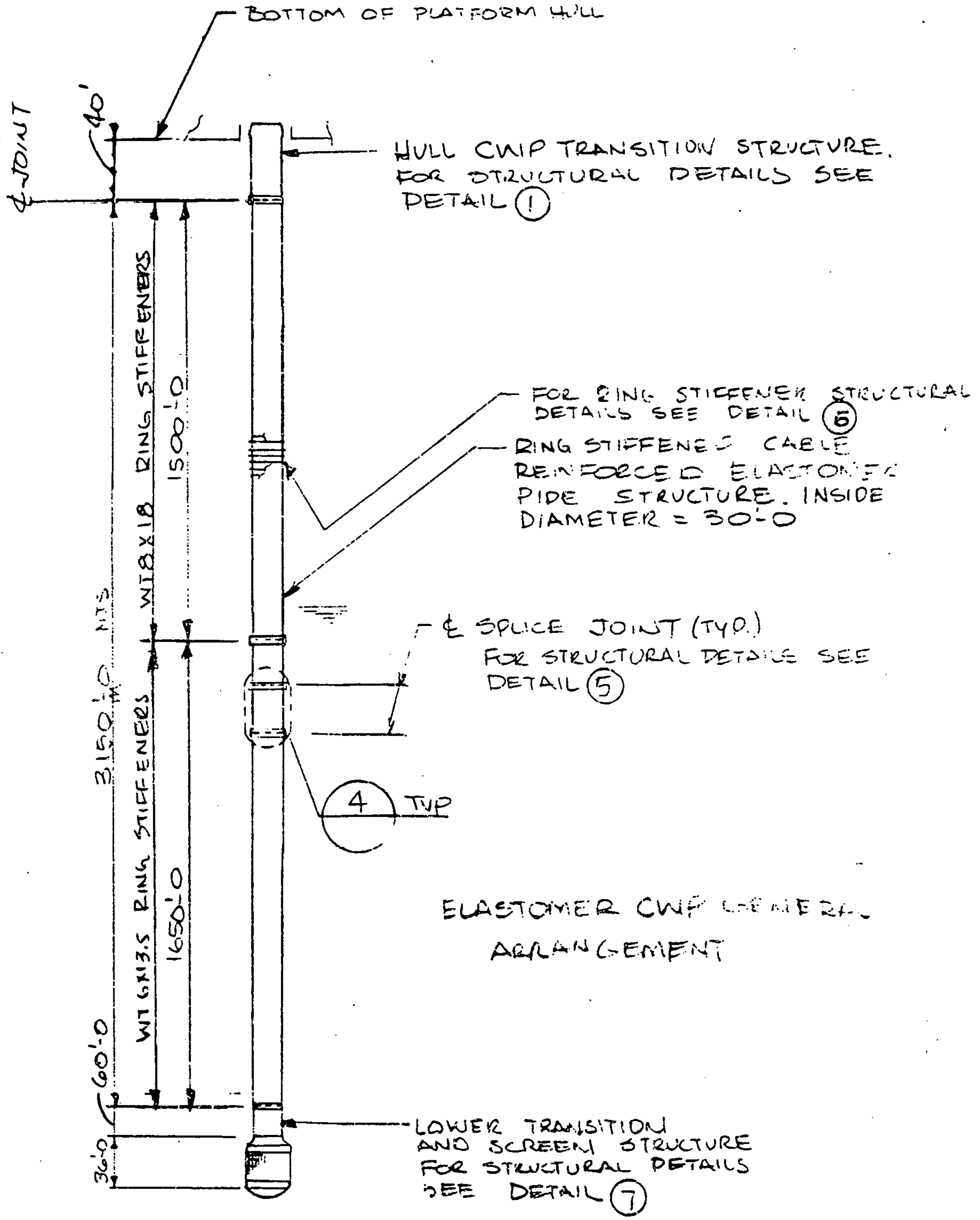

HULL CWP TRANSITION STRUCTURE. FOR STRUCTURAL DETAILS SEE DETAIL ①

FOR RING STIFFENER STRUCTURAL DETAILS SEE DETAIL ⑥

RING STIFFENED CABLE REINFORCED ELASTOMER PIPE STRUCTURE. INSIDE DIAMETER = 30'-0

℄ SPLICE JOINT (TYP.) FOR STRUCTURAL DETAILS SEE DETAIL ⑤

LOWER TRANSITION AND SCREEN STRUCTURE FOR STRUCTURAL DETAILS SEE DETAIL ⑦

ELASTOMER CWP GENERAL ARRANGEMENT

TRW
DEFENSE AND SPACE SYSTEMS GROUP
ONE SPACE PARK • REDONDO BEACH, CALIFORNIA

PREPARED L.R. MORTALONI 26 JULY 197[illegible]
REPORT NO.
PAGE
CHECKED
MODEL

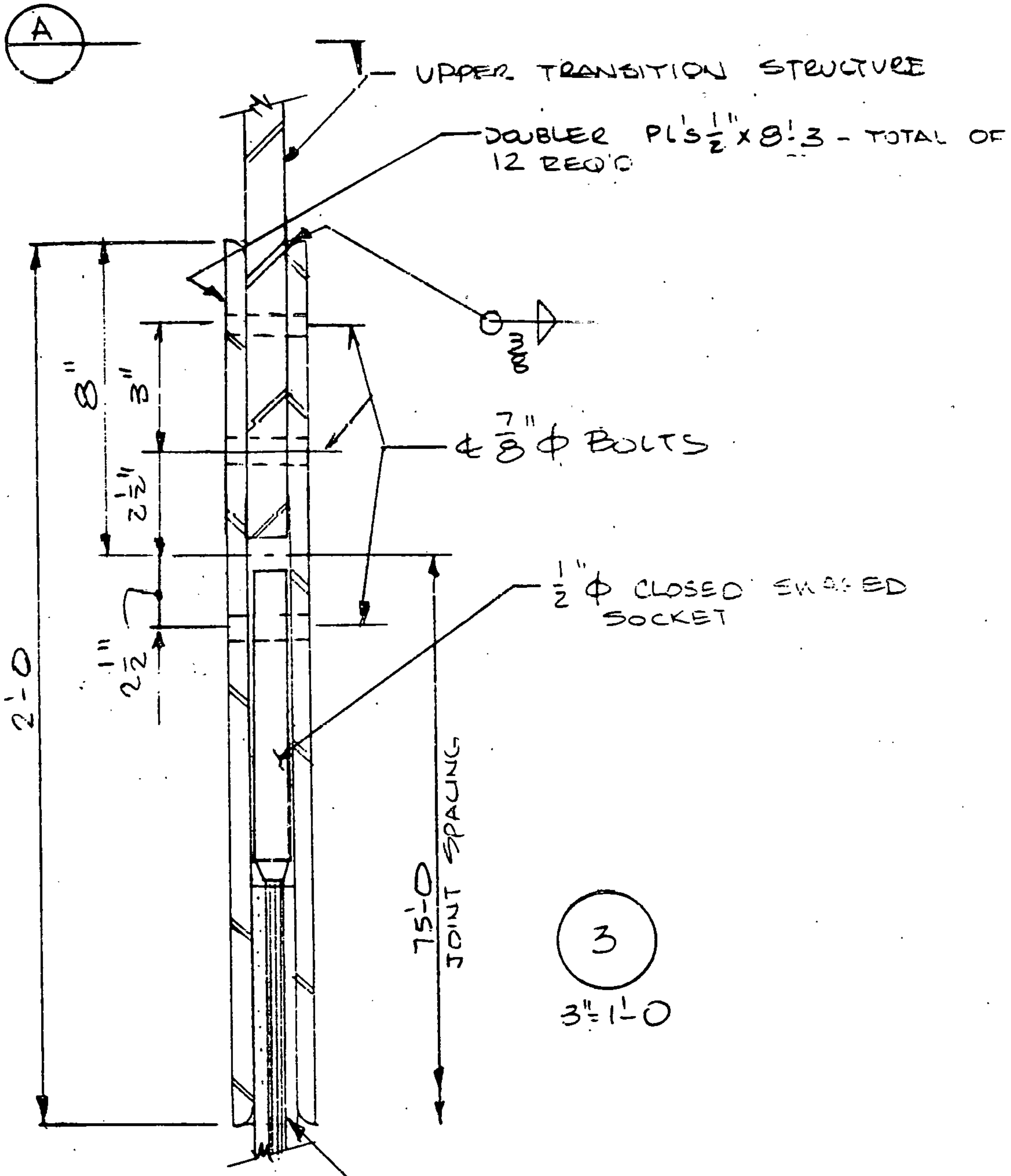

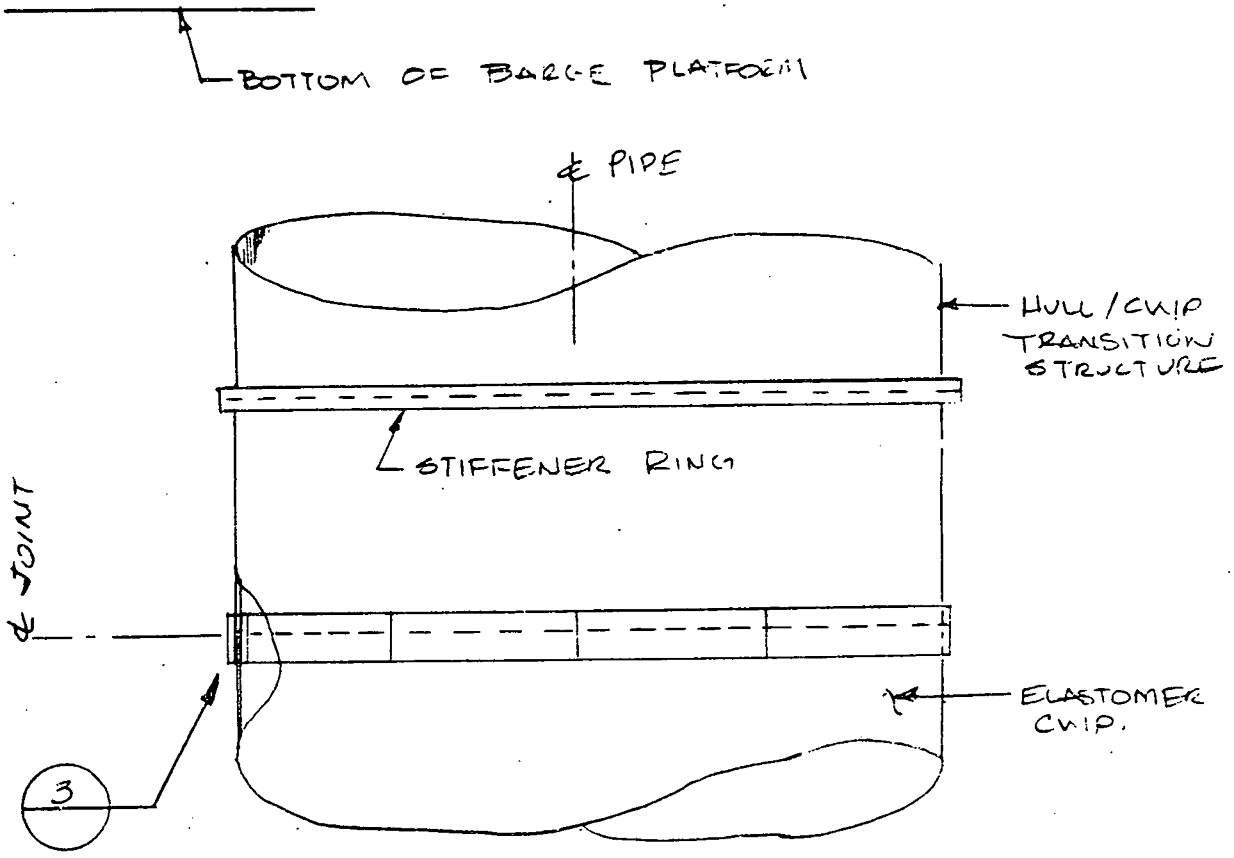
BOTTOM OF BARGE PLATFORM
℄ PIPE
HULL/CWP TRANSITION STRUCTURE
STIFFENER RING
℄ JOINT
ELASTOMER CWP.
3


1
1"/8 = 1'-0

PREPARED L.R. MORTALONI

CHECKED

MODEL

REPORT NO.

PAGE

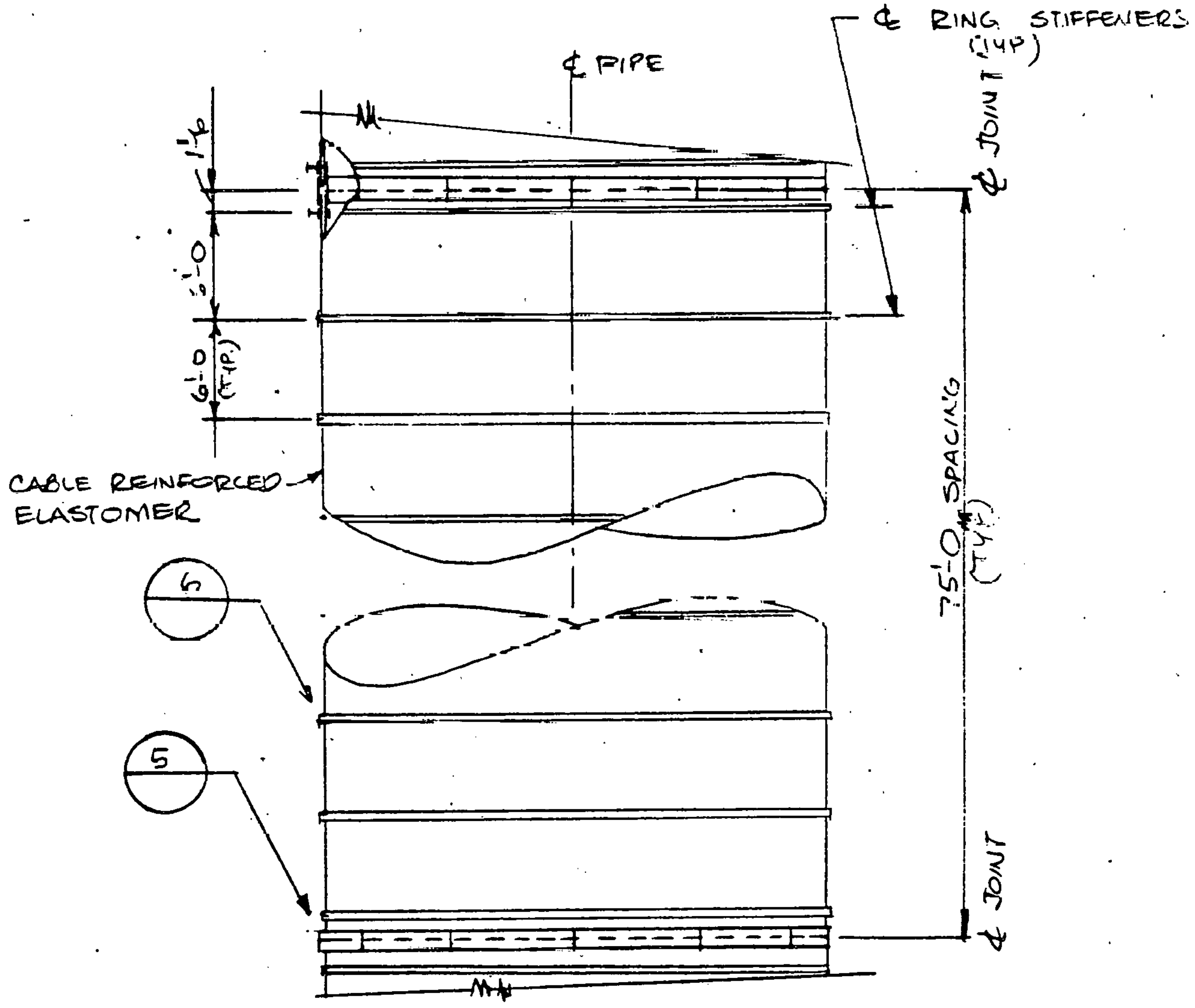

④

3/32" = 1'-0

PREPARED L.R. MORTALONI 26 JULY 1979
CHECKED
MODEL
REPORT NO.
PAGE

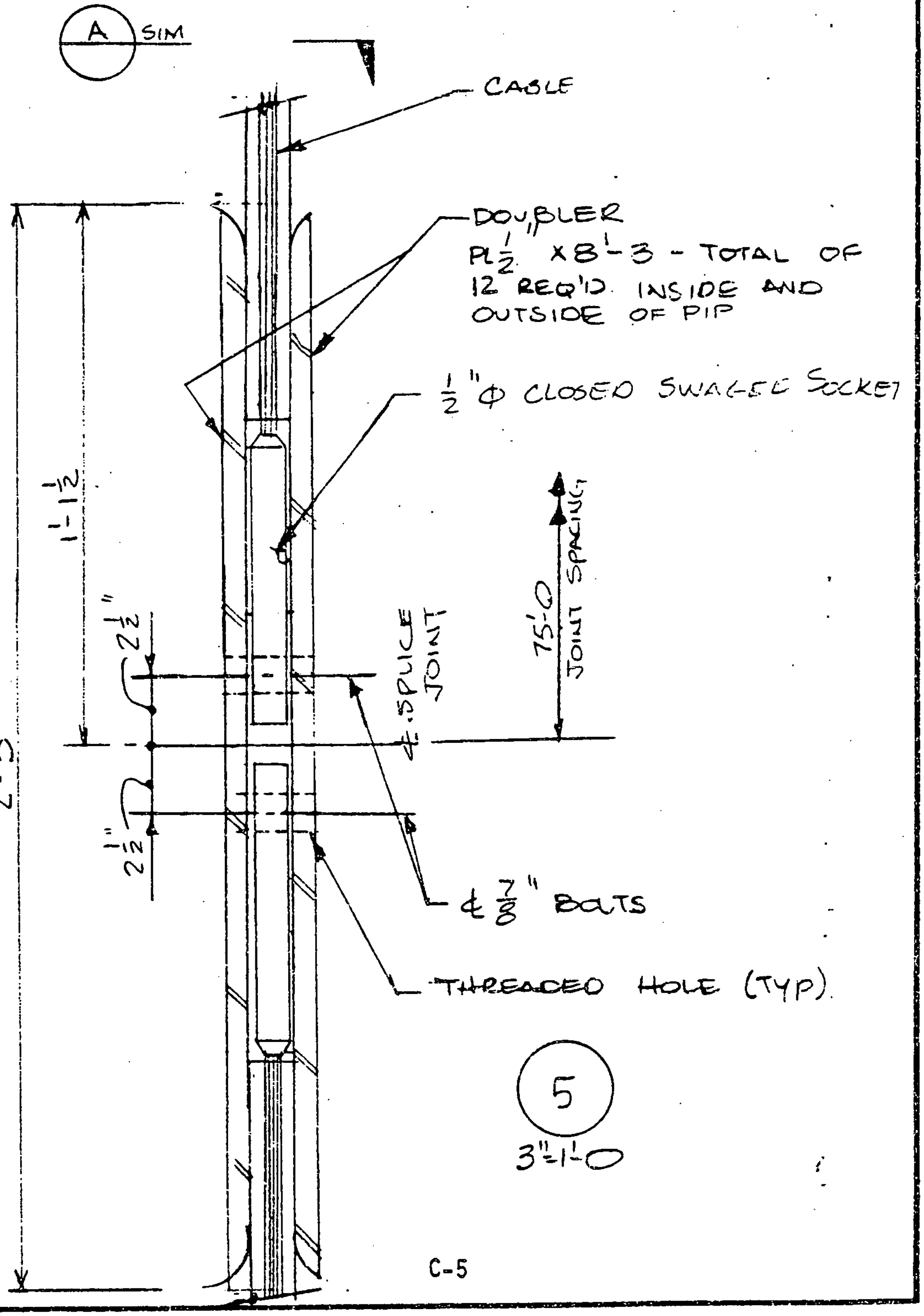

TRW

ONE SPACE PARK · REDONDO BEACH, CALIFORNIA

PREPARED L.P. MORTALONI

CHECKED

MODEL

REPORT NO.

PAGE

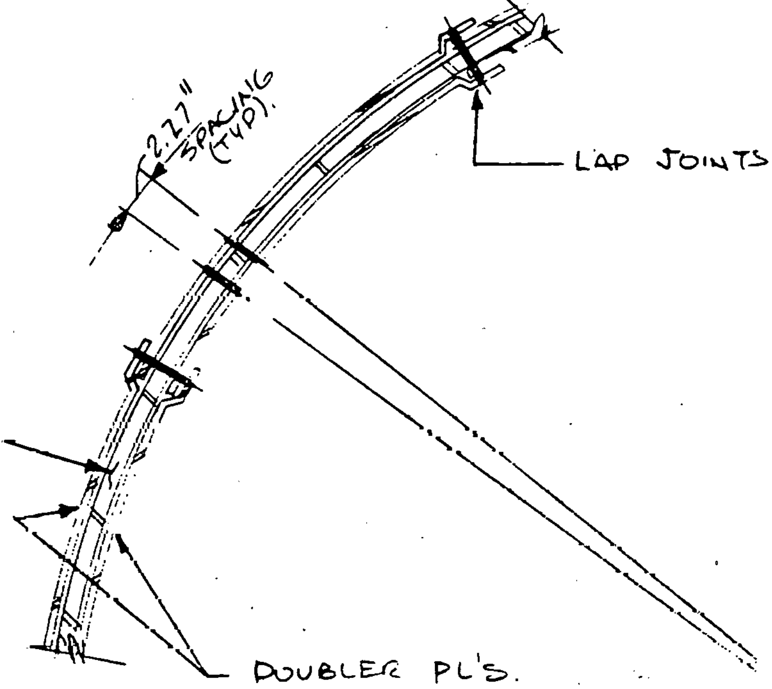

A

N.T.S

SYSTEMS 1441 REV. 4-76

TRW
DEFENSE AND SPACE SYSTEMS GROUP
ONE SPACE PARK • REDONDO BEACH, CALIFORNIA

PREPARED L.R. MORTALONI 3 JULY 1979 REPORT NO. PAGE
CHECKED
MODEL

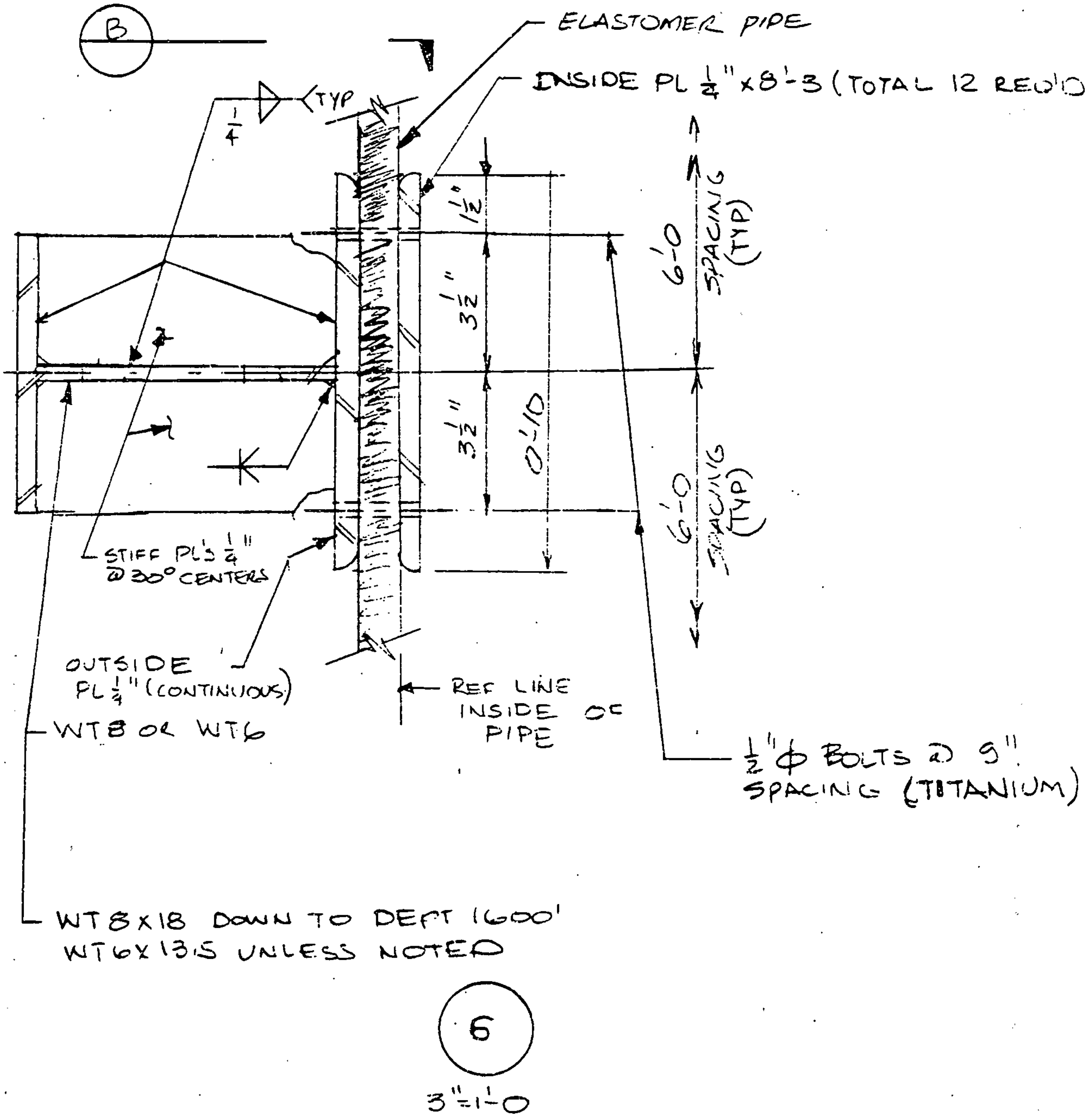

SYSTEMS 1441 REV. 4-76

PREPARED L.R. MORTALONII 31 JULY 1977 REPORT NO. PAGE

CHECKED

MODEL

ELASTOMER CLIP

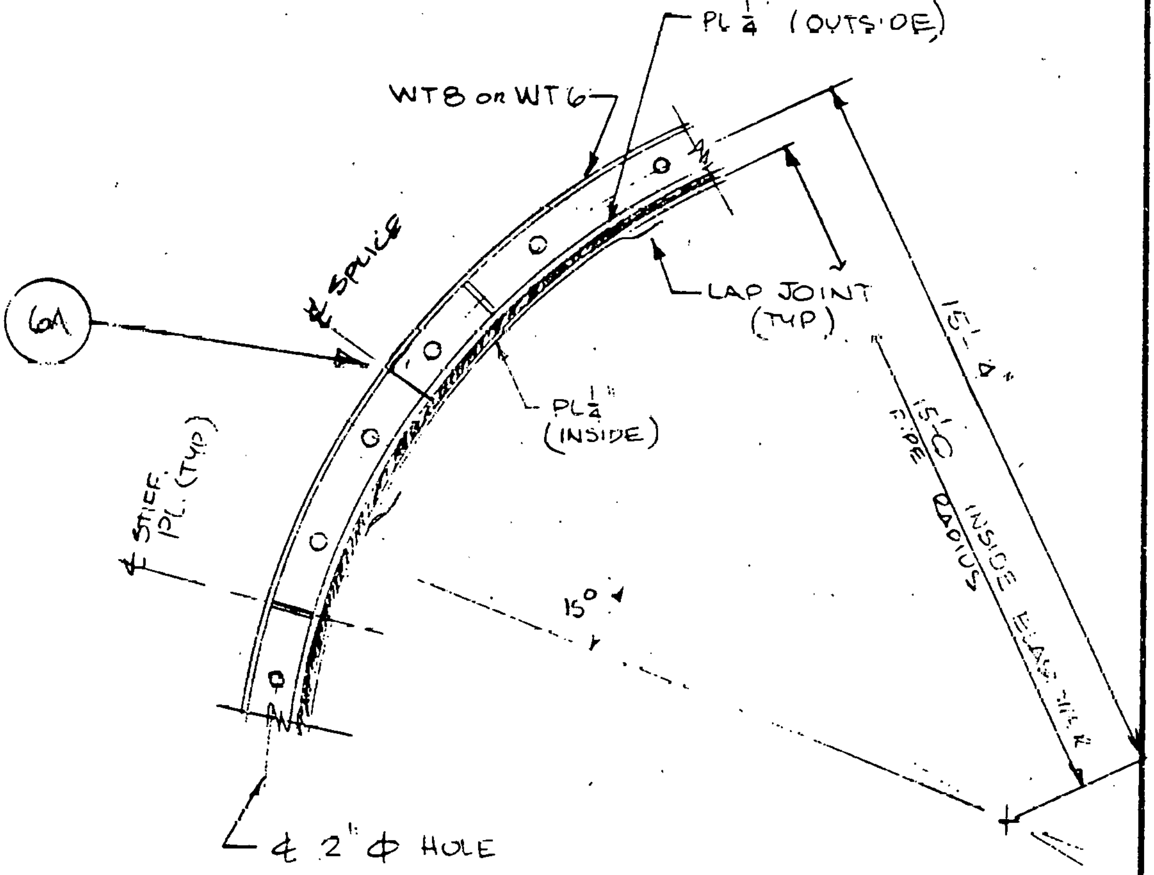

Ⓑ
NTS

PREPARED ______
CHECKED ______
MODEL ______
REPORT NO.
PAGE

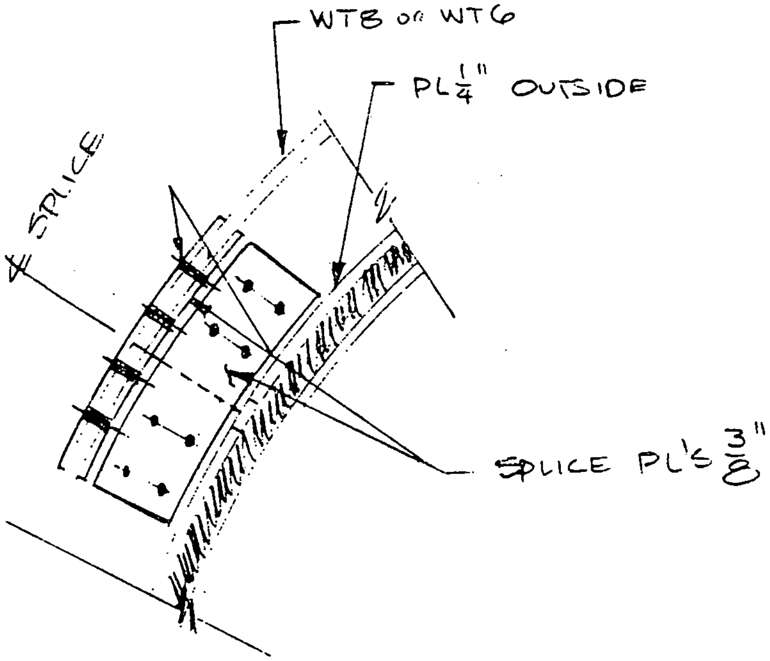

6A

N.T.S

PREPARED L.R. MORTALONI 24 JULY 197

CHECKED

MODEL

REPORT NO.

PAGE

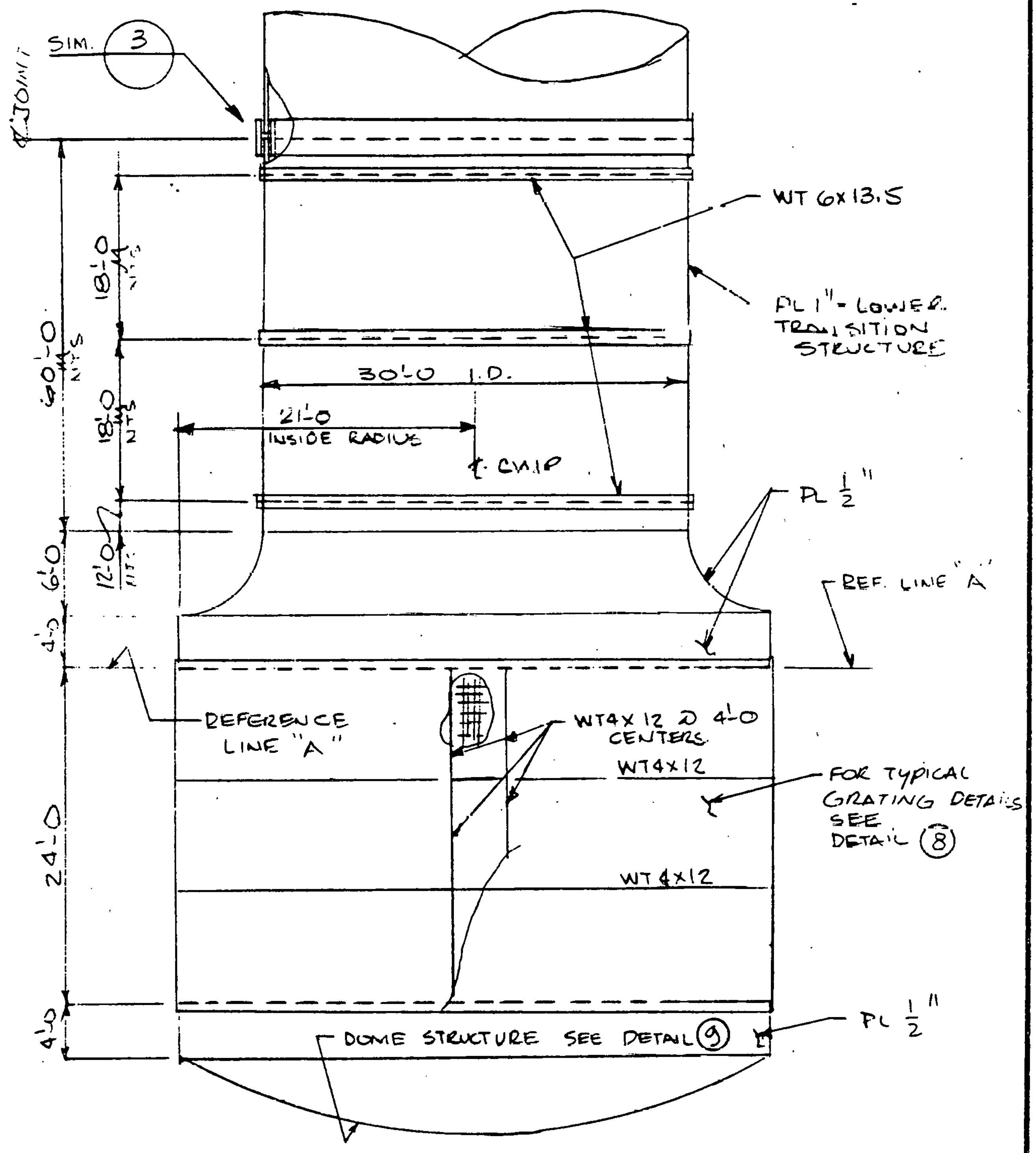

LOWER TRANSITION AND SCREEN STRUCTURE ⑦

3/32" = 1'-0

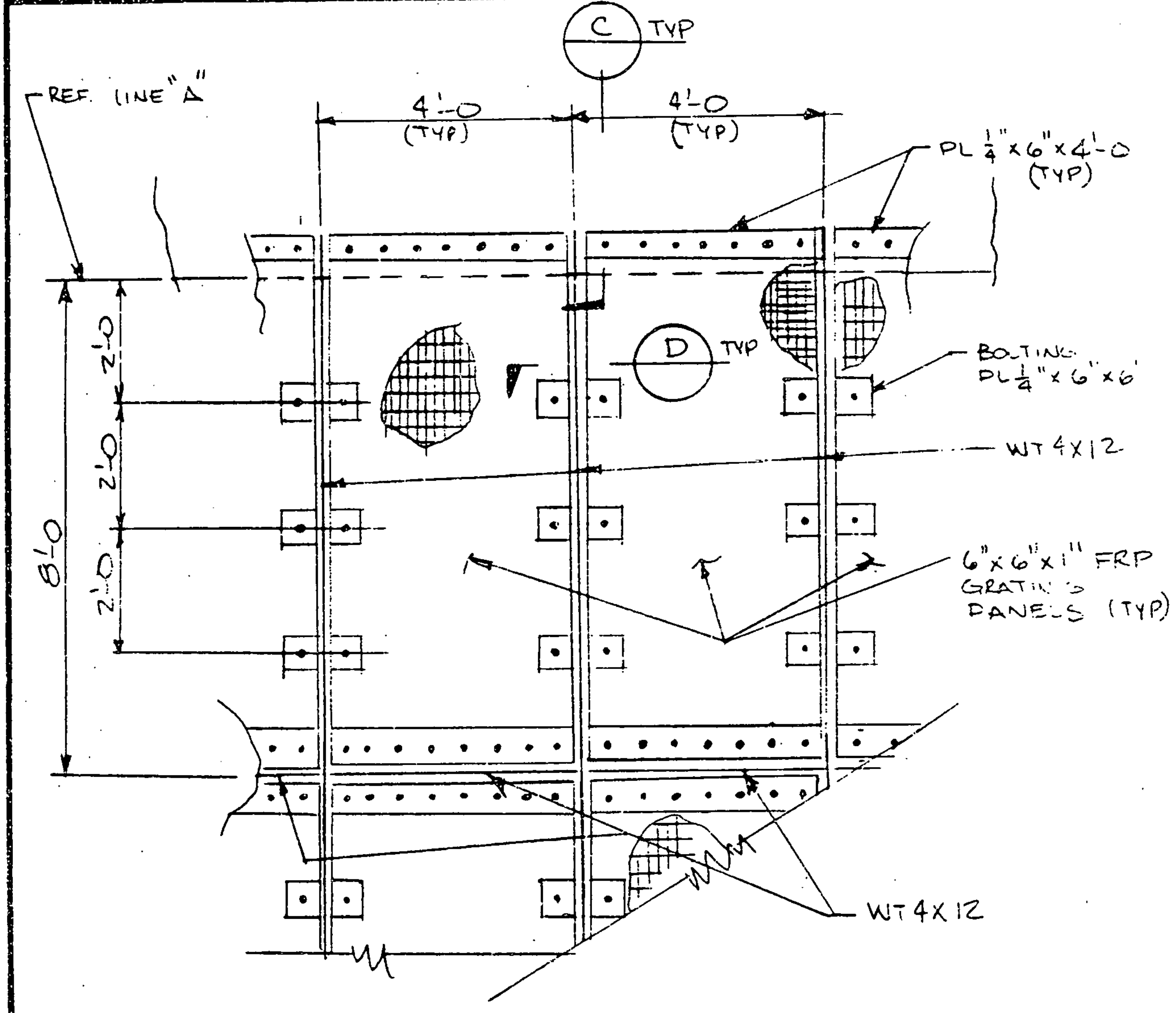
C
TYP
REF. LINE "A"
4'-0 (TYP)
4'-0 (TYP)
PL 1/4"x6"x4'-0 (TYP)
D
TYP
BOLTING PL 1/4"x6"x6'
WT 4X12
2'-0
2'-0
2'-0
8'-0
6"x6"x1" FRP GRATING PANELS (TYP)
WT 4X12

8

3/8"=1'-0

PREPARED

CHECKED

MODEL

REPORT NO.

PAGE

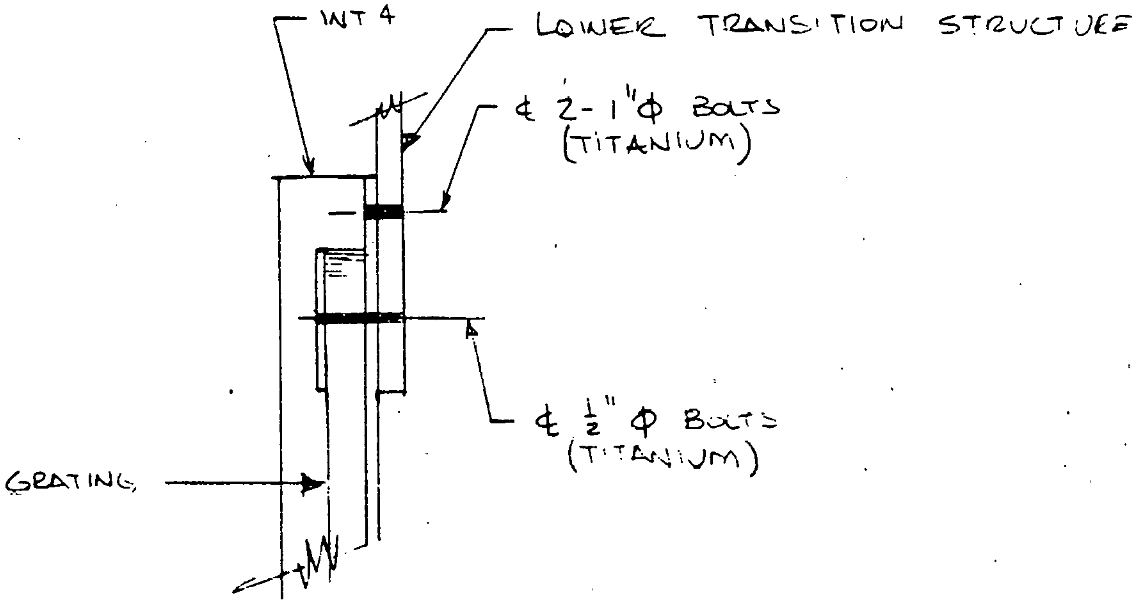

C

1½"=1'-0

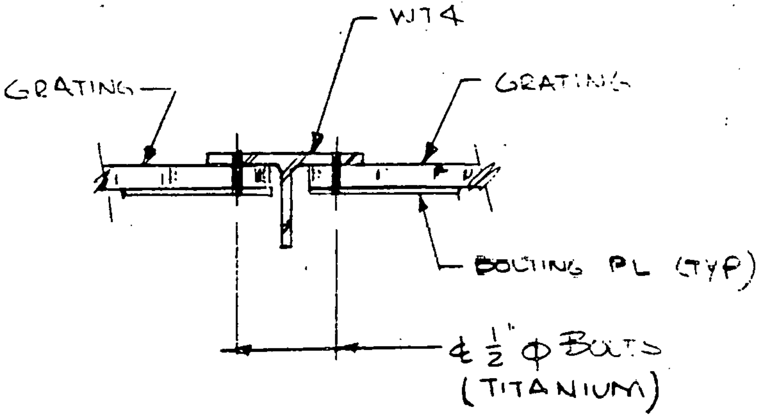

D

1½"=1'-0

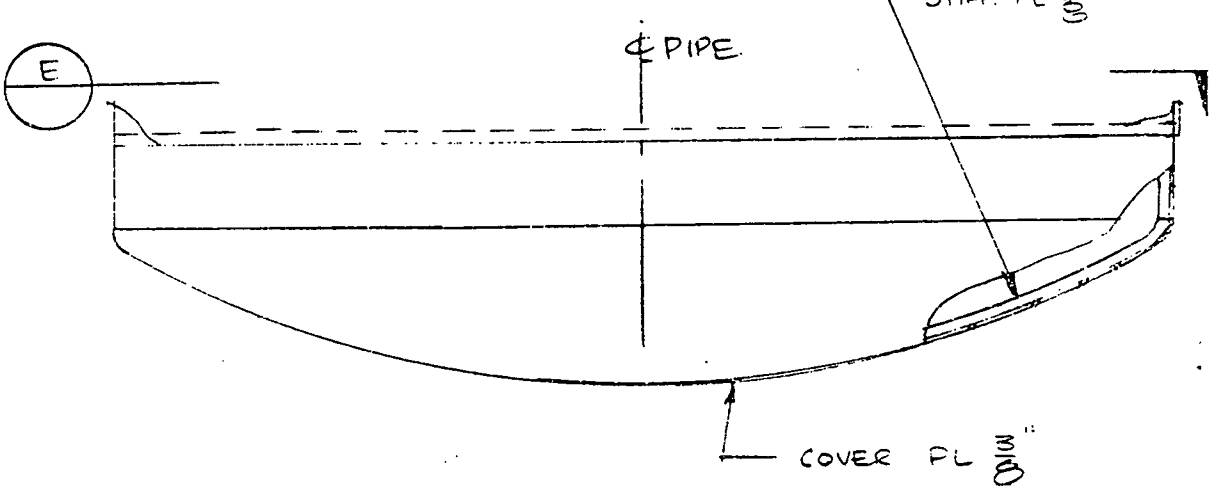

DOME STRUCTURE ⑨
$\frac{1}{4}$" = 1'-0

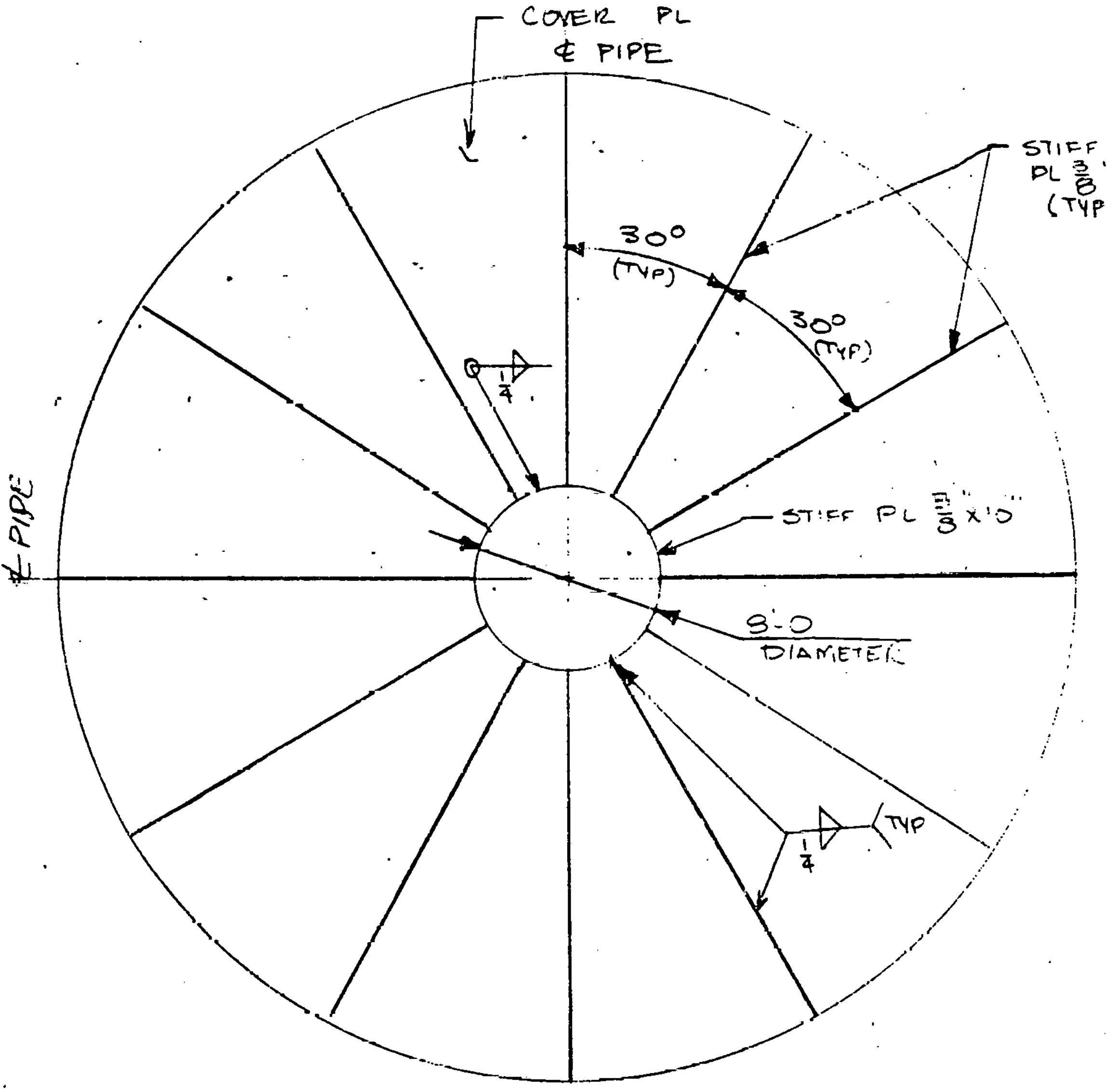
COVER PL
℄ PIPE
STIFF PL 3/8"×3" (TYP)
30° (TYP)
30° (TYP)
1/4
STIFF PL 3/8"×1'0"
8'-0 DIAMETER
℄ PIPE
1/4
TYP

E

1/8" = 1'-0

APPENDIX D

GMDI

PRELIMINARY DRAWINGS FOR OTEC 10/40
HULL/CWP TRANSITIONS

30 AUGUST 1979

PREPARED FOR TRW

GLOBAL MARINE DEVELOPMENT INC.
2302 Martin Street
Irvine, California 92715

no [illegible]

is blank

THIS PAGE
WAS INTENTIONALLY
LEFT BLANK

D-0

LIST OF MATERIALS

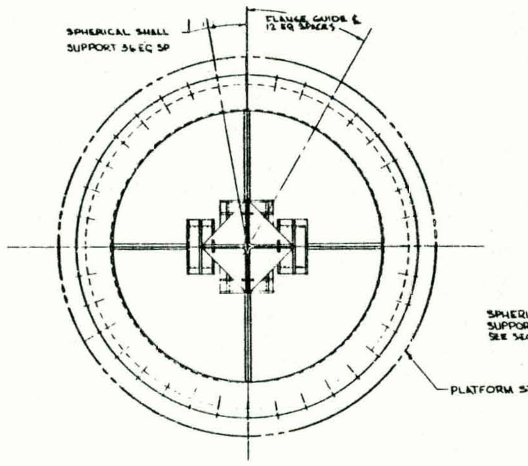

PLAN VIEW 5-D
UPPER SPIDER ASSEMBLY NOT SHOWN FOR CLARITY

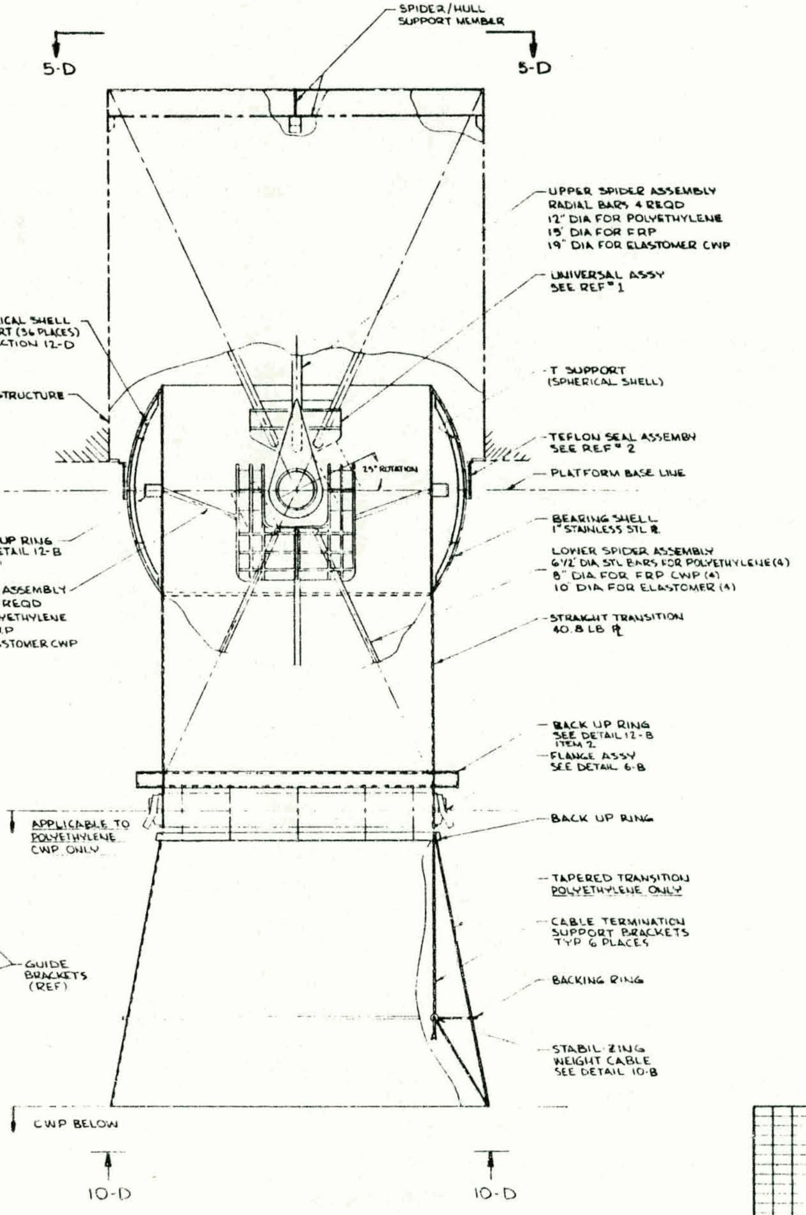

GENERAL NOTES: UNLESS OTHERWISE NOTED

1. ALL STEEL A-36 UNLESS OTHERWISE NOTED.
2. ALL WELDING SHELL BE IN ACCORDANCE WITH APPLICABLE ABS, USCG AND AWS STANDARDS.

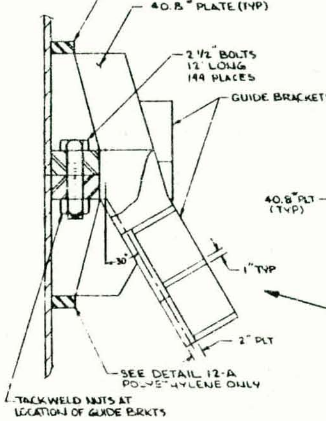

DETAIL 6-B
SCALE: 1/8 = 1"
CONNECTING FLANGE GUIDE STRUCTURE FOR POLYETHYLENE CWP ONLY

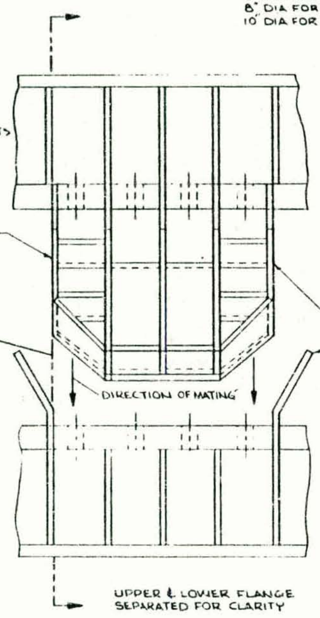

REFERENCE DWGS:

1. E-4087-007 OTEC 10/40 HULL/CWP, UNIVERSAL
2. E-4087-008 OTEC 10/40 HULL/CWP, TEFLON SEAL

RESERVATIONS:

1. THIS DRAWING IS FOR ESTIMATING ONLY NOT CONSTRUCTION.

GLOBAL MARINE DEVELOPMENT Inc.
Newport Beach, Calif

OTEC 10/40 HULL/CWP
TRANSITION

SCALE 3/16 = 1'0
JOB AUTH 04087 C11300
DWG NO E •4087•1006
SH A

TOTAL NET WGT MAT'L
TOTAL NET WGT EQUIP
TOTAL NET WEIGHT

LIST OF MATERIALS

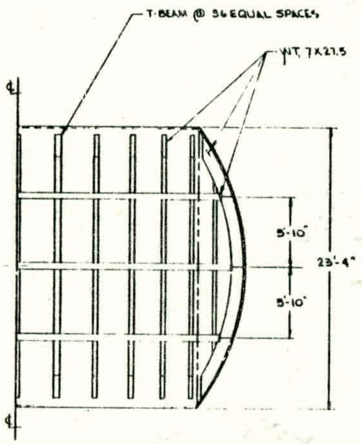

SECTION 12-D
SCALE 1/4"=1'-0"

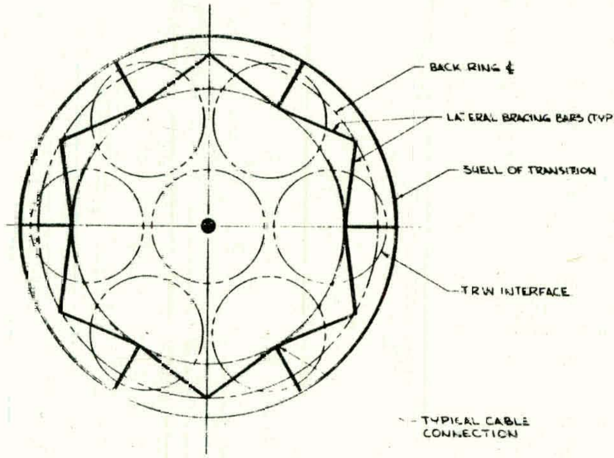

VIEW-10-D

ITEM	A	B	C	D
1	23"	13"	11"	24"
2	34"	21"	19"	39"

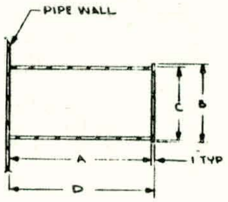

DETAIL 12-B
SCALE: 1½"=1'-0"

ITEM	A	B	C	D
FRP	3¼	12	1½	3"
POLYETHYLENE	1"	10"	1"	2"

ITEM	NO REQ'D
2 1/2" BOLT W/NUTS & WASHERS	144EA
40.8 "R GUSSET	144EA

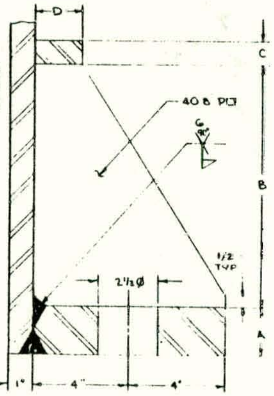

DETAIL 12-A
SCALE: 1/2

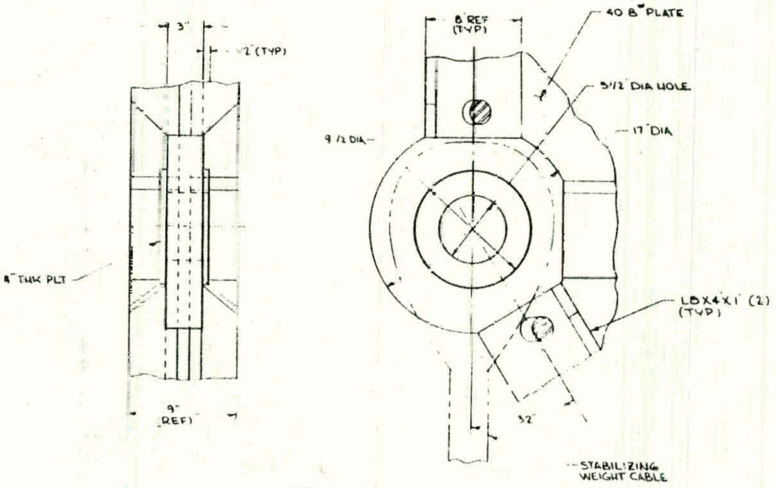

DETAIL 10-B
SCALE 1/4"=1"

GLOBAL MARINE
DEVELOPMENT Inc.

OTEC 10/40 HULL/CWP
TRANSITION

3/16"=1' & NOTED	04087 13-300	E•4087 •L006	3 2	A

LIST OF MATERIALS

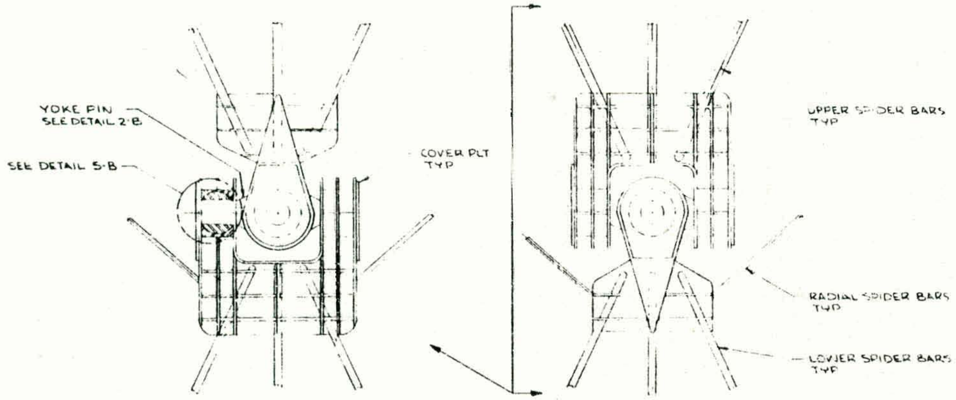

UNIVERSAL ASSEMBLY
SCALE 1/4 =1-0

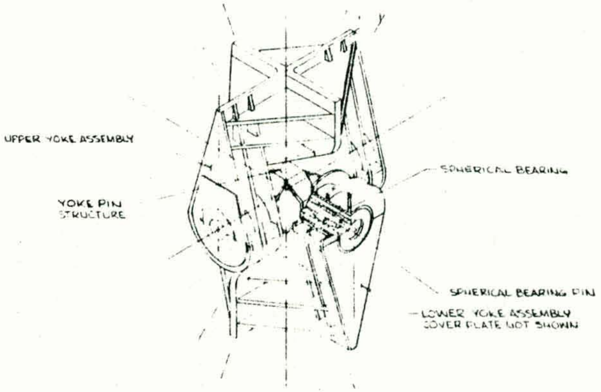

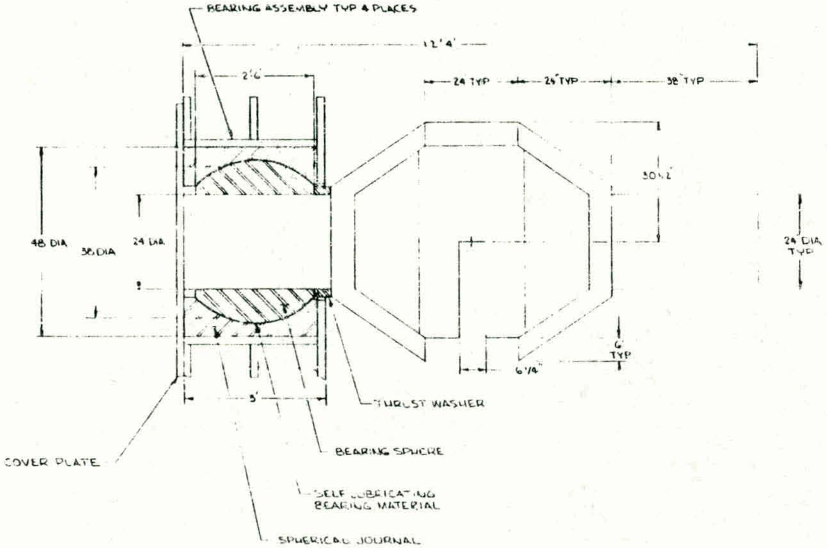

DETAIL 5-B
SCALE 1 =1-0

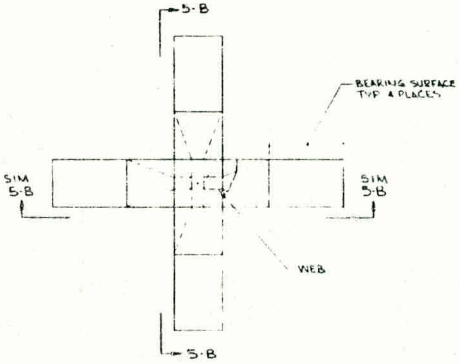

PLAN 2-B
YOKE PIN
SCALE 1/2

THIS DWG IS FOR ESTIMATING
ONLY, NOT FOR CONSTRUCTION

GLOBAL MARINE
DEVELOPMENT Inc.

OTEC 10/40 HULL/CWP
UNIVERSAL

SCALE
NOTED

DWG NO
E •4037•007

A

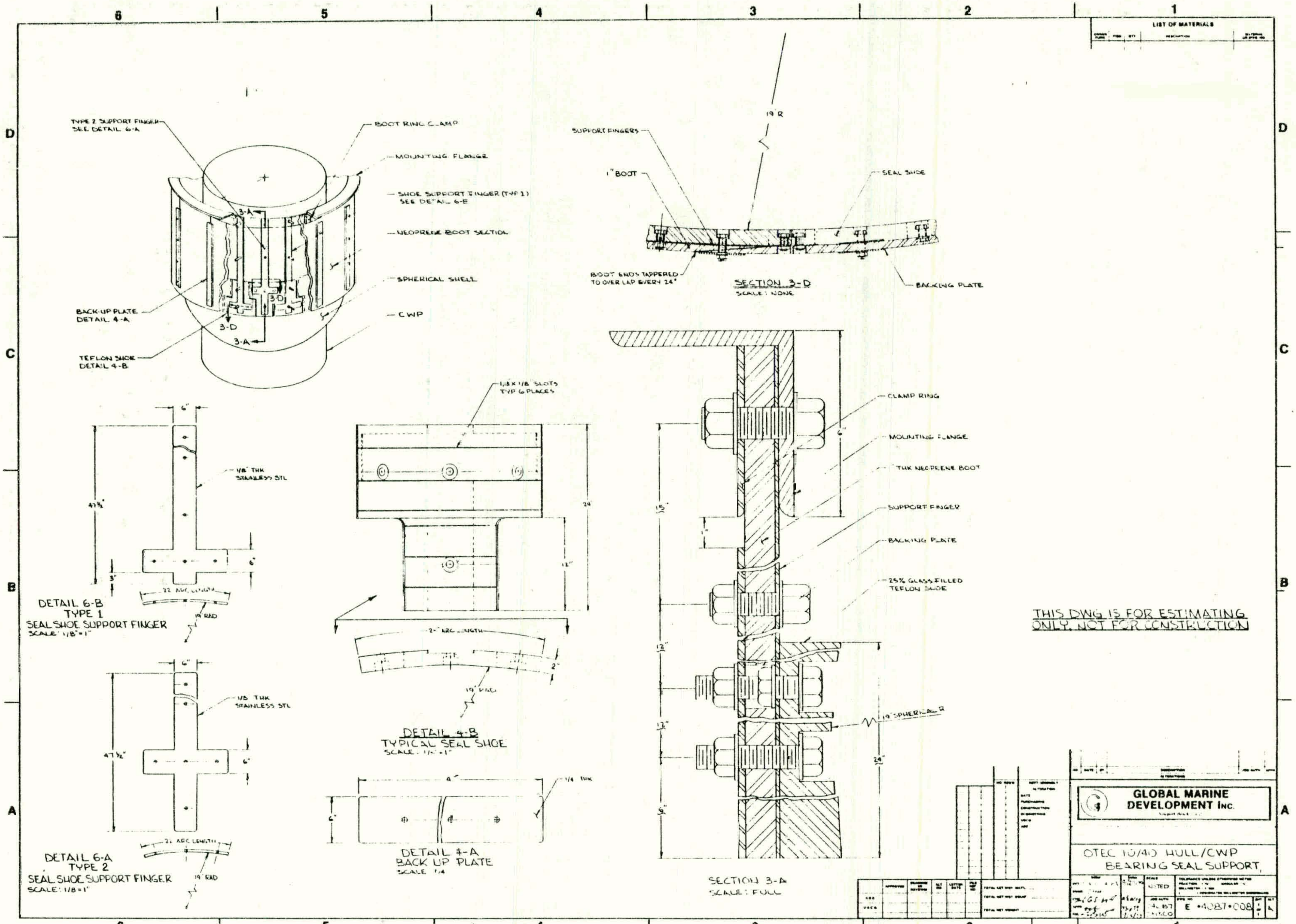
LIST OF MATERIALS
TYPE 2 SUPPORT FINGER SEE DETAIL 6-A
BOOT RING CLAMP
MOUNTING FLANGE
SHOE SUPPORT FINGER (TYP 1) SEE DETAIL 6-B
NEOPRENE BOOT SECTION
SPHERICAL SHELL
CWP
BACK-UP PLATE DETAIL 4-A
TEFLON SHOE DETAIL 4-B
3-A
3-D
19' R
SUPPORT FINGERS
1" BOOT
SEAL SHOE
BOOT ENDS TAPPERED TO OVER LAP EVERY 24"
BACKING PLATE
SECTION 3-D
SCALE: NONE
1/8 X 1/8 SLOTS TYP 6 PLACES
CLAMP RING
MOUNTING FLANGE
1" THK NEOPRENE BOOT
SUPPORT FINGER
BACKING PLATE
25% GLASS FILLED TEFLON SHOE
19' SPHERICAL R
6"
15"
12"
24"
1/8" THK STAINLESS STL
47½"
3"
22 ARC LENGTH
19' RAD
DETAIL 6-B
TYPE 1
SEAL SHOE SUPPORT FINGER
SCALE: 1/8"=1"
24" ARC LENGTH
2"
19' RAD
DETAIL 4-B
TYPICAL SEAL SHOE
SCALE: 1/4"=1"
1/4 THK
DETAIL 4-A
BACK UP PLATE
SCALE 1/4
SECTION 3-A
SCALE: FULL
DETAIL 6-A
TYPE 2
SEAL SHOE SUPPORT FINGER
SCALE: 1/8"=1"
THIS DWG IS FOR ESTIMATING ONLY, NOT FOR CONSTRUCTION
GLOBAL MARINE DEVELOPMENT INC.
OTEC 10/40 HULL/CWP BEARING SEAL SUPPORT,
SCALE NOTED
4087
E 4087-008

APPENDIX E

GMDI

REPORT OF PRELIMINARY STRUCTURAL DESIGN OF OTEC 10/40
COLD WATER PIPE SUPPORT AND
COLD WATER PIPE TRANSITIONS
(HULL/CWP TRANSITION)

13 AUGUST 1979

PREPARED FOR TRW

GLOBAL MARINE DEVELOPMENT INC.
2302 Martin Street
Irvine, California 92715

no folio

is blank

THIS PAGE

WAS INTENTIONALLY

LEFT BLANK

RPT-4087-002
REVISION 0
13 AUG 79

REPORT OF PRELIMINARY STRUCTURAL DESIGN OF OTEC 10/40 COLD WATER PIPE SUPPORT AND COLD WATER PIPE TRANSITIONS

(HULL/CWP TRANSITION)

13 AUGUST 1979

JOB/TASK #04087/031300

PREPARED BY: R. Lee

CHECKED BY: J. W. Carley

APPROVED BY: C. Schaff
J. C. Schaff
Project Manager

Yilmaz Ozudogru
Y. Ozudogru
Mgr. S/NA

SBW
S. B. Wetmore
Vice President
Engineering

DOCUMENT NO. RPT-4087-002

GLOBAL MARINE DEVELOPMENT INC.

Newport Beach, Calif.

REVISION RECORD

REV.	DATE	AUTHORIZATION	CHANGE DESCRIPTION	PAGES AFFECTED
0	8-13-79	S.B. WETMORE	INITIAL RELEASE EDC RELEASED 9-10-79	ALL

TABLE OF CONTENTS

1.0 ABSTRACT

This report is the preliminary structural design of the Hull/CWP transition, support and seal for the OTEC 10/40 cold water pipes made of FRP, polyethylene, and elastomer materials.

2.0 OBJECTIVE

The object of the analysis is to perform a preliminary structural design of the universal spider support concept. This analysis is to also address as many possible problems as can be seen at this stage to insure that a major design or assembly impasse will not be reached when a more detailed design is made. No attempt was made to cover all the details of the design. The specific parts of the transition covered in this analysis are listed below and shown in Figure 1, (details of the analysis are provided in the Appendix as indicated).

1) Universal joint design (Appendix A and B)
2) Spider bars supporting the coldwater pipe (Appendix C).
3) Steel transition sections 1 and 2 (Appendix D)
4) Flanges connecting transition pieces (polyethylene) or cold water pipe to transition (elastomer & FRP), (Appendix E).

FIGURE 1

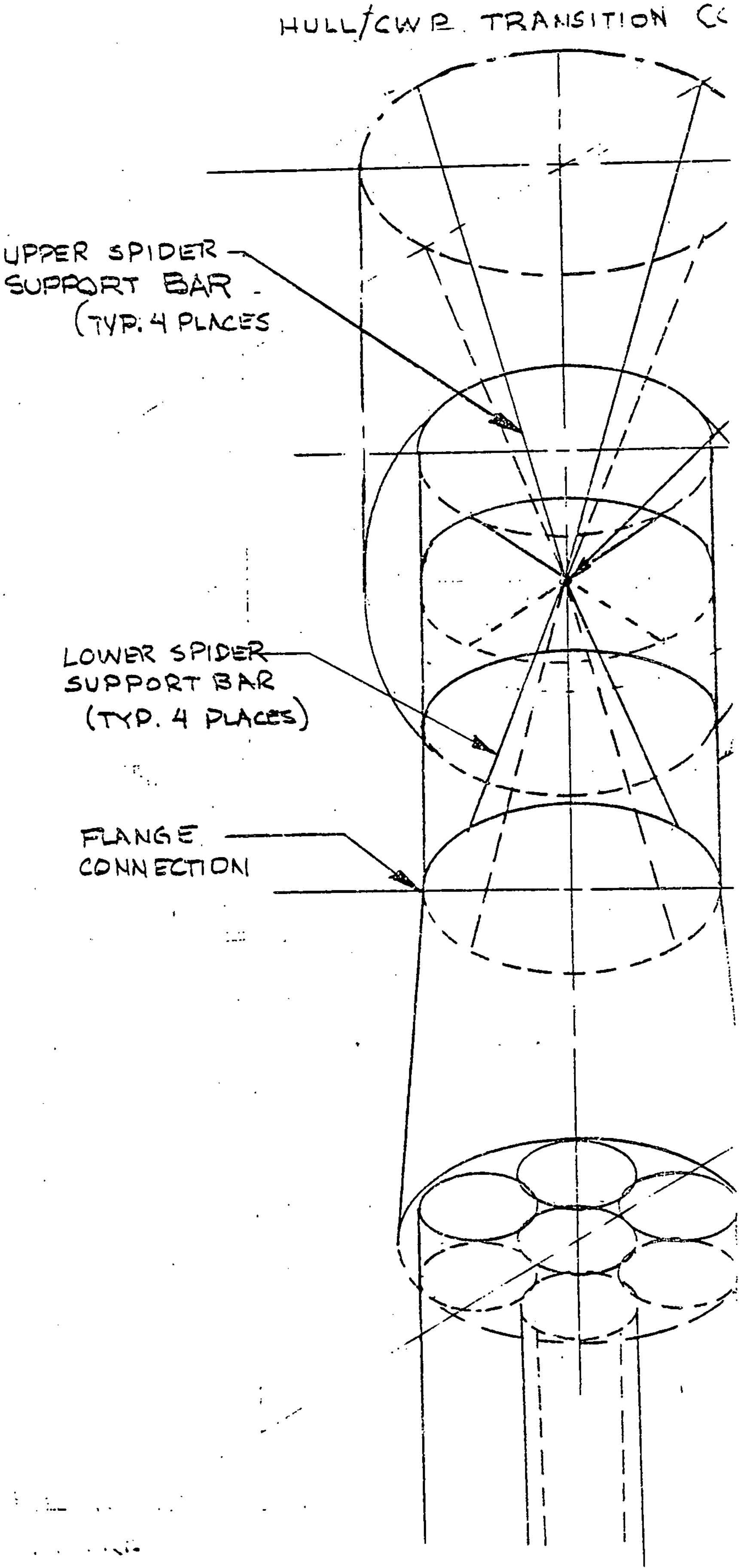
HULL/CWP TRANSITION C
UPPER SPIDER SUPPORT BAR (TYP. 4 PLACES
LOWER SPIDER SUPPORT BAR (TYP. 4 PLACES)
FLANGE CONNECTION

FIGURE 1

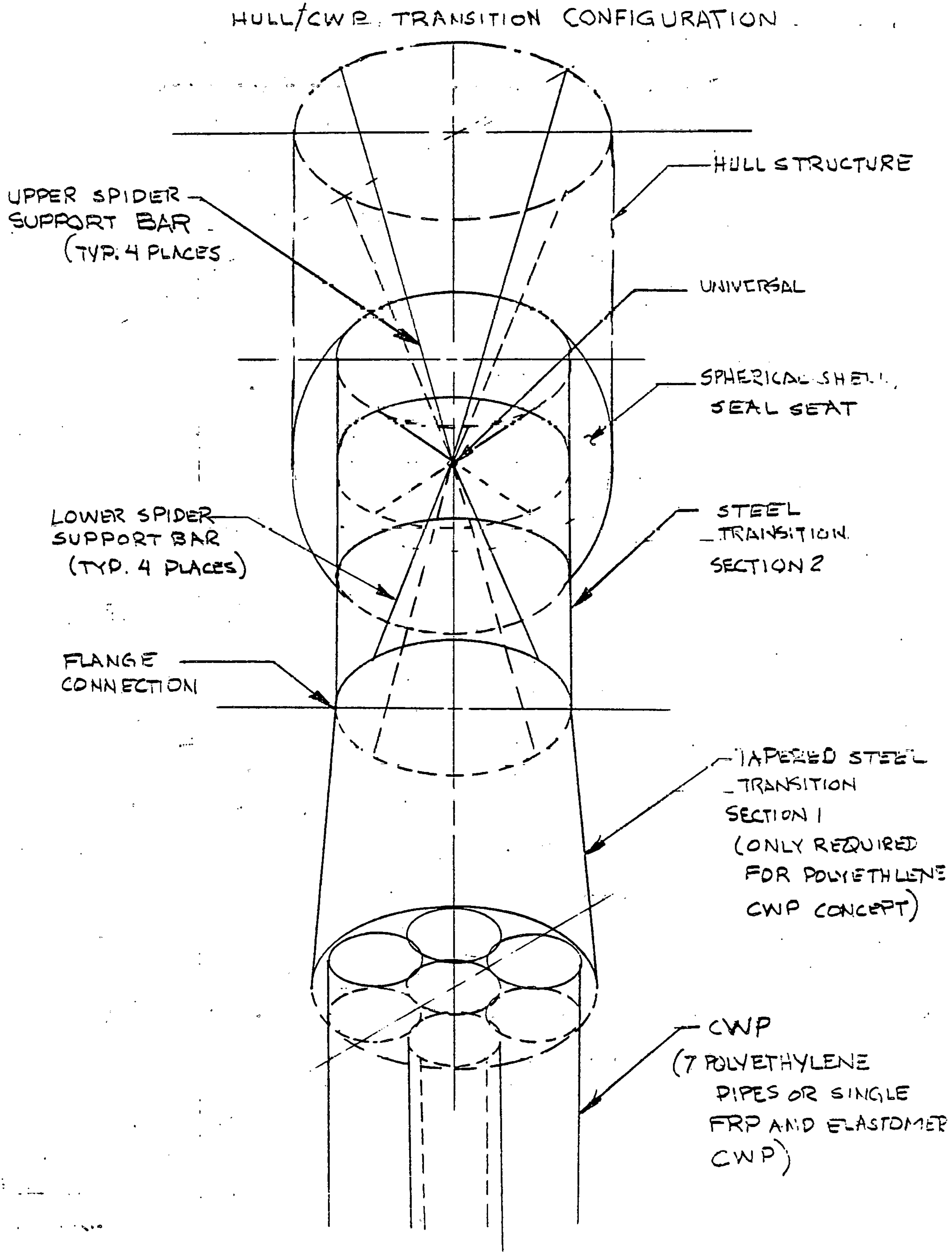
HULL/CWP TRANSITION CONFIGURATION
HULL STRUCTURE
UPPER SPIDER SUPPORT BAR (TYP. 4 PLACES
UNIVERSAL
SPHERICAL SHELL SEAL SEAT
LOWER SPIDER SUPPORT BAR (TYP. 4 PLACES)
STEEL TRANSITION SECTION 2
FLANGE CONNECTION
TAPERED STEEL TRANSITION SECTION 1 (ONLY REQUIRED FOR POLYETHLENE CWP CONCEPT)
CWP (7 POLYETHYLENE PIPES OR SINGLE FRP AND ELASTOMER CWP)

5) Cable termination for the stabilizing weight in polyethylene tapered steel transition section 1,(Appenix F).

6) 38 ft. diameter sphere used as a seat for the seal between the cold water pipe and the vessel hull.

3.0 DESIGN REQUIREMENTS

The safety factor for the design of all parts of the transition is set at 1.5. The universal was designed with the maximum in service loading of 4 million pounds along the axis of the cold water pipe. The upper and lower spider support bars were designed to withstand the maximum axial load shown in Table 1. The flange connection also designed to additionally withstand a bending stress or moment calculated from moment and location shown in Table 1. The CWP transition parts must also be able to resist the maximum in service load or the maximum axial load at a maximum of 25° out of vertical where this effects the design. Shear and torsional loads as determined by TRW computer analysis of the CWP were small and were ignored for this design analysis.

TABLE 1. CWP CONCEPTS AND LOADS

CWP Concept	Axis of Rotation	Maximum Axial Load (lb)	Minimum Axial Load (lb)	Moment and Location
FRP	24°	3.64×10^6	0.428×10^6	61791 ft* kips 80' below top
Elastomer (Steel Cables)	22.6°	5.4×10^6	2.73×10^6	-0-
Elastomer (Fabric)	23.0°	5.89×10^6	2.31×10^6	-0-
Polyethylene	16.5°	2.3×10^6	2.2×10^6	102,000 ft kips 280' below top

* Calculated from 5.0 ksi bending stress supplied by TRW and section modulus of FRP of 148,278 in^3.

4.0 RESULTS

The final configuration for the items listed in paragraph 2.0 above are listed in Table 2. The wall thickness of both steel transition sections is one inch based on handling requirements. The flange bolts are all 2½ inch diameter. For all CWP concepts the straight steel transition section 2 has the dimensions of 30 ft. I.D. and an overall length of 40'-6". The polyethylene tapered steel transition section 1 has a top inside diameter of 30 ft. and a bottom diameter of 42'-2", with an overall length of 36 ft. The sealing sphere for

TABLE 2 SIZES AND STRESSES*

Material	Flange thickness (inches)	Bolt stress (ksi)	Upperspider support bar diameter (inches)	lowerspider support bar diameter (inches)
FRP	3¼	45.5	15	8
poly-ethylene	2	25.0	12	6½
Elastomer	2½	36.0	19	10

* These properties have been developed in Appendices C & E

for each CWP concept is 38 ft O.D. with a one inch wall thickness. See page G3 of Appendix G for the spacing and details of stiffening on the sphere. Cable termination supports in the tapered steel transition section 1 are shown and analyzed in Appendix F.

5.0 TECHNICAL DISCUSSION

This report reflects the preliminary design of the Hull/CWP transition system for the polyethylene, fiberglass reinforced plastic and elastomeric CWP concepts. Figure 1 shows the general arrangement of the polyethylene transition. The loadings that were used for the analysis do not include shear and/or torsion loads. The spider assemblies are analyzed as trues members by hand calculations. A detailed analysis which may include a finite element analysis must be made before a design could be finalized. The connecting bars running from the universal upward, (upper spider support bars), are designed assuming that the total axial pipe load must be resisted by one bar. The bars running from the universal downward, (lower spider support bars), are designed assuming the axial load of the cold water pipe will be shared equally by all four bars. The spiders are designed for tension loads only. If compression loads are applied the bars will need to be investigated for these loadings.

The transition pipe is designed with axial and bending loads supplied by TRW from the computer analysis of the various CWP concepts. The polyethylene pipe material requires two transition sections. The first to collect the water from the 7-12 ft diameter pipes and reduce to a 30 ft diameter pipe and also support cable termination brackets. The second section has the lower spider assembly and the spherical seal attachments. The conceptual design choose the minimum length of each transition approximately equal to the largest diameter on the transition piece. The fiber reinforced material and elastomer material require only the straight transition section for the attachment to the hull. Analysis was not performed of the spider support bar connection points.

6.0 REFERENCES

1) AISC Manual of Steel Construction, 7th edition.
2) Dwg. #4087-L001 titled OTEC 10/14 Min-CWP/ Hull Transition Gimbal.
3) Mark's Standard Handbook for Mechanical Engineers, 8th Edition.
4) Formulas for Stress and Strain, 4th edition, Roark.

5) Principals of Naval Architecture.

6) Cold-Formed Commentary.

7) Formulas for Stress and Strain, 5th edition, Roark.

8) Theory and Analysis of Plates, Szilard.

APPENDIX "A"

FORGED UNIVERSAL AND SPIDER ASSEMBLY ANALYSIS

<u>GIVEN</u>: TYPE OF SUPPORT CONFIGURATION BELOW W/ 4000 K LOADING DOWNWARD

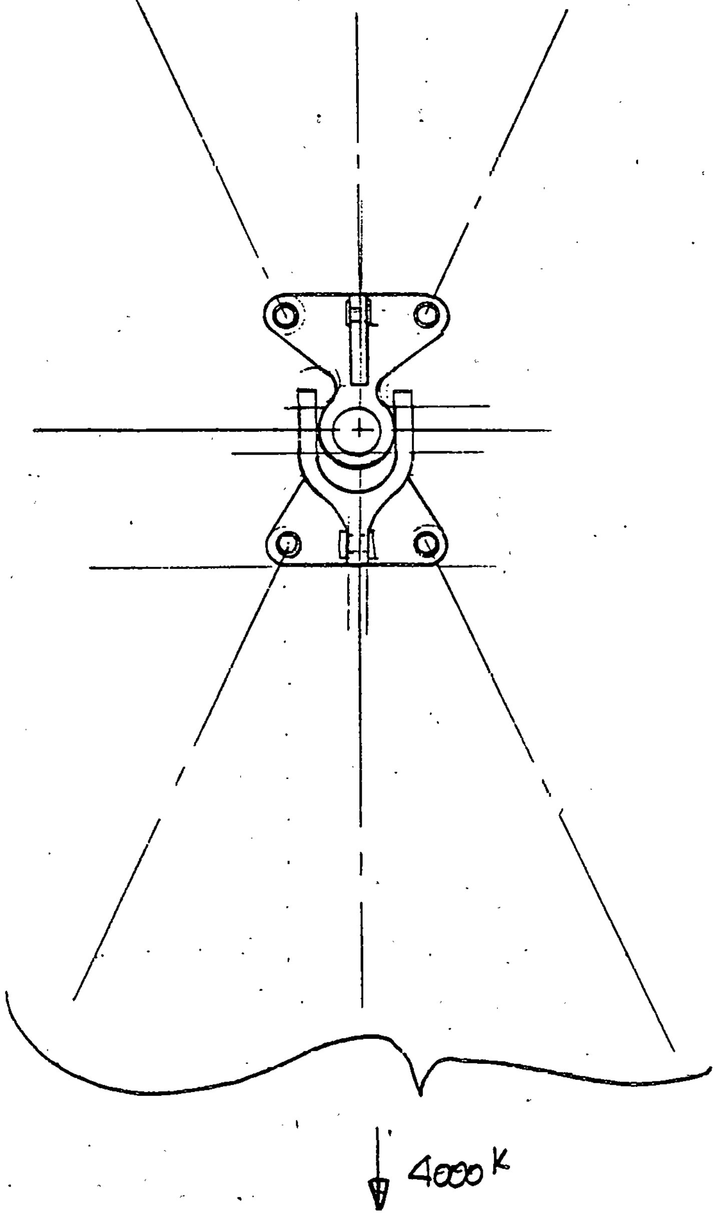

<u>PROBLEM</u>: DETERMINE THE SIZE OF THE FORGED UNIVERSAL (SPIDER) CONNECTION.

RRL

04037
A-2/13

11 JULY 1979

COLDWATER PIPE SUPPORTS 10/40

SPIDER SUPPORT

FORGED SECTIONS

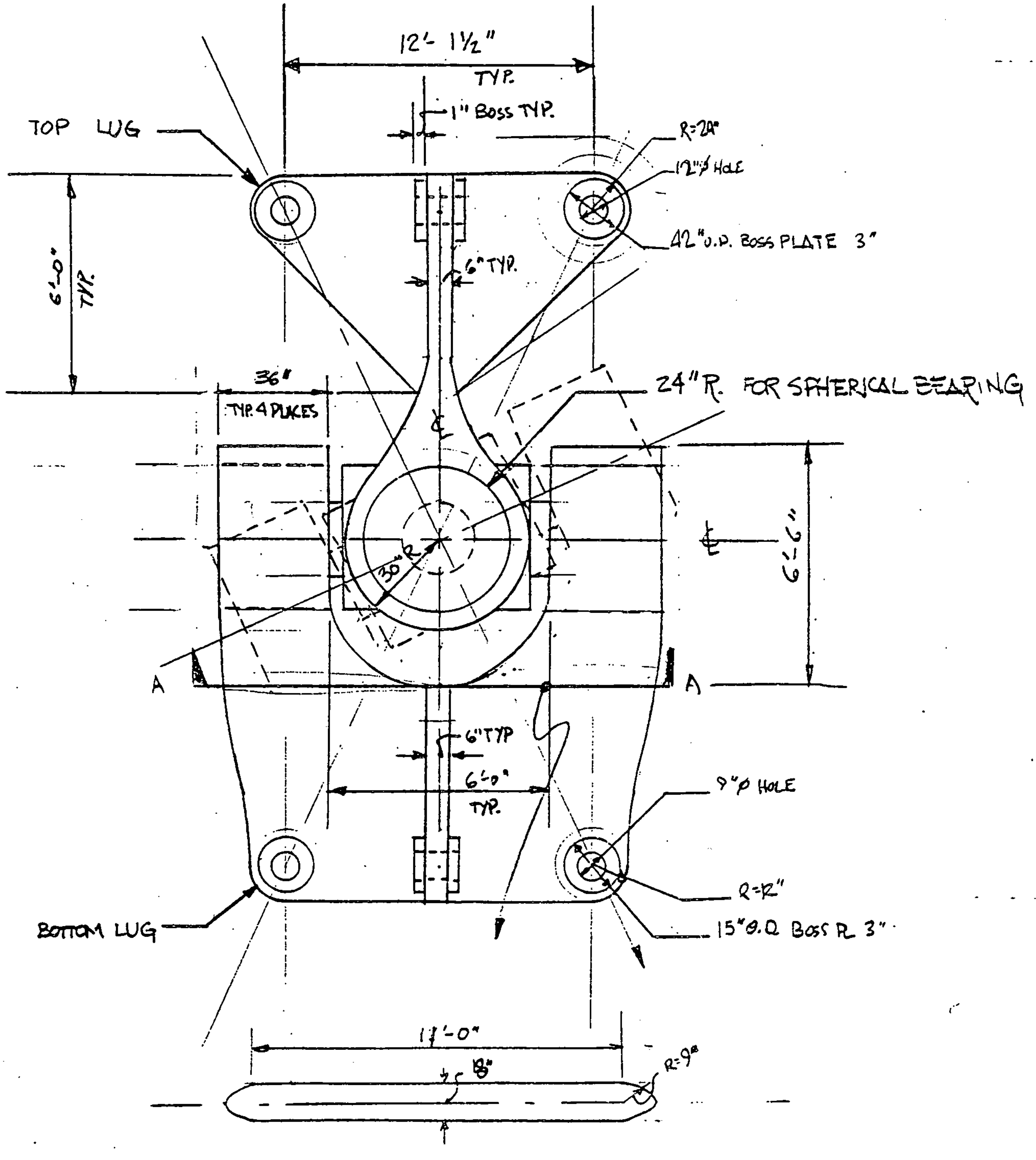

SECTION A-A

RRL

04037

A3/13

12 JULY 1979 COLD WATER PIPE SUPPORTS 10/40

SPIDER SUPPORT @ 155° CONT'D

$$\sigma : P/A + \frac{M}{S} : \frac{3625.23}{2630.4} + \frac{(6761.87)(12)}{77\ 00.56} = \underline{11.92(3)}$$

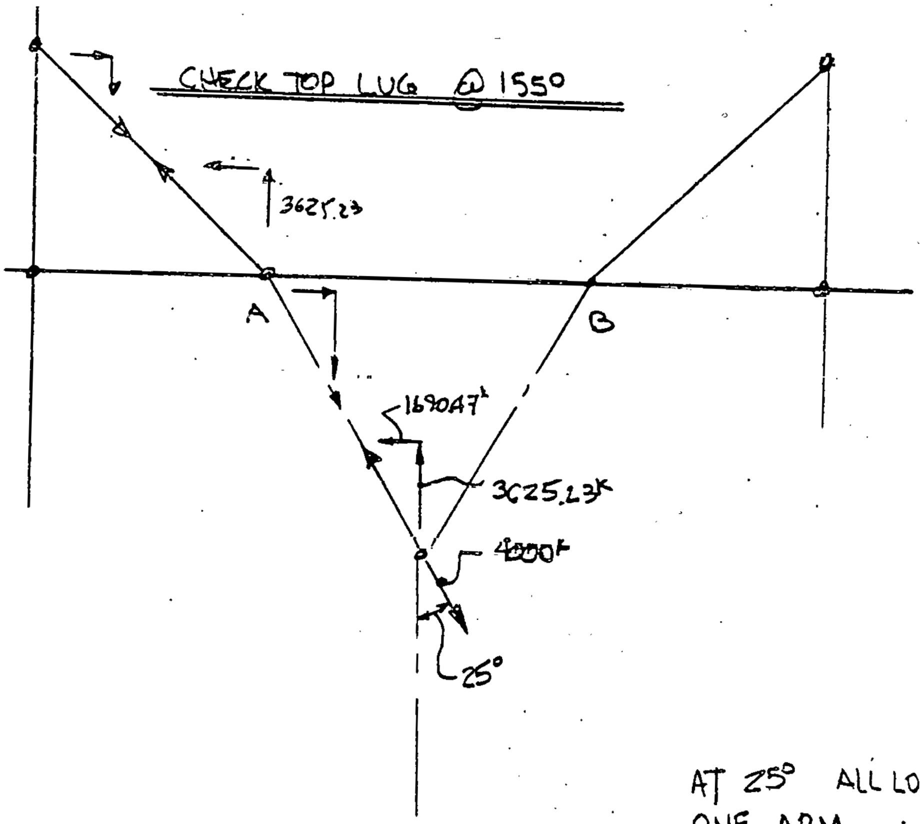

AT 25° ALL LOADING GOES INTO ONE ARM WORST CASE.

RRL

04087
A-4 /13

12 JULY 1979 COLDWATER PIPE SUPPORTS 10/40

SPIDER SUPPORT @ 180°

FORGED FORKED SECTIONS

CHECK SHEARING OUT BOTTOM LUG REF PAGE 4

$$\tau = \frac{V}{2A} = \frac{2000}{(2)(6)(36)} = \underline{4.63\ \text{KSI}}$$

CHECK BEARING OF BOTTOM LUG

$$\sigma = \frac{P}{A} = \frac{2000}{(36)(48)} = \underline{1.16\ \text{KSI}}$$

SPIDER SUPPORT @ 155°

CHECK ADDITIONAL BENDING AT SECTION A-A

$$\sigma = \frac{P}{A} + \frac{M}{S}$$

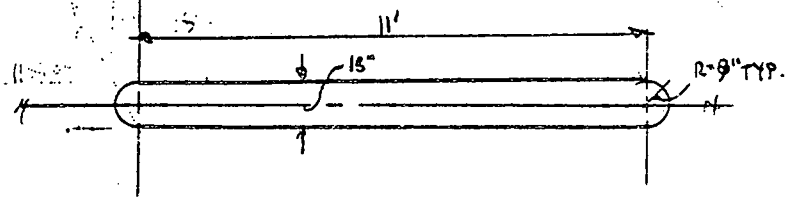

$$I_{xx} = \frac{(11)(12)(18)^3}{12} + \frac{(\pi)(18)^4}{64} = \underline{69305.00}\ \text{IN}^4 \quad \therefore S_{xx} = \frac{69305}{9} = \underline{7700.56}\ \text{IN}^3$$

$$A = (\pi)(9)^2 + (11)(12)(18) = \underline{2630.47}\ \text{IN}^2$$

$$M_{@\text{WEAK AXIS}} = (P)(L) = (4000)(\sin 25°)(40\ \text{FT}) = \underline{6761.89\ \text{FT}}\ \text{KIPS}$$

$$P_{@\text{WEAK AXIS}} = (4000)(\cos 25°) = 36\underline{25.23\ \text{KIPS}}$$

RRL

04037
A-5/13

12 JULY 1977 COLDWATER PIPE SUPPORTS 10/40

SPIDER SUPPORT @ 155° CONT'D

CHECK SHEARING OF EAR

REF PAGE 4

$$\tau = \frac{V}{A} = \frac{3625.23}{(6)(7)(12)} = 7.19\text{ksi}$$

CHECK TENSION OF EAR

$$\sigma = P/A = \frac{1690.97}{(6)(7)(12)} = 3.35\text{ksi}$$

CHECK TOP LUG SHEAR OUT

$$\tau = \frac{V}{2A} = \frac{4000}{[illegible](3)} = 10.1\text{ksi}$$

CHECK TOP LUG BEARING

$$\sigma = P/A = \frac{4000}{(12)(12)} = 27.78\text{ksi}$$

RRL

04037
A-6/13

25 JULY 1979 COLDWATER PIPE SUPPORTS 10/40

SPIDER SUPPORT @ 155° CONT'D

CHECK SHEAR DIRECTLY BEHIND LUG

$$\tau = \frac{V}{A} = \frac{3625.23}{(6)(5.5)(12)} = 9.15 \text{ ksi}$$

CHECK TENSION DIRECTLY BEHIND LUG

$$\sigma = \frac{P}{A} = \frac{1690.47}{(6)(5.5)(12)} = 4.27 \text{ ksi}$$

RRL

04087 / A-7 /13

11 JULY 1979

COLDWATER PIPE SUPPORTS 10/40

SPIDER SUPPORT

FORGED CENTER SECTION

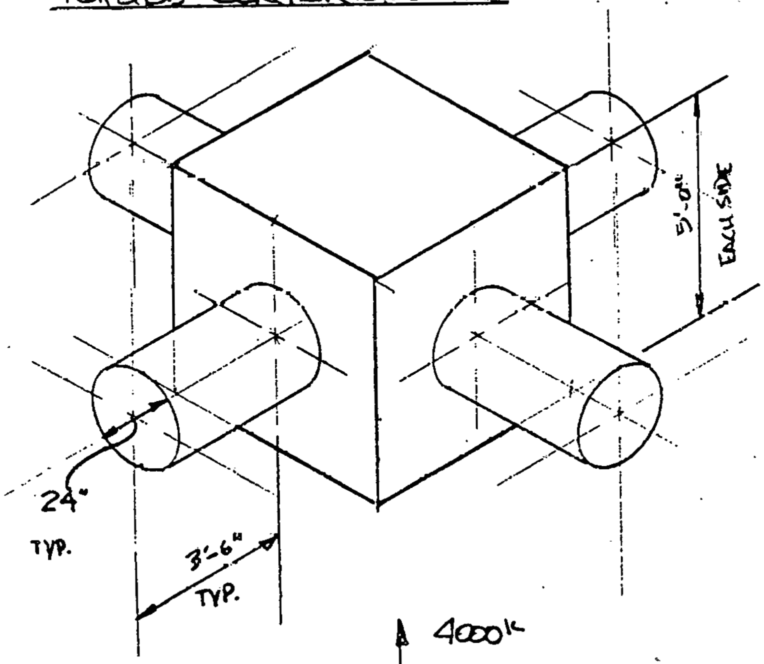

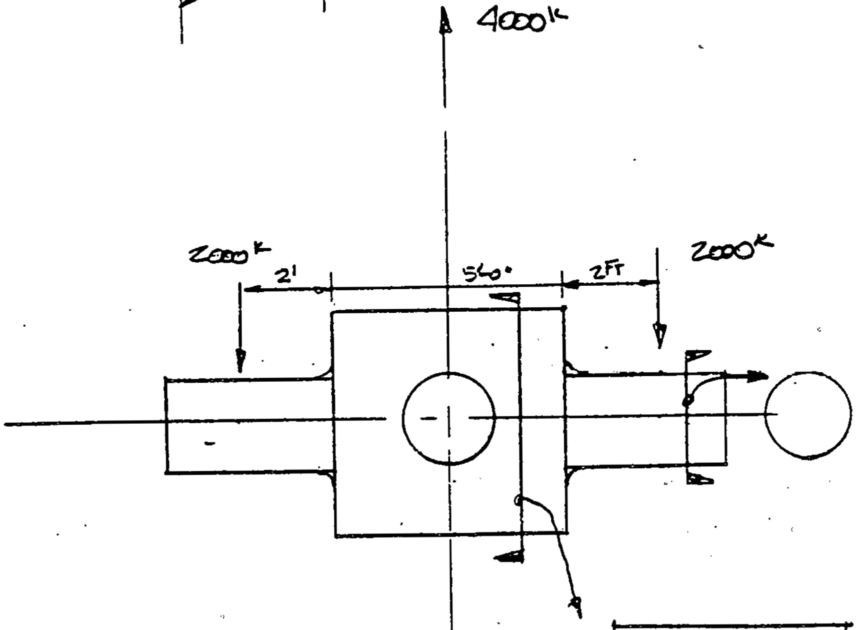

$A: \pi\left(\frac{24}{2}\right)^2 = 452.39\,IN^2$

$I_{xx} : I_{yy} : \frac{\pi(24)^4}{64} = 16286.02\,IN^4$

$S_{xx} : S_{yy} : \frac{16286.02}{12} = 1357.17\,IN^3$

$M_{@BLOCK} : (P)(L) : (2000)(2) = 4000\,FT\,K$

$M_{@℄} : (P)(L) : (2000)(4.5) = 9000\,FT\,K$

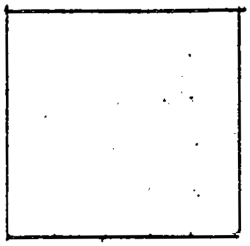

$A = (60)^2 = 3600\,IN^2$

$I : \frac{(60)(60)^3}{12} = 1080000.\,IN^4$

$S_{xx} : \frac{1080000}{30} = 36000\,IN^3$

SPIDER SUPPORT CONT'D

DETERMINE STRESS CONCENTRATION FACTOR

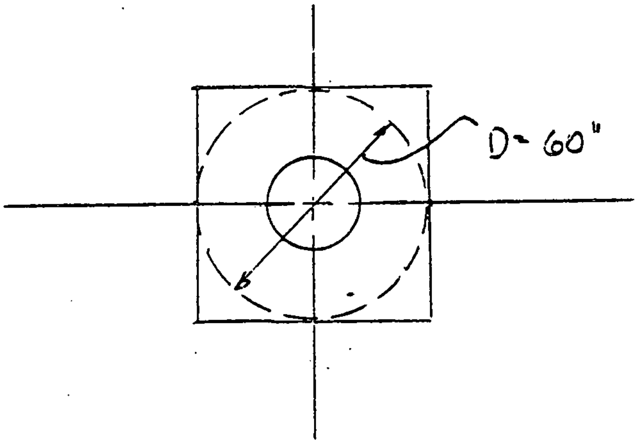

REF: FORMULAS FOR STRESS AND STRAIN BY: ROARK, YOUNG
PAGE 600 TABLE 37 TYPE 17.

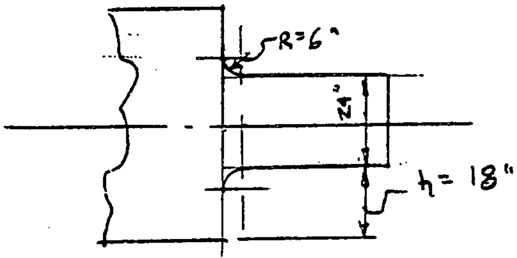

MAGNIFCATION FACTOR

$$K = K_1 + K_2\left(\frac{2h}{D}\right) + K_3\left(\frac{2h}{D}\right)^2 + K_4\left(\frac{2h}{D}\right)^3$$

$K_1 = 1.225 + 0.831\sqrt{h/r} - 0.010(h/r)$

$K_1 = 1.225 + 0.831\sqrt{3} - (0.010)(3) = 2.63$

$K_2 = -3.790 + 0.958\sqrt{h/r} - (0.257)(h/r)$

$K_2 = -3.790 + 0.958\sqrt{3} - 0.257(3) = -2.90$

$K_3 : 7.374 - 4.83\sqrt{h/r} + 0.862(h/r)$

$K_3 : 7.374 - 4.83\sqrt{3} + 0.812(3) = 1.59$

$K_4 : -3.809 + 3.046\sqrt{h/r} - 0.595(h/r)$

$K_4 : -3.809 + 3.046\sqrt{3} - 0.595(3) = -0.32$

$$K = 2.63 + (-2.90)\left(\frac{2(18)}{60}\right) + 1.57\left(\frac{(2)(19)}{60}\right)^2 + (-0.32)\left(\frac{(2)(18)}{60}\right)^3 = \underline{\underline{1.39}}$$

RRL

04097.
A-9/13

12 JULY 1979 COLDWATER PIPE SUPPORTS 10/40

SPIDER SUPPORT CONT'D

FORGED CENTER SECTION

CHECK BENDING @ PIN IN BLOCK

$\sigma = \frac{M}{S} = \frac{(4000)(12)}{1357.17} =$ 35.37 ksi

STRESS CONCENTRATION FACTOR: 1.39

$\sigma_{ABS} = (35.37)(1.39) =$ 49.28 ksi

CHECK SHEAR

$\tau = \frac{V}{A} = \frac{2000}{452.39} =$ 4.42 ksi

CHECK BENDING @ CENTER OF BLOCK

$\sigma = \frac{M}{S} = \frac{(9000)(12)}{36000} =$ 3.0 ksi

RRL

04037
A-10/13

12 JULY 1979 COLDWATER PIPE SUPPORTS 10/40

SPIDER SUPPORT CONT'D

LUG & BAR ASSEMBLIES

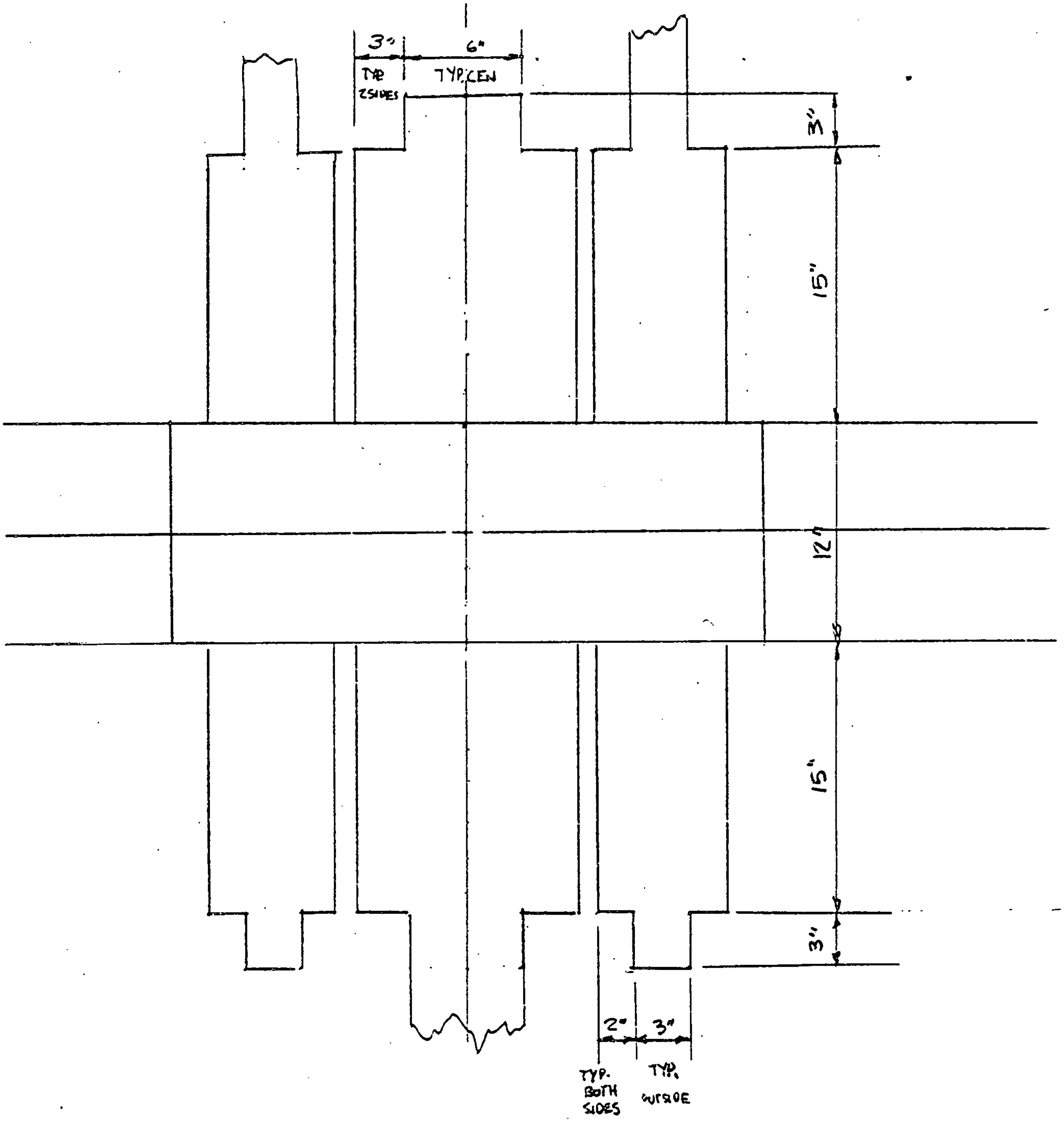

RR

04087
A-11/13

12 JULY 1971 COLDWATER PIPE SUPPORTS 10/40

SPIDER SUPPORT CONT'D

CHECK BAR LUG FOR SHEAR

$$\tau : \frac{V}{2A} : \frac{2000}{(2)(18)(3)+(.7)(2)(4.5)} = \underline{8.77\,KSI}$$

CHECK BAR LUG FOR BEARING

$$\nabla : \frac{P}{A} : \frac{2000}{(7)(12)} = \underline{23.81\,KSI}$$

CHECK SHEAR ON PIN

$$\tau : \frac{V}{A} : \frac{2000}{(\pi)(1)^2} = \underline{17.68\,KSI}$$

SPIDER SUPPORT CONT'D

CHECK BAR LUG FOR BEARING

ASSUME COSINE DISTRIBUTION

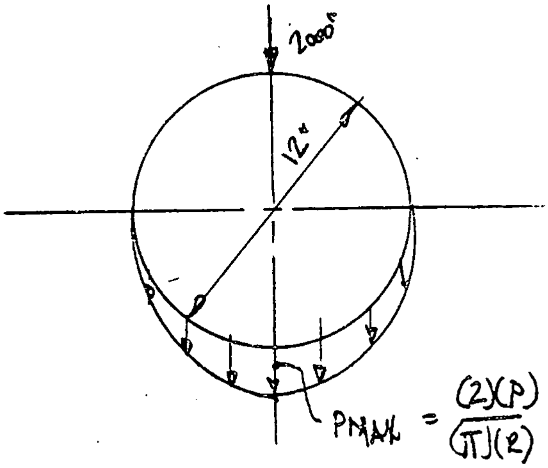

$$P_{MAX} = \frac{(2)(P)}{(\pi)(R)}$$

P=2000
R=6"
W=7"

$$P_{MAX} = \frac{(2)(2000)}{(\pi)(6)} = 212.21 \text{ k/IN.}$$

$$\sigma_{AXIAL}: \frac{P_{MAX}}{W} : \frac{212.21}{7} = \underline{30.32\text{ksi}}$$

CHECK PIN IN BENDING

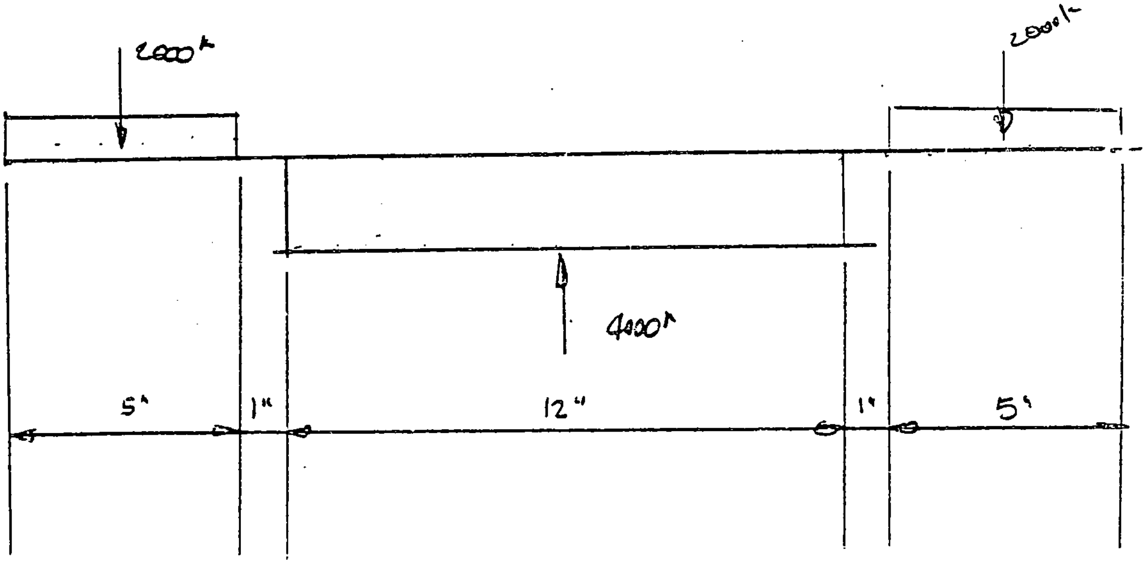

RRL

04087

A-13 /13

25 JULY 1979 COLDWATER PIPE SUPPORTS 10/40

SPIDER SUPPORT CONT'D

CHECK BENDING IN PIN CONT'D

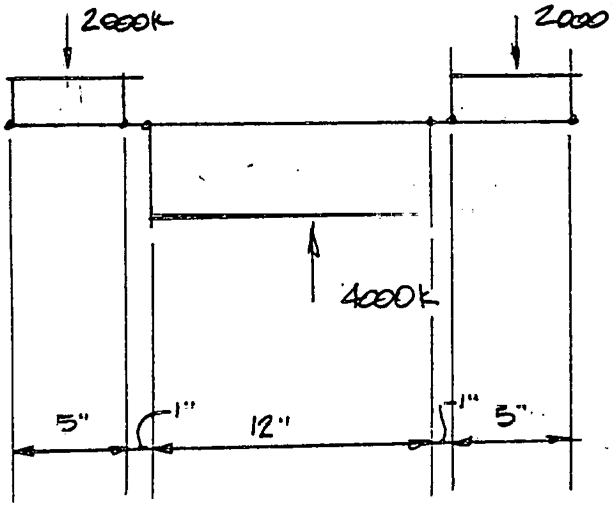

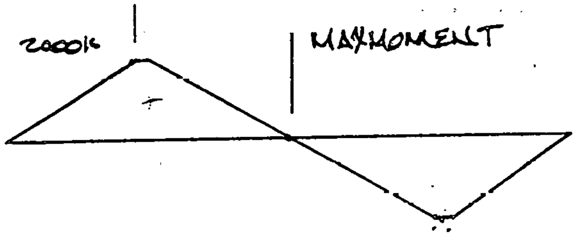

~~AREA:~~

$M_{MAX}: (\frac{1}{2})(2000)(5) + (2000)(1) + (\frac{1}{2})(2000)(5) = $ 12000 " KIPS

12"∅ PIN: $I_{xx}: \frac{\pi (D)^4}{64} : \frac{(\pi)(12)^4}{64} = 1017.88 \text{ IN}^4$

$S_{xx}: \frac{I}{c} : \frac{1017.88}{6} = 169.65 \text{ IN}^3$

$\sigma : \frac{M}{S} : \frac{12000}{169.65} = 70.74 \text{ KSI}$

APPENDIX "B"

DESIGN AND ANALYSIS OF WELDED UNIVERSAL

16 JULY 1979

COLDWATER PIPE SUPPORTS 10/40

GIVEN: TYPE OF SUPPORT CONFIGURATION BELOW W/4000^k DOWNWARD W/MAX ANGLE OUT OF VERTICAL CHANGE OF 25°

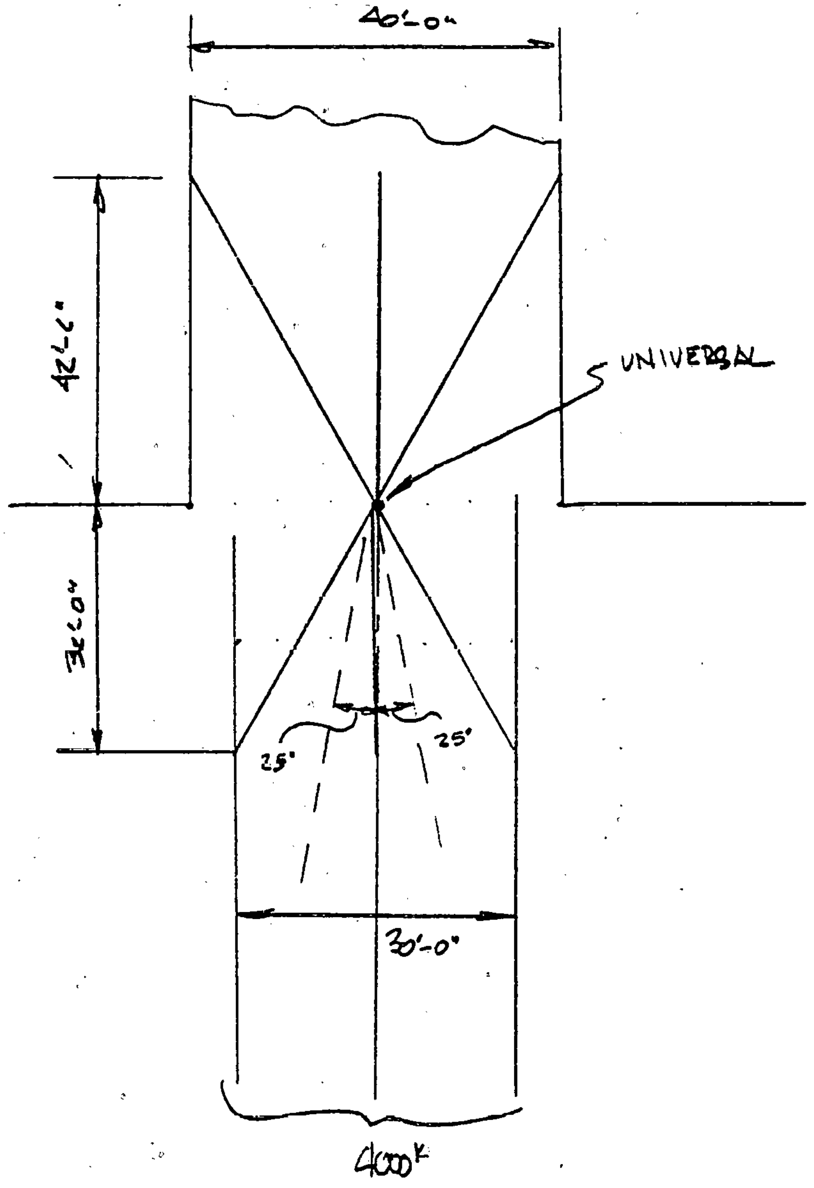

PROBLEM DETERMINE A CONFIGURATION FOR A WELDED UNIVERSAL.

RRL

CA037
B-2 /10

18 JULY 1979

COLDWATER PIPE SUPPORTS 10/40

WELDED UNIVERSAL JOINT

SCALE: 1/4" = 1'-0"

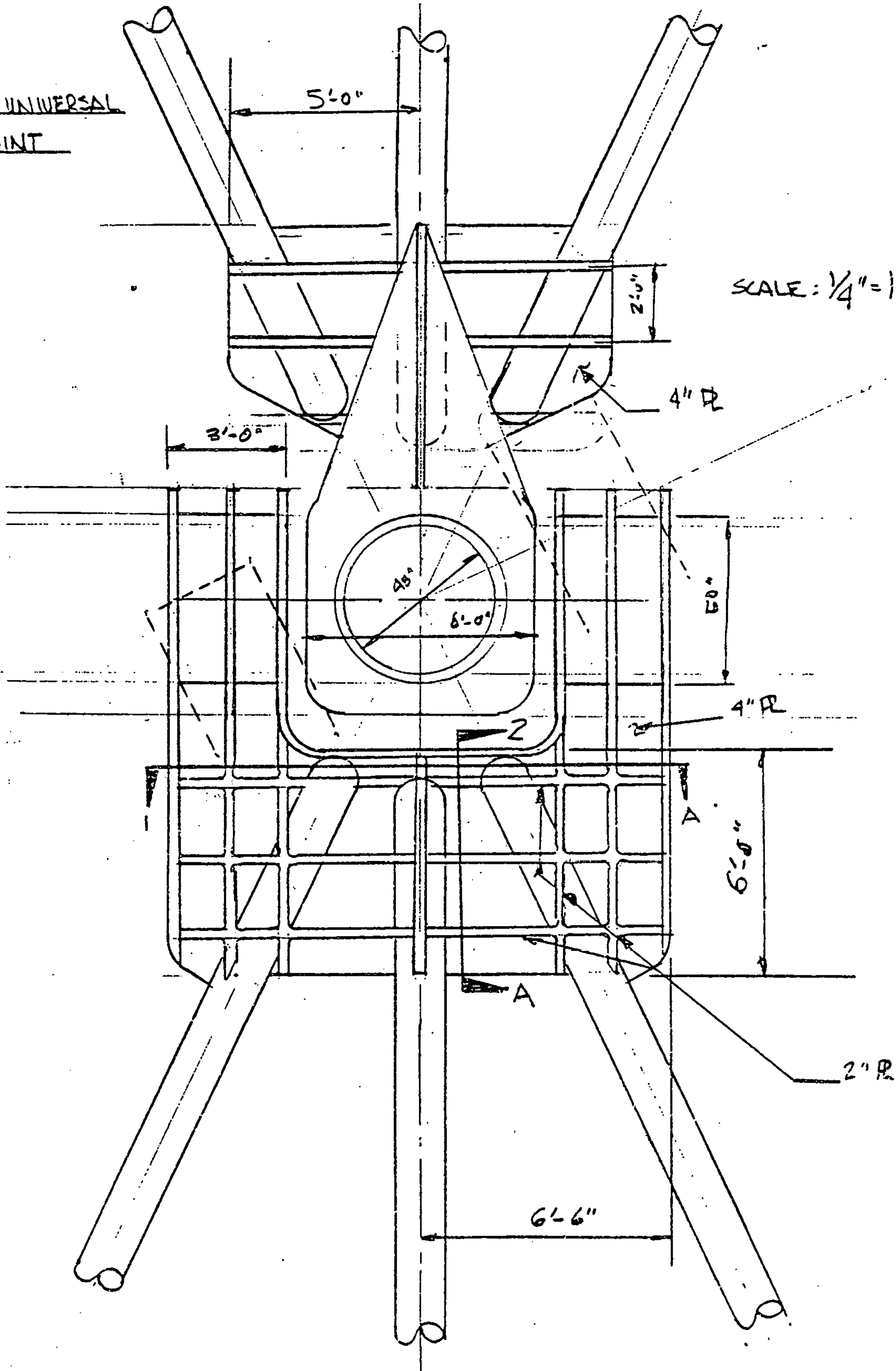

PLATE SIZING & X-SECTION CHECKS

SECTION 1-A

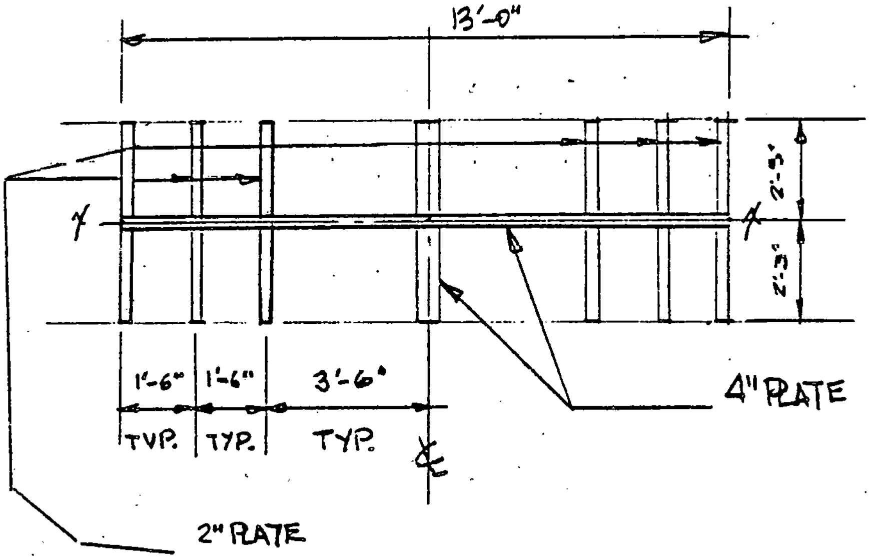

$$I_{xx}: \frac{(6)(2)(54)^3}{12} + \frac{(4)(54)^3}{12} + \frac{(140)(4)^3}{12} = \underline{210{,}698.67\,IN^4}$$

$$S_{xx}: I/_{h/2} : \frac{210{,}698.67\,IN^4}{27} = 7803.65\,IN^3$$

$$AREA: (6)(2)(54) + (4)(54) + (140)(4) = 1424.0\,IN^2$$

MOMENT AND AXIAL FORCE ON THE SECTION

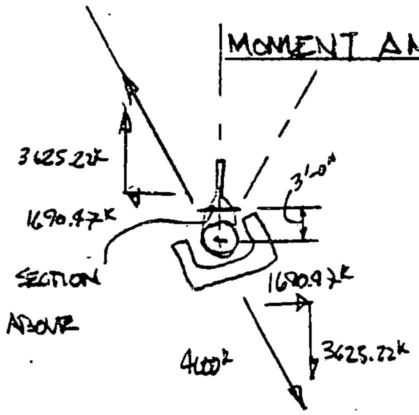

$$M_{@SECTION}: (3.0FT)(1690.47) = 5071.41\ FT\ KIPS$$

$$P_{AXIAL}: 3625.22k$$

PLATE SIZING & X-SECTION CHECKS CONT'D

SECTION I-A CONT'D

$$\sigma_{BENDING} : M/S : \frac{(5071.41)(12)}{7803.65} = \underline{7.80\ ksi}$$

$$\sigma_{AXIAL} : P/A : \frac{3625.22}{1424} = \underline{2.55\ ksi}$$

$$\sigma_{TOTAL} : \sigma_{BENDING} + \sigma_{AXIAL} : 7.80 + 2.55 = \underline{10.35\ ksi} \leftarrow$$

CHECK SHEAR :

$$\tau_s : \frac{V}{A} : \frac{1690.47}{(6)(54)(2)+(54)(4)} = \underline{1.96\ ksi} \leftarrow$$

PLATE SIZING & X-SECTION CHECKS CONT'D

SECTION 2-A

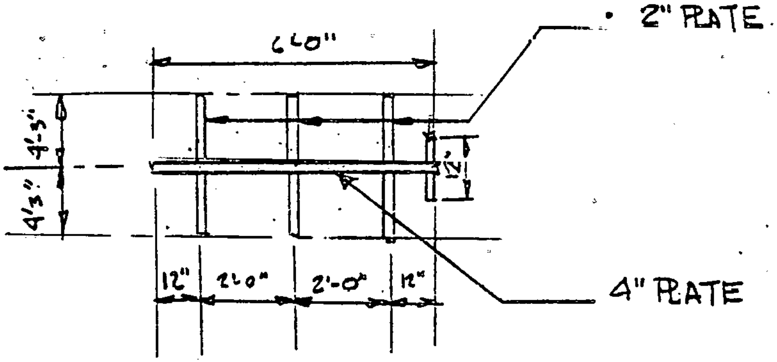

$$I_{xx}: \frac{(3)(2)(102)^3}{12} + \frac{(2)(12)^3}{12} + \frac{(64)(4)^3}{12} = \underline{531,233.33 \text{ IN}^4}$$

$$S_{xx}: I_{xx}/_{h/2} : \frac{531,233.33}{51} = \underline{10416.34 \text{ IN}^3}$$

$$\text{AREA}: (3)(2)(102) + (2)(12) + (64)(4) = \underline{892 \text{ IN}^2}$$

MOMENT AND SHEAR ON SECTION

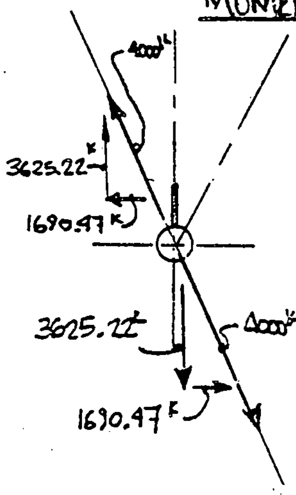

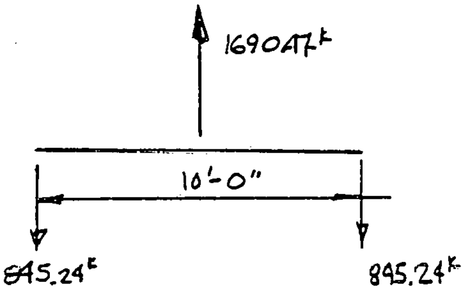

RRL

C4097
B-6/10

30 JULY 1979 COLDWATER PIPE SUPPORTS 10/40

CHECK IN PLANE STRESSES OF TRANSVERSE GUSSETS

TYPICAL GUSSET

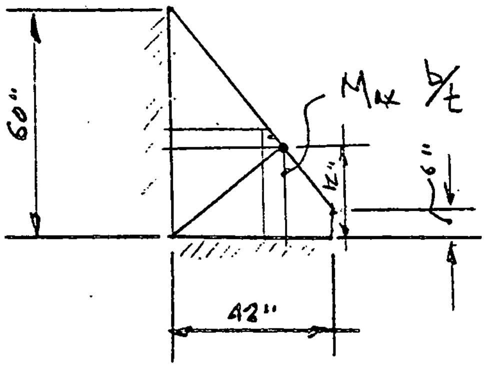

Max b/t : $24/2 = 12 \le 95/\sqrt{F_y}$

O.k.

b/t RATIO O.k.

RRL

04087

B-7/10

18 JULY 1979 COLDWATER PIPE SUPPORTS 10/40

PLATE SIZING & X-SECTION CHECKS CONT'D

SECTION 2-A CONT'D

$M_{@℄\text{ OF STRUCTURE}} : (845.24)(.5) = \underline{4226.20\text{ FT KIPS}}$

SHEAR MAX. : $\underline{845.24^k}$ FOR 2" PLATES

SHEAR MAX: $\underline{3625.26^k}$ FOR 4" PLATES

$$\sigma_{BENDING} : M/S : \frac{(4226.20)(12)}{10416.34} = \underline{4.87\text{ KSI}}$$

$$\tau_{2"\text{ PLATES}} : \frac{V}{A} : \frac{845.24}{(3)(102)(2)(\text{[illegible]})(2)} = \underline{1.33\text{ KSI}}$$

$$\tau_{4"\text{ PLATE}} : \frac{V}{A} : \frac{3625.26}{(4)(72)} = \underline{12.59\text{ KSI}}$$

BRL

04037
B-3/10

18 JULY 1979 COLDWATER PIPE SUPPORTS 10/40

PLATE SIZING & X-SECTION CHECKS CONT'D

CHECK SHEAR AND BEARING OF BEARING BLOCK ASSEMBLY

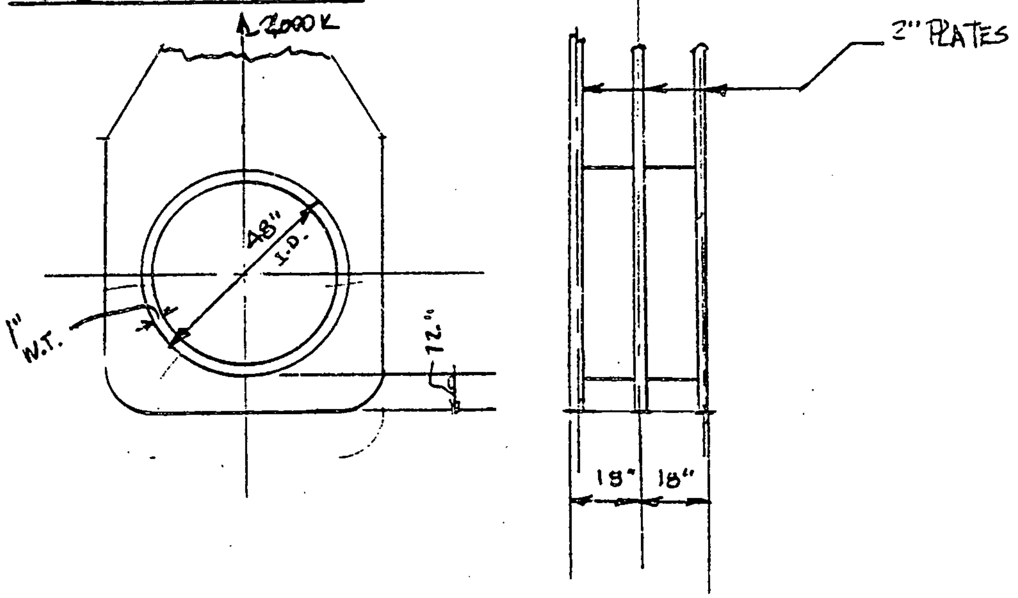

BEARING COSINE DISTRIBUTION

$$P_{MAX} = \frac{2P}{\pi(R)} = \frac{(2)(2000)}{(\pi)(24)} = \underline{53.05\ K/IN} \qquad \sigma_{AXIAL} = \frac{P_{MAX}}{W} = \frac{53.05}{6} = \underline{8.84\ KSI}$$

SHEARING AGAINST PLATES

$$\tau = \frac{V}{2A} = \frac{2000}{2(3)(2)(12)} = \underline{13.89\ KSI}$$

PLATE SIZING & X-SECTION CHECKS CONT'D

CHECK SHEAR OF PIPE AGAINST 2" PLATES

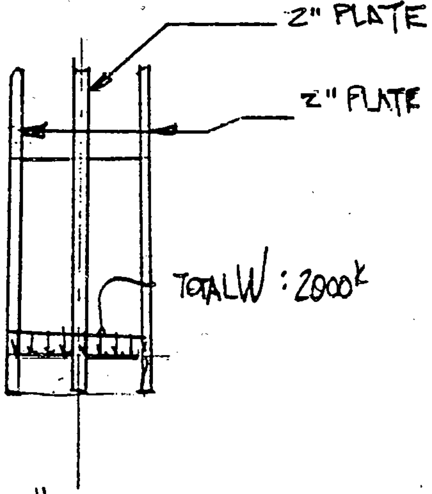

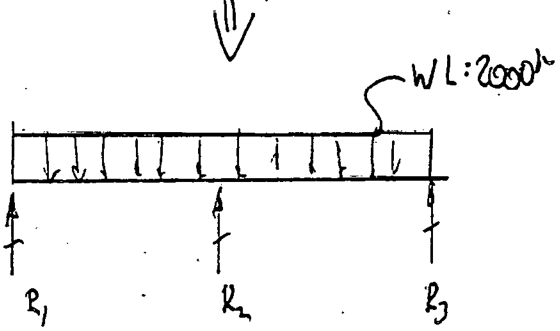

REF: AISC MANUAL PAGE 2-208, EXAMPLE 29

$R_1 : \frac{7}{16} W\frac{L}{2} - \frac{1}{16} W\frac{L}{2} = 375.00^k$

$R_2 : \left(\frac{5}{8} W\frac{L}{2}\right)(2) = 1250.00^k$ VMAX: $\underline{625^k}$

$R_3 : \left(\frac{7}{16}\right)\left(W\frac{L}{2}\right) - \left(\frac{1}{16}\right)\left(W\frac{L}{2}\right) = 375.00^k$

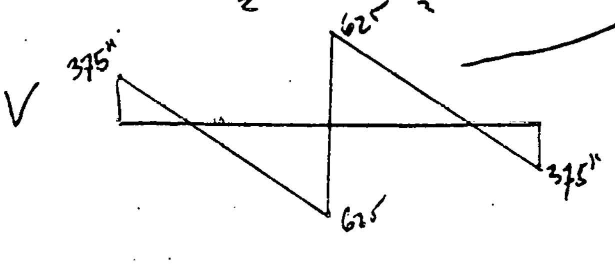

RRL

04087
B-10/10

18 JULY 1979 COLDWATER PIPE SUPPORTS 10/40

PLATE SIZING & X-SECTIONS CHECKS CONT'D

CHECK SHEAR OF PIPE AGAINST 2" PLATES

TRY PIPE W/ 48" I.D. & 1" W.T.

AREA: $\pi\left(\frac{D}{2}\right)^2 - \pi\left(\frac{d}{2}\right)^2 = \pi\left(\frac{50}{2}\right)^2 - \pi\left(\frac{48}{2}\right)^2 = \underline{153.94\ IN^2}$

SHEAR STRESS $\tau = \frac{V}{A} = \frac{625}{153.94/2} = \underline{8.12\ KSI}$

CHECK BEARING AT CENTER   COSINE DISTRIBUTION

$P_{MAX} = \frac{2P}{\pi R} = \frac{(2)(1250)}{\pi(24)} = 33.16\ k/IN$ $\tau_{BEAR} = \frac{33.16}{2} = \underline{16.58\ KSI}$

NOTE: LATERAL TORSIONAL STRESSES
HAVE NOT BE CONSIDERED IN
ANY OF THE ABOVE ANALYSIS

APPENDIX "C"

DESIGN OF SPIDER SUPPORT MEMBERS BY MATERIAL FOR COLDWATER PIPE

RRL

04097
C-1 /5

2AUG1979

COLDWATER PIPE SUPPORTS 10/40

GIVEN: LOADINGS FROM VARIOUS PIPE MATERIALS ON THE TRANSITION AND SPIDER JOINT

MATERIAL	AXIS OF ROTATION	MAX AXIAL LOAD	MIN AXIAL LOAD	MOMENT LOCATION
FRP	24°	3.64×10^6#	0.428×10^6#	61791.01 FT KIPS 80' BLEW TOP
ELAS (STEEL CABLES)	22.6°	5.4×10^6#	2.73×10^6#	— 0 —
ELAS (FABRIC)	23.0°	5.89×10^6#	2.31×10^6#	— 0 —
POLY.	16.5°	2.3×10^6#	2.2×10^6#	102,000 FT KIPS 280' BELOW TOP

PROBLEM: ESTIMATE A) BAR SUPPORT SIZE

B) TRANSITION SHELL THICKNESS — LIMITATION OF OF ROUNDNESS

C) FLANGE SIZE

AS A FUNCTION OF MATERIAL TO BE USED.

RRL

04087
C-2/5

2 AUG 1979 COLDWATER PIPE SUPPORTS 10/40

A) BAR SIZING

TOP BARS :

FRP : $A : \frac{P}{T} : \frac{3640^{k}}{21.6} = 168.52 \text{ IN}^2$

$\frac{\pi}{4} D^2 = A : \sqrt{\frac{(A)(4)}{\pi}} = D : D = \sqrt{\frac{(168.52)(4)}{\pi}}$ 14.65 IN

TOP BARS 15"Ø

ELAS: $A : \frac{P}{T} : \frac{5890}{21.6} = 272.69 \text{ IN}^2$

$D : \sqrt{\frac{(A)(4)}{\pi}} : \sqrt{\frac{(272.69)(4)}{\pi}} =$ 18.63 IN

TOP BARS 19"Ø

POLY : $A : P/T : \frac{2300}{21.6} = 106.48 \text{ IN}^2$

$D : \sqrt{\frac{(A)(4)}{\pi}} : \sqrt{\frac{(106.48)(4)}{\pi}} =$ 11.64 IN

TOP BARS 12"Ø

RRL

04087

C-3/5

2 AUG 1979 COLDWATER PIPE SUPPORTS 1/40

A) BAR SIZING CONT'D

BOTTOM BARS :

P : BAR FORCE : $\sqrt{\left(\frac{P}{4}\right)^2 + \left(\frac{P}{4}\ \mathrm{TAN}\ 25°\right)^2}$

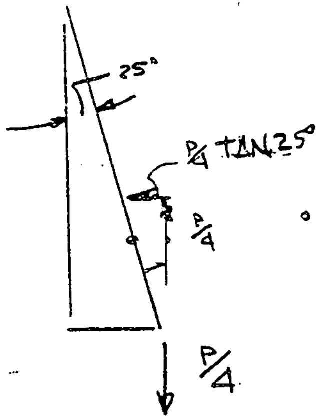

FRP :

$$P: \sqrt{\left(\frac{3640}{4}\right)^2 + \left(\frac{3640}{4}\ \mathrm{TAN}\ 25°\right)^2} = \underline{1004.07\ \mathrm{KIPS}}$$

$$A: P/4 : \frac{1004.07}{21.6} = \underline{46.48\ \mathrm{IN}^2}$$

$$D: \sqrt{\frac{A(4)}{(\pi)}} : \sqrt{\frac{(46.48)(4)}{\pi}} = \underline{7.69\ \mathrm{IN}}$$

BOTTOM BARS : $\underline{8\ \mathrm{IN}}$

RRL

04087

C-4/5

2 AUG 1979 COLDWATER PIPE SUPPORTS 10/40

A) BAR SIZING CONT'D

ELAS:

$$P: \sqrt{\left(\frac{5890}{4}\right)^2+\left(\frac{5890}{4}\tan 25^\circ\right)^2} = 1624.72 \text{ KIPS}$$

$$A: \frac{P}{\sigma} : \frac{1629.7}{21.6} = 75.22 \text{ IN}^2$$

$$D: \sqrt{\frac{(A)(4)}{\pi}} : \sqrt{\frac{(75.22)(4)}{\pi}} = 9.79 \text{ IN}$$

BOTTOM BARS 10 IN Ø

POLY:

$$P: \sqrt{\left(\frac{2300}{4}\right)^2+\left(\frac{2300}{4}\tan 25^\circ\right)^2} = 634.44 \text{ KIPS}$$

$$A: \frac{P}{\sigma} : \frac{634.44}{21.6} = 29.37 \text{ IN}^2$$

$$D: \sqrt{\frac{(A)(4)}{\pi}} : \sqrt{\frac{(29.37)(4)}{\pi}} = 6.12 \text{ IN}$$

BOTTOM BARS 6.5 IN DIA

RRL

04097
C.5/5

2 AUG 1979 COLDWATER PIPE SUPPORTS 10/40

TABLE OF BAR SIZES

MATERIAL	TOP BAR DIA	BOTTOM BAR DIA.
FRP	15"	8"
ELAS	19"	10"
POLY	12"	6.5"

APPENDIX "D"

DESIGN OF TRANSITION SECTIONS OF PIPE BY WORST LOADING ON THE SECTION

RRL

04097 D-1/16

16 JULY 1979 COLDWATER PIPE SUPPORTS 10/40

GIVEN: COLDWATER PIPE TRANSITION AS SHOWN BELOW. AND DESIGN LOADINGS AS FOLLOWS

POLYETHYLENE:

$M_{280 \text{ BELOW JOINT}}$ = 102,000 FT KIPS

P_{AXIAL} = 2,200 KIPS

FRP:

$\sigma_{80 FT \text{ BELOW JOINT}}$ = 5.0 KSI

P_{AXIAL} = 3,500 KIPS

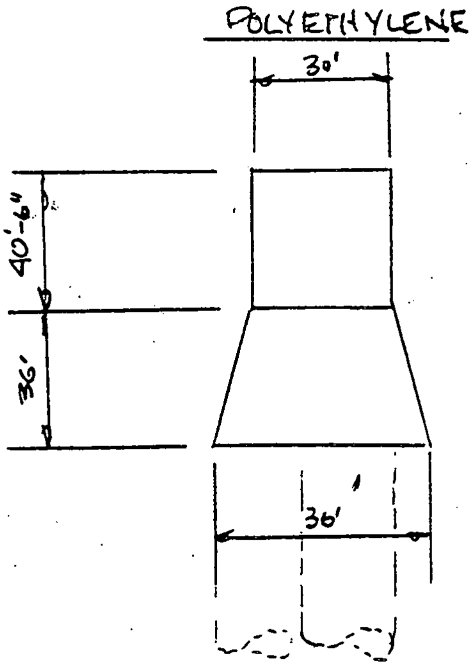

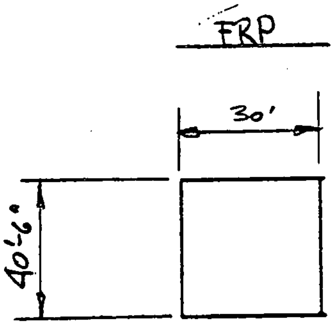

PROBLEM: DETERMINE ALLOWABLE WALL THICKNESSES FOR THE TRANSITION PIPE.

RRL

C4027
'D'-2/16

16 JULY 1979 COLDWATER PIPE SUPPORT 10/40

SECTION PROPERTIES OF FRP

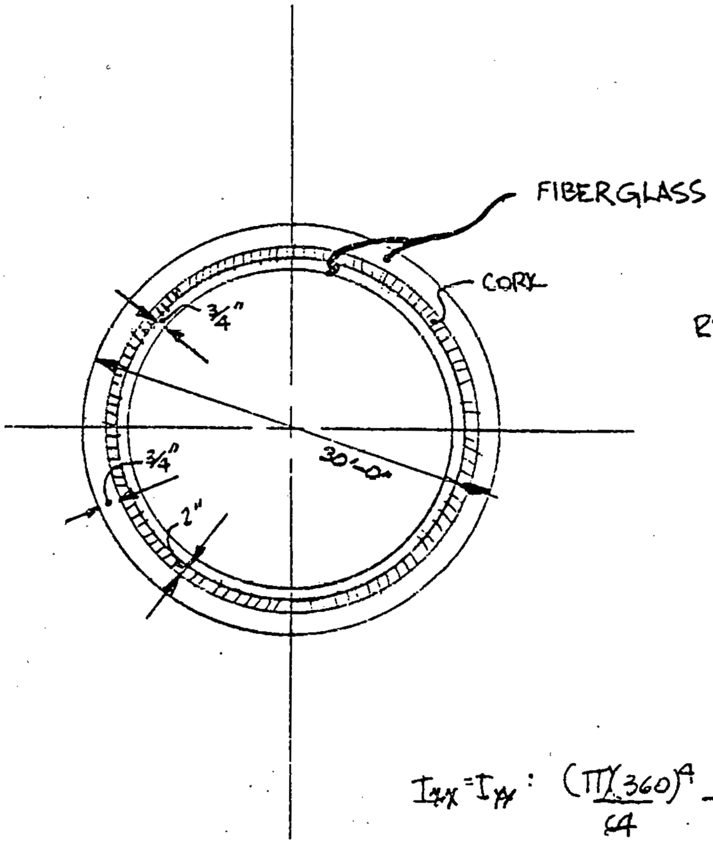

REF. J. SCHAAF

$I_{xx} = I_{yy} : \frac{(\pi)(360)^4}{64} - \frac{(\pi)(358.5)^4}{64} + \frac{(\pi)(354.5)^4}{64} - \frac{(\pi)(353)^4}{64}$

$I_{xx} = I_{yy} : \underline{26,693,716.40 \text{ IN}^4} \therefore S_{xy} : I/R : \frac{26,693,716.4}{180} = \underline{148,298.42 \text{ IN}^3}$

AREA: $\frac{\pi(360)^2}{4} - \frac{(\pi)(358.5)^2}{4} + \frac{\pi(354.5)^2}{4} - \frac{\pi(353)^2}{4} = 1679.97 \text{ IN}^2$

RRL

04097
D-3/16

16 JULY 1979 COLDWATER PIPE SUPPORT 10/46

DETERMINE MOMENT FROM STRESS ON FRP

$$\sigma = M/S \quad : \quad (\sigma)(S) = M \quad : \quad \frac{(5)(148,298.42)}{12} = \underline{61,791.01 \text{ FT KIPS}}$$

THE MOMENT GOES FROM 61,791.01 FT KIPS 80 FT BELOW THE UNIVERSAL JOINT TO 0.0 FT KIPS AT THE UNIVERSAL JOINT.

MOMENT DIAGRAM

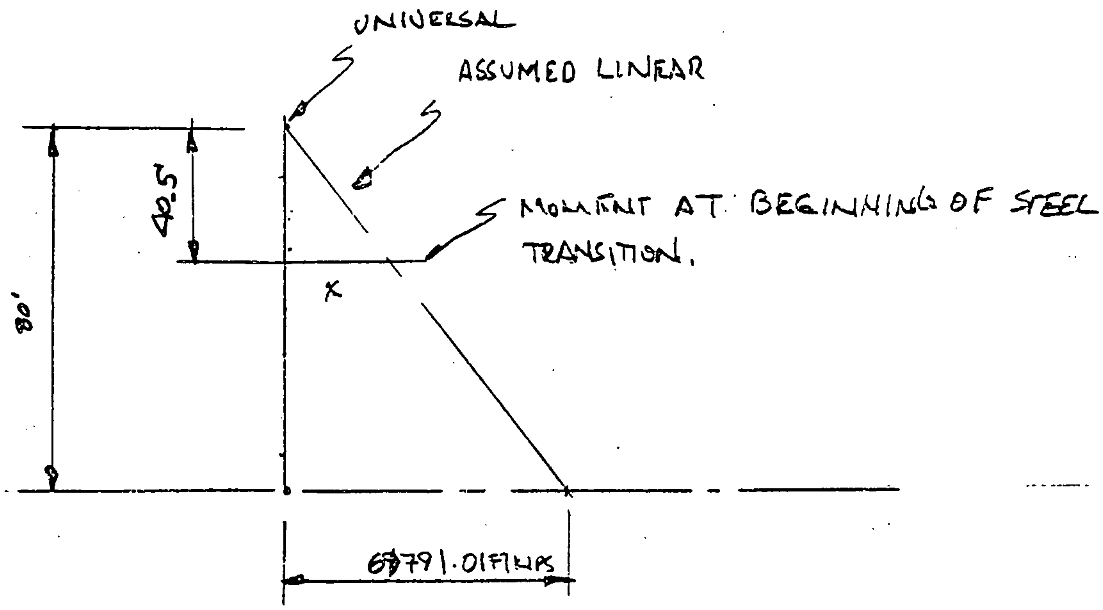

$$x/30 = \frac{69791.01}{80} \quad ; \quad x = (40.5)\left(\frac{61791.01}{80}\right) = \underline{31,281.70 \text{ FT KIPS}}$$

RLL 04036

D-4/16

16 JULY 1979 COLDWATER PIPE SUPPORT 10/40

TRANSITION WALL 1" THICK

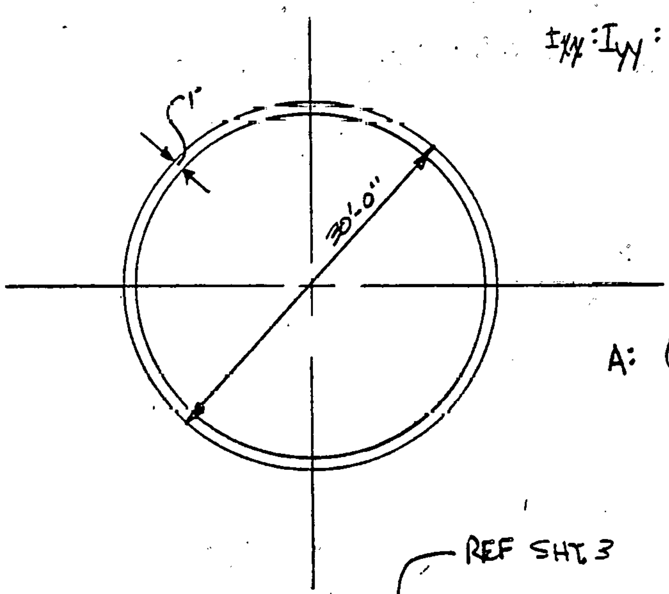

$I_{xx} : I_{yy} : \frac{(\pi)(360)^4}{64} - \frac{(\pi)(359)^4}{64} = \underline{1816965 1.60} \text{ IN}^4$

$S_{xx} : S_{yy} : I/R = \frac{18,169,151.6}{180} = \underline{100,942.51 \text{ IN}^3}$

$A : \frac{(\pi)(360)^2}{4} - \frac{(\pi)(358)^2}{4} = \underline{1127.83 \text{ IN}^3}$

REF SHT. 3

$\text{BENDING} \rightarrow \sigma : M/S : \frac{(31,291.70)(12)}{100,942.51} = -\underline{3.72 \text{ KSI}}$

REF SHT. 1

$\text{AXIAL} \rightarrow \sigma : P/A : \frac{3500}{1127.83} = \underline{3.10}$

$\sigma_{TOT} : \sigma_{AXIAL} + \sigma_{BENDING} : 3.72 + 3.10 = \underline{6.82 \text{ KSI}}$

FROM THIS IT CAN BE SEEN THE PIPE IS ALWAYS IN TENSION

TRANSITION SECTION WALL 1" THICK

CHECK RING STIFFENERS DUE TO THE BARS FRAMING INTO THE COLDWATER PIPE WALLS

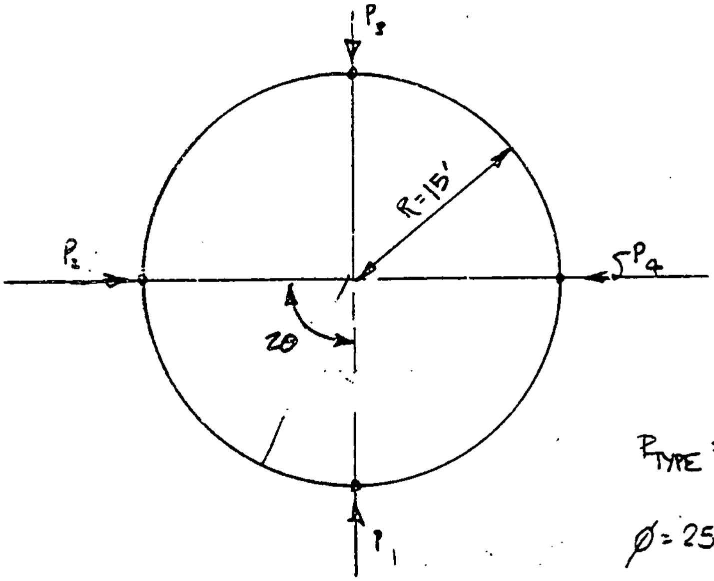

P_{TYPE} : 1000 SIN ϕ

$\phi = 25°$

P_{TYPE} : (1000)(SIN 25°) = 422.62 KIPS

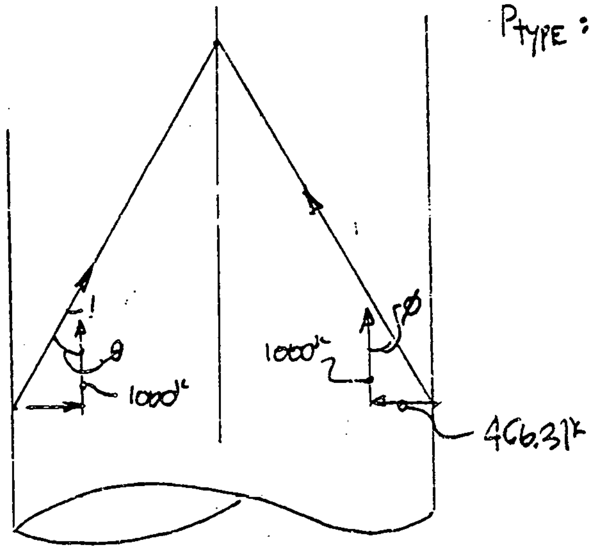

ERL

04087

D-6/16

26 JULY 1979

COLDWATER PIPE SUPPORT 10/40

TRANSITION SECTION WALL 1 IN. THICK

MOMENTS IN RING:

REF: FORMULAS FOR STRESS & STRAIN 4th EDITION
TABLE VIII PAGE 174 LOADING AND SUPPORT CASE No. 9

$x=0,\ x=\theta$

$$M = \tfrac{1}{2} PR\left(\frac{\cos x}{\sin\theta} - \frac{1}{\theta}\right)$$

$$M = (\tfrac{1}{2})(466.31)(15)(12)\left(\frac{\cos 45^\circ}{\sin 45^\circ} - \frac{1}{\underbrace{45^\circ}_{0.79R}}\right) = -11{,}467.29 \text{ "KIPS}$$

$x=0;\ 2\theta;\ 4\theta$

$$+M_{MAX} : \tfrac{1}{2} PR\left(\frac{1}{\sin\theta} - \frac{1}{\theta}\right)$$

$$+M_{MAX} : (\tfrac{1}{2})(466.31)(15)(12)\left(\frac{1}{\sin 45^\circ} - \frac{1}{\underbrace{45^\circ}_{0.79R}}\right) = +\ 5{,}916.38 \text{ "KIPS}$$

$$-M_{MAX} : -(\tfrac{1}{2})PR\left(\frac{1}{\theta} - \cot\theta\right)$$

$$-M_{MAX} : -(\tfrac{1}{2})(466.31)(15)(12)\left(\frac{1}{\underbrace{45^\circ}_{0.79R}} - \cot 45^\circ\right) = -11{,}467.29 \text{ "KIPS}$$

MAX MOMENT @ POINT OF LOAD APPLICATION 11,467.29 "KIPS

$$S_{REQ} = \frac{M}{\sigma} = \frac{11{,}467.22}{21.6} = 530.89 \text{ IN}^3$$

- WF 36 X 280 $S_{xx} = 1030 \text{ IN}^3$ ←

THERE MAY BE TORSION AT THIS POINT, SO, A CLOSED SECTION MAY BE NEEDED.

RRL

0408?
D-7/16

7 AUG 1979 COLDWATER PIPE SUPPORT 10/40

TRANSITION SECTION W/ 1 IN. WALL THICKNESS

$S_{REQ'D}$ 962.30 IN³

ALL STIFFENED ELEMENTS

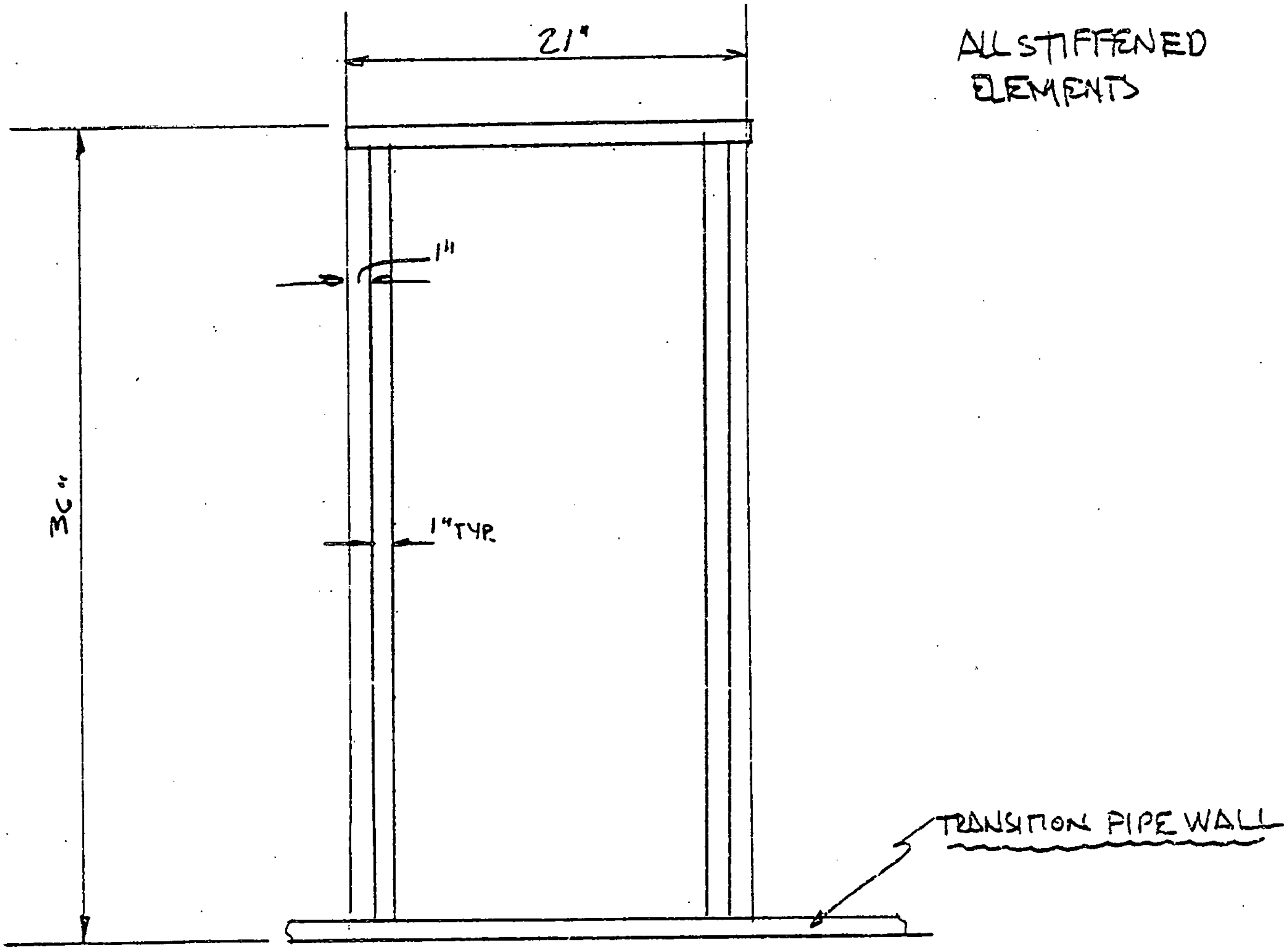

$$S_{44} : \frac{\frac{b_1 h_1^3}{12} - \frac{b_2 h_2^3}{12}}{h/2} : \frac{\frac{(21)(36)^3}{12} - \frac{(19)(34)^3}{12}}{18} = \underline{1078.70} \text{ IN}^3$$

REF AISC 7TH EDITION PAGE 5-26
SECTION 1.9.2.2

$$b/t \leq 238/\sqrt{F_y} \quad \frac{36}{20} \leq 238/6 = \quad \underline{36 \leq 39.67}$$

O.K.

RRL

04037
D7A /16

17 AUG. 1979 COLDWATER PIPE SUPPORT 10/40

CHECK TORSION FROM SPIDERS ON THE LOWER RING
(LOCAL STRESS LOADING)

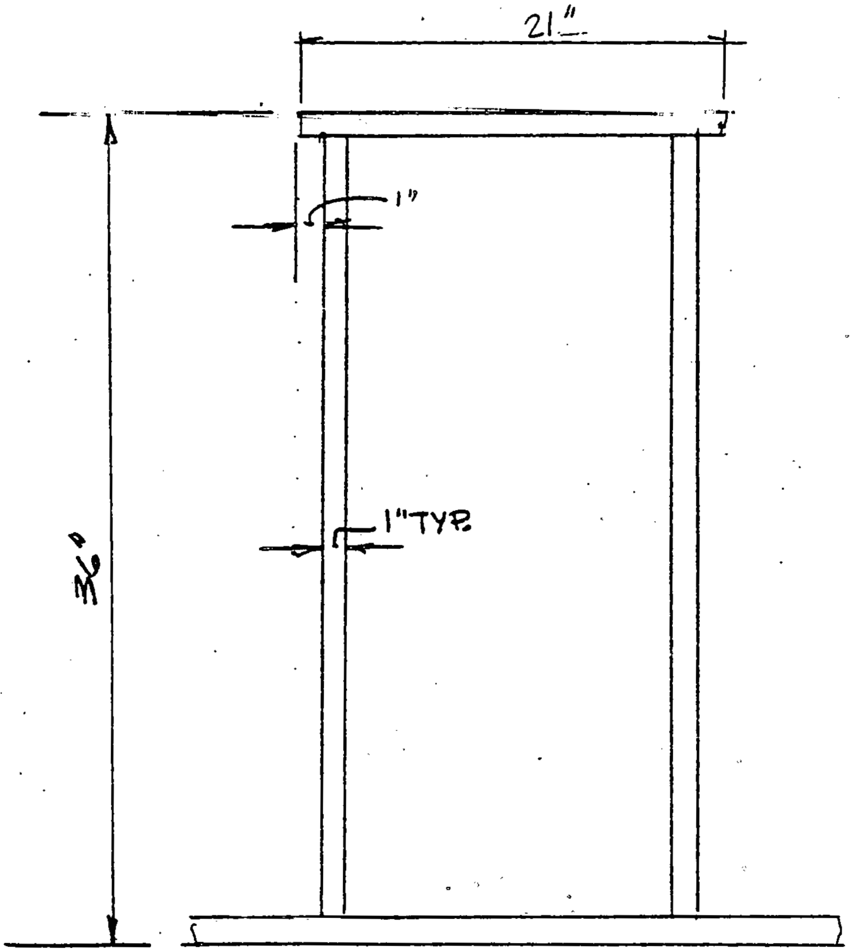

TORSIONAL CHECK DUE TO TRANSMISSION OF AXIAL LOADS BELOW CONNECTION INTO LOWER SPIDER BARS. LOAD PATH RADIALLY AROUND CYLINDER INTO 4 SPIDER BARS PUTS THE LOWER RING STIFFNER IN TORSION

REF: DESIGN OF WELDED STRUCTURES
SECTION 2.10-4 TABLE 2

R:

$$\frac{Tt}{R} = \tau = \frac{T}{2[A](t)} \therefore R = 2[A]\,t^2 : 2[35\times185][1.0]^2 = \underbrace{12950}\,IN^4$$

RRL

04037

D73/16

17 AUG 1979 COLDWATER PIPE SUPPORT 10/40

CHECK TORSIONAL STRESS

$\tan 25^\circ = \frac{R}{1000} \therefore$

$P = \sqrt{\tan 25^\circ (1000)^2 + (1000)^2} = \underline{1103.38 \text{ kips}}$

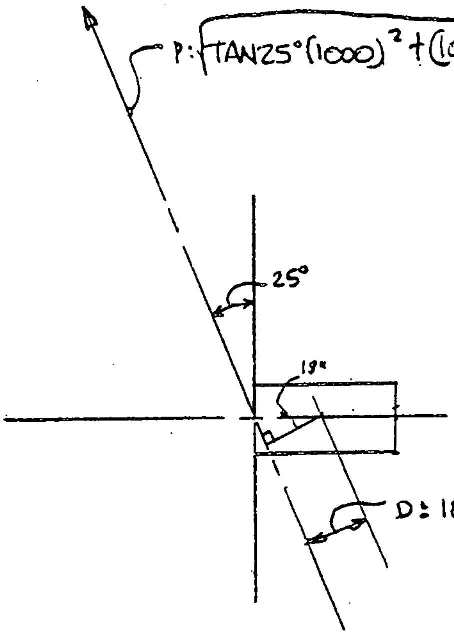

$\cos 25^\circ = \frac{D}{18"}$

$D = 18 \cos 25^\circ = \underline{16.31"}$

$M_{TORSION} = (1103.38)(16.31) = \underline{17,996.09 \text{ "KIPS}}$

$\tau = \frac{(T)(t)}{R} = \frac{17996.09}{1295} = \underline{13.90 \text{ ksi}}$

CHANGE PLATE THICKNESS TO 1¼" PLATE

RRL

04037

D-8/16

26 JULY 1979 COLDWATER PIPE SUPPORT 10/40

TRANSITION SECTION WALL 1" THICK

BUCKLING DUE TO MOMENT WILL NOT OCCUR IF THE AXIAL TENSION FOR KEEPS THE ENTIRE SECTION IN TENSION.

CHECK HOOP BUCKLING STRESS

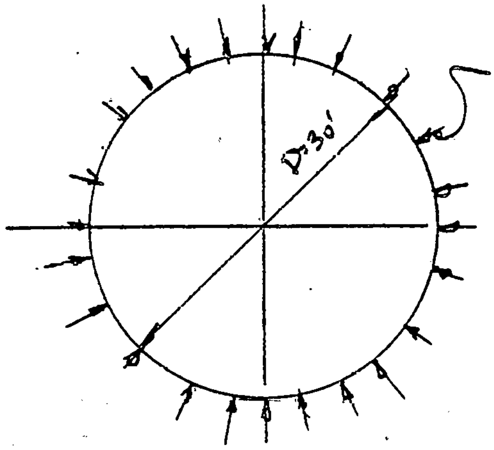

3PSI = PRESSURE ACTUAL

BECAUSE OF GLOBE ON ONE END AND RING ON OTHER SUPPORTS ASSUMED FIXED

REF: STANDARD HANDBOOK FOR MECHANICAL ENGINEERS PAGE 5-65 FIG. 64 & 66

$$\frac{D}{t} \div \frac{360}{1} = 360 \approx 500 \qquad \frac{L}{R} : \frac{40.5'}{15} =$$

$$W_c = KE\left(\frac{t}{D}\right)^3 \text{ PSI}$$

REF GRAPH 64 $D/t = 200$ $L/R \approx 1.35$

$K = 70$

$$W_c : (70)(30{,}000{,}000)\left(\frac{1}{360}\right)^3 = \underline{45.01 \text{ PSI}}$$

ERL

04097
D-9/16

26 JULY 1979 COLDWATER PIPE SUPPORT 10/40

TRANSITION SECTION W/ 1 IN. WALL THICKNESS

REF: PRINCIPLES OF NAVAL ARCHITECTURE
PAGE 210
EQ 21b

YIELDING AT MID BAY

$$\theta = \frac{1.285 L}{(Rt)^{1/2}} \qquad N = \frac{\cosh\theta - \cos\theta}{\sinh\theta - \sin\theta}$$

$$\beta = \frac{1.555 N (Rt^3)^{1/2}}{\underset{\hookrightarrow \text{ FRAME AREA}}{A + bt}} \qquad B = \frac{bt}{\underset{\hookrightarrow \text{ thickness OF RING}}{A + bt}}$$

$$H = -\frac{3.089 \sinh \theta/2 \cos \theta/2 + 0.917 \cosh \theta/2 \sin \theta/2}{\sinh\theta + \sin\theta}$$

$$P_{py} = \frac{\dfrac{2\sigma_y t}{D}}{1 + H\left(\dfrac{0.85 - B}{1 + \beta}\right)}$$

R (INCH) = (15)(12) = 180 IN.
L (INCH) = (40.5)(12) = 485 IN.

$$\theta : \frac{(1.285)(485)}{(180)(1)^{1/2}} = \underline{46.09} \text{ RAD.}$$

$$N : \frac{\cosh 46 - \cos 46}{\sinh 46 - \sin 46} = \frac{343,469}{343,469} = 1.0$$

$$H : \frac{3.089 \sinh 6.72 \cos 6.72 + 0.917 \cosh 6.72 \sin 6.72}{\sinh 6.72 + \sin 6.72}$$

26 JULY 1979 COLDWATER PIPE SUPPORT 10/40

TRANSITION SECTION W/ 1 IN. WALL THICKNESS CONT'D

$$H: \frac{1159.91 + 160.77}{414.83} = 3.18$$

$$\beta : \frac{1.555(1)\left[(130)(1)^3\right]^{1/2}}{82.4 + (1.57)(1)} = 0.25$$

$$B: \frac{(1.57)(1)}{82.4 + (1.57)(1)} = 0.0090$$

$$P_{PY} : \frac{\frac{2(36000)(1)}{360}}{1 + 3.18\left[\frac{0.85 - 0.0090}{1 + 0.25}\right]} = \underline{63.70 \text{ PSI}} \leftarrow$$

RRL

04087
D-11/16

26 JULY 1979 COLDWATER PIPE SUPPORT 10/40

TRANSITION SECTION W/ 1IN WALL THICKNESS

$$P_{YP} = \frac{\left[\frac{\sigma_{Y.P.}}{R/t} + \left(1+6\frac{\mu_0}{t}\right)P_{CR} - \sqrt{\left(\frac{\sigma_{YP}}{R/t} + \left(1+6\frac{\mu_0}{t}\right)P_{CR}\right)^2 - \frac{\sigma_{YP}\,P_{CR}\,(4)}{R/t}}\right.}{2}$$

μ_0 = DEVIATION OF RADIUS. THE RADIUS MAY DEVIATE NO MORE THAN 2" MAX.

$$P_{YP} = \frac{\left[\frac{36{,}000}{180} + (1+(6)(2))(45.01) - \sqrt{\left[\frac{36000}{180} + (1+(6)(2))(45.01)\right]^2 - \frac{(36000)(45.01)(4)}{180}}\right.}{2}$$

$P_{Y.P.}$ = 11.64 PSI ← CONSERVATIVE

DETERMINE $\frac{F_{ULT}}{F}$

REF: COLD-FORMED COMMENTARY
PAGE 11-28 FIG C.11

$$\frac{E}{F_y} \cdot \frac{t}{D} \therefore \left(\frac{29000}{36}\right)\left(\frac{1}{360}\right) = 2.24$$

$$\frac{F_{ULT}}{F_y} = 0.75 \quad \therefore \quad F_{ULT} = (F_y)(0.75)$$

$$F_{ULT} = (36{,}000)(0.75) = 27000 \text{ PSI}$$

$$\frac{P}{P_{YP}} + \frac{F}{F_{ULT}} \le \frac{1}{S.F.} \quad \therefore \quad \frac{3.00}{11.64} + \frac{3.720}{27000} \le \frac{1}{1.5}$$

$$0.40 \le 0.67$$

RRL C4037 D-12/6

16 JULY 1979 COLDWATER PIPE SUPPORTS 10/40

POLYETHYLENE PIPE TRANSITION

TRANSITION FROM 7 - 12'-0" Ø POLY PIPE TO 1 - 30'-0" Ø PIPE

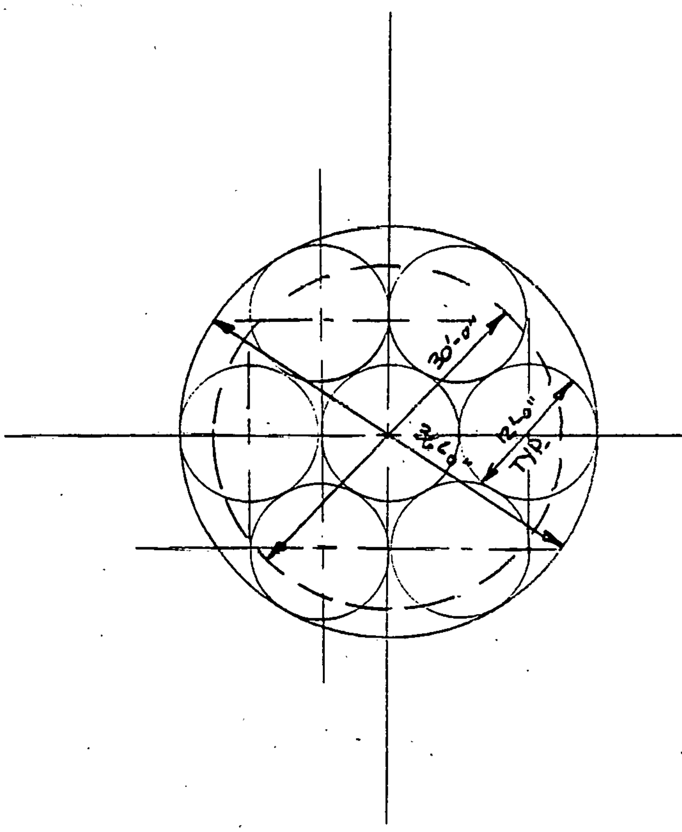

PLAN TRANSITION

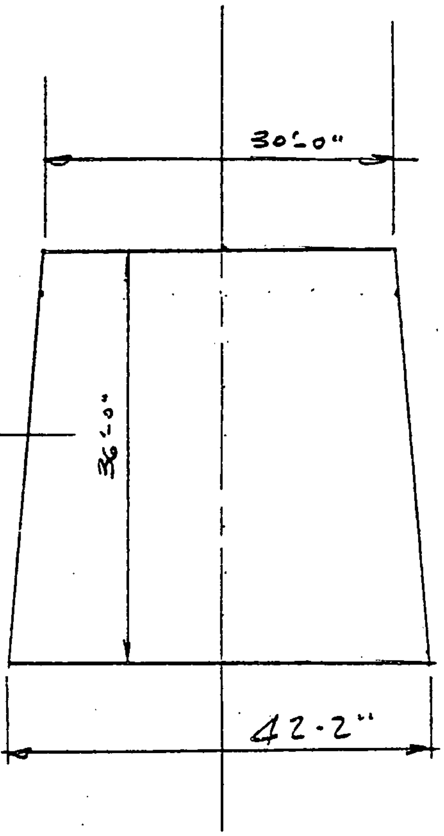

ELEVATION TRANSITION

TOP TRANSITION PIECE SAME PROPERTIES AS FRP

RRL

04037

D-13/16

6 JULY 1979

COLDWATER PIPE SUPPORTS 10/40

MOMENT ON FLARED TRANSITION SECTION

THE MOMENT GOES FROM 102,000 FT KIPS 280 FT BELOW THE UNIVERSAL TO 0.0 FT KIPS AT THE UNIVERSAL.

MOMENT DIAGRAM:

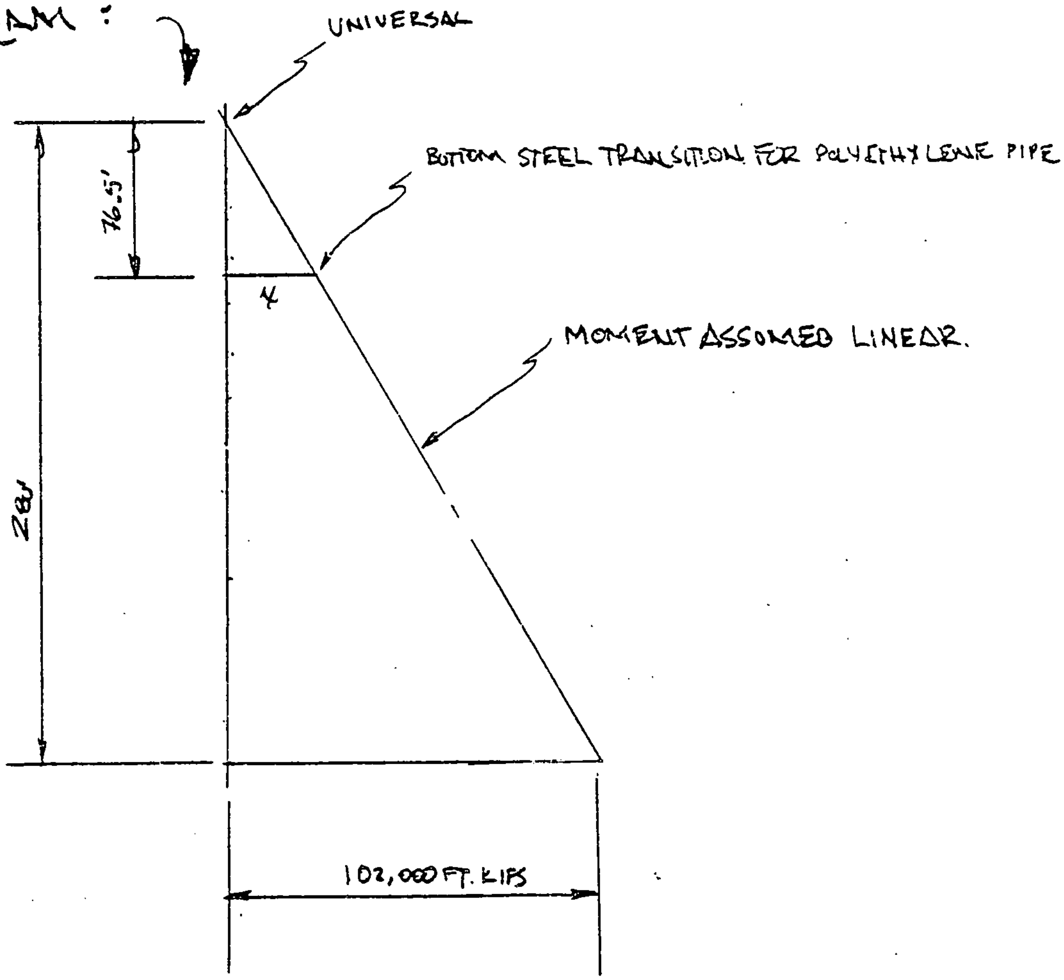

$$\frac{102{,}000}{280} = \frac{x}{66} \therefore x \cdot (76.5)\left(\frac{102{,}000}{280}\right) = \underline{\underline{27\ 867.86 \text{ FTKIPS}}}$$

RRL

04037
D-14/16

16 JULY 1979   COLDWATER PIPE SUPPORTS 10/40

PROPERTIES OF TRANSITION SECTION

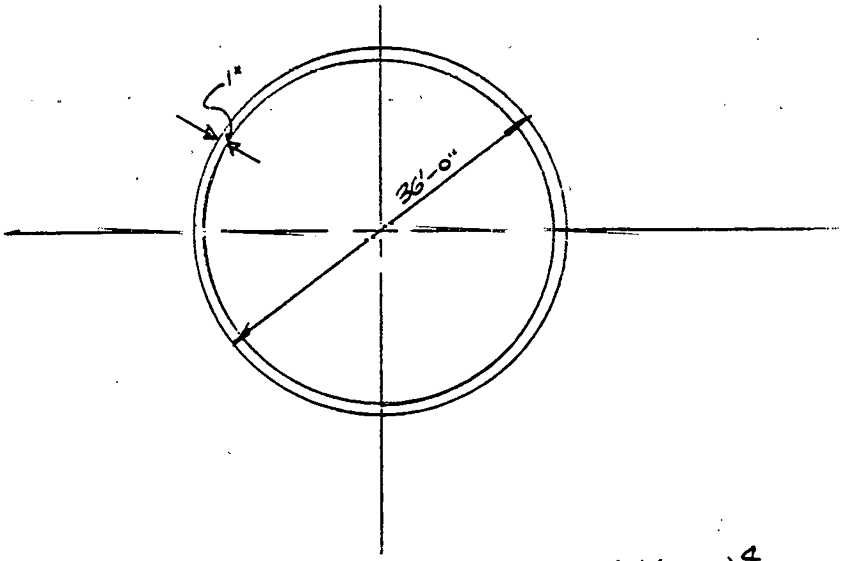

$$I_{xx} : I_{yy} : \frac{(\pi)(432)^4}{64} - \frac{(\pi)(430)^4}{64} = \underline{31{,}440819.00 \text{ IN}^4}$$

$$S_{xx} : S_{yy} : I/R : \frac{31{,}449{,}819}{216} = \underline{145{,}559.35 \text{ IN}^3}$$

$$A : \frac{(\pi)(432)^2}{4} - \frac{(\pi)(430)^2}{4} = \underline{1354.03 \text{ IN}^2}$$

$$\sigma_{\text{BENDING}} : M/S : \frac{(27867.86)(12)}{145{,}559.35} = \underline{2.30 \text{ ksi}}$$

REF PAGE 1

$$\sigma_{\text{AXIAL}} : P/A : \frac{2{,}200}{1354.03} = \underline{1.62 \text{ ksi}}$$

$$\sigma_{\text{TOTAL}} : \sigma_{\text{BENDING}} + \sigma_{\text{AXIAL}} : 2.30 + 1.62 = \underline{3.92 \text{ ksi}}$$

RRL

04097

D-15/16

27 JULY 1979 COLDWATER PIPE SUPPORTS 10/40

POLYETHYLENE PIPE TRANSITION SECTION

REF: STANDARD HANDBOOK FOR MECHANICAL ENGINEERS PAGE 5-65 FIG 64 (ASSUMED FIXED BOTH ENDS)

$D_{AVG}: \frac{30+42}{2} = 36'$

$$\frac{D}{t} = \frac{432}{1.0} = 432 \approx 500 \therefore k = 125$$

$$\frac{L}{R} = \frac{30}{18} = 1.67$$

$$W_c = (125)(29{,}000{,}000)\left(\frac{1.0}{216}\right)^3$$

$$W_c = 359.71 \text{ PSI}$$

REF: BUCKLING OF BARS, PLATES AND SHELLS PAGE 193 EQ. 162

THE RADIUS MAY NOT BE OUT OF ROUND OVER 2"

u_0 OUT OF ROUNDNESS

$$P_{yp} = \frac{\left[\frac{\sigma_{yp}}{R/t} + \left(1+6\frac{u_0}{t}\right)P_{CR}\right] - \sqrt{\left(\frac{\sigma_{yp}}{R/t} + \left(1+6\frac{u_0}{t}\right)P_{CR}\right)^2 - \left(\frac{\sigma_{yp}P_{CR}}{R/t}\right)(4)}}{2}$$

$$P_{yp} : \frac{\left[\frac{36000}{216/1.0} + \left(1+6\left(\frac{2}{1.0}\right)\right)359.71\right] - \sqrt{\left(\frac{36000}{216/1.0} + \left(1+6\left(\frac{2}{1.0}\right)\right)359.71\right)^2 - \left(\frac{(36000)(35271)(4)}{216/1.0}\right)}}{2.0}$$

P_{yp}: 12.41 PSI ← CONSERVATIVE

RRL

04087
D-16/16

27 JULY 1979 COLDWATER PIPE SUPPORTS 10/40

POLYETHYLENE PIPE TRANSITION SECTION CONT'D

DETERMINE CRITICAL MOMENT FACTORS

REF: COLD-FORMED COMMENTARY
PAGE 11-28 FIG. C-11

$$\frac{E}{F_y} \cdot \frac{t}{D} : \frac{29{,}000{,}000}{36000} \cdot \frac{1.0}{432} = 1.86$$

$$\frac{F_{ULT}}{F_y} = 0.49 : F_{ULT} : (0.49)(36{,}000) = \underline{17640.00 \text{ PSI}}$$

$$P/P_{PY} + M/M_{PY} \leq \frac{1}{S.F.} ; \frac{3.0}{12.41} + \frac{2300}{17640} \leq \frac{1}{1.5}$$

$$\underline{0.37 \leq 0.67}$$

NO CHECK WAS MADE OF THE TOP SPHERE.

APPENDIX "E"

FLANGE DESIGN BY MATERIAL
FOR COLD WATER PIPE

KKL

0497

E-A/12

7 AUG 1979 . COLDWATER PIPE SUPPORTS 10/40

GIVEN: LOADINGS FROM VARIOUS PIPE MATERIALS ON THE TRANSITION AND SPIDER JOINT

MATERIAL	AXIS OF ROTATION	MAX AXIAL LOAD	MIN AXIAL LOAD	MOMENT LOCATION
FRP	24°	3.64×10^6 #	0.428×10^6 #	61791.01 FT KIPS 85' BELOW TOP
ELAS (STEEL CABLES)	22.6°	5.4×10^6 #	2.73×10^6 #	— 0 —
ELAS (FABRIC)	23.0°	5.89×10^6 #	2.31×10^6 #	— 0 —
POLY	16.5°	2.3×10^6 #	2.2×10^6 #	102,000 FT KIPS 250' BELOW TOP

PROBLEM: ESTIMATE A) BAR SUPPORT SIZE

B) TRANSITION SHELL THICKNESS — LIMITATION OF OF ROUNDNESS

C) FLANGE SIZE

AS A FUNCTION OF MATERIAL TO BE USED.

RRL

04097
E-B /12

17 AUG. 1979

COLD WATER PIPE SUPPORTS 10/20

TYPICAL BOLT AND FLANGE LOCATIONS

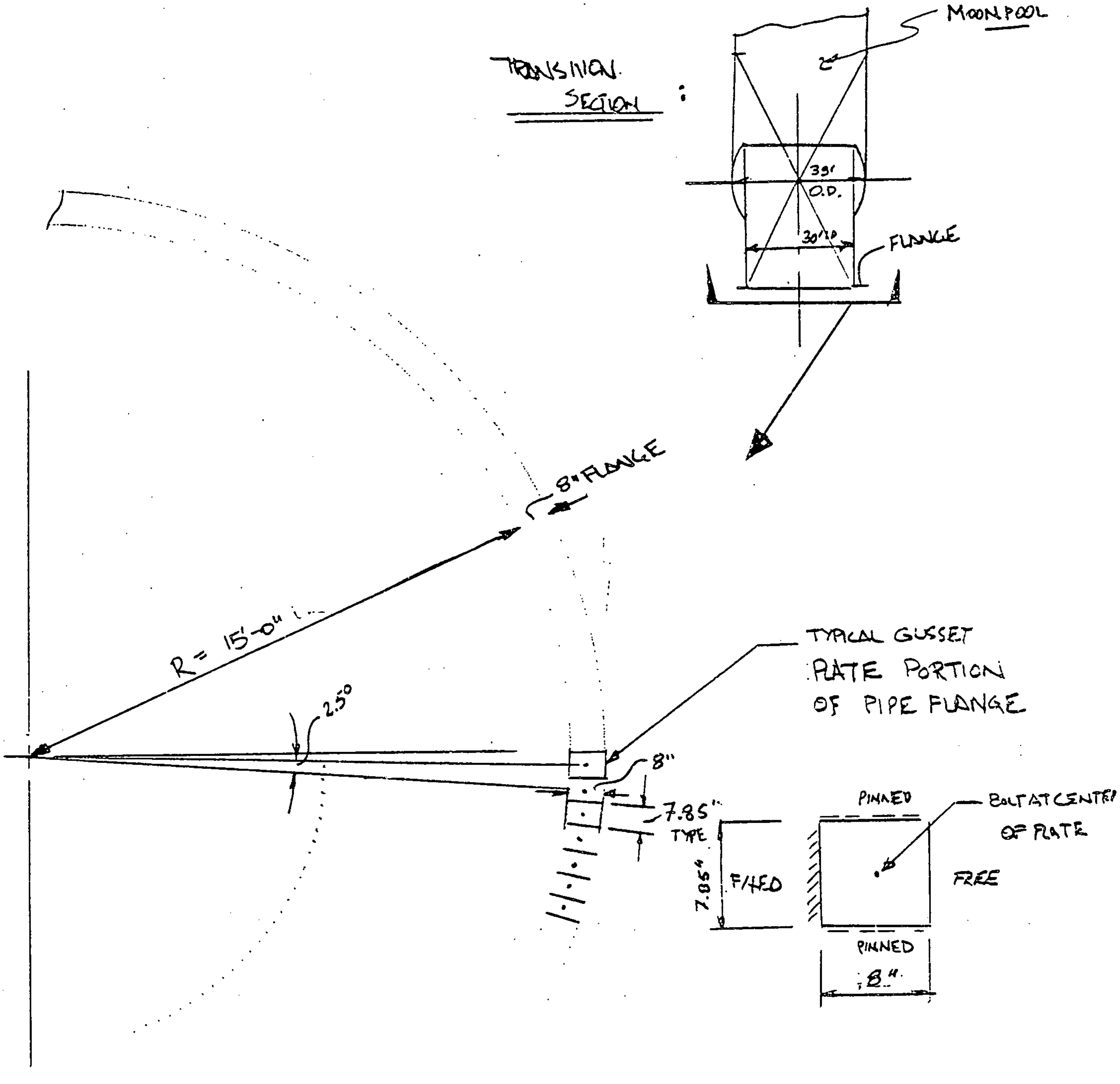

2 AUG. 1979 COLDWATER PIPE SUPPORT 10/40

C) FLANGE SIZE

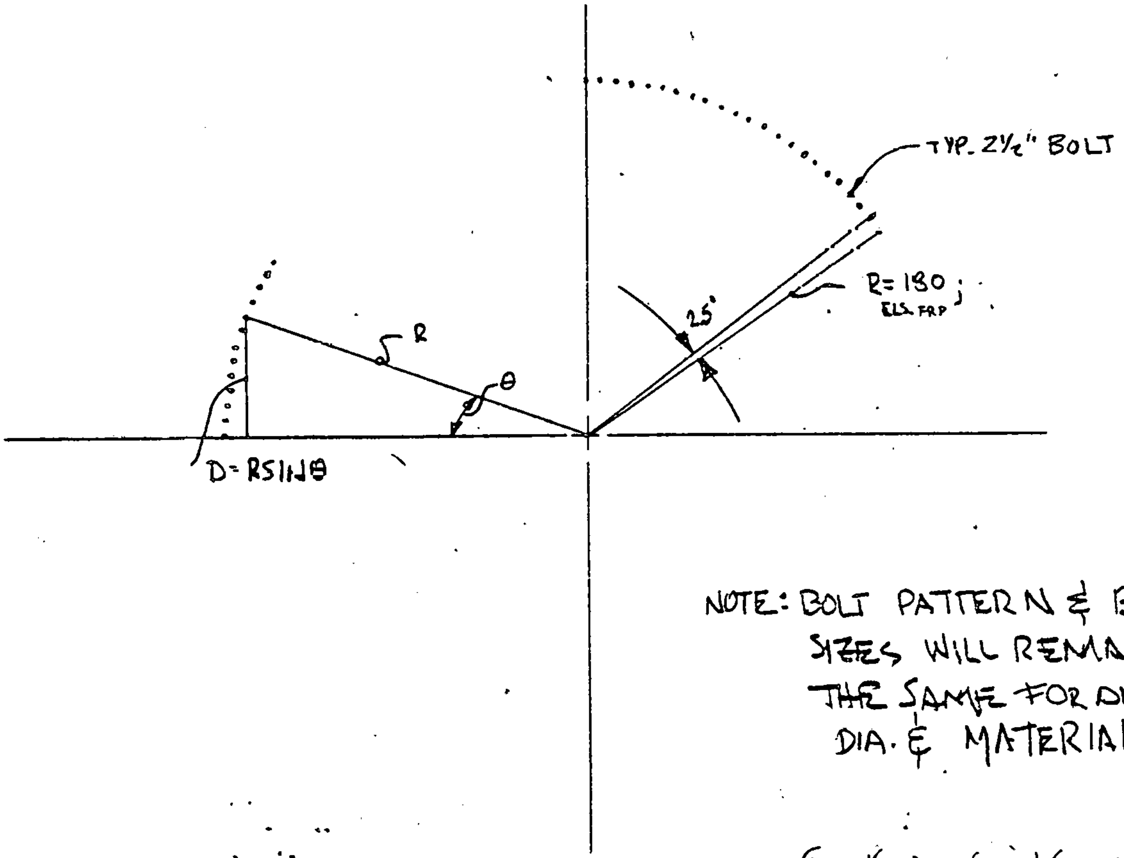

NOTE: BOLT PATTERN & BOLT SIZES WILL REMAIN THE SAME FOR ALL DIA. & MATERIALS

AREA: (144)(A) = (144)(3.716) = 535.10 IN²

$$I_{xx} = \overset{3.716\,IN^2}{A}\,\overset{(180)^2}{R^2} \sum_{\theta = 0 \to 360}^{25} \sin^2\theta$$

$\sum \sin^2\theta = 72.00$

$I_{xx} = (3.716)(180)^2(78.00) =$ 8,668,000 IN⁴

$S_{xx} = \frac{I}{R} = \frac{939,075.2}{180} =$ 47966 IN³ ← ELAS & FRP

C) FLANGE SIZE CONT'D

$$I_{xx} = AR^2 \sum_{\substack{\theta=0\to 360\\ 25}} \sin^2\theta$$

$$\sum' \sin^2\theta = 78.0$$

$$I_{xx} : (3.716)(246)^2(78.0) = \underline{17540441.56\ IN^4}$$

$$S_{xx} : I/R : \frac{17540441.56}{246} = \underline{71302.61\ IN^3}$$

1) ELASTOMER :

AXIAL LOADING : 5890 KIPS
PRESSURE : 3 PSI

$$\sigma_{AXIAL} : P/A : \frac{5890}{535.10} = 11.01\ KSI$$

$$BOLT\ FORCE : P_B : (11.01)(3.716) : \underline{40.90}$$

TYPICAL PLATE DIMENSIONS

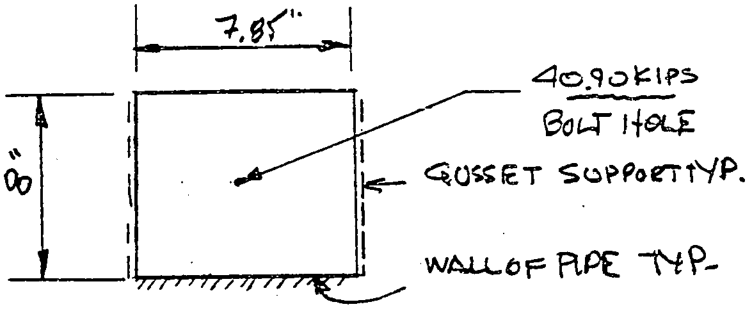

REF: THEORY AND ANALYSIS OF PLATES CLASSICAL & NUMERICAL METHODS PAGE 654 → 655 CASE NO. 80, 81, 83

C) FLANGE SIZE CONT'D

1) ELASTOMER CONT'D

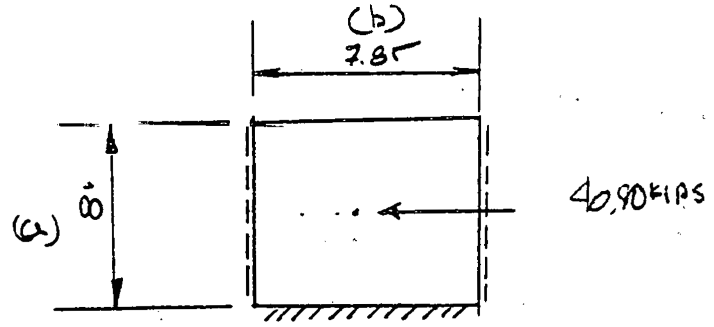

CASE 81: $b/a = \frac{7.85}{8} = 0.98 \approx 1.0$

$M_{x=0,y=b/2}$ $(-)M_{MAX} = C_2 P = (0.1257)(40.90) = 5.14$

CASE 80: FIND EQUIVALENT DISTRIBUTED LOAD

$M_{x=0,y=b/2} = -C_5 P_0 a^2 = (-0.0525)(P_0)(64) = 5.14$

$$P_0 = \frac{5.14}{(0.0525)(64)} = 1.81 \text{ KSI}$$

CASE 83 $a/b \approx 0.80$

$M_{x\,x=a/2,\,y=b/2} = C_1 p_0 b^2 = (0.0144)(1.81)(7.85)^2 =$ 1.61 "KIPS/in

$M_{y\,x=a/2,\,y=b/2} = C_2 p_0 b^2 = (0.0514)(1.81)(7.85)^2 =$ 5.73 "KIPS/in

$M_{y\,x=0,\,y=b/2} = C_3 p_0 b^2 = (0.0955)(1.81)(7.85)^2 =$ 10.65 "KIPS/in

$M_{x\,x=a,\,y=b/2} = \alpha p_0 a^2 = (0.1182)(1.81)(8)^2 =$ 13.69 "KIPS/in

3 AUG 1979

COLDWATER PIPE SUPPORTS 10/40

C) FLANGE SIZE CONT'D

1) ELASTOMER CONT'D

$$\sigma_x = \frac{M6}{t^2} : 21.6 = \frac{(13.69)(6)}{t^2}$$

$$t = \sqrt{\frac{(13.69)(6)}{21.6}} = \underline{1.85"} \rightarrow \underline{2.5"}$$

CHECK PRYING

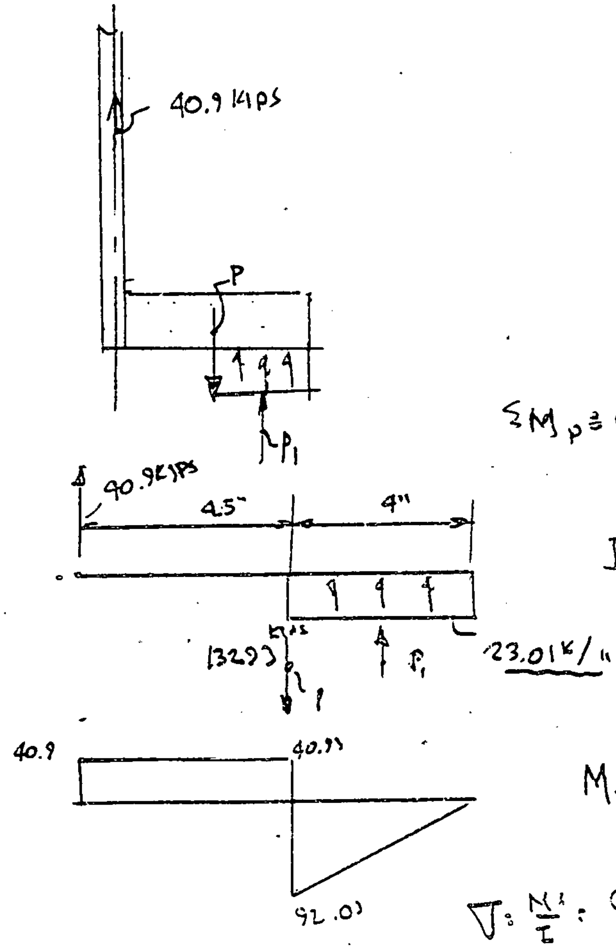

$$\Sigma M_p = 0 : \frac{(40.9)(4.5)}{2} = P_1 = 92.03$$

$$I_{2.5" \text{PLATE}} = \frac{(9.6)(2.5)^3}{12} = 12.50$$

$$M_{MAX} = (40.9)(4.5) = \underline{184.05' \text{KIPS}}$$

$$\sigma = \frac{Mc}{I} = \frac{(184.05)(1.25)}{12.50} = \underline{18.41 \text{ KSI}}$$

RRL

04087
E-5/12

3 AUG. 1977 COLDWATER PIPE SUPPORTS 10/40

C) FLANGE SIZE CONT'D

1) ELASTOMER CONT'D

FINAL CONFIGURATION

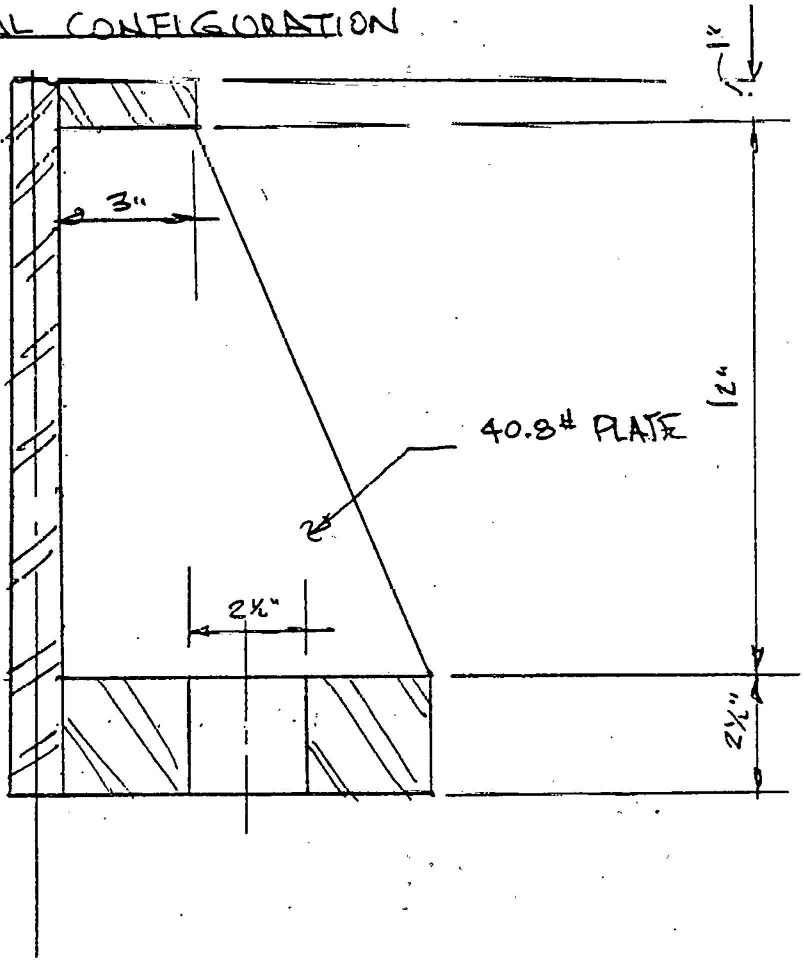

RRL

04097

E-6/12

3 AUG. 1979 COLDWATER PIPE SUPPORT 10/40

c) FLANGE SIZING CONT'D

2) FRP

AXIAL LOAD: 3640 kips
MOMENT: 31,281.7 FT KIPS
PRESSURE: 3 PSI

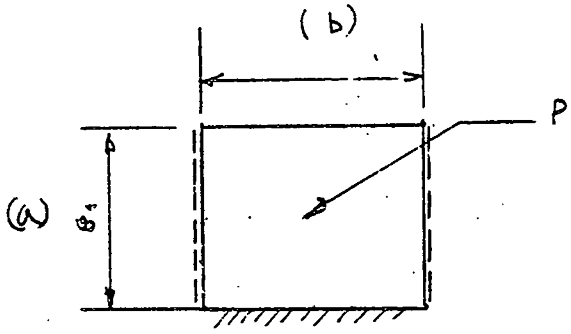

$\sigma : \frac{M}{S} + \frac{P}{A} : \frac{(31281.7)(12)}{52172.64} + \frac{3640}{535.1} : \underline{14.00} \text{ ksi}$

REF SHT ___

$P : (\sigma)(A) : (14)(3.716) = \underline{52.01 \text{ KIPS}}$

REF: THEORY AND ANALYSIS OF PLATES CLASSICAL AND NUMERICAL METHODS PAGE 654 → 655
CASE NO. 80, 81, 83

CASE 81: $b/a = 1.2$

$M_{y\,x=0;\,y=b/2}$ (-) M_{MAX} : $C_2 P : (0.1257)(52.01) = \underline{6.54}$ k-in/in

CASE 80: FIND EQUIVALENT DISTRIBUTED LOAD

$M_{y,\,x=0,\,y=b/2} : -C_5\, p_o\, a^2 : -(0.0525)(P_o)(64) = 6.54$

$P_o : \frac{6.54}{(0.0525)(64)} : \underline{1.95 \text{ KSI}}$

C) FLANGE SIZING CONT'D

2) FRP CONT'D

CASE 83 : $a/b \approx 1.00$

$M_{x},\ x=a/2,\ y=b/2 : C_1 p_o b^2 : (0.0144)(1.95)(7.85)^2 \cdot$ 1.73 "KIPS/IN

$M_{y},\ x=a/2,\ y=b/2 : C_2 p_o b^2 : (0.0514)(1.95)(7.85)^2 =$ 6.17 "KIPS/IN

$M_{y}\ x=0,\ y=b/2 : C_3 p_o b^2 \cdot (0.0955)(1.95)(7.85)^2 =$ 11.45 "KIPS/IN

$M_{y}\ x=a,\ y=b/2\ \ \alpha p_o a^2 \cdot (0.1182)(1.95)(8)^2 =$ 14.75 "KIPS/IN

$$\sigma : \frac{M6}{t^2} : 21.6 = \frac{(14.75)(6)}{t^2}$$

$$t = \sqrt{\frac{(14.75)(6)}{21.6}} = 2.02\ IN \rightarrow 3.25\ IN$$

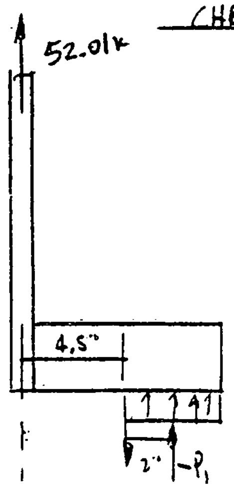

CHECK PRYING

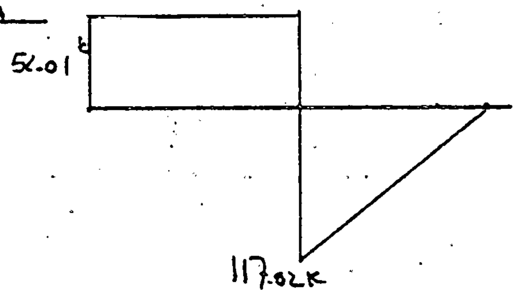

$M_{MAX} : (52.01)(4.5) = 334.05$ "KIPS

$$I_{xx} : \frac{bh^3}{12} : \frac{(7.85)(3.25)^3}{12} = 22.46\ IN^4$$

$$P_1 : \frac{(52.01)(4.5)}{2} = 117.02\ KIPS$$

$$\sigma : \frac{Mc}{I} : \frac{(334.05)(1.63)}{22.46} = 24.17\ ksi$$

P = 169.03 KIPS

RRL

04037
E-3/12

3 AUG 1979

COLDWATER PIPE SUPPORT 10/40

C) FLANGE SIZING CONT'D

2) FRP CONT'D

FINAL CONFIGURATION

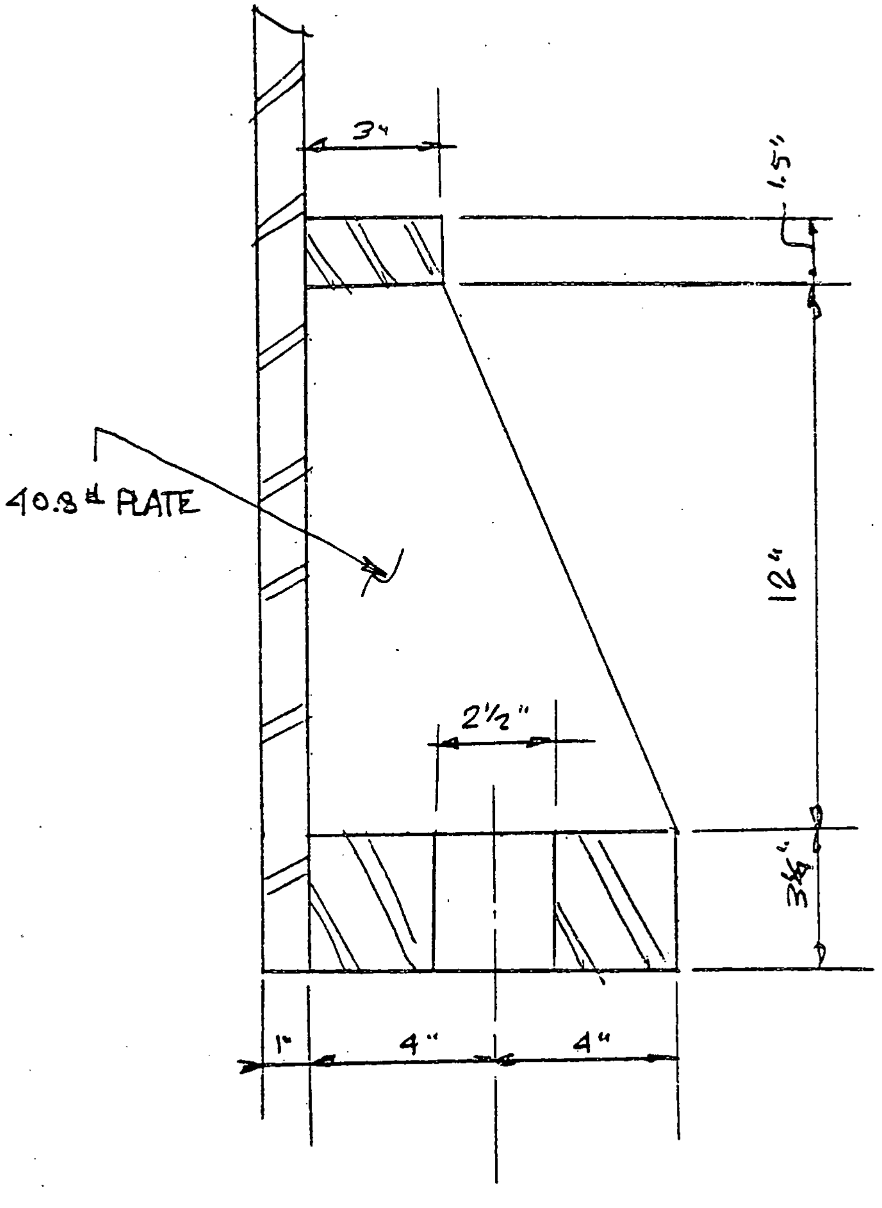

RRL

04037
E-9/12

3AUG 1979 COLDWATER PIPE SUPPORTS 10/40

C) FLANGE SIZE CONT'D

3) POLY

AXIAL LOAD: 2300KIPS
MOMENT: 14753.57FT. KIPS
PRESSURE: 3PSI

$$\sigma : P/A + \frac{Mc}{S} : \frac{2300}{535.1} + \frac{(14753.57)(12)}{52172.64} = \underline{7.69\,\text{KSI}}$$

$$P : (\sigma)(A) : (7.69)(3.716) = \underline{28.58\,\text{KIPS}}$$

TYPICAL PLATE

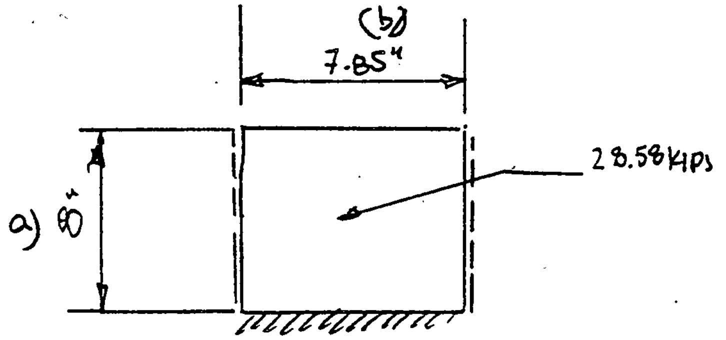

REF: THEORY AND ANALYSIS OF PLATES CLASSICAL
AND NUMERICAL METHODS PAGE 654-655
CASE NO. 80, 81, 83

CASE 81: $b/a : 1.0$

$M_{y},\ x=0;\ y=b/2$ (-) $M_{MAX} : C_2 P : (0.1247)(28.58) = 3.59$ "KIPS/"

CASE 80: DETERMINE EQUIVALENT LOAD

$M_{y},\ x=0;\ y=b/2 \quad 4.26 = (0.0525)(P_0)(64)$

$$P_0 = \frac{3.59}{(0.0525)(64)} = \underline{1.07\,\text{KSI}}$$

RRL

04097
E-10/12

3 AUG 1979 COLDWATER PIPE SUPPORTS 10/40

C) FLANGE SIZE CONT'D

3) POLY CONT'D

CASE 83 : $a/b > 0.$

$M_{x, x=a/2, y=b/2} : C_1 p_o b^2 : (0.0144)(1.07)(7.85)^2 =$ 0.95 "kips/in

$M_{y, x=a/2, y=b/2} : C_2 p_o b^2 : (0.0514)(1.07)(7.85)^2 =$ 3.39 "kips/in

$M_{y, x=0, y=b/2} : C_3 p_o b^2 : (0.0955)(1.07)(7.85)^2 =$ 6.30 "kips/in

$M_{x, x=a, y=b/2} : \alpha_1 p_o a^2 : (0.1182)(1.07)(8)^2 =$ 8.01 "kips/in

$$t : \sqrt{\frac{M(6)}{\sigma_{all}}} : \sqrt{\frac{(8.09)(6)}{21.6}} = 1.50 \text{ IN} \rightarrow \underline{2.0''}$$

CHECK PRYING

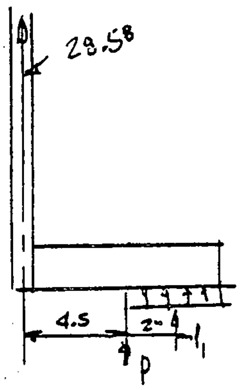

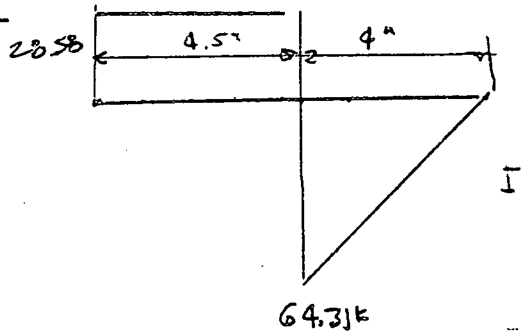

$I : \frac{bh^3}{12} : \frac{(7.95)(2)^3}{12} : 5.23$

$M_{MAX} : 128.61$ "kips

$P_1 : \frac{(28.58)(4.5)}{2} =$ 64.31 kips

$\sigma : \frac{Mc}{I} : \frac{(128.61)(1)}{5.23} :$ 24.59 ksi

P : 28.58 + 64.31 = 92.89 kips

RRL

04037
E-11/12

3 AUG 1979 COLDWATER PIPE SUPPORTS 10/40

C) FLANGE SIZE CONT'D

3) POLY

FINAL CONFIGURATION

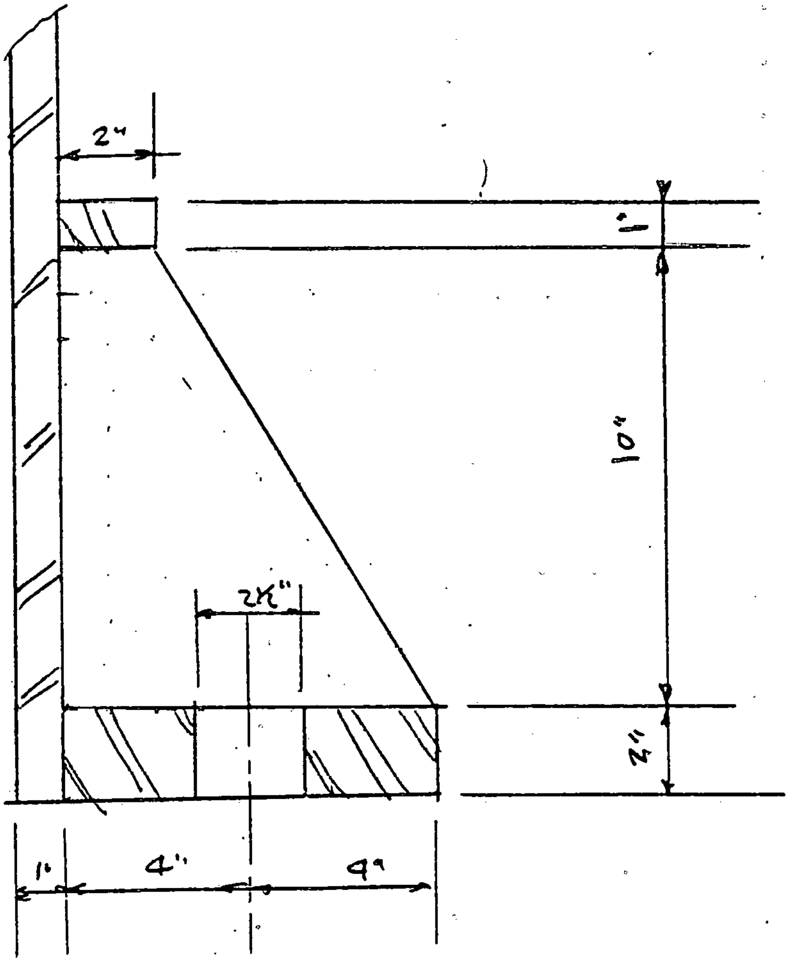

TABLE

MATERIAL	TOP BAR DIA	BOTTOM BAR DIA	TRAN SHELL THICKNESS*	FLANGE SIZE THICKNESS
FRP	15 IN.	8 IN.	3/4 IN	3 1/4 IN.
ELAS	19 IN.	10 IN.	3/4 IN.	2 1/2 IN.
POLY	12 IN.	6 1/2 IN.	3/4 IN.	2 IN.

* OVALITY ± 0.35"

APPENDIX "F"

DESIGN OF TWO CABLE TERMINATIONS FOR POLYETHYLENE TRANSITIONS SECTION

RRL

04037
F-1/7

3 AUG. 1979

COLDWATER PIPE SUPPORT 10/40

GIVEN: CONFIGURATION OF POLYETHYLENE PIPE TRANSITION FROM 7-12' DIA TO 1-30' DIA.

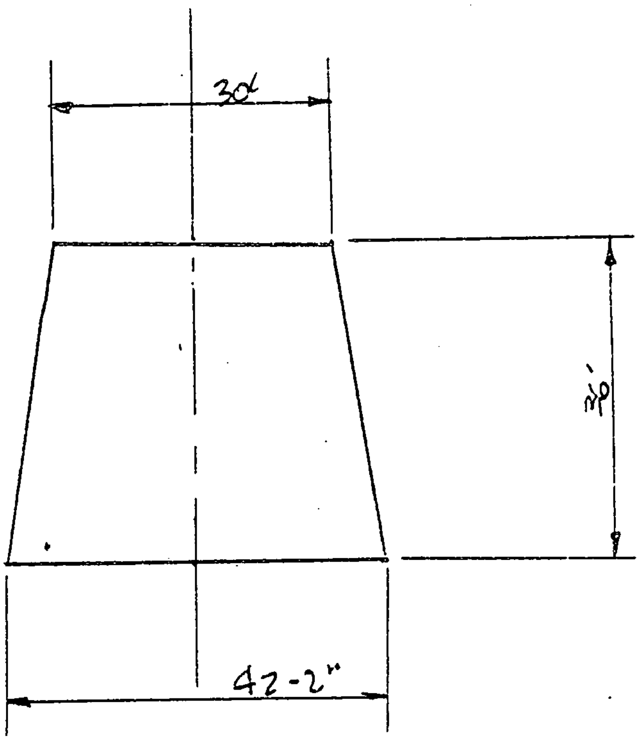

PROBLEM: DETERMINE "2" CONFIGURATIONS FOR ATTACHING THE CABLE THAT WILL BE RUNNING FROM STABILIZING WEIGHT TO THE TRANSITION.

RRL

04037.
F-2/7

3AUG1979

COLDWATER PIPE SUPPORTS 10/40

1) CONFIGURATION CONNECTING CABLES TO POLYETHYLENE PIPE FLANGE PLATE

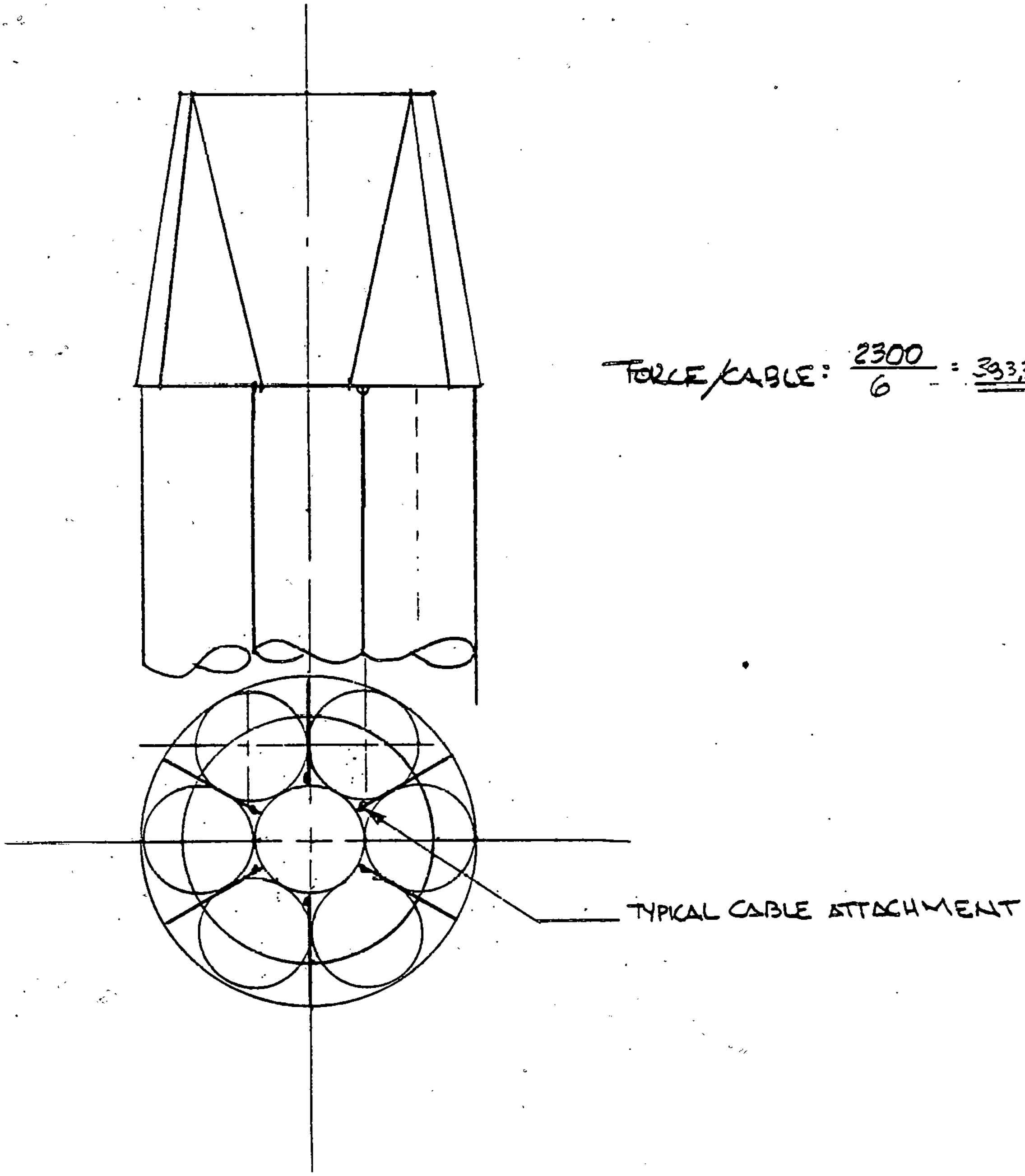

FORCE/CABLE: $\frac{2300}{6} = \underline{\underline{383.33^k}}$

RRL

04097
F-3 /7

3 AUG 1979

COLDWATER PIPE SUPPORT 10/40

1) CONT'D

TYPICAL CONFIGURATION

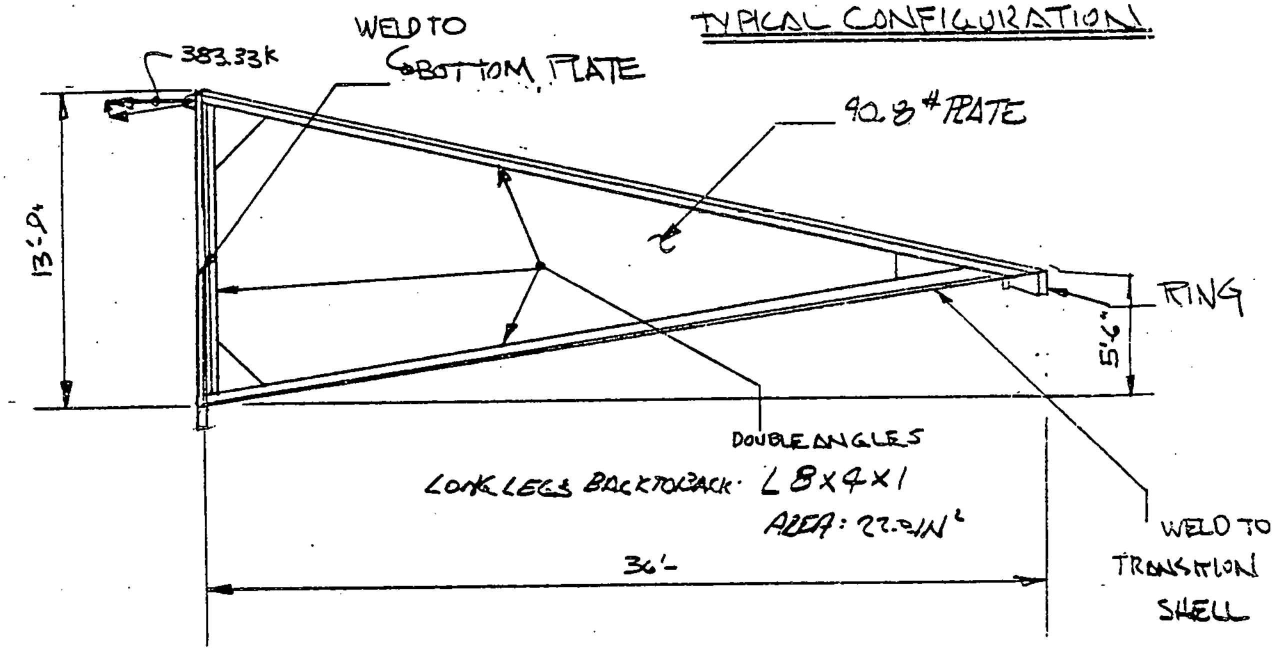

CHECK FORCES AND SECTIONS

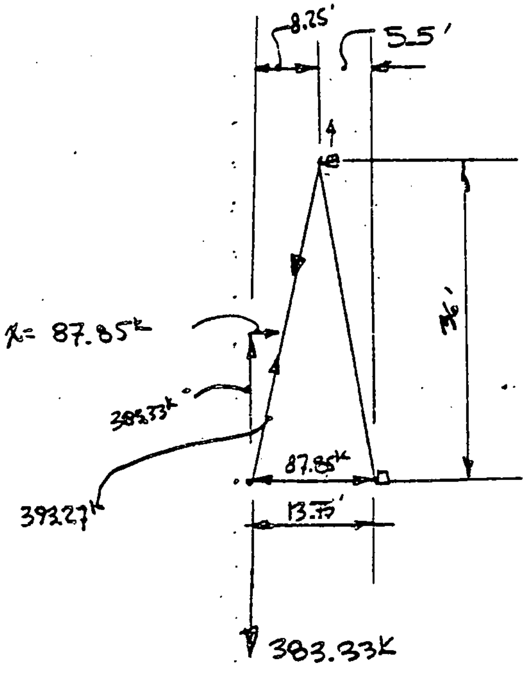

$$\frac{383.33}{36} = \frac{X}{8.25}$$

$$X = \frac{(8.25)(383.33)}{36}$$

RRL   04087

F-4 /7

3 AUG 1979   COLDWATER PIPE SUPPORT 10/40

D CONT'D

CHECK FORCES AND SECTIONS CONT'D

$\sigma : P/A : \frac{393.27}{22.0} = \underline{\underline{17.88 \text{ KSI}}}$

DOES NOT MEET AISC $\frac{KL}{r}$ CRITERIA.

CHECK FORCE ON THE RING

REF: FORMULAS FOR STRESS & STRAIN
5TH EDITION BY ROARK & YOUNG
PAGE 226 LOADING No. 7

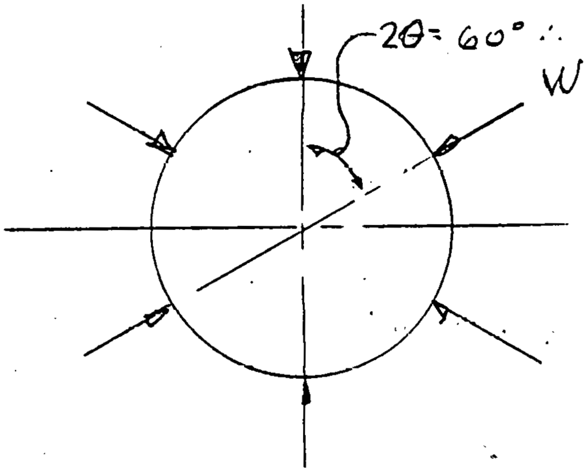

$2\theta = 60° \therefore \theta = 30°$

$W = \underline{\underline{87.85 \text{ KIPS}}}$

$30° : \frac{\pi(30)}{180} \text{ RAD.} =$

$+M_{MAX} : \frac{WR}{2}\left(\frac{1}{\sin\theta} - \frac{1}{\theta}\right) : \frac{(87.85)(180)}{2}\left(\frac{1}{\sin 30°} - \frac{1}{\underbrace{30°}_{RAD}}\right) = \underline{71270 \text{ "KIPS}}$

$-M_{MAX} : \frac{WR}{2}\left(\frac{1}{\theta} - \frac{\cos\theta}{\sin\theta}\right) : \frac{(87.85)(180)}{2}\left(\frac{1}{\underbrace{30°}_{RAD}} - \frac{\cos 30°}{\sin 30°}\right) = \underline{1405.84 \text{ "KIPS}}$

$S_{xx \text{ REQ'D}} : \frac{1405.84}{21.6} = \underline{65.09 \text{ IN}^3}$

THE 8" FLANGE IS NOT SUFFICIENT FOR THE MOMENT GENERATED BY THE CABLE SUPPORTS.

1) <u>CONT'D</u>

A SECTION JUST BELOW THE FLANGE AREA WILL BE BOXED ~~FOR~~ FOR BOTH MOMENT AND TORSION RESISTANCE.

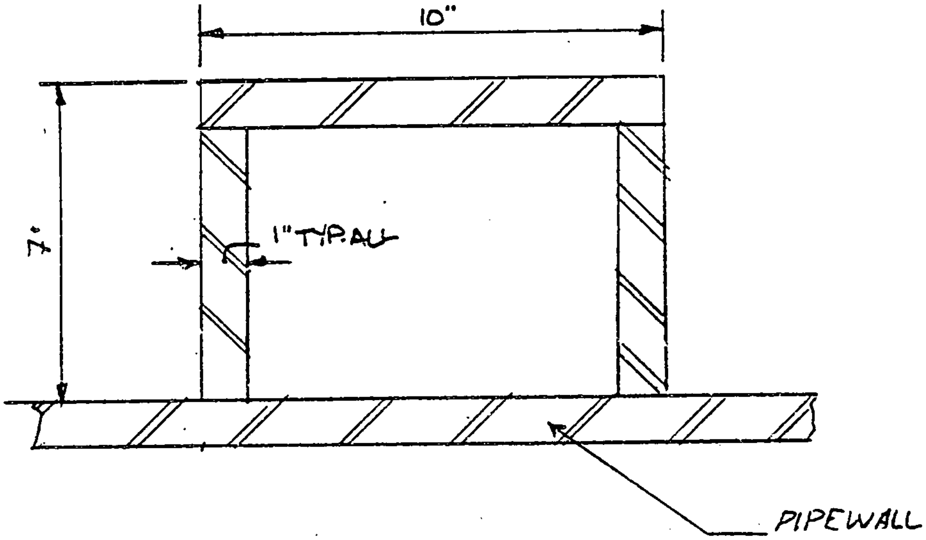

<u>SECTION PROPERTIES:</u>

$I_{xx} : \frac{(10)(8)^3}{12} - \frac{(8)(6)^3}{12} = \underline{282.67 IN^4}$

$S_{xx} : \frac{I_x}{h/2} : \frac{282.67}{4} : \quad 70.67\ IN^3$

$\underline{\underline{70.67 > 65.09 \quad O.K.}}$

RRL

04097
F-6/7

6 AUG. 1979

COLDWATER PIPE SUPPORT 10/40

2) CONFIGURATION ATTACHING CABLES TO THE "GUSSET ON THE WALL OF THE TRANSITION.

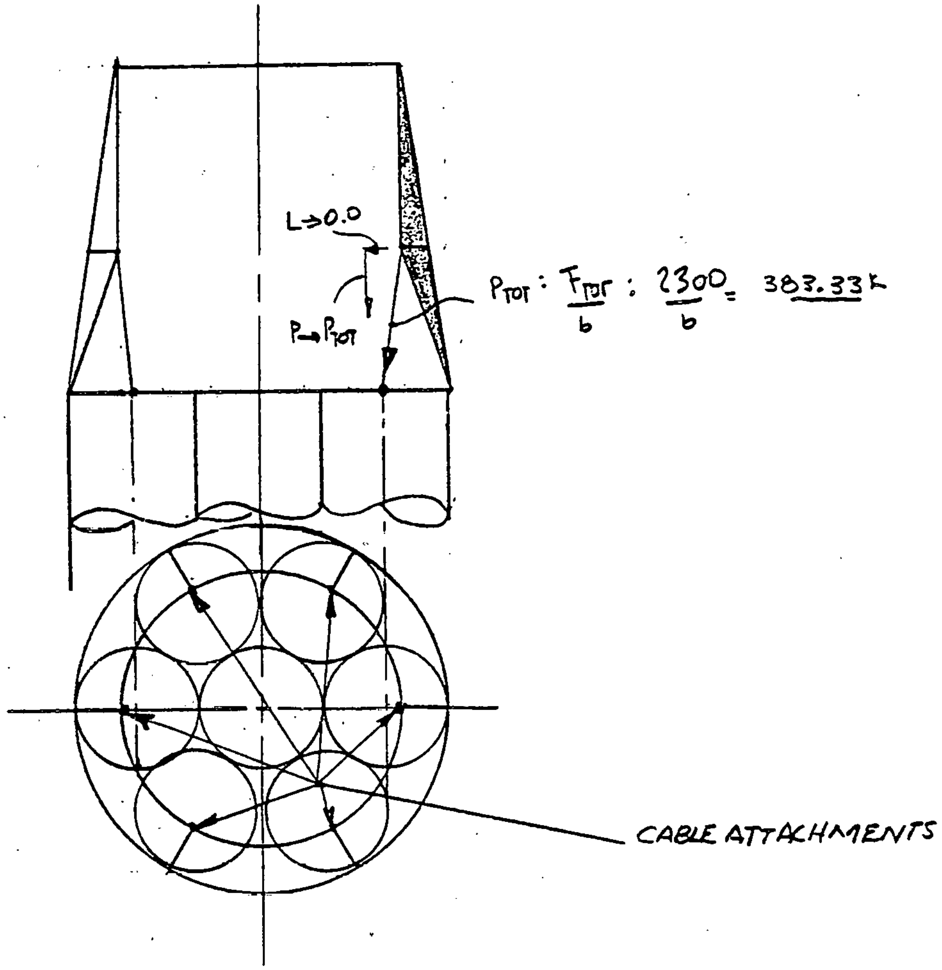

$P_{TOT} : \frac{F_{TOT}}{b} : \frac{2300}{b} = 383.33^{k}$

RRL

01097
F-6A/7

6 AUG 1979

COLDWATER PIPE SUPPORT 10/40

2) CONT'D

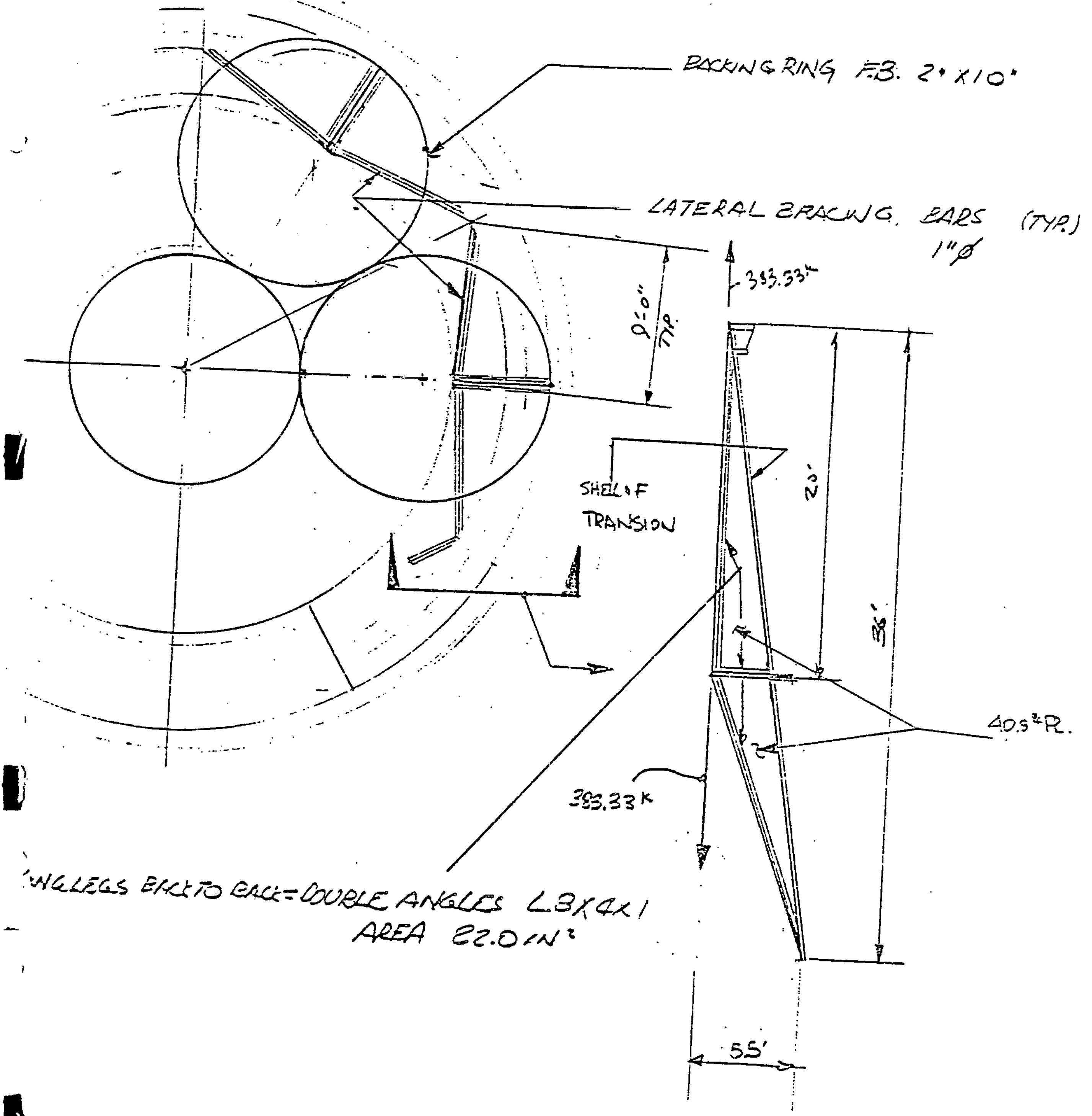

RRL

04087

F-7/7

6 AUG 1979 COLDWATER PIPE SUPPORT 10/40

2) CONT'D

CHECK STRESSES IN SUPPORT

$\sigma : P/A : \frac{383.33}{22.00} =$ 17.42 KSI

CHECK $\frac{KL}{r}$: $\frac{(1)(20)(12)}{1.75} = 138 > 120$ $\frac{KL}{r}$ AISC REQ'D NOT MET.

1) THE 1"IN DIA. BARS WILL BE IN TENSION ONLY
2) FOR SECONDARY SUPPORT ONLY.

APPENDIX "G"

DESIGN OF SPHERE FOR SEALING PADS

RRL

01087
G-1/6

6 AUG. 1971 COLDWATER PIPE SUPPORTS 10/46

GIVEN: 38'-0" DIA. SPHERE AT THE TOP OF THE TRANSITION OF THE COLD WATER.

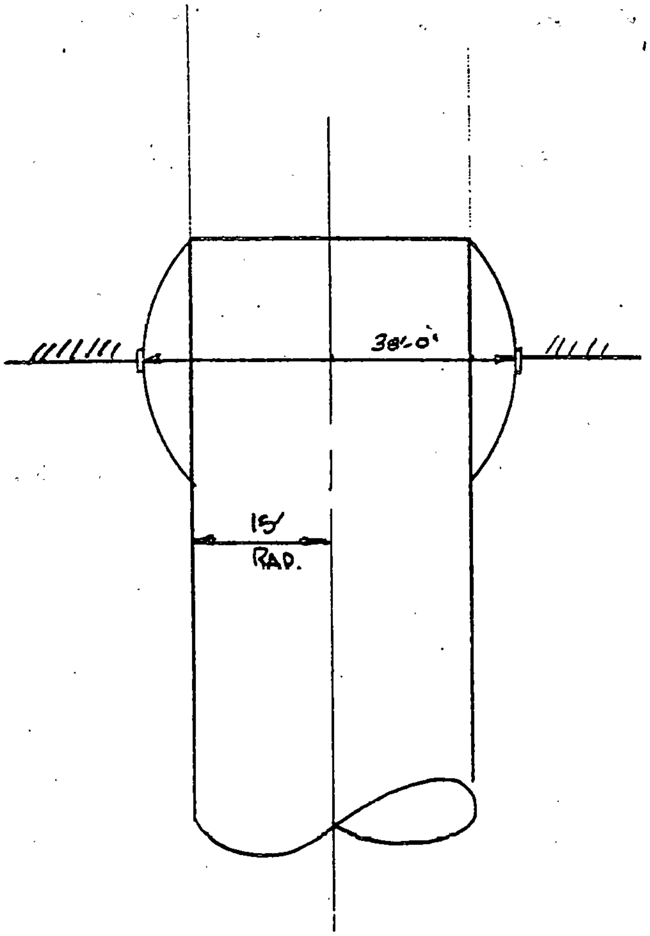

PROBLEM: DETERMINE TOLERANCES FOR THE SPHERE, SO AN ACCEPTABLE SEAL MAY BE MAINTAINED.

RRL

04037
G-2/6

6 AUG. 1979 COLDWATER PIPE SUPPORTS

SPHERE DESIGN

THE TOLERANCE FOR THE SPHERE MUST BE SUCH THAT 1/2" MUST BE MAINTAINED AFTER THE SURFACE IS MACHINE FOR THE SEAL.

1IN STAINLESS STEEL PLATE TO BE USED

TOLERANCE OF 1/2" ON THE RADIUS IS 1" ON THE DIA.

$$\text{TOLERANCE} : \frac{\text{VARIANCE}}{\text{DIA.}} : \frac{1\text{IN}}{(38)(12)} = 0.0022$$

TOLERANCE: 0.22%

RRL

04097

G-3/6

6 AUG. 1979

COLDWATER PIPE SUPPORTS 10/40

SPHERE DESIGN CONT'D

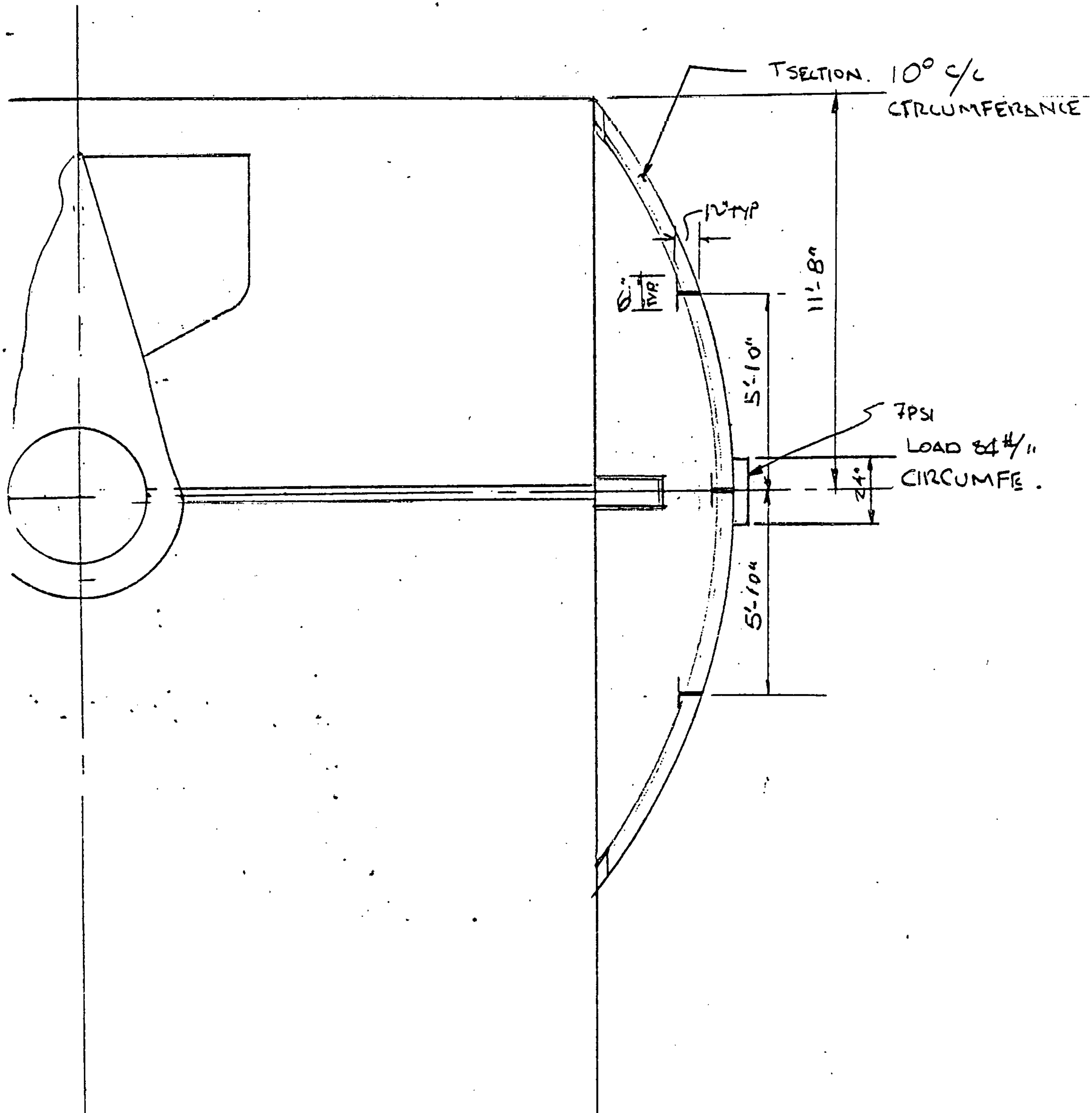

RRL

01087
G-4/6

6 AUG 1979 COLDWATER PIPE SUPPORTS 10/40

SPHERE DESIGN CONT'D

REF: FORMULAS FOR STRESS AND STRAIN
5TH EDITION ROARK
PAGE 474 CASE 1a

$$\beta : \left[3\left[1-\nu^2\right]\left(\frac{R_2}{t}\right)^2\right]^{1/4} : \left[3(1-0.3^2)\left(\frac{228}{1.0}\right)^2\right]^{1/4} = 19.41$$

$$K_1 = 1 - \frac{1-2\nu}{2\beta}\cot(\phi-\omega) :$$

$$K_2 = 1 - \frac{1+2\nu}{2\beta}\cot(\phi-\omega) :$$

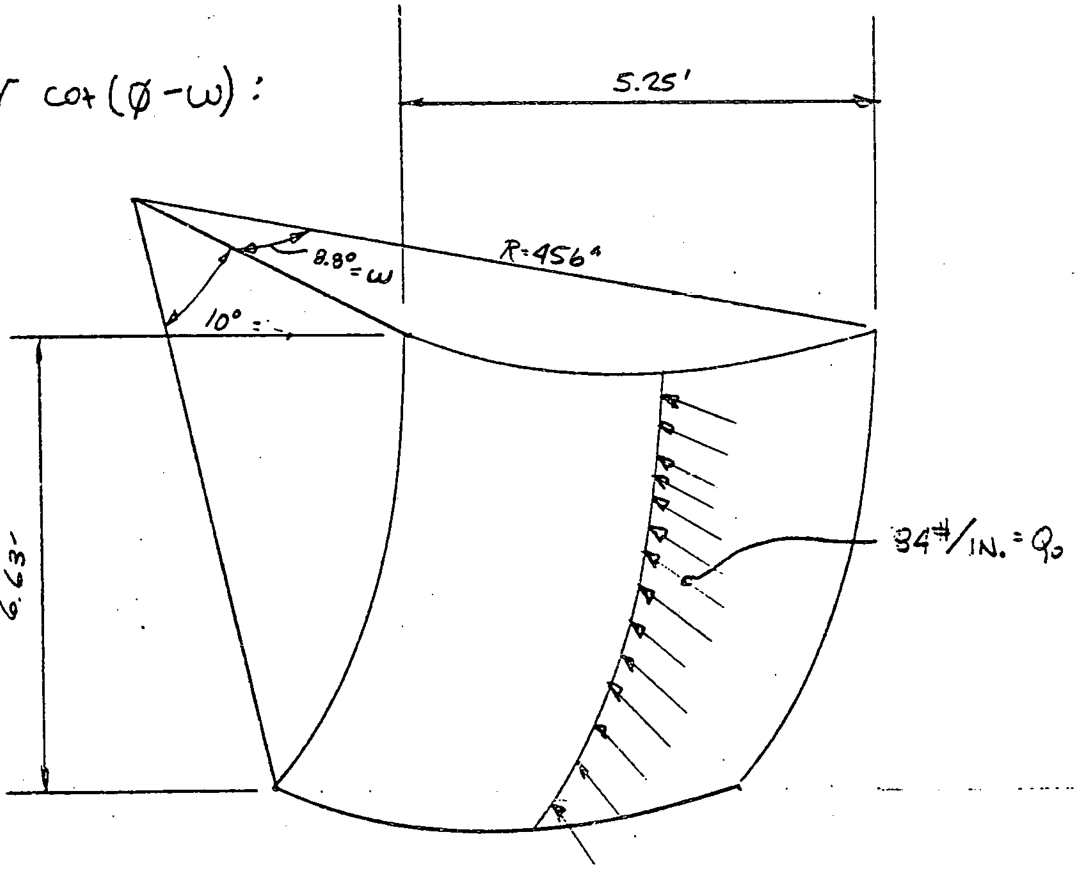

RRL

04037
9-5/6

7AUG.1979 COLDWATER PIPE SUPPORTS 10/40

SPHERE DESIGN CONT'D

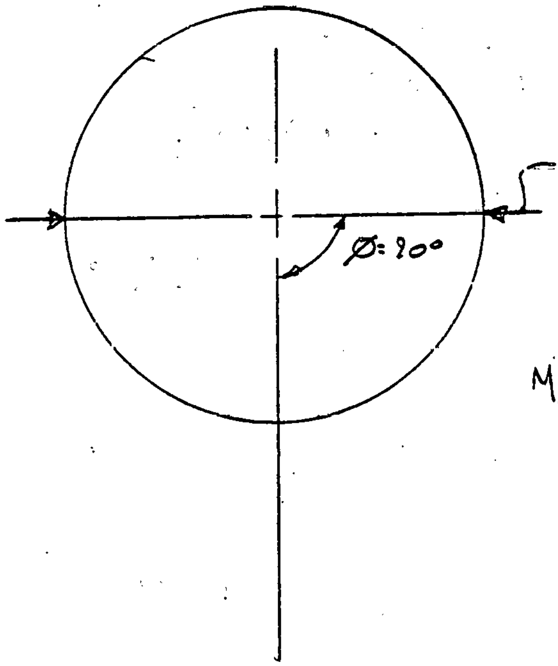

M_1 Max@ $\omega : \frac{\pi}{4\beta} : \frac{\pi}{4(19.41)} : \underline{0.04047}$

$$K_1 = 1 - \left[\frac{1-2\nu}{2\beta} \cot(\phi - \omega) \right] : 1 - \left[\frac{1-2(0.3)}{2(19.41)} \cot\left(\frac{\pi}{2} - 0.04047\right) \right] = \underline{0.99958}$$

$$K_2 = 1 - \left[\frac{1+2\nu}{2\beta} \cot(\phi - \omega) \right] : 1 - \left[\frac{1+2(0.03)}{2(19.41)} \cot\left(\frac{\pi}{2} - 0.04047\right) \right] = \underline{0.99833}$$

$$\sigma_1 = \frac{(Q_0)(\cos\phi)}{t} : \frac{(84)(\cos 90°)}{1.0} = \underline{0.0}$$

$$\sigma_2 : \frac{(Q_0)\beta}{2t} \sin\phi \left(\frac{2}{k_1} + k_1 + k_2 \right) : \frac{(84)(19.41)}{(2)(1.0)}(\sin 90°) \left[\frac{2}{0.99958} + 0.99958 + 0.99833 \right]$$

$$\sigma_2 = \underline{3259 \text{ PSI}} : \underline{3.3 \text{ KSI}}$$

$$\sigma_2{}' : \frac{-Q_0 \beta^2 \cos\phi}{K_1 R_2} : \frac{(84)(19.41)^2 \cos 90°}{(0.99958)(228)} = \underline{0.00}$$

RRL

Q109F
G-6 //

7 AUG. 1979 COLDWATER PIPE SUPPORTS 10/40

SPHERE DESIGN CONT'D

REF: THEORY AND ANALYSIS OF PLATES
CLASSICAL & NUMERICAL METHODS
BY: RALPH SZILARD. PAGE 651 CASE No. 76

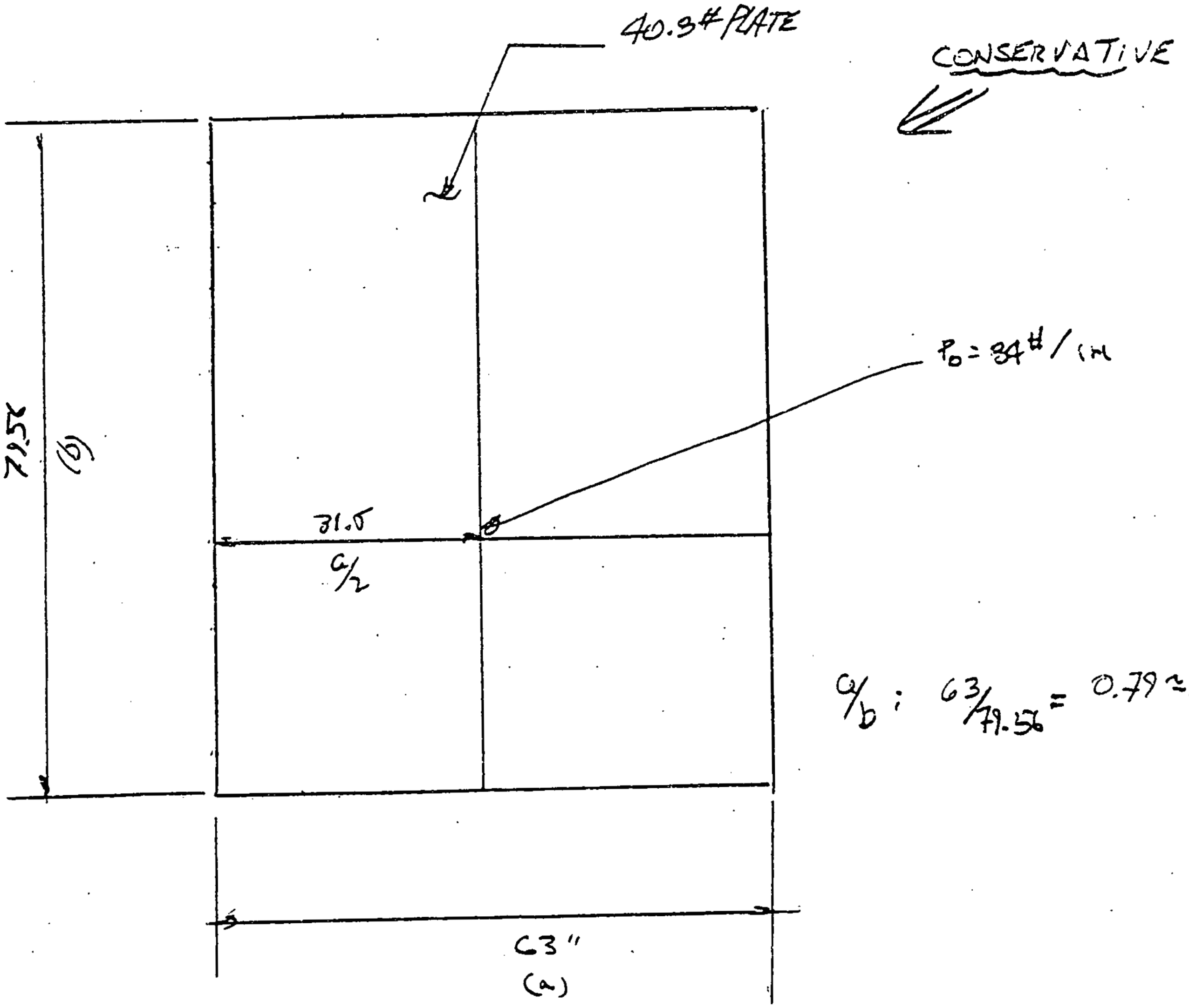

$a/b : 63/79.56 = 0.79 \approx 1.0$

$M_x \; x=a/2, y=b/2 = C_1 \; P_0 \; a : (0.119)(84)(63) = \underline{629.75}\,''\#$

$M_y \; x=a/2, y=b/2 : C_2 \; P_0 \; b : (0.075)(79.56)(84) = \underline{501.23}\,''\#$

$\sigma : \frac{M6}{t^2} ; \frac{(629.75)(6)}{1.0^2} = \underline{3778.99 \text{ PSI}} \Rightarrow \underline{3.8 \text{ ksi}}$

APPENDIX F

GMDI

OTEC 10/40
TECHNICAL REPORT
ON
UNIVERSAL TRANSISTION JOINT
FOR
COLD WATER PIPE

20 SEPT 1979

PREPARED FOR
TRW

GLOBAL MARINE DEVELOPMENT INC.
2302 Martin Street
Irvine, California 92715

RPT-4087-004
REVISION 0
20 SEPT 79

OTEC 10-40

TECHNICAL REPORT
ON
UNIVERSAL TRANSISTION JOINT
FOR
COLD WATER PIPE

JOB 04087 TASK 031300

Prepared by: Dave Alfson by vef
Dave Alfson

Approved by/Date:

Vance E Bohling / 18 Sep 79
MGR. MECHANICAL ENGR.

/ 19 Sep 79
PROJECT ENGR

VP ENGINEERING

GLOBAL MARINE DEVELOPMENT INC.

Newport Beach, Calif.

REVISION RECORD

REV.	DATE	AUTHORIZATION	CHANGE DESCRIPTION	PAGES AFFECTED
0	9/20/79	S.B. WETMORE	INITIAL RELEASE EDC RELEASED 9-20-79 DH	ALL

TABLE OF CONTENTS

APPENDICIES

1.0 ABSTRACT

A study to select from alternative concepts, a feasible concept to suspend large cold water upwelling pipes from Ocean Thermal Energy offshore platforms.

2.0 OBJECTIVE

The objective and intent of this report is to document the selection considerations and final design recommendations for the articulated suspension system used to connect the cold water pipe (CWP) and the platform for the OTEC 10-40 MW plant. The ultimate design is required to provide for relative motion between the cold water pipe and the platform while supporting the pipe and allowing for a joint seal to prevent the infiltration of warm surface water. The recommended design is to consider the ability of the selected concept to be scaled up to larger sizes.

3.0 DESIGN REQUIREMENTS

The structural connection between the CWP and the platform design shall provide the following minimum capabilities.

3.1 Loads

3.1.1 Peak Loads

The design peak dynamic combined loading at the structural connection: 4,000,000 lb. minimum

3.1.2 Load Application

1.5 cycles per minute for 30 years (10^7 cycles).

3.2 Rotational Freedom

The structural connection shall provide for the following angular rotation relative to the platform about any axis in a horizontal plan through the center of rotation of the structural connection:

Operational: ± 10 degrees 95% of time
9.9×10^6 cycles
Survival: ± 25 degrees
5.3×10^5 cycles

4.0 SUMMARY OF RESULTS

A trade study was conducted to compare the relative design merits of an external gimbal, a ball and socket joint and an internal gimbal. The ball and socket joint was eliminated due to the large size of the ball (120' in diameter) for a 30' diameter pipe and the inability to extend the concept to larger pipes. Likewise on comparing the external to the internal gimbal concept, it was determined the external gimbal would become excessively large and difficult to manufacture and install. The internal gimbal by comparison, can be produced with state-of-art structure, bearings and manufacturing techniques as well as offering fewer problems in scaling up the

the design to larger pipes. Based on these conclusions, the internal gimbal is recommended over the other concepts investigated.

The internal gimbal or universal joint consists of a yoke structure connected to the platform and another connected to the CWP. The yoke structures were connected by a spider pin and contain self-lubricated spherical bearings. Figure 4.1.

RMO

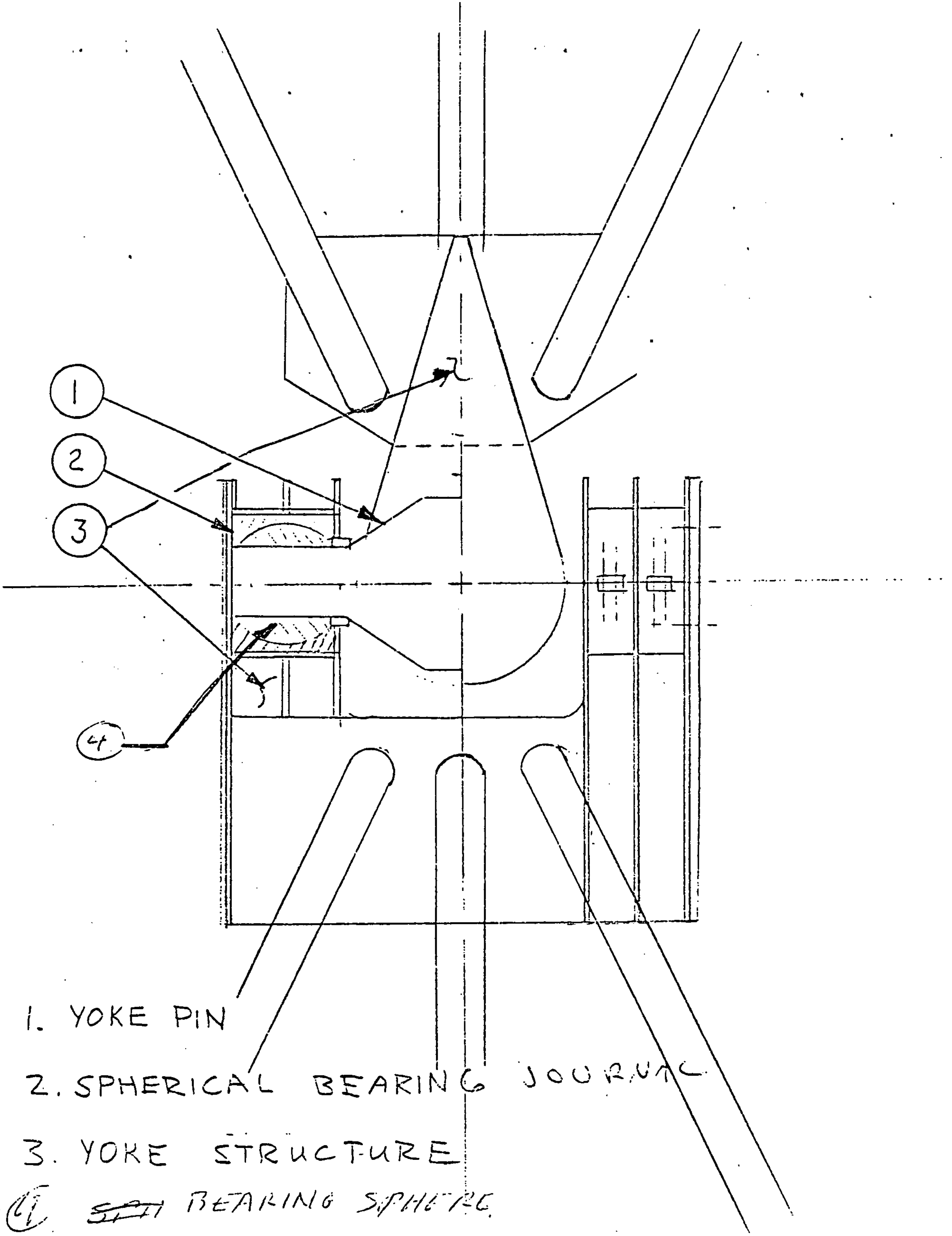

1. YOKE PIN

2. SPHERICAL BEARING JOURNAL

3. YOKE STRUCTURE

④ ~~SPH~~ BEARING SPHERE

FIGURE 4.1

5.0 TECHNICAL DISCUSSION

5.1 Design Selection

The investigation showed that a 120' dia. ball and socket would be required to achieve a ±25° angular rotation. The difficulty in fabrication, holding close machine tolerances and surface finishes on a large structure was considered impractical.

The external gimbal required for the 30' diameter CWP would be approximate 60' in diameter. This structure could be built with existing technology. To expand this structure to larger 50' and 100' diameter CWP the large structures would be very difficult to fabricate and hold the alignment and clearances for the bearings difficult to maintain.

The universal joint was chosen as the simplest design and could be fabricated with existing technology and hardware.

5.2 UNIVERSAL JOINT DESIGN

5.2.1 Head Loss Due to U-Joint

Head loss through the U-joint area was calculated by summing the individual contributors to the overall head loss.
See Appendix A. The head loss due to the U-joint and its supports was calculated by hydrodynamic drag against the obstructions $D = C_D\ q\ Ap\ (lb_f)$

where: D = Hydrodynamic drag force (lb_f)

C_D - Coefficient of drag (estimated from empirical data)

g = Dynamic pressure ($1/2\, p V^2$)

p = Density of sea water

V = Velocity of water at that point

A_p = Projected area

Each component was calculated separately and these drag forces were converted into feet of head loss by the formula:

$$h_L = \frac{D}{A_{pq}} = \frac{D}{A(64)} \text{ ft.}$$

where: D = drag force from equation

A = cross section area of the pipe

P = density of sea water (=1.98 slugs/ft^3)

These losses due the components = .055 ft.

Then the head loss for the enlargement of the pipe from 30' to 40' was calculated using the pipe flow theory equation

$$h_L = K \frac{(V_1 - V_2{}^2)}{2_g} \text{ (ft)}$$

Where: h_L = head loss

K = Coefficient of enlargement

V_1 = Velocity through small diameter

V_2 = Velocity through large diameter

g = 32.174 ft/s^2

The loss for this was calculated to be 0.172 ft.

Total head loss = 0.192 ft + .055 ft - 0.247 ft.

The design requirement was the total head loss to be less than a reduction to the pipe diameter from 30 ft to 25 ft. The reduction was calculated using the pipe flow theory and was 0.503 ft.

5.2.2 Universal Joint Bearings

The bearing chosen as the best suited for this design is a self-lubricated spherical journal bearing such as Lubrite bearing manufactured by Litton-Merrimar Crop, see Appendix B. The three components of the bearings are a spherical journal, a bearing pin shpere and a solid film lubricant. Initial calculation and discussion with manufuacturer indicate that low bearing pressures and low PV can be designed into the bearing and combined with the proper material selection a 30-year life in sea water can be achieved, Figure 2.2.2

shows the configuration and approximate dimensions for a 2,000,000 radial load bearing. The journal is fixed to the yoke structure and the sphere is keyed to the bearing pin. A spherical journal allows for slight misalignment and deflection in the structure. The bearing journal is made from a low alloy steel A36 or equivalent. The bearing surface must be protected from corrosion for its long life in seawater. Inconel 625 is considered the superior material for seawater application due to its freedom from localattach (pitting and crevice corrosion), high corrosion-fatigue strength, high tensile strength and resistance to chloride-ion stress corrosion cracking. The minimum mechanical properties are 120 ksi ultimate 60 ksi yield and corrosion fatigure (10^6 cycles) at 49 ksi. The Inconel is applied to the surface of the steel by weld cladding. See Appendix C.

The material selected for the sphere was alpha nickel aluminum bronze C958. This alloy has good mechanical properties of tensil strength 85 ksi, yield strength of 35 ksi. 25% elongation. This alloy used in conjunction with solid film lubricant G-10 Lubrite by Litton-Merriman has superior bearing characteristics.

The solid film lubricant is applied to the surface of the sphere, the lubricant is extruded and compressed into the recesses of the bearing at high pressure. Litton-Merriman indicate the Lubrite lubricant shears off in a series of thin layers to produce a burnished regenerative lubricating film. The result is a continuous heavy friction reducing film capable of withstanding high pressures. The coefficient friction for Lubrite G-10 from test data was maximum of .59 after 25 x 10^4 cycles. See Appendix B.

The bearing pressure was calculated by the cosine distribution method. The 2,000,000 bearing P_{max} is 2.81 ksi. See Appendix A. Merriman recommends not exceeding 5 ksi which gives a factor of 1.8. The PV (total load/project area and sliding velocity) is a maximum of 12,000 for the $\pm 25^{\circ}$ rotation and 4,500 for the $\pm 10^{\circ}$ rotation. This is a safety factor of 2.5 and 4.5 on the recommended PV 30,000 for Lubrite.

5.2.3 Universal Joint Bearing Pins

The bearing pins are made up of two forgings which are interlocked and welded to form the pin spider. Figure 5.2.3.

The material selected for the pin is a nickel alloy steel ASTM 4330, because of its good mechanical properties in large forgings and ability for heat treatment. The minimum properties expected for this material are 100 ksi uts, 80 ksi ys, 17% Elong. For 30-years service life in seawater environment, the corrosion resistance will have to be maximized. This can be accomplished by cladding all surfaces of the pin with Inconel 625 the same as mentioned for the journal.

The maximum stress in the pin is due to bending and assuming a 1.5 stress concentration factor J_{max} - 40 ksi, Refer to Appendix A. This gives a safety factor of 2 for the pin forging.

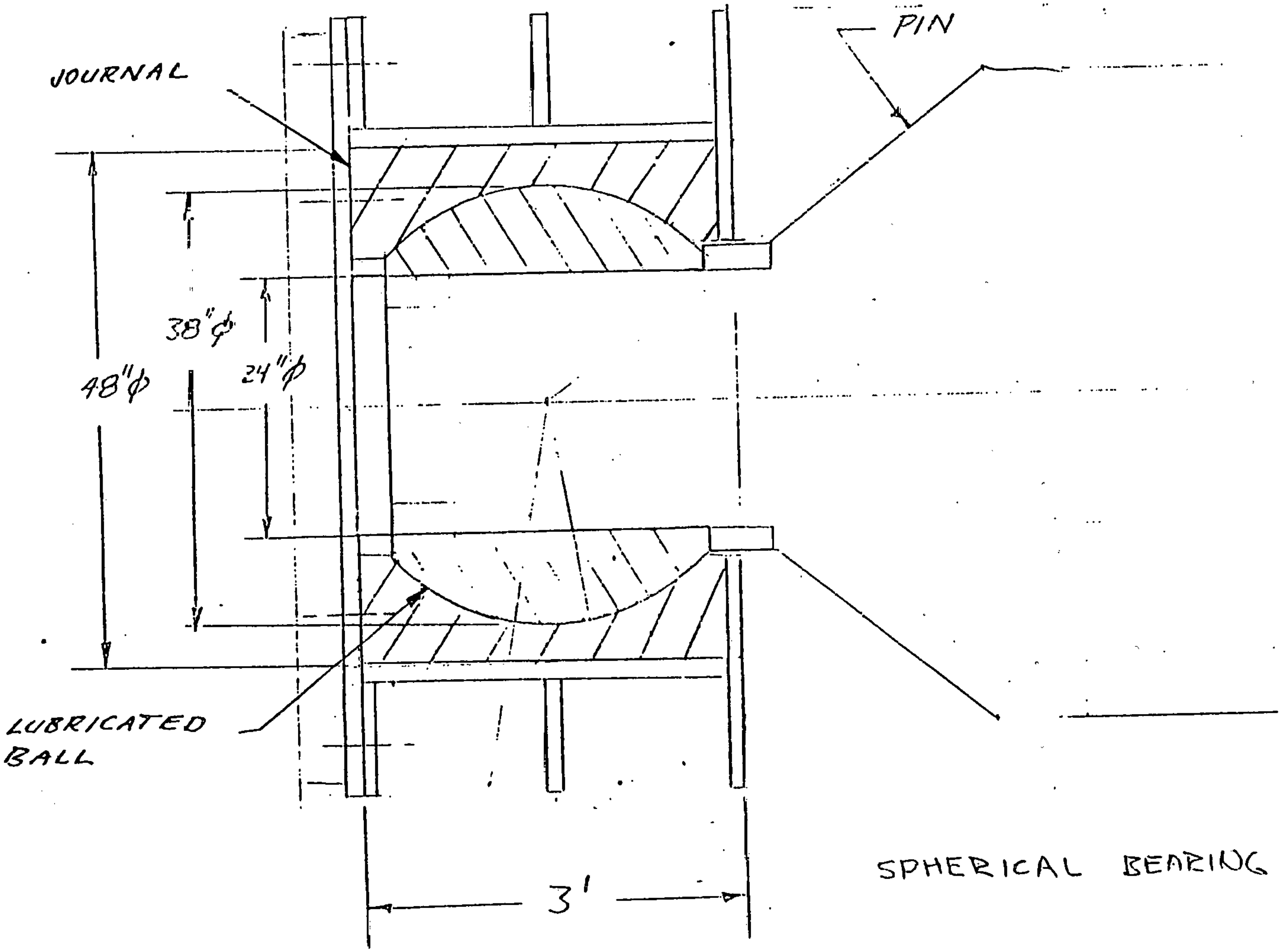
PIN
JOURNAL
38"ϕ
48"ϕ
24"ϕ
LUBRICATED BALL
3'
SPHERICAL BEARING

FIGURE 5.2.2

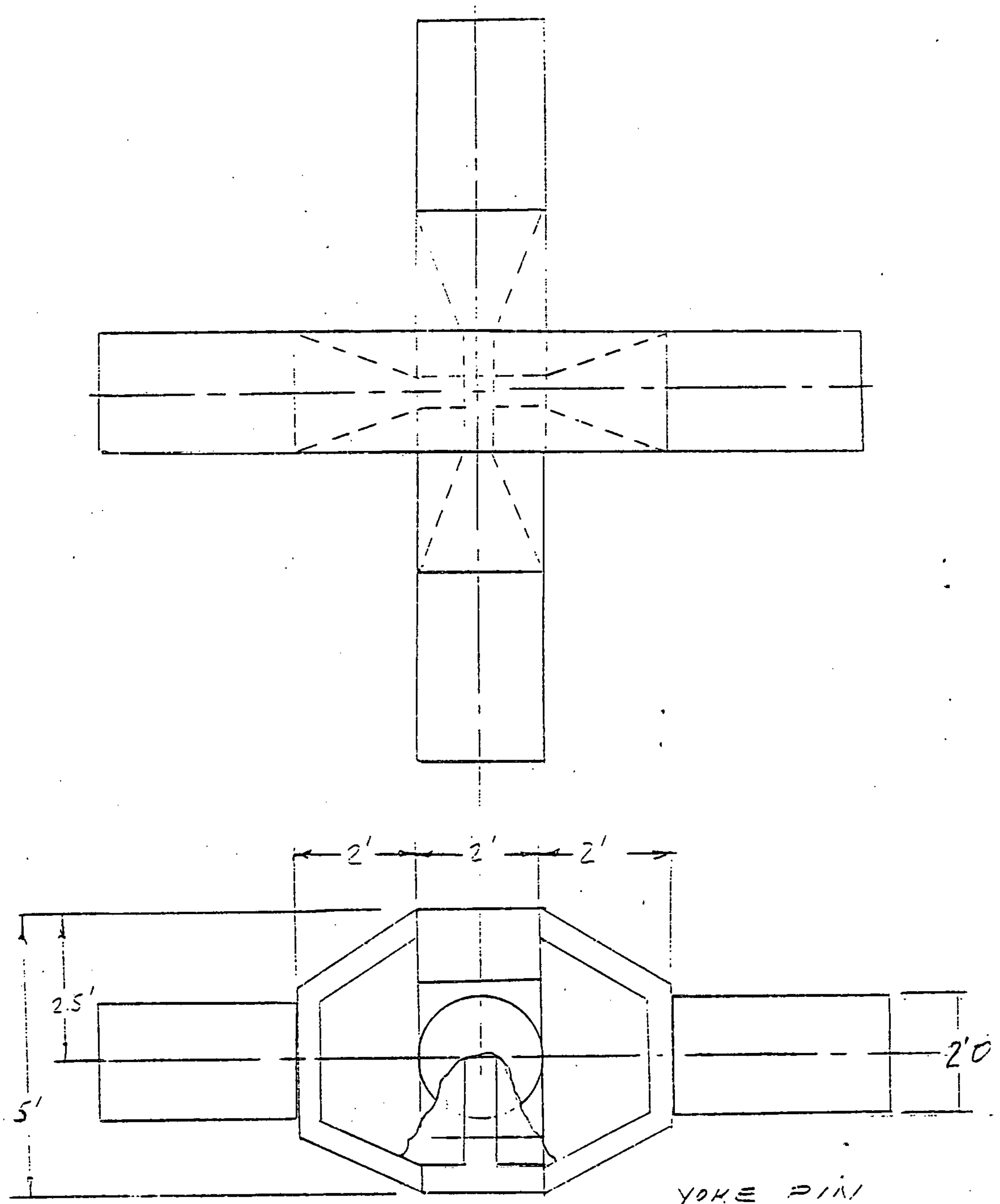

YOKE PLAN
RMO 7/79

FIG 5.2.3.

APPENDIX A

CALCULATIONS FOR BEARING, BEARING PIN & HEAD LOSS

#114

BALL DIA REQUIRED
FOR ° OF ROTATION

6-15-9

30 Ø PIPE	MIN BALL Ø
± 15°	44' Ø
± 20°	60' Ø
± 25°	120' Ø

25' Ø PIPE	
± 25°	100' Ø
± 20°	50 Ø
± 15°	36 Ø

Phone con w/ Lou 6/15/79
1400 — Ref 3-million bottom wt. on FRP
Swivel angle 20°

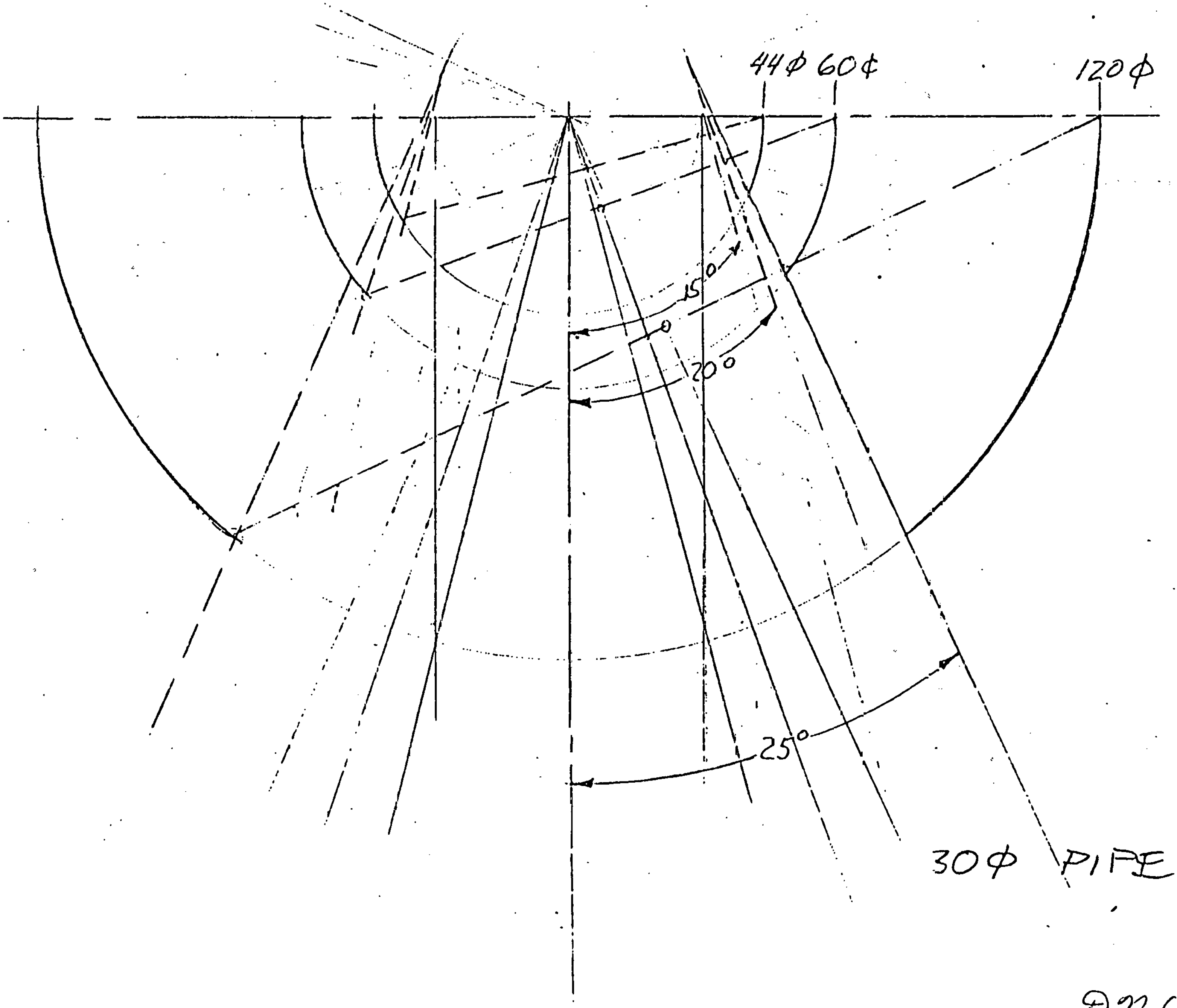

DMG 6-15-9

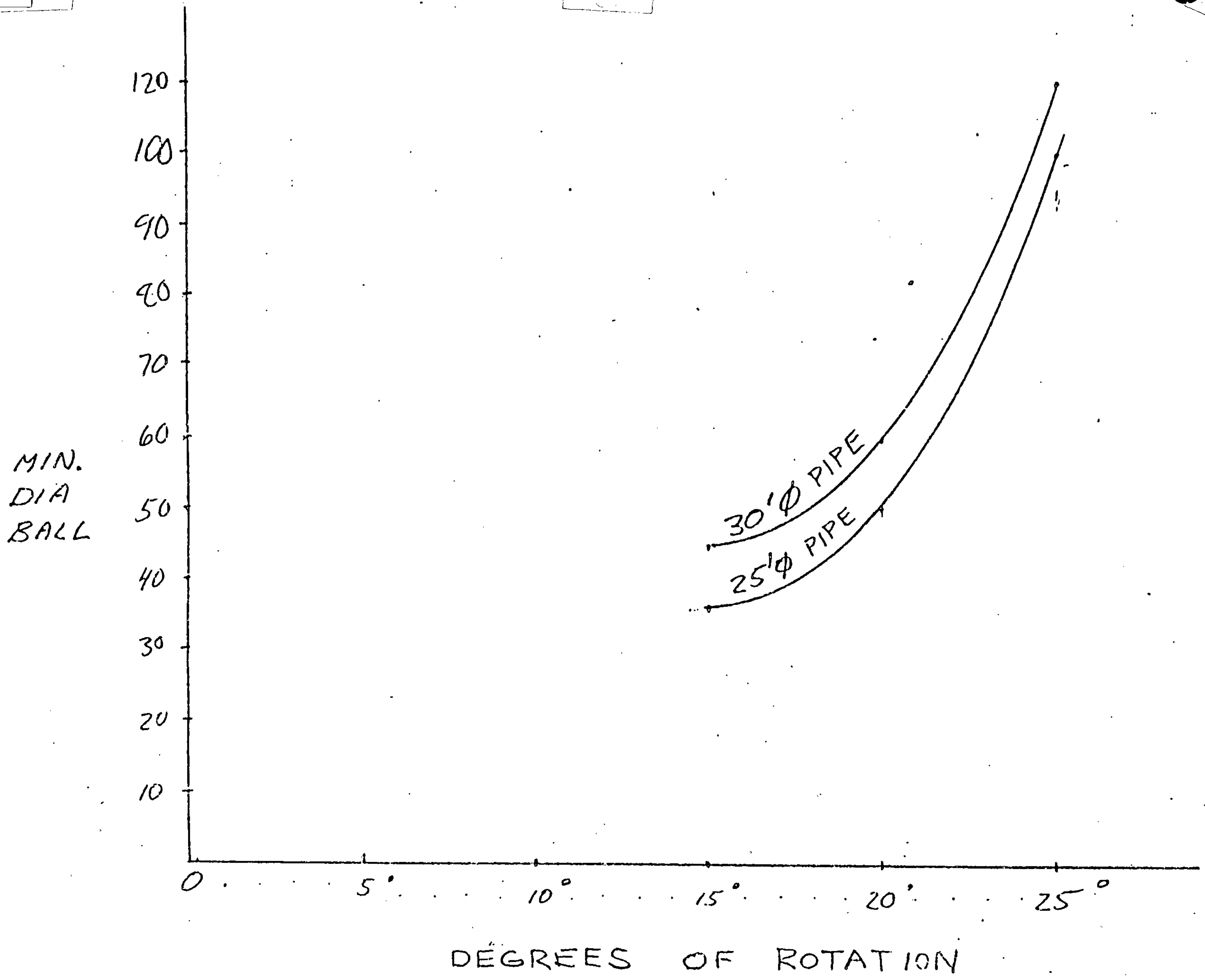
120
100
90
80
70
60
50
40
30
20
10
MIN.
DIA
BALL
30'Ø PIPE
25'Ø PIPE
0
5°
10°
15°
20°
25°
DEGREES OF ROTATION

6-15-9

MECHANICAL ENGINEERING
TECHNICAL FILE
CC 541

JOB NO. 04087

TASK NO. 03/300

FILE NO.

DATE 7/16/79

SUBJECT:

CWP HEAD LOSS THRU
U-JOINT AREA.

SYNOPSIS:

A COMPARISON OF HEAD LOSSES THRU TWO CWP PIPE SUPPORT CONFIGURATIONS TO DETERMINE WHICH HAS A LESSER LOSS, AND/OR IF THE THE LOSS THRU THE U-JOINT AREA IS SIGNIFICANT

REFERENCES:

SCHAUM'S FLUID MECHANICS & HYDRAULICS p 249, 250

PREPARED BY: FRANK NIELSEN DATE 7/13/79

REVIEWED BY: DATE

APPROVALS:

RESPONSIBLE ENGINEER

V. E. BOLDING
MANAGER, MECHANICAL ENGINEERING

F.A[illegible]SEN

CWP HEAD LOSS THRU U-JOINT AREA

CONFIGURATION #1

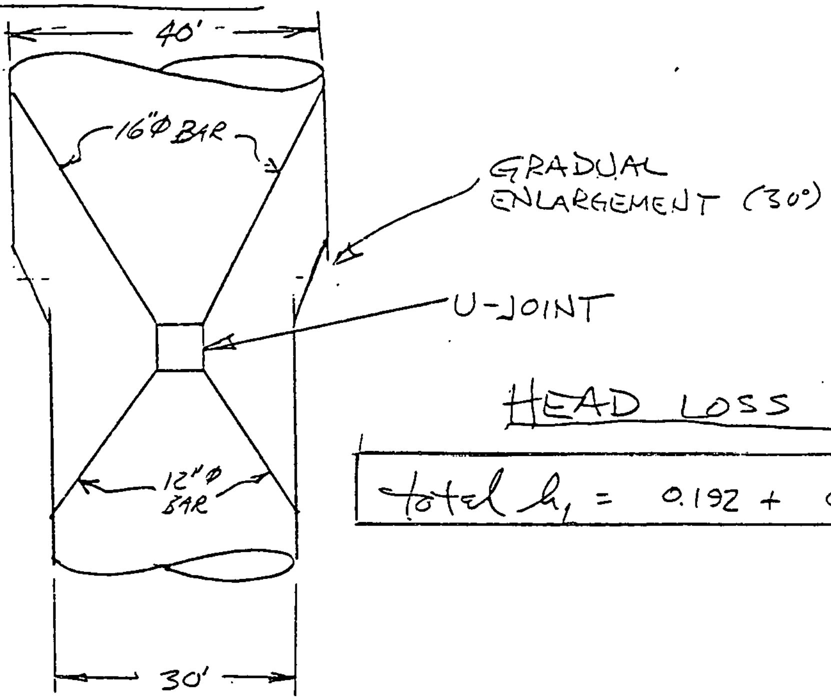

HEAD LOSS SUMMATION

$\boxed{\text{total } h_l = 0.192 + 0.055 = 0.247 \text{ Ft}}$

HEAD LOSS SUMMARY:

SUDDEN ENLARGEMENT

$d_1/d_2 = 1.33$ $K \approx 1.32$ (Schaum's Fluid Mech & Hyd. p250)

$h_L = K\frac{(V_1{}^2 - V_2)^2}{2g} = (1.32)(6^2 - 3.38^2)/2g = 0.192 \text{ Ft}$

SPIDER LEGS (16"Φ & 12"Φ BAR)

$D = C_D \frac{1}{2}\rho V^2 A_p$ (lb_f)

UPPER LEGS:

A_p = PROJECTED FRONTAL AREA = 107 Ft^2

V = FLUID VEL = 3.38 Ft/s

C_D = DRAG COEFF = 0.5

$\rho = 1.98$ slug/Ft^3

LOWER LEGS

$A_p = 60$ FT^2

$V = 6$ Ft/s

$C_D = 0.5$

$\rho = 1.98$ slug/Ft^3

U-JOINT

$A_p = 30$ Ft^2

$V = 6$ Ft/s

$C_D = 1.0$

$\rho = 1.98$ slug/Ft^3

$$D = (0.5)(\tfrac{1}{2})(1.98)(3.38)^2(107) + (0.5)(\tfrac{1}{2})(1.98)(6.0)^2(60) + (1.0)(\tfrac{1}{2})(1.98)(6.0)^2(30)$$

$$D = 605 + 1069 + 1069 = 2743.$$

$$h_L = (605) \times \frac{1}{A_2} \times \frac{1}{64} = .008$$

$$+ 2(1069) \times \frac{1}{A_1} \times \frac{1}{64} = .047$$

$$h_L = .055 \text{ Ft}$$

CWP HEAD LOSS THRU U-JOINT AREA (CONTINUED)

CONFIGURATION #2

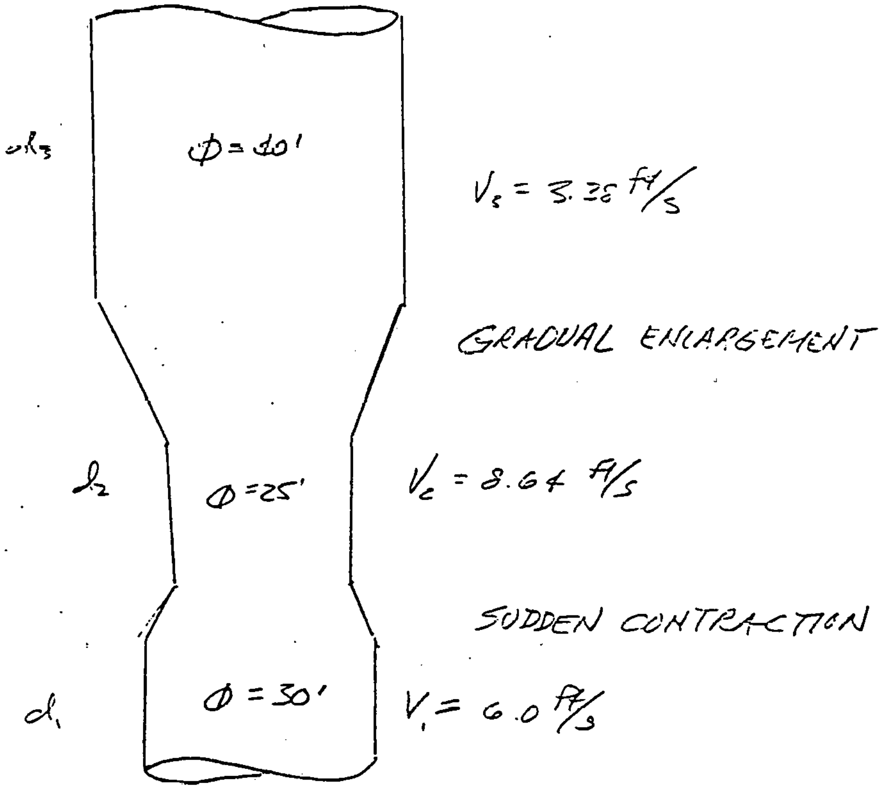

HEAD LOSS SUMMARY

SUDDEN CONTRACTION

$d_1/d_2 = 1.2 \qquad K_c = 0.08$

$$h_L = (0.08)\frac{V_2^2}{2g} = (0.08)\left(\frac{(8.64)^2}{2(32.2)}\right) = 0.093 \text{ ft}$$

GRADUAL ENLARGEMENT

$d_3/d_2 = 1.6 \qquad K_E = .42$

$$h_L = (0.42)\frac{V_2^2 - V_3^2}{2g} = (0.42)\frac{(8.64^2 - 3.38^2)}{2(32.2)} = 0.41 \text{ ft}$$

$$\boxed{\text{total } h_L = 0.41 + 0.093 = 0.503 \text{ ft}}$$

flag spider legs = 120 ft

$h_L = (.5)(120)(6)^2(.99) = 2140 \text{ lb}_F$

$h_L \quad (1)(30)(6)^2(.99) = 1070$

$\boxed{3210 \text{ lb}_F}$

$\boxed{\approx .075 \text{ ft}}$ .071

~~$3210 \text{ lb}_F \times \frac{\text{ft}^2}{\text{lb}_F} \times \frac{144 \text{ in}}{1 \text{ ft}^2} \times$~~

$\frac{\cancel{\text{lb}_F}}{\text{ft}^2} \times \frac{1}{6d} \frac{\cancel{\text{ft}^3}}{\text{lb}}$

$k = .08 \qquad V_2 = 8.64 \text{ ft/s}$

$\frac{3210}{A} \times \frac{1}{6d} \qquad (.08)\frac{74.65}{(2)(32.2)}$

$\boxed{.093 \text{ ft}}$ or less

RRL

00087

12 JULY 1978

COLDWATER PIPE SUPPORTS 10/40

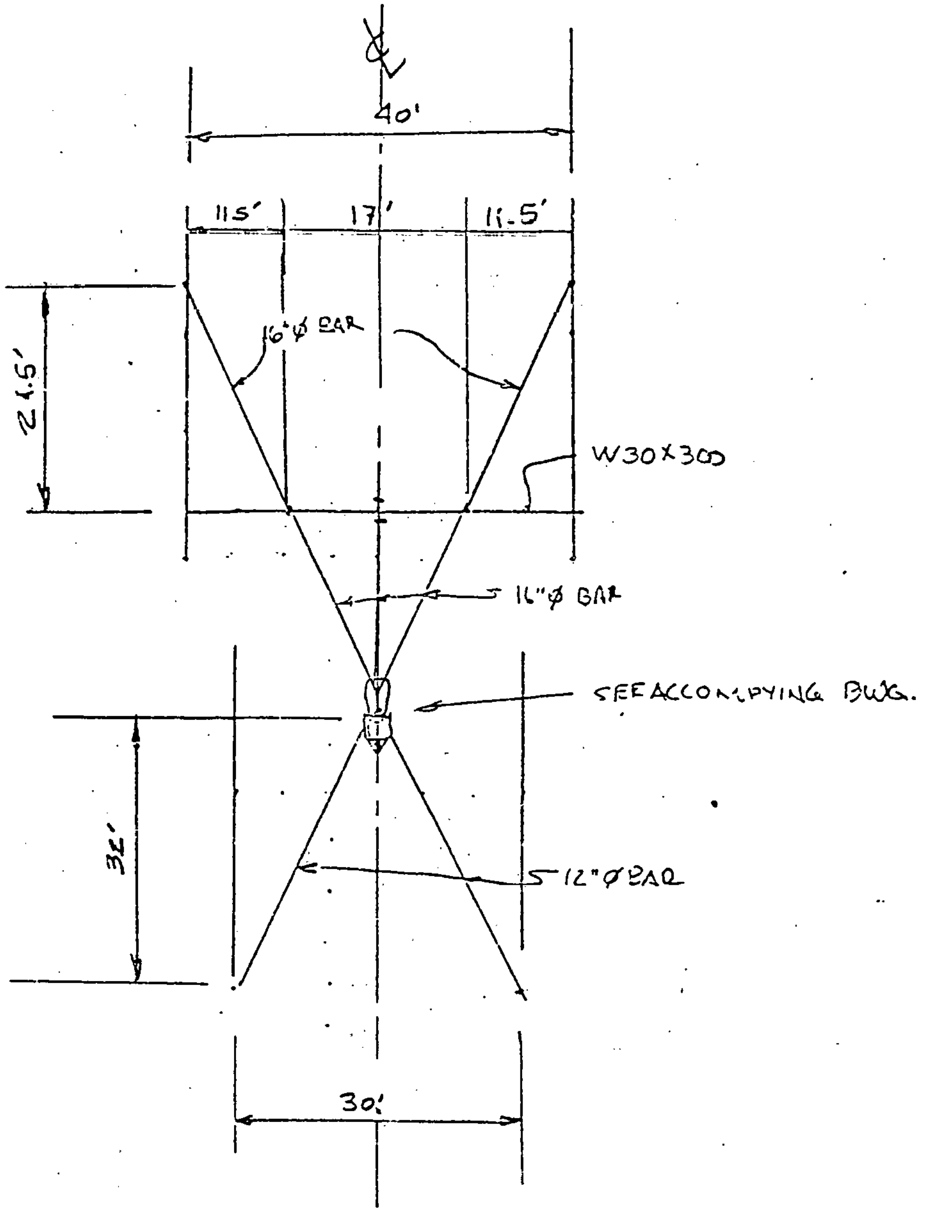

THC

8-1-79

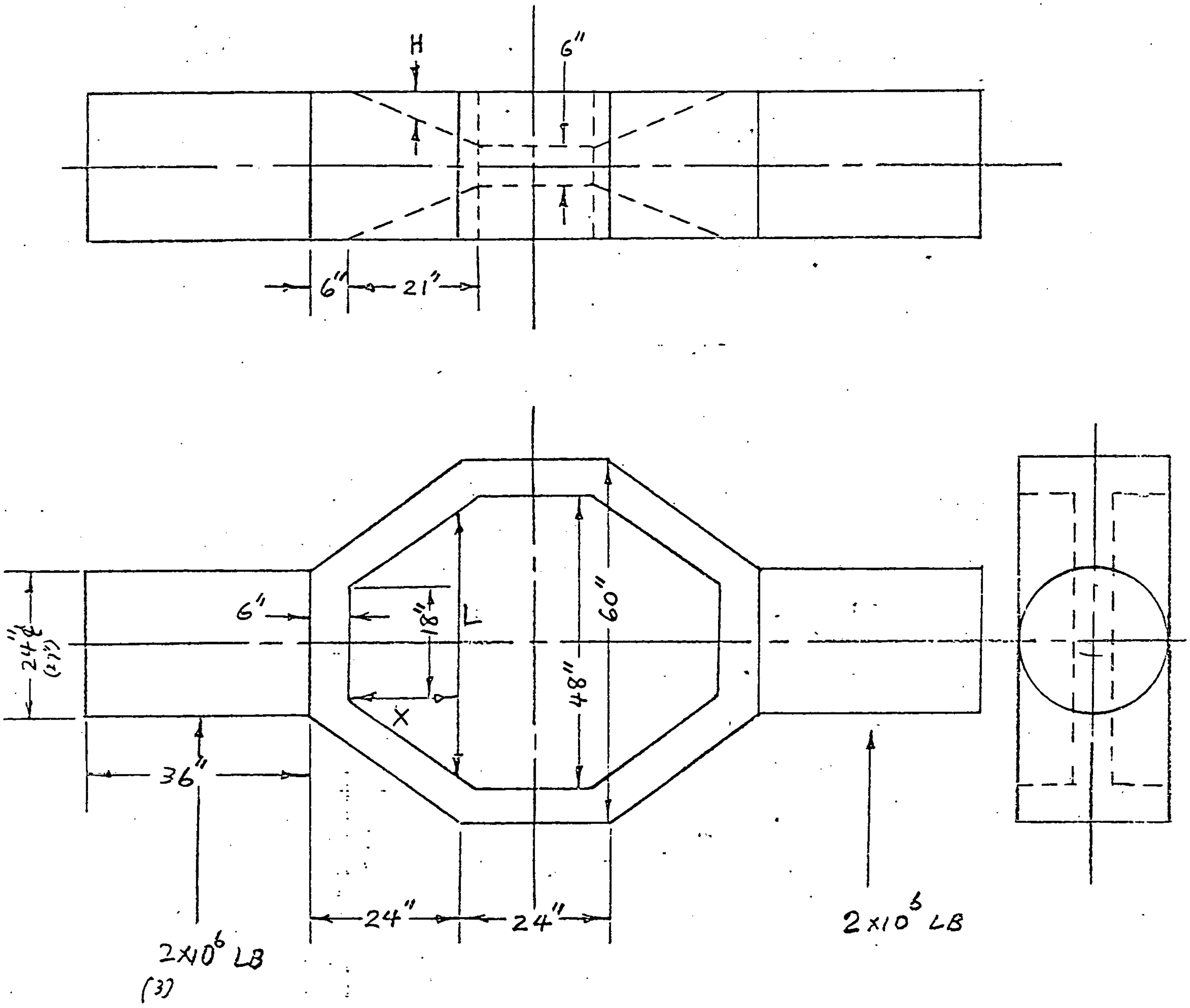

YOKE PIN FORGING 2 eq

MATL 4330 WITH INCONEL 625 CLADDING

THC

8-1-79

NORMAL STRESS OF PIN IN BENDING AT BLOCK

$$M = 18 \times \overset{3}{2} \times 10^6 = \overset{54}{36} \times 10^6 \text{ IN-LB}$$

$$I = \frac{\pi(\overset{27}{24})^4}{64} = \underset{26087}{16286} \text{ IN}^4$$

$$Z = \frac{I}{c} = \frac{\overset{26087}{16286}}{\underset{13.5}{12}} = \underset{1932.4}{1357.2} \text{ IN}^3$$

$$\sigma = \frac{M}{Z} = \frac{\overset{54}{36} \times 10^6}{\underset{1932.4}{1357.2}} = \underset{27945}{26{,}525} \text{ PSI}$$

ASSUME A STRESS CONCENTRATION FACTOR OF 1.5

$$\sigma_{MAX} = \overset{27945}{26525} \times 1.5 = \overset{41{,}917}{39{,}788} \text{ PSI}$$

SHEAR STRESS OF PIN IN BENDING AT BLOCK

$$S_{max} = \frac{4}{3} \frac{V}{\pi R^2}$$

$V = 2 \times 10^6$ LB $R = 12$ IN.

$$S_{max} = \frac{4}{3} \frac{2 \times 10^6}{\pi \times (12)^2} = 5895 \text{ PSI}$$

THC

8-1-79

SHEAR STRESS OF PIN BLOCK IN BENDING AT CENTER

$$S_{xy_{max}} = \frac{V}{I b_1} \cdot Q$$

$V = 2{,}000{,}000$ LB $\quad h = 60$ IN $\quad h_1 = 48$ IN

$I = 266{,}112$ IN^4

$b_1 = 6$ IN $\quad b = 24$ IN.

$$Q = \frac{b}{2}\left(\frac{h^2}{4} - \frac{h_1^2}{4}\right) + \frac{b_1}{2}\left(\frac{h_1^2}{4}\right)$$

$$= \frac{24}{2}\left(\frac{(60)^2}{4} - \frac{(48)^2}{4}\right) + \frac{6}{2}\left(\frac{(48)^2}{4}\right)$$

$$= 3888 + 1728 = 5616 \text{ IN}^3$$

$$S_{xy\,max} = \frac{2 \times 10^6 \times 5616}{266112 \times 6} = 7035 \text{ PSI}$$

THC

8-1-79

NORMAL STRESS OF PIN BLOCK IN BENDING AT CENTER

$$M = 54 \times 10^6 = 108 \times 10^6 \text{ IN-LB}$$

$$I = \frac{6(48)^3}{12} + 2\left[\frac{24(6)^3}{12} + (6)(24)(27)^2\right] = 266{,}112 \text{ IN}^4$$

$$Z = \frac{I}{c} = \frac{266{,}112}{30} = 8870.4 \text{ IN}^3$$

$$\sigma_{max} = \frac{M}{Z} = \frac{108 \times 10^6}{8870.4} = 12{,}175 \text{ PSI}$$

SINCE THE PIN BLOCK CENTER IS SUBJECT TO BIAXIAL STRESS: TENSION IN ONE DIRECTION AND COMPRESSION IN THE OTHER, THE COMBINED STRESS IS

$$\sigma_{critical} = \sqrt{\sigma_x^2 - \sigma_x \sigma_y + \sigma_y^2 + 3\,\tau_{xy}}$$

P. 2.11-5, "Design of Welded Structures"

$\tau_{xy} = 0$, $\sigma_x = 12{,}175$ PSI, $\sigma_y = -12{,}175$ PSI

$$\sigma_{critical} = \sqrt{3(12{,}175)^2} = 1.732 \times (12{,}175)$$

$$= 21088 \text{ PSI}$$ O.K.

$L = 18 + \frac{10}{7}x$ $\qquad\qquad x =$

$H = \frac{3}{7}x$

$$v = \int_0^{21} LH\,dx = \int_2^{21}\left(18 + \frac{10}{7}x\right)\frac{3x}{7}\,dx$$

$$= \int_0^{21}\left(\frac{54}{7}x + \frac{30x^2}{49}\right)dx$$

$$= \left[\frac{27}{7}x^2 + \frac{10}{49}x^3\right]_0^{21}$$

$$= \frac{27}{7}\left\{(21)^2\right\} + \frac{10}{49}(21)^3$$

$$= (21)^2\left(\frac{27}{7} + \frac{10}{49} \times 21\right)$$

$$= (21)^2\left(\frac{27}{7} + \frac{30}{7}\right) = (21)^2\left(\frac{57}{7}\right) = 3591$$

WEIGHT OF PIN ASSEMBLY

WEIGHT OF 2 24"ϕ × 36" PINS

$$W_p = \rho \frac{\pi}{4} D^2 \times L \times 2$$

$$\rho = 0.29 \text{ LB/IN}^3$$

$$D = \underset{27}{24} \text{ IN} \qquad L = 36 \text{ IN}$$

$$W_p = 0.29 \times \frac{\pi}{4} \times (\overset{27}{24})^2 \times 36 \times 2 = \overset{11955}{9446} \text{ LB}$$

WEIGHT OF CENTER BLOCK

$$\text{VOLUME} \quad V_c = 24 \times \left(2 \times \frac{24+60}{2} \times 24 + 24 \times 60\right)$$

$$- 4 \times 3591^{*} - 2 \times 48 \times 18 \times 9$$

$$= 82944 - 14{,}364 - 15{,}552$$

$$= 53028 \text{ IN}^3$$

* SEE INTEGRATION ON NEXT PAGE

WEIGHT OF CENTER BLOCK

$$W_B = 0.29 \times 53028 = 15378 \text{ LB}$$

WEIGHT PER PIN ASSEMBLY

$$W = W_p + W_B = 9446 + 15378 = \overset{27333}{24824} \text{ LB}$$

TOTAL WEIGHT OF PIN ASSEMBLY

$$W_{TOTAL} = 2W = 2 \times \overset{27333}{24824} = \overset{54666}{49648} \text{ LB}$$

P.V. of Sperical bearing.

± 10° OPERATIONAL
± 25° MAX.

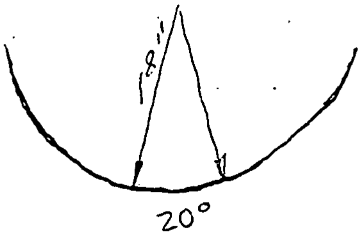

PV = P_B × V IN FT/MIN

V = 1,5 cycles/min =

$V_{10°} = \frac{\pi}{180°} r\alpha \cdot 2 \cdot 1.5 = \frac{\pi}{180} \cdot 1.5\,ft \cdot 20° \cdot 2 \cdot 1.5 = 1.57$

$V_{10°}$ = 1.57 FT/MIN

$PV_{20°}$ = 2000 · 1,5 = 3.000

$V_{25°} = \frac{\pi}{180} \cdot 1.5 \cdot 50° \cdot 2 \cdot 1.5 = 3.92$ ft/min

PV_{25} = 2000 psi · 4 = 8000

3000 PSI MFG RECOMMENDED P_B

$PV_{10°}$ @ 3000 PSI = 4,500

$PV_{25°}$ @ 3000 PSI = 12,000

DMG

MARKS Pg 3-43

P-LOAD 4,000K ÷ 2 = 2,000K

p-PSI Recomended 3KPSI:

$p = P/dl$ d = dia shaft l = length of journal

$$3KSI = \frac{2,000,000}{24'' \times l} =$$

$l = 27.8$

JOINT STIFFNESS

$M = f_1 P_r$ f_1 = COEF. FRICTION

$M = .1 \cdot 2,000K \cdot 1'$

$M = 200K$ ft lb

1.5 cyles/min

75°/min

.48 RPM

[illegible]
1979

CALCULATION OF MAXIMUM BEARING PRESSURE

BEARING LOAD : 3,000,000 LB TOTAL

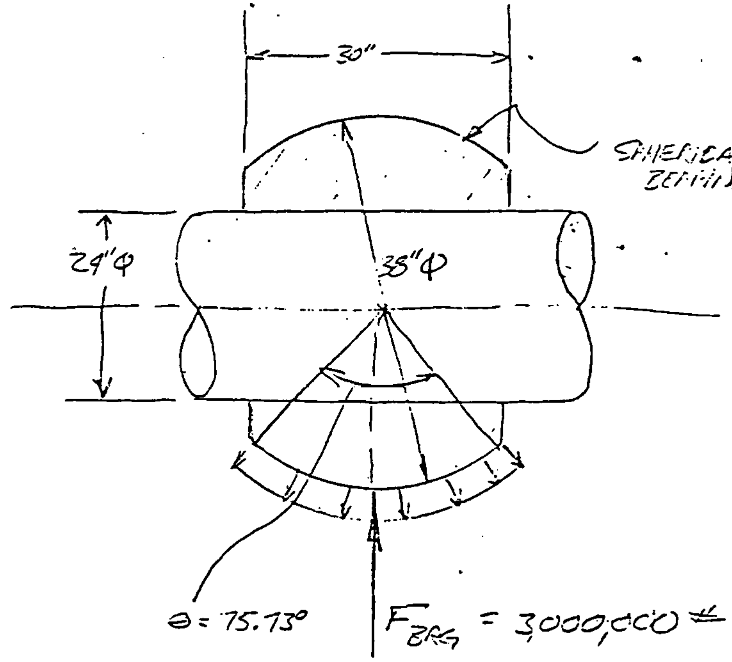

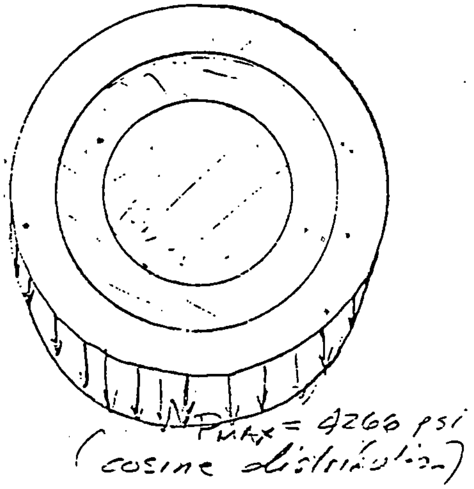

$$\cos\theta = \frac{30^2 - 2r^2}{2r^2}$$

Spherical Bearing

reference:
GMDI RPT-4086-CT54, APPENDI

ASSUMED LOAD : 3000 K#

Determine bearing pressure over width of bearing assuming a cosine distribution.

$$W_{MAX} = \frac{2P}{\pi R} = \frac{2(3000{,}000)}{\pi(38/2)} = 100{,}520 \text{ \#/in}$$

$$\underset{\text{AT SURFACE OF SPHERE}}{P_{MAX}} = \frac{2W_{MAX}}{\pi R} = \frac{2(100{,}520 \text{ \#/in})}{\pi(30''/2)} = \underline{4266.2 \text{ psi}}$$

(NOT CRITICAL)

for F_{BRG} = 2,000,000 # $\boxed{P_{MAX} = 2844 \text{ psi}}$

APPENDIX B

LITTON-MERRIMAN CATALOG
& CHART

7

LUBRITE®

technical

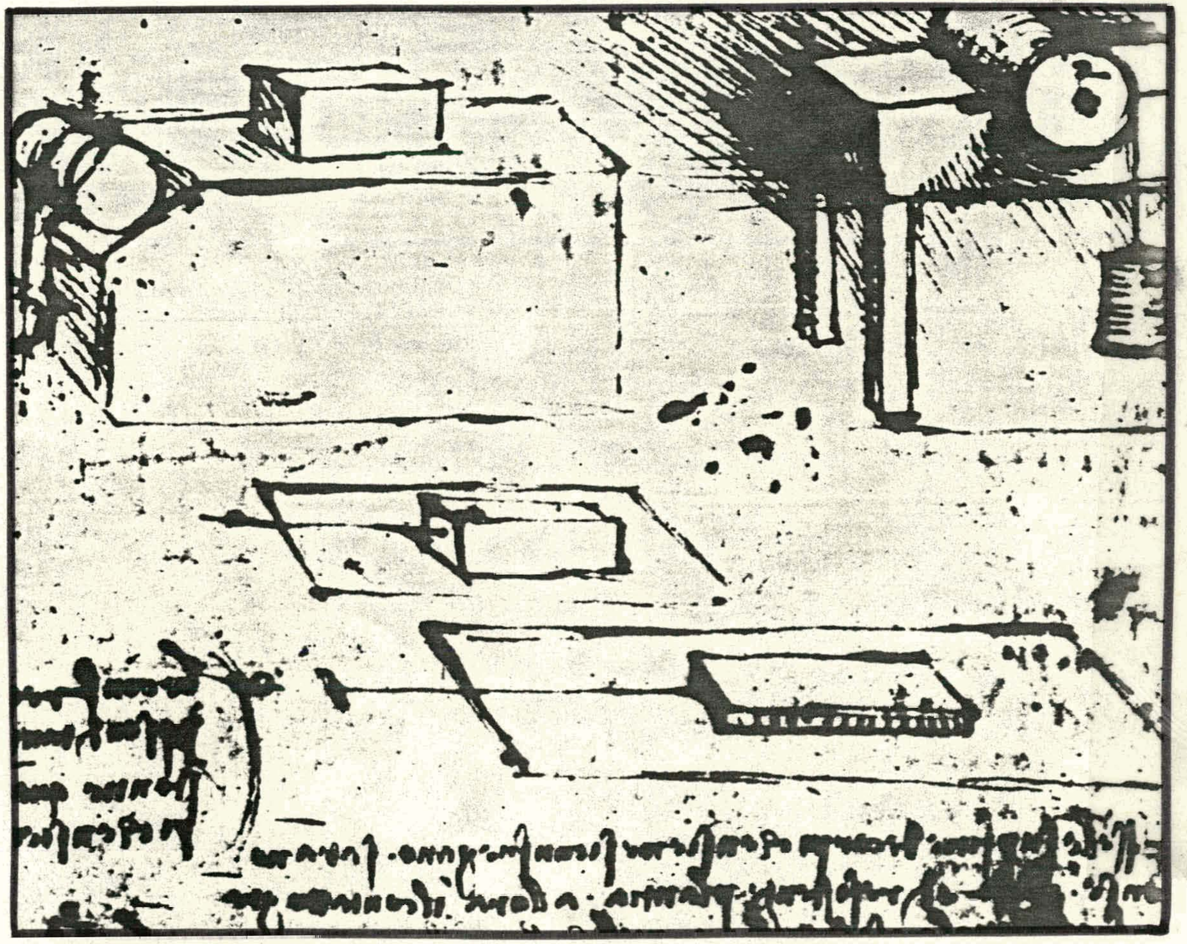

F-35

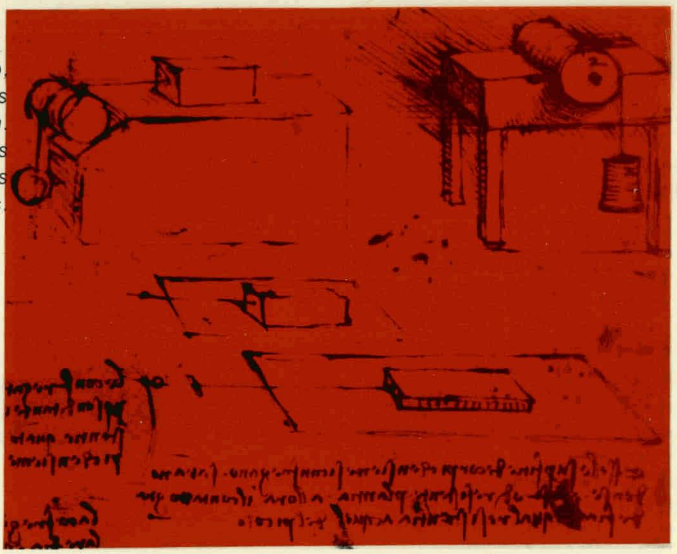

Five hundred years ago,
Leonardo DaVinci designed these devices
to measure sliding and rotating friction.
His anticipation of bearing problems
and the conception of numerous pertinent applications
are examples of his seemingly limitless genius.

dimensioning

Outside Diameter

The correct method for determining the outside diameter of a bushing is to add twice the recommended wall thickness to the specified inside diameter, rounding out the total to a figure compatible with containment restrictions.

Inside Diameter

The nominal inside diameter of a bushing is, of course, dependent upon the shaft diameter. Bushings with the smallest diameter, consistent with shaft strength and rigidity, offer the highest mechanical efficiency. Where bearing loads require additional bearing area, increase bearing length rather than diameter for minimum frictional resistance and loss of power.

Length

In most cases, a length-to-diameter ratio (L/D) of about 1.0 to 3.5 results in the most efficient performance. While shorter bushings are generally preferred from the standpoint of reduced flow, space, and friction, longer bearings operate with less eccentricity and maintain a heavier lubricating film, resulting in longer life.

Wall Thickness

Lubrite sleeve bearings are normally contained within a housing. Wall thickness criteria must provide that the bearing, when installed in its housing, support the imposed load without elastic or thermal distortion which could alter the bearing geometry.

Thin wall bearings should be avoided as they may impede heat transfer during bearing operation, reduce lubrication retention, and increase susceptibility to thermal growth and mechanical distortion during machining. Heavy wall bearings are recommended if severe wear of the bearing is permissible and expected.

Large temperature variations and different coefficients of thermal expansion in the bearing, shaft and housing material combine to produce distortions that make bearing dimensions and fits difficult to maintain. A varying clearance within the bearing can result.

The chart which follows,indicates the range of wall thicknesses proven suitable for Lubrite bearings of the corresponding inside diameters. These dimensions lie within the recommendation of the Cast Bronze Bearing Institute.

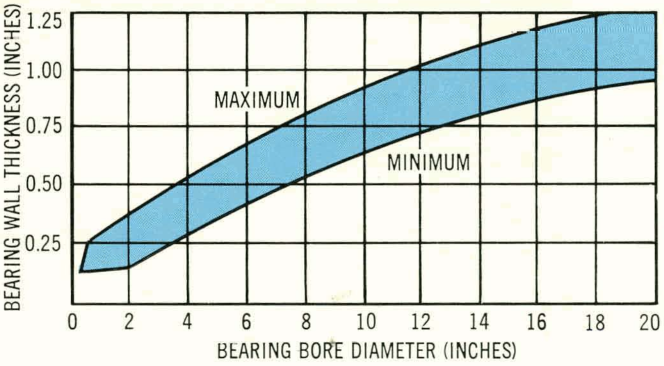

Flange and Washer Thickness

Bushing flanges and thrust and expansion washers usually require the same dimensions as bearing walls. The Wall Thickness Chart should be consulted for correct flange and washer thickness.

Lubricating Pattern

The recesses for the Lubrite lubricants may be round or trepanned holes, cast or machined into the metal substrate. The size, shape, and geometric location of the recesses will be determined by the size, shape of the bearing, and operational parameters to which it is subjected. Plate type configurations (flat, Radialube, Spherilubes) will have blind recesses on all lubricated surfaces. Thrust or expansion washers may have recesses on one or both faces or through holes as required. Basic patterns for sleave type bearings and their limitations are shown below, but other patterns can be supplied for unusual conditions.

Pattern A

Standard lubricating pattern for general and heavy duty rotary motion. Not limited by bearing size but generally not the most economical for larger diameters (over 10 inches). Requires press fit for adequate housing support. For linear motion specify Pattern C.

Pattern B

Internal lubricating pattern for extreme heavy duty rotary motion. Restricted to bearings over 4 inch inside diameter. For linear motion specify Pattern D.

lubricants

No single lubricant fulfills all service conditions. Each has brackets of operating conditions under which it supplies maximum lubricity, greatest durability and lowest coefficient of friction. New lubricating materials are constantly under development in Merriman's own research facilities. These, along with the most advanced lubricating materials produced by industry, are incorporated into Lubrite formulations when improved performance can be demonstrated.

The following chart describes the characteristics of the more widely used lubricants. Other uniquely formulated lubricants are available for unusual applications.

TYPE OF LUBRICANT	APPLICATION
G1	General Duty. Temperature from minus 100 to 250°F. Atmospheric exposure. Mild contaminants.
G2	Temperature from minus 100 to 500°F. Occasional contamination from petroleum base products and mild solvents.
G3	Temperature from minus 100 to 500°F. Compatible with petroleum base products and most solvents.
G4	Temperature from minus 100 to 350°F. Will not promote electrolysis in salt water and other corrosive media.
G5	Temperature from minus 100 to 350°F. Will not react with most acids bases, etc. Best performance in reciprocating motion.
G10	Temperature from minus 100°F to 350°F. Epoxy base graphite-free lubricant. Less prone to attack by most acids, bases and petroleum-based products.
T1	Temperature 250 to 550°F. Oil and grease resistant.
T2	Temperature 550 to 1,000°F.
T3	Temperature 1,000 to 1,500°F.
AE1	Temperature 100 to 300°F. Subject to high intensity radiation.
AE5	Temperature 250 to 550°F. Subject to high intensity radiation.
AE6	Temperature 550 to 1,000°F. Subject to high intensity radiation.

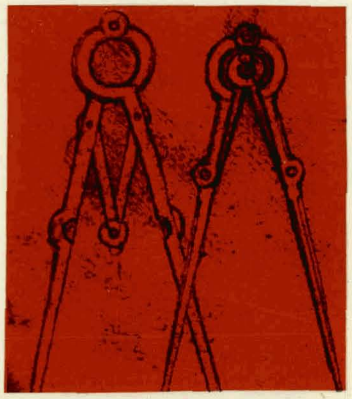

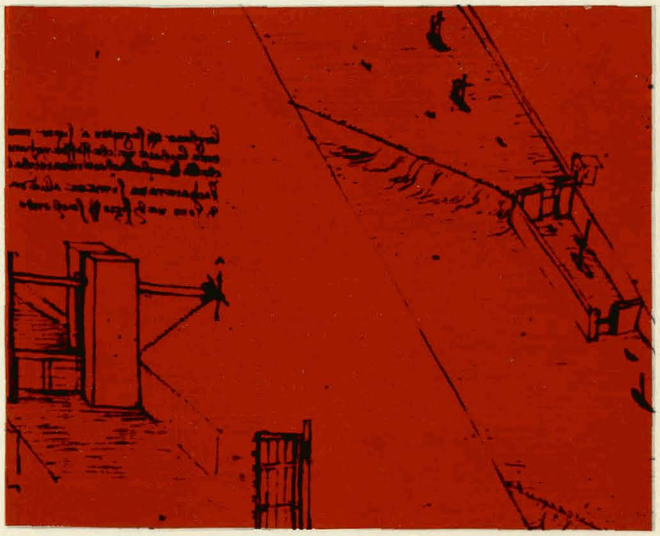

coefficient of friction

Lubrite specified for usage within the recommended PV range will function at a coefficient of friction between 0.03 and 0.09, depending on the lubricant and operating parameters of the bearing. *A maximum design coefficient of 0.10 should therefore be considered* unless field service substantiates lower values. For high temperature service, a design coefficient of 0.15 is suggested.

Applications necessitating lower design coefficients can often be satisfied with the special efforts of our Engineering Department.

alloys

Loads and Speeds

As Lubrite operates at a fixed design coefficient of friction, the variables of bearing pressure and sliding velocity are the concern of the design engineer. Bearing pressure P (total load/projected area) and sliding velocity V (surface feet per minute) are combined as PV, an indicator of heat generation.

The tolerable PV values for various base metals in combination with Lubrite have been determined experimentally. Accuracy in prediction of solid bearing performance is notably low compared to that of rolling element bearings, and past experience and performance must be heavily relied upon.

Although PV values above those recommended in the accompanying chart have been successfully used, caution should always be exercised in the application of these recommendations to a specific project. Allow our Engineering Department to discuss with you all of the parameters of your bearing application and assist you in determining accurate PV values for its operation.

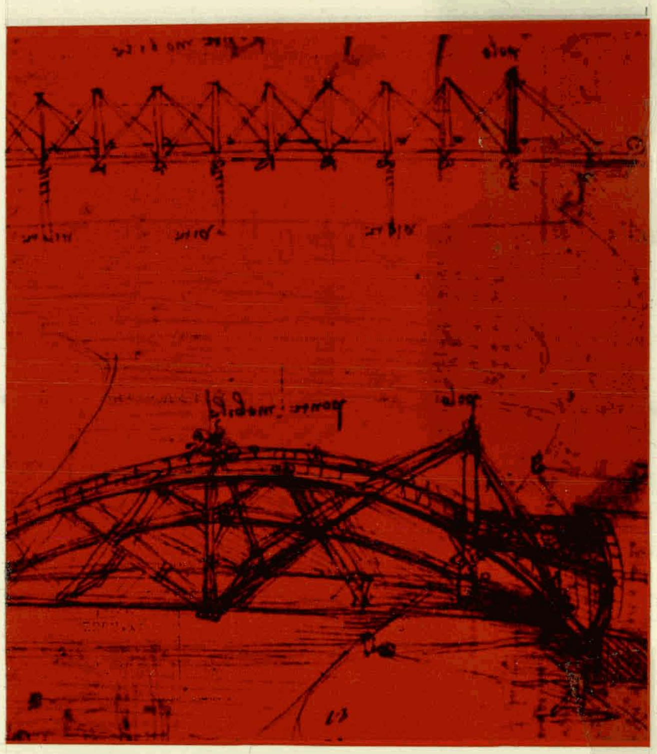

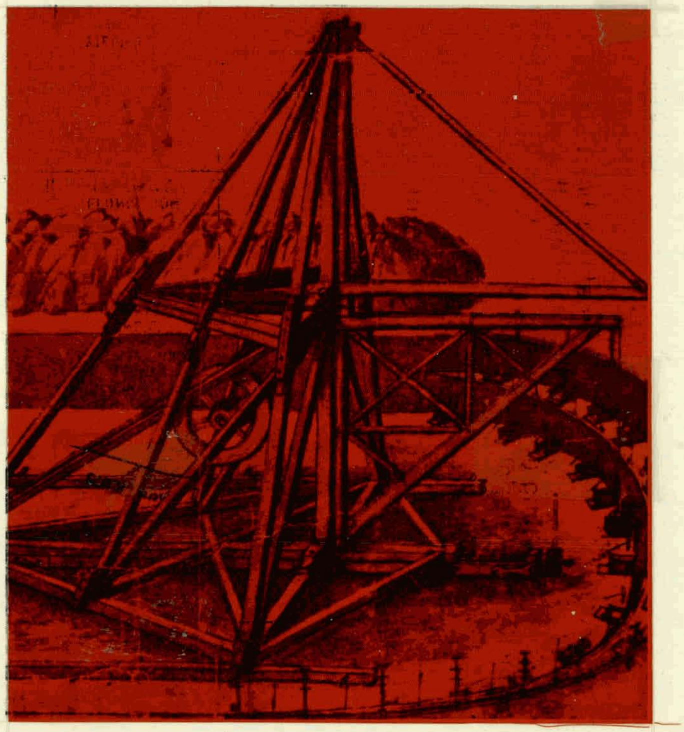

Material Selection

Ideally, the bearing and its opposing surface should always be separated by a film of lubricant. However, over a period of use, specified conditions may vary through contamination or elastic or thermal distortion resulting in some mating surface contact.

Normally, bronze is used as the base material for Lubrite bearings. However, some applications with extreme temperatures, environments corrosive to bronze, and loadings exceeding the compressive strength of bronze will require the physical and chemical characteristics found in other materials. Successful metals for bases range from stainless steel and nodular iron, to tool steels such as Graph-Air and Vascomax. Considered bearing material and lubricant selection is therefore important to long bearing life and maintenance-free operation.

Materials Chart Explanation

The bearings' characteristics (defined below) are weighted by a 1-5 classification with the lower numbers equalling the preferred properties relative to the other materials listed.

Compatibility

A measure of the anti-weld and anti-scoring characteristics.

Deformability

The ability to compensate for geometric errors and the ability to absorb foreign particles to avoid scoring and wear.

Fatigue Resistance

The ability to withstand load changes relative to magnitude and directional change as found in oscillating and reciprocating motion.

Bearing Material Evaluation Criteria

LUBRITE ALLOY NO.	C.D.A. NUMBER A	MAXIMUM RECOMMENDED VALUES UP TO 250°F			TYPICAL VALUES				MINIMUM VALUES PER ASTM				BRINELL HARDNESS NUMBER		MAXIMUM OPERATING TEMPERATURE (°F)	COEFFICIENT OF THERMAL EXPANSION (IN/IN/°F) 10	COMPATIBILITY	DEFORMABILITY	FATIGUE RESISTANCE	CORROSION RESISTANCE	COST FACTOR	ASTM SPECIFICATION	GENERIC DESIGNATION
		LOAD (P.S.I.)	SPEED (S.F.M.)	F P.V.	COMPRESSIVE STRENGTH .001 SET (K.S.I.)	TENSILE STRENGTH (K.S.I.)	YIELD POINT (K.S.I.)	ELONGATION (% IN 2")	COMPRESSIVE STRENGTH .001 SET (K.S.I.)	TENSILE STRENGTH (K.S.I.)	YIELD POINT (K.S.I.)	ELONGATION (% IN 2")	500 Kg LOAD	3000 Kg LOAD									
115	836	750	100	15,000	15	35	15	25	—	30	14	20	60	—	400	10.1	1	1	5	3	1	B145-836	LEADED RED BRASS
194	913	C 3000	50	30,000	24	45	—	1	24	—	—	—	(138)	160	250		2	5	4	3	5	B22-913	HI TIN BRONZE
196	911	C D 2500	50	30,000	18	30	—	1	18	—	—	—	80	—	250		1	2	2	2	3	B22-911	HI TIN BRONZE
225	903	1500	100	30,000	13	45	20	25	—	40	18	20	65	—	500	10.0	2	4	1	3	2	B143-903	G BRONZE TIN BRONZE
B 237	905	2000	250	30,000	15	45	22	25	—	40	18	20	75	—	550	10.0	1	2	2	2	2	B22-905 B143-905	LEADED BRONZE
305	937	C 1000	250	30,000	17	35	18	20	—	25	12	8	65	—	450	10.3	1	2	3	1	1	B22-937 B144-937	HI LEADED TIN BRONZE
315	932	1000	250	20,000	14	35	18	20	—	30	14	12	60	—	450	10.0	1	2	4	3	1	B144-932	LEADED TIN BRONZE
326	935	1000	250	20,000	13	31	16	20	—	25	12	8	60	—	350	10.0	1	3	2	3	3	B144-935	LEADED TIN BRONZE
417	954	2500	100	50,000	22	90	35	17	—	75	30	12	(130)	150	600	9.0	5	5	3	1	5	B148-954	ALUMINUM BRONZE
418	955	3000	100	50,000	30	100	43	8	—	90	40	6	(163)	190	600	8.5	5	5	3	1	5	B148-955	ALUMINUM BRONZE
421	865	4000	25	50,000	24	70	26	25	—	65	25	20	(114)	130	450	10.7	4	5	2	2	1	B147-865	MANGANESE BRONZE
423	862	8000	25	70,000	50	95	47	20	—	90	45	18	(154)	180	800	11.0	4	5	2	4	4	B147-862	MANGANESE BRONZE
424	863	C 8000	25	70.000	70	118	71	16	55	110	60	12	(185)	223	800	11.9	4	5	2	5	4	B22-863 B147-863	MANGANESE BRONZE

A COPPER DEVELOPMENT ASSOCIATION — Accepted alloy designation in North America — Used by U.S. Government, ASTM, SAE and others
B Modified with up to 2½% Pb allowed
C ASTM recommendation
D AASHO recommendation for bridge bearings
E Typical value for range of 0° to 500°F
Converted value

F The physical strength of bronze sharply reduces at elevated temperatures.
See paragraph "High Temperature Applications" for applications exceeding 250°F.
The PV ratings, loads, and speeds listed must be reduced as temperature is increased.

Corrosion Resistance

The relative ability to resist corrosion caused from atmospheric conditions, uninhibited lubricants, and other normal industrial contaminants.

Cost Factor

The relative total cost comparison of completed bearings from materials listed.

The table below describes briefly the more frequently used bearing materials, with relative ratings of some of their more pertinent characteristics.

clearances

Lubrite bearings are supplied completely finished with proper clearance and tolerances, ready for installation. Boring, reaming or other operations prior to or after assembly are not necessary and should be avoided as they may impair the operating efficiency and service life.

Diametral allowance or operating clearance is the amount (in thousandths of an inch) by which the inside diameter of a bearing exceeds the journal diameter. Diametral clearance is an essential consideration in any bearing design and the selection of the correct clearance is significant in the success of the bearing. Lubrite lubricants coat the interfaces with thick film lubrication. Therefore, for a running fit, greater clearance is required with Lubrite bearings than with thin film, oil or grease type bearings. This greater clearance does not indicate a looseness. The Lubrite lubricant coats the journal and bearing wall and partially fills the clearance, thereby providing the assembly with a satisfactory operating fit.

Clearance must of necessity vary with the operating conditions. Factors such has speed, load, temperature, size, and type of application must be considered. The following graph will serve as a guide in the selection of correct clearances for the majority of applications. For special or unusual conditions, our Engineering Department will be pleased to make recommendations.

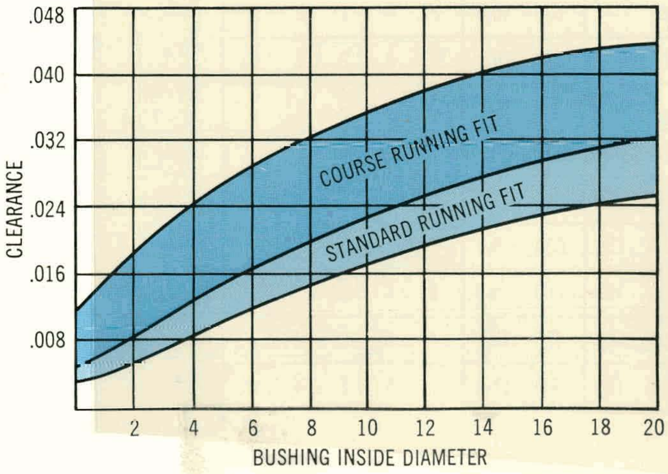

surface finish

Bearing and journal peak surface variations should be less than the expected minimum film thickness: otherwise, peaks on the journal surface contact peaks of the bearing surface, with resulting high friction and accelerated wear. Since the journal is generally harder and has a higher shear value than the bearing material, the surface finish should be smoother than that of the bearing. In slow moving and static conditions the Lubrite film remains thicker than in higher-speed applications, and does not require finishes better than 63-125 rms. In general, smoother finishes are required for the harder materials, for high loads, and for higher surface velocities.

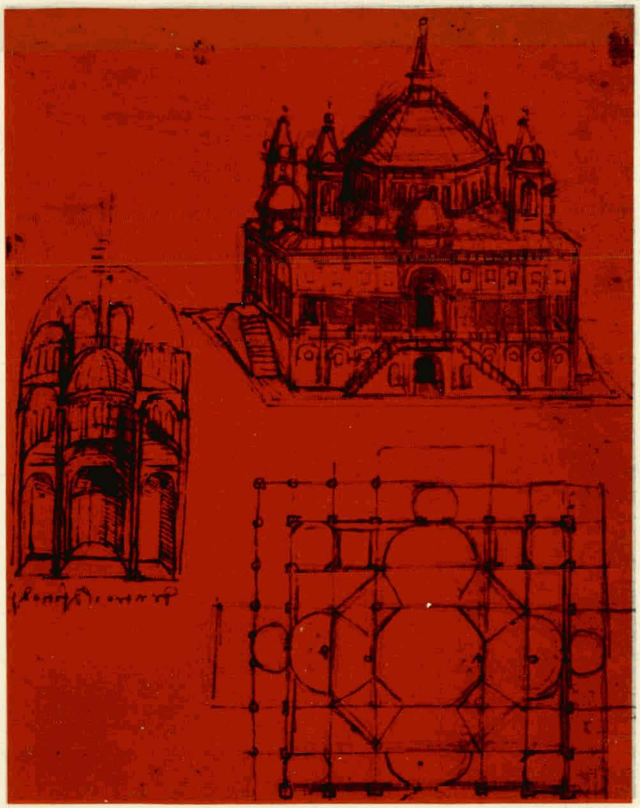

LUBRITE ALLOY NO.
115
194
196
225
B 237
305
315
326
417
418
421
423
424

A COP
B Modi
C AST
D AAS
E Typic
Conv

methods of retaining bearings

Several different methods may be used to insure that a Lubrite bearing is retained firmly in the housing. The best method will depend on the particular application and the unit should always be designed to lend itself to convenient replacement if necessary.

The most common and satisfactory method is to press the bearing into the housing with an interference fit. Shrink fits are not normally recommended and should only be considered when a press fit is not feasible. Please consult our Engineering Department before attempting a shrink fit, as the method may loosen or destroy the lubricant.

Fits recommended for general applications are listed below and comply with the Bronze Bearing Institute standards.

Recommended Tolerances for Nominal Housing Bores Using Press Fits

NOMINAL BEARING OD AND HOUSING ID (in.)	TOLERANCE ON NOMINAL BEARING OD (in.)	TOLERANCE ON NOMINAL HOUSING ID (in.)	RANGE OF INTERFERENCE FIT (in.)	AVERAGE INTERFERENCE FIT (in.)
0 to 0.5	+0.002 to +0.003	+0.0015 to +0.0020	zero to 0.0015	0.00075
0.5 to 1	+0.002 to +0.003	+0.0010 to +0.0015	0.0005 to 0.0020	0.00125
1 to 1.5	+0.002 to +0.003	+0.0005 to +0.0010	0.0010 to 0.0025	0.00175
1.5 to 2	+0.002 to +0.003	+0.0000 to +0.0010	0.0010 to 0.0030	0.0020
2 to 2.5	+0.002 to +0.003	+0.0000 to +0.0010	0.0010 to 0.0030	0.0020
2.5 to 3	+0.002 to +0.003	−0.0005 to +0.0005	0.0015 to 0.0035	0.0025
3 to 4	+0.003 to +0.005	+0.0005 to +0.0015	0.0015 to 0.0045	0.0030
4 to 5	+0.003 to +0.005	+0.0000 to +0.0010	0.0020 to 0.0050	0.0035
5 to 6	+0.003 to +0.005	−0.0005 to +0.0005	0.0025 to 0.0055	0.0040
6 to 8	+0.003 to +0.005	−0.0010 to +0.0000	0.0030 to 0.0060	0.0045

For high temperature applications, and when thin wall housings are required, the fits must be adjusted to avoid yielding of the bearing material or housing.

When a Lubrite bearing is pressed into the housing, the driving force should be uniformly applied to the end of the bearing to avoid upsetting of the bearing. Lubrite bearings are provided with a chamfer on the O.D. to help facilitate alignment and to permit the "rounding out" of any ovality in the bearing. Due to the turning, drilling and high hydraulic pressures required in the manufacture of the Lubrite bearing, some ovality will be present but should not be of concern, as the bearing will conform to the roundness of its housing when in position.

Press fitting sleave bearings larger than 8 inch outside diameter can cause difficulty in assembly and bearing distortion. As a result of a press fit, the bore of the bearing will "close in" resulting in an inside diameter smaller than that originally machined. In general, it is best to allow 100% of the interference fit for closure. Due to the variations in metals, wall thickness, and recess pattern, it is extremely difficult to predict the actual closure with any degree of accuracy.

Other methods of bearing retention, noted below, may be employed but as Lubrite bearings should NOT be machined after assembly, care must be taken to prevent any distortion or deformation caused by the keying methods.

1. Set screws
2. Woodruff keys
3. Bolted bearing flanges
4. Threaded bearing O.D.
5. Dowel pins
6. Housing caps.

Bearing and Journal Hardness

Even in well-lubricated, full film sleeve bearings, momentary contact between journal and bearing may occur under such conditions as starting, stopping, or overloading. In Lubrite bearings which are mixed film and/or boundary-film lubricated (depending on the type of lubricant and the temperature) sporadic metal-to-metal contact occurs. This contact is drastically reduced once the Lubrite lubricant is burnished into the asperities of the bearing and journal. In order to allow for this necessary burnishing and wearing-in the journal should, in general, be made harder than the bearing material. This practice allows the effects of scoring or wearing to be inflicted on the more easily replaced bearing rather than the frequently more expensive journal. For the best wear characteristics, it is recommended that the journal be *at least* 100 points harder in Brinell than the bearing material.

In general, the harder the bearing materials, the more local heat will be generated if and when the journal touches the shaft. Abrasive materials, which are allowed to enter the bearing, will not be as readily imbedded into hard materials as in softer alloys, and so more care must be taken to maintain cleanliness. However, the cleaner the conditions for any material, the better the performance and life.

Materials which have inherent bearing qualities and maintain their physical strengths at high temperatures can, in general, be readily adapted to high temperature bearing systems.

High Temperature Applications

With correct design and material selection, Lubrite can provide boundary lubrication and prevent seizing and galling at temperatures up to 1500°F. However, applications in temperature environments of over 250°F. require critical engineering.

Bearing materials have drastically altered creep rates and strengths at elevated temperatures, and differences in thermal expansion of the bearing, housing and journal must be calculated to prevent shaft seizures. Even relatively minor inaccuracies could cause cracks or small geometric changes resulting in decreased bearing life and ultimate failure.

Refinement in surface finishes of both the Lubrite bearing and the opposing face becomes more critical as temperatures increase. It is important that our Engineering Department advise on all high temperature bearing usages.

7 technical

LUBRITE®

Litton MERRIMAN

100 IND A K ROAD • HINGHAM, MASSACHUSETTS 02043 • (617) 749-5100

Permission to reprint this
copyrighted article granted by
Merriman, Inc.

MERRIMAN
Litton

100 Industrial Park Road
Hingham, MA 02043

LUBRITE LABORATORY TEST DATA
G10 LUBRICANT SLIDE TEST

Test No. S75-45C
Sheet 1 of 1

Customer: MERRIMAN

B/A NO.	DATE	BRG. PRESS. (K.S.I.)	VERT. PRESS. (P.S.I.G.)	HOR. PRESS. (P.S.I.G.)	* μ	μ AV.	SPEED (IN./MIN.)	STROKE (IN.)	CYCLES	TEMP. (° F.)	REMARKS
1	9-30	5.0	1415	336	.030	INITIAL	—	.304	(0) 0	71	
2	9-30	5.0	1415	340	.030		3.50	.304	(1000) 1000	74	
3	9-30	5.0	1415	350	.030		3.35	.304	(1500) 500	75	
4	10-6	5.0	1415	360	.032		3.40	.304	(10,000) 8500	78	
5	10-16	5.0	1415	446	.039		3.65	.304	(30,000) 20,000	76	
6	10-27	5.0	1415	552	.049		3.55	.304	(55,000) 25,000	77	
7	12-3	5.0	1415	640	.057		3.45	.304	(90,000) 35,000	78	
8	12-19	5.0	1415	660	.059		3.71	.304	(120,000) 30,000	82	
9	1-9	5.0	1415	660	.059		3.65	.304	(150,000) 30,000	86	
10	2-9	5.0	1415	665	.059		3.50	.304	(175,000) 25,000	88	
11	2-23	5.0	1415	660	.059		3.45	.304	(200,000) 25,000	92	TEST ENDED John Williams
12	3-24	5.0	1415	660	.059		3.75	.304	(250,000) 50,000	96	3-24-76

Plate/Bushing Substrate Mat'l: ASTM B148-955 Mating Surface Mat'l: 316 ST. STL. Finish: 20 RMS

*For #3-100, μ = (Hor. Press x Press Factor .000358)/No. of Lubricant Surfaces 4

For #3-58 & 3-141, μ = (Hor. Press/Vert. Press) x (Press Factor ____) /No. of Lubricant Surfaces ____

M.I. 263

F-43

To 90%

APPROVED FOR RELEASE
LUBRITE LABORATORY

MAY 09 1980

By:

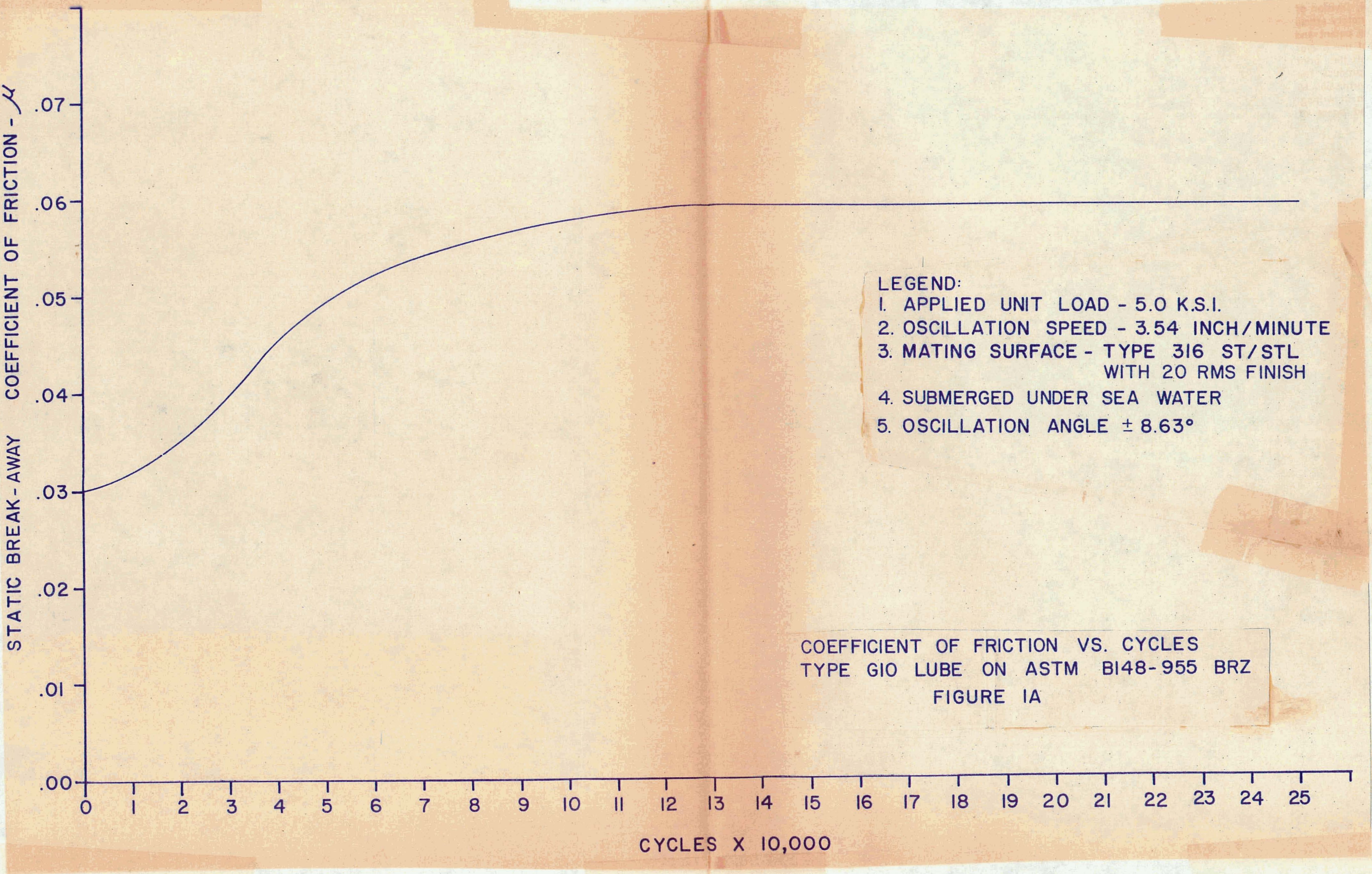

COEFFICIENT OF FRICTION VS. CYCLES
TYPE G10 LUBE ON ASTM B148-955 BRZ
FIGURE 1A

70%

APPENDIX C

MATERIAL SPECIFICATIONS

COPPER ALLOY No. C95800

Names formerly used (not recommended): 415, Alpha Nickel Aluminum Bronze, 81-5-4-9-1

Composition — percent

	Nominal	Minimum	Maximum
Aluminum	9	8.5	9.5
Copper(1)	81	79.0	....
Iron(2)	4	3.5	4.5
Lead	....	....	.03
Manganese	1	.8	1.5
Nickel(2)	5	4.0	5.0
Silicon	....	....	.10

Nearest Applicable Specifications

Centrifugal	ASTM B271; MIL-C-15345 (Alloy 28)
Continuous	
Die	
Ingot	ASTM B30; Ingot No. 415
Investment	
Permanent Mold	
Precision	
Sand	ASTM B148; QQ-C-390; MIL-B-24480

(1) Total Named Elements shall be 99.5% minimum.
(2) Iron content shall not exceed nickel content.

Physical Properties

	English Units	Metric Units
Melting Point (Liquidus)	1940 F	1060 C
Melting Point (Solidus)	1910 F	1043 C
Density	.276 lb./cu. in. @ 68 F	7.64 gm./cu. cm. @ 20 C
Specific Gravity	7.64	7.64
Coefficient of Thermal Expansion	.000009 per °F from 68 F to 572 F	.0000162 per °C from 20 C to 300 C
Thermal Conductivity	20.8 Btu./sq.ft./ft./hr./°F @ 68 F	.086 cal./sq. cm./cm./sec./°C @ 20 C
Electrical Conductivity*	7.1 % IACS @ 68 F	.041 Megmho-cm. @ 20 C
Specific Heat	.105 Btu./lb./°F @ 68 F	.105 cal./gm./°C @ 20 C
Modulus of Elasticity (Tension)	16,500 ksi	11,600 Kg./sq. mm

*Volume basis in as-cast condition except for precipitation hardening alloys which are in the full heat treated condition.

Typical Uses

Propeller hub, blades and other parts in contact with salt water.

Fabrication Practices

Stress Relieving Temperature— 600 F or 316 C
Time at Temperature— 1 Hour per Inch of Section Thickness
Responds to Heat Treatment— *
Solution Heat Treating Temperature— F or C
Time at Temperature— Hours per Inch of Section Thickness
Quenching Medium—
Precipitation Hardening Temperature— F or C
Time at Temperature— Hours
Quenching Medium—

Suitability for being joined by:
Soldering .... Good
Brazing .... Fair
Oxyacetylene Welding ... Not Recommended
Carbon Arc Welding .... Poor
Gas Shielded Arc Welding .... Good
Coated Metal Arc Welding .... Good
Machinability Rating
(Free Cutting Brass = 100)— 50

*Castings exposed to seawater or other aggressive environments should be temper annealed.

COPPER ALLOY No. C95800 (Continued)

Types of Casting

☒ Centrifugal
☒ Continuous
☐ Die
☐ Investment
☒ Permanent Mold
☒ Plaster
☒ Sand
☐ Other

Casting Characteristics

Effect of Section Size on Soundness and Mechanical Properties .... Small

Patternmakers Shrinkage (in./ft.)– 3/16

Drossing	High
Gassing	Medium
Fluidity	Medium
Shrinkage	High
Casting Yield	Low

Mechanical Properties

(Test Bar Values)

	AS CAST (SAND)				HEAT TREATED			
	English Units		Metric Units		English Units		Metric Units	
Property	Min.	Typ.	Min.	Typ.	Min.	Typ.	Min.	Typ.
Tensile Strength–ksi (kg/mm^2)	85.0	95	59.8	66.8	....	....	....	....
Yield Strength–ksi (kg/mm^2)								
(.5% Extension Under Load)	35.0	38	24.6	26.7	....	....	....	....
(.2% Offset)	....	....	....	....	....	....	....	....
Elongation in 2 inches (50mm)–percent	15	25	15	25	....	....	....	....
Hardness								
Rockwell	....	....	....	....	....	....	....	....
Brinell–500 kg	....	....	....	....	....	....	....	....
Brinell–3000 kg	....	159	....	159	....	....	....	....
Shear Strength–ksi (kg/mm^2)	....	58	....	40.8	....	....	....	....
Compressive Strength–ksi (kg/mm^2)								
.001 in. set/in.	....	....	....	....	....	....	....	....
.01 in. set/in.	....	....	....	....	....	....	....	....
.1 in. set/in.	....	100	....	70.3	....	....	....	....
Impact Strength–ft-lbs								
Izod	....	20	....	....	....	....	....	....
Charpy V-Notch	....	....	....	....	....	....	....	....
Proportional Limit–ksi (kg/mm^2)	....	....	....	....	....	....	....	....
Fatigue Strength (100 million cycles)–ksi (kg/mm^2)	....	31	....	21.8	....	....	....	....
Creep Strength (0.1% per 10,000 hours)–ksi (kg/mm^2)								
250F	....	....	....	....	....	....	....	....
350F	....	....	....	....	....	....	....	....
450F	....	....	....	....	....	....	....	....
500F	....	....	....	....	....	....	....	....
550F	....	....	....	....	....	....	....	....
600F	....	....	....	....	....	....	....	....
700F	....	....	....	....	....	....	....	....
800F	....	....	....	....	....	....	....	....

Meets
CDA 958

MIL-B-24480(SHIPS)
30 January 1973
SUPERSEDING
MIL-B-23921(SHIPS)
20 November 1963

MILITARY SPECIFICATION

BRONZE, NICKEL-ALUMINUM CASTINGS, FOR SEAWATER SERVICE

1. SCOPE

1.1 This specification covers a nickel-aluminum bronze casting alloy for general seawater applications, excluding propellers (see 6.2), with optimum resistance to dealloying corrosion.

2. APPLICABLE DOCUMENTS

2.1 The following documents of the issue in effect on date of invitation for bids or request for proposal, form a part of the specification to the extent specified herein.

SPECIFICATIONS

FEDERAL
PPP-B-585 - Boxes, Wood, Wirebound.
PPP-B-601 - Boxes, Wood, Cleated-Plywood.
PPP-B-621 - Boxes, Wood, Nailed and Lock-Corner.
PPP-C-650 - Crates, Wood, Open and Covered.

STANDARDS

FEDERAL
FED-STD-151 - Metals; Test Methods.

MILITARY
MIL-STD-105 - Sampling Procedures and Tables for Inspection by Attributes.
MIL-STD-129 - Marking for Shipment and Storage.
MIL-STD-248 - Welding and Brazing Procedure and Performance Qualification.
MIL-STD-278 - Fabrication Welding and Inspection; and Casting Inspection and Repair for Machinery, Piping and Pressure Vessels in Ships of the United States Navy.
MIL-STD-792 - Identification Marking Requirements for Special Purpose Components.

(Copies of specifications, standards, drawings, and publications required by suppliers in connection with specific procurement functions should be obtained from the procuring activity or as directed by the contracting officer.)

2.2 Other publications. The following documents form a part of this specification to the extent specified herein. Unless otherwise indicated, the issue in effect on date of invitation for bids or request for proposal shall apply.

UNIFORM CLASSIFICATION COMMITTEE
Uniform Freight Classification Rules.

(Application for copies should be addressed to the Uniform Classification Committee, Room 1106, 222 South Riverside Plaza, Chicago, Illinois 60606.)

NATIONAL CLASSIFICATION BOARD
National Motor Freight Classification Rules.

(Application for copies should be addressed to the National Motor Freight Traffic Association, Inc., 1616 "P" Street N.W., Washington, D.C. 20036.)

AMERICAN SOCIETY FOR TESTING AND MATERIALS (ASTM)
E8-69 - Methods of Tension Testing of Metallic Materials.

(Application for copies should be addressed to the American Society for Testing and Materials, 1916 Race Street, Philadelphia, Pennsylvania 19103.)

FSC MECA

(Technical society and technical association specifications and standards are generally available for reference from libraries. They are also distributed among technical groups and using Federal agencies.)

3. REQUIREMENTS

3.1 Chemical composition. Castings shall conform to the chemical composition specified in table I.

Table I - Chemical composition (percent).

Copper	Manganese	Nickel	Iron[1]	Aluminum	Silicon	Lead	Copper plus sum of named elements
79.0 min.	0.75-1.5 max.	4.0-5.0	3.5-4.5	8.5-9.5	0.10 max.	0.03 max.	99.50 min.

[1] Iron shall not exceed the nickel content.

3.1.1 The contractor shall furnish an analysis of each melt of castings showing the percentage of each of the named elements given in table I.

3.2 Mechanical properties. The mechanical properties of the castings shall be as specified in table II and shall be determined after temper anneal heat treatment in accordance with 3.3.

Table II - Mechanical properties.

Tensile strength, minimum (p.s.i.)	Yield strength, minimum[1] (p.s.i.)	Elongation in 2 inches, minimum (percent)
85,000	35,000	15.0

[1] At 0.5 percent extension under load.

3.3 Heat treatment. Castings shall be given a temper anneal heat treatment at 1250° ± 50° Fahrenheit (F) 6 hours minimum, followed by air cooling.

3.4 Repair of castings. Repair welding of castings shall be performed in accordance with MIL-STD-278. Welding procedure qualification, prior to production welding, shall be in conformance with MIL-STD-248.

3.4.1. Postweld heat treatment. Weld repaired castings shall be postweld heat-treated in accordance with 3.3, except as specified in 3.4.1.1. Redetermination of the mechanical properties is not required after postweld heat treatment.

3.4.1.1 Omission of postweld heat treatment. Postweld heat treatment is not required when the repair is made on the non-seawater side of the casting, provided the heat-affected zone does not extend within 1/4 inch of the seawater side. Surfaces in contact with seawater shall be identified on the casting drawing.

3.4.2 Identification of repaired areas. Repaired areas of castings shall be encircled with a ring of greaseless white paint prior to submission for final inspection.

3.5 Preproduction foundry control. When specified (see 6.1), castings shall be produced under foundry control acceptable to the procuring activity. Foundry control shall consist of the examination of castings by radiographic or other methods specified by the procuring activity until the gating, pouring, and other foundry practices have been established to produce castings meeting the quality standards agreed upon by the procuring activity and the contractor (see 6,1). When the foundry practices have been so established, the practices shall not be changed without demonstration, to the satisfaction of the procuring activity, that the change does not adversely affect the quality of the castings.

3.6 Nondestructive test inspection (production castings). Nondestructive test inspection shall be conducted in accordance with MIL-STD-278, based upon the applicable category and sub-category of the casting, for conformance with the acceptance criteria referenced therein. These categories shall be noted on the casting drawing (see 6.1).

3.7 Identification marking. When castings are of sufficient size, each casting shall be permanently marked with the following identification data in conformance with MIL-STD-792:

(a) Specification number.
(b) Manufacturer's name or trademark.
(c) Melt or lot number.
(d) Pattern or drawing number.

3.7.1 When castings are of a size that individual marking is impracticable, castings of the same lot or melt and pattern shall be wired together or placed in a container, or otherwise segregated, and a metal tag containing the data required in 3.7 attached thereto.

3.8 Dimensions. The responsibility for furnishing castings that can be laid out and machined to the finished dimensions within the specified drawing tolerances, and that will conform to such gages as may be specified in individual cases, shall rest with the contractor. Sufficient stock shall be allowed for shrinkage, and where required, for subsequent machining. Castings of excessive size or weight, however, shall not be furnished.

3.9 Cleaning. Castings shall have heads and gates removed, shall be thoroughly cleaned, and all sand, fins, excessive rough spots and similar conditions removed by mechanical means prior to final inspection.

3.10 Workmanship. Castings shall be free of injurious blowholes, porosity, hard spots, cracks, and other defects revealed by manufacturing operations subsequent to final acceptance.

4. QUALITY ASSURANCE PROVISIONS

4.1 Responsibility for inspection. Unless otherwise specified in the contract or purchase order, the supplier is responsible for the performance of all inspection requirements as specified herein. Except as otherwise specified in the contract or order, the supplier may use his own or any other facilities suitable for the performance of the inspection requirements specified herein, unless disapproved by the Government. The Government reserves the right to perform any of the inspections set forth in the specification where such inspections are deemed necessary to assure supplies and services conform to prescribed requirements.

4.2 Lot.

4.2.1 Chemical analysis. For purpose of chemical analysis, a lot shall consist of all castings poured from one heat.

4.2.2 Mechanical properties. For purposes of determining mechanical properties, a lot shall consist of all castings from the same heat, heat-treated in the same furnace charge.

4.3 Sampling.

4.3.1 Sampling for chemical analysis. A sample for chemical analysis shall be selected from test coupons or from representative castings in accordance with method 111 or 112 of FED-STD-151.

4.3.2 Sampling for mechanical tests.

4.3.2.1 Separately cast coupons. Except as specified in 4.3.2.2 and 4.3.2.3, at least two separately cast test coupons having the form and dimensions shown in figure 1 shall be poured from each lot. A standard keel block casting or separately risered test coupons are permitted.

4.3.2.2 Attached coupon. When specified (see 6.1), or if the manufacturer so desires and the procedure is satisfactory to the purchaser, test coupons at least one inch thick and five inches long may be attached to the castings as follows:

(a) Each casting weighing 250 pounds or more shall have at least one test coupon attached thereto. Location of the test coupon shall be as agreed to by the procuring activity and the manufacturer.
(b) For castings weighing less than 250 pounds, at least one test coupon shall be attached to each of two or more castings in each lot.

4.3.2.3 Sample castings. When specified (see 6.1), or if the manufacturer so desires and the procedure is satisfactory to the purchaser, a casting from the lot may be used in lieu of spearately cast or attached test coupons. In such cases, two test coupons shall be selected. If the wall thickness of the casting varies by more than one inch, one coupon shall be representative of a heavy wall section and the other of a light wall section.

4.3.2.4 Identification of test coupons. All test bars shall be identified with the proper heat or lot number.

4.3.2.5 Chilling of test coupons. The use of chills is prohibited in casting test bars or test coupons, except when authorization is given by the procuring activity to cast all castings of the lot in chill molds.

4.3.3 Sampling for visual and dimensional examination. From each lot, samples shall be selected for visual and dimensional examination in accordance with MIL-STD-105 at inspection level I. The acceptable Quality Level (AQL) shall be 4.0 percent defective.

4.4 Visual and dimensional examination. Each of the castings selected in 4.3.3 shall be visually and dimensionally examined for conformance with the specification. Any casting in the lot containing one or more visual or dimensional defects shall be considered a defective item and shall be cause for rejection. If the number of defective items found in the lot equals or exceeds the rejection number specified in MIL-STD-105, this shall be cause for rejection of the lot, subject to the resubmittal provisions of MIL-STD-105.

4.5 Examination of preparation for delivery. Packaging and packing shall be examined for compliance with the requirements of section 5. Examination shall be in accordance with MIL-STD-105, with an AQL of 4 percent defective.

4.6 Test procedures.

4.6.1 Chemical analysis. The sample obtained in 4.3.1 shall be analyzed in accordance with method 111 or 112 of FED-STD-151 for compliance with table I.

4.6.2 Mechanical properties.

4.6.2.1 Preparation of specimens. Samples selected in 4.3.2 shall be machined to the form and dimensions of the standard 0.500 inch round tension test specimen of ASTM E8-69. In the event that a sample casting (see 4.3.2.3) has a wall thickness less than 0.750 inch, the largest practicable standard round tension test specimen of ASTM E8-69 shall be prepared.

4.6.2.2 Tension tests. Tension tests shall be conducted in accordance with the procedures specified in ASTM E8-69 to determine compliance with 3.2.

4.6.2.3 Replacement of test specimens. If any test specimen shows defective machining or reveals casting defects, the specimen may be discarded and replaced by another specimen.

4.7 Rejection and retest. If any specimen fails to conform to the requirements of this specification, it shall be cause for rejection of the lot, except as specified in 4.4, subject to the retest provisions of FED-STD-151.

5. PREPARATION FOR DELIVERY

(The preparation for delivery requirements specified herein apply only for direct Government procurements.)

5.1 Packaging and packing.

5.1.1 General.

5.1.1.1 When practicable, shipping containers shall be of uniform size, minimum weight and cube, and shall contain the identical number of castings of the same pattern. Containers shall be designed to fit the contents in a compact manner. Castings shall be blocked, braced, or otherwise secured to prevent their movement and damage within the shipping containers during shipment, handling, and storage.

5.1.1.2 Finished or polished castings. Finished or polished castings shall be packaged and packed to afford protection against deterioration and damage. Where practicable, castings shall be boxed or crated in containers as specified for the required level of packing (see 5.2). When containers are not practicable, finished or polished castings shall have such surfaces protected by a wrap or cover of neutral, flexible barrier material and wood batten strips. The batten strips shall be secured in place with nailless type, corrosion-resistant treated steel strips.

5.1.1.3 Rough castings. Unless otherwise specified (see 6.1), rough castings not susceptible to damage during shipment, handling, or storage may be shipped unpacked or bundled. Castings that are susceptible to damage shall be packed in containers as specified for the level of packing required (see 5.2).

5.1.1.4 Castings having projections. Castings having projections shall be either packed in containers as specified for the level of packing required (see 5.2), or protected with a wrap or cover of neutral, flexible barrier material and wood battens. The batten strips shall be secured in place with nailless type, corrosion-resistant treated steel straps.

5.2 Packing. Packing shall be level A, B, or C, as specified (see 6.1). Unless otherwise specified (see 6.1), selection of the container including style, for the packing level required, shall be at the supplier's option.

5.2.1 Levels A and B containers.

5.2.1.1 Small castings weighing up to 250 pounds each shall be packed in containers conforming to the following specifications:

SPECIFICATION	CONTAINER	TYPE OR CLASS LEVEL A	 LEVEL B
PPP-B-585	Wood-wirebound	Class 2	Class 1
PPP-B-601	Wood-cleated-plywood	Overseas-Grade B	Domestic
PPP-B-621	Wood-nailed and lock-corner	Class 2-Grade B	Class 1
PPP-C-650	Wood-open and covered	Open	Open

Container closure shall be in accordance with the applicable container specification or appendix thereto. The gross weight of wood boxes shall not exceed approximately 250 pounds, unless the weight of a single casting exceeds that weight. Boxes exceeding 200 pounds gross weight shall be modified by the addition of skids in accordance with the applicable box specification.

5.2.1.2 Large rough castings weighing more than 250 pounds each require no packing except that, when specified for convenience in handling due to size and shape, the items shall be secured on skids or pallets. Large finished or polished castings having projections or surfaces that may be damaged shall be packed as specified in 5.1.1.2 and shall be adequately anchored, blocked, or braced to prevent damage. Containers, when required, shall be as specified in 5.2.1.1.

5.2.2 Level C. Castings shall be packed for shipment in a manner acceptable to the common carrier and which will insure safe delivery at destination in a satisfactory condition at the lowest applicable rate. Containers, packing, or method of shipment shall comply with Uniform Freight or National Motor Freight Classification Rules or Regulations or other carrier rules as applicable to the mode of transportation.

5.3 Marking. In addition to any special marking required by 3.7 herein, or by the contract or order (see 6.1), castings unpacked, bundled, palletized, or skidded, and shipping containers shall be marked for shipment and storage in accordance with MIL-STD-129.

5.3.1 Special marking. Each bundle, palletized or skidded load, shipping container, and unpacked casting shall be marked with the name of material, pattern or mold number as specified on the applicable drawing, this specification number, contractor's name, and contract or order number.

6. NOTES

6.1 Ordering data. Procurement documents should specify the following:

(a) Title, number, and date of this specification.
(b) Pattern or drawing number.
(c) Whether pattern is to be furnished.
(d) Quantity of castings required.
(e) When preproduction foundry control is required (see 3.5).
(f) Method of examination and quality standards to be met during preproduction foundry control (see 3.5).
(g) Category and sub-category of casting noted on drawing (see 3.6).
(h) Whether attached test coupons are required (see 4.3.2.2).
(i) Whether test coupons from a sample casting are required (see 4.3.2.3).
(j) When rough castings may be shipped unpacked or bundled (see 5.1.1.3).
(k) Level of packing required (see 5.2).
(l) Selection of containers and style if other than supplier's option (see 5.2).
(m) Special markings required (see 5.3).

6.2 Propeller alloys are covered by MIL-B-21230 (see 1.1).

Preparing activity:
Navy - SH
(Project MECA-N047)

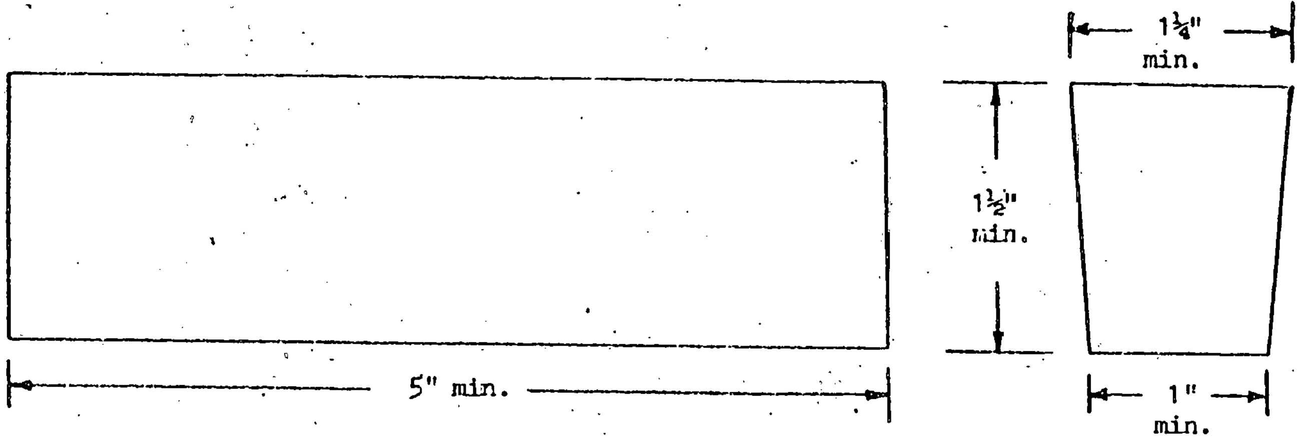

Figure 1 - Separately cast test coupon.

SH10531

☆ U.S. GOVERNMENT PRINTING OFFICE: 1973-714-542/4056

SHANKMAN ASSOCIATES

Metallurgical Consultants
Materials Engineers

A. D. SHANKMAN, TECHNICAL DIRECTOR

19711 LITTLE HARBOR DRIVE
HUNTINGTON BEACH, CA 92648
(714) 960-1020

August 14, 1979

Mr. Dave Alfson
Global Marine Development Inc.
2302 Martin Street
Irvine, CA 92715

SUBJECT: Preliminary Material Recommendations for the OTEC 10/40 Universal Joint Bearing Pin Forging

Because of their excellent hardenability, the nickel alloy steels are used exclusively for heavy forgings such as for turbine rotors and shafts. The ASTM A293 and A470 specifications are applicable. They call for normalizing or double normalizing and tempering the massive cross sections to produce varying mechanical properties. Minimum properties for the vacuum melted 3.00 Nickel -0.27 Carbon grade is:

UTS	YS	Elong.	%RA	C_V Impact
100 ksi	80 ksi	17%	45%	25 ft lbs

For a 30 year service life in the sea water environment, the corrosion resistance will have to be maximized. It appears that this can best be done with an Inconel 625 type cladding. The coefficient of thermal expansion of Inconel 625 is 7.1×10^{-6} in./in./°F, that of an alloy steel about 6.8×10^{-6}, so that welding the cladding except for the necessary preheat will not present any difficult problems. A final heat treat/stress relief of this pairing should present no problems either.

A. D. Shankman

ADS/pm

INCONEL
alloy 625

INCONEL nickel-chromium alloy 625 is used for its high strength, excellent fabricability (including joining), and outstanding corrosion resistance. Service temperatures range from cryogenic to 1800°F. Composition is shown in Table 1.

Strength of INCONEL alloy 625 is derived from the stiffening effect of molybdenum and columbium on its nickel-chromium matrix; thus precipitation-hardening treatments are not required. This combination of elements also is responsible for superior resistance to a wide range of corrosive environments of unusual severity as well as to high-temperature effects such as oxidation and carburization.

INCONEL alloy 625 is readily fabricated by common industrial practices. Two companion welding products—INCONEL Filler Metal 625 and INCONEL Welding Electrode 112—ensure achievement of high-quality joints with strength and corrosion resistance comparable to those of the base material.

The properties of INCONEL alloy 625 that make it an excellent choice for sea-water applications are freedom from local attack (pitting and crevice corrosion), high corrosion-fatigue strength, high tensile strength, and resistance to chloride-ion stress-corrosion cracking. It is used as wire rope for mooring cables, propeller blades for motor patrol gunboats, submarine auxiliary propulsion motors, submarine quick-disconnect fittings, submarine propulsion pump motors, exhaust ducts for Navy utility boats, sheathing for undersea communication cables, submarine transducer controls, and steam-line bellows. Potential applications are springs, seals, bellows for submerged controls, electrical cable connectors, fasteners, flexure devices, and oceanographic instrument components.

High tensile, creep, and rupture strength; outstanding fatigue and thermal-fatigue strength; oxidation resistance; and excellent weldability and brazeability are the properties of INCONEL alloy 625 that make it interesting to the aerospace field. It is being used in such applications as aircraft ducting systems, engine exhaust systems, thrust-reverser systems, resistance-welded honeycomb structures for housing engine controls, fuel and hydraulic line tubing, spray bars, bellows, turbine shroud rings, and heat-exchanger tubing in environmental control systems. It is also suitable for combustion system transition liners, turbine seals, compressor vanes, and thrust-chamber tubing for rocket motors.

The outstanding and versatile corrosion resistance of INCONEL alloy 625 under a wide range of temperatures and pressures is a primary reason for its wide acceptance in the chemical processing field. Because of its ease of fabrication, it is made into a variety of components for plant equipment. Its high strength enables it to be used, for example, in thinner-walled vessels or tubing than possible with other materials, thus improving heat transfer and saving weight. Some applications requiring the combination of strength and corrosion resistance offered by INCONEL alloy 625 are bubble caps, tubing, reaction vessels, distillation columns, heat exchangers, transfer piping, and valves.

In the nuclear field, INCONEL alloy 625 is being specified for reactor-core and control-rod components in nuclear water reactors. The material was selected because of its high strength, excellent uniform corrosion resistance, resistance to stress cracking and excellent pitting resistance in 500°-600°F water. Alloy 625 is also being considered in advanced reactor concepts because of its high allowable design strength at elevated temperatures, especially between 1200°-1400°F.

The properties given in this bulletin, results of extensive testing, are typical of the alloy but should not be used for specification purposes. Applicable specifications appear in the last section of this publication.

Table 1 — Limiting Chemical Composition, %

Nickel	Bal.	Manganese	0.50 max.
Chromium	20.00-23.00	Silicon	0.50 max.
Iron	5.00 max.	Phosphorus	0.015 max.
Molybdenum	8.00-10.00	Sulfur	0.015 max
Columbium		Aluminum	0.40 max.
(plus Tantalum)	3.15-4.15	Titanium	0.40 max.
Carbon	0.10 max.	Cobalt[a]	1.00 max.

[a] If determined.

CORROSION RESISTANCE

The high alloy content of INCONEL alloy 625 enables it to withstand a wide variety of severe corrosive environments. In mild environments such as the atmosphere, fresh and sea water, neutral salts, and alkaline media there is almost no attack. In more severe corrosive environments the combination of nickel and chromium provides resistance to oxidizing chemicals, whereas the high nickel and molybdenum contents supply resistance to nonoxidizing environments. The high molybdenum content also makes this alloy very resistant to pitting and crevice corrosion, and columbium acts to stabilize the alloy against sensitization during welding, thereby preventing subsequent intergranular cracking. Also, the high nickel content provides freedom from chloride-ion stress-corrosion cracking.

This combination of characteristics makes INCONEL alloy 625 useful over a broad spectrum of corrosive conditions. For instance, it has been recommended as a material of construction for a storage tank to handle chemical wastes, including hydrochloric and nitric acids—chemicals which represent directly opposite types of corrosion problems. Materials which resist either one of these acids are normally severely attacked by the other.

More general information may be found in RESISTANCE OF HUNTINGTON ALLOYS TO CORROSION[7].

INTERGRANULAR CORROSION

It is in resistance to intergranular corrosion due to sensitization that the alloy shows outstanding performance. In general, nickel-chromium and nickel-iron-chromium alloys are subject to severe intergranular corrosion in some very aggressive environments if they are heat-treated to produce sensitization. INCONEL alloy 625 shows unusual stability after being welded or when subjected to heat treatments that result in serious sensitization of other nickel-chromium and nickel-iron-chromium alloys. In laboratory tests the most severe sensitizing heat treatment studied caused only a twofold increase in Huey test rate (see Figure 21).

Because even deliberately sensitized INCONEL alloy 625 corrodes at a very low rate in nitric acid, solution treating after welding is not necessary.

Another method for determining the susceptibility of nickel-chromium-molybdenum alloys to intergranular attack is the ferric sulfate-sulfuric acid test[8]. In this test, specimens are subjected to heat treatment normally expected to produce sensitization and then immersed in a solution of 50% H_2SO_4 containing 42 gram/liter $Fe_2(SO_4)_3$ for 24 hr. Such specimens of INCONEL alloy 625 exhibited relatively low corrosion rates throughout the range of heat treatments experienced. In laboratory tests, sheet specimens solution-treated 2200°F/20 min, W.Q., heat-treated at a lower temperature for 1 hr, and subjected to the ferric sulfate-sulfuric acid test corroded at the following rates:

Heat Treatment Temperature, °F/1 hr	Corrosion Rate, mpy
1000	67
1100	55
1200	57
1300	71
1400	52
1500	52
1600	78
1800	57
1900	48
2000	48
2100	65
2200	69

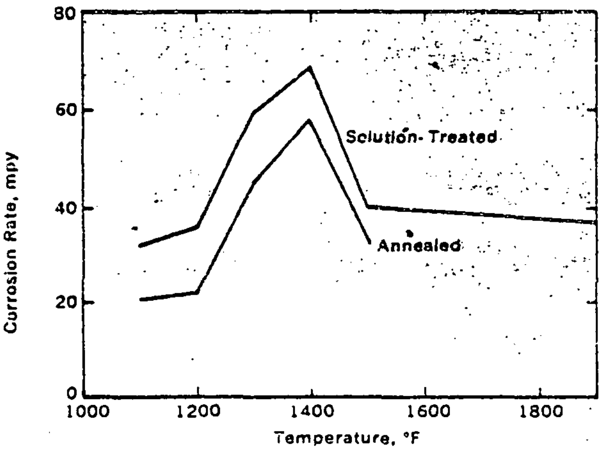

Figure 21 — Effect of sensitizing heat treatment on corrosion of INCONEL alloy 625 in boiling 65% nitric acid (Huey test—average of 5 periods).

ATMOSPHERIC CORROSION

INCONEL alloy 625 shows negligible corrosion on exposure to marine, industrial, and rural atmospheres.

CORROSION BY WATER

In fresh waters, corrosion rates are essentially zero. INCONEL alloy 625 is recommended for resistance to high-velocity sea water and brine. In sea water, under both stagnant and flowing conditions, weight losses are extremely low (see Table 13). In such environments it is highly resistant to pitting, chloride-ion stress-corrosion cracking, and crevice attack. Its excellent corrosion-fatigue strength is shown in Table 14.

INCONEL alloy 625 is highly resistant to attack by brackish water. For example, corrosion rates were <0.1 mpy in these two environments:

(1) Brackish water in Newark Bay. 0.70% NaCl, 1000 ppm Ca^{++} as $CaCo_3$, pH 6.7, 60 ppm HCl. Temperature, 45°F. Test duration, 60 days. Aeration, moderate. Agitation, low.

(2) Delaware River water (brackish) at Delaware City, Delaware. Temperature, Boiling. Test duration, 167 days. Aeration, not intentionally, but open to air. Agitation, by boiling; flow low, however.

Table 13 — Corrosion in Sea Water

Exposure, day	Type of Specimen[a]	Weight Loss, gram
Stress-Corrosion Tests (4 x 12 x ¼ in. specimens with 2-in. circular welds; material annealed at 1800°F prior to welding)[b]		
180	—	0.02
355	—	0.01
Immersion in Quiet Sea Water (4 x 12 x ¼ in. specimens)[c]		
180	Plain	0.05
180	Crevice	0.05
355	Plain	0.02
365	Crevice	0.04
Immersion in Flowing (2 fps) Sea Water (4 x 6 x ¼ in. specimens)[c]		
180	Plain	0.04
180	Crevice	0.05
365	Plain	0.01
365	Crevice	0.02

[a] Crevice indicates 1¼ in. fiber washer bolted to center of panel face.
[b] None of the specimens failed.
[c] There was no localized attack.

Table 14 — Corrosion Fatigue Strength in Sea Water

Tensile Strength, psi	Yield Strength (0.2% Offset), psi	Elongation, %	Corrosion Fatigue Strength (10^8 Cycles), psi
129,500	65,000	53	49-55,000
149,000	98,000	43	51,000
144,000	80,800	49	48,000

CORROSION BY ACIDS

Sulfuric Acid

Laboratory data on the performance of INCONEL alloy 625 in sulfuric acid are shown in Table 15. Additional tests in acid of other concentrations at 176°F yielded the following corrosion rates:

15%	7.4 mpy
50%	17 mpy
60%	28 mpy
70%	64 mpy
80%	90 mpy

Investigations are being conducted to further define concentration and temperature relationships. Corrosion resistance at the boiling point, however, has been poor in all concentrations studied.

In a pickling bath solution containing 28% sulfuric acid and 5.9% hydrofluoric acid at 120°-175°F, corrosion rate was 49 mpy.

Table 15 — Corrosion Rates, mpy, in 15% Concentration Sulfuric Acid at 176°F

Alloy	Solution Saturated with	
	Air	Nitrogen
INCONEL alloy 625	7	7
INCOLOY alloy 825	11	6
INCOLOY alloy 901	13	9
INCOLOY alloy 800	29	28

Hydrochloric Acid

The nickel and molybdenum contents of INCONEL alloy 625 impart resistance to hydrochloric acid.

In laboratory solutions of hydrochloric acid at 150°F, corrosion rates were:

Acid Concentration, %	Corrosion Rate, mpy
5	71
10	81
15	65
20	50
25	38
30	34
Conc.	15

Hydrofluoric Acid

INCONEL alloy 625 is used to line a hydrofluoric acid generator which reacts sulfuric acid with fluorspar; it is also used for fittings, piping, etc. internal to the generator. In 60-day exposure in the top of an HF stripping column, a test specimen corroded uniformly at a rate of 5 mpy.

Phosphoric Acid

INCONEL alloy 625 shows excellent resistance to boiling phosphoric acid solutions in concentrations up to about 50% (see Figure 22). Above 50% concentration, the rates increase sharply with increasing concentration. In a solution of 55% phosphoric acid and 0.8% hydrofluoric acid at boiling temperature, the alloy showed a corrosion rate of 16.5 mpy in a 48-hour test. Corrosion rates in other media containing phosphoric acid are shown in Table 16.

Nitric Acid

INCONEL alloy 625 has good resistance to nitric acid. A corrosion rate of 30 mpy (in boiling 65% nitric acid) is typical for this alloy in either the annealed or solution-treated condition. See also the section on Intergranular Corrosion.

Table 16 — Corrosion in Media Containing Phosphoric Acid[a]

Test Condition	Corrosion Rate, mpy
Phosphoric acid (wet process), 28% (P_2O_5 20%), sulfuric acid 20-22%, fluoride about 1-1.5%, probably as fluosilicic acid. Temperature, 180°-230°F. Test, 42 days. Aeration, moderate. Agitation, natural convection only.	1.4
Phosphoric acid 99% (72% P_2O_5), wet process, sulfuric acid 3.7% (3.0% SO_3), fluoride 0.5%. Temperature, 60°-600°F. Duration, approximately 20.8 days. Aeration, moderate. Agitation, only sufficient to break up foam.	14.8
Exhaust gases from evaporator; entrained phosphoric acid, sulfuric acid vapor, sulfur trioxide, nitrous acid, silicon tetrafluoride, water vapor; sprayed with water containing phosphoric acid 0.1%, sulfuric acid 0.06%, combined fluoride, 0.1%. Temperature, 50°-355°F. Duration, approximately 20.8 days. Aeration, extensive. Agitation, constantly sprayed with water.	12.9
Gases containing HF, SiF_4, SO_2, with entrained H_3PO_4 (72% P_2O_5), H_2SO_4 3.7% (3.0% SO_3). Temperature, 60°-650°F. Duration, approximately 20.8 days. Aeration, extensive. Agitation, fast-moving gas stream.	2.1
Vapor above phosphoric acid, 93.5% (67.8% P_2O_5), wet process, containing about 4.3% sulfuric acid and 4.4% iron and aluminum oxides. Fluoride is present, below 1.5%. Temperature, 375°-410°F. Test duration, 52 days. Aeration, moderate. Agitation, rapid.	30
Phosphoric acid, wet process, 98% (71% P_2O_5), sulfuric acid 4-6%, iron and aluminum 2.8-3.0% as trioxides, fluorine compounds 0.5-1.0% (calculated as fluoride). Temperature, 390°-460°F. Duration, 70 days. Aeration, extensive. Agitation, present—by pump. Location, in hot well of evaporator.	6.6
Phosphoric acid 55% (40% P_2O_5), sulfuric acid 3.0% (2.5% SO_3), calcium sulfate (hemihydrate) slurry; fluorine compounds. Liquid phase, Gases containing H_2O and SiF_4 are evolved. Foam distribution process. Temperature, 221°-261°F. Duration, 18.7 days. Aeration, none. Agitation, 0.8 fps. Location, reaction zone of extraction vessel.	24[b]
Phosphoric acid, wet process, 39% (28% P_2O_5), sulfuric acid 2%, hydrofluosilicic and hydrofluoric acids in trace amounts; total fluoride equivalent about 1.2%. Suspended gypsum 30% of suspension weight. Liquid phase. Temperature, 170°-183°F. Duration, 96 days. Aeration, moderate. Agitation, strong.	0.7
11-13% fluosilicic acid plus undescribed impurities from wet process phosphoric acid. Liquid phase. Temperature, 140° to 165°F. Duration, 49 days. Aeration, extensive. Agitation, little.	0.5, 0.9

[a] No pitting occurred except in one instance as noted.

[b] Pitting—0.003-in. ring outside spacer.

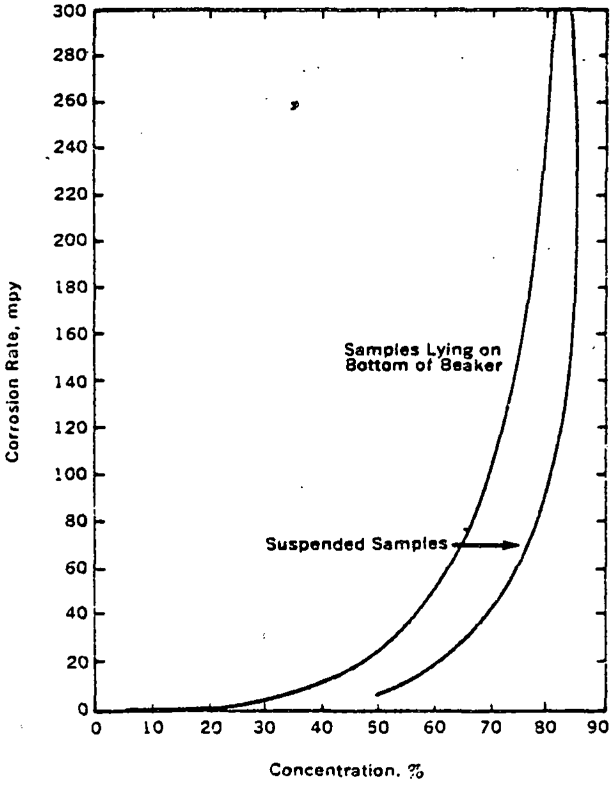

Figure 22—Corrosion in boiling phosphoric acid solutions.

Organic Acids

The composition of INCONEL alloy 625 is indicative of excellent resistance to a wide range of boiling, concentrated organic acids, but the availability of other materials that give good service in these environments has limited its use.

CORROSION BY ALKALIES

In laboratory tests in boiling 50% sodium hydroxide, specimens of INCONEL alloy 625 had a corrosion rate of 0.5 mpy (average penetration of duplicate samples run for five 48-hr periods). In stress-corrosion tests, no cracking occurred in 500-hr exposure to boiling 50% sodium hydroxide.

CORROSION BY SALTS

INCONEL alloy 625 has resistance to corrosion in a variety of salt solutions. Typical test results are shown in Table 17.

In a laboratory stress-corrosion-cracking test, 6 x ½ x ⅛ in. U-bend specimens of annealed material were exposed to a boiling 45% magnesium chloride solution for 90 days. No evidence of cracking was found.

The molybdenum content of INCONEL alloy 625 has a beneficial effect on pitting resistance. To demonstrate this, 2- by 4-in. samples were exposed to an acidified ferric chloride solution (10.8% concentration salts) at 95°F for 4 hr. The severity of the test can be seen from the attack on alloys containing very little molybdenum (Figure 23). Type 304 stainless steel (0.2% Mo*) and INCOLOY alloy 800 (0.1% Mo*) are severely pitted. A striking improvement can be seen in the next two alloys (Type 316 stainless steel and INCOLOY alloy 825), each of which has about 3% Mo. INCOLOY alloy 901 (6.2% Mo) shows increased resistance, and INCONEL alloy 625 (8.8% Mo) exhibits no visible pitting.

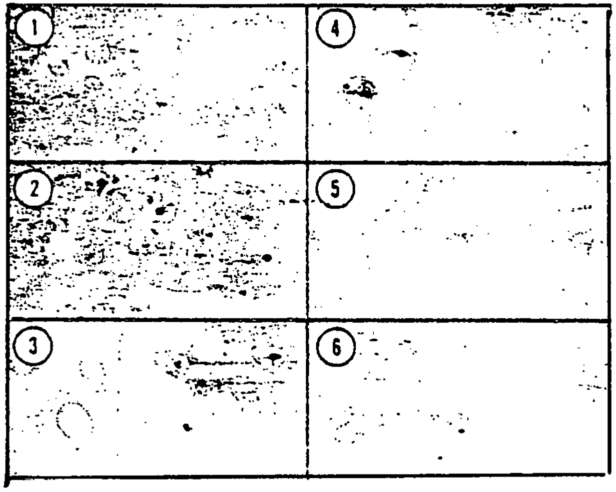

Figure 23 — **Resistance to pitting attack in ferric chloride solution: (1) Type 304 stainless steel, 0.2% Mo; (2) INCOLOY alloy 800, 0.1% Mo; (3) Type 316 stainless steel, 2.7% Mo; (4) INCOLOY alloy 825, 3.0% Mo; (5) INCOLOY alloy 901, 6.2% Mo; (6) INCONEL alloy 625, 8.8% Mo.**

CORROSION BY FLUORINE, CHLORINE, AND HYDROGEN CHLORIDE

Few specific data are available on the corrosion resistance of INCONEL alloy 625 in fluorine, chlorine, and hydrogen chloride environments. In some applications where it would give satisfactory service, other available materials may be a more economical choice. Guidelines on the selection of alloys for such environments may be found in Reference 7.

CORROSION BY MISCELLANEOUS CHEMICALS

INCONEL alloy 625 has shown excellent resistance to a variety of media made up of several chemical solutions. Some examples are given in Table 18.

Table 17 — **Corrosion in Media Containing Salts**

Media	Corrosion Rate, mpy	Max. Pitting, mil
Five solutions, each singly: calcium chloride 40%, pH 2, 35% of time; zinc sulfate 40%, pH 1.8, 35% of time; aluminum sulfate 3-30%, pH 3, 15% of time; magnesium sulfate 40%, pH 3, 10% of time; zinc chloride 40%, pH 1.8, 5% of time. Temperature, 70°-200°F. Duration, 73 days x 90%. Aeration, moderate. Agitation, Lightin' Mixer.	0.1	1
Cuprous chloride, cuprous cyanide, p-chlorophenol-N-methyl pyrolidone, p-cyanophenol. Temperature, 455°F. Duration, 48 hours. Areation, none. Agitation, by boiling only.	0.5	—
Cyanuric chloride ($C_3N_3Cl_3$) 5-20% in carbon tetrachloride or toluene, chlorine 0.5%, cyanogen chloride (CNCl) 0.3%, hydrogen chloride and phosgene (carbonyl chloride).	0.5	1
51% $MgCl_2$, 1% NaCl, 1% KCl, 2% LiCl as concentrated from natural Bonneville brines of 33% solubles. Duration, 120 hours (100 hours with brine only, 20 hours with 0.2% fluosilicic acid and 0.1% HF present). Areation, little. Agitation, moderate.		
Liquid phase. Temperature, 330°-335°F.	2	—
Vapor phase. Temperature, 330°-355°F.	3	—
53% $MgCl_2$, 1% NaCl, 1% KCl, 2% LiCl, as concentrated from natural Bonneville brines of 33% solubles. Temperature, 335°-355°F. Duration, 200 hours. Aeration, little. Agitation, moderate to considerable.	0.5	—
Vapor phase above 53% magnesium chloride with 8-10,000 ppm HCl in condensate. Temperature, 335°-345°F. Duration, 200 hours. Aeration, airfree after start-up.	4	—
Vapors over 50% $MgCl_2$ with 500-4000 ppm HCl in condensate and 1000 ppm $MgCl_2$. Temperature, 310°F. Duration, 45 hours. Aeration, moderate after start-up. Agitation.	2	(Scattered pits)
50% $MgCl_2$ solution, plus 1% NaCl, 1% KCl, 2% LiCl, concentrating natural Bonneville brine from 33% solubles to 50%. Temperature, 310°F. Duration, 45 hours. Aeration, little. Agitation, moderate.	0.8	(Scattered pits)
Zinc chloride up to 71% (72° Be). Temperature, 225°F. Duration, 35 days. Aeration, none; under 28 in. vacuum. Agitation.	0.3	3

---

*Chemical analysis of specimen tested.

Table 18 — Corrosion in Miscellaneous Chemical Media[a]

Media	Corrosion Rate, mpy
Esterification. Six days in corrosive media: short chain alcohols, acetic acid, acetic anhydride at times; corresponding acetates. Thirty-nine days in milder media: alcohols, principally isopropyl and butyl, fatty acids (myristic to stearic), corresponding esters, small amount of p-toluene-sulfonic acid. Water, trace. Aeration, none. Agitation, medium.	0.5
Phosphorus trichloride, PCl_3; methyl dichlorophosphine, CH_3PCl_2; lower concentrations phosphorus oxychloride $POCl_3$; methoxydichlorophosphine, CH_3OPCl_2; triethyl phosphate, $(C_2H_5O)_3PO$; chlorine. Anhydrous. Temperature, 45°- 30°F. Duration, 72 days. Aeration, none. Agitation, liquid velocity about 1 fps.	0.1
Methyl dichlorophosphine, (H_3PCl_2); lower concentrations methoxydichlorophosphine, (H_3OPCl_2); phosphorus trichloride, PCl_3; phosphorus oxychloride, $POCl_3$; triethyl phosphate, $(C_2H_5O)_3PO$. Anhydrous. Temperature, 195°-225°F. Duration, 76 days. Aeration, none. Agitation, rapid.	1.5[b]
Phthalic anhydride, unspecified alcohol, phthalate ester, sulfuric acid $<1\%$. Temperature, 60°-275°F. Duration, 138 days. Aeration, none. Agitation, moderate, mechanical.	0.3
Vapor over sebacic acid; sulfuric acid, pH 2-6 Temperature, room to 220°F. Duration, approx. 65 days. Aeration, extensive. Agitation, considerable, by boiling of liquid.	<0.1
Sodium hydroxide 20%, diethylene glycol 80%. Forming sodium diethylene-glycolate, addition of dimethylamine, organic chloride, forming amide; strongly alkaline. Temperature, ambient to 320°F. Duration, 42 days. Aeration, none. Agitation, considerable.	0.1
Tetramethylthiuramdisulfide, sodium dimethylthiocarbamate, sodium nitrite and hydrochloric acid; zinc salt of same, zinc chloride. Temperature, 65°-77°F. Duration, 36 days. Agitation, medium	
In liquid	<0.1
In vapor	<0.1
Separate waste solutions: hydrochloric acid 5 to 30%, sulfuric acid 10 to 40%, nitric acid 10 to 25%, sodium hydroxide 1 to 40%, sodium carbonate, dichlorobenzene 2 to 5%, pomalus acid and fumaric acid $<5\%$, mono- and dinitrobenzenes and aniline, traces. Temperature, 104°F. Duration, 127 days. Aeration, moderate. Agitation, present—by turbine agitator.	<0.1
Cresylic acid, phenol, formaldehyde, sulfuric acid, ethylenediamine, phosphoric acid, sodium hydroxide, barium hydroxide, carbon dioxide, ammonia. (Batch-basis manufacture of phenolic resins and varnishes). Temperature, 113°-266°F. Duration, 58 days. Aeration, moderate. Agitation, vapor moving—velocity unknown. Location, initially in product vapor line, later in kettle.	<0.1
Cresylic acid, phenol, formaldehyde, sulfuric acid, ethylenediamine, phosphoric acid, sodium hydroxide, carbon dioxide, ammonia, barium hydroxide. Corrosive media varied from mixed phenol and sulfuric acid at 266°F to 20% sodium hydroxide at 212°F. (Batch-basis manufacture of phenolic resins and varnishes). Temperature, 113°-266°F. Duration, 95.8 days approximately. Aeration, moderate. Agitation, mild. Location, submerged in kettle.	<0.1

[a] No pitting occurred except in one instance as noted.

[b] Max. pitting—1 mil.

HIGH-TEMPERATURE OXIDATION

INCONEL alloy 625 has good resistance to oxidation and scaling at high temperature. Its performance in an extremely severe test is shown in comparison with that of other materials in Figure 24. In this test[9], periodic weight-loss determinations indicate the ability of the alloy to retain a protective oxide coating under drastic cyclic conditions. 1800°F is a temperature at which scaling resistance becomes a significant factor in service.

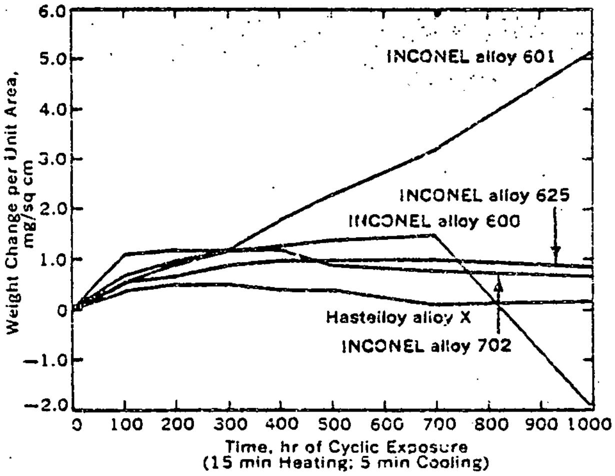

Figure 24 — Scaling resistance at 1800°F.

WORKING INSTRUCTIONS

HEATING AND PICKLING

General procedures and precautions for heating INCONEL alloy 625 (either in preparation for hot working or for achievement of desired mechanical properties) and recommendations for pickling the material may be found in HEATING AND PICKLING HUNTINGTON ALLOYS[10].

APPENDIX G

GMDI

OTEC 10-40 TECHNICAL REPORT
ON DYNAMIC SPHERICAL SEAL
OF CWP

7 SEPTEMBER 1979

PREPARED FOR TRW

GLOBAL MARINE DEVELOPMENT INC.
2302 Martin Street
Irvine, California 92715

RPT-4087-001
REVISION 0
7 SEPT 79

OTEC 10-40

TECHNICAL REPORT
ON
DYNAMIC SPHERICAL SEAL
OF
CWP

JOB 04087 TASK 031300

7 SEPTEMBER 1979

PREPARED BY: J HINTZ

APPROVED BY/DATE:

7 Sep 79
MGR MECH ENGINEERING

17 SEP 79
PROJECT ENGINEER

VP ENGINEERING

DOCUMENT NO. RPT-4087-001

GLOBAL MARINE DEVELOPMENT INC.

Newport Beach, Calif.

REVISION RECORD

REV.	DATE	AUTHORIZATION	CHANGE DESCRIPTION	PAGES AFFECTED
0	9-7-79	S.B. WETMORE	INITIAL RELEASE 9-10-79 Da EDC RELEASED	ALL

TABLE OF CONTENTS

1.0 ABSTRACT

This report defines a dynamic spherical seal which minimizes the infiltration of warm seawater into the moonpool area of the OTEC 10-40 platform. This seal design is a preliminary design which insures proper sealing of the sphere/moonpool gap. Refinements of the seal assembly might be required at a later date.

2.0 OBJECTIVES

The objective of this report is to define the method of preventing the relatively warm surface water from mixing with the colder, upwelled deep ocean water. This report describes a device which seals the gap between the platform's moonpool and a sphere attached to the CWP.

3.0 DESIGN REQUIREMENTS

The OTEC 10-40 plant requires that the temperature rise in the upstreamed cold water not be greater than 1°F. This dictates that warm water leakage be kept to a minimum. The leakage in the upper 1000 ft of CWP must be kept within a few percent of the total flow up the pipe. Since the maximum total flow rate up the CWP is 4600 ft^3/sec. The leak rate in the upper 1000 ft must be less than 115 ft^3/sec. at a maximum pressure differential of 7.4 psi. (See Reference 1).

The seal assembly will be designed in a manner so that on site servicing and replacement can be accomplished.

4.0 SUMMARY OF RESULTS

The Dynamic Spherical Seal (DSS) used to seal the CWP/moonpool gap will be a compliant, multicomponent unit. Fiberglass filled Teflon shoes with a concave mating surface will ride against the sealing sphere of the CWP. The low friction Teflon shoes will be supported by cantilevered stainless steel fingers which will provide inward pressure on the shoes to establish initial sealing. The finger will deflect radially relative to the ball to accommodate changes in the ball diameter and ball eccentricity. The fingers will support column loads caused by friction on the sealing shoes tending to raise or lower the shoes. The friction force is a result of the sphere rotating in the DSS shoes.

An elastomeric boot will encompass the seal shoe and finger assembly. This boot will seal the gaps between adjacent shoes and fingers while maintaining the compliance necessary for lateral and radial deflection of the boot. The lateral deflection is a result of a combination of the sphere being out-of-round, bearing and shaft eccentricities, and rotational axes misalignments. The boot will also expand in circumference to meet the changes in sphere diameter.(See Figs. 1-8, Appendix B for identification of seal components).

5.0 TECHNCIAL DISCUSSION

The main sealing component of the DSS was chosen to be 25% fiberglass filled Teflon. This material was chosen because of Teflon's inherent low coefficient of friction, and the good burnishing qualities due to the fiberglass fill. The burnishing quality is necessary to remove marine growth on the sphere. Teflon is also resistant to the chemical attack of seawater.

The wear of the Teflon shoes should be minimal due to the low rotational speed of the sphere (11.1 ft/min) and the low pressure on the shoes (7.4 psi max). (See Appendix A). The calculated wear of the shoes is approximately 1 mil/year. The wear might be greater depending on how much marine growth appears on the sphere. Inspection of the seal periodically during its service will dictate the frequency of replacement of the shoes.

The Teflon shoes are supported vertically and horizontally by a stainless steel finger attached to the shoe at one end and attached to a flange in the moonpool at the other end. (See Figure 4 in Appendix B). The finger will allow radial movement of the shoe which is necessary to follow inconsistancies in the spheres radius. These inconsistancies originate from the eccentricity, axes misalignment and axes wobble of the sphere.

As the sphere rotates in the DSS, it exerts a friction force on the Teflon shoes which tends to either raise or lower the shoes. If the shoes are subjected to being raised as the sphere rotates then a column load is induced in the finger. The support finger will resist vertical movement of the shoe without buckling. (See Appendix A).

The Teflon seal face will be machined to conform to the shape of the sphere and will be compressed to the surface of the sphere by the differential pressure across the seal. The shoes are T-shaped so that they overlap so as not to let water flow up through the vertical spacing gaps of the shoes. The gaps between the shoes are to allow the seal to change in diameter to conform tightly to the sphere. An estimated leakage rate of 3 ft^3/sec. is acceptable relative to the design requirements of keeping the leakage rate in the upper 1000 ft. of pipe down to about 115 ft^3/sec. (See Appendix A).

The shoe and finger mechanism assembly will consist of 80 shoes equally spaced on a 38 ft diameter. Each shoe will have its own support finger. To seal this entire assembly a 1" thick, 60 durometer neoprene boot will surround this assembly. The boot will be made in short sections to facilitate replacement of the seal components.

The sphere will be constructed of 316 stainless steel. This material was chosen because of its resistance to seawater corrosion and its high strength.

6.0 REFERENCES

(1) Ocean Thermal Energy Conversion Cold Water Pipe Preliminary Design Project - Task 2. Analysis for Concept Selection.

(2) Teflon - Mechanical Design Data - Dupont Company

APPENDIX A

LOADS, LEAKAGE RATE & WEAR RATE OF CWP DYNAMIC SPHERICAL SEAL

Jeff Hintz

7 AUG 79 OTEC 10-40 CWP SPHERICAL SEAL

Leakage Rate of Teflon Seal

Given information from:

Ocean Thermal Energy Conversion
Cold Water Pipe Preliminary Design Project
TASK 2 · Analysis for Concept Selection

Given: (1) flow rate up CWP $\simeq$ 4600 $\frac{ft^3}{sec}$, max.

(2) max. ΔP across seal $(P_{outside} - P_{inside})$ = 7.4 psi

(3) "leaks along upper 1000 ft. of pipe must be kept within few percent of the total pipe flow"

Note: at this time the CWP is not completely defined and the leak rate for the upper 1000 ft. of pipe is not known

(4) max. ΔT between deep water and surface water be kept below 1°F

JHH

7 AUG 79

The maximum leak rate in the upper 1000ft. of pipe, including the spherical seal, must be:

Leak rate $\leq 115 \ \mathrm{ft^3/sec}$

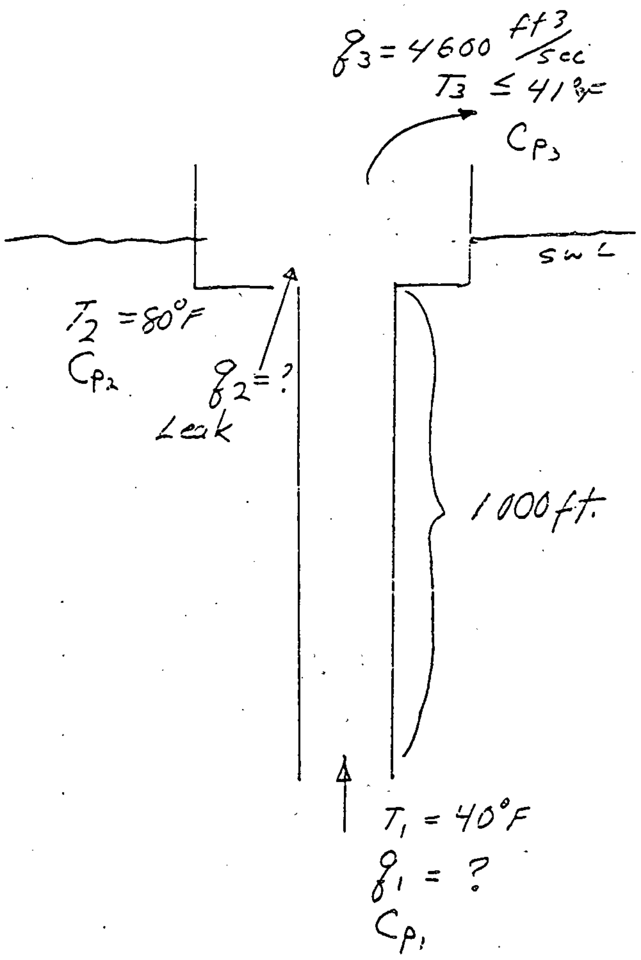

(1) $q_1 C_{p_1} T_1 + q_2 C_{p_2} T_2 = q_3 C_{p_3} T_3$

(2) $q_1 + q_2 = q_3 = 4600 \ \mathrm{ft^3/sec}$

assuming $C_{p_1} \simeq C_{p_2} \simeq C_{p_3}$

$$q_1 T_1 + q_2 T_2 = q_3 T_3$$

$$(q_3 - q_2) T_1 + q_2 T_2 = q_3 T_3$$

$$q_3 T_1 + q_2 (T_2 - T_1) = q_3 T_3$$

$$q_2 = q_3 \left(\frac{T_3 - T_1}{T_2 - T_1} \right)$$

$$q_2 = 4600 \left(\frac{41-40}{80-40} \right)$$

$$q_2 \Big|_{max} = \boxed{115 \ \mathrm{ft^3/sec}}$$

JYH

7 AUG 79

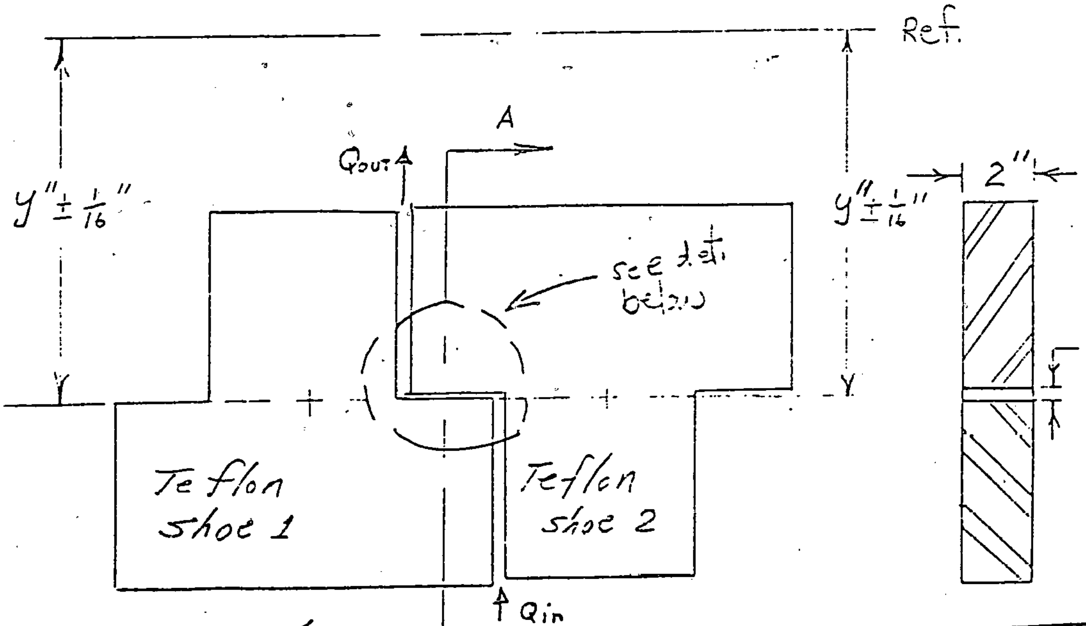

FIG. 1
TEFLON SHOE FIT

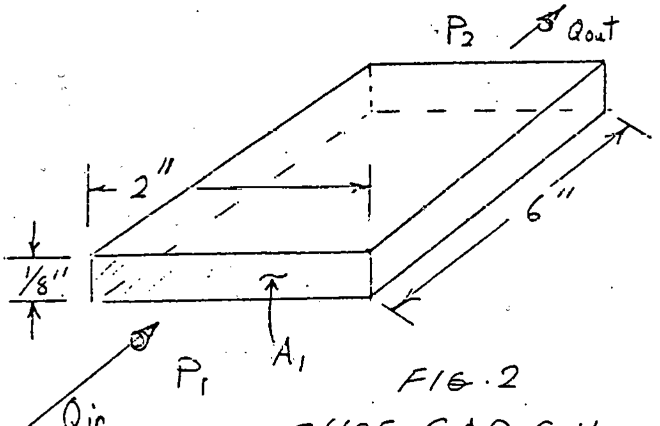

FIG. 2
SHOE GAP C.V.

$P_1 \equiv$ outside pipe press.

$P_2 \equiv$ inside pipe press.

Problem: find flow through C.V. for each gap (Q

Know:

(1) $Q = V \cdot A$ const. vol. flow rate

(2) $f = \dfrac{h_f}{\frac{L}{D}\frac{V^2}{2g}}$ friction factor

Bernoullis eqn.

(3) $\dfrac{V_1^2}{2g} + \dfrac{P_1}{\gamma} + z_1 - W = \dfrac{V_2^2}{2g} + \dfrac{P_2}{\gamma} + z_2 + h_L$

JHH

7Aug79

Since this is a retangular cross section with the ratio of sides greater than $\frac{1}{8}$ ($\frac{1}{16}$ in This case) the hydraulic diameter can't be used in the calculations. a conservative estimate would be to treat the duct as an equivalent round pipe.

$$\frac{\pi D^2}{4} = \left(\frac{1}{8} in\right)(2 in) \quad , \quad D^2 = \frac{1}{\pi}$$

$$\therefore \quad D = .56 \, in$$

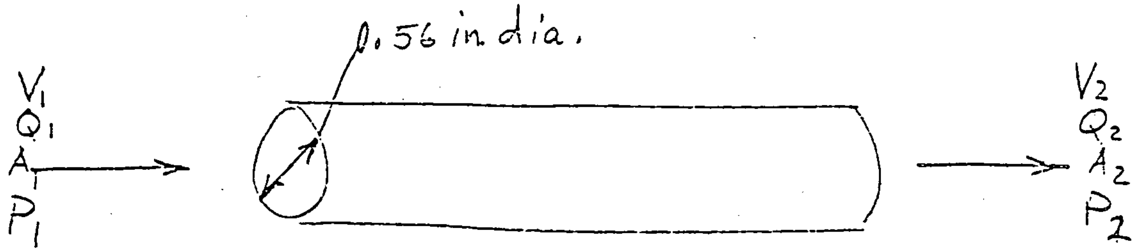

$Q_1 = Q_2$, $A_1 = A_2$ $\quad P_2 - P_1 = 7.4$ psi

$V_1 \simeq 0 \quad V_2 = ?$

Using Bernoulli's eqn. and moody Diagram and assuming a friction factor (f) and using a relative roughness $\frac{K}{D}$

$$\frac{K}{D} = \frac{0.000005}{.56} \text{ for smooth pipe } = .0001 \frac{ft}{ft}$$

JHH

7 AUG 79

$$\frac{V_2^2}{2g} = \frac{\Delta P}{\gamma} - f\frac{V_2^2}{2g}\frac{L}{D}$$

$$\frac{V_2^2}{2g} + f\frac{V_2^2}{2g}\frac{L}{D} = \frac{\Delta P}{\gamma}$$

$$\frac{V_2^2}{2g}\left(1+\frac{f\,L}{D}\right) = \frac{\Delta P}{\gamma}$$

$$\frac{V_2^2}{2g} = \frac{\Delta P}{\gamma}\left(1+\frac{fL}{D}\right)^{-1}$$

assuming a friction factor of .03

$$\frac{V_2^2}{2g} = \frac{7.4\times144}{64}\left(1+.03\left(\frac{6}{.56}\right)\right)^{-1}$$

TRY w/new f

$$\frac{V_2^2}{2g} = 12.6$$

$$V_2 = 28.5\ \text{ft/sec}$$

$$R_D = \frac{28.5\left(\frac{.56}{12}\right)}{1.15\times10^{-5}} = 1.2\times10^{5}$$

from Moody diagram

$$\boxed{f = .019}$$

$$\boxed{V_2 = 30\ \text{ft/sec}}$$

$$R_D = 1.2\times10^{5}$$

OK

JHH

7AUG79

Since $Q = VA$

$$Q = 30\ \text{ft/sec}\left(\tfrac{1}{8}\times 2\right)\times\left(\frac{\text{ft}^2}{144\,\text{in}^2}\right) = .052\,\frac{\text{ft}^3}{\text{sec}}$$ for each gap

for 60 shoes the total volumetric leakage will be:

$$Q_{TOT} = 60\left(.052\,\frac{\text{ft}^3}{\text{sec}}\right) \simeq \boxed{3\,\frac{\text{ft}^3}{\text{sec}}}$$

Since the flow through the CWP will be 4600 ft3/sec the percentage of leak flow will be:

$$\frac{3}{4610}\times 100 = .07\%$$

This value is acceptable as long as the leaks in the upper 1000 ft. of pipe do not exceed:

$$115\,\frac{\text{ft}^3}{\text{sec}} - 3\,\frac{\text{ft}^3}{\text{sec}} = \boxed{112\,\frac{\text{ft}^3}{\text{sec}}}$$

APPENDIX B

DYNAMIC SPHERICAL SEAL DESIGN

SKETCHES & LIST OF MATERIALS

JHH

1

1 Aug 79 OTEC 10-40 BALL SEAL

In one (1) complete cycle the ball will rotate from position 1 to position 2 to position 1, then to position 3 and back to position 1 again.

The total arc length each outermost shoe can see in the 30yr. life time is:

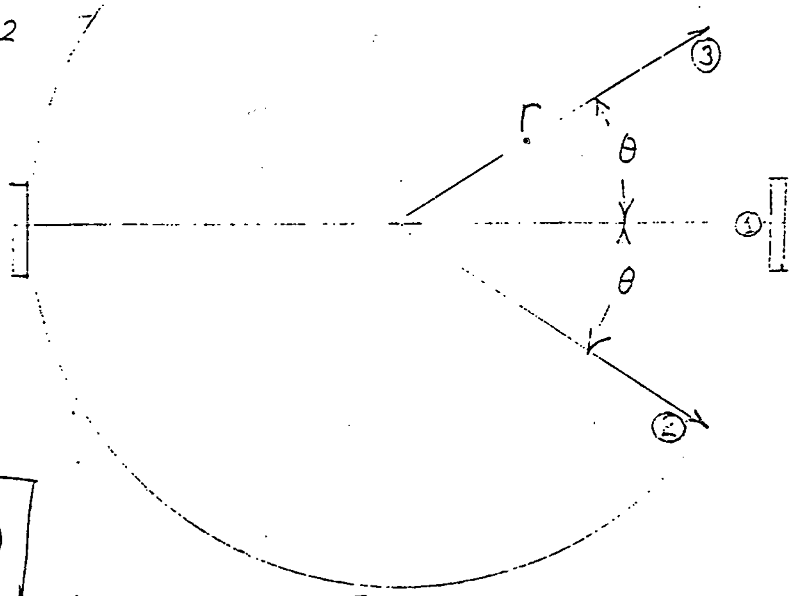

Fig. 1

$$(1)\quad \boxed{L_{arc} = \frac{4r\theta}{cycle} \times \frac{a \text{ cycles}}{\text{lifetime}} \quad (ft.)}$$

$\theta \equiv$ angular displ. (radians)

$a \equiv$ # of cycles

$r \equiv$ radius of sphere = 19 ft.

This distance, L_{arc}, is the maximum travel distance a pair of outermost shoes can see in the lifetime of the CWP.

Jeff Hinz

Aug 1, 1979

Assuming: one complete cycle every 1.5 min. for 30 yrs.

$$30\,yrs \times \frac{365\,days}{yr} \times \frac{24\,hr}{day} \times \frac{60\,min}{hr} \times \frac{cycle}{1.5\,min} = 1.1 \times 10^{7}\ cycles$$

The max. angular rotation of the sphere is extimated at 25° from vertical

From Figure 1 the distance the ball will rotate in one (1) cycle is:

$$d = 4 r \theta \quad (ft.) \qquad \text{choosing } \theta_{AVE.} = \frac{25^{\circ}}{2} = 12.5^{\circ}$$

$$d = 4(19\,ft.)\left(12.5^{\circ} \times \frac{radian}{57.3^{\circ}}\right) = 16.6\ ft.$$

the average velocity of the ball during a cycle is:

$$V_{AV.} = \frac{16.6\,ft}{1.5\,min} = 11.1\,\frac{ft.}{min.}$$

The wear of a typical Teflon shoe is:

$$(1) \qquad \boxed{t = KPVT} \qquad \text{(from ref. \#1)}$$

where:

t = wear, in.

K = wear factor, $\frac{in.^3 - min.}{lb. - ft. - hr.}$

P = pressure, psi

V = Velocity, f.p.m.

T = time, hr.

JHH

2 AUG 79

For the relative velocity on the teflon shoe in this application, 11.1 ft/min., the PV limit for 15-25% glass fiber filled teflon is:

$$PV = 10{,}000\ \frac{lb}{in^2}\ \frac{ft}{min} \quad @ \quad 70^\circ\text{-}80^\circ F$$

The wear on a typical shoe as a function of pressure is: (from equa. 1)

$$t = \left(13\times10^{-10}\ \frac{in.^{\cancel{3}}\text{-}\cancel{min.}}{\cancel{lb}\text{-}\cancel{ft}\text{-}\cancel{hr}}\right)\left(11.1\ \frac{ft}{\cancel{min}}\right)\left(262{,}800\ \cancel{hrs}\right) P\left(\frac{\cancel{lbs.}}{in^2}\right)$$

$$t = 3.8\times10^{-3}\ P \quad (in.) \quad \text{in 30 yrs.}$$

but $PV = 10{,}000$ and $V = 11.1\ ft/min$

$$P = \frac{10{,}000}{11.1} = 901\ psi \quad (\text{Limiting Pressure})$$

$$t = 3.8\times10^{-3}\,(901) = 3.4\,(in) \quad \text{in 30 yrs.}$$

Since the maximum ΔP the teflon shoe sees will be 7.2 psi (given) the wear in 30 yrs. is:

$$t = 3.8\times10^{-3}\,(7.2) = .027\ in.$$

or approx. 1 mil/year

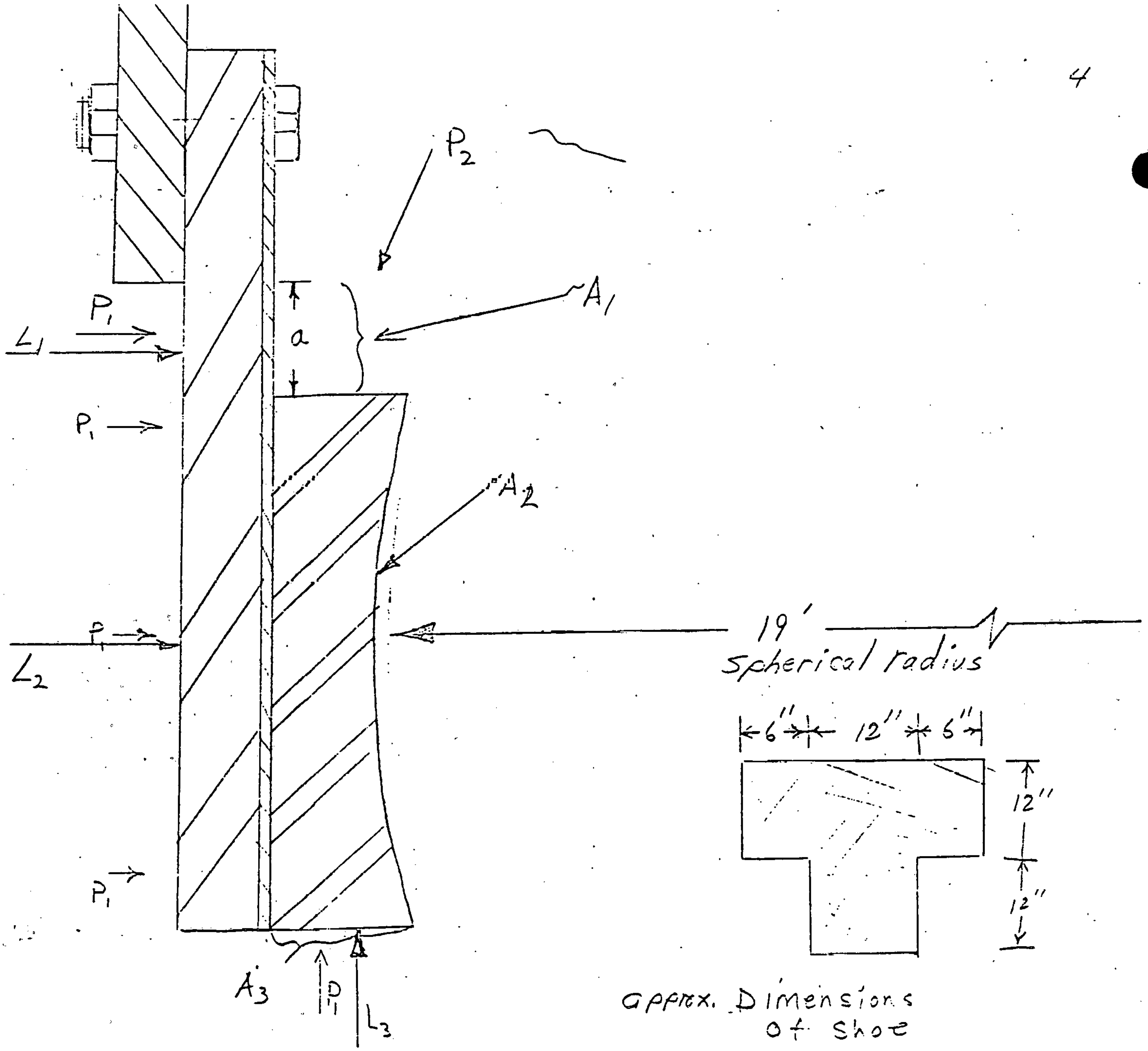

approx. Dimensions of Shoe

$P_1 \equiv$ external press.
$P_2 \equiv$ internal press.
$A_2 \equiv$ Seal face area
$A_1 \equiv$ boot area above shoe (non rigid)

Fig. 2

$A_3 \equiv$ bottom shoe area

$$A_2 = (24'' \times 24'' - 2 \times 6'' \times 12'') = 432 \ \mathrm{in}^2/\mathrm{shoe}$$

$$A_3 = 2'' \times 24'' = 48 \ \mathrm{in}^2/\mathrm{shoe}$$

$$A_1 = \frac{2\pi (19' \times 12'')(a'')}{60 \text{ shoes}} = 23.9\,a \ \mathrm{in}^2/\mathrm{shoe}$$

These wear values are with an average wear factor of $13 \times 10^{-10} \frac{in.^3\text{-}min.}{lb.\text{-}ft.\text{-}hr.}$ on carbon or stainless steel with a 12-20 micro-inch finish. (see ref. 1)

To grind a 38 ft. diameter sphere to this surface finish is impractical so the Teflon shoe will be wearing at a faster rate than predicted.

Forces on Teflon shoe (see Fig. 2)

The teflon shoe will experience forces due to the ΔP across the seal (compressive). The shoe will also experience upward or downward forces due to friction between the ball and the shoe as the ball rotates.

ΔP loads on shoe

(1) Δp load on boot just above shoe (shoe sees ½ this load approx.)

$$L_1 = \Delta P A_1 = 7.2\,(23.9\,a)\tfrac{1}{2}$$

let a = 4"

$$\boxed{L_1 = \overrightarrow{344}\ \text{lbs/shoe}}$$

(2) Δp load on shoe (face)

$$L_2 = \Delta P A_2 = 7.2\,\frac{lbs}{in^2} \times \frac{432\,in^2}{shoe} = \boxed{3\overrightarrow{110}\ \frac{lbs.}{shoe}}$$

(3) Δp load on shoe (bottom)

$$L_2 = \Delta P A_3 = 7.2\,(48) = \boxed{346\ \text{lbs/shoe} \uparrow}$$

The upward or downword force on the shoe support finger and on the boot due to friction forces on the shoe are:

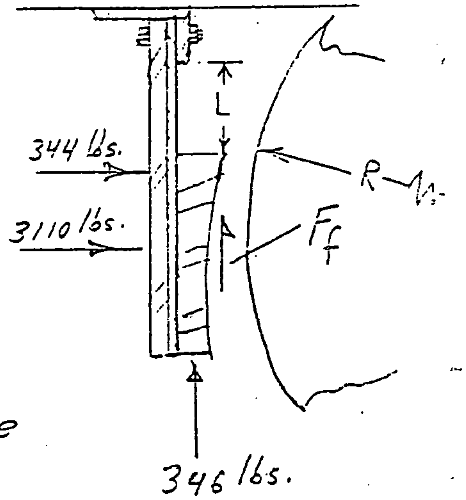

dynamic coeff. of friction

$$F_f = \mu\,(344 + 3110)\ \text{lbs.}$$

where $\mu \approx 0.21$ (see ref. 1)

$$F_f = (.21)(3454) = \boxed{725\ \frac{\text{lbs.}}{\text{shoe}}}$$

The shoe support finger and the seal boot must be able to withstand buckling from this force.

Treating each finger as a column fixed at both ends, the critical length is:

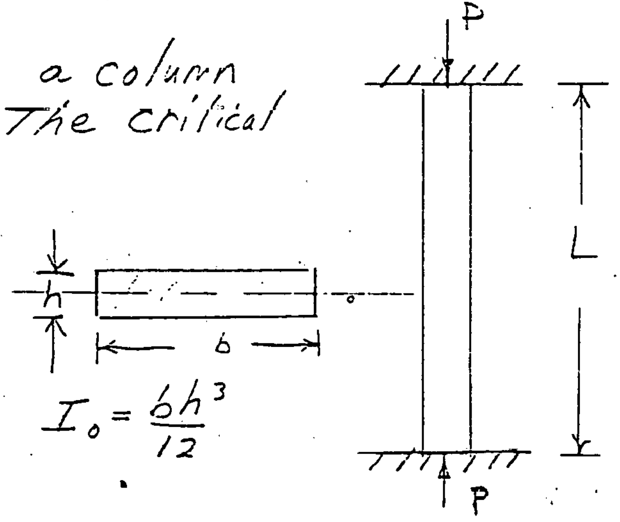

$$L_{cr}^2 = \frac{4\pi^2 EI}{P}$$

$$I_o = \frac{bh^3}{12}$$

$$L_{cr} = \left(\frac{4\pi^2 (30\times10^6)}{(725)}\frac{(bh^3)}{(12)}\right)^{\frac{1}{2}}$$

$$L_{cr} = \left(1.36\times10^5\, b\, h^3\right)^{\frac{1}{2}}$$

* L_{cr} (in)	b (in)	h (in)	L_{cr} with s.f. of 2
40	6	.125	20 in.
33	4	.125	16.5 in.
46	8	.125	23 in.

* for these conditions L_{cr} must not be longer than calculated value.

APPENDIX B

DYNAMIC SPHERICAL SEAL DESIGN SKETCHES & LIST OF MATERIALS

Jeff Hintz

1 Aug 79 OTEC 10/40 CWP spherical seal

<u>Given</u>:

(1) 38' O.D. sphere to be sealed

(2) 1 cycle every 1.5 min. for 30 yrs.

(3) Max. ΔP across seal of 7.2 psi

(4) sketch of ball seal position relative to OTEC 10/40 platform

OTEC 10-40

DYNAMIC SPHERICAL SEAL

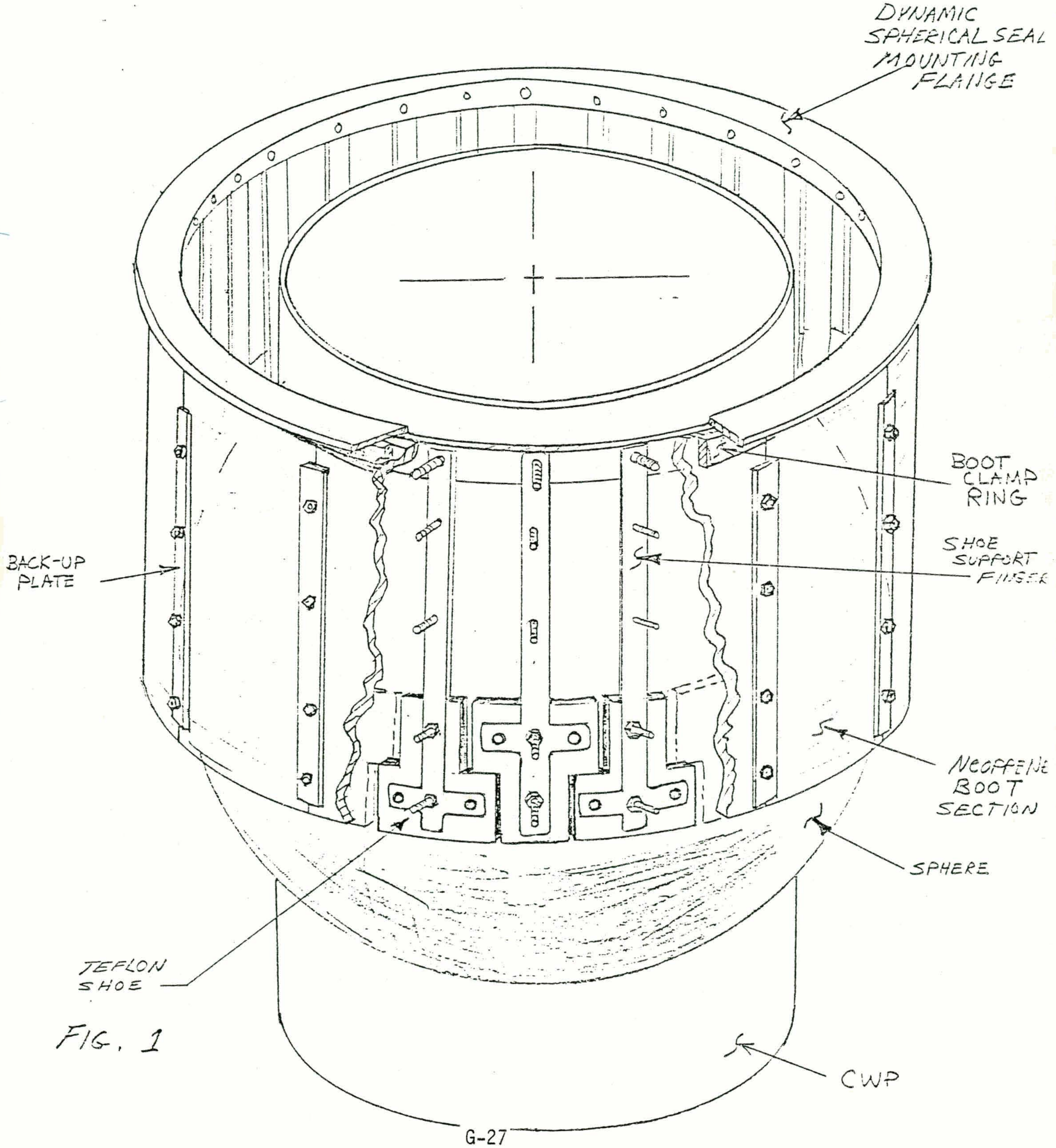

FIG. 1

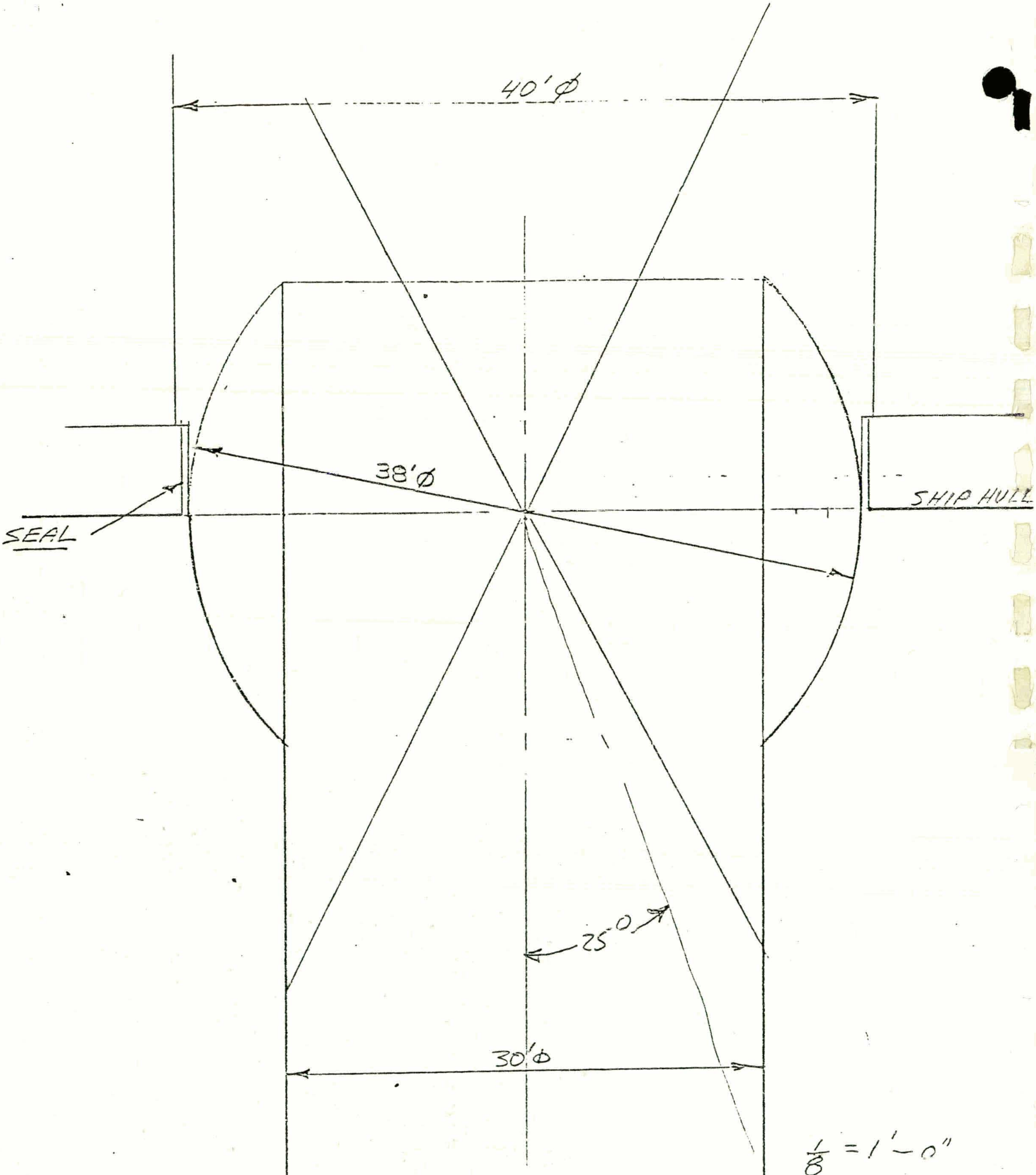

FIGURE 2 SEAL/SPHERE/SHIP RELATIONSHIP

JHH

3 AUG 79

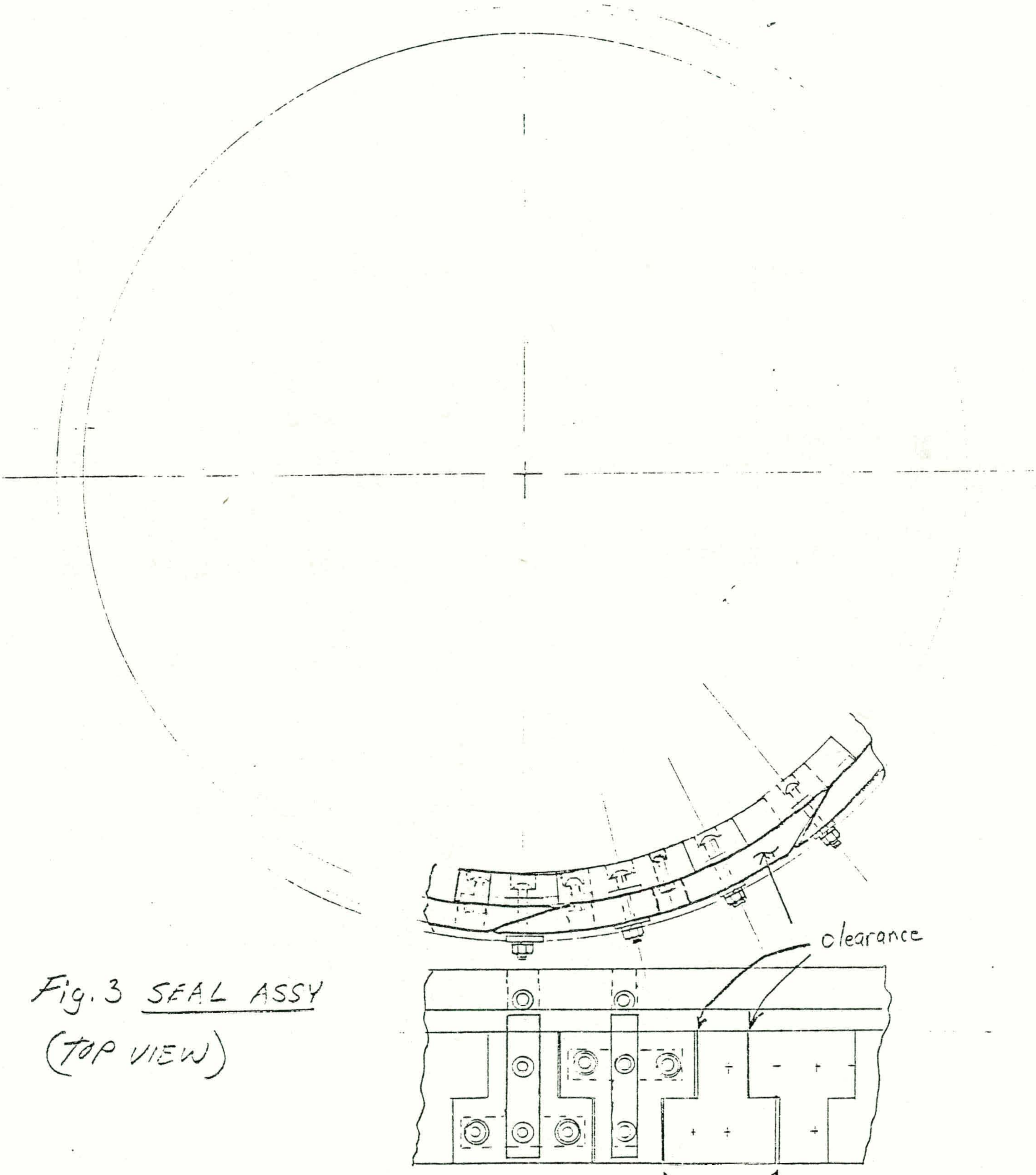

Fig. 3 SEAL ASSY
(TOP VIEW)

NOT TO SCALE

JHH

3 AUG 79

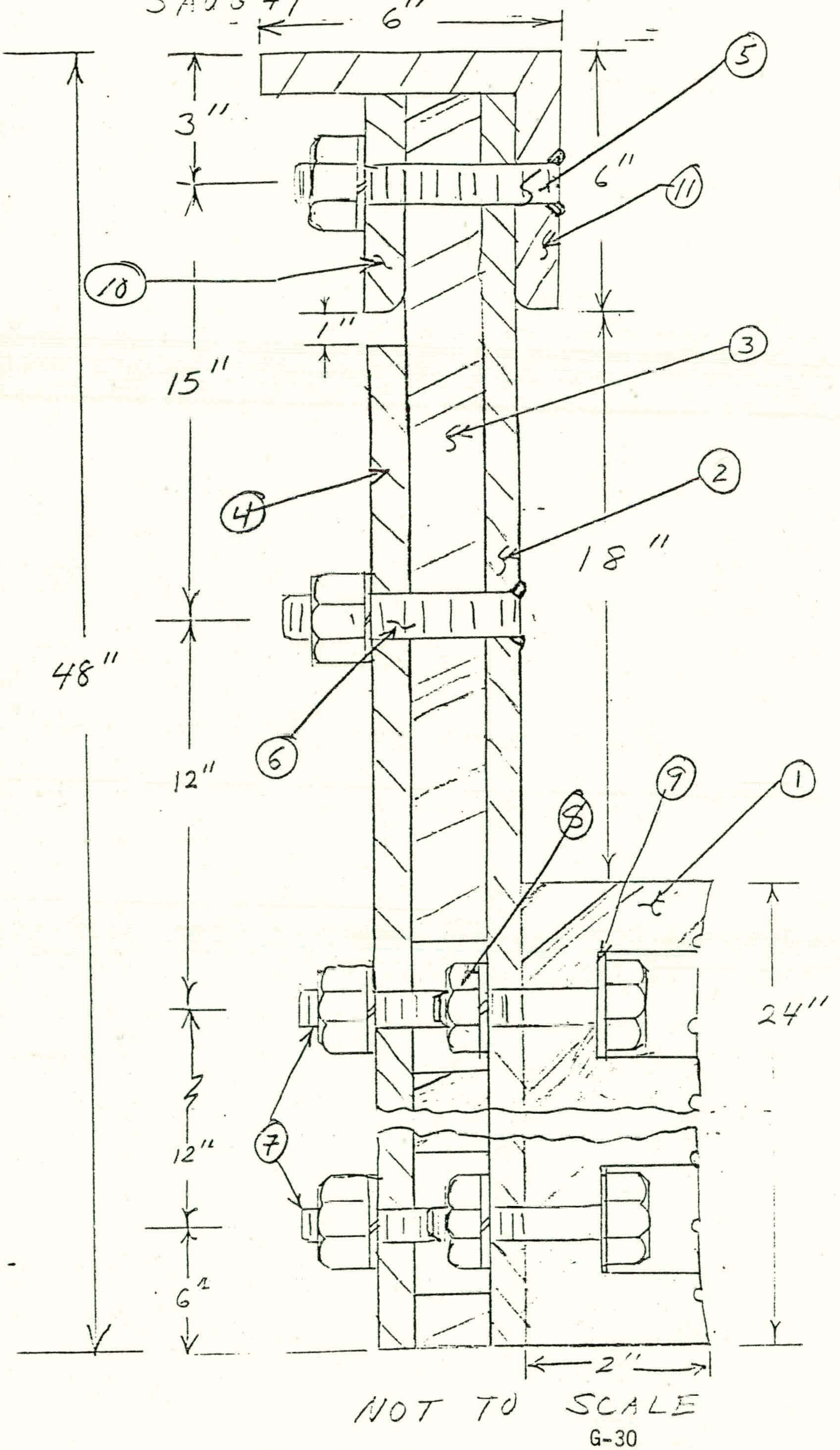

Figure 4

Cross Section of DSS Assembly

① 25% glass filled
Teflon shoe (Fi

② Support finger
(see Fig. 6)

③ 1" Thick neopre
boot (see fig. 7.)

④ backing plate
(see Fig. 8)

⑤ STUD 1"-8 X 3" S.
& 1"-8 Hex nut &
Lock washer S.

⑥ STUD $\frac{3}{4}$"-10 X 2$\frac{1}{4}$" S.S
& $\frac{3}{4}$"-10 Hex nut
& Lock washer

⑦ BOLT - $\frac{3}{4}$"-10 X 3$\frac{1}{2}$
& $\frac{3}{4}$"-10 Hex nut S
& Lock washer

⑧ Jam nut - $\frac{3}{4}$"-10
& Lock washer

⑨ Flat washer - $\frac{3}{4}$"

⑩ CLAMP RING (see f

JHH

3 AUG 79 OTEC 10/40 Spherical Seal

TYPICAL SEAL SHOE -NOT TO SCALE
(60 shoes TOTAL)

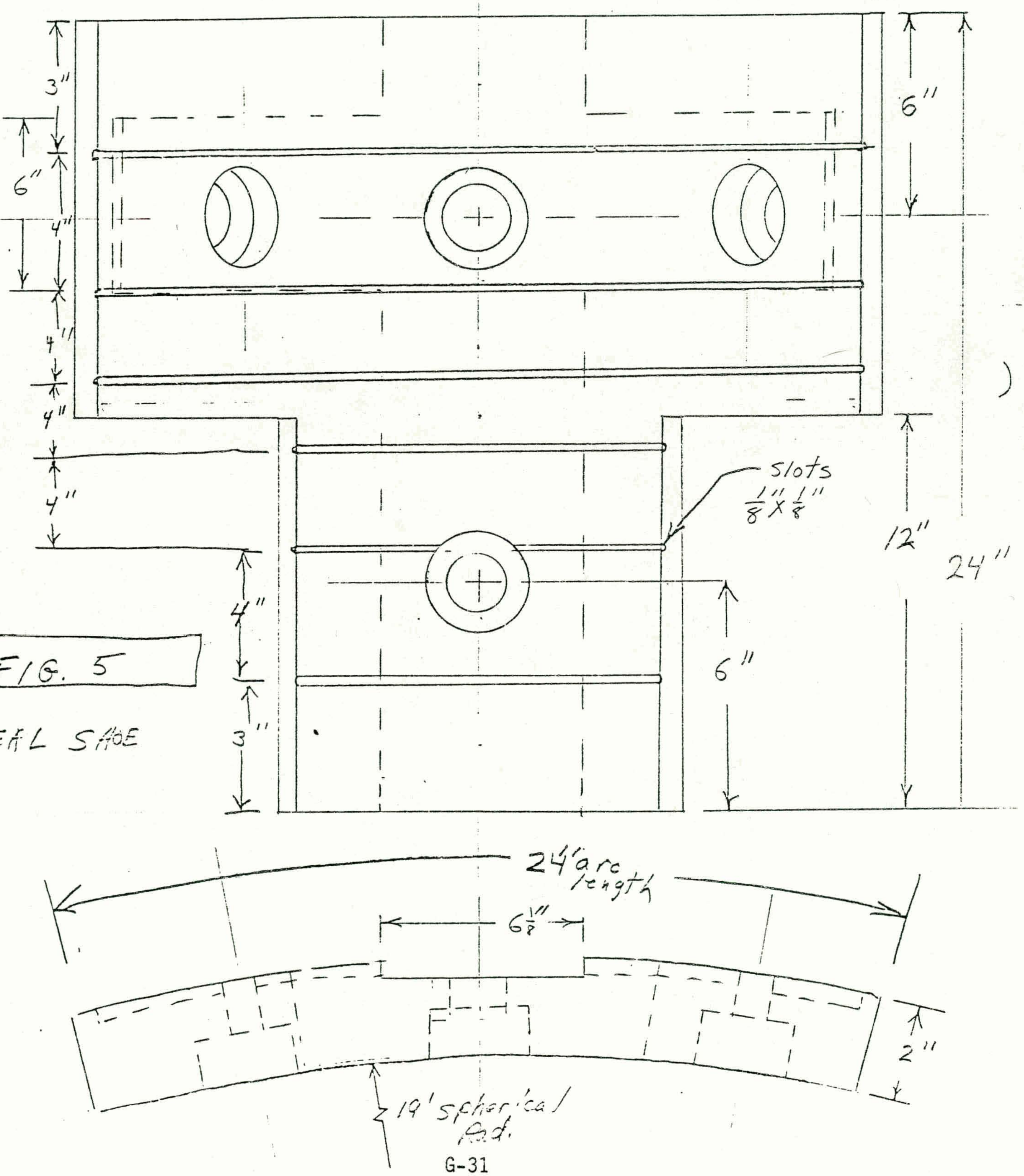

FIG. 5

SEAL SHOE

JHH

3 AUG 79

SEAL SHOE SUPPORT FINGERS

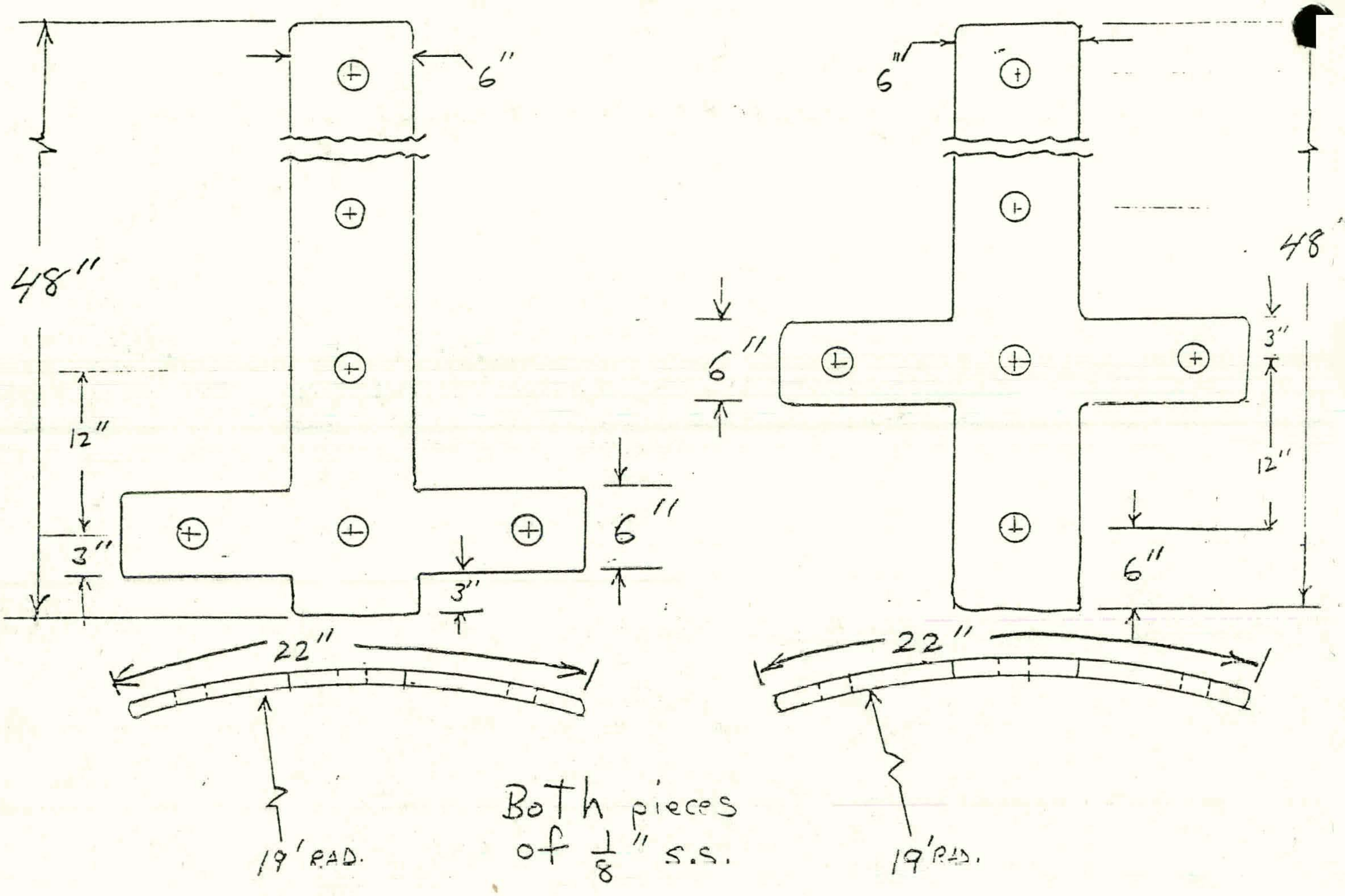

Both pieces of $\frac{1}{8}$" S.S.

Type 1

Type 2

NOT TO SCALE

Fig. 6

JAH

3 AUG 79

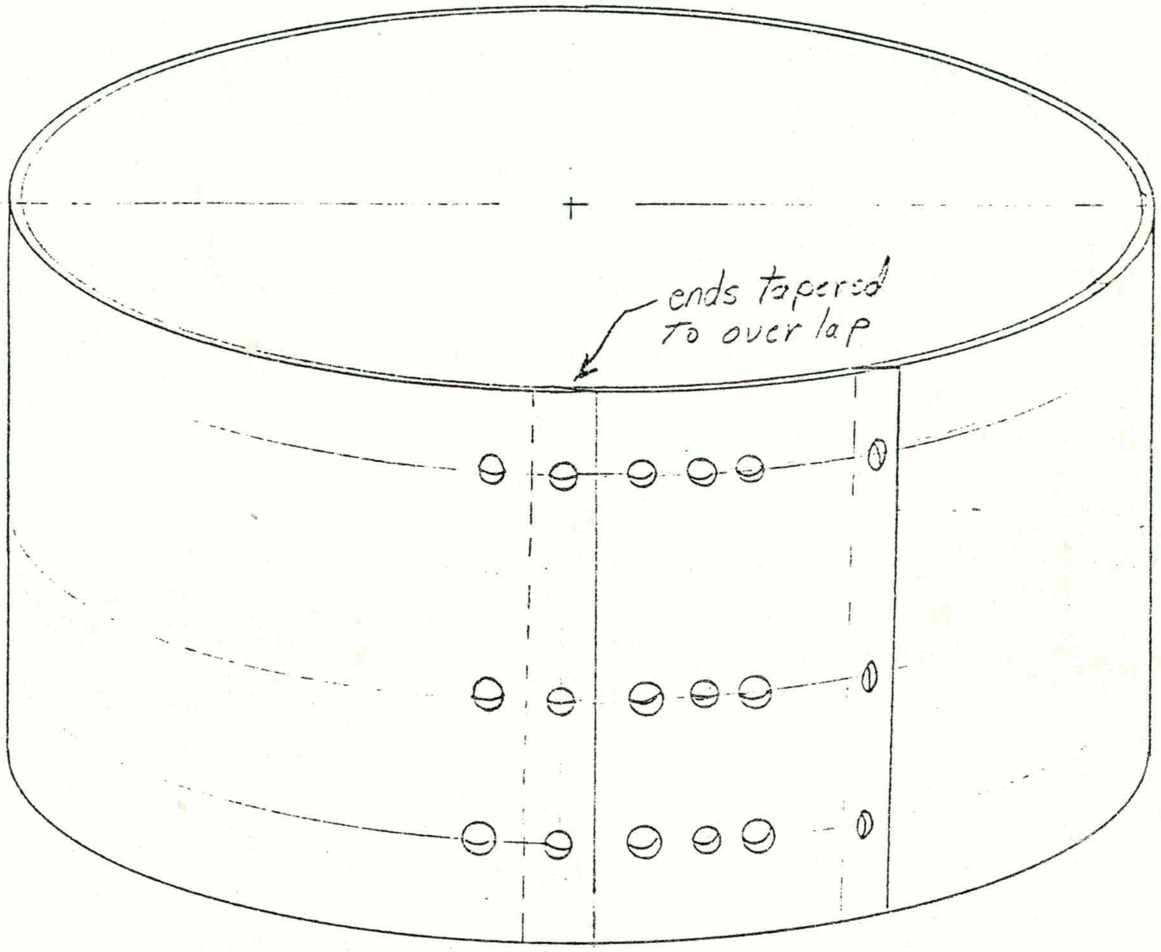

FIG. 7

SEAL BOOT

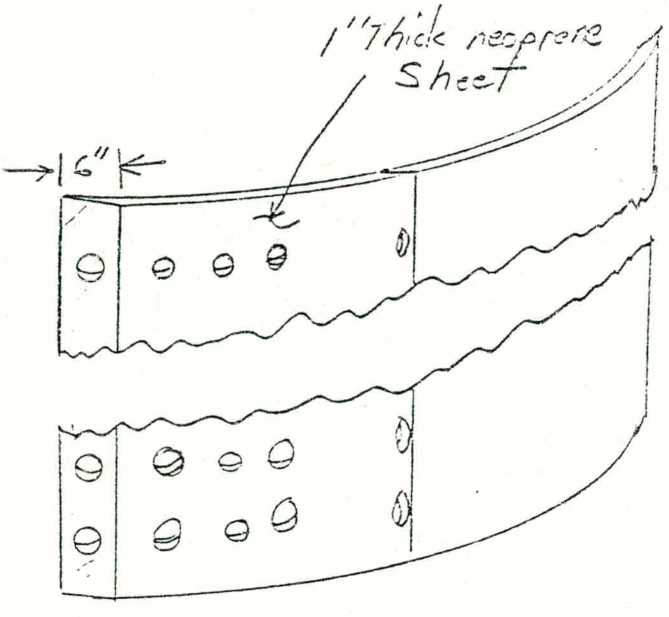

JHA

3AUG79

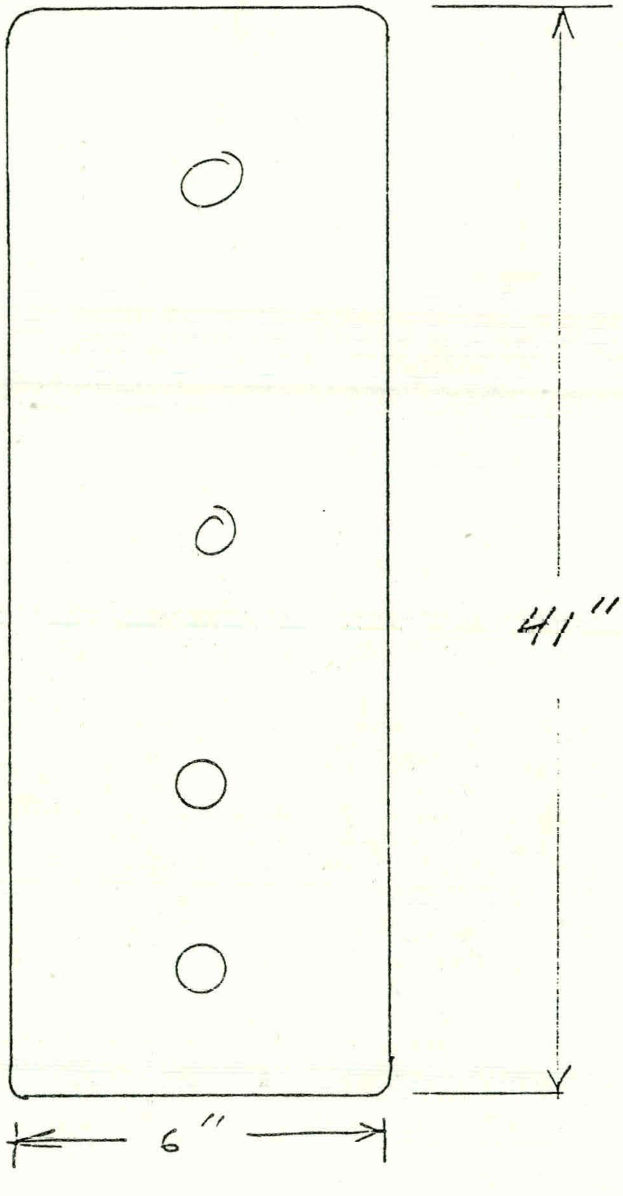

Fig. 8 shoe/BOOT Backing plate

NOT TO SCALE

Jeff Hintz

7AUG79 OTEC 10-40 CWP $\overset{2}{\text{spherical}}$ $\overset{1}{\text{seal}}$

LIST OF MATERIALS

QUANT.	ITEM DESCRIPTION	WT./ITEM
60	2'x2'x2" Teflon Shoes (25% glass filled)	92 lbs.
30	Type 1 shoe support fingers $\frac{1}{8}$" ℞ s.s. 384in²	13.3 lbs.
30	Type 2 shoe support fingers $\frac{1}{8}$" ℞ s.s. 384in² $\frac{5 lbs}{ft^2}$	13.3 lbs.
1	Seal / boot 60 duro 1" Thick neoprene x 3 ft x 121 ft. (54 yd²)	2581 lbs.
60	shoe/boot back up plate $\frac{1}{8}$" X 6" x 31" S.S.	6.5 lbs.
60	STUD 1"-8 x 3" S.S.	
60	HEX NUT 1"-8 S.S.	
60	Lockwasher 1" S.S	
60	STUD 3/4"-10 X2$\frac{1}{4}$" SS. NOTE! SS≡ STAINLESS steel	

LIST of Materials Cont'd.

Quant	ITEM		
60	HEXNUT $\frac{3}{4}$"-10 S.S.		
60	Lockwasher $\frac{3}{4}$" S.S.		
120	BOLT $\frac{3}{4}$"-10 X $3\frac{1}{2}$" SS.		
120	Hexnut $\frac{3}{4}$"-10 S.S.		
120	Lockwasher $\frac{3}{4}$" S.S.		
120	JAMNUT 3/4"-10 S.S.		
120	Flatwasher 3/4" S.S.		
120	Bolt $\frac{3}{4}$"-10 X 2" S.S.		
120	Hexnut $\frac{3}{4}$"-10 S.S.		
120	Lockwasher $\frac{3}{4}$" S.S.		
120	Flatwasher $\frac{3}{4}$" S.S.		
1	Ring $\frac{1}{4}$"X$5\frac{1}{2}$" X 19.5' rad.) (Round) A-36 steel	573 lbs.	10.2 lbs/ft2
1	Angle Ring ∠ 6"X6"X$\frac{1}{2}$" x19.25'rod (Round)	2371 lbs.	19.6 lbs/ft.

APPENDIX H

GMDI

OTEC 10/40 CWP TECHNICAL REPORT OF
AT - SEA DEPLOYMENT LOADS -
SURFACE TOWING LOADS

11 SEPTEMBER 1979

PREPARED FOR TRW

GLOBAL MARINE DEVELOPMENT INC.
2302 Martin Street
Irvine, California 92715

THIS PAGE

WAS INTENTIONALLY

LEFT BLANK

RPT-4087-003
REVISION 0
12 SEPT 79

OTEC 10/40 CWP
TECHNICAL REPORT OF AT - SEA DEPLOYMENT LOADS - SURFACE TOWING LOADS

(J.O. 04087 - 041200)

12 SEPTEMBER 1979

PREPARED BY: W. A. Watts
J. W. Cearly

APPROVED BY: J. C. Schaff
J.C. SCHAFF
PROJECT MANAGER

Y. Ozudogru
Y. Ozudogru
Manager S/NA

S. Wetmore
V.P. Engineering

DOCUMENT NO. RPT-4087-003

GLOBAL MARINE DEVELOPMENT INC.

Newport Beach, Calif.

REVISION RECORD

REV	DATE	AUTHORIZATION	CHANGE DESCRIPTION	PAGES AFFECTED
0	9/12/79	S.B. WETMORE	INITIAL RELEASE EDC RELEASED 9-12-79	ALL

TABLE OF CONTENTS

APPENDIX

1.0 ABSTRACT

The FRP/BALSA Cold Water Pipe alternative for the OTEC 1040 is examined in order to determine the maximum stress and required towing force during surface or subsurface towing operation. The pipe has an inside diameter of 30 feet and is constructed of 3/4" fiber-reinforced plastic inner and outer walls with a 2 inch layer of balsa wood between them. Calculations are based on conservative assumptions to show that the pipe will not be subjected to the maximum allowable stress.

2.0 OBJECTIVES

The purpose of this study is to determine if the proposed pipe has the structural strength to enable it to be towed in an open sea with out failing. The two modes of towing are considered, these being floating with the ends capped and submerged with the pipe flooded. Modes of failure considered are due to longitudinal bending, local bending, and dynamic loading. In addition, the required towing force must be determined.

3.0 DESIGN REQUIREMENTS

Sea state data for the site shows the significant wave height remains below 6 feet 88.1 per cent of the time. Since the maximum wave height per thousand for this sea state is 11.55 feet, statistically, a conservative design criterion of a 12 foot regular wave train has been chosen. The Bretschneider period for this wave is $\sqrt{12/0.222}$ = 7.35 seconds.

The fiber-reinforced-plastic has a flexural modulus of 2.5 X 10^6 psi and a maximum allowable stress of approximately 20000 psi. Neglect the balsa wood in all strength calculations.

The towing speed of 6 knots used as a criterion includes the surface current, regardless of direction.

4.0 SUMMARY OF RESULTS

In a sea state with a 6 foot significant wave height and 12 foot maximum wave heights the pipe line under tow will sustain maximum longitudinal bending stresses of 11,023 psi. In addition to this stress, a local stress will occur due to the hydrostatic head of water at the crest of each wave. This local stress was calculated by approximate conservative methods and found to be about 7,895 psi. The Combined stress which may occur is about 18,900 psi.

Buckling stability have not been performed due to the complexity of the calculations and the preliminary nature of this report. The stresses calculated are within the acceptable range for the pipe and it is concluded that the pipe may be safely towed in the given sea state.

Towing forces required will be in the range of 50,000 lbs for surface tow and 100,000 lbs for a subsurface tow.

A maximum dynamic loading of about 3,000 lbs /ft length of pipe will occur at the wave trough. This is the point of minimum local stress due to hydrostatic load and will produce stress lower than 8,000 psi.

Towing the pipe in seastates with lower significant wave heights will cause all the above stresses to decrease appreciable amounts. In practice the pipe would be deployed at a more favorable condition then that assumed for these calculations.

5.0 TECHNICAL DISCUSSION

The pipe is analyzed as a flexible beam supported on a sinousoidal wave 12 feet high 277 feet long. The maximum bending moment is determined by balancing the pipe weight against the buoyancy derived from the pipe submerging.

The maximum local stress due to a hydrostatic head is determined by methods defined in reference 1.

Dynamic loadings are calculated due to added mass entrained as the pipe heaves in the vertical direction.

Towing forces are determined considering friction drag and pressure drag acting on the submerged portion of the pipe.

All calculations and methods to determine the required loads and stresses are detailed in the appendix.

6.0 REFERENCES

1. Astronautics Structures Manual, Volume 1, dated 15 September 1961.

APPENDIX A

SUPPORTING CALCULATIONS

CALCULATIONS

LOCAL BENDING SECTION MODULUS

LOADS ARE BASED ON A ONE FOOT LENGTH OF PIPE.

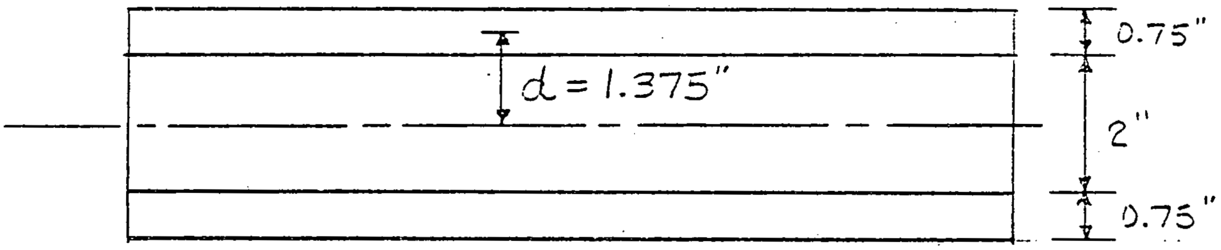

$$I = Ad^2 = 2(0.75")(12")(1.375")^2 = 34.03 \text{ IN}^4$$

$$\frac{I}{c} = \frac{34.03 \text{ IN}^4}{1.75 \text{ IN}} = \underline{\underline{19.45 \text{ IN}^3}}$$

OVERALL BENDING SECTION MODULUS

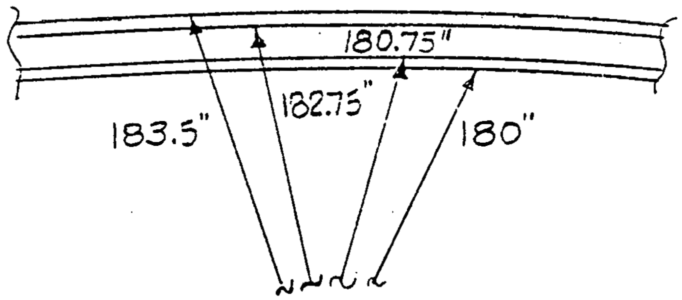

$$I = \frac{\pi}{4}\left[(183.5")^4 - (182.75")^4 + (180.75")^4 - (180")^4\right]$$

$$= 28.3 \times 10^6 \text{ IN}^4$$

$$\frac{I}{c} = \frac{28.3 \times 10^6 \text{ IN}^4}{183.5 \text{ IN}} = \underline{\underline{15420 \text{ IN}^3}}$$

PIPE WEIGHT

FRP DENSITY : 0.065 LBS/IN^3
BALSA DENSITY : 17 LBS/FT^3

FRP WEIGHT =

$$\pi\left[(183.5\,\text{IN})^2-(182.75\,\text{IN})^2+(180.75\,\text{IN})^2-(180\,\text{IN})^2\right]\times(12\ \text{IN/FT})(0.065\ \text{LBS/IN}^3) = 1336.10\ \text{LBS/FT}$$

BALSA WEIGHT =

$$\pi\left[(182.75\,\text{IN})^2-(180.75\,\text{IN})^2\right]\frac{(17\ \text{LBS/FT}^3)}{(144\ \text{IN}^2/\text{FT}^2)} = 269.63\ \text{LBS/FT}$$

TOTAL WEIGHT = 1605.73 LBS/FT

STILL WATER DRAFT

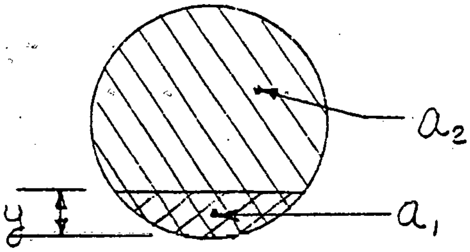

RADIUS = R = 15.29 FT

TOTAL DISPL. = $\rho g \pi R^2$ = $(63.96)(\pi)(15.29)^2$ = 46987.35 LBS/FT

$$\frac{a_1}{a_2} = \frac{1605.73}{46987.35} = 0.034174$$

$$a_1 = (0.034174)(\pi)(15.29\,\text{FT})^2 = 25.10\ \text{FT}^2$$

$$a_1 = R^2\cos^{-1}\left(\frac{R-y}{R}\right) - (R-y)\sqrt{2Ry-y^2} = 25.10$$

$$25.10 = 233.84\cos^{-1}\left(\frac{15.29-y}{15.29}\right) - (15.29-y)\sqrt{30.58y-y^2}$$

$$y = 2.30\ \text{FT}$$

DETERMINATION OF MEAN DRAFT

THE STILL WATER DRAFT OF THE PIPE WITH CAPPED ENDS IS 2.50 FEET. DUE TO THE NON LINEAR RELATIONSHIP BETWEEN DRAFT AND DISPLACEMENT, THE PIPE PERCHED UPON A REGULAR WAVE TRAIN HAS A DIFFERENT MEAN DRAFT THAT IS DEPENDENT ON WAVE HEIGHT AND PERIOD. THE FOLLOWING ANALYSIS IS USED:

$$a = R^2\cos^{-1}\left(\frac{R-y}{y}\right) - (R-y)\sqrt{2Ry - y^2}$$

$$\rho g = (1.988)(32.174) = 63.96 \ \text{LBS/FT}^3$$

@ 69° F.

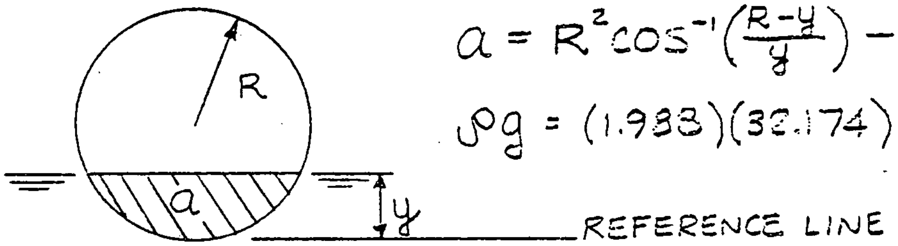

LET T = HEIGHT OF MEAN WAVE LINE.

ϕ = ANGLE BETWEEN PIPE LONGITUDINAL AXIS AND DIRECTION OF WAVE PROPAGATION.

$$\text{WAVE NUMBER} = \frac{4\pi^2}{gT^2} = \frac{4\pi^2}{(32.174)(7.35)^2} = 0.0227 \ \text{FT}^{-1}$$

$$\therefore \quad y(x) = T + 6\cos(0.0227\cos\phi \cdot x)$$

BUOYANCY LOAD AT ANY x IS $B(x)$ LBS/FT

$$B(x) = \rho g\, a(x)$$
$$= 63.96\left[R^2\cos^{-1}\left(\frac{R-y(x)}{R}\right) - (R-y(x))\sqrt{2Ry(x)-y^2(x)}\right]$$

$$y \le 0 \implies B(x) = 0$$

TOTAL PIPE WEIGHT =
$(1605.73 \text{ LBS/FT})(3000 \text{ FT}) = 4,817,190 \text{ LBS}$

VIA COMPUTER, VALUES OF T WERE ITERATED TO OBTAIN T SUCH THAT

$$\int_0^{3000} B(x)\,dx = 4,817,190$$

RESULTS:

ϕ (DEG)	T (FEET)	MAX. $B(x)$ (LBS/FT)
0	-0.306	6038
15	-0.391	5908
30	-0.416	5871
45	-0.322	6014
60	-0.424	5859
75	-0.069	6402

I. A. 1) OVERALL BENDING

$$\text{WAVELENGTH} = \lambda = \frac{gT^2}{2\pi} = \frac{gH}{2\pi(0.222)}$$

$$= \frac{(32.174)(12)}{2\pi(0.222)} = 277 \text{ FT}$$

As CONSERVATIVE ASSUMPTIONS, ASSUME THE FOLLOWING:

- TREAT THE PIPE AS A UNIFORMLY LOADED BEAM, SIMPLY SUPPORTED AT THE FREE END UPON A WAVE CREST AND FIXED AT THE FOLLOWING CREST. THE MAXIMUM MOMENT IS THUS $\omega l^2/8$.
-

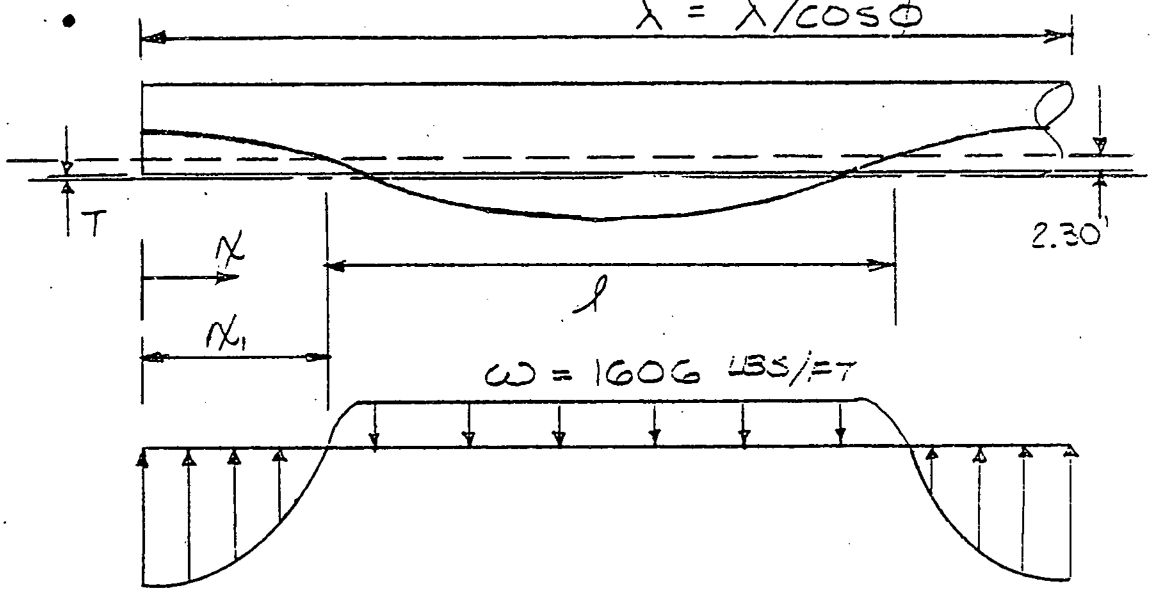

LOADING DIAGRAM

$$l = \lambda' - 2x_1$$

$$\text{MAXIMUM DEFLECTION} = \frac{\omega l^4}{185EI}$$

$x_1 = x$ SUCH THAT
$T + 6\cos(0.0227\, x \cos\phi) = 2.30$

- PIPE IS A RIGID BODY
- $\sigma = \frac{M}{Z} = \frac{\omega l^2/8}{154207}$ LBS/IN^2

RESULTS

ϕ (DEG)	λ' (FT)	x_1 (FT)	l (FT)	MOMENT (10^6 IN-LBS)	σ_{max} (PSI)
0	277	49.5	178	76.3	495
15	287	50.5	186	83.1	539
30	320	56	208	104.2	676
45	392	70	252	153.0	992
60	554	97	360	311.9	2023
75	1070	198.5	673	1091.1	7076

AN EXTRAPOLATION OF THE ABOVE ANALYSIS LEADS TO THE CONCLUSION THAT AT ϕ = 84.7°, WITH EACH END OF THE 3000 FOOT LONG PIPE ON SUCCESSIVE WAVES (UNLIKELY), THE STRESS WOULD BE APPROX. 50000 PSI. HOWEVER, THE PIPE WILL DEFLECT BELOW THE WAVE TROUGH.

ASSUME T ≈ −0.5 FT. IN ORDER FOR THE MEAN DRAFT LINE OF THE PIPE TO BE EVEN WITH THE TROUGH BOTTOM, THE DEFLECTION $\delta = 6 + 0.5 + 2.3 = 8.8$ FEET = 105.6 INCHES

$$\delta_{MAX} = \frac{\omega l^4}{185\,EI} = \frac{(1606)(1728)l^4}{(185)(2.5\times10^6)(23.3\times10^6)} = 105.6$$

$$l = 840 \text{ FT}$$

$$\sigma = \frac{(1606)(840)(12\times840)}{8\,(154207)} = 11023 \text{ PS}$$

<u>OK</u>

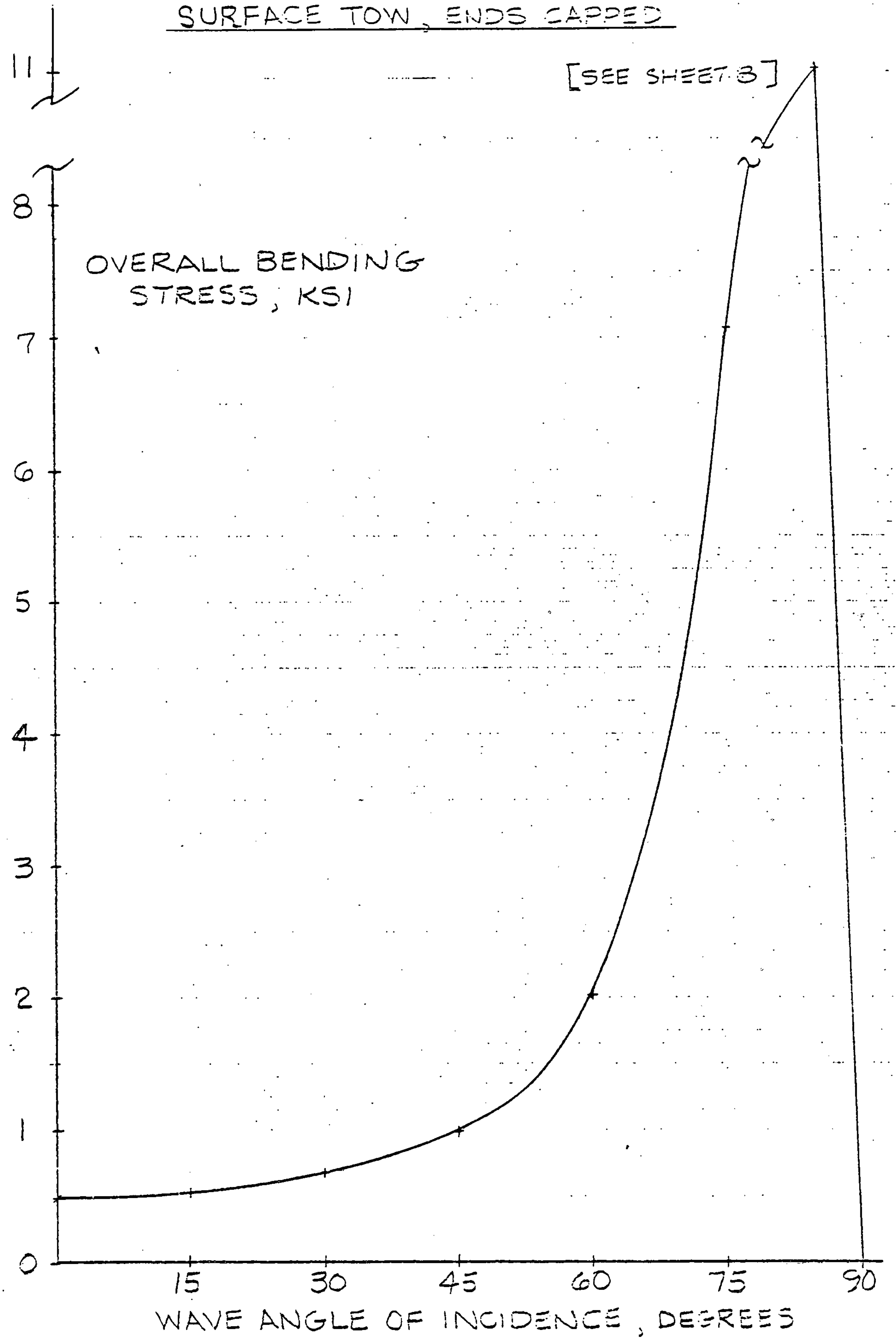
SURFACE TOW, ENDS CAPPED
[SEE SHEET 3]
OVERALL BENDING STRESS, KSI
11
8
7
6
5
4
3
2
1
0
15
30
45
60
75
90
WAVE ANGLE OF INCIDENCE, DEGREES

I. A 2) LOCAL BENDING (STATIC)

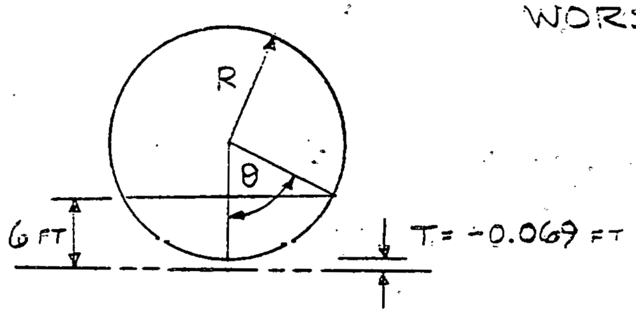

WORST CASE : (SEE SHEET 6)

$$\phi = 75^\circ$$
$$T = -0.069 \text{ FT}$$
$$B = 6402 \text{ LBS/FT}$$

$$6 - .069 = 5.931 =$$

$$5.931 = R(1-\cos\theta) = 15.29(1-\cos\theta)$$
$$\theta = 52.26^\circ = 0.912 \text{ RAD}$$

$$\frac{\pi/2}{0.912} = 1.722$$

$$\therefore \quad 2\int_0^{0.912} P_{max}\cos(1.722\theta)\,R\,d\theta = 6402$$

$$P_{max}\sin\theta\Big|_0^{0.912} = 360.53$$

$$P_{max} = 455.94 \text{ LBS/FT PER FT LENGTH}$$

MAXIMUM MOMENT =

$$M = K_m P_{max} R^2$$

$$K_m = 0.12$$

$$M = (0.12)(455.94)(15.29)^2 = 12794 \text{ FT-LBS}$$
$$= 153524 \text{ IN-LBS}$$

$$\sigma = \frac{M}{Z} = \frac{153524 \text{ IN-LBS}}{19.45 \text{ IN}^3} \quad \text{[SHEET 3]}$$
$$= \underline{\underline{7895 \text{ PSI}}}$$

I. B. DYNAMIC LOADING

WAVE ACCELERATION:

$$a_{MAX} = 1/2\, H\omega^2$$

FROM BRETSCHNEIDER,

$$\frac{H}{0.222} = T^2 = \frac{4\pi^2}{\omega^2}$$

$$\text{SO}\quad \omega^2 = \frac{4\pi^2(0.222)}{H}$$

$$a_{MAX} = (0.5)H \cdot 4\pi^2(0.222)\,/H$$

$$= 4.382 \text{ FT/SEC}^2$$

ADDED MASS:

$$m_A = C_m \pi R^2$$

$$= (1.0)(\pi)(15.29)^2 = 734.6\ \frac{\text{SLUGS}}{\text{FT}}$$

MAXIMUM

FORCE DUE TO HYDRODYNAMIC ADDED MASS $= m_A \cdot a_{MAX} =$ 3219 LBS/FT LENGTH

I. C. TOWING FORCE

ASSUME NET V = 6 KNOTS = 10.13 FT/SEC

STEADY-STATE (NO WAVES):

- FRICTION DRAG —

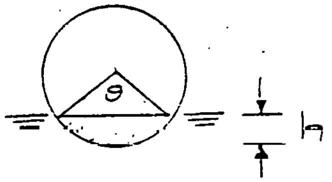

$$\theta = 2\cos^{-1}\left(\frac{R-h}{R}\right) = 2\cos^{-1}\left(\frac{15.29-2.30}{15.29}\right)$$
$$= 1.1112 \text{ RAD}$$

WETTED PERIMETER = $R\theta$ = $(15.29 \text{ FT})(1.1112) = 17.00 \text{ FT}$

AREA = $(3000 \text{ FT})(17.00 \text{ FT}) = 51000 \text{ FT}^2$

$$R_n = \frac{VL}{\nu} = \frac{(10.13)(3000)}{0.9791 \times 10^{-5}} = 3.10 \times 10^{7}$$

$$C_F = \frac{0.075}{(\text{LOG}_{10} R_n - 2)^2} = 1.336 \times 10^{-3}$$

$$F_f = 1/2\,\rho C_F A V^2 = (0.5)(1.988)(1.336 \times 10^{-3})(51000)(102.63)$$
$$= 6955 \text{ LBS}$$

- PRESSURE DRAG —
  FROM SHEET 4, $A = 25.10 \text{ FT}^2$
  $C_D \approx 0.82$ [HOERNER]

$$F_p = 1/2\,\rho C_D A V^2 = (0.5)(1.988)(0.82)(25.10)(102.63)$$
$$= 2101 \text{ LBS}$$

TOTAL DRAG = $F_f + F_p$ = 9056 LBS

ON FACE OF PIPE CAP

+ 10% WAVE DRAG = 9961 LBS

WAVE DRIFT FORCE :

TREAT PIPE AS A SHIP-LIKE VESSEL
AND USE API FORMULAE FOR DRIFT
FORCE IN IRREGULAR SEAS OF
6 FOOT SIGNIFICANT WAVE HEIGHT

$$F = F_{(BOW)} \cdot \frac{2\cos^2\phi}{1+\cos^2\phi} + F_{(BEAM)} \cdot \frac{2\sin^2\phi}{1+\sin^2\phi}$$

$$F_{(BEAM)} = C \cdot H_s^2 B^2 L$$

$H_s = 6$ FT
B = VESSEL BEAM = 30.58 FT
L = VESSEL LENGTH = 3000 FT
T_s = SIGNIFICANT WAVE PERIOD
$= \sqrt{6/0.222} = 5.20$ SEC
$T^* = 0.64 \sqrt{B + 2(\text{DRAFT})}$
$= 0.64 \sqrt{30.58 + 2(2.30)}$
$= 3.8$
$\therefore\ C \approx 8 \times 10^{-4}$
[EXTRAPOLATED]

$$F_{(BEAM)} = (8\times10^{-4})(6)^2(30.58)^2(3000)$$
$$= 81000 \text{ LBS}$$

$$F_{(BOW)} = 0.13\, C \cdot H_s^2 B^2 L$$

$T^* = 0.33\sqrt{L} = 18.1$
$C \approx 0.1 \times 10^{-4}$

$$F_{(BOW)} = (0.13)(0.1\times10^{-4})(6)^2(30.58)^2(3000)$$
$$= 130 \text{ LBS}$$ NEGLIGIBLE !

$$\therefore\ F = 81000 \cdot \frac{2\sin^2\phi}{1+\sin^2\phi} \approx 81000 \sin\phi \text{ LBS}$$

LONG'L COMPONENT =
$F\cos\phi = 81000 \sin\phi \cos\phi$

DUE TO WEATHERVANING, MAXIMUM INSTANTANEOUS LONGITUDINAL WAVE DRIFT FORCE OCCURS AT $\phi = 45°$.

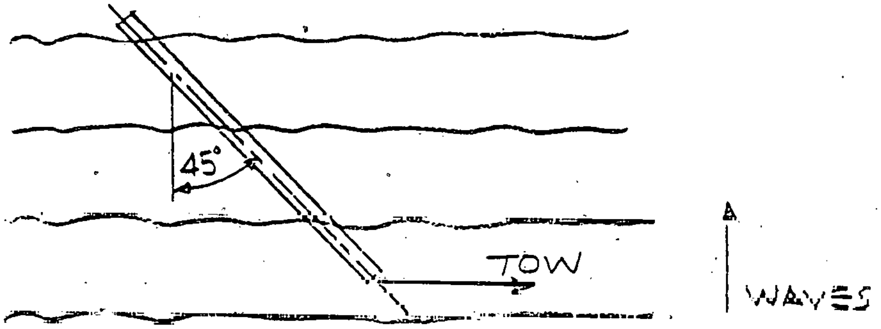

$$81000 \cdot \sin(45°)\cos(45°) = 40500 \text{ LBS}$$

∴ MAXIMUM SURFACE TOW FORCE =

$$9961 + 40500 \approx \underline{\underline{50500 \text{ LBS}}}$$

II. A. STATIC LOADS

DUE TO AN EVEN DISTRIBUTION OF LOADS AND PRESSURES OF A SUBMERGED FLOODED PIPE, THERE IS ASSUMED TO BE NO QUASI-STATIC STRESSES ON THE PIPE. IN THIS CONDITION DUE TO WAVES.

B. DYNAMIC LOADS

APPROXIMATELY SAME AS I B.

II. C. TOWING FORCE

FULLY SUBMERGED (REFER TO SHEET)

- FRICTION DRAG

  $C_F = 1.336 \times 10^{-3}$, AS BEFORE

$F_f = 1/2 \rho C_F \pi D L V^2 =$
$(0.5)(1.988)(1.336 \times 10^{-3})(\pi)(30.58)$([illegible])
$\times (102.69) = 39806$ LBS

- PRESSURE DRAG

  $C_D = 0.82$

$F_P = 1/2 \rho C_D \frac{\pi}{4} D^2 V^2 =$
$(0.5)(1.988)(\pi/4)(30.58)^2(102.68)(0.82)$
$= 61484$ LBS

TOTAL DRAG = $F_f + F_P$ = 100790 LBS

SMC

8/3/79

CWP BENDING STRESS DUE TO WAVE PROFILE

THE MAXIMUM STRESS THE CWP CAN HAVE OCCUR IS LIMITED BY THE SHAPE THE PIPE CAN ASSUME AND THE MINIMUM RADIUS OF CURVATURE THAT CAN OCCUR.

I. A SIMPLIFIED ANAYSIS WILL BE PERFORMED ASSUMING THE PIPE ACTS AS A SIMPLY SUPPORTED BEAM.

PIPE DATA

$r = 183.5$ INCH

$I = 28.3 \times 10^6$ in^4

$E = 2.5 \times 10^6$ lb/in^2

$w = 1763$ LBS/FT $= 147$ LB/IN

Ref: Calculations by Shen & Watts

WAVE DATA

$h = 12$ FT (CREST TO TROUGH)

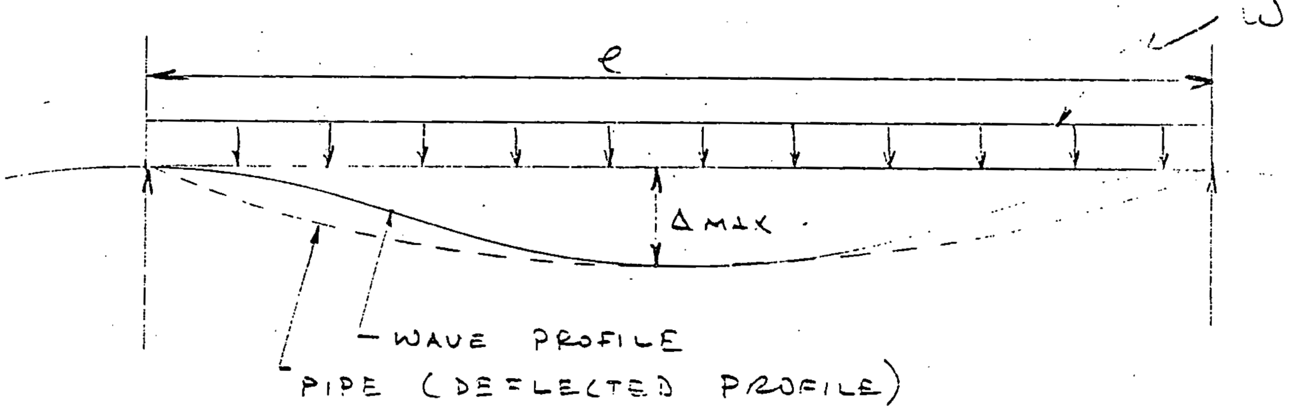

DETERMINE WAVE LENGTH AT WHICH HIGHEST STRESS WILL OCCUR

$$\Delta_{MAX} = \frac{5 w \ell^4}{384 EI} \leq 140 \text{ inch (WAVE HEIGHT)}$$

$$\ell = \left[384 EI \; \Delta_{MAX} \; \frac{1}{5w} \right]^{1/4}$$

APPENDIX I

GMDI

PRELIMINARY ANALYSIS FOR OTEC 10/40 CWP AT SEA DEPLOYMENT UP-ENDING LOADS

30 AUGUST 1979

PREPARED FOR TRW

GLOBAL MARINE DEVELOPMENT INC.
2302 Martin Street
Irvine, California 92715

GLOBAL MARINE DEVELOPMENT INC.

To: Yilmaz Ozudogru **Date:** 5 July 1979

From: Monty Betts Monty Betts

Subject: OTEC 10/40 COLD WATER PIPE DEPLOYMENT FOR STEADY STATE CONDITION

Preliminary analyses have been conducted to determine the relationship between tensile loads maintained in the CWP during deployment and the radius of curvature/bending stresses that result. The analysis presumes that deployment is conducted in near-waveless environment and that body forces but not hydrodynamic forces need be considered. Three CWP designs have been investigated:

1. 30 ft. diameter fiber reinforced plastic (FRP)
2. Bundle of seven 12 ft. diameter polyethylene pipes
3. 30 ft. diameter pipe, neoprene with steel cables.

Table I is a compilation of data used in analyses of these pipes. The characteristics pertinent to these analyses are, primarily, the wet weight/buoyancy per unit length and the relative stiffness of the pipe. The polyethylene and the neoprene/steel designs are very flexible and may be analyzed using catenary equations. The FRP design is stiffer and has been analyzed both by catenary analysis and by simple beam theory. The neoprene/steel design is heavier than water and is thus concave upwards during deployment; the other two designs are buoyant and are concave downwards.

During the duration of the design effort, a number of alternate values of CWP buoyancy have been examined and are presented within this report. These values are listed at the end of Table 1.

cc: Jim Schaff James Schaff

Released 30 Aug 79

APPENDIX J

GMDI

COST ESTIMATES FOR OTEC 10/40
HULL/CWP TRANSITIONS

13 AUGUST 1979

PREPARED FOR TRW

GLOBAL MARINE DEVELOPMENT INC.
2302 Martin Street
Irvine, California 92715

MADE BY H S IM

CHECKED BY

DATE AUG-13 1979

GLOBAL MARINE DEVELOPMENT INC.

ESTIMATE SHEET

TITLE OTEC 10/40 POLYETHYLENE

W.O. No./A.F.E. No. 04087-051100

SHEETS ____ SHEET NO. 1

DESCRIPTION	QUAN.	UNITS		LABOR	MAT'L
		L	M	(M.H)	($)
(1) 2" PL. 13'-0" x 6'-0" @ 81.6 #/□' x6^{EA}	38.189$^{\#}$				—
" 7'-0" x 5'-0" @ 81.6 #/□' x2^{EA}	5.712				
" 3'-6" x 7'-0" @ 81.6 #/□' x1^{EA}	1.999				
" 6" x 8'-6" @ 81.6 #/□' x1^{EA}	347				
	x2 = 92 494$^{\#}$	150 H/T	40¢/lb	6937	36.998
(2) 4" PL. 13'-0" x 8'-0" @ 163.2 #/□' x1^{EA}	16.973$^{\#}$				
10'-0" x 6'-6" @ 163.2 #/□' x1^{EA}	10.608				
	x2 = 55.162$^{\#}$	100 H/T	40¢/lb	2758	22 065
(3) 48" I.D. (1" WALL THK) PIPE L = 6'-0"	3075$^{\#}$	40/T	40¢/lb	62	1230
(4) 12" DIA SOLID STEEL BARS 4^{EA} x 47'-0" @ 384.34 #/FT (ABOVE UNIVERSAL)	72.256$^{\#}$ 12x8=96	 @ 4^{EA}	50¢/lb	384	36.128
(5) 6½" DIA SOLID STEEL BARS 4^{EA} x 35'-4" @ 112.66 #/FT (BELOW UNIVERSAL)	15.921$^{\#}$		50¢/lb	384	7.961
(6) 6½" DIA SOLID STEEL BARS 4^{EA} x 15'-0" @ 112.66 #/FT (@ UNIVERSAL)	6.760$^{\#}$		50¢/lb	384	3.380
(7) FLANGE					
a) 2½" DIA BOLTS HEAVY HEX W/NUT LONG 12" C.T.C 8" 36 KSI	144^{EA}	2	10.00	288	1440
b) FB 2"x8", L = 3.14 x 30'-10" = 96.8' @ 54.4 #/' x 2^{EA} A-36	10.532$^{\#}$	120 H/T	40¢/lb	632	4.213
c) 1" PL. 8" x 10" @ 40.8 #/□' x 288^{EA} (288^{EA} @ 2 HRS) A-36	6534$^{\#}$		40¢/lb	576	2614

MADE BY H S IM

CHECKED BY

DATE AUG - 13 1979

GLOBAL MARINE DEVELOPMENT INC.

ESTIMATE SHEET

TITLE OTEC 10/40 POLYETHLENE

W.O. No./A.F.E. No. 04087-05110C

SHEETS ____ SHEET NO. 2

DESCRIPTION	QUAN.	UNITS		LABOR	MAT'L
		L	M	(M.H)	($)
d) FB 2" x 1", L = 3.14 x 30'-4" = 95.29' @ 6.8#/' x 2^{EA}	1295#	120H/T	40¢/lb	78	518
(8) STRAIGHT TRANSITION					
1" PL 30'-0" DIA, L = 40'-6" A-36	155.656#	100/T	40¢/lb	7783	62 262
(9) CONE TRANSITION					
1" W.T. TOP 30'-0" DIA, L = 36'-0" 1" WT. BOTTOM 42'-2" DIA (4139 FT^2)	168.382#	160/T	40¢/lb	13.470	67 353
(10) STIFFENING RINGS					
1" PL 18" x 113'-0" @ 40.8#/□' x 2^{EA}	13.831#		40¢/lb		5532
1" PL 34" x 103'-7½" @ 40.8#/□' x 4^{EA}	47.857#		40¢/lb		19.143
	61688#	75/T		2.313	24 675
(11) CABLE TERMINATION					
a) 1" PL 13'-9" x 36' @ 40.8#/□' x 6^{EA}	121.176#	100/T	40¢/lb	6059	48.470
b) DBL ∠8x4x1, L = 36'-6" @ 74.8#/' x 6^{EA}	16.381#	120/T	35¢/lb	983	5733
" " L = 13'-9" @ 74.8#/' x 6^{EA}	6.171	"	"	370	2.160
" " L = 36'-11" @ 74.8#/' x 6^{EA}	16.570	"	"	994	5800
SUPPORT RING (A-36)					
1" PL 10" x 126.64' @ 40.8#/□' x 1	4289#	120/T	40¢/lb	257	1716
1" PL 6" x 126.12' @ 40.8#/□' x 2	5146	120/T	"	309	2058
(12) GUIDE BRACKETS (A-36)					
1" PL 29" x 16" @ 40.8#/□' x 24^{EA}	3155#		40¢/lb		1262
" 8" x 48" @ 40.8#/□' x 36^{EA}	3936		"		1574
" 8" x 9" @ 40.8#/□' x 72^{EA}	1476		"		590
2" PL 36" x 36" @ 81.6#/□' x 12^{EA}	8812		"		3525
	17379#	150/T		1303	6.951

MADE BY H S IM

CHECKED BY

DATE AUG-14 1979

GLOBAL MARINE DEVELOPMENT INC.

ESTIMATE SHEET

W.O. No./A.F.E. No. 04087-051100

SHEETS ____ SHEET NO. 3

TITLE OTEC 10/40 POLYETHLENE

DESCRIPTION	QUAN.	UNITS		LABOR (M.H)	MAT'L ($)	
		L	M			
(13) SPHERE 38'-0" DIA MECH SEAL	120'	-	-	919	48 368	SEE OTHER SHEET
(14) STAINLESS STEEL BALL SEAL SURFACE 38'-0" DIA (1" ℞) 2786 FT² @ 41.34 #/□' x1	115173 #	200 H/T	1 60	11.517	172.760	
(15) STIFFNERS (61.2 #/FT)						
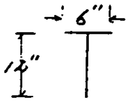 37'-0" DIA x 2 EA	14.220 #		40¢/lb		5.688	
25'-3" LONG x 36 EA	55.631		"		22.252	
38'-0" DIA. x 1 EA	7302		"		2.921	
	77153 #	100 H/T		3858	30.861	
(16) 2000 KIP SPHERICAL BEARING (24" I.D. x 48" O.D)	4 EA	80	50000	320	200.000	
(17) BEARING PIN FORGING MAT'L 4330 WITH INCONEL 625 CLADDING (25.000 LB) 25.000 LB x 2 EA @ 62¢/lb	2 EA	160	15.500	320	31.000	
(18) PAINT. PAINT.	2200 GALS	1.0/G	$15/GAL	2200	33.000	
BLAST	110.000 □	1.5 H/100	$12/100 □	1650	13200	
TOTAL.				67.107	884.431	

LABOR 67 107 M.H @ $25.00/HR =	$ 1.677.675
MATERIAL COST	884.431
15% HANDLING	132665
	$ 2.694.771

MADE BY H. S. IM

GLOBAL MARINE DEVELOPMENT INC.

W.O. No./A.F.E. No. 04087-05110C

CHECKED BY ____________

ESTIMATE SHEET

SHEETS ____ SHEET NO. 1

DATE AUG-15 1979

TITLE OTEC 10/40 ELASTOMER

DESCRIPTION	QUAN.	UNITS		LABOR	MAT'L
		L	M	(M.H)	($)
(1) 2" PL (SAME AS POLYETHYLENE)	92.494#	150 H/T	40¢/lb	6937	36.998
(2) 4" PL (" ")	55 162#	100 H/T	40¢/lb	2758	22.065
(3) 48" I.D. (1" WALL THK) PIPE L=6'-0"	3075#	40 H/T	40¢/lb	62	1.230
(4) 19" DIA SOLID STEEL BARS 4EA x 47'-0" @ 963.3#/'	181 100#		50¢/lb	1152	90.550
(5) 10" DIA SOLID STEEL BARS 4EA x 35'-4" @ 267#/'	37.732#		50¢/lb	384	18.866
(6) 10" DIA SOLID STEEL BARS 4EA x 15'-0" @ 267#/'	16.020#		50¢/lb	384	8010
(2) FLANGE					
a) 2½" DIA BOLTS HEAVY HEX W/ NUT CTC 9"	144 EA	2	10.00	288	1.440
b) FB 8"x2½" L=3.14x30-10"=96.8' @ 68#/' x1 EA	6583#	120 H/T	40¢/lb	395	2.633
c) 1" PL. 8"x12" @ 40.8#/□' x 144 EA	3936		40¢/lb	288	1.574
d) FB 1"x3". L=30-5"x3.14=95.52' @ 10.2#/' x1 EA	974#	120 H/T	40¢/lb	58	390
(8) TRANSITION PIPE 1" PL 30'-0" DIA. L=40'-6" A-36	155.656#	100/T	40¢/lb	7783	62.262
(9) STIFFENING RINGS	61686#	75/T	40¢/lb	2313	24.675

MADE BY H S IM

CHECKED BY

DATE AUG-15 1979

GLOBAL MARINE DEVELOPMENT INC.

ESTIMATE SHEET

TITLE OTEC 10/40 ELASTOMER

W.O. No./A.F.E. No. 04087-051100

SHEETS ____ SHEET NO. 2

DESCRIPTION	QUAN.	UNITS L	UNITS M	LABOR (M.H)	MAT'L ($)
(10) SPHERE 38'-0" DIA. MECH SEAL	120'	–	–	918	48 368
(11) STAINLESS STEEL BALL SEAL SURFACE 38'-0" DIA (1" PL) 2786 FT^2 @ 41.34 #/□' x 1	115.173 #	200 H/T	1^{60}	11.517	184.277
(12) STIFFNERS	77153 #	100/T	40¢/lb	3858	30.861
(13) 2000 KIP SPHERICAL BEARING (24" I.D x 48" O.D)	4 EA	80	50.000	320	200.000
(14) BEARING PIN FORGING MAT'L 4330 WITH INCONEL 625 CLADDING (25.000 LB) 25.000 LB x 2 EA @ 62¢/lb	2 EA	160	15.500	320	31.000
(15) PAINT — PAINT	1290 GALS			1290	19.350
BLAST	86.000 □'			1290	10.320
TOTAL				42315	794.869

LABOR 42,315 M.H @ $25^{00}/HR = $ 1.057.875

MATERIAL 794.869

15% HANDLING 119.230

$ 1.971.974

MADE BY H S IM
CHECKED BY
DATE AUG-14 1979

GLOBAL MARINE DEVELOPMENT INC.

ESTIMATE SHEET

W.O. No./A.F.E. No. 04087-05110
SHEETS ____ SHEET NO. 1

TITLE OTEC 10/40 FRP

DESCRIPTION	QUAN.	UNITS		LABOR	MAT'L
		L	M	(MH)	($)
(1) 2" ⅊ (SAME AS POLYETHYLENE)	92.494#	150 H/T	40¢/lb	6937	36.998
(2) 4" ⅊ (" ")	55162#	100 H/T	40¢/lb	2758	22.065
(3) 48" I.D (1" WALL THK) PIPE L = 6'-0"	3075#	40 H/T	40¢/lb	62	1.230
(4) 15" DIA SOLID STEEL BARS 4^{EA} x 47'-0" @ 600.4 #/'	112875#		50¢/lb	768	56.438
(5) 8" DIA SOLID STEEL BARS 4^{EA} x 35'-4" @ 170.9 #/FT	24.152#		50¢/lb	384	12.076
(6) 8" DIA SOLID STEEL BARS 4^{EA} x 15'-0" @ 170.9 #/FT	10.254#		50¢/lb	384	5127
(7) FLANGE					
a) 2½" DIA BOLTS HEAVY HEX w/NUT C.T.C. 9"	144^{EA}	2	10^{00}	288	1440
b) FB 3¼" x 8" L = 3.14 x 30'-10" = 96.8' @ 88.4 #/' x 1^{EA}	8.557#	120 H/T	40¢/lb	513	3423
c) 1" ⅊ 8" x 13" @ 40.8 #/□' x 144^{EA}	3.936#		40¢/lb	288	1574
d) FB 1½" x 3" L = 3.14 x 30'-5" = 95.52 @ 15.3 #/' x 1^{EA}	1461#	120 H/T	40¢/lb	88	584
(8) TRANSITION PIPE 1" ⅊ 30'-0" DIA. L = 40'-6" A-36	155.656#	100/T	40¢/lb	7.783	62.262
(9) STIFFENING RINGS					
1" ⅊ 18" x 113'-0" @ 40.8 #/□' x 2^{EA}	13.831#				
1" ⅊ 34" x 103'-7½" @ 40.8 #/□' x 4^{EA}	47857				
	61688	75/T	40¢/lb	2313	24675

MADE BY H. S. IM

CHECKED BY

DATE AUG-14 1979

GLOBAL MARINE DEVELOPMENT INC.

ESTIMATE SHEET

TITLE OTEC 10/40. FRP

W.O. No./A.F.E. No. 04087-051100

SHEETS ____ SHEET NO. 2

DESCRIPTION	QUAN.	UNITS		LABOR	MAT'L	
		L	M	(M.H)	($)	
(10) SPHERE 38'-0" DIA MECH SEAL	120'	-	-	918	48.368	SEE OTHER SHEET
(11) STAINLESS STEEL BALL SEAL SURFACE 38'-0" DIA (1" PL) 2786 FT² @ 41.34 #/□ x1	115173 #	200 H/T	1^{60}	11517	184.277	
(12) STIFFNERS	77153 #	100/T	40¢/lb	3858	30.861	
(13) 2000 KIP SPHERICAL BEARING (24" I.D. x 48" O.D)	4 EA	80	50.000	320	200.000	
(14) BEARING PIN FORGING MAT'L 4330 WITH INCONEL 625 CLADDING (25.000 LB) 25.000 LB x 2 EA @ 62¢/lb	2 EA	160	15.500	320	31.000	
(15) PAINT — PAINT	1137 GALS			1137	17.055	
BLAST	76.000 □			1140	9120	
TOTAL				41.776	748.573	

LABOR 41.776 M.H @ $ 25^{00}/HR = $ 1.044.400

MATERIAL = 748.573

15% HANDLING = 112.286

$ 1.905.259

MADE BY H. S IM

CHECKED BY

DATE AUG-13 1979

GLOBAL MARINE DEVELOPMENT INC.

ESTIMATE SHEET

TITLE OTEC 10-40 CWP SPHERICAL SEAL

W.O. No./A.F.E. No. 09087-05110C

SHEETS ____ SHEET NO. 1

DESCRIPTION	QUAN.	UNITS		LABOR	MAT'L	
		L	M	(M.H)	($)	
(1) 24" x 24" x 2" TEFLON SHOES (25% GLASS FILLED) 864 IN^3 @ $.60/$IN^3$ = $518.4/EA	80^{EA}		$ 518^{40}/EA	128	41472 –	
(2) TYPE 1. SHOE SUPPORT FINGERS 1/8" PL STAINLESS STEEL 384 IN^2/EA @ 0.0359 #/IN^2 = 13.79# 13.79^{lbs} @ 40^{EA} = 551.6#	552^{lbs}		1^{60}	80	383	
(3) TYPE 2. SHOE SUPPORT FINGERS 1/8" PL STAINLESS STEEL	552^{lbs}		1^{60}	80	883	
(4) SEAL BOOT 60 DURO 1" THICK NEOPRENE 4'x121' = 54 S.Y.	$54^{S.Y.}$		15^{00}	54	810	R.O.M
(5) SHOE / BOOT BACK UP PLATE 1/8" PL STAINLESS STEEL 6" x 31" = 186 IN^2 186 IN^2 @ 0.0359#/IN^2 = 6.67# 6.67^{lbs} @ 80^{EA} = 533.6^{lbs}	534^{lbs}		1^{60}	160	854	
(6) BOLT 3/4"-10. L = 3 1/2" S.S	160^{EA}		2^{57}/EA	80	411	
BOLT 3/4"-10 L = 2" S.S	160^{EA}		1^{87}/EA	80	299	
LOCKWASHER 3/4" S S	320^{EA}		21¢/EA	–	67	
FLATWASHER 3/4" S.S	320^{EA}		48¢/EA	–	154	
HEX NUT 3/4"-10 S.S	320^{EA}		1^{21}/EA	–	387	
BOLT 1"-8 L = 3" S S	80^{EA}		2^{50}/EA	40	200	
BOLT 3/4"-10 L = 2 1/4" S.S	80^{EA}		1^{87}/EA	40	150	

MADE BY H. S. Im

CHECKED BY

DATE AUG - 3 1979

GLOBAL MARINE DEVELOPMENT INC.

ESTIMATE SHEET

TITLE OTEC 10-40 CWP SPHERICAL SEAL

W.O. No./A.F.E. No. 04087-051100

SHEETS ____ SHEET NO. 2

DESCRIPTION	QUAN.	UNITS		LABOR	MAT'L	
		L	M	(M.H)	($)	
HEX NUT 1"-8 S S	80 EA		2 72/EA	-	218	
HEX NUT 3/4"-10 S.S	80 EA		1 21/EA	-	97	
LOCKWASHER 1" S S	80 EA		61¢/EA	-	49	
LOCKWASHER 3/4" S.S	80 EA		21¢/EA	-	17	
JAM NUT 3/4" -10 S.S	160 EA		1 21/EA	-	194	
(7) ∠ 6"x6"x 1/2". L = 120.89' @ 19.6#/'	2370 #	120/T	40¢/lb	142	948	
PL 1/4" 5 1/2" x 122.46' @ 10.2#/□'	573 #	120/T	40¢/lb	34	275	+20%
SUBTOTAL				918	48,368	

APPENDIX K

GMDI

OTEC 10/40 CWP AT-SEA DEPLOYMENT SCENARIO AND COST ESTIMATES DETAILS

11 SEPTEMBER 1979

PREPARED FOR TRW

GLOBAL MARINE DEVELOPMENT INC.
2302 Martin Street
Irvine, California 92715

OTEC 10/40 CWP AT-SEA DEPLOYMENT

SCENARIO AND COST ESTIMATES DETAILS

INDEX

2.4 FRP CWP INSTALLATION AND AT-SEA DEPLOYMENT PROCEDURE - PUERTO RICO

9-12-79

P1 of 4

ITEM	1	2	3	4	5	6 RECURRING COSTS	7	8	9 NON RECURRING COSTS	10	11 TOTAL COSTS	12
MOBILIZATION			49 DAYS: EQUIPMENT LEASE: 15 DAYS									
MATERIAL												
STABILIZING TANK					TRW							
CEMENT (HALLIBURTON)	MATERIAL & PUMPING				480,000						480000	
HARNESS									148000		148000	
CABLE									53300		53300	
CEMENT HOSES									32,000		32000	
MODIFY BARGE					131,000						131,000	
WINCH					2,500				947,000		949500	
"A" FRAME					10,000				57,000		67000	
LEASE:												
(1) WORK BARGE 100' x 400'	@	2500/DAY										
(1) WORK BARGE 76' x 250'		1500/DAY										
(1) WORK BOAT x 194'		5000/DAY										
(1) TUG 2000 HP		2800/DAY										
(2) PICKET BOATS	EACH @	1000/DAY										
		=	13800/DAY x 15 DAYS =		207,000						207000	
FUEL:												
(1) WORK BARGE 100' x 400'		2000/DAY	-0- FUEL									
(1) WORK BOAT		2500/DAY	½ FUEL									
(1) TUG 2000 HP		1400/DAY	½ FUEL									
(2) PICKET BOATS	EACH @	500/DAY	-0- FUEL									
		=	1950/DAY x 15 DAYS =		29250						29250	
LABOR: SUPPORT	6 MEN 15 DAYS	12 HRS/DAY =	1080 HRS @	82^{00}/HR	88,560						88560	
TOTAL MOBILIZATION:						1948310			1,237,300		2,185,610	

2.4 FRP CWP INSTALLATION AND AT-SEA DEPLOYMENT PROCEDURE - PUERTO RICO

9-12-79

				Recurring Costs	Non-Recurring Costs	Total Costs
TRANSIT TO SHORE SITE:	1700 MILES	19 DAYS				
LEASE: DAY RATES						
		13800/DAY x 19 DAYS =	262200			
FUEL:		3900/DAY X 19 DAYS =	74100			
LABOR:						
6 MEN 1 DAY 8 HRS		48 HRS @ 43^{00}/HR =	2064			
TRANSPORTATION:	6 MEN RD TRIP	@ 500^{00} =	3000			
SUBSISTENCE:	6 MEN 1 DAY	@ 100^{00}/DAY =	600			
TOTALS TRANSIT TO SHORE SITE:				341964	-0-	341964
PRE-DEPLOYMENT AT SHORE SITE:		10 DAYS				
MATERIAL:						
END COVER & SCREEN COVER			5600			
LEASE						
VESSELS		13800/DAY x 10 DAYS =	138000			
FUEL	HALF FUEL	1950/DAY x 10 DAYS	19500			
SUBSISTENCE:	6 MEN 10 DAYS	@ 100^{00}/DAY =	6000			
LABOR						
INSTALL HARNESS & COVERS	12.5 MEN 10 DAYS 12 HR	1500 HRS @ 82^{00}/HR:	123000			
SUPPORT LABOR	6 MEN 10 DAYS	12 HRS/DAY: 720 HRS @ 82^{00}/	59040			
TOTALS: PRE-DEPLOYMENT AT SHORE SITE:				351140	-0-	351140

49129 - Buff
89129 - Green
42129 - White

2.4 FRP CWP INSTALLATION AND AT-SEA DEPLOYMENT PROCEDURE – PUERTO RICO

9-12-79

P3 OF 4

ITEM	1	2	3	4	5	RECURRING COSTS	NON RECURRING COSTS	TOTAL COSTS
TOW TO OTEC PLATFORM SITE:		10 MILES	0.5 DAY					
LEASE								
VESSELS			13800/DAY × ½ DAY =		6900 –			
FUEL			4900/DAY × ½ DAY =		2450 –			
LABOR	6 MEN ½ DAY	12 HRS =	36 HRS @	82/HR	2952			
SUBSISTENCE	6 MEN ½ DAY		@	50/DAY	150 –			
TOTAL: TOW TO OTEC PLATFORM SITE:						12,452	– 0 –	12,452 –
DEPLOYMENT AT SITE:			18 DAYS					
SUBCONTRACT:								
DETONATE LOWERING LINE DISCONNECT CHARGE } DETONATE CEMENT HOSE DISCONNECT CHARGE }			2 @	3500 =	7000 –			
DIVERS					500,969			
LEASE								
VESSELS			13800/DAY × 18 DAYS =		248400			
FUEL			6900/DAY × 18 DAYS =		124200			
SUBSISTENCE: 10 men 3 days + 6 men 18 days = 138 man days			@	50/DAY	6900			
LABOR								
REMOVE HARNESS & COVERS	10 MEN 3 DAYS 12 HRS =		350 HR @	82/HR	28700			
SUPPORT	6 MEN 18 DAYS	12 HRS/DAY =	1296 HRS @	82/HR	106,272			
TOTALS: DEPLOYMENT AT SITE:						1,022,441	– 0 –	1,022,441

2.4 FRP CWP INSTALLATION AND AT-SEA DEPLOYMENT PROCEDURE - PUERTO RICO

9-12-79

pg 4 of 4

ITEM	1	2	3	4	5	RECURRING COSTS	NON-RECURRING COSTS	TOTAL COSTS
RETURN TRANSIT TO SHORE SITE:		10 MILES	1.5 DAYS					
LEASE								
VESSELS			13800$/DAY	x 1.5 DAYS =	20700			
FUEL			3900/DAY	x 1.5 DAYS =	5850			
LABOR								
SUBSISTENCE	6 MEN 1.5 DAYS			@ 50$/DAY =	450			
SUPPORT	6 MEN 1.5 DAYS	12 HRS	108 HRS @	82$/HR	8856			
TOTAL: RETURN TRANSIT TO SHORE SITE						35856	-0-	35856
TRANSIT SHORE SITE TO NEW ORLEANS:		1700 MILES	19 DAYS					
LEASE: VESSELS			13800/DAY	x 19 DAYS =	262200			
FUEL			3900/DAY	x 19 DAYS =	74100			
LABOR								
SUPPORT	6 MEN 1 DAY	8 HRS/DAY	48 HRS @	43^{00}/HR	2064			
SUBSISTENCE	6 MEN 1 DAY			@ 100$/DAY =	600			
TOTALS: TRANSIT SHORE SITE TO NEW ORLEANS:						338,964	-0-	338,964
DEMOBILIZATION:			14 DAYS					
LEASE: VESSELS			13800/DAY x	14 DAYS =	193200			
FUEL	HALF FUEL		1950/DAY x	14 DAYS =	27300			
LABOR: SUPPORT	6 MEN 14 DAY	12 HRS	1008 HRS @	82$/HR	82656			
TOTALS: DEMOBILIZATION						303,156	-0-	303,156
GRAND TOTALS: ALL ITEMS:						3,354,283	1,237,300	4,591,583

OTEC 10/40

FIBERGLASS REINFORCED PLASTIC CWP 30' DIA.

VESSELS AND EQUIPMENT REQUIRED

1 - WORK BARGE 100' x 400'
1 - WORK BARGE 76' x 250'
1 - TOWING SUPPLY VESSEL 194' x 40'
1 - TOWING TUG 2000 H.P.
2 - PICKET BOATS 25' x 10'

1 - WINCH
1 - "A" FRAME

MODIFY BARGE WITH FOUNDATIONS TO ACCEPT WINCH AND "A" FRAME

1 LOT HALLIBURTON CEMENTING EQUIPMENT INCLUDING PUMPS AND BINS
1 LOT HYDRAULIC HOSES
1 - TOWING HARNESS
1 - PIPE END CAP
1 - WRAP-AROUND SCREEN COVER
1 - LOWERING CABLE

4912½ Buff
8912½ Green
4212½ White

3.4 POLYETHYLENE INSTALLATION PLAN

9-12-79

P1 OF 3

ITEM	1	2	3	4	5	6 RECURRING COSTS	7	8	9 NON-RECURRING COSTS	10	11 TOTAL COSTS	12
MOBILIZATION		49 DAYS - EQUIPMENT LEASE : 15 DAYS										
MATERIAL												
STABILIZING TANK					TRW							
CEMENT (HALLIBURTON)					537,000							
HARNESS									148,000			
CABLES (LOWERING)									106,600			
CEMENT HOSES									82,000			
MODIFY BARGE					261,000							
WINCHES - BUY & INSTALL (& REMOVE)					5000				1,894,000			
"A" FRAMES	FAB- INSTALL (& REMOVE)				20,000				114,000			
LEASE :												
(1) WORK BARGE 100' x 40'		2500/DAY										
(1) WORK BARGE 76' x 250'		1500/DAY										
(1) WORK BOAT x 194'		5000/DAY										
(1) TUG 2,000 HP		2800/DAY										
(2) PICKET BOATS	EACH @	1000/DAY										
		=	13,800/DAY x 15 DAYS =		207,000							
FUEL:												
(1) WORK BARGE 100' x 40'		2000/DAY	¼ FUEL									
(1) WORK BOAT x 194'		2500/DAY	½ FUEL									
(1) TUG 2,000 HP		1400/DAY	½ FUEL									
(2) PICKET BOATS	EACH @	500/DAY	¼ FUEL									
		=	1950/DAY x 15 DAYS =		29,250							
LABOR:												
SUPPORT	6 MEN/15 DAYS 12 HRS/DAY =		1080 HRS @	82^{04}/HR =	88,560							
TOTAL MOBILIZATION:						1,147,810			2,294,600		3,442,410	

49125 Buff
89125 Green
42125 White

3.4 POLYETHYLENE INSTALLATION PLAN 9-12-79 P2 OF 3

ITEM	1	2	3	4	5	RECURRING COSTS	7	8	NON-RECURRING COSTS	10	TOTAL COSTS	12
TRANSIT TO SHORE SITE:		1700 MILES	19 DAYS									
LEASE			13800/DAY	x 19 DAYS =	262200							
FUEL			3900/DAY	x 19 DAYS =	74100							
LABOR - SUPPORT	6 MEN 1 DAY	8 HRS =	48 HRS	@ 43^{00}/HR	2064							
TRANSPORTATION	6 MEN	RD TRIP		@ 500	3000							
SUBSISTENCE	6 MEN	1 DAY		@ 100	600							
TOTAL TRANSIT TO SHORE SITE:						341,964			-0-		341964	
PRE-DEPLOYMENT AT SHORE SITE:			10 DAYS									
MATERIAL:												
END COVER & SCREEN COVER					5600							
LEASE			13800/DAY	x 10 DAYS =	138000							
FUEL			1950/DAY	x 10 DAYS =	19500							
LABOR												
INSTALL HARNESS & COVERS			1500 HRS	@ 82^{00}/HR	123000							
SUBSISTENCE	6 MEN 10 DAYS			@ 100/DAY	6000							
SUPPORT	6 MEN 10 DAYS	12 HRS/DAY	720 HRS	@ 82^{00}/HR	59040							
TOTAL: PRE-DEPLOYMENT:						345,540			-0-		345540	
TOW TO OTEC PLATFORM SITE:		10 MILES	0.5 DAY									
LEASE			13800/DAY	x ½ DAY =	6900							
FUEL			4900/DAY	x ½ DAY =	2450							
LABOR - SUPPORT	6 MEN ½ DAY	12 HRS =	36 HRS	@ 82^{00}/HR	2952							
SUBSISTENCE	6 MEN ½ DAY			@ 50^{00}/DAY	150							
TOTAL: TOW						12,452			-0-		12,452	

49125 - Buff
89125 - Green
47125 - White

3.4 POLYETHYLENE INSTALLATION PLAN 9-12-79 P3 OF 3

ITEM	1	2	3	4	5	6 RECURRING COSTS	7	8	NON-RECURRING COSTS	10	11 TOTAL COSTS	12
DEPLOYMENT AT SITE:			21 DAYS									
SUBCONTRACT:												
DIVERS - INSTALL BOLTS IN PIPE FLANGES					1,255,676							
DETONATE LOWERING LINE & CEMENT HOSE												
DISCONNECT CHARGES			2 @	3500	7000							
LEASE:			13,800/DAY	x 21 DAYS =	289,800							
FUEL			6900/DAY	x 21 DAY	144,900							
LABOR												
REMOVE HARNESS & COVERS			350 HRS @	82.00/HR	28700							
SUPPORT.	6 MEN	21 DAYS 12 HRS =	1512 HRS @	82.00/HR	123984							
SUBSISTENCE	6 MEN	21 DAYS + 10 MEN 3 DAYS	156 MD @	50.00/DAY	7800							
TOTAL DEPLOYMENT						1,857,860			-0-		1,857,860	
RETURN TRANSIT TO SHORE SITE		10 MILES	1.5 DAYS									
LEASE			13800/DAY	x 1½ DAYS =	20700							
FUEL			3900/DAY	x 1½ DAYS =	5850							
LABOR - SUPPORT	6 MEN 1½ DAY 12 HRS	=	108 HRS @	82.00/HR =	8856							
SUBSISTENCE	6 MEN 1½ DAY		@	50.00/MAN	450							
TOTAL						35856			-0-		35,856	
TRANSIT SHORE SITE TO NEW ORLEANS:		1700 MILES	19 DAYS									
LEASE			13800/DAY x	19 DAY =	262200							
FUEL			3900/DAY x	19 DAY	174100							
LABOR - SUPPORT	6 MEN 1 DAY 8 HRS	=	48 HRS @	43.00/HR	2064							
SUBSISTENCE	6 MEN 1 DAY		@	100	600							
TOTAL						338964			-0-		338964	
DEMOBILIZATION			14 DAYS									
LEASE			13800/DAY x	14 DAYS =	193,200							
FUEL			1950/DAY x	14 DAYS =	27,300							
LABOR	6 MEN 14 DAY 12 HRS	=	1008 HRS @	82.00/HR =	82656							
TOTAL						303156			-0-		303156	
GRAND TOTALS						4383602			2294600		6678202	

OTEC 10/40

POLYETHYLENE (MULTIPLE) CWP (7 PIPES CLUSTERED: EACH 12' DIA

VESSELS AND EQUIPMENT REQUIRED

1 - WORK BARGE 100' x 400'
1 - WORK BARGE 76' x 250'
1 - TOWING SUPPLY VESSEL 194' x 40'
1 - TOWING TUG 2000 HP
2 - PICKET BOATS 25' x 10'

2 - WINCHES
2 - "A" - FRAMES

MODIFY BARGE WITH FOUNDATIONS TO ACCEPT
(2) WINCHES AND (2) "A" FRAMES

1 LOT HALLIBURTON CEMENTING EQUIPMENT
INCLUDING PUMPS AND BINS
1 LOT HYDRAULIC HOSES
1 - TOWING HARNESS
1 - PIPE END CAP
1 - WRAP-AROUND SCREEN COVER
2 - LOWERING CABLES

49125 - Buff
89125 - Green
42125 - White

4.4 DEPLOYMENT OF ELASTOMER CWP - PUERTO RICO 9-11-79

p1 of 4

EVENT	1	2	3	4	5	6 RECURRING COSTS	7	8	9 NON RECURRING COSTS	10	11 TOTAL COSTS	12
MOBILIZATION	49 DAYS: EQUIPMENT	LEASE		15 DAYS								
MATERIAL												
SLIP JACKS (4)	INSTALLATION	4 @	165000		660000		@	1,700,000	6,800,000			
SPREADER RING (1)									200000			
STIFF LEG CRANE	INSTALLATION				220000				1,900,000			
EPOXY MIXING EQUIPMENT									20000			
HYDRAULIC JACKS	INSTALLATION				10000				200000			
LEASE												
(1) BARGE 100' x 400'	@	2500^{00}/DAY										
(1) TUG 2000 HP	@	2800^{00}/DAY										
		=	5300/DAY	x 15 DAYS =	79500							
FUEL: (1) TUG 2000HP	@	HALF FUEL	700/DAY	x 15 DAYS =	10500							
LABOR: SUPPORT	3 MEN 7 DAYS 8 HRS/DAY =		168 MH	@ 43^{00}/HR =	7224							
DIVERS EQUIPMENT			7 DAYS	@ 1000/DAY	7000							
TOTAL MOBILIZATION:						994224	✓		9,120,000		10,114224	
TRANSIT TO SHORE SITE:	1700 MILES	19 DAYS										
LEASE: VESSELS			5300/DAY	x 19 DAYS =	100700							
FUEL:			1400/DAY	x 19 DAYS =	26600							
LABOR: SUPPORT	6 MEN 2 DAYS 8 HRS/DAY =		96 MH	@ 43^{00}/HR =	4128							
DIVERS	4 MEN 2 DAYS	@	122^{00}/DAY	=	3876							
TRANSPORTATION	20 MEN	@	500^{00}/RD TRIP	=	10000							
SUBSISTENCE	20 MEN 2 DAYS	@	100^{00}/DAY		4000							
DIVERS EQUIPMENT			19 DAYS @	1000^{00}/DAY	19000							
TOTAL: TRANSIT:						167,804	✓		-0-		167,804	
PRE-DEPLOYMENT AT SHORE SITE		3 DAYS	DIVERS EQUIP'T SUBSISTENCE		3000 1800							
LEASE: VESSELS			5300/DAY	x 3 DAYS	15900							
FUEL	@ HALF FUEL		700/DAY	x 3 DAYS	2100							
LABOR	6 MEN 3 DAYS 12 HRS/DAY =		216 MH @	82^{00}/MH	17712							
TOTAL PRE-DEPLOYMENT:						40512	✓		-0-		40,512	

4.4 DEPLOYMENT OF ELASTOMER CWP - PUERTO RICO 9-11-79 p2 of 4

EVENT	1	2	3	4	5	RECURRING COSTS	7	8	NON-RECURRING COSTS	10	TOTAL COSTS	12
LOAD FIRST LOAD OF PIPE SECTIONS			7 DAYS	DIVERS EQUIP SUBSISTENCE	7000 4200							
LEASE			5300/DAY ×	7 DAYS	37100							
FUEL	@ HALF FUEL		700/DAY ×	7 DAY	4900							
LABOR - SUPPORT	6 MEN 7 DAYS	12 HRS/DAY =	504 MH	@ 82/HR	41,328							
TOTAL FIRST LOAD						94528	✓		-0-		94528	
TOW 1ST LOAD TO OTEC SITE		10 MILES	0.5 DAY	DIVERS EQUIP/MAT. SUBSISTENCE (2D)	500 500							
LEASE			5300/DAY ×	½ DAY =	2650							
FUEL			1400/DAY ×	½ DAY =	1700							
LABOR - SUPPORT	6 MEN ½ DAY	12 HRS/DAY =	36 MH	@ 82/HR	2952							
TOTAL: 1ST TOW						7302	✓		-0-		7302	
OFF LOAD PIPE TO PLATFORM			5 DAYS (SIMO)									
LEASE			5300/DAY ×	5 DAYS =	26500							
FUEL		½ FUEL	700/DAY ×	5 DAYS =	3500							
LABOR - SUPPORT	6 MEN 5 DAYS	12 HRS/DAY	360 MH	@ 82	29520							
TOTAL OFF LOAD						59520	✓		-0-		59520	
RETURN TRANSIT TO SHORE SITE		16 MILES	0.5 DAY (SIMO)									
LEASE			5300/DAY ×	½ DAY =	2650							
FUEL			1400/DAY ×	½ DAY =	1700							
LABOR - SUPPORT	6 MEN ½ DAY	12 HRS/DAY =	36 MH	82	2952							
TOTAL: RETURN TRANSIT						6302	✓		-0-		6302	
LOAD SECOND LOAD OF PIPE SECTIONS			7 DAYS (SIMO)									
LEASE			5300/DAY ×	7 DAYS =	37100							
FUEL		½ FUEL	700/DAY ×	7 DAYS =	4900							
LABOR - SUPPORT	6 MEN 7 DAYS	12 HRS/DAY =	504 MH	@ 82/HR	41328							
TOTAL: SECOND LOAD						83328	✓		-0-		83328	

4.4 DEPLOYMENT OF ELASTOMER CWP – PUERTO RICO 9-11-79 p3 OF 4

EVENT	1	2	3	4	5	6 RECURRING COSTS	7	8	9 NON RECURRING COSTS	10	11 TOTAL COSTS	12
TOW SECOND LOAD TO OTEC SITE		10 MILES	0.5 DAY	(SIMO)								
LEASE			5300/DAY	x ½ DAY =	2650							
FUEL			1400/DAY	x ½ DAY =	700							
LABOR - SUPPORT	6 MEN ½ DAY / 12 HRS/DAY		36 MH	@ 82^{00}/HR	2952							
TOTAL: SECOND TOW						6302 ✓			-0-		6302 -	
OFFLOAD PIPE TO PLATFORM			(5 DAYS)	(SIMO)								
LEASE			5300/DAY	x 5 DAYS =	26500							
FUEL		½ FUEL	700/DAY	x 5 DAYS =	3500							
LABOR - SUPPORT	6 MEN 5 DAYS	12 HRS/DAY =	360 MH	@ 82^{00}/HR =	29520							
TOTAL: OFFLOAD						59520 ✓			-0-		59520 -	
STANDBY TIME	67.5 DAYS – 18 DAYS =		49.5 DAYS									
DEPLOY PIPE			DIVERS EQUIPT 67.5 DAYS SUBSISTENCE 20×67.5 =		67500 67500							
LEASE			5300/DAY	x 49.5 DAYS =	262350							
FUEL		¼ FUEL	350/DAY	x 49.5 DAYS =	17325							
LABOR - SUPPORT	6 MEN 49.5 DAYS	12 HRS/DAY =	3564 MH	@ 82^{00}/HR	292248							
DIVERS	14 MEN 9 DAYS			@ 422^{00}/DAY =	53172							
DIVERS MATERIAL	5 DAYS			@ 400^{00}/DAY =	2000							
TOTAL DEPLOY PIPE & STANDBY TIME						762095 ✓			-0-		762095	
				DIVERS EQUIPT	1500							
RETURN TRANSIT TO SHORE SITE		10 MILES	1.5 DAYS	SUBSISTENCE 20	1500							
LEASE			5300/DAY	x 1.5 DAYS =	7950							
FUEL			1400/DAY	x 1.5 DAYS =	2100							
LABOR - SUPPORT	6 MEN 1.5 DAYS	12 HRS/DAY =	108 MH	@ 82^{00}/HR	8856							
TOTAL: RETURN TRANSIT						21906 ✓			-0-		21906	

43125 - Buff
89125 - Green
42125 - White

4.4 DEPLOYMENT OF ELASTOMER CWP - PUERTO RICO 9-11-79 p 4 of 4

EVENT	1	2	3	4	5	6 RECURRING COSTS	7	8	9 NON RECURRING COSTS	10	11 TOTAL COSTS	12
TRANSIT: SHORE SITE TO NEW ORLEANS:			1700 MILES	19 DAYS	DIVERS SUBS / EQUIPT STAND (20)	15000 4000						
LEASE: VESSELS			5300/DAY × 19 DAYS =		106700							
FUEL			1400/DAY × 19 DAYS =		26600							
LABOR - SUPPORT	6 MEN 2 DAYS 8 HRS/DAY		96 MH @	43^00/HR	4128							
DIVERS	4 MEN 2 DAYS		@	422^00/DAY	11,816							
TOTAL: TRANSIT						166,204	✓		-0-		166,204	
		DIVERS EQUIPT 3 DAYS			3000							
DEMOBILIZATION		DIVERS 3 DAYS 10 MEN		14 DAYS	12660							
LEASE: VESSELS			5300/DAY × 14 DAYS =		74200							
FUEL		@ HALF FUEL	700/DAY × 14 DAYS =		9800							
LABOR - SUPPORT	3 MEN 7 DAYS 8 HRS/DAY		168 MH @	43^00/HR	7224							
TOTAL: DEMOBILIZATION						106,884	✓		-0-		106,884	
GRAND TOTALS						2,576431			9,120000		11,696431	

OTEC 10/40

ELASTOMER CWP 30' DIA.

VESSELS AND EQUIPMENT REQUIRED

1 - WORK BARGE 100' x 400'
1 - TOWING TUG 2000 HP

4 - SLIP JACKS 1,500,000 LB. CAPACITY EACH (INCL. RING)
1 - STIFF LEG CRANE
1 - HYDRAULIC JACK SYSTEM (UPPER & LOWER)
1 - SPREADER RING (PICK UP HARNESS)
1 - LOT EPOXY MIXING EQUIPMENT

THE SLIP JACKS, STIFF LEG CRANE, HYDRAULIC JACK SYSTEM WILL REQUIRE FOUNDATIONS. THESE ITEMS ARE TO BE INSTALLED ABOARD THE BARGE PLATFORM AT THE SHIPYARD.

MADE BY DGS.
CHECKED BY " " " "
DATE 9-12-79

GLOBAL MARINE DEVELOPMENT INC.

ESTIMATE SHEET

TITLE DIVER SERVICE & DIVER EQUIPMENT COST

W.O. No./A.F.E. No. 4087
SHEETS ____ SHEET NO. ____

DESCRIPTION	QUAN.	UNITS L	UNITS M	LABOR	MAT'L	
① POLYETHYLENE PIPE						
EQUIPMENT LEASE	83.3 DAYS				554,830	
DIVER & DIVER CREW SUPPORT LABOR	1420.3 MANDAYS				602,031	
SUBSISTENCE	446 MANDAYS		100^{00}/DAY		44,600	
	774.3 MANDAYS		50^{00}/DAY		38,715	
AIR FARE - ROUND TRIP	31 MEN		500^{00}/TRIP		15,500	
TOTAL						$1,255,676
② FRP PIPE						
EQUIPMENT LEASE	75 DAYS				213,600	
DIVER & DIVER CREW SUPPORT LABOR	472 MAN DAYS				245,069	
SUBSISTENCE	216 DAYS	@	100^{00}/DAY		21,600	
	254 DAYS	@	50^{00}/DAY		12,700	
AIR FARE - ROUND TRIP	16 MEN	@	500^{00}/TRIP		8,000	
TOTAL						500,969
③ ELASTOMER PIPE						
INCLUDED IN DEPLOYMENT ESTIMATE.						

9-12-79

REVISED DIVERS COSTS

	DAYS		PERSONNEL		MAN DAYS		LABOR COST		EQUIPT COST		TOTAL COST	
	P	FRP	P	FRP	P	FRP	P	FRP	P	FRP	P	FRP
DEPLOY FROM BEACH	10	10	31	14	310	140	130,820	59,080	71000	30,000	201,820	89080
TRANSIT TO SHORE	1.5	1.5	31	14	46.5	21	19,623	8,862	10,650	4,500	30,273	13,362
TOTALS	83.3	75										
INCREASE					+217	+98	+91,574	+41,356	+49,700	+21,000	141,274	+62,356
REV TOTAL					1420.3	1570	602,031	245,069	554,830	213,600	1156,461	458,669

SUBSISTENCE

	SEA		LAND	
	P	FRP	P	FRP
DEPLOY FROM BEACH			310	140
TRANSIT TO SHORE	46.5	21		
INCREASE	+31	+14	+186	+84
REV TOTAL	774.3	254	446	216
	✓	✓	✓	✓

9-10-79

OTEC 10/40

POLYETHYLENE PIPE

DIVERS : TAYLOR DIVING JOE ZENO (504) 394-6000

ASSIST IN DEPLOYMENT AT BEACH
    INSTALL COVERS & SCREEN COVER
ASSIST IN LOWERING OF PIPE
    REMOVE COVERS & SCREEN COVER
ASSIST IN IN-HAUL PROCEDURE
    OBSERVE & DIRECT – USE TV CAMERAS
INSTALL BOLTS IN MATING FLANGES
RELEASE IN-HAUL CABLES
ASSIST RAISING CEMENT HOSE INTO BARGE

ITEM	DAYS		PERSONNEL		MAN DAYS		LABOR COST		EQUIPT COST		TOTAL DIVING COST	
	POLY	FRP	POLY	FRP	POLY	FRP	POLY	FRP	POLY	FRP	POLY	FR
MOBILIZE	7	7	20	10	140	70	59080	29,540	49,700	21,000	108780	50540
FLY TIME	2	2	27	12	54	24	22788	10,128	–	–	22788	10
TRANSIT	19	19	4	2	76	38	32,072	16,036	134,900	57,000	166,972	73
+6 — DEPLOY FROM BEACH	4	4	31	14	~~124~~	~~56~~	~~52,328~~	~~23,632~~	~~28,400~~	~~12,000~~	~~80,728~~	~~35632~~
TOW	0.5	0.5	31	14	15.5	7	6,541	2954	3550	1,500	10091	4
PREPARE & LOWER CWP	5.8	5.3	31	14	179.8	74.2	75,876	31,312	41,180	15,900	117,056	47,212
KEEL HAUL	4.5	2.5	31	14	139.5	35	58,869	14,770	31,950	7,500	90819	22
* INSTALL BOLTS **	7.0	5.2	31	4	217	20.8	91,574	11,087	49,700	5200	141,274	16,
* PUMP CEMENT	5.0	4.0	4	4	20	16	10,660	8,528	5000	4000	15,660	12 528
DETONATE CHARGE	–	–	–	–	–	–	–	–	–	–	–	.
* RAISE CEMENT HOSE	1.0	1.0	4	4	4	4	2,132	2,132	1000	1000	3132	3132
+1 — ~~TRANSIT TO SHORE~~	~~0.5~~	~~0.5~~	31	~~14~~	~~15.5~~	~~7~~	~~6541~~	~~2954~~	~~3550~~	~~7500~~	~~10091~~	~~44~~
FLY TIME	2	2	27	12	54	24	22788	10128	–	–	22,781	101
TRANSIT TO N.O.	19	19.	4	2	76	38	32072	16036	134,900	57,000	166,972	73,036
DEMOB	3	3	20	10	60	30	25320	12,660	21,300	9,000	46,620	21,
ADVANCE PARTY x	7	7	4	4	28	28	11,816	11,816	–	–	11,816	11
+7 TOTALS .	~~76.3~~	~~68.~~			~~1203.3~~	~~492~~	~~510,457~~	~~203,713~~	~~505,130~~	~~192,600~~	~~1015587~~	~~39~~

* DIVER RATE ONLY. ALL OTHER PERSONNEL ITEMS - CREW RATE APPLIES.
** INCLUDES 3 DAYS DECOMPRESSION TIME. DONE SIMULTANEOUSLY DURING OTHER OPERATIONS.

DIVER RATE ONLY = $533.00/MAN/DAY; TOTAL DIVER CREW RATE = $422.00/MAN/DAY
DIVERS EQUIPMENT RENTAL COST: POLY = $7100.00/DAY; FRP: $3000.00/DAY; MIN. 1000.00/DAY.
SUPPORT CREW RATE: 376.00/MAN DAY

8-7-79

DESCRIPT

DIVER & DIVER EQUIP
EQUIPMENT LEASE
- AIRFARE · Ro
SUBSISTENCE
DIVER & SUPPORT L
TOTAL

MANIFOLD FITTING JOINING (7) 12' DIAMETER POLYETHYLENE PIPES MUST BE JOINED HAS A 30' DIAMETER FLANGE AT THE TOP WHICH MATES WITH A FLANGE ON THE SPAR BUOY. BOLT CIRCLE 31' DIA - 144 - 2½" DIA X 24" LONG THREADED STUDS WITH 2 HEX NUTS ON EACH END. EACH BOLT WEIGHS 33 LB (DRY) - 29 LB (IN SALT WATER). EACH NUT WEIGHS 10 LB (DRY) - 9 LB (IN SALT WATER).

JOE ZENO - TAYLOR DIVING (504) 394-6000 WANTS TO RIG UP STAGING ON THE BUOY FLANGE AND UPPER PIPE FLANGE PRIOR TO DEPLOYMENT OF BUOY AND PIPE.

THE METHOD USED IS SATURATION DIVING - INCLUDING DECOMPRESSION CHAMBER. 3 TEAMS OF 3 DIVERS (INCL. TENDER) WILL WORK 4 HOURS ON, 8 HOURS OFF AT THE 300 FOOT DEPTH. TEAMS WILL INSTALL ONE STUD AND 4 NUTS PER HOUR. SO, TOTAL ELAPSED TIME WILL BE 144 HOURS OR 6 DAYS. 22 ADDITIONAL PEOPLE ARE REQUIRED TO SUPPORT THE 9 DIVERS.

DIVERS' EQUIPMENT AND SUPPORT EQUIPMENT WILL BE LOADED ON GMDI FURNISHED BARGE AT NEW ORLEANS. 4 MEN WILL ACCOMPANY THE DIVING EQUIPMENT TRANSITING TO AND FROM JOB SITE. AN ADVANCE PARTY OF 4 MEN WILL SPEND 3 DAYS FOR ORIENTATION AT THE SHORE SITE AND JOB SITE.

9-10-79

OTEC 10/40

POLYETHYLENE PIPE

DIVERS : TAYLOR DIVING JOE ZENO (504) 394-6000

ASSIST IN DEPLOYMENT AT BEACH
    INSTALL COVERS & SCREEN COVER
ASSIST IN LOWERING OF PIPE
    REMOVE COVERS & SCREEN COVER
ASSIST IN IN-HAUL PROCEDURE
    OBSERVE & DIRECT - USE TV CAMERAS
INSTALL BOLTS IN MATING FLANGES
RELEASE IN-HAUL CABLES
ASSIST RAISING CEMENT HOSE INTO BARGE

	ITEM	DAYS		PERSONNEL		MAN DAYS		SEA LABOR COST		LAND EQUIPT COST		TOTAL DIVING COST
		POLY	FRP	POLY	FRP	POLY	FRP	POLY	FRP	POLY	FRP	
	MOBILIZE	7	7	20	10	~~140~~	~~70~~	—	—	—	—	
	FLY TIME	2	2	27	12	54	24			54	24	
	TRANSIT	19	19	4	2	76	38	76	38			
6 —	DEPLOY FROM BEACH	~~4~~	~~4~~	31	14	~~124~~	~~56~~			~~124~~	~~56~~	
	TOW	0.5	0.5	31	14	15.5	7	15.5	7			
	PREPARE & LOWER CWP	5.8	5.3	31	14	179.8	74.2	179.8	74.2			
	KEEL HAUL	4.5	2.5	31	14	139.5	35	139.5	35			
*	INSTALL BOLTS **	7.0	5.2	31	4	217	20.8	217	20.8			
*	PUMP CEMENT	5.0	4.0	4	4	20	16	20	16			
	DETONATE CHARGE	–	–	–	–	–	–					
*	~~RAISE CEMENT HOSE~~	~~1.0~~	~~1.0~~	~~4~~	~~4~~	~~4~~	~~4~~	~~4~~	~~4~~			
r1 —	TRANSIT TO SHORE	~~0.5~~	~~0.5~~	31	14	~~15.5~~	~~7~~	~~15.5~~	~~7~~			
	FLY TIME	2	2	27	12	54	24			54	24	
	TRANSIT TO N.O.	19	19	4	2	76	38	76	38			
	DEMOB	3	3	20	10	60	30	-	-	-	-	
	ADVANCE PARTY ×	7	7	4	4	28	28			28	28	
7	TOTALS	~~76.3~~	~~68~~			1203.3	472	~~743.3~~	~~240~~	~~860~~	~~732~~	

SUBSISTANCE DAYS

* DIVER RATE ONLY. ALL OTHER PERSONNEL ITEMS - C

** INCLUDES 3 DAYS DECOMPRESSI[illegible] TIME. DONE
OTHER OPERATIONS.

DIVER RATE ONLY : $533.00/MAN/DAY; TOTAL DIVER CR

DIVERS EQUIPMENT RENTAL COST: POLY : $7105.00/DAY; FR

SUPPORT CREW RATE : 376.00/manday

GMI-E&C

TELECON SUMMARY NO.

SUBJECT: MAKING UP FLANGED CONNECTION 30' DIA OTEC PIPE

DATE: 8-15-79 10 AM SUMMARY BY:

PARTIES ON CALL: JOE ZENO (504) 394-6000

COMPANY: TAYLOR DIVING

REF:

ITEMS DISCUSSED: WATER DEPTH: MAX = 250'

TYPE OF DIVING: SATURATION TYPE (SAT)

WILL INSTALL 144 BOLTS - TITANIUM HEX HEAD 2½" DIA

		AIR WT	SEA WATER WT.
(132)	x 12" LG	14.08# ea	10.87# ea
(12)	x 24" LG	23.66# ea	18.27# ea
(288)	2½" HEX NUTS	2.91# ea	2.25# ea

BOLT INSERTED IN FLANGE BOLT HOLE - 2 NUTS INSTALLED AND TORQUED. OUTSIDE NUT IS TACK WELDED TO BOLT THREAD.

9 DIVERS WILL WORK. 3 DIVERS ON 4 HOUR TOUR, OFF 8 HOURS.

WILL GET 22 HOURS OF WORK PER DAY. SHOULD INSTALL 2 TO 3 BOLTS COMPLETE PER HOUR (THIS = 53 TO 79 HOURS WORKING).

SAT SYSTEM: INCLUDES HYDRAULIC OPERATED TORQUING TOOL, HYDRAULIC IMPACT WRENCHES, TV SYSTEM, UTILITY LINES, HOT WATER EQUIPMENT, HOT WATER SUITS, BURNING & CUTTING RIG, TACK WELD, HYPERBARIC WELDING EQUIPMENT, DECOMPRESSION CHAMBER.

TOTAL ON SITE CYCLE TIME WILL BE 6 TO 7 DAYS.

FOLLOW-UP REQUIRED:

DISTRIBUTION:
(Participants etc.)

Completion Dates:

1ST DAY

4 HRS RECHECK ALL EQUIPMENT REQUIRED.

2 HRS DIVE (OR LOWER EQUIPMENT & PERSONNEL) TO WORKING DEPTH

53-79 HRS { COMMENCE WORK. / COMPLETE WORK

72 HRS DECOMPRESSION

4 HRS CHECK EQUIPMENT

2 MEN. LINED UP

1 DAY

2ND NUT - 1 DAY

Spotweld, 1 DAY.

REQUIRES THAT 30' DIA CWP FLANGE AND BUOY FLANGE BE LINED UP IN PLANE AND AXIALLY.

1ST DAY - INSTALL BOLTS AND 1ST NUT ALL AROUND.

2ND DAY - INSTALL 2ND NUT AND TORQUE DOWN ALL AROUND.

3RD DAY - SPOTWELD ALL OUTER NUT TO BOLT ALL AROUND.

4TH, 5TH & 6TH DAY - DECOMPRESS.

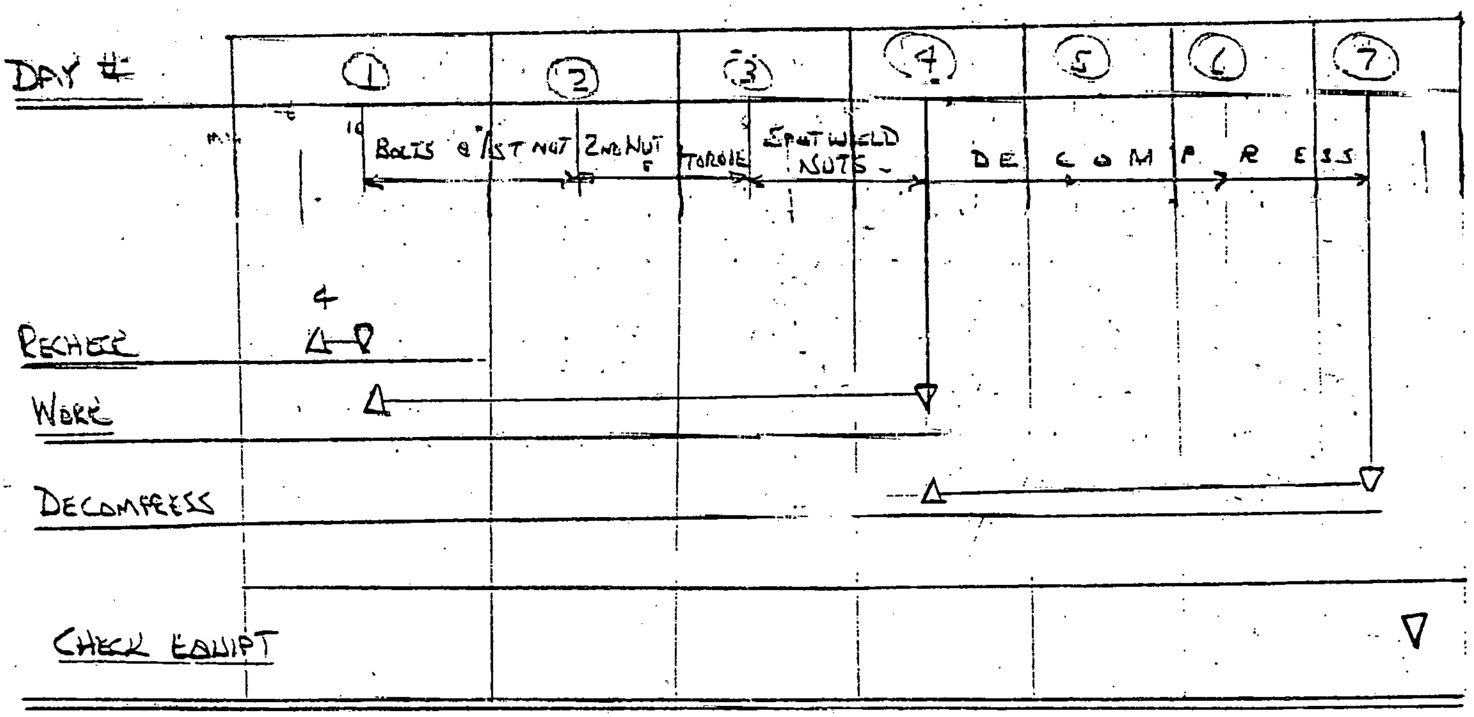

DIVERS WILL WANT TO VISIT SHIPYARD TO VIEW THEIR WORKING AREA AS SPAR BUOY IS BEING BUILT. THEY WILL WANT TO INCORPORATE HAND HOLDS AND OTHER RIGGING INTO CONSTRUCTION OF BUOY.

THE SAME WILL APPLY IN THE MAKE UP OF THE CWP UPPER STEEL PIECE.

8-15-79

DIVING -

MAKE FLANGE CONNECTION
AT 250 FT WATER DEPTH

IS IT: SATURATED DIVING

OR ~~MIXED GAS DIVING~~ ?

WILL INSTALL 144 BOLTS

TITANIUM AL 6-4V 2½" DIA

7.85

4" HEX x 2" x 2½" ϕ x 12" : 16.69

4" HEX x 2" - (2½ ϕ)

	WT. EA		
	STL WT	TIT WT	WT IN SEA WATER
(132) x 12" LG	27.54#	14.08#	10.87#
(12) x 24" LG	41.23#	23.66#	18.27#
+ 2 NUTS ON ONE END OF EACH BOLT ≈	5.07#	2.91#	2.25#

TORQUED TO ___ INCH POUNDS

~~AIR OPERATED~~ HYDRAULIC OPERATED TORQUING TOOL

SAT SYSTEM

INCL HYD IMPACT WRENCHES -
TV SYS
UTILITY
H.W.
GAS
HOT WATER SUIT
BURNING -
CUTTING RIG -
TACK WELD
HYPERBARIC WELDING

3/HR

22 HRS/DAY

WET WELD
6 DAYS

2 DAYS   4 DAYS

JOB 04087-

041100

VENDOR LOG

WBS NO	ITEM	VENDOR	PHONE	NAME	DATE	VENDOR PRICE	DELIVERY
	FLEXIBLE HOSE 4000 PSI BURST ID: 1½"	WARREN & BAILEY	(213) 724-6320	BOB DICK NINGHARLEN	8-6-79	37 K ~~31,300~~	FAS. NEW ORLEANS
7000'	~~6000'~~ IN 30' LENGTHS SAE 100-R-2						
	1250" WORKING JIC SWIVEL ED END + UNION						
							FOB MORGAN CITY, LA
K-24	OIL FIELD TUBING 2 3/8" OD - 4.7#/FT	OIL WELL SUPPLY	213 424-0751	TED DEKKER	8-6-79	2.3438/FT +FRT 460.00	STOCK
7000'	API - J55 TUBING ~~6000~~' IN 30' LENGTHS				LOT =	16,867.	FOB NEW ORLEANS

MADE BY

CHECKED BY

DATE 9-11-79

GLOBAL MARINE DEVELOPMENT INC.

ESTIMATE SHEET

TITLE OTEC 10/40 - PIPE COVERS

W.O. No./A.F.E. No. 4087

SHEETS ____ SHEET NO. ____

DESCRIPTION	QUAN.	UNITS		LABOR	MAT'L	
		L	M			
<u>END COVER</u>						
32' Ø ALLOW 1024 □' HVY PLASTIC SAIL MATERIAL	1		3^{00}/□		3050	
NYLON STRAP - 1' WIDE x 100' LONG	1		3^{00}/FT		300	
<u>SCREEN COVER</u>						
10 MIL THICK POLYETHYLENE SHEET 10' WIDE x 100' LONG:	1000 □'		1^{50}/□'		1500	
NYLON STRAPS - 1' x 100' LG	2		3^{00}/FT		600	
+ MISC -					150	
TOTAL					$	5600.

REFERENCE: <u>ANCHOR CANVAS</u>

04087-041100

8-18-79 2.4 ESTIMATE SHEET FRP CWP INSTALLATION & AT SEA DEPLOYMENT

DESCRIPTION	QUAN.	UNITS		LABOR	MAT'L	Σ
		L	M	$	$	
NON-RECURRING:						
SPECIAL PIPE TOWING HARNESS						
32' DIA HOOPS & CONNECTING STEEL @ 10,000# EACH	4	600	3000	72000	12000	84,000
CABLE ASSY	4	200	10000	24000	40,000	64,000
						148,000
LOWERING CABLE 3½" Φ	4000'				40,000	
FITTINGS					10,000	
ASSEMBLE & TEST		100		3000	300	
						53,300

MADE BY DRL.

GLOBAL MARINE DEVELOPMENT INC.

W.O. No./A.F.E. No. 0987-041100

CHECKED BY

ESTIMATE SHEET

SHEETS ____ SHEET NO. ____

DATE 8-19-79

TITLE 3.4 POLYETHYLENE CWP

DESCRIPTION	QUAN.	UNITS		LABOR	MAT'L	
		L	M			
① MODIFY BARGE						
② INSTALL (2) WINCHES						
③ FAB & INSTALL (2) A FRAMES						
④ BUY (2) WINCHES SKAGIT AED 300						
① MODIFY BARGE						
ADD FOUNDATIONS						
(2) × 3" PL x 16' x 22' = 1056 □'	129300#	80 H/T	.30/#	5172	38790	
WELD ROD .05 =	6465#		.90/#		5819	
= 4 COATS S/B & PAINT 1500□' x 1.3 =	2000 □'	1HR/50□'		160		
+ GRIT PAINT = 10 GAL x 3 =	30 GAL		30^{00}/GAL		1000	
REMOVE FOUNDATIONS				1724		Re-
PAINT				100	600	261K
SUB TOTALS				7156	46209	= 260,889
② INSTALL (2) WINCHES						5K Rec
8 HRS 10 MEN 2 DAYS =				160	200	= 5,000
③ FAB & INSTALL (2) A FRAMES						Non Rec
STEEL	42000#	120 H/T	.40/#	2520	16800	113,570
WR	2100#		.90/#		1890	
+ GRIT x 4 COATS SLB & PAINT	3200□		30^{00}/GAL	256	1600	Rec
+ SHEAVES					10,000	
+ INSTALL		20 H/T		420	600	127K
SUB TOTALS				3196	30890	= 126,770
+ REMOVE				210	300	1894K
④ WINCHES - SKAGIT AED300	2		947,000		1,894,000	= 1,894,000 N.R
TOTALS				10,512	1971299	
MATERIAL = 1971,300	1971,300					
LABOR 10512 MH @ 30^{00}/HR =	315 360					
	2286,660					20K
INSTALL & REMOVE	K-27			630	900	= 19800 Rec

(4) 16WF80# x 20' = 80'
(2) x 30' 60'
(4) x 10' 40'
180' x 80# = 14400#

SHEAVE 5000

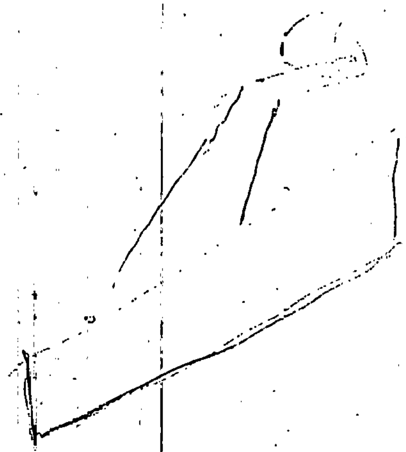

14400#
30% PL + WEBS 4320#
18720
SCRAP + 10% 1872
21000# @ .40 =
1050# @ .90 =

PAINT ~~64~~ 6' x 200' : WR 1200 □'
1.3 + o/s : 1600 □'
+ 6R
6400 □' @ 500 □'/1HR

24 GAL @ 30.00 800
128 HRS

K-28

GMI-E&C

TELECON SUMMARY NO.

SUBJECT: OTEC 10/40 MAXIMUM DENSITY - CONCRETE TO BE PUMPED TO 3000' WATER DEPTH.

DATE: 8/3/79 SUMMARY BY: D.B. SIMPSON

PARTIES ON CALL: (405) 251-3577 GENE BRODDUS (MUD MAN)

STAN SARHOCK (405) 251-3427 WARREN OSTROOT (CONCRETE MAN)

COMPANY: HALLIBURTON GENE BRODDUS (405) 251-3577 MUD MAN

REF: 213) 864-2551

ITEMS DISCUSSED:

20-22#

#/GAL 21#/GAL SOME SAND FOR CLEANING

18-20#/GAL W/O AGGREGATE

WARREN OSTROOT (405) 251-3427 CONCRETE MAN

25#/GAL IN IRAN. NO

GROUTING DEPT -

HEMATITE ORE - FINE MESH 40.5 HRS 36.8 HRS

810 CY 736 CY

22# ~~24#~~ 21,875 CF 19882 CF

163,636 GAL 148 727 GAL

AIRWEIGHT 164.6#/CU FT WET WEIGHT = 100.6#/CU FT

DRY: 3.600 MM# DRY 3.272 MM

2.2 MM# 2 MM#

FOLLOW-UP REQUIRED: FOB VENICE LOUISIANA -

PREMIX AT VENICE - LOAD ON GMDI BARGE - 25 PEA TANKS

MIXING EQUIPMENT & PERSONNEL 451 $410,000

76 70,000

+ GMDI FURNISHED TUBING OR 537,000 X 480,000

FLEX HOSE -

DISTRIBUTION:
(Participants etc.)

Completion Dates: 31 300

512 K

+ TANK 261 K

773 K

RATE OF PUMP 20 CY/HR

FOR JIM SCHAFF

8/1/79

WT. OF CONCRETE (DENSITY)

THAT CAN BE PUMPED DOWN TO 3000'

WATER DEPTH -

						25#/GAL	22#/GA
DRY WT =	120#	130#	150#	160#	157.25 -	187#	
WET WT =	56#	66#	86.25#	96.4	93.3	131.8	
	.467	.500	.575	.613	.593	.705	

PUMP FROM SURFACE VESSEL THRU HOSE OR PIPE

INTO STEEL TANK LIKE CONTAINER -

NOT AT BOTTOM - BUT SUSPENDED BY

CABLES -

CALL NEVILLE MOSES x 119
9+1 1-800 1 231-6108   978-4119

20-22   HALLIBURTON   DUNCAN, OKLA   (405) 251-3760

1 GAL = 231 CU IN
= 0.1336806 CU FT

20#/GAL = 20#/0.1336806 CU FT
= 149.6#/CU FT

	AIR WEIGHT	WT IN SALT WATER
18#/GAL =	134.6#/CU FT	70.6#
20#/GAL =	149.6#/CU FT	85.6#
IRAN 25#/GAL =	187.0#/CU FT	123. #

7.4805 GAL/CU. FT.

PER STAN SHEYOCK: 22#/GAL = 164.6#/CU FT = 100.6#/CF

HALLIBURTON
SERVICES

Low Water Loss Additives for Cement

In certain cementing applicaions, particularly squeeze ceenting, it is desired to keep the ement slurry fluid for the entire queezing operation without llowing it to dehydrate under ressure. In zones of high ermeability, the rapid dehydraion of conventional cementing lurries limits the amount of cenent that can be pumped to obtain n effective shut-off of water, oil r gas. The addition of small quanities of certain low fluid loss adlitives builds up a filter cake imiting the loss of water from the lurry under pressure. This type of ement may also be effective in ormations containing shales or entonitic sands that are sensitive o fresh water. Six products for his type of application are available through Halliburton bulk cement stations.

Halad®-9 Additive

Halad-9 is a water loss control additive for cementing compositions. It was developed by the Halliburton Chemical Research and Development Laboratories for primary or squeeze cementing. This material is a free flowing powder that can be added to the dry cement or to the mixing water. In most cements one per cent has been found to provide adequate fluid loss control for most conditions. Usually 0.6 to 1.0 per cent is adequate for squeeze cementing and will produce a fluid loss from 50 to 150 cc, as measured on 325 mesh screen under 1,000 psi pressure. However, the fluid loss of different compositions can be varied to fit most well requirements by raising or lowering the concentration of Halad-9 additive. The principal advantages of Halad-9 additive in a cementing composition are shown below.

HALAD-9 ADDITIVE FOR SQUEEZE CEMENTING

- Reduces premature dehydration in tubing and casing while squeezing perforations.
- Long perforated intervals can often successfully be squeezed in a single stage.
- Satisfactory squeeze results at low pressures without over displacing.
- High pressure by hesitation technique with filter cake buildup in perforations.
- For water sensitive shale sections that may weaken and break down due to cement filtrate. Granular bridging material may also be helpful.
- Reduces the amount of filtrate which can penetrate formations containing water sensitive clays.

HALAD-9 ADDITIVE FOR CASING CEMENTING

- Reduces possibility of water and/or emulsion blocks, and blocks caused by clay swelling

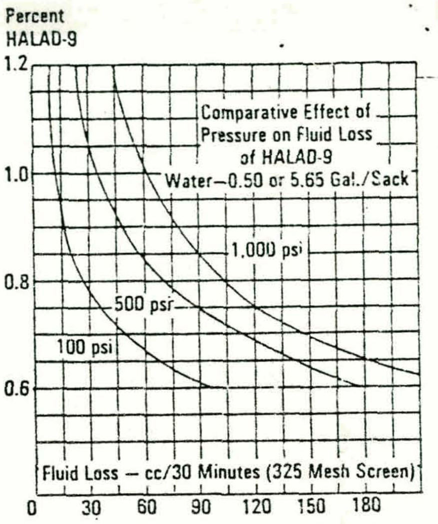

TYPICAL VALUES FOR PORTLAND CEMENT API CLASSES A-G-H

SLURRY PROPERTIES

HALAD-9 Per Cent	WATER		WEIGHT		Volume cu ft/sk
	gals/sk	cu ft/sk	lbs/gal	lbs/cu ft	
0.0	5.2	0.70	15.60	117	1.18
1.0	5.6	0.75	15.30	114	1.23

FLUID LOSS—cc/30 Minutes

HALAD-9 Per Cent	SLURRY VISCOSITY—POISES		FLUID LOSS—325 MESH SCREEN		
	Initial	20-Minute	100 psi	500 psi	1000 psi
0.0	3	10	..	...	960
0.6	4	11	96	178	250
0.8	4	11	24	70	100
1.0	5	12	14	32	60
1.2	10	15	10	24	43

THICKENING TIME—HOURS: MINUTES

HALAD-9 Per Cent	API CASING TESTS—Feet				API SQUEEZE TESTS—Feet			
	2,000	4,000	6,000	8,000	2,000	4,000	6,000	8,000
0.0	3:00+	2:46	2:15	2:05	3:00+	2:09	1:12	0:52
0.8	4:00+	3:00+	3:00+	3:00+	3:00+	3:00+	3:00+	2:17
1.0	4:00+	3:00+	3:00+	3:00+	8:00+	3:00+	3:00+	2:20
1.2	4:00+	3:00+	3:00+	3:00+	3:00+	3:00+	3:00+	2:47

COMPRESSIVE STRENGTH—PSI

HALAD-9 Per Cent	SET SLURRY—24 HRS. API CURING CONDITIONS			DEHYDRATED CORES—3 HRS.	
	800 psi 95°F	1600 psi 110°F	3,000 psi 140°F	800 psi 95°F	3,000psi 140°F
0.0	2085	2925	4545	....	....
0.8	980	1380	3515	2400	12,400
1.0	800	1290	3440	2080	12,200
1.2	580	1005	3525	400	12,100

PORTLAND CEMENT WITH 2 PER CENT CALCIUM CHLORIDE

0.8	2075	4225	4000+	3160	12,000+
1.0	1975	3625	4000+	3400	12,000+
1.2	1920	3490	4000+	3280	12,000+

Cement Accelerators

Several products are available through Halliburton bulk stations for accelerating the early strength of oil well cementing slurries. Small additions of these materials in cement reduce waiting on cement time, promote greater early strength and result in a saving of rig time to the operator.

HA-5

HA-5 is a patented and improved cement accelerator for use in Pozmix® cement, portland or Hi-Early cement in shallow wells or on surface pipe to reduce the waiting on cement time. More rapid setting and higher early compressive strengths are achieved by the use of this product with cements having high C_3A content. For maximum acceleration, 2 to 3 per cent of HA-5 should be added to the dry cement or to the mixing water. At normal temperatures, waiting on cement times can be reduced to approximately 4 to 8 hours, depending on the cementing composition and strength desired at the time of drilling out.

Calcium Chloride

Available in powdered or flake form, calcium chloride in quantities of approximately two per cent is very effective in accelerating the early strength of portland, Hi-Early or Pozmix cement. Either form can be added to the mixing water or blended with the bulk cement at the plant.

Calcium chloride has other oil field applications such as accelerating the strength of concrete for derrick piers, concrete foundations for engines, boilers, etc. In cold weather it also functions as an antifreeze for portland cement concrete.

Densified Cements

High strength cement plugs may be placed in the hole for setting whipstocks, plugbacks or bridges with reduced waiting time when the slurry is prepared with Halliburton's cement densifiers.

The incorporation of Halliburton CFR additives in either API Class A, B, D, E, G, H, or Pozmix cements provides improved dispersion of the cement particles and permits the use of a much lower water-cement ratio. The reduction in water results in a more rapid compressive strength development. Strengths normally developed by neat cement in 24 hours can often be reached in 8 hours with densified cement; yet the thickening time or pumping time can be controlled to permit slurry placement under normal bottom-hole conditions.

The incorporation of these cement densifier admixes with a decrease in water-cement ratio results in higher slurry densities. Slurry densities approaching 18.0 pounds per gallon are possible without the addition of weighting materials.

Sodium Chloride

In areas where HA 5 or calcium chloride is not available, 2 to 8 per cent sodium chloride (salt) can be used effectively when dry blended with cement to accelerate the early strength. While the resulting strengths are not as great as with other accelerators, it is an effective accelerator in small concentrations.

Halliburton Permafrost® Cement

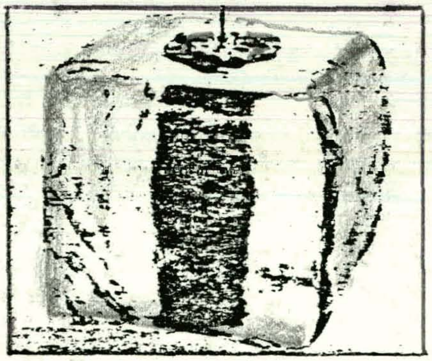

Permafrost®Cement set in block of ice.

Halliburton Permafrost cement was developed to provide cement for surface casing and conductor pipe from 15° to 80°F. The rapid strength development makes this composition ideal for low temperature wells or permafrost environment and results in an economic savings due to short WOC times.

Permafrost cement has been formulated for:

- Low heat of hydration so as to not thaw frozen formations
- Minimum two hour pumping time from 30°F to 80°F
- Lost circulation control
- Slurry protected from freezing to 20°F
- Minimum 24 hour compressive strength of 500 psi at 20°F.

Cal-Seal

For lost circulation or to help control a high pressure gas zone, equal parts by weight of Cal-Seal with portland or Pozmix cement can be used to produce a rapid setting material with a pumping time of approximately 20 minutes. This product can be pumped in wells of shallow depths but the final strength is not as great as when using HA-5 or calcium chloride. (See lost circulation, page 3226.)

Diacel A

A powdered form of sodium silicate recommended for use only in accelerating the set of cement when Diacel LWL low fluid loss additive is used. While it is not as effective as either HA-5 or calcium chloride, it is the most suitable accelerator for counteracting the retarding effect of this particular low water loss material. (See Diacel LWL, page 3209.)

Heavy Weight Additives

Materials may be added to Pozmix® cement or Pozmix 140, portland or retarded cements to increase the density of slurries in deep wells where it is desired to have the weight of the cement near that of the drilling mud at the time of cementing for the control of high pressure oil and gas zones. Four materials are sold by Halliburton for this application as follows:

Hi-Dense® No. 3

To meet the increasing demand for heavy weight cement slurries, Halliburton now offers Hi-Dense® No. 3 additive. This heavy mineral has a specific gravity of 5.02 and a select particle size, fine enough to minimize any settling when pumping highly dispersed slurries containing CFR-2 on deep liner jobs.

Hi-Dense No. 3 additive, as its predecessors, functions only as an inert substance in cement for providing densities to 20 pounds per gallon, plus. It is very compatible with fluid loss agents, retarders, and densifiers commonly used in deep hot wells.

Densified Cements

See page 3210

Barite

Barite, commonly used for weighting drilling muds, may also be used for oil well cements; however, it is not as effective as Hi-Dense No. 3 additive due to its finer grind. It absorbs more water and requires more material to achieve the same slurry weight compared to Hi-Dense No. 3 additive. Barite, having a specific gravity of approximately 4.23, can be used satisfactorily in areas where Hi-Dense No. 3 additive is not available, although it materially reduces compressive strengths.

Ottawa Sand

Ottawa sand can be used effectively to obtain slurries of moderate weights due to its low water requirements. The addition of sand to cement increases the strength due to an increase in the ratio of solids to water in the slurry. While not as effective as Hi-Dense No. 3 additive, it can be used as a substitute to obtain slurries of approximately 17.0 pounds per gallon.

RETARDED CEMENTS WEIGHTED WITH VARIOUS MATERIALS

Slurry Weight (lbs. per gal.)	Pounds Per Sack of Cement		
	Regular Barite	Ottawa Sand	Hi-Dense No. 3
16.25	—	—	—
17.00	22	28	12
17.50	37	51	20
18.00	55	79	28
Specific Gravity	4.23	2.63	5.02

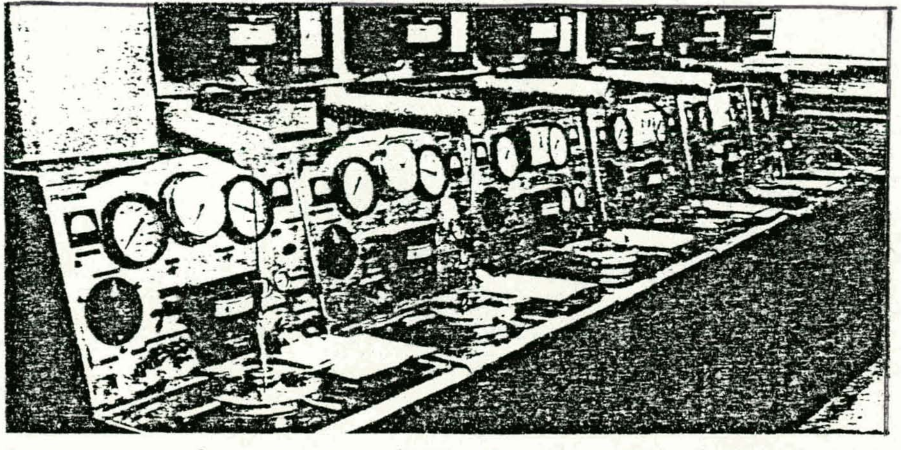

Part of Halliburton Services' battery of Pressure-Temperature Thickening Time Testers in the Chemical Research and Development department's cement section at the Duncan (Okla.) Research Center. Other of these high pressure testers are maintained at Halliburton's field service laboratories around the world.

Cement Retarders

Halliburton's variety of cement retarders makes possible the formulation of cementing compositions for any range of high temperature well conditions. These products can be blended to a high degree of uniformity in Halliburton bulk blending plants and are compatible with API Classes A, B, D, E, G and H Cements, Pozmix® cement or Pozmix 140 cement.

HR-4

This is a chemical cement retarder recommended for use in wells where temperatures are too high for common portland or regular Pozmix cement. A small amount of HR-4 retarder added to the cement provides safer pumping times with a minimum reduction in the 24 hour compressive strength. For extremely deep, hot wells, HR-4 can be blended with Pozmix 140 cement to provide longer pumpabilities than can be obtained in regular portland type cements.

HR-5

HR-5 is a new improved cement retarder which has been developed for use in cementing operations involving circulating temperatures of 206°F or less. HR-5 is a chemically modified lignosulfonate. HR-5 is compatible with all API cements, Pozmix® A and bentonite cement. HR-5 shows improved performance in that it gives uniform increase in thickening time for each increase in retarder concentration. HR-5 behaves more similarly in a wide variety of cement slurries. Thus, the chemically modified lignosulfonate retarder is generally more predictable in performance, especially with specific brands of cement. HR-5 does not exhibit any tendency to gel the slurries when used in either fresh water or salt water cement slurries. As a result, HR-5 provides the desired pumping times and allows earlier strength development. *HR-6L, a water solution of HR-5,* has been introduced to provide the industry with a liquid retarder for offshore locations or locations lacking in bulk blending facilities.

VENICE LOUISIANA

PREMIX - & LOAD

25 PER TANKS $ 410 000

MIXING EQUIP & PERSONNEL 69,262

479,262 ≑ $480,000

+ OIL FIELD TUBING 3000-4000 PSI

2 3/8 OD

API

2 3/8 4.7# PER FT. - UP- J 55 TUBING

X 30' LEN

FLEXIBLE HOSE BURST 22#

4000 PSI BURST

MIN DIA ID 1 1/2"

EASTMAN PACIFIC

2 - LINES

6000'