RHO-C-7

Battelle

Columbus Laboratories

Report

MASTER

DISTRIBUTION OF THIS DOCUMENT IS UNLIMITED

DISCLAIMER

This report was prepared as an account of work sponsored by an agency of the United States Government. Neither the United States Government nor any agency Thereof, nor any of their employees, makes any warranty, express or implied, or assumes any legal liability or responsibility for the accuracy, completeness, or usefulness of any information, apparatus, product, or process disclosed, or represents that its use would not infringe privately owned rights. Reference herein to any specific commercial product, process, or service by trade name, trademark, manufacturer, or otherwise does not necessarily constitute or imply its endorsement, recommendation, or favoring by the United States Government or any agency thereof. The views and opinions of authors expressed herein do not necessarily state or reflect those of the United States Government or any agency thereof.

DISCLAIMER

Portions of this document may be illegible in electronic image products. Images are produced from the best available original document.

TOPICAL REPORT

on

ANALYSIS OF THE FACTORS THAT IMPACT THE RELIABILITY OF HIGH LEVEL WASTE CANISTER MATERIALS

to

ROCKWELL HANFORD OPERATIONS
ROCKWELL INTERNATIONAL CORPORATION

September 19, 1977

by

W. K. Boyd and A. M. Hall

NOTICE
This report was prepared as an account of work sponsored by the United States Government. Neither the United States nor the United States Department of Energy, nor any of their employees, nor any of their contractors, subcontractors, or their employees, makes any warranty, express or implied, or assumes any legal liability or responsibility for the accuracy, completeness or usefulness of any information, apparatus, product or process disclosed, or represents that its use would not infringe privately owned rights.

BATTELLE
Columbus Laboratories
505 King Avenue
Columbus, Ohio 43201

DISTRIBUTION OF THIS DOCUMENT IS UNLIMITED

TABLE OF CONTENTS

	Page
EXECUTIVE SUMMARY	i
INTRODUCTION	1
Background	1
Objective of the Analysis	2
TECHNICAL EVALUATION	2
Plan of the Investigation	2
Phase 1. Identification and Analysis of Potential Threats to Canister Integrity	4
In-Can Zone Melting to Produce a Glass-Type Waste Form	4
Process Description	4
Impact on the Canister - Metallurgical Factors	7
Impact on the Canister - Environmental Factors	13
Continuous Ceramic Melter to Produce a Glass-Type Waste Form	14
Process Description	14
Impact on the Canister - Metallurgical Factors	16
Impact on the Canister - Environmental Factors	17
Fluid-Bed Calcination Plus Stabilization to Produce a Calcine-Type Waste Form	17
Process Description	17
Impact on the Canisters - Metallurgical Factors	19
Impact on the Canisters - Environmental Factors	19

TABLE OF CONTENTS
(continued)

	Page
Continuous Melting Plan Devitrification to Produce a Glass-Ceramic-Type Waste Form.	20
Process Description.	20
Impact on the Canister - Metallurgical Factors.	20
Impact on the Canister - Environmental Factors.	22
Interim Storage in Water	22
Process Description.	22
Impact on the Canister - Metallurgical Factors.	23
Impact on the Canister - Environmental Factors.	28
Interim Storage in Air	31
Process Description.	31
Impact on the Canister - Metallurgical Factors.	35
Impact on the Canister - Environmental Factors.	38
Shipping	40
Description of Wet and Dry Alternatives	40
Impact on the Canister - Metallurgical Factors.	40
Impact on the Canister - Environmental Factors.	42
Geologic Storage	42
Description of Concept	42

TABLE OF CONTENTS
(continued)

Page

Impact on the Canister - Metallurgical Factors. 44

Impact on the Canister - Environmental Factors. 46

Phase 2. Fabrication and Quality Assurance. 48

Fabrication. 48

Canister 48

Overpack 48

Welding of High-Level Waste Canisters. 49

Metallurgical Factors Influencing the Weldability of Type 304 L Stainless Steel. 50

Welding Processes and Procedures . . . 51

Surface Preparation. 55

Stress Relief. 56

Postweld Nondestructive Inspection 57

Phase 3. Alternative Canister Materials and Canister Systems 59

Alternative Canister Materials 59

CONCLUSIONS. 61

RECOMMENDATIONS. 67

REFERENCES 72

LIST OF FIGURES

Figure 1. In-Can Melting to Produce a Glass-Type Waste Form 5

Figure 2. British Rising Level Glass Process (Fingal/Harvest) . . . 9

Figure 3. Creep and Rupture Data for 304 L Stainless Steel Plate Tested at 1100 C. 11

LIST OF FIGURES
(continued)

		Page
Figure 4.	Time-Temperature-Precipitation Curves Showing The Effect of Changing Carbon Content in Austenitic 18% Chromium Steels Containing 10.5 to 11.0% Nickel.	12
Figure 5.	Continuous Ceramic Melter	15
Figure 6.	Fluid-Bed Calcination Plus Stabilization.	18
Figure 7.	Process for Producing a Glass-Ceramic-Type Waste Form.	21
Figure 8.	The Water-Basin Concept (WBC) for Interim Storage of Solidified High Level Waste.	24
Figure 9.	Projected Temperature Response After Instantaneous Water Loss in Water Basin Concept	26
Figure 10.	Sealed Storage Cask Concept (SSCC) for Interim Storage of Solidified High-Level Waste.	32
Figure 11.	Sealed Storage Cask Concept - Medium Wall (SSCC-MW) . . .	33
Figure 12.	Sealed Storage Cask Concept - Thick Wall Storage Unit on Concrete Pad.	34
Figure 13.	Overpack and Canister Assembly for Use in the Air-Cooled Vault Concept (ACVC)	36
Figure 14.	Air-Cooled Vault Concept (ACVC) for Interim Storage of Solidified High-Level Waste.	37
Figure 15.	A 60-Ton Shipping Container Using Lead Shielding.	41
Figure 16.	Concept of a Bi-Level Geologic Storage Facility	45
Figure 17.	Setup for Automatic Welding of Longitudinal Butt Joints	52
Figure 18.	Use of a Pedestal Boom Manipulator for Making A Circumferential (Girth) Weld.	53
Figure 19.	Housing for a Nuclear-Reactor Component That was Welded in the Lathe Setup to Maintain Critical Alignment, and for Which Consumable Insert Rings Were Used for Root Passes, to Ensure Weld Soundness	54

LIST OF TABLES

		Page
Table 1.	Composition of High-Level Liquid Waste	8
Table 2.	Water Basin and Water Basin Overpack Storage Array Temperatures	28
Table 3.	Effect of Environmental Sequences for Waste Solidification and Interim Storage	63
Table 4.	Effect of Environmental Sequences for Shipping	65
Table 5.	Effect of Environmental Sequences for Geologic Storage	66

EXECUTIVE SUMMARY

A High-Level Waste Canister Envelope study program has been initiated in connection with the National Waste Terminal Storage Program being conducted by the Office of Waste Isolation. The canister study program is being undertaken because of the hazards involved in solidifying, transport, and storage of high-level wastes and because the operations and procedures involved have not yet been reduced to practice. The prime responsibility for the study has been assigned to the Rockwell-Hanford Company. As a part of the study, Battelle's Columbus Laboratories was contracted by Rockwell-Hanford to analyze the factors that may impact the reliability of the waste canister.

The Battelle-Columbus analysis encompassed identification and analysis of potential threats to canister integrity arising in the course of waste solidification, interim storage at the fuels reprocessing plant, wet and dry shipment, and geologic storage. Also, the analysis covered discussion of fabrication techniques and quality assurance requirements necessary to insure optimum canister reliability taking into account such factors as welding procedure, surface preparation, stress relief, remote weld closure, and inspection methods. Finally, alternative canister materials and canister systems were brought under consideration in terms of optimum reliability in the face of threats to the canister's integrity, ease of fabrication, inspection, handling and cost.

Based on the data collected and the observations made in the course of the investigation, several suggestions are offered as to preferred sequences to insure the reliability and integrity of the canister. If interim storage in air is admissible, the sequence suggested comprises producing a glass-type waste product in a continuous ceramic melter, pouring into a carbon steel or low-alloy steel canister of moderately heavy wall thickness, storing in air upright on a pad and surrounded by a concrete radiation shield, and thereafter placing in geologic storage without overpacking.

Should the decision be to store in water during the interim period, then use of either a 304 L stainless steel canister overpacked with a solution-annealed and fast-cooled 304 L container, or a single "high-alloy" canister, is suggested. The "high alloy" may be Inconel 600, Incoloy Alloy 800, or Incoloy Alloy 825. In either case, it is suggested that the container be overpacked with a moderately heavy wall carbon steel or low-alloy steel cask for geologic storage to ensure ready retrievability.

On the other hand, a carbon-steel or low-alloy steel canister could be used for interim storage in water if loading the water with the corrosion products formed from the rusting of the steel could be tolerated. In this case, if the canister has a moderately thick wall, overpacking would not be necessary for geologic storage.

The Battelle-Columbus study was initiated on June 20, 1977, and concluded on September 15, 1977, a period of 13 weeks.

TOPICAL REPORT

on

ANALYSIS OF THE FACTORS THAT IMPACT THE RELIABILITY OF HIGH LEVEL WASTE CANISTER MATERIALS

to

ROCKWELL HANFORD OPERATIONS
ROCKWELL INTERNATIONAL CORPORATION

from

BATTELLE
Columbus Laboratories

by

W. K. Boyd and A. M. Hall

September 19, 1977

INTRODUCTION

Background

In early 1976, the Office of Waste Isolation initiated the management of the National Waste Terminal Storage Program. The purpose of this program is to provide facilities in certain geologic formations at selected locations for the terminal storage of solidified radioactive wastes produced by the commercial nuclear power industry.

The Code of Federal Regulations stipulates that the liquid high-level waste resulting from the reprocessing of spent nuclear fuels be converted to a dry solid and placed within a sealed canister within 5 years after reprocessing and transferred to a repository within a 10-year period after reprocessing. The high-level waste must be safely contained from the time of solid fixation until the end of the retrieving period at the geologic storage site.

From the safety standpoint, failure of the waste canister during loading, handling, or storage presents a great potential hazard. A number of failure mechanisms are possible.

Because of the hazards involved and the fact that solidification, interim storage, transport, and geologic storage of high-level wastes from nuclear electric-power stations have not yet been reduced to practice, a High-Level Waste Canister Envelope study program has been initiated. The prime responsibility for this study has been assigned to the Rockwell Hanford Company, a prime contractor of the U.S. Energy Research and Development Administration, which is engaged in the chemical processing and management of radioactive wastes. The major objective of the study is to define design criteria for canisters that will contain the solidified high-level waste. As a part of the study Rockwell Hanford contracted for the services of Battelle's Columbus Laboratories to perform a critical analysis of the factors that may impact the reliability of the waste canister.

Objective of the Analysis

The major objective of the analysis is to identify all the factors, both metallurgical and environmental, and to critically assess their impact on the reliability and service life of high-level canister materials. A further objective is to identify alternative materials, fabrication techniques, environmental controls, and quality-control procedures which will ensure optimum canister reliability.

TECHNICAL EVALUATION

Plan of the Investigation

As directed by Rockwell Hanford, the reference canister material is assumed to be AISI 304 L stainless steel. Likewise, the

canister is assumed to be subjected to the following environmental sequences:

A. Waste Solidification
   (1) In-can melting to produce a glass-type waste form (zone melting techniques)
   (2) Continuous ceramic melter to produce a glass-type waste form
   (3) Fluid bed calcination plus stabilization to produce a calcine-type waste form
   (4) Continuous melting plus devitrification to produce a glass-ceramic-type waste form.
B. Interim Storage at Fuels Reprocessing Plant
   (1) Storage in water
   (2) Storage in air.
C. Shipping Wet or Dry
D. Geologic Storage (must be retrievable within a period of 5 years)
   (1) Salt formation
   (2) Shale formation
   (3) Granite formation.

The above list comprises 48 separate environmental sequences each of which was analyzed for potential threats to the canister's integrity. In so doing, the following factors were considered:

(1) Canister design
(2) Composition of the waste in each of the three waste solidification concepts
(3) Temperatures anticipated in each of the 48 environmental sequences

(4) Environmental control and anticipated conditions with and without off-specification operation for the interim storage, shipping, and geologic storage
(5) Canister material composition
(6) Surface finishes
(7) Decontamination requirements and sequences.

In addition, fabrication techniques and quality assurance requirements necessary to ensure optimum canister reliability were identified and assessed. Alternative design and fabrication techniques were evaluated from the standpoint of corrosion resistance, ease of fabrication, ease of inspection, and economics. Likewise, trade-offs were considered.

Finally, alternative canister materials and canister systems were analyzed in terms of optimum reliability against threats to the canister's integrity, ease of fabrication and decontamination, inspection, handling, and cost. Attention was paid to overpacking the canister.

Details of the various sequences and discussions of their impacts on the canister are provided in the sections that follow. Process descriptions are based primarily on the five-volume report ERDA-76-43[1*].

Phase 1. Identification and Analysis of Potential Threats to Canister Integrity

In-Can Zone Melting to Produce a Glass-Type Waste Form

Process Description. This is a two-step process in which high-level liquid waste is first calcined and then melted. Figure 1

(1*) References are listed at the end of the report.

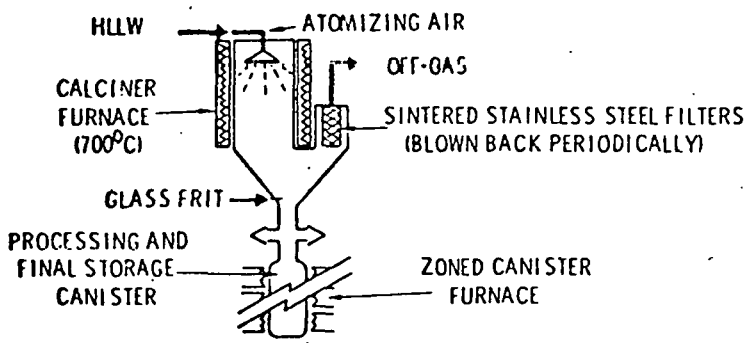

FIGURE 1. IN-CAN ZONE MELTING TO PRODUCE A GLASS-TYPE WASTE FORM[1]

shows heated-wall spray calcining because this method has been most fully developed for coupling to an in-can melter. However, other calcining methods could be used.

The high-level liquid waste is pumped to an atomizing nozzle located in the center at the top of the calciner, atomized to small droplets with air, which are dried and calcined in flight in the calciner. The operating temperature of the calciner is 700 C. Wall-mounted pneumatic vibrators, activated periodically, prevent scale build-up. The short calcining time inhibits volatilization of radionuclides.

Because calcining is continuous, while melting is a batch process, two furnaces are set up under the calciner with a diverter valve in the duct connecting the calciner to the furnace. Just above the diverter, glass-forming frit is added to the calcine from a hopper through an air lock. The furnaces, of course, are operated alternately.

The empty canister is heated to the melting temperature of the glass, i.e., 1050 - 1150 C[2]. Then melting is started at the bottom of the canister and as the melt begins to fill the canister the temperature below the melt level tends to rise above the processing temperature due to heat generated by the waste. Therefore, the furnace zones are turned off successively as the melt level rises above them, and cooling is initiated in these zones. Thus, a longitudinal as well as a radial thermal gradient develops.

One plan is to leave the filled canister in the furnace and let it cool naturally to 700 C, then held at 700 C to stabilize the temperature longitudinally. When this is accomplished the canister is removed from the furnace and placed in a cooling chamber where it can be cooled at faster rates. The cooling rate from the melting temperature must be such that the glass cools fairly rapidly to temperatures well below about 900 C to avoid devitrification. On the other hand, if cooling occurs fast the glass will fracture severely. In any case, on cooling from the melting temperature, the glass shrinks much less than the canister because of its substantially smaller thermal expansion coefficient. Therefore, on reaching room temperature the canister is in tension.

Another plan is to force-gas cool the canister to 900 C, hold to equalize temperature, gas quench to about 400 C, and water quench to 80 C[3]. This cooling regime is expected to result in some fracturing of the glass.

After cooling from the in-can melting operation, the canister is closed with a lid that features a mechnical lock and a seal weld. After welding, plans call for stress relieving the canister at 1000 C.

Typical composition of the resulting glass is 20 - 40 percent SiO_2, 10 - 15 percent B_2O_3, 5 - 10 percent alkali metal oxides, 0 - 20 percent ZnO, and 20 - 35 percent waste oxides. The composition of the high-level liquid waste from which the waste oxides are derived is shown in Table 1. The specific volume is 60 - 80 ℓ/MTU; the density is 3.0 - 3.6 g/cc; the thermal conductivity 0.9 - 1.3 $Wm^{-1}{}^{\circ}C^{-1}$, and the leach rate 10^{-4} - 10^{-7} g cm^{-2} day^{-1}.

As melted in the canister, the product is a slightly fractured monolith containing minor amounts of dispersed crystalline phases, principally cerium oxide. If melted at higher temperatures, i.e., toward 1400 C, more waste oxides could be assimilated and more SiO_2 could be included which would increase the stability of the glass product.

Another version of the zone-melting process which produces a glass-type waste form, that should be mentioned, is the British Rising Level Glass Process (FINGAL/HARVEST). This process is illustrated schematically in Figure 2. The feature of the process is that drying, calcining, and vitrification all take place in the canister. The process temperature is 1050 C.

Impact on the Canister - Metallurgical Factors. The reference canister material, 304 L stainless steel, was designed for superior resistance to intergranular corrosion, especially under circumstances precluding reheating after welding. Definitely, this steel was not developed for high-temperature applications and, consequently, does not possess useful strength at very high temperatures except for short periods of time, i.e., a few hours. Its counterpart, 304, generally is not used above 815 C in load-carrying applications. To expect 304 L to

TABLE 1. COMPOSITION OF HIGH-LEVEL LIQUID WASTE[1]

	Concentration, moles/ℓ @ 378ℓ/MTU			Kilograms Nonvolatile Oxide/MTU	
	Constituent	Possible Range	Reference for this Document[a]	Constituent	Reference for this Document
Inerts (Reprocessing Chemicals)	H^+	1-7	2.0	---	---
	Na	0-3.0	0.01	Na_2O	0.12
	Fe	0.05-1.4	0.054	Fe_2O_3	1.6
	Cr	0.01-0.04	0.0096	Cr_2O_3	0.28
	Ni	0.005-0.02	0.0034	NiO	0.19
	$PO_4^{\equiv}$	0.025-0.30	0.042	P_2O_5	1.1
	$SO_4^{\equiv}$	0-0.90	0	$SO_4^{=}$	0
	NO_3^-	2.7-20	3.6	---	---
	F^-	0-0.25	0	F^-	0
	Gd[b]	0-0.2	0.150	Gd_2O_3	10.0
	B[b]	0-5.0	0	B_2O_3	0
	Cd[b]	0-1.5	0	CdO	0
				Subtotal	13.0
Fission Products	Rb	(c)	0.0095	Rb_2O	0.34
	Sr	(c)	0.017	SrO	0.68
	Y	(c)	0.0095	Y_2O_3	0.41
	Zr	(c)	0.074	ZrO_2	3.5
	Mo	(c)	0.071	MoO_3	3.9
	Tc	(c)	0.017	Tc_2O_7	1.0
	Ru	(c)	0.044	RuO_2	2.2
	Rh	(c)	0.011	Rh_2O_3	0.53
	Pd	(c)	0.030	PdO	1.4
	Ag	(c)	0.0015	Ag_2O	0.067
	Cd	(c)	0.0016	CdO	0.078
	Sn	(c)	0.0009	SnO_2	0.052
	Sb	(c)	0.0002	Sb_2O_3	0.013
	Te	(c)	0.0078	TeO_2	0.47
	Cs	(c)	0.039	Cs_2O	2.2
	Ba	(c)	0.023	BaO	1.3
	La	(c)	0.018	La_2O_3	1.1
	Ce	(c)	0.034	CeO_2	2.2
	Pr	(c)	0.016	Pr_6O_{11}	1.1
	Nd	(c)	0.055	Nd_2O_3	3.5
	Pm	(c)	0.0005	Pm_2O_3	0.035
	Sm	(c)	0.012	Sm_2O_3	0.80
	Eu	(c)	0.002	Eu_2O_3	0.13
	Gd	(c)	0.001	Gd_2O_3	0.076
				Subtotal	27.0
Actinides	U	0.011-0.22	0.053	U_3O_8	5.7
	Np	(c)	0.003	NpO_2	0.31
	Pu	0.0001-0.006	0.002	PuO_2	0.17
	Am	(c)	0.009	Am_2O_3	0.96
	Cm	(c)	0.003	Cm_2O_3	0.26
				Subtotal	7.4
				Total	47.0

a. The reference HLLW is representative of a large state-of-the art commercial reprocessing plant such as BNFP.
b. Potential soluble poisons which may be used during fuel dissolution.
c. Depends upon burnup of the fuel being reprocessed, should not vary over a factor of two from the reference waste composition (burnup=25,000 MWd/MTU).

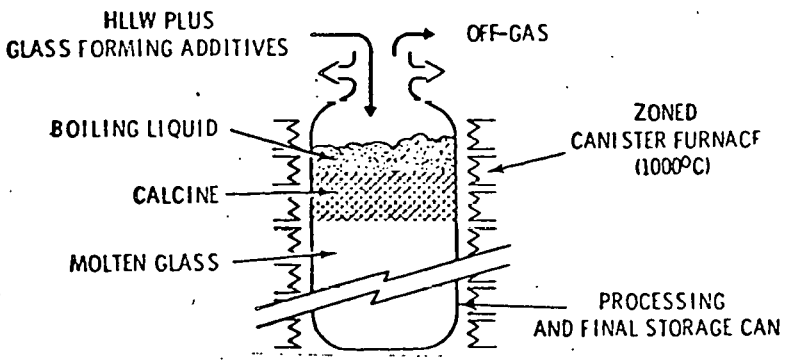

FIGURE 2. BRITISH RISING LEVEL GLASS PROCESS (FINGAL/HARVEST) (1)

withstand glass-melting temperatures of 1050 - 1150 C for anything but very brief periods of time is quite unrealistic. If supported from the top during melting the canister will stretch and perhaps rupture; if supported from the bottom it will buckle unless well supported vertically. As shown in Figure 3, under so low a stress as 1 Ksi 304 L will experience 2 percent creep deformation in less than 7 hours at 1100 C[4].

The plan to hold at 700 C after melting to avoid devitrification of the glass and to stabilize the temperature of the canister is especially unfortunate for the canister material. As shown in the middle of the curve of Figure 4, it takes only 5 minutes at 700 C to sensitize a 0.027 percent C stainless steel thus making it susceptible to intergranular corrosion[5]. This carbon content is comfortably within the AISI specification for the carbon content of 304 L stainless steel. Sensitization is brought about by intergranular chromium carbide precipitation.

The plan to hold the canister at 900 C and gas quench to 400 C is much better from the viewpoint of the metal. It is reasonable to anticipate the possibility that the metal can be cooled fast enough to avoid sensitization. The question should be investigated experimentally.

As can be seen from Figure 4, seal welding the lid on the canister after filling will not sensitize the steel if the metal cools below 750 C in less than 5 minutes. Such is well within the realm of possibility, especially if the canister is sealed while immersed in water. On the other hand, heating the entire canister (and, necessarily, its contents) to 1000 C for stress-relieving purposes after seal welding the lid, as is the plan, will desensitize the steel on heating and holding at 1000 C. However, subsequent cooling from the stress-relieving temperature will invite sensitization of the steel and will not result in stress relief. It is unlikely that such a mass of metal and glass can be cooled below 750 C in less than 5 minutes and below 600 C in less than 1 hour, which Figure 4 shows is necessary to avoid sensitization. Moreover, fast cooling will shatter the glass. At the same time, because of the difference in expansion coefficients

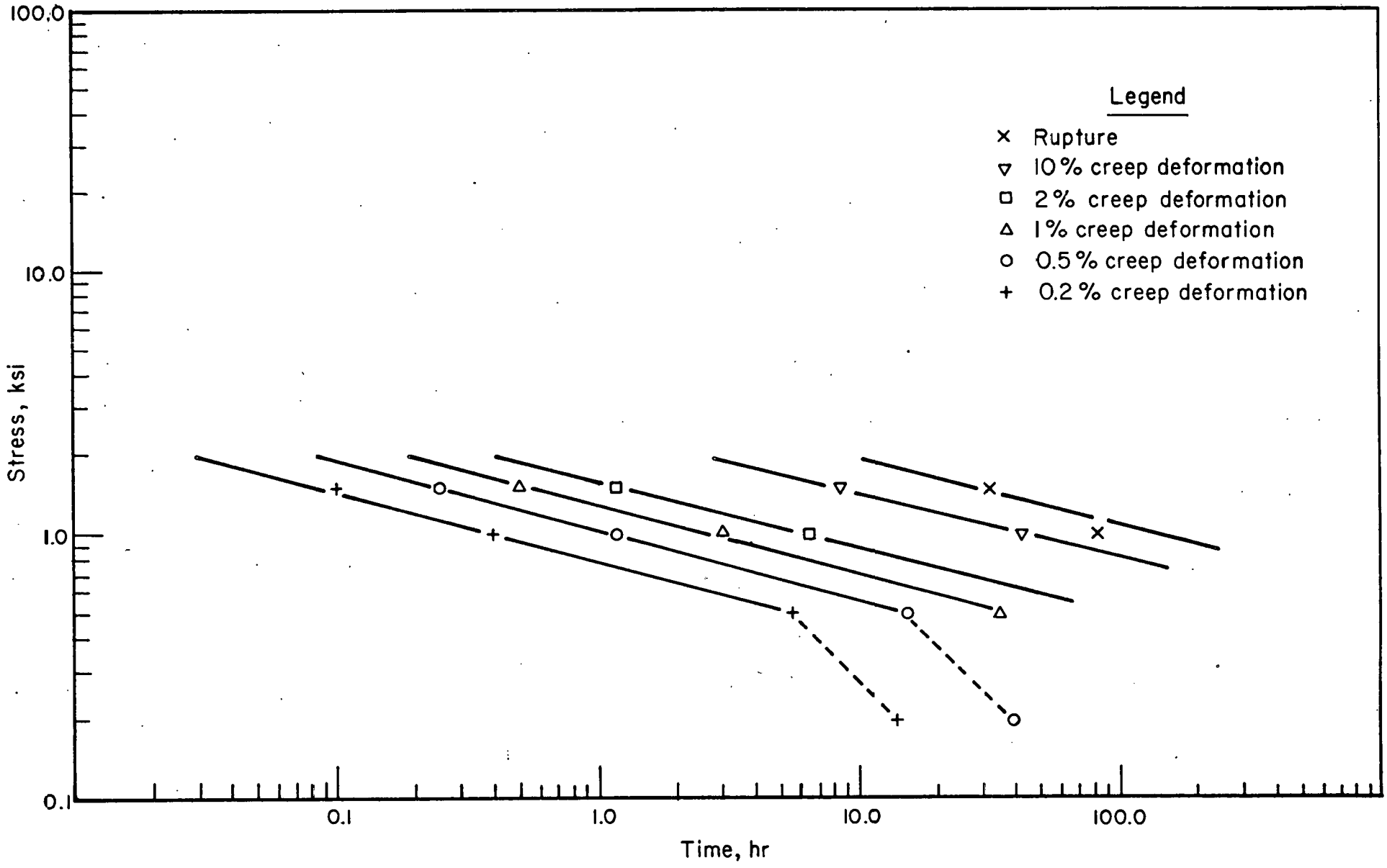

FIGURE 3. CREEP AND RUPTURE DATA FOR 304 L STAINLESS STEEL PLATE TESTED AT 1100 C[4]

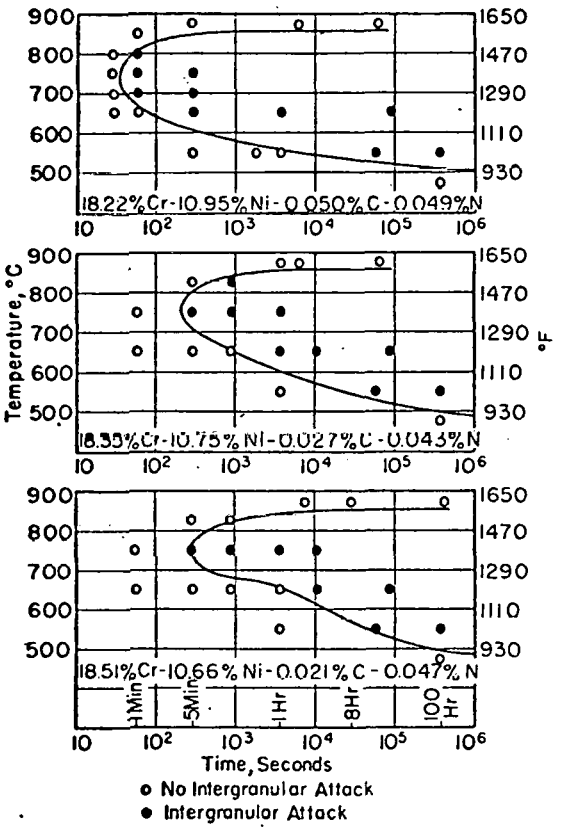

FIGURE 4. TIME-TEMPERATURE-PRECIPITATION CURVES SHOWING THE EFFECT OF CHANGING CARBON CONTENT IN AUSTENITIC 18% CHROMIUM STEELS CONTAINING 10.5 TO 11.0% NICKEL

Tests made in boiling acidified copper sulphate solution[5].

between the glass and the metal, on cooling to room temperature the entire canister will wind up in a state of tension, the very worst stress condition for intergranular stress-corrosion cracking.

However, it should be stated that there are ways to achieve some measure of stress relief. One is to cool well below ambient temperature after heating at 1000 C, on the supposition that subsequent warming up to room temperature will compensate sufficiently for the difference in expansion coefficients between metal and glass. Another way is to shot peen the canister after filling and seal welding the lid. This process tends to build compressive stresses in the surface which might neutralize the aforementioned tensile stresses.

Impact on the Canister - Environmental Factors. During in-can melting corrosion can be expected on both the interior and exterior surfaces of the canister. The attack by the glass on the internal surfaces during in-can melting has been found to be insignificant from the standpoint of its impact on canister reliability[6].

Oxidation of the outside surface during the melting process amounts to only a few mils which in itself is not considered to be serious from the standpoint of canister wall strength. On the other hand, the presence of such oxide films can be expected to increase susceptibility to stress-corrosion cracking during water storage. Studies in boiling water reactor environments have shown that stainless steels having oxide films formed during fabrication are more susceptible to stress-corrosion cracking than those having oxide-free surfaces[7]. From the corrosion standpoint it will be necessary to remove oxide films formed on the outer canister surface during in-can melting.

Several techniques have been considered for the removal of these films, namely, (a) grit or sandblasting, and (b) electropolishing. High pressure steam and water sprays often used for decontamination are ineffective in removing the oxide film. Both of the above techniques are effective; however, there are drawbacks to both of them. Sandblasting may result in the formation of small

crevices on the surface which could promote localized corrosion during water storage. Electropolishing on the other hand, if not carefully controlled, could result in preferential weld dissolution or shallow intergranular attack of sensitized material which could act as focal points for crack initiation, particularly in view of the fact that the canister surface is under tension at levels of the order of the yield strength of the steel.

As previously pointed out, the most damaging factor from the corrosion standpoint is the fact that after in-can melting the Type 304 L stainless steel will be sensitized unless the necessary cooling rates are achieved to prevent it. Sensitized stainless steels readily crack at ambient temperature in marine environments[8]. It is also probable that cracking can occur in relatively pure water, especially if, during storage, localized boiling occurs on the canister surface.

Continuous Ceramic Melter to Produce a Glass-Type Waste Form

Process Description. Glass frit is slurried with the high level liquid waste and either fed directly to the ceramic-lined melter or to a preconcentrating or calcining unit. These options are shown in Figure 5. When the slurry is fed directly to the melter, water, nitric acid, and nitrous oxides are carried away through the off-gas system. The waste oxide residue and frit are fused into a homogeneous glass at temperatures of 1100 - 1200 C. The glass is then drained into a storage canister through an overflow drain.

Energy for drying, calcining, and melting is provided by passing an alternating current through the glass between electrodes positioned at each end of the melter as shown in Figure 5. Heating occurs by the joule or ionic principle. The alternating voltage between the electrodes forces mobile ions (principally sodium) to migrate through the molten glass. Resistance to this migration causes the dissipation of energy known as joule heating. In recent years, joule-heated, ceramic-lined melters have gained increasing acceptance for use in the glass industry worldwide.

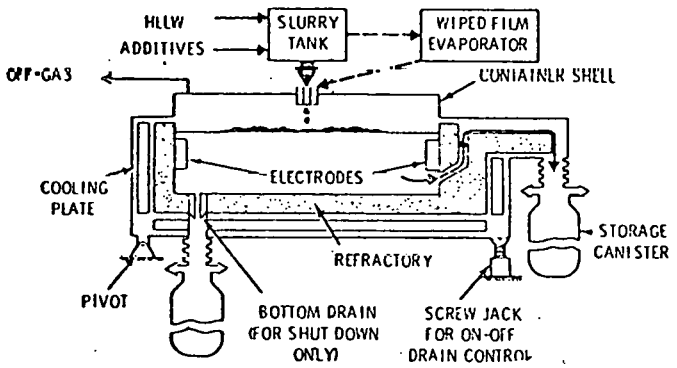

FIGURE 5. CONTINUOUS CERAMIC MELTER[1]

For a joule-heated ceramic-lined melter to operate, the glass must be heated hot enough to be conductive. Therefore, some means other than joule heating must be used for startup. One method employs the sacrificial-element technique which uses a set of temporary electrodes placed in front of the main electrodes with a resistance-heating element fitted between them. For initial startup the heating element is buried in glass frit; for restart the heating element is laid on top of the frozen glass. When the glass melts it consumes the sacrificial element.

In the process of draining the molten glass into the canister it has been determined that the canister must be preheated in order for the glass to flow properly and fill the canister completely[9]. The preheating temperature currently being considered is 650 C.

The continuous ceramic melter system is not limited to filling canisters. It could be used to produce glass shapes, such as marbles. Again, the high temperatures attainable in the melter permit a high silica content in the glass which improves the durability of the glass.

Impact on the Canister - Metallurgical Factors. From the standpoint of high-temperature strength considerations, preheating a 304 L stainless steel canister to 650 C before filling with molten glass is entirely feasible. Certainly it is far more reasonable than heating to 1050 - 1150 C as is required in the in-can melting process. However, as shown in Figure 4, after about 15 - 16 minutes at temperature the metal will become sensitized. Furthermore, metal temperature can be expected to rise substantially when the molten glass at 1050 - 1150 C is poured into the canister. The higher the temperature reached by the metal, the weaker it will become and the faster it must be cooled to avoid sensitization. As stated earlier, the metal must cool below 750 C in less than 5 minutes and below 600 C in less than 1 hour.

Regarding seal welding of the lid after filling the canister and post-weld stress relieving, the comments made in the section on the in-can zone melting process apply also to the continuous-ceramic melter concept.

Impact on the Canister - Environmental Factors. In general the comments made in the section on in-can melting apply to the continuous ceramic-melter concept. One advantage of this type of canister filling is that the temperatures to which the metal will be heated are much less severe. However, depending on the time the canister is held in the 600 to 750 C temperature range, sensitization could be more severe than for the in-can melting sequence. The degree of sensitization is time-temperature dependent. With very long heating times in the critical temperature range some recovery in resistance to intergranular corrosion occurs. This is the result of chromium diffusing from within the grains to the grain boundaries which had become impoverished in chromium during sensitization, and of the agglomeration of the chromium carbides formed during sensitization so that continuous networks of carbides no longer exist. These changes that occur on very long-time holding in the critical temperature range can be expected to improve resistance to intergranular stress-corrosion cracking.

Fluid-Bed Calcination Plus Stabilization to Produce a Calcine-Type Waste Form

Process Description. In this process, illustrated in Figure 6, the wastes in the form of liquids or slurries are atomized in a fluid bed operating at a bed temperature of 500 - 600 C. The evaporation that occurs results in a product comprising granular bed material and powdered calcine, both of which are removed from the calciner. The product can be stabilized by heating at 900 C and stored in canisters, or it can be converted to other waste forms.

In the operation of the process, the feed is transferred by air or steam jet to the feed preparation facility in the calcining system where chemical additives are mixed with it. Thereupon, it is fed to the calciner by a combination airlift and gravity system. Here the feed is atomized by air through spray nozzles located in the walls of the calciner. Subsequent stabilization of the product is carried out in the storage canister itself.

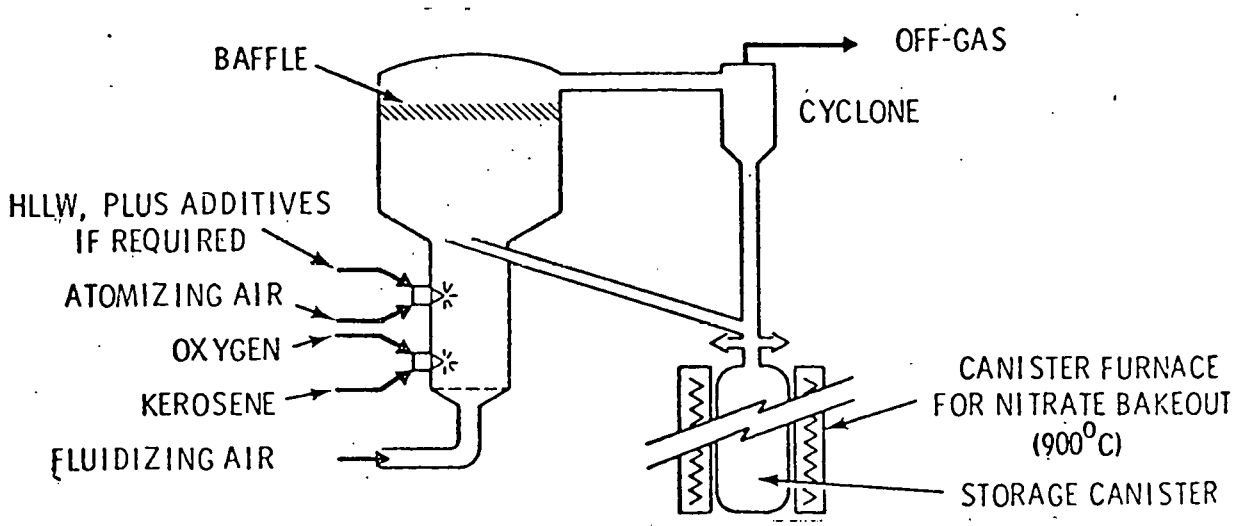

FIGURE 6. FLUID-BED CALCINATION PLUS STABILIZATION[1]

The resulting product may be characterized as having a size range of 0.05 - 0.5 mm with a density as calcined of 2.0 - 2.4 g/cc, a specific volume of 40 ℓ/MTU, and a thermal conductivity of 0.2 - 0.3 $Wm^{-1}{}^{\circ}C^{-1}$. Hg and I are not retained in the calcined solids; fluoride and chloride can be retained if appropriate additions are made to the feed.

Impact on the Canisters - Metallurgical Factors. Because the process concept envisions stabilizing the calcine in the canister, necessarily the canister will be heated for some period of time at the stabilizing temperature of 900 C. From the point of view of sensitizing the steel to intergranular corrosion this temperature is safe, as shown in Figure 4. However, should the temperature happen to fall 50 C, the steel would become sensitized in a short time, probably less than 1 hour. In other words, the stabilizing temperature of 900 C is uncomfortably close to the borderline, i.e., the top of the C-curve depicted in Figure 4.

In other respects, the comments made in the section on in-can melting also apply to the fluid-bed plus stabilization concept.

Impact on the Canisters - Environmental Factors. As in the previously discussed types of waste processing systems, cooling from the in-can nitrate bake-out temperature of 900 C will result in carbide precipitation at grain boundaries unless appropriate cooling rates are achieved, a condition which promotes stress-corrosion cracking of stainless steels. In addition, the nitrate bake-out may result in some attack of the interior surface of the can. Depending on the time at temperature, nitriding and/or intergranular oxidation may occur. However, the depth of such attack is not expected to be more than 10 or 12 mils. This amount will not significantly affect canister strength and integrity.

Continuous Melting Plus Devitrification to Produce a Glass-Ceramic-Type Waste Form

Process Description. Glass ceramics are new substances and their application to nuclear waste management is only in the early laboratory stages. As currently visualized, the process of incorporating high-level liquid wastes into such substances consists of calcining the high-level liquid waste, melting it with glass frit, and casting the resulting glass into plates or disks. As cast, the disks or blocks must be completely vitreous. This means that they must be so sized (3 cm or less in thickness) that temperature gradients are small and cooling is very fast.

After cooling, the disks are subjected to controlled nucleation and crystal growth in a tunnel kiln. The blocks are stacked in canisters and the annulus is filled with metal to enhance heat transfer. The process is shown schematically in Figure 7. The kiln operates between about 500 and 800 C. At the lower temperature crystals are nucleated throughout the blocks, then as temperature is increased the crystals grow until the mass is no longer a glass but is a very fine-grained crystalline material. Some glass phase may remain uncrystallized.

The composition of the glass-ceramic product will vary with the waste, but an illustrative composition contains 38.9 percent SiO_2, 3.9 percent TiO_2, 4.6 percent Al_2O_3, 3.9 percent B_2O_3, 3.9 percent MgO, 9.8 percent Li_2O_3, 3.9 percent K_2O, 20 percent waste oxides, and 11.1 percent Gd_2O_3. Other data are a density of 2.85 g/cc, a specific volume of 77 ℓ/MTU, a thermal conductivity of 2.2 $Wm^{-1}{}^{\circ}C^{-1}$ at 400 C, and a leachability similar to that of the parent glass. It should be noted that the material cannot be stored above its crystallization temperature, i.e., 700 - 800 C.

Impact on the Canister - Metallurgical Factors. Because the canister will be loaded at room temperature, the loading process will cause no metallurgical changes in the canister. However, should the

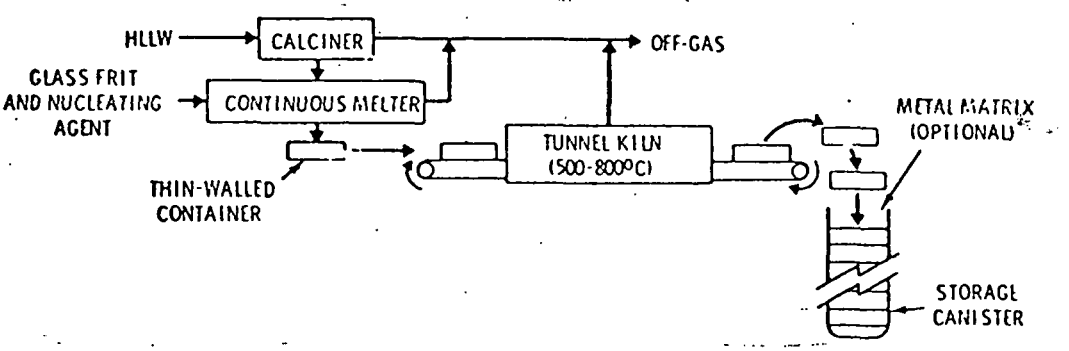

FIGURE 7. PROCESS FOR PRODUCING A GLASS-CERAMIC-TYPE WASTE FORM[1]

decision be made that, for purposes of heat transfer, molten metal should be poured into the loaded canister to provide a conductive matrix, then the canister could become sensitized depending on the temperature reached and the time at temperature in accordance with the middle curve in Figure 4.

Otherwise, the only matters of metallurgical concern are seal welding the lid and post-weld stress relieving. Regarding these two items, the comments made in the section on in-can zone melting are applicable here.

Impact on the Canister - Environmental Factors. Of the processes under consideration, the glass-ceramic type in which the waste is stored as thin wafers has the least impact on canister life from the corrosion standpoint. Since the can is not heated during filling the material will remain in the solution-annealed condition which affords maximum corrosion properties. In the unsensitized condition the Type 304 L canister could be stored in chloride-contaminated water at, say, 70 C without danger of stress-corrosion cracking. Such would not be possible if the material were in the sensitized condition.

The one potentially damaging factor is that, because of heat transfer considerations, it may be necessary to encapsulate the loaded wafers in a metal matrix. Depending on the temperature and the metal or alloy system used to provide the matrix some corrosion and/or even liquid metal embrittlement could occur. In addition, during storage should the metal matrix become molten there is further chance for damage. Even with liquid metal systems compatible with Type 304 L there exists the possibility of slow wastage by the mass transfer phenomenon.

Interim Storage in Water

Process Description. Concerning interim storage of solidified high-level waste at the fuels reprocessing plant, there are two general concepts, storage in water and storage in air. Each of these general

concepts has some variants. This section treats processes for interim storage in water, while the section that follows takes up major schemes for interim storage in air.

In the Water Basin Concept (WBC), bare canisters are stored on support racks under water in a basin of demineralized water, as shown in Figure 8. The basin is concrete lined with stainless steel. The water in the basin removes heat from the canisters, provides a transparent radiation shield, and acts as a confinement barrier in the event of a canister leak.

The basin water is cooled by pumping it through a water-to-water heat exchanger. The secondary water, in turn, is cooled by a forced-draft cooling tower, the heat being dissipated to the atmosphere.

The storage area is housed in a building, metal and concrete cover blocks being provided for each basin. Supply air is filtered to minimize dust and build-up of algae in the water systems. The chloride content of the basin water is less than 10 ppm.

A variant of this storage system is the Water Basin Concept with Overpack (WBC-OP) which is similar to the WBC described above except that the canister is encased in a 12.5 mm thick stainless steel overpack. The overpack provides an additional confinement barrier which eliminates the need for concrete cover blocks on the basins as well as for a two-loop water-cooling system.

Temperatures for the WBC and WBC-OP are listed in Table 2. In the event of instantaneous loss of water from the storage basin, due to a catastrophe, temperatures would rise rapidly to high values as illustrated in Figure 9.

Impact on the Canister - Metallurgical Factors. So long as operations are normal, storage in water will have no metallurgical effect on the canister material. Even should the cooling system malfunction the canister will be unaffected metallurgically so long as metal temperature remains fairly low.

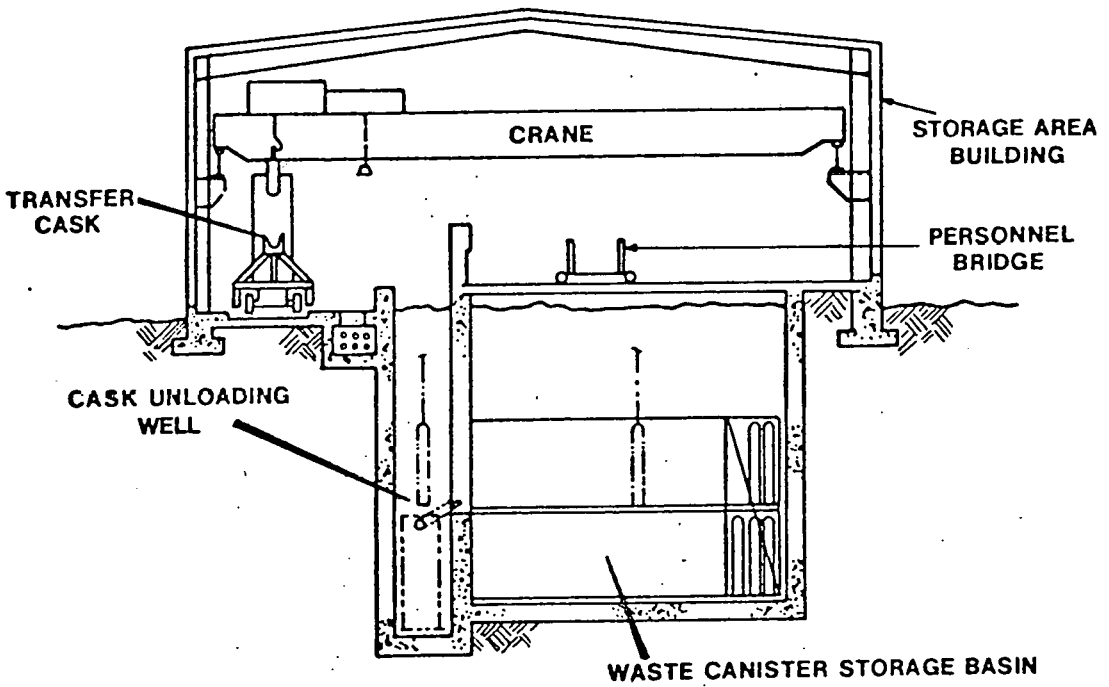

FIGURE 8. THE WATER BASIN CONCEPT (WBC) FOR INTERIM STORAGE OF SOLIDIFIED HIGH LEVEL WASTE[1]

TABLE 2. WATER BASIN AND WATER BASIN OVERPACK STORAGE ARRAY TEMPERATURES, C[1]

Canister Storage Condition	Bare	Overpack
Basin Water	49	49
Overpack Surface		
Outer	-	52
Inner	-	53
Canister Surface		
Outer	53	251
Inner	54	252
Waste Centerline		
Without Fins	443	643
With Fins	-	538
Fin Number	0	3
Fin Thickness (inches)	-	0.25

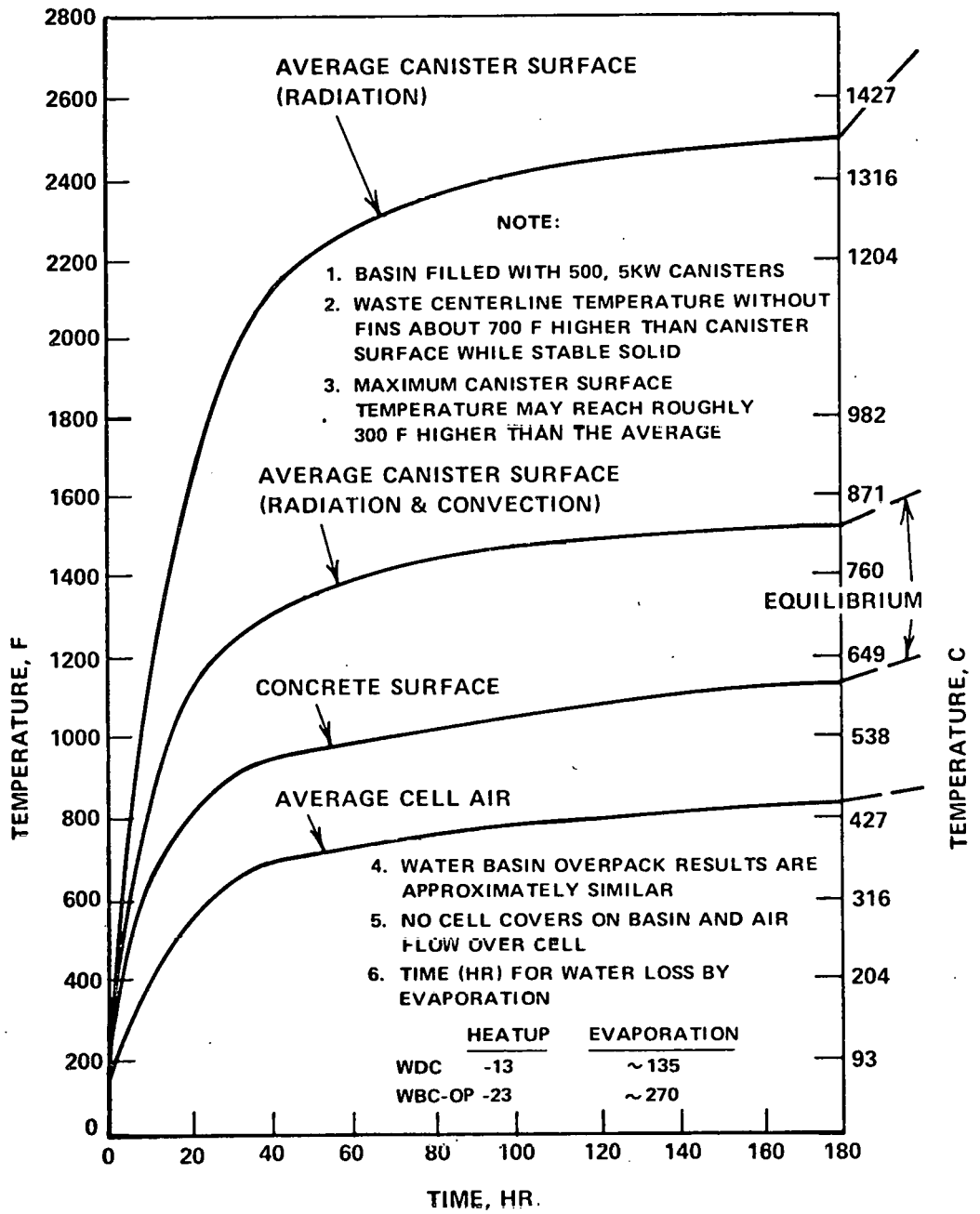

FIGURE 9. PROJECTED TEMPERATURE RESPONSE AFTER INSTANTANEOUS WATER LOSS IN WATER BASIN CONCEPT[1]

However, the canister will be in a state of tension even though an effort may have been made to stress relieve it after seal welding, as discussed earlier in the report. As mentioned before, tensile stress invites stress-corrosion cracking. The exception to this situation is the alternative in which devitrified glass is loaded at room temperature into the canister and either a metal powder or a low-melting metal or alloy is used as a heat-conducting matrix. In this case, assuming the canister is supported from the bottom, it will tend to be in compression. In all other cases, not only may the canister be in tension but also it may be sensitized as discussed earlier. Thus, even under normal operating conditions in the interim water storage system the canister may be susceptible to stress-corrosion cracking.

In the event of instantaneous loss of water from the storage basin as depicted in Figure 9, canister temperature would rise to high levels. As shown in Figure 4, between 500 and 850 C the steel would become sensitized depending on the heating rate or holding time at temperature; at and above about 875 C solution-annealing would occur which would desensitize the metal but the steel would lose strength rapidly as temperature continued to increase; above the melting temperature of the glass the canister would be expected to buckle for lack of support by the glass and because of loss of strength by the metal; at still higher temperatures the canister would rapidly lose its shape and as temperature approached 1400 C the canister would start to melt.

On cooling subsequent to the catastrophic event, several different things could happen to the canister depending on the maximum temperature reached, the time held at temperature, and the cooling rate. Canisters heated so hot as to be badly buckled or misshapen, even though they may remain intact, obviously would require replacement. Canisters heated at lower temperatures but above 875 C would become sensitized on cooling through the temperature range of 850 C to 500 C unless they cool below 750 C in less than about 5 minutes (see Figure 4). Those canisters which became sensitized on heating

in the range of 500 to 850 C will remain sensitized on cooling; likewise, those canisters which did not become sensitized on heating into this range would remain unsensitized provided the cooling rate were fast enough, e.g., cooling below 750 C in less than 5 minutes and cooling below 600 C in less than 1 hour. Sigma, epsilon, and other phases might form in those canisters heated for long periods of time in the range of 650 to 875 C. These phases have a tendency to promote brittleness in the metal. In all cases, the metal would be in tension when cooled because of the difference in expansion coefficient between the metal and the glass.

Impact on the Canister - Environmental Factors. The possibility of corrosion from the outside is much greater than from the inside during water storage. This is true even if the canister should leak and allow water to contact the encapsulated waste.

Austenitic stainless steels of the 304 L type exhibit very low corrosion rates in contact with distilled water at room temperature. In fact, they are the preferred material for storage since insignificant metal ion contamination occurs with stainless steel containers. As long as the stainless steel surface is kept free of deposits no attack will occur even after years of exposure. However, in the present situation premature canister failure as a result of a corrosion mechanism can be expected to occur during water storage even if water quality is maintained.

Of most concern is the susceptibility of the Type 304 L stainless steel to chloride stress-corrosion cracking. In this respect the chloride content and the temperature of the water are of prime importance. Stress-corrosion cracking of austenitic stainless steels has occurred in aqueous environments containing as little as 1 ppm chloride where there existed a mechanism for concentrating the chlorides on the metal surface such as localized boiling. Such a condition could occur with loss of system cooling capability. Another concentration mechanism is through an ion exchange phenomenon

where oxide corrosion products tend to concentrate chlorides in localized areas. Stainless steel stress-corrosion cracking failures have been investigated at Battelle where the metal did not contact water having more than 1 or 2 ppm of chloride. Nonetheless, analytical data revealed that chloride levels on the surface near the crack initiation point were in excess of 2,000 ppm. If there is no mechanism for the concentration of the chlorides then experience suggests that in neutral solutions as much as 10 ppm of chlorides probably could be tolerated at temperatures up to about 70 C. It is to be emphasized that the above discussion applies only in the case of solution-annealed materials.

Austenitic stainless steels which are in the sensitized condition exhibit stress corrosion cracking failures at room temperature in water containing less than 5 ppm chlorides according to laboratory experience at Battelle's Columbus laboratories. Thus, the present plans to control the chloride level in the storage tank to about 10 ppm will not ensure that stress-corrosion cracking even of solution-annealed materials will not occur during interim storage.

Another important environmental parameter is temperature. Solution-annealed stainless steel heat exchangers are free of cracking in seawater service at temperatures of 70 C even though the tubes have been rolled into the tube sheet. However, as the temperature increases the incidence of cracking failures increases rapidly. For example, Scharfstein and Brindley cracked stainless steels in 75 C water containing 10 ppm of chlorides[10].

The magnitude of stress also is an important factor in stress-corrosion cracking. The higher the stress level the greater the extent of cracking to be expected. However, Staehle, et al, have found stress-corrosion cracking in stainless steel at stress levels as low as 2,000 psi in 210 C water containing 50 ppm chloride[11]. For those waste fixation processes utilizing in-can melting the canister will be in tension with the residual stress in the order of the yield strength of the material, a condition conducive of extensive stress-corrosion cracking.

While the major corrosion mechanism for storage is stress-corrosion cracking there are several other corrosion processes which could result in failure of the canister. These mechanisms are of particular concern in the case where the original canister might be overpacked with a stress-relieved solution-annealed Type 304L canister. The secondary mechanism of corrosion is that occurring in crevices and under deposits on the stainless steel surface. In such cases the area outside the crevice or deposit in contact with the oxygenated water becomes the cathode whereas the oxygen-starved area under the deposit becomes the anode. Because of the large cathode-to-anode area relationship, attack under the deposit can be rapid. Corrosion rates could be sufficient to penetrate the canister wall within a year. To prevent such attack care must be exercised to seal joints, minimize undercutting in welds and prevent the formation of deposits on the surface of the canister.

Even though water cleanliness is maintained, slime and bacteria deposits could form which would also lead to differential aeration cells on the metal surface. In addition, certain species of bacteria such as ion fixing and sulfate reducing give off metabolic products which destroy the passivity of stainless steel. While experience with swimming-pool reactors and nuclear-waste water-storage basins does not suggest any significant slime and bacteria problem, nonetheless the possibility of such conditions cannot be completely ignored since radiation dosage may not be sufficient to ensure completely sterile conditions.

From a consideration of all the data it can be concluded that environmental conditions existing in the interim water storage are conducive to the initiation and propagation of stress-corrosion cracks in Type 304 L stainless steel canisters. There exists a high probability that a very significant number of canisters will fail by corrosion within the projected storage time.

Interim Storage in Air

Process Description. In the realm of interim storage in air there are two principal concepts, the Sealed Storage Cask Concept (SSCC) and the Air-Cooled Vault Concept (ACVC)[1]. Both have variants. Perhaps the most important are two variations of the former concept known as the Sealed Storage Cask Concept - Medium Wall (SSCC-MW) and the Sealed Storage Cask Concept - Thick Wall (SSCC-TW). All these concepts are described in the paragraphs that follow.

In the SSCC, the canister is placed in a carbon-steel storage cask which, in turn, is encased in a concrete shield to form the storage unit. The unit is transported to the storage area where it is put on a concrete pad resting on the ground. The concept is illustrated in Figure 10. As shown in the drawing, the unit is positioned vertically on the pad and is air cooled by natural convection.

For a canister 610 mm OD x 4.5 M long, the carbon-steel cask is 760 mm OD x 660 mm ID x 4.7 m long, while the concrete gamma neutron shield is 3 m OD x 1.1 m ID x 6.3 m long with a cap 840 mm thick. The unit including the pad weighs 118 tonnes. Estimated temperatures are reported as 32 C for the concrete OD, 110 C for the concrete ID, and 171 C for the cask[1].

The variant of the SSCC, known as the Sealed Storage Cask Concept - Medium Wall (SSCC-MW), calls for increasing the thickness of the cask from 51 mm to 203 mm and eliminating the concrete gamma neutron shield. As shown in Figure 11, the units are stored above ground horizontally on concrete cradles. Estimated temperatures are 82 C for the cask OD and 235 C for the canister O.D.

In the thick-walled variation of the SSCC, the thickness of the cask is increased to about 355 mm. A concrete neutron shield is provided, and the unit is stored vertically on a pad much the same as for the SSCC (see Figure 12). Assuming an inlet air temperature of 27 C, estimated temperatures for the components of the SSCC-TW unit are 32 C for the concrete OD, 44 C for the concrete ID, 82 C for the cask OD, 88 C for the cask ID, and 220 C for the canister.[1]

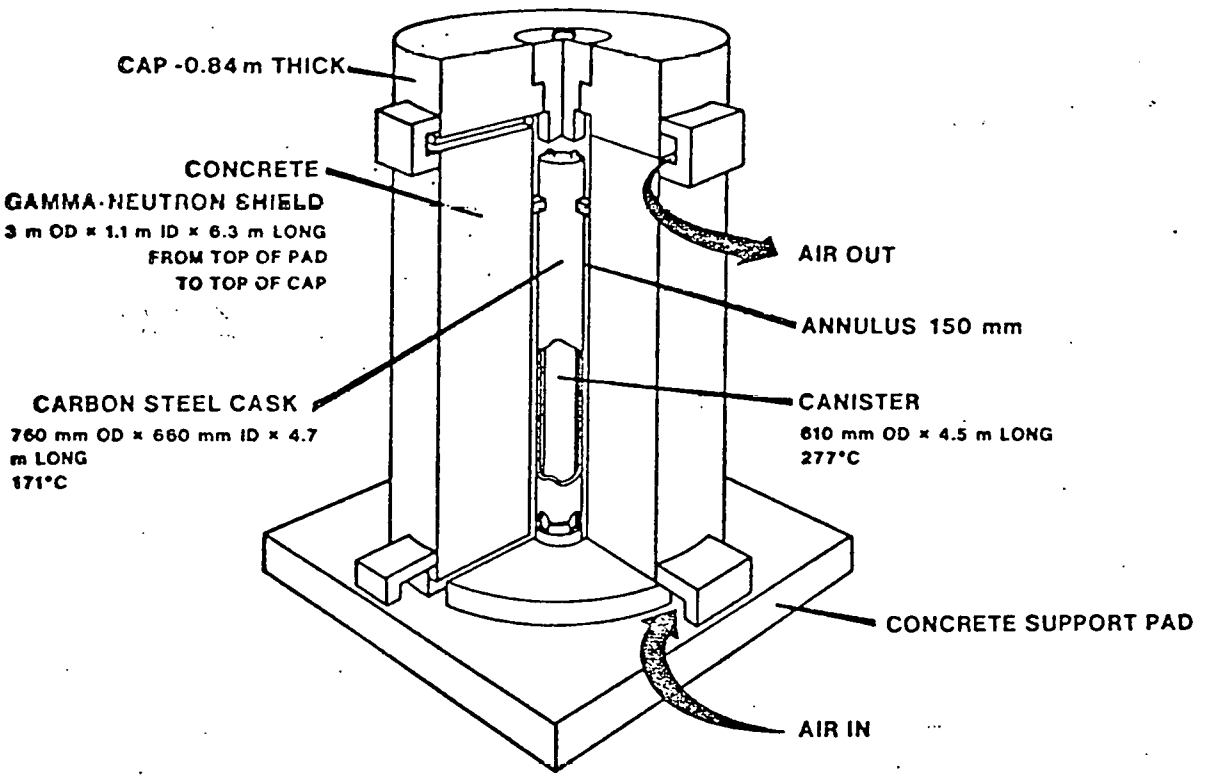

FIGURE 10. SEALED STORAGE CASK CONCEPT (SSCC) FOR INTERIM STORAGE OF SOLIDIFIED HIGH-LEVEL WASTE[1]

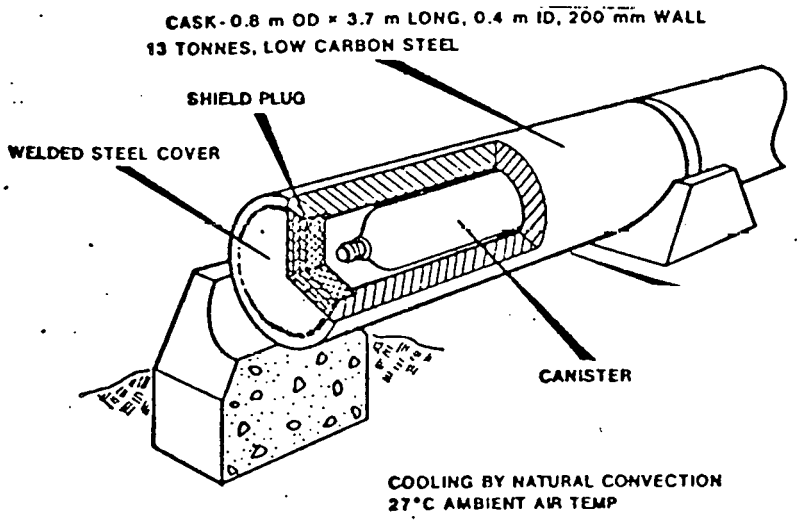

FIGURE 11. SEALED STORAGE CASK CONCEPT - MEDIUM WALL (SSCC-MW) (1)

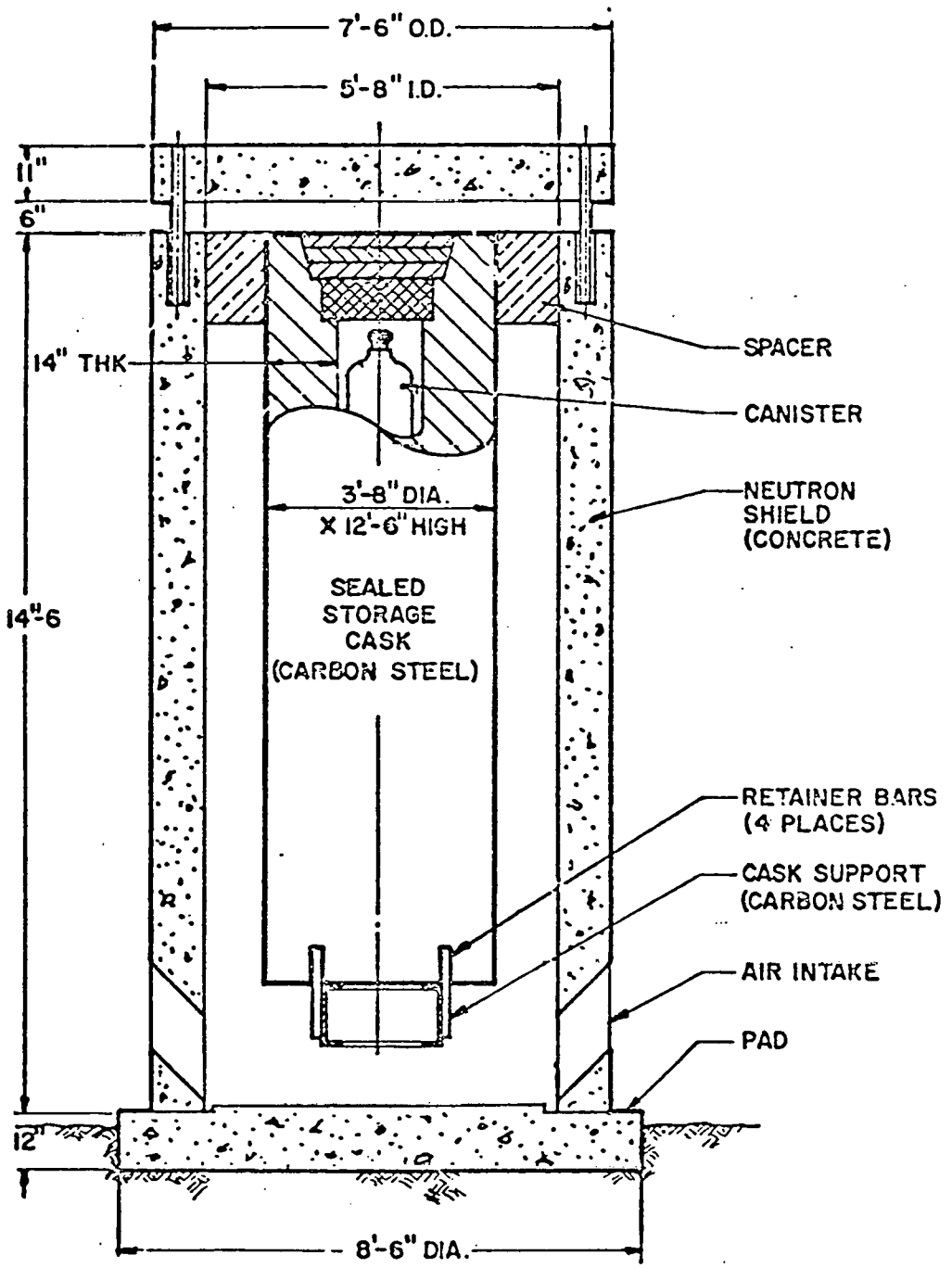

FIGURE 12. SEALED STORAGE CASK CONCEPT - THICK WALL STORAGE UNIT ON CONCRETE PAD (1)

The Air-Cooled Vault Concept (ACVC) is substantially different from the other concepts using air cooling which have just been described. In this concept the waste-containing canister is encapsulated in a 12.5 mm thick carbon-steel overpack with a cast-iron shield plug installed in the top of the overpack about 1 m above the top of the canister, as shown in Figure 13.

The storage area is a concrete vault situated partly below grade level as illustrated in Figure 14. It is cooled by natural convection of air. The storage units are suspended from the roofs of the cells in the vault in the manner shown in Figure 13. The estimated surface temperature of the overpack is 204 C, while that of the canister is 327 C.

Impact on the Canister - Metallurgical Factors. So long as operations are normal, storage in air in accordance with any of the concepts just described will have no metallurgical effect on the canister material. Should air circulation be cut off, canister temperature would rise and the canister would be affected metallurgically in a manner analogous to that described in the preceding section on Interim Storage in Water.

As to the carbon-steel overpack, storage in air according to any of the concepts just discussed will cause no metallurgical damage so long as operations are normal. This applies even to the SSCC-MW concept which envisions storing the canister on concrete cradles as a simple beam as well as to the ACVC concept which involves suspending the overpack/canister assembly during storage. However, in the first instance the bottom portion of the overpack will be in tension which may invite stress-corrosion cracking under certain conditions as described below. In the second case, the entire overpack below the point of suspension will be in tension.

Should temperature rise to abnormal levels, for any reason, then metallurgical changes in the carbon-steel overpack may occur depending on the temperature reached and the time at temperature. As temperature rises the steel tends to lose mechanical strength; at temperatures of about 425 - 450 C and above the steel begins to deform by

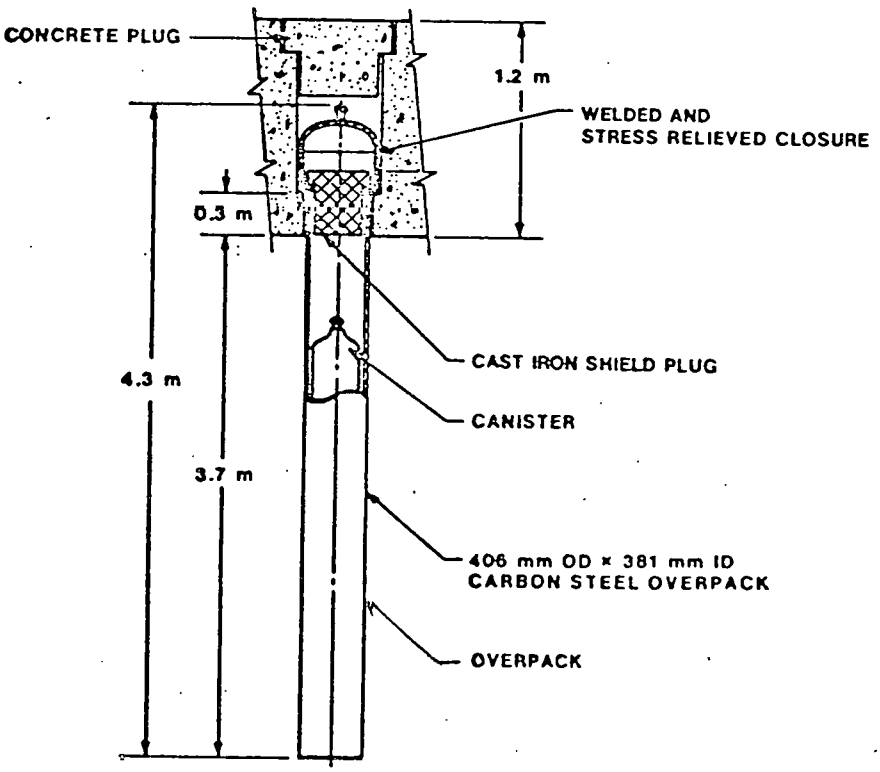

FIGURE 13. OVERPACK AND CANISTER ASSEMBLY FOR USE IN THE AIR-COOLED VAULT CONCEPT (ACVC)[1]

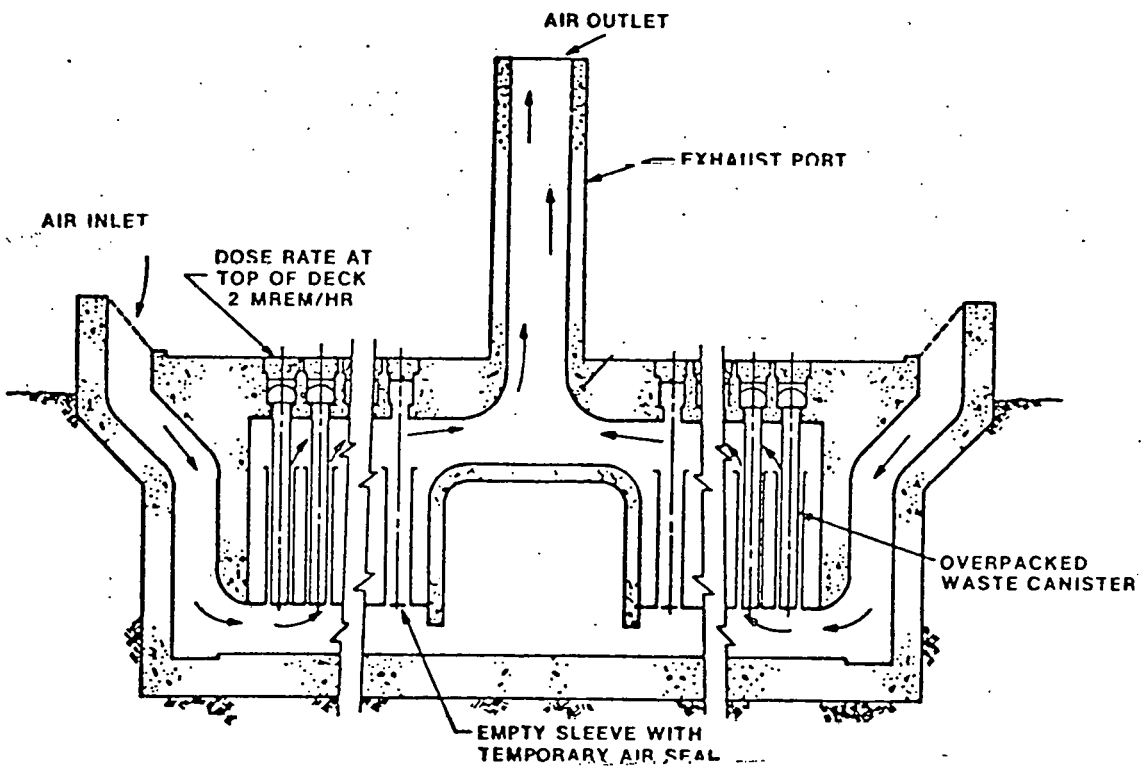

FIGURE 14. AIR-COOLED VAULT CONCEPT (ACVC) FOR INTERIM STORAGE OF SOLIDIFIED HIGH-LEVEL WASTE [1]

the creep mechanism, which is a temperature/time-dependent phenomenon. Thus, overpacks supported at the bottom in an upright position will buckle, overpacks suspended will stretch, while overpacks supported as beams will bend or sag. During storage both canister and overpack will be subject to irradiation from the contained waste. Taking a radiation level of 10^6 n/cm^2/sec[12] and the figure of 10^{18} n/cm^2 [13] as the total neutron dosage that carbon steel can sustain without adverse effects, then the carbon steel overpack will not become embrittled within a time period of almost 10^6 years. The 304 L stainless steel canister will be far less prone to embrittlement.

Impact on the Canister - Environmental Factors. In the air-storage concepts the primary factor which will influence the life of the overpack is the atmospheric corrosion rate of carbon steel. This is a function of the composition of the steel and the corrosivity of the atmosphere. Since only plain-carbon steels are being considered, beneficial effects of small additions of Cu, Ni, Cr, and P on the corrosion rate of steel are not being considered. Only environmental factors are being considered in assessing overpack performance.

The rusting rate of the bare steel will be controlled by the climatic conditions existing at the site. The main factors which affect the corrosivity of the atmosphere are the type and level of pollution and the amount of moisture present. The latter plays a vital role. For example, below about 60 percent relative humidity the rate of rusting of carbon steels is negligible even if the atmosphere is polluted with SO_2. Thus the location of the air storage site can be important.

In the SSCC the carbon-steel overpack will be encased in a concrete shield which will prevent direct impingement of rain, snow, or dust thus minimizing the chance for contamination of the surface of the carbon-steel overpack. These same conditions will also exist for the ACVC and the SSCC-TW. Thus, under these conditions corrosion will be of the dry-oxidation type rather than aqueous corrosion as would occur during atmospheric exposure where the surface will often

be wet with a film of water. During storage in the SSCC and ACVC concepts the surface temperature of the steel will be approximately 171 C and 204 C, respectively. At these temperatures the oxidation rate of plain-carbon steel will be less than 2 mils/year. In addition, this rate of oxidation will not be significantly affected by normal day-to-day changes in relative humidity unless condensation occurs which seems highly unlikely. The environmental factors involved in these storage concepts are not such as to cause significant damage to the overpack during planned storage life.

The situation is somewhat different, however, for the SSCC-MW. In this concept the concrete gamma neutron shield is eliminated and the bare surfaces of the steel overpack will be exposed to the elements. Surface temperatures of the overpack are expected to be of the order of 82 C. The atmospheric conditions existing at the storage site will directly impact on canister's integrity. If the storage area is located in a desert or where little or no rainfall occurs then there may be little corrosion. On the other hand, if rain or snow contacts the surface frequently the alternating wet and dry conditions could result in excessive attack of the carbon steel. However, even under the worst conditions it is highly unlikely that general and pitting wastage rates would be so excessive as to result in canister failure during the service period.

It seems more likely that the failure mechanism in the open exposure will be one of stress-corrosion cracking resulting from caustic and/or nitrate salts concentrating on the surface during wetting and drying. While extremely rare, there have been instances of failure of highly stressed plain-carbon steel as a result of both sulfide and nitrate stress-corrosion cracking[14]. As ambient temperature rises and the frequency of wetting and drying increases, the chance for stress-corrosion cracking increases. To minimize the occurrence of such failures the carbon-steel overpack should be given a stress-relief heat treatment before being placed in service.

Design will also play an important role in minimizing corrosion in open air storage. Particularly undesirable are crevices and areas where water and salts can collect. The concrete saddles for open exposure are potential problem areas for accelerated corrosion.

Of the air-storage concepts those involving bare-surface exposure of the overpack to the elements are the least desirable from the corrosion standpoint.

Shipping

Description of Wet and Dry Alternatives. In the wet shipment concept the canister is supplied with an overpack. Shielding is provided by water filling the space between the canister and the overpack. This assembly, in turn, is encased in a cask. Heat is removed from the canister to the water in the overpack, then through the overpack to additional water contained in the annulus between the overpack and the cask, then through the cask to air flowing between the cask and an outer jacket. This air is moved by diesel-driven blowers. Shipment is by truck or rail, preferably rail.

In the dry-shipment concept, heat is conducted from the canister through metal and radiated to the atmosphere from an array of external fins. Shielding is supplied by metal (lead, iron, steel) or by water contained in an outer jacket. An example of a dry shipping container is shown in Figure 15.

Impact on the Canister - Metallurgical Factors. So long as the temperature-time profile of the canister during shipping is outside the lower leg of the middle C-curve in Figure 4, the metal will not become sensitized. Preferably, the canister temperature should be well below 500 C. In this way there will be no metallurgical changes during shipment.

Vibration attendant to shipping is not expected to cause cracking or rupture of the parent metal or of the welds in the canister provided the welds are sound and properly contoured. That is, butt

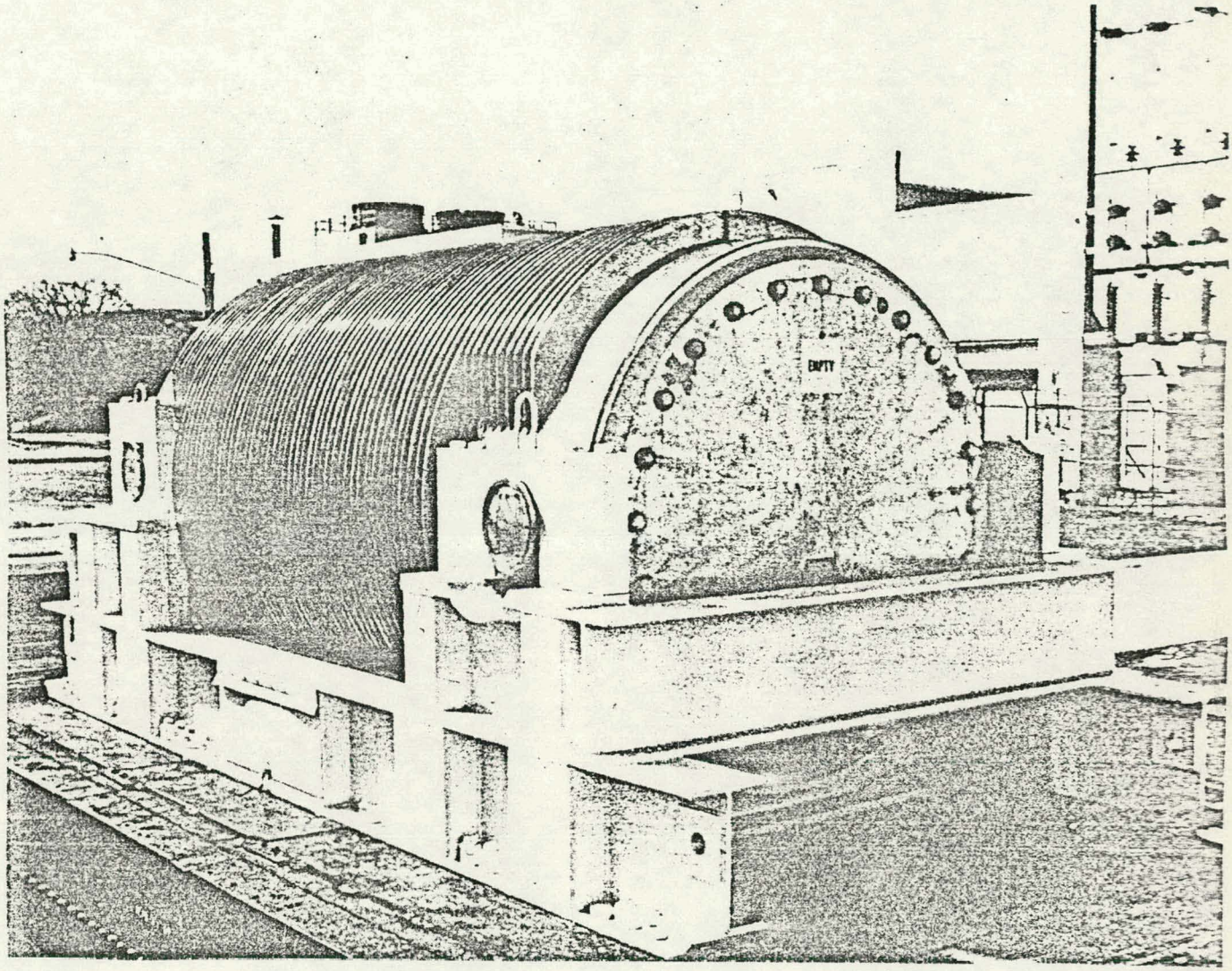

FIGURE 15. A 60-TON SHIPPING CONTAINER USING LEAD SHIELDING (CONSTRUCTED IN 1969) [34]

welds should be ground flush; fillet welds should penetrate completely, be smooth, and show no undercutting. Heavy impacting may deform or rupture the canister, depending on the severity of the impact and the effectiveness of the measures taken to protect the canister.

Should loss of cooling capability occur during shipping, the temperature of the canister would rise and effects analogous to those described in the section on Interim Storage in Water could be produced.

Impact on the Canister - Environmental Factors. The environmental factors operating during wet shipment of the Type 304 L stainless steel canister are analogous to those previously discussed for interim water storage. It is quite likely that wet shipping will initiate stress-corrosion cracks which may penetrate the wall depending on shipping time.

Dry shipping is not expected to result in any significant corrosive attack. Oxidation rates of Type 304 L are very low at the expected shipping temperatures.

Geologic Storage

Description of Concept. The high-level liquid-waste management plan with which this report is concerned envisions isolating the waste from man's environment by storing it in a suitable geologic medium in such a manner that retrievability of the waste canister can be achieved if necessary up to 5 years after emplacement. It is understood that ease of retrievability can vary from ready retrievability, which means the capability to remove the waste-containing canisters intact, to more complicated retrievability by means of mining and excavating methods that may involve removing some of the geologic medium along with the waste. However, ready retrievability is much to be preferred.

At either extreme of the retrievability spectrum, the geologic storage concept must provide a facility comprising one or more subterranean chambers or vaults into which the waste-containing canisters can be moved without being damaged. For ready retrievability, the concept must also provide for access to, and removal of, the canisters without damaging them.

Sites for geologic storage of high-level wastes must meet a number of requirements. Primarily there must be assurance that there will be no radiation exposure to the general public either through direct contact or indirect means involving other portions of man's ecosystem. Thus, because circulating ground water is the most likely means for radionuclides to leave the storage site, the geologic and hydrologic features of the area must be carefully assessed for hydrological stability. In addition, the geological formation must have the required mechanical properties, adequate thermal conductivity, and acceptable chemical and tectonic stability. Also, the zone should be deep enough to avoid surface phenomena such as erosion and biological activity, and have a normal geothermal gradient (i.e., where the temperature increase does not exceed 30 C per Km). Again, the vertical and lateral dimensions of the zone must be large enough to accommodate the facility and allow adequate heat dissipation.

The media that are under consideration for geologic storage comprise salt, basalt, shale, and granite. To date, most attention has been directed at salt.

Salt (halite) is attractive for several reasons. First, it often occurs in deposits that are adequately massive. Also, the material is mechanically strong and has high thermal conductivity. Again, it is plastic and capable of creeping, an attribute that has advantages and disadvantages. Because of this capability, cracks in the deposit heal themselves, rendering the deposit almost crack-free and hence free of circulating ground water. On the other hand, because of the plasticity of salt, tunnels, shafts, and other excavations in the medium tend to close, especially if the temperature is somewhat elevated. According to preliminary information, creep of salt is accelerated at temperatures above 100 C[15].

Very little is known about the effect of gamma radiation on halite. Little damage is expected. However, there is a possibility that chlorine and hydrogen chloride can be formed when halite is irradiated.

A potentially troublesome phenomenon associated with salt deposits is that they contain small pools of water (brine) which tend to migrate along thermal gradients. They are reported to migrate up the thermal gradient by dissolving salt on the warmer side and depositing it on the cooler side[16]. However, it also has been reported that when gas is present in the water the pool migrates down the thermal gradient.

One concept of a geologic storage facility is depicted in Figure 16. It includes surface facilities for unloading casks, checking them, removing the canisters, inspecting the canisters for shipping damage, canister repair, and canister decontamination. Several shafts are provided for access to the storage level. The canisters are lowered down these shafts to the storage level, transported to a prepared cavity in the floor of a storage room and backfilled for radiation shielding. For storage in salt two methods are being considered: (1) use of sleeved holes to protect the canister from direct contact with the salt and (2) placing the canister in direct contact with the salt. In the latter case, particularly, it has been anticipated that the canister will deteriorate and perhaps disappear. In such a case, the intention is to retrieve the waste by coring out the hole and placing the waste in another container, essentially an overpack. However, it is our assessment that deterioration to the point of loss of integrity within the 5-year period will not necessarily occur.

Currently, considerable investigative activity is being directed at the halite strata in the Los Medaños Area of southeastern New Mexico[17]. One of the salt strata 2600 feet below the surface in the Castile Formation is of interest as a medium for storage of high-level wastes. Here the salt is relatively pure and, hence, has good thermal conductivity. The total volatiles is relatively low at 1/2 percent by weight. The ambient temperature is about 30 C and the pressure is normal. Thus far, no unfavorable aspects have been identified.

Impact on the Canister - Metallurgical Factors. From the metallurgical viewpoint the variables that may affect the canister and the kinds of effects they might produce are analogous to those

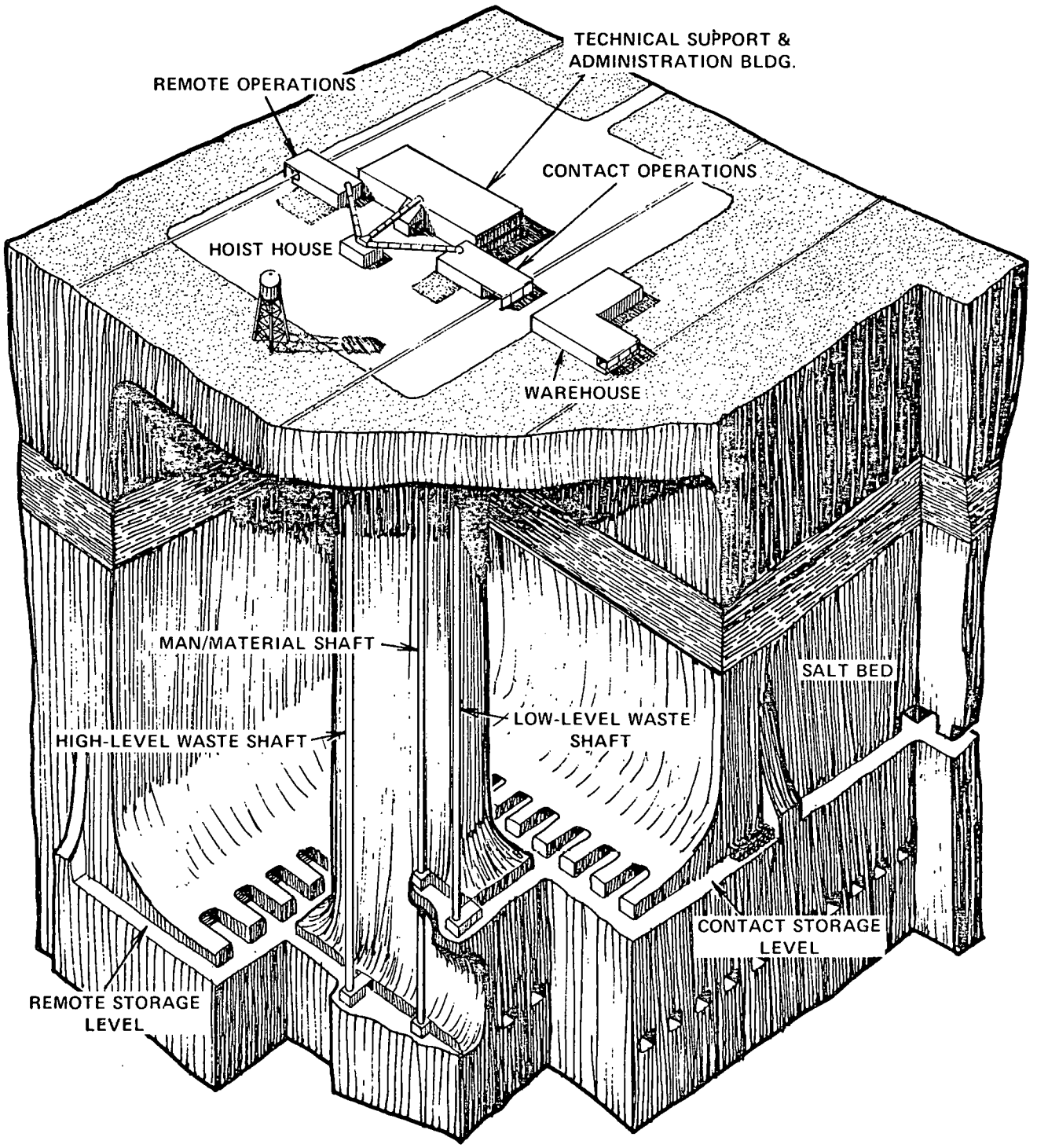

FIGURE 16. CONCEPT OF A BI-LEVEL GEOLOGIC STORAGE FACILITY (1)

to be expected in interim storage. In short, they are the temperature-time effects discussed in the section on Interim Storage in Water and Interim Storage in Air.

Impact on the Canister - Environmental Factors. The availability of water is a major consideration in evaluating corrosion behavior of canister materials in geologic storage. If no water reaches the canister surface there is little likelihood that significant corrosion of even mild-steel canisters will occur even in salt-bed storage. For example, plain-carbon steel equipment in potash mines of the Southwest exhibits little corrosion unless moisture is present.

Of the four types of storage being considered (i.e., salt beds, granite, basalt, and shale) salt beds appear to be potentially much more corrosive than any of the other formations. For example, typical salt formations contain some 0.5 percent water trapped in tiny pockets. Experiments suggest that moisture will move if a temperature gradient occurs in the salt, such as will occur when a canister of waste is placed in the salt. The water pocket may move in the direction of the high temperature. It has been reported that as much as two or three liters of water per year may migrate to the surface of the canister[16]. If indeed this condition occurs then rapid corrosion of even high-alloy materials may take place since HCl and Cl_2 are likely to form as a result of chemical reactions induced by radiation.

On the other hand, there is some indication that a small amount of gas (10 percent) in the area of the canister may block migration of the water pockets. This seems to be somewhat confirmed by an experiment conducted at Sandia Laboratories. In this experiment a heater was placed in the center of a large cube of salt. Corrosion coupons were placed around the heater. After 4 months of exposure no significant corrosion was noted even for the carbon-steel heater[18]. Sandia is just setting up autoclave tests which are designed to establish the corrosivity of the salt-storage environment.

From the data available today it is difficult to assess the magnitude of the corrosion problem to be encountered in salt-bed storage where there is no significant moisture intrusion. However, should salt-containing moisture contact the canister while at the same time the canister temperature is above the boiling point of the solution (a very probable situation), then the salt would concentrate on the canister's surface. Under these circumstances even a solution annealed 304 L stainless steel would be expected to fail by stress-corrosion cracking. Carbon steel would not be susceptible to this kind of attack but would experience some general corrosive attack. For this reason and because of the cost differential, it would appear that for the 5 year retrieval period in geologic storage the most cost-effective plan would be to overpack with a carbon-steel canister of the moderately heavy wall type.

Consideration was given also to the practicality of applying cathodic protection to prevent corrosion of the canister. While this appears feasible using zinc or magnesium anodes it may not be desirable since under these conditions moisture would be driven toward the canister by the current flow.

The basalt, granite, and shale storage do not appear to present corrosion problems in the absence of water. Studies are now under way at Pennsylvania State University to determine phase changes occurring in both basalt and shale when mixed with water and under irradiation. Data are not available at this time. However, based on experience it is suggested that, in the presence of water, salts could be leached which might accelerate corrosion of canister materials. On the other hand, availability of oxygen to depolarize the cathodic reaction may be low and thus corrosion may be light.

Depending on the nature of the salts leached it is possible that stress-corrosion cracking of both carbon steel and stainless steel could occur. However, this possibility seems remote.

From a consideration of all the data it would appear that carbon steels or Type 304 L canister materials will have useful corrosion lives in basalt, granite, and shale storage.

Phase 2. Fabrication and Quality Assurance

Fabrication

Canister. Type 304 L stainless steel canisters have been made by rolling and welding light plate, i.e., 0.250-inch thickness. They also have been made from both seamless and welded 8-, 12-, and 16-inch diameter Schedule 40 pipe. Battelle's Pacific Northwest Laboratories plans to have the next generation of canisters used in their investigations fabricated from welded or seamless 12-, 16-, and 24-inch diameter Schedule 20 pipe[19]. It is doubtful that seamless 24-inch diameter Schedule 20 pipe is available, but seamless 24-inch diameter by 0.500-inch wall pipe is producible[20]. Type 304 stainless steel pipe, 24 inches in diameter by 1-inch wall, has been produced by centrifugal casting as has 14-1/2-inch OD by 1/2-inch wall pipe[21]. In all cases, to complete the canister, a bottom plate and a top ring or head must be welded to the pipe.

By backward extrusion and/or shear forming it is possible to produce a bottle, i.e., a cylinder with an integral bottom. In this case only a head need be welded on.

Thus, there are a number of procedures by which the canister can be fabricated. However, production of the canister by rolling and welding light plate or by using welded pipe is deemed to be entirely satisfactory. Type 304 L stainless steel is readily weldable; all joints can be inspected thoroughly and easily; and the assembly can be solution-annealed following welding so as to obliterate undesirable heat-affected zones.

The use of seamless pipe would eliminate only one weld, the longitudinal seam weld. Fabrication of a cylindrical canister with an integral bottom would be very desirable, but is not considered necessary and hence not judged to be cost effective.

Overpack. When a 304 L stainless steel overpack is called for, the container can be fabricated in the same manner as the 304 L canister.

Carbon-steel overpacks, such as are being considered for interim storage in air, may have a 25-inch ID and wall thicknesses of 2, 8, or 14 inches depending on the particular air-storage concept. The 2-inch wall overpack can be produced in several ways. A simple and satisfactory way is to roll and weld a 2-inch thick plate. It could also be extruded or centrifugally cast.

Overpacks with 8- or 14-inch walls could be produced by forging and boring ingots. One producer has indicated that it would be possible to produce either with an integral bottom but not in one piece by trepanning and backward extrusion[22]. Probably, two pieces would be required for the 8-inch wall container and three pieces for the 14-inch wall overpack. Of course, it would be necessary to assemble the sections by girth welding. Carbon steel is readily welded in thick sections by electroslag, narrow-gap, and other techniques.

So far as carbon-steel overpack fabrication is concerned there is little to choose among the methods from the technical point of view. The decision is principally an economic one. Comparative cost data are not available. However, it is clear that the 2-inch wall overpack, probably produced by rolling and welding, will be the lowest in cost.

Welding of High-Level Waste Canisters

It is anticipated that high-level waste canisters will be in the form of thin-wall cylinders with a diameter in the order of 16 - 24 inches, a length of 8 - 12 feet, and a wall thickness of approximately 0.250 - 0.687 inch. They will be fabricated from Type 304 L stainless steel, the reference material for this analysis, probably in the following four principal steps:

- Roll and longitudinally weld a right cylinder
- Form and circumferentially weld a lower end cap on the cylinder

- Form and circumferentially weld an upper end cap containing an opening for waste filling and including a fitting for mechanically locking and weld sealing a closure cap

- Seal weld the closure fitting after filling.

There are numerous details that accompany the canister fabrication. Although there are no major technical obstacles to accomplishing the fabrication of a highly reliable container, it is essential that sound metallurgical and engineering practices be followed to ensure the desired reliability. Important principles and precautions are discussed in the sections that follow.

Metallurgical Factors Influencing the Weldability of Type 304 L Stainless Steel. Among the several classes of stainless steels that are available, the austenitic chromium-nickel grade, which includes Type 304 L, has the best weldability. No difficulty is expected in producing sound weldments as long as reasonably well-controlled practices are followed. These are thoroughly described in the literature[23-31]. The two most important potential problem areas are sensitization to stress-corrosion cracking and weld-metal fissuring in multipass welds.

The latter problem, weld-metal fissuring, is easily alleviated by welding using a filler-metal composition that produces a deposit having a minimum ferrite content corresponding to "Ferrite Number" 3, approximately 3 volume percent[32]. In addition to eliminating fissuring, the low susceptibility of austentitic stainless steel weld-metal deposits to stress-corrosion cracking, relative to wrought base plate of a similar composition, has been attributed to the dendritic solidification structure and, possibly, the presence of interdendritic ferrite[26,28]. If autogenous, single-pass welds are made, fissuring is unlikely, even if there is no fusion-zone ferrite, because fissures generally occur in the heat-affected zone of an underlying weld-metal deposit.

Sensitization of weld-metal deposits (in multipass welds) and heat-affected zones is a greater problem than weld-metal fissuring, and

is dependent on many factors. Using proper welding procedures, sensitization of 308 L weld metal (if used) and 304 L weld metal or heat-affected zone metal is minimal. However, even slight sensitization must be avoided in this application. Before filling with waste, the empty canister can be cold or hot sized to eliminate any undesirable distortion and attain final dimensions as needed and then solution-annealed at 1000 - 1120 C (1830 - 2050 F) and rapidly cooled to eliminate sensitization and equalize residual stresses due to welding and forming.

The final seal weld presents a problem because post-weld solution annealing and rapid cooling are more difficult to accomplish. It may be possible, however, to design a closure that would allow local solution-annealing and rapid cooling to eliminate sensitization.

Welding Processes and Procedures. It is expected that canisters will be fabricated from Type 304 L wrought plate by rolling and seam welding a cylinder followed by circumferentially welding end caps having the desired configurations.

Among the several processes that could be used to fabricate the canisters, the plasma-arc welding (PAW) and gas-tungsten arc welding (GTAW) processes are logical choices. Both processes produce high-quality welds and the necessary equipment for each is widely available. GTA welds would be made using a machined groove between the components and filler-metal additions (Type 308 L wire). The wire could be heated to reduce the energy input and, therefore, the amount of sensitization in the heat-affected zones and underlying weld-metal deposits. An advantage of the PAW process is that low energy input welds could be made using a square butt joint and without the addition of filler metal.

Typical setups for making longitudinal and circumferential welds using an automatic welding process are shown in Figures 17-19. The detailed parameters associated with joint design, cleaning, filler-metal addition, fixturing, and welding conditions can be established from published information[23, 29, 30] and welding trials.

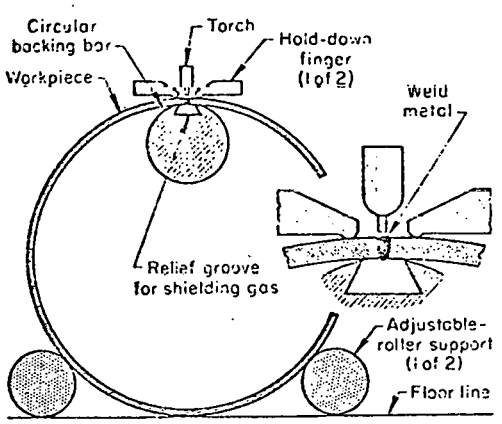

FIGURE 17. SETUP FOR AUTOMATIC WELDING OF LONGITUDINAL BUTT JOINTS[30]

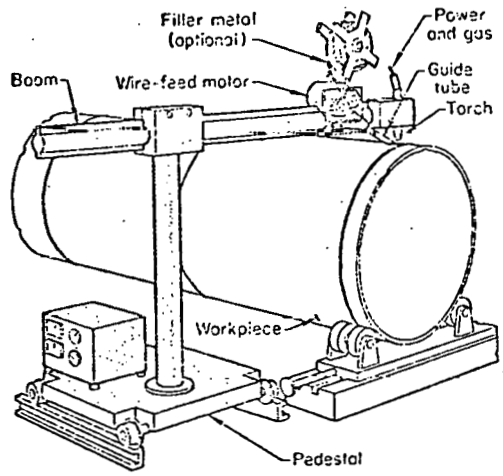

FIGURE 18. USE OF A PEDESTAL BOOM MANIPULATOR FOR MAKING A CIRCUMFERENTIAL (GIRTH) WELD[30]

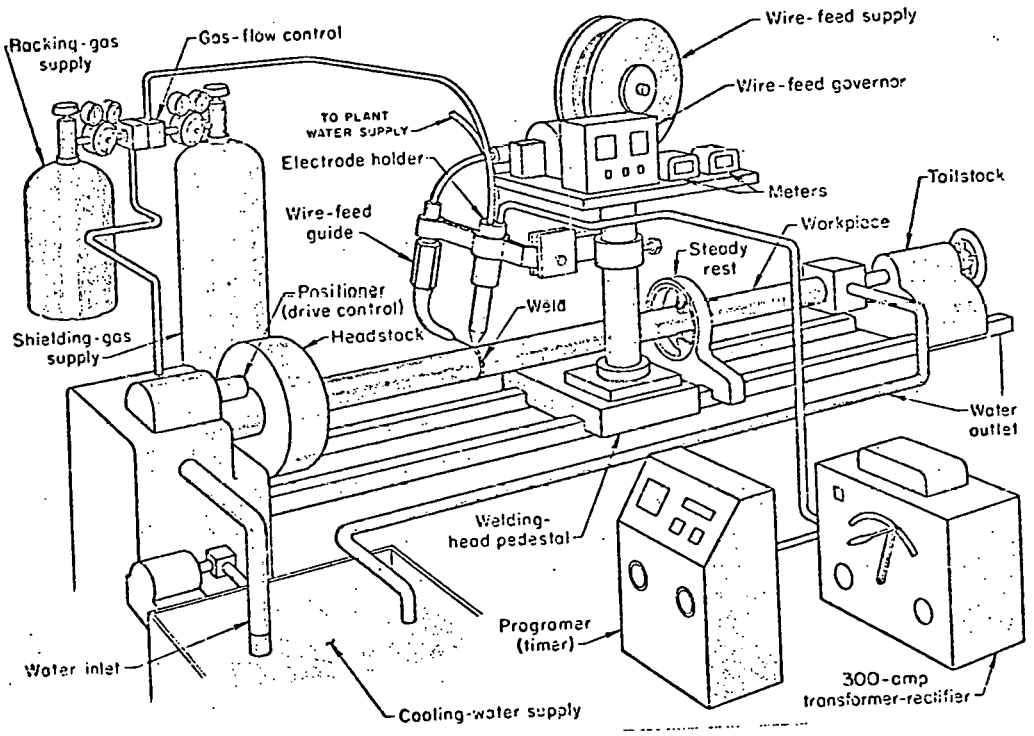

FIGURE 19. HOUSING FOR A NUCLEAR-REACTOR COMPONENT THAT WAS WELDED IN THE LATHE SETUP SHOWN, TO MAINTAIN CRITICAL ALIGNMENT, AND FOR WHICH CONSUMABLE INSERT RINGS WERE USED FOR ROOT PASSES, TO ENSURE WELD SOUNDNESS[30]

Remote Closure of Seal Weld. After the canister is filled with the high-level waste material, the closure cap is welded to the upper end-cap fitting to seal the canister. Although the detailed design of the closure has not been determined, it is reasonable to give a strong preference to GTA welding without filler-wire addition because this process is readily adapted to hot-cell fabrication. The closure probably can be designed to provide filler metal by meltdown of extra metal at the joint, as is commonly done in fuel-element end caps. Other processes, such as GTAW with filler-wire additions or inertia welding, also could be used. However, these processes are more difficult to implement in a hot-cell environment and may not be economically justifiable unless a large number of canisters were to be used.

Surface Preparation

From the standpoint of corrosion resistance it is desirable to have the surface of the canister free of grease, dirt, and oxide films. Even temper-color films may result in adverse electrochemical conditions which could result in accelerated local attack.

After fabrication but prior to filling, the canister should be given a light vapor blast to remove the thin oxide films formed during welding. Of particular importance is that no oil or grease spots be present on the canister surface during filling at temperature. Such spots could result in undesirable localized carbon pickup.

Since the canister surface should be free of oxide after filling we favor a controlled atmosphere around the canister during filling rather than electropolishing to remove the heavy oxide films formed during heating in air. We are concerned that during electropolishing some preferential attack will take place at the grain boundaries of the canister should it become sensitized during filling, as is quite probable. Such a condition will increase susceptibility to stress-corrosion cracking.

If interim water storage is used then there is a chance the surface could become contaminated. In the event that an overpack might be used for the geological storage it may not be necessary to decontaminate prior to overpacking. On the other hand, if decontamination is necessary a high-pressure steam lance is preferred to a chemical decontamination step.

Stress Relief

As pointed out in the section on In-Can Zone Melting, stress relieving the 304 L canister after seal welding will serve no useful purpose for two reasons. First, cooling rates from the stress-relieving temperature are expected to be too slow to prevent sensitization of the metal. Second, because of the difference in expansion coefficients between the metal and the waste, the metal will go into tension on cooling, a stress condition that invites stress-corrosion cracking. Therefore, post-filling stress relief is not recommended.

On the other hand, it is only good practice to solution-anneal the canister after assembly but before filling and seal welding. This is done by heating at temperatures of 1000 - 1120 C followed by fast cooling. The purpose is to eradicate sensitization caused by welding and to reduce and equalize stresses arising from welding and forming. This step opens the possibility of ending up with a filled and seal-welded canister free of sensitization, depending on the rapidity of cooling following filling and seal welding. As mentioned earlier in the report, an experimental investigation should be made of cooling-rate capabilities following these operations. For the same reason, an overpack fabricated from 304 L stainless steel should be solution-annealed before being placed in service.

In the case of carbon-steel overpacks such as are being considered for the various concepts of interim storage in air, with one exception, there is no reason for stress relieving after fabrication. The exception is the SSCC-MW concept which requires exposure of the bare carbon-steel overpack to the atmosphere while supported

on concrete cradles as a simple beam. Under certain environmental conditions discussed in Phase 1 stress-corrosion cracking is possible. To minimize this possibility stress relieving the overpack before use is advised. A good practice would be to heat at 1150 F, holding at temperature 1 hour per inch of thickness and cooling at a controlled rate in accordance with Section III of the ASME Boiler Code. The cooling rate should be slow enough to avoid thermal gradients that would create internal stresses in the container but not so slow as to cause temper brittleness in the steel. Toward these objectives, Section III of the Code specifies that the cooling rate be no greater than 500 F per hour divided by the maximum metal thickness but in no case more than 500 F per hour.

In no instance is it necessary to stress relieve a carbon-steel overpack after seal welding the lid.

Postweld Nondestructive Inspection

The two circumferential welds and one longitudinal weld in a rolled and welded unfilled canister can be inspected adequately using routine nondestructive examination methods. Weld surface quality is normally assessed using visual observation, aided by commonly available items such as lights, magnifiers, and contour gages. The absence of surface-connected cracking is verified using liquid penetrant means. The absence of internal voids is determined using the volumetric inspection methods of radiography and pulse-echo ultrasonic testing. High sensitivity and radiographic contrast can be assured using single-wall exposure techniques, supported by optimized selection of sources and source-to-film distances. Sensitivities better than 2 percent can be readily attained when examining the unfilled canisters. Radiographic examination normally detects the presence of internal voids (such as gas porosity) and can readily detect the presence of inclusions as well as geometrical conditions detrimental to service life (such as lack of complete penetration and fusion).

However, weld cracks can be hard to detect using radiographic means and this is where the complementary method of ultrasonic pulse-echo testing often is applied. Transducer systems can be used to scan the long seam and circumferential girth welds rapidly for the presence of cracking. Typical operating conditions use either immersion techniques or sliding contacts which are specifically designed for the canister designs of interest. Final verification for the lack of any leakage paths through the walls (i.e., welds or weld-heat-affected zones) of the canister is made using one of two leak-testing methods. Standard hydrostatic testing methods are used to assure that no leakage paths are present, through the use of added stressing associated with the "pressurize and hold" procedures commonly used in this technique. If this form of leak testing is inappropriate for some reason, helium leak testing can be performed using a detector. The detector is normally near the outside surface while pressurized helium is maintained on the inside.

After filling, the canister's long and circumferential seams could be rechecked, if necessary; however, the problems of access and the presence of radioactivity limit the reinspection to that of ultrasonic scanning. Examination of the welds by ultrasonic scanning is accomplished using specially designed transducer systems which have been qualified (or proven satisfactory) for this particular application. The scanning is done either under water or in the open with the canister positioned vertically. Underwater scanning is generally considered more reliable and is encouraged. It is not likely that meaningful radiography will be possible on the complex geometries normally associated with closure welds.

The absence of leakage is verified further through using helium purging gas which is also used as an inert gas shield on the root side of the seal weld. The helium leak detector is used to determine whether any helium is escaping from the confined volume within the canister. Various alternative, but more complex, approaches to leak detection are possible but they would probably not be considered practical solutions for assuring the absence of leakage around the seal weld.

Phase 3. Alternative Canister Materials And Canister Systems

Alternative Canister Materials

As discussed in several sections of Phase 1, a canister made of the reference material, 304 L stainless steel, will become sensitized after the filling stage unless it can be cooled very rapidly past the nose of the C-curve shown in Figure 4. Achievement of the necessary cooling rate appears highly unlikely. This situation holds whether the in-can zone-melting concept, the continuous ceramic-melter concept, or the fluid-bed calcination plus stabilization concept is used. Sensitization also can occur with the glass-ceramic concept if a molten metal or alloy is used as the heat-transfer matrix and the canister's temperature is much above 500 C during pouring.

The circumstance in which sensitization of the canister is a matter of dominating concern is interim storage in water. Here stress-corrosion cracking is to be expected in sensitized stainless steel even when the chloride content of the water is very low, as discussed in Phase 1. Thus, to obtain complete integrity and reliability in a containment system suitable for interim storage in water requires either overpacking the canister with another 304 L stainless steel container which has been solution-annealed and fast cooled from the annealing temperature to ensure freedom from sensitization, or fabricating the canister from a material that is not susceptible to stress-corrosion cracking under the conditions that will prevail.

In the latter category are Inconel 600 (15.5 percent Cr, 8 percent Fe, 76 percent Ni), Incoloy 800 (21 percent Cr, 46 percent Fe, 32.5 percent Ni), and Incoloy 825 (21.5 percent Cr, 30 percent Fe, 42 percent Ni). These alloys are, or can be made, available in about all the mill-product forms in which 304 L stainless steel can be obtained. They are readily formed hot and cold and are weldable by all the standard procedures. Excellent surface finishes are obtainable on these alloys. They will present no unusual problems regarding fabrication, decontamination, or inspection. These alloys are at least as

strong, tough, and ductile as 304 L stainless steel; in addition, they have somewhat greater elevated-temperature strength and considerably greater oxidation resistance than 304 L[33].

As suggested above, use of any of these alloys will provide a canister having complete integrity in interim storage in water without the need for an overpack. However, because of their high-alloy content, these alloys are in the order of 4 to 6 times the price of 304 L stainless steel, depending on the mill-product form and local or transient economic factors.

On the other hand, the water used for interim storage will be sufficiently pure that a carbon steel or low-alloy steel canister could be used, especially if it had a moderately thick wall. However, the canister will rust, although slowly. Inevitably, the products of the rusting reactions will slough off the canister and load the water in the storage basin. The water will become murky and the corrosion products may tend to deposit on the surfaces of other materials, items, and structures in the basin.

Interim storage in air opens the way for carbon- and low-alloy steels as candidate canister materials, depending on the concept used to fill the canister. In this case, there is no need for resistance to aqueous-chloride induced stress-corrosion cracking. Carbon or low-alloy steels will be suitable if canister temperature can be held down to moderate levels during filling, e.g., 450 - 600 C, depending on filling time. These steels have limited elevated-temperature strength and oxidation resistance. However, for the shorter filling times and lower metal temperatures carbon steel should be satisfactory; for the higher temperatures and longer filling times, an alloy such as 2-1/4 Cr-1 Mo steel is suggested. The latter is the standard workhorse pressure vessel and piping steel used in the chemical and petrochemical industries and in the electric power generating industry.

The possibility appears strong that the continuous ceramic melter concept offers a way to fill the canister while maintaining canister-wall temperature at moderate levels. In fact, carbon-steel canisters are now being used at Battelle's Pacific Northwest Laboratories in experimental work on the ceramic-melter concept. The glass-ceramic concept offers a similar opportunity.

Carbon steels and low-alloy steels of the Cr-Mo type are available in the required mill-product forms, are readily weldable by a host of techniques, and should present no unusual problems. They have the distinct advantage of being far lower in cost, from about 1/4 to about 1/10 that of stainless steels and nickel-base alloys.

Alternative Canister Systems

As has been discussed immediately above and earlier in the report, a containment system designed for interim storage in water which uses a canister made of 304 L stainless steel and at the same time possesses complete integrity must include overpacking in a desensitized 304 L container. As previously stated, the alternative is to make the canister of such alloys as Inconel 600, Alloy 800, or Alloy 825, which are not susceptible to stress-corrosion cracking under the conditions that will prevail, or possibly of carbon steel or a low-alloy steel.

Also, as is dealt with further in the sections entitled "Conclusions" and "Recommendations", if interim storage in air is acceptable, there is no need for canisters made of such high-cost materials as stainless steel or nickel-base alloys. Procedures for filling the canister very likely can be developed such that carbon-steel or low-alloy steel canisters will be entirely satisfactory. Moreover, as discussed in the section on the Phase 1 study and in the section that follows, a carbon-steel or low-alloy steel canister, overpack, or cask has several advantages in terms of geologic storage.

CONCLUSIONS

The section of this report entitled Phase 1 has presented a discussion of the metallurgical and environmental factors considered to have an impact on the reliability and integrity of high-level-waste canisters fabricated from 304 L stainless steel as they progress through

the series of sequences stipulated in the section on Plan of the Investigation. Table 3, in distilled form, presents the conclusions that have been drawn from this discussion as it relates to the sequence of events encompassing filling the canisters and placing them in interim storage in water or in air. It is seen from this Table that the principal adverse metallurgical effect is sensitization, while the principal environmental problem is chloride stress-corrosion cracking arising from sensitization and associated with storage in water. In addition, there is the possibility of stress-corrosion cracking of the carbon-steel cask used in the SSCC-MW concept (exposed directly to the atmosphere as a single beam). Here, the corroding agents would be caustic and/or nitrate salts concentrating on the surface as the result of alternate wetting and drying. The other air-storage concepts present no adverse aspects. On the other hand, overpacking the canister with a desensitized 304 L container produces a containment system entirely satisfactory for water storage.

In Table 4 the probable consequences of shipping the various containment systems are listed in succinct form. Here it is assumed that the canisters have undergone interim storage and are in transit to the site of geologic storage, where they may or may not be overpacked, depending on the geologic storage concept. Again, it is to be noted that problems are not anticipated with a dry environment. On the other hand, wet shipping may or may not have an adverse effect, depending on whether or not the outer container (canister or overpack) has been sensitized.

In the same manner, the sequences and their probable consequences as they apply to geologic storage are given in Table 5. It is seen that adverse effects are not to be expected in the absence of moisture. However, when salt-containing moisture is in contact with the 304 L canister or 304 L overpack and the metal temperature is high enough for evaporation to occur (as is highly probable) with resulting concentration of salt on the container's surface, stress-corrosion cracking is to be expected even in solution-annealed and fast-cooled 304 L stainless steel. In this connection, it should be noted that solution annealing followed by the required fast cooling does not

TABLE 3. EFFECT OF ENVIRONMENTAL SEQUENCES FOR WASTE SOLIDIFICATION AND INTERIM STORAGE

Sequence	Probable Consequences
(1) In-can melting	Sensitization
Storage in water, base	Stress-corrosion cracking
Storage in water, overpacked[a]	No stress-corrosion cracking
(2) Filled from ceramic melter	Sensitization
Storage in water, bare	Stress-corrosion cracking
Storage in water, overpacked[a]	No stress-corrosion cracking
(3) Fluid-bed calcination plus stabilization	Sensitization
Storage in water, bare	Stress-corrosion cracking
Storage in water, overpacked[a]	No stress-corrosion cracking
(4) Load with glass-ceramic wafers	No effect
Add heat-transfer matrix	No effect[b]
Storage in water, bare	No stress-corrosion cracking
Storage in water, overpacked[a]	No stress-corrosion cracking
(5) In-can melting	Sensitization
Encased in C-steel cask	No effect
Storage in air, shielded[c]	Canister - No effect Cask - Mild rusting
Storage in air, bare[d]	Canister - No effect Cask - Possible stress-corrosion cracking
(6) Filled from ceramic melter	Sensitization
Encased in C-steel cask	No effect
Storage in air, shielded[c]	Canister - No effect Cask - Mild rusting
Storage in air, bare[d]	Canister - No effect Cask - Possible stress-corrosion cracking

TABLE 3. (Continued)

Sequence	Probable Consequences
(7) Fluid-bed calcination plus stabilization	Sensitization
Encased in C-steel cask	No effect
Storage in air, shielded[c]	Canister - No effect Cask - Mild rusting
Storage in air, bare[d]	Canister - No effect Cask - Possible stress-corrosion cracking
(8) Load with glass-ceramic wafers	No effect
Add heat-transfer matrix	No effect[b]
Encase in C-steel cask	No effect
Storage in air, shielded[c]	Canister - No effect Cask - Mild rusting
Storage in air, bare[d]	Canister - No effect Cask - Possible stress-corrosion cracking

(a) Overpacked with a desensitized 304 L container

(b) Depending on the temperature and time at temperature experienced during fillings of the canister with the matrix material

(c) Stored vertically on a pad, surrounded with a concrete gamma-neutron shield, capped with a concrete slab; or stored in an air-cooled vault

(d) Stored horizontally on concrete cradles as a simple beam exposed directly to the atmosphere.

TABLE 4. EFFECT OF ENVIRONMENTAL SEQUENCES FOR SHIPPING

Sequence	Probable Consequences
Canister bare, shipped wet	Stress-corrosion cracking[a]
Canister bare, shipped dry	No effect
Canister overpacked,[b] shipped wet	No stress-corrosion cracking
Canister overpacked,[b] shipped dry	No effect
Canister encased in C-steel cask, shipped wet	Minor general corrosion, perhaps minor pitting
Canister encased in C-steel cask, shipped dry	No effect

(a) Except when loaded with glass-ceramic wafers, Sequence (4), Table 3. In this case the canister may not be sensitized and therefore stress-corrosion cracking may not occur during shipping.

(b) Overpacked with a desensitized 304 L container.

TABLE 5. EFFECT OF ENVIRONMENTAL SEQUENCES FOR GEOLOGIC STORAGE

Sequence	Probable Consequence
Canister bare,[a] salt bed, dry	No effect
Canister bare,[a] salt bed, in contact with moisture and salt	Stress-corrosion cracking
Canister bare,[a] stored in other media,[b] dry	No effect
Canister bare,[a] stored in other media,[b] in contact with moisture and various salts	Stress-corrosion cracking
Canister overpacked,[c] salt bed, dry	No effect
Canister overpacked,[c] salt bed, in contact with moisture and salt	Stress-corrosion cracking of overpack.[d] No effect on canister
Canister overpacked,[c] stored in other media,[b] dry	No effect
Canister overpacked,[c] stored in other media,[b] in contact with moisture and various salts	Probably no stress-corrosion cracking of overpack. No effect effect on canister
Canister in C-steel cask, salt bed bed, dry	No effect
Canister in C-steel cask, salt bed in contact with moisture and salt	Some general corrosion of cask. No effect on canister
Canister in C-steel cask, stored in other media,[b] dry	No effect
Canister in C-steel cask, stored in other media,[b] in contact with moisture and various salts	Some general corrosion of cask. No effect on canister

(a) The canister is assumed to be sensitized.
(b) E.g., basalt, shale, granite
(c) Overpacked with a desensitized 304 L container
(d) Assuming canister temperature is high enough to promote concentration of the salt.

effect stress relief. On the other hand, it is expected that a carbon-steel overpack or cask will perform satisfactorily even in the presence of moisture and a variety of salts. General corrosion and pitting of the cask are anticipated; therefore, the cask should have a moderately thick wall in order to ensure that it maintains its integrity for a minimum of 5 years and thus makes possible ready retrievability.

The above discussions are predicated on the proposition that the canisters and overpacks (casks) have been fabricated in a satisfactory manner, heat treated as appropriate, inspected thoroughly, filled with the waste load, the lid affixed and seal welded, and the assembly successfully reinspected after filling and seal welding, all in accordance with the procedures discussed in the section covering Phase 2 of the investigation.

Some points that emerged in the Phase 3 study should be reiterated. If the decision is for interim storage in water, then for complete integrity of the containment system the choice is either to overpack the 304 L canister with a desensitized 304 L container or to fabricate the canister from a material suitably resistant to stress-corrosion cracking such as Incoloy 800, Incoloy 825, or Inconel 600.

On the other hand, interim storage in air (in particular, those concepts that do not require direct exposure to the atmosphere), coupled with the continuous ceramic melter or the glass-ceramic concept for filling the canister makes feasible the use of carbon or low-alloy steel canisters. Such canisters are deemed suitable for geologic storage as suggested in Table 5, are comparatively low in cost, and require small, if any, quantities of such important nonreplaceable resources as chromium and nickel. Of course, a necessary condition regarding interim storage in air is that the cooling system be capable of maintaining canister and waste temperatures at acceptable levels.

RECOMMENDATIONS

Based on the data collected and the observations made in this investigation and the inferences drawn therefrom, several suggestions

are offered regarding preferred sequences to ensure the required reliability and service life of canister materials for containment of solidified high-level wastes.

From the standpoint of the reliability and service life of the containment system, converting the high-level liquid waste to glass in the continuous ceramic melter, filling the canister from the melter, and storing in air for the interim period has much to offer provided that effective cooling is achieved or that the waste has aged sufficiently to reduce heat density substantially. The suggested sequence is as follows:

(1) Produce the glass in the continuous ceramic melter.

(2) Pour glass into a medium-wall carbon-steel or Cr-Mo-steel canister (perhaps 3 - 5 inches thick), maintaining canister wall temperature at moderate levels, i.e., at or below about 550 C.

(3) Mechanically lock and seal-weld the lid, inspect.

(4) Store in air for the interim period using the concept (SSCC) in which the canister is placed upright on a pad inside a concrete radiation shield and provided with a concrete cap.

(5) At the end of the interim period ship to geologic storage.

This suggested sequence is technically feasible, uses readily available materials comparatively low in cost, requires only one container, uses materials that are metallurgically stable and compatible with the anticipated environments. Procurement, fabrication, and inspection should pose no unusual problems. Moreover, only small quantities, if any, of critical materials such as nickel and chromium will be required.

Should interim storage in water be mandatory (because of high heat removal requirements), then either of two other sequences is suggested. One of these is as follows:

(1) Convert the high-level liquid waste to glass or calcine by a convenient method, though the continuous ceramic melter is preferred.

(2) Use a 304 L stainless steel canister.

(3) Mechanically lock and seal-weld the lid, inspect.

(4) Overpack with a solution-annealed 304 L stainless steel container.

(5) Mechanically lock and seal-weld the lid, inspect. Be sure that the outside surface is clean and free from oxide films, crevices, overfills, and undercuts.

(6) Store in water for the interim period.

(7) At the end of the interim period, overpack with a carbon-steel cask of medium wall thickness.

(8) Place in geologic storage.

The other suggested sequence is based on the use of an alloy such as Inconel 600 or Incoloy Alloy 825 rather than 304 L stainless steel for the canister. The steps are as follows:

(1) Convert the high-level liquid waste to glass or calcine by a convenient method, preferably the continuous ceramic melter.

(2) Use an Inconel 600, Incoloy 800, or Incoloy 825 canister*.

(3) Mechanically lock and seal-weld the lid, inspect. Be sure the outside surface is clean and free of oxide films, crevices, overfills and undercuts.

(4) Store in water for the interim period.

(5) At the end of the interim period, overpack with a carbon-steel cask of medium wall thickness.

(6) Place in geologic storage.

The first of these two sequences is based on use of the reference canister material, 304 L stainless steel, which provides the advantage of dealing with a material that by now is familiar to much of the concerned personnel.

The reason for favoring the ceramic melter concept is that, because melting is done outside the canister, the technique subjects the canister to less severe conditions than do the other concepts, with one exception. In particular, maximum metal temperature can be held to moderate levels and time at temperature can be fairly short. The exception is the glass-ceramic concept. The problem with this concept is that little is known about its applicability to high-level waste containment nor about the parameters that control the process. Until more is learned it is deemed necessary to set aside this concept for the time being.

Overpacking the canister is necessary to ensure complete integrity and reliability of the containment system. It is estimated

---

* Or possibly carbon steel or low-alloy steel. See discussion on page 59.

that the canister most probably will be sensitized as a result of the filling operation. Moreover, it will be in a state of tension following filling. As has been stated earlier, these two conditions render the metal susceptible to stress-corrosion cracking. To avoid the stress-corrosion cracking phenomenon the 304 L overpack must be solution-annealed and fast cooled before use. However, it should not be stress relieved after seal welding.

Again, the surface of the metal in contact with water during storage in water must be completely clean and smooth. Otherwise, localized corrosion is invited.

Also, as discussed in the "Conclusions" section, a moderately thick-walled overpack or cask of carbon or low-alloy steel is suggested for protection in geologic storage. The reason for substantial thickness is to make ample allowance for general corrosion and pitting attack during geologic storage. It is probable that, unless unusual conditions are encountered, no great amount of deterioration will occur in 5 years of geologic storage.

In the second sequence for interim storage in water, Inconel 600, Incoloy 800, or Incoloy 825 are substituted for 304 L stainless steel as the canister material. This change makes overpacking unnecessary for reliable performance during interim storage in water because these materials are not susceptible to stress-corrosion cracking under the conditions that will prevail.

However, it is considered advisable to overpack the canister with a carbon-steel or low-alloy steel cask for geologic storage.

REFERENCES

(1) "Alternatives for Managing Wastes from Reactors and Post-Fission Operations in the LWR Fuel Cycle" (5 volumes), ERDA-76-43, May, 1976.

(2) Slate, S. C., and Ross, W. A., "High-Level Radioactive Waste Glass and Storage Canister Design", to be presented at AICHE Conference on Long-Term Management of High-Level Wastes, November, 1977, 29 pp.

(3) "Annual Report on the Characteristics of High-Level Waste Glasses", Battelle-Pacific Northwest Laboratories, NBWL-2252 UC-70, June, 1977, 99 pp.

(4) VanEcho, J. A., Battelle's Columbus Laboratories, data made available August 29, 1977, from program being conducted for Battelle's Northwest Laboratories regarding the high-temperature strength of 304L during in-can melting of high-level wastes.

(5) Binder, W. O., Brown, C. M., and Frank, Russell, "Resistance to Sensitization of Austenitic Chromium-Nickel Steels of 0.03% Max. Carbon Content", Trans. ASM, 41, 1949, pp 1301-1346.

(6) Slate, S. C., and Maness, R. F., "Corrosion Experience in Nuclear Waste Processing at Battelle-Northwest", Corrosion 77 sponsored by NACE, March 14-18, 1977, Paper No. 81, 19 pp.

(7) Berry, W. E., White, E. L., "Stress Corrosion Cracking of Sensitized Stainless Steel in Oxygenated High Temperature Water", Corrosion, 29, pp 451-469, December, 1973.

(8) Boyd, W. K., and Fink, F. W., "The Corrosion of Metals in Marine Environments", MCIC-75-245R, May, 1975, 87 pp.

(9) Slate, S. C., Battelle's Northwest Laboratories, Richland, Washington, personal communication, August 15, 1977.

(10) Scharfstein, L. R., and Brindley, W. F., "Chloride Stress Corrosion Cracking of Austenitic Stainless Steels - Effect of Temperature and pH", Corrosion, 14 (12), P588T (December, 1958).

(11) Staehle, R. W., Beck, F. W., and Fontana, M. G., "Mechanism of Stress Corrosion of Austenitic Stainless Steels in Chloride Waters", Corrosion, 15 (7), p 51 (July, 1959).

(12) Boyd, W. K., "A Metallurgical Evaluation of RSSF Concepts", report to Atlantic-Richfield-Hanford Company, November 30, 1973, 30 pp.

(13) "Steels for Nuclear Applications", United States Steel Corporation, 1968.

(14) Boyd, W. K., Battelle's Columbus Laboratories, personal communication, observations based on results of industrial research, September 1, 1977.

(15) Scully, L. W., Supervisor, Nuclear Waste Engineering, Sandia Laboratories, Albuquerque, N. M., personal communication, August 17, 1977.

(16) Cohen, B. L., "The Disposal of Radioactive Wastes from Fission Reactors", Scientific American, 236, 6, June, 1977, pp 21-31.

(17) Lambert, S. J., "Program Plan for the Hydrologic Investigation of the Los Medanas Area, New Mexico", March 11, 1977, 16 pp.

(18) Smyrl, William, Sandia Laboratories, Nuclear Waste Technology, personal communication, August 17, 1977.

(19) Slater, S. C., Battelle's Northwest Laboratories, Chemical Technology Section, personal communication, September 12, 1977.

(20) Noland, J., Cameron Iron Works, personal communication, September 8, 1977.

(21) Kay, E., Sandusky Foundry and Machine Company, personal communication, September 12, 1977.

(22) Avery, D., Cameron Iron Works, personal communication, September 12, 1977.

(23) Mishler, H. W., Evans, R. M., and Martin, D. C., "Welding of Stainless Steels", NASA Technical Memorandum NASA TM X-53876, Battelle Memorial Institute, Contract DA-01-021-AMC-11651(Z), (February 16, 1967).

(24) Linnert, G. E., "Welding Characteristics of Stainless Steels", Metals Engineering Quarterly, 7 (4), 1-15 (November, 1967).

(25) Sullivan, R. P., "Fusion Welding of Stainless Steel", ibid, 7 (4), 16-41 (November, 1967).

(26) Rosendahl, C.-H., "Welding of Austenitic Stainless Steels", Svetsaren, 5, (1-2), 2-15 (1969).

(27) Haddrill, D. M., and Humphries, C., "Stainless Steels - A Survey of Their Properties and Characteristics with Particular Reference to Welding", British Welding Research Assoc. Bulletin (1964-1965).

(28) Thielsch, H., "Stainless Steels - Welding Summary", Welding Journal, 34 (1), 22s-30s (1955).

(29) Welding Handbook, Edited by L. Griffing, Sixth Edition, American Welding Socity (1972), "Metals and Their Weldability", Section 4.

(30) Metals Handbook, Edited by T. Lyman, Eighth Edition, American Society for Metals (1971), "Welding and Brazing", Volume 6.

(31) The International Nickel Company, Inc., "Welded Austenitic Chromium - Nickel Stainless - Techniques and Properties" (1967).

(32) Lundin, C. D., et. al., "Ferrite - Fissuring Relationship in Austenitic Stainless Steel Weld Metals", Welding Journal, 54 (8), 241p-246s (1975).

(33) Inconel Alloy 600, Huntington Alloy Products Division, The International Nickel Company, Inc., Huntington, West Virginia, 25720, p 15.

(34) Photograph supplied by Elmer Lusk, Battelle's Columbus Laboratories.

Battelle
Columbus Laboratories
505 King Avenue
Columbus, Ohio 43201
Telephone (614) 424-6424