1732 221 2-6-81

(1) Dr.2268

JANUARY 1981

PPPL-1732
UC-20a,c

MASTER

R-1768

THE EFFECT OF HYDROGEN GLOW DISCHARGE CONDITIONING ON ZR/AL GETTER PUMPS

BY

H. F. DYLLA, J. L. CECCHI,
AND M. ULRICKSON

PLASMA PHYSICS LABORATORY

DISTRIBUTION OF THIS DOCUMENT IS UNLIMITED

PRINCETON UNIVERSITY
PRINCETON, NEW JERSEY

This work was supported by the U.S. Department of Energy Contract No. DE-AC02-76-CHO 3073. Reproduction, translation, publication, use and disposal, in whole or in part, by or for the United States government is permitted.

DISCLAIMER

The effect of hydrogen glow discharge conditioning on Zr/Al getter pumps

H. F. Dylla, J. L. Cecchi, and M. Ulrickson

Plasma Physics Laboratory, Princeton University
Princeton, NJ 08544

Zr/Al bulk getter pumps are presently being considered for use in the Tokamak Fusion Test Reactor (TFTR) to reduce impurities and limit the recycling of hydrogenic species. It is necessary that these pumps not be adversely affected by the hydrogen glow discharge cleaning (GDC) which is planned as part of the routine TFTR vessel wall conditioning. The GDC procedure involves the use of a dc glow discharge with a 400 V bias voltage. The total fluence of hydrogenic ions given to the affected surfaces during a typical conditioning period is 10^{18} cm^{-2}. We have investigated the effects of typical GDC runs on a getter-pump module containing 25 g of Zr/Al mounted in a 100 liter test stand. Pumping speed, capacity, and regeneration characteristics have been studied after various exposures to GDC.

DISTRIBUTION OF THIS DOCUMENT IS UNLIMITED

I. INTRODUCTION

Non-evaporable getters employing a Zr/Al (16%) alloy[1] are being considered for in-torus pumping in the Tokamak Fusion Test Reactor (TFTR). In a number of recent tokamak experiments[2] the influx of low Z (mainly oxygen) impurities has been minimized by titanium film sublimated on a fraction (10-40%) of the vacuum vessel surface areas. Such in-torus pumping usually dominates the primary vacuum system by an order of magnitude in net pumping speed for both hydrogenic and impurity species. The increased pumping speed for hydrogenic species allows effective density control which is necessary to optimize plasma heating schemes.[3,4]

The use of a non-evaporable gettering scheme for in-torus pumping in TFTR is planned because of the necessity to manage a finite tritium inventory. TFTR will be fueled for full-power discharges with a 50%/50% mixture of D-T. After the allowable in-torus tritium inventory is reached, the getter panels are regenerated (by heating to 650-700 C), returning the tritium to the gas phase for removal by the primary vacuum system.

Proper integration of a Zr/Al getter panel within the TFTR vacuum vessel requires an understanding of the interaction of the getter materials with the discharge cleaning plasmas which will be used to condition the remaining surface area of the vessel. The primary conditioning technique planned for TFTR is a hydrogen glow discharge conditioning (GDC) which has recently been applied to and successfully conditioned the large (40 m^3) vacuum vessels of the PDX[2,5] and ASDEX[6] divertor tokamaks.

The GDC procedure subjects all grounded components of the vacuum vessel to low energy hydrogenic ion bombardment reducing surface contaminants (hydrocarbons and oxides) by forming volatile species (H_2O, CO, CH_4, C_2H_4, etc.) which are removed by the primary vacuum system. It is the purpose of this paper to describe the effects of the GDC procedure on the performance of the Zr/Al getter pumps. Two concerns were expressed at the onset of the study: (1) the possible effect of the GDC on the H_2 sorption properties of the pump; and (2) the possibility of excessive hydrogenic loading during the GDC exposure. Our results show the effect on the H_2 sorption is minimal (and biased toward increased pumping speed) following GDC exposure; the effect on hydrogenic loading is less significant than the equivalent exposure to thermal H_2. In the following sections of the paper the details of the experimental apparatus (section II) and the results (section III) are presented.

II. EXPERIMENTAL APPARATUS

A schematic diagram of the apparatus used for the experimental measurements is shown in Fig. 1. A Zr/Al test fixture was constructed on a 20 cm ID Conflat flange with a 15 cm segment of a fan-folded constantan strip coated with 25 g of Zr/Al (16%) alloy. The getter strip was shielded on three sides with a stainless steel heat-shield. The getter element is approximately 1/3 of the usual getter material supplied in a standard getter module (WP 1250/2) which has a manufacturer's quoted pumping speed of 1250 ℓ/s (unshielded) for H_2 following activation. The test flange contained two high current (150 A) feedthroughs

connected in series with the constantan strip for heating and regeneration of the getter material. The test flange was mounted in a 107 liter, stainless steel test chamber, which is pumped by a nominal 500 ℓ/s turbomolecular pump and is instrumented for precision gas flow, total pressure, and partial pressure measurements. (See Fig. 1 caption for details.) Not shown in Fig. 1 is an infrared camera system (IRCON 300C) which viewed the Zr/Al getter strip through a glass viewport and enabled real-time surface temperature measurements over the range 90 C - 800 C, after correction for the Zr/Al emissivity and transmission of the viewport.

A hydrogen glow discharge is produced in the test chamber by filling the chamber with H_2 to a pressure of 5-60 mT and biasing a stainless steel anode (25 cm^2 in area) at +400 V. The test chamber walls are grounded. During the GDC procedure the Zr/Al test strip was either left floating or grounded, and the floating potential or received current was monitored accordingly. For all the GDC exposures reported in this paper, the H_2 pressure was 30 mT, the discharge current was 0.3 A, and the discharge duration per exposure was 1 hour. For these conditions, the average ion current to the test chamber walls was ~30 $\mu A\ cm^{-2}$ and the total fluence was $\sim 5 \cdot 10^{17}\ cm^{-2}$. This dose approximates the equivalent dose for the first twenty hour conditioning period used in the PDX GDC experiments.[5]

The performance of the Zr/Al test pump was characterized before and after application of the glow discharge by: (1) hydrogen pumping speed measurements as a function of Zr/Al temperature

and (2) thermal desorption measurements of the total released hydrogen and possible impurity residual gases (H_2O, CO). The pumping speed measurements were performed at temperature equilibrium by measuring equilibrium pressures for hydrogen influx rates established over the range of (0.6-4.5) × 10^{-2} Torr-ℓ/s. The total quantity of H_2 introduced during the pumping speed measurements (<0.2 Torr-ℓ/g) was considerably less than the sorption capacity (~20 Torr-ℓ/g). The pumping speeds were determined to be constant over the pressure regime investigated (3 × 10^{-6} - 5 × 10^{-4} Torr). The thermal desorption measurements were performed by instantaneously raising the constantan heating current to the maximum needed (55 A) for reaching regeneration temperatures (~700 C) and recording the maximum total pressure rises for H_2, H_2O, and CO.

III. RESULTS

The performance of the Zr/Al getter pump is summarized in Fig. 2 where the temperature dependence of the H_2 pumping speed is plotted during various stages of the experiment.

Curve (a) shows the pumping speed of the pump after it had been previously partially saturated with H_2 (total loading ~ 30 Torr-ℓ); curve (b) shows the pumping speed measurement immediately following a 40 minute activation period at 700 C. Curves (c) and (d) show pumping speed measurements that were performed following similar activation cycles, but in these cases the measurements were preceded with 1 hour exposures to H_2 GDC with the Zr/Al pump electrically floating [curve (c)] and grounded [curve (d)] to the test chamber. Finally, the pumping speed was measured

following activation and exposure of the getter pump to the H_2 pressure conditions (30 mT for 1 hour) used for the GDC exposures [curve (e)].

The effect of the GDC is not deleterious to the pumping characteristics of the getter; in fact, a not insignificant (+20%) improvement in pumping speed is observed after GDC exposure and outgassing. The improvement is most likely due to a partial removal of the surface carbon and oxygen from the Zr/Al alloy which would aid the surface adsorption kinetics.

From the slope of the family of curves in Fig. 2 an experimental activation energy, E_a, for the rate-limiting step in the H_2 sorption process can be derived. The result, $E_a = 0.032 \pm 0.008$ eV is somewhat smaller than the activation energies measured by Barosi[7] for H_2 sorption in single-phase Zr/Al alloys (0.07-0.2 eV), and is considerably smaller than the measured activation energies (0.8 eV) for H_2 sorption in pure Zr.[8] The small absolute value of this activation energy accounts for the significant thermal activation of the pumping process near room temperature.

An additional check of the surface activity and desorption kinetics of the getter pumps was made by measurements of thermal desorption mass spectra before and after GDC exposure. Figure 3 shows a typical H_2 desorption spectrum over the temperature range 300-700 C following exposure to 2 Torr-s of H_2.

No significant difference was seen in such spectra measured before or after exposure of the getter pump to GDC. Hence, no significant change in desorption kinetics was affected. Also

shown on Fig. 3 is the response of the mass spectrometer to desorbing 18 amu (H_2O) and 28 amu (CO) signals. The signals of the latter two residual gases should be considered upper limits for the desorption from the getter since signals of equal magnitude can be produced in the mass spectrometer ion source by introducing H_2 pressures ($\sim 10^{-5}$ Torr) equivalent to the ambient H_2 pressure during getter desorption. Considering the enthalpies of formation of ZrC and Al_2O_3 (which are the probable compounds[9] for adsorbed C and O), there is no reason to expect volatile C or O species desorbing from the getter at temperatures of 700 C or below.

Thermal desorption measurements were also made to quantify the magnitude of the hydrogen sorption during GDC exposure. Table 1 compares the total quantity of H_2 desorbed from the getter after 300 s of heating, for two GDC exposures, and for one exposure to the equivalent time and pressure of thermal H_2 (30 mT for 1 hour). The Zr/Al was activated and then cooled to room temperature prior to the exposures. The hierarachy observed in Table 1, where thermal exposures yield greater H_2 loading than GDC exposures, and grounded GDC exposures yield greater H_2 loading than floating exposures, was consistently observed in successive experimental runs. It is expected that the getter will sorb more hydrogen during GDC when it is grounded because the ion flux is greater. The increased sorption during thermal exposures compared to GDC exposures may be related to increased atomic hydrogen association rates on the getter surface[10] during GDC which would decrease the surface

concentration of atomic hydrogen and net hydrogenic sorption. The exposure to thermal H_2 yields a total sorption which is uncomfortably close to the embrittlement limit. The margin of difference evident in the GDC exposures (especially when the getter is left floating) means that repetitive GDC exposures (or longer GDC exposures) should not be injurious to the getter performance.

ACKNOWLEDGMENTS

The authors wish to acknowledge S. A. Cohen for helpful discussions on the subject of this study and thank T. Provost and M. Egan for technical support. This work was supported by U. S. Department of Energy Contract No. DE-AC02-76-CHO3073.

REFERENCES

[1]The Zr/Al alloy is manufactured by S.A.E.S. Getters S.p.A., Milan, Italy, under the tradename St 101.

[2]H. F. Dylla, J. Nucl. Mater. 94&95 (1980).

[3]H. Eubank et al., in Plasma Physics and Controlled Nuclear Fusion Research (Proc. 7th Int. Conf. Innsbruck, 1978) Vol. 1, IAEA, Vienna (1979) 11.

[4]J. C. Hosea et al., in Ninth European Conference on Controlled Fusion and Plasma Physics (Oxford, Sept. 1979).

[5]H. F. Dylla, S. A. Cohen, S. M. Rossnagel, G. M. McCracken, and Ph. Staib, J. Vac. Sci. Technol. 17 (1980) 286.

[6]W. Poschenrieder, G. Staudenmaier, and Ph. Staib, J. Nucl. Mater. 94&95 (1980).

[7]A. Barosi in Residual Gases in Electron Tubes, T. A. Giorgi and P. della Porta, (Eds.) (Academic, N.Y., 1972). pp 221-236.

[8]M. Nagasaka and T. Yamashina, Japan. J. Appl. Phys. Suppl. 2, P+1 (1974) 61-64.

[9]C. Wu, R. L. Moore, S. A. Cohen, J. Vac. Sci. Technol. (to be published).

[10]F. Waelbroek, K. J. Dietz, I. Ali-Khan, H. Merkens, P. Wienhold, and J. Winter, J. Nucl. Mater. 94&95 (1980).

TABLE 1: Comparison of H_2 sorption by the Zr/Al Getter during GDC and equivalent H_2 exposures.

Exposure	Total Desorption after 300 s	Getter Temperature at 300 s
1 hour GDC (Zr/Al floating)	0.9 Torr-ℓ/g	612°C
1 hour GDC (Zr/Al grounded)	3.4 Torr-ℓ/g	563°C
1 hour H_2, 30 mT	12.0 Torr-ℓ/g	585°C
embrittlement limit	20.0 Torr-ℓ/g	

FIGURE CAPTIONS

Fig. 1. Schematic diagram of the experimental apparatus. A test fixture containing the Zr/Al getter is mounted on a 107 liter test chamber pumped by a nominal 500 ℓ/s turbomolecular pump. Measured net speed for $H_2 = 300$ ℓ/s. H_2 influx rates could be controlled with a piezoelectric valve (Veeco PV-10) and monitored by measurement of the absolute pressure difference across a molecular flow orifice (MKS FE-1.0). Total pressure measurements are made using (1) a nude Bayard-Alpert gauge (BAG) mounted within the test chamber for transient measurements (P_3), (2) a tubulated BAG (P_2), and (3) a capacitance manometer (P_1, MKS-310). Partial pressure measurements are made with a quadrupole residual gas analyzer (RGA) which is connected to the te - chamber through (V_2) a high conductance (50 ℓ/s) or (V_1) low conductance (10^{-3}) orifice. All pressure measurements are calibrated against the capacitance manometer. A glow discharge can be sustained in the test chamber by biasing an anode introduced within the main volume while grounding all other test chamber components.

Fig. 2. Steady-state H_2 pumping speeds for the Zr/Al getter pump as a function of the inverse getter temperature. Pumping speeds were measured with the pump partially saturated with H_2 (a); after activation (b); following exposure to GDC with the pump floating (c); grounded (d);

and after activation following exposure of the pump to 10^2 Torr-s of H_2 (e).

Fig. 3. Thermal desorption of H_2 during temperature cycling of the Zr/Al getter from 400 C to 700 C following exposure to 2 Torr-s of H_2. Also shown is the behavior of H_2O and CO partial pressures during the temperature excursion. No change is observed in the P_{CO}, with a minimum detectable partial pressure of $\sim 4 \times 10^{-8}$ Torr; the observed change in P_{H_2O} can be entirely accounted for by the interaction of H_2 in the RGA ion source.

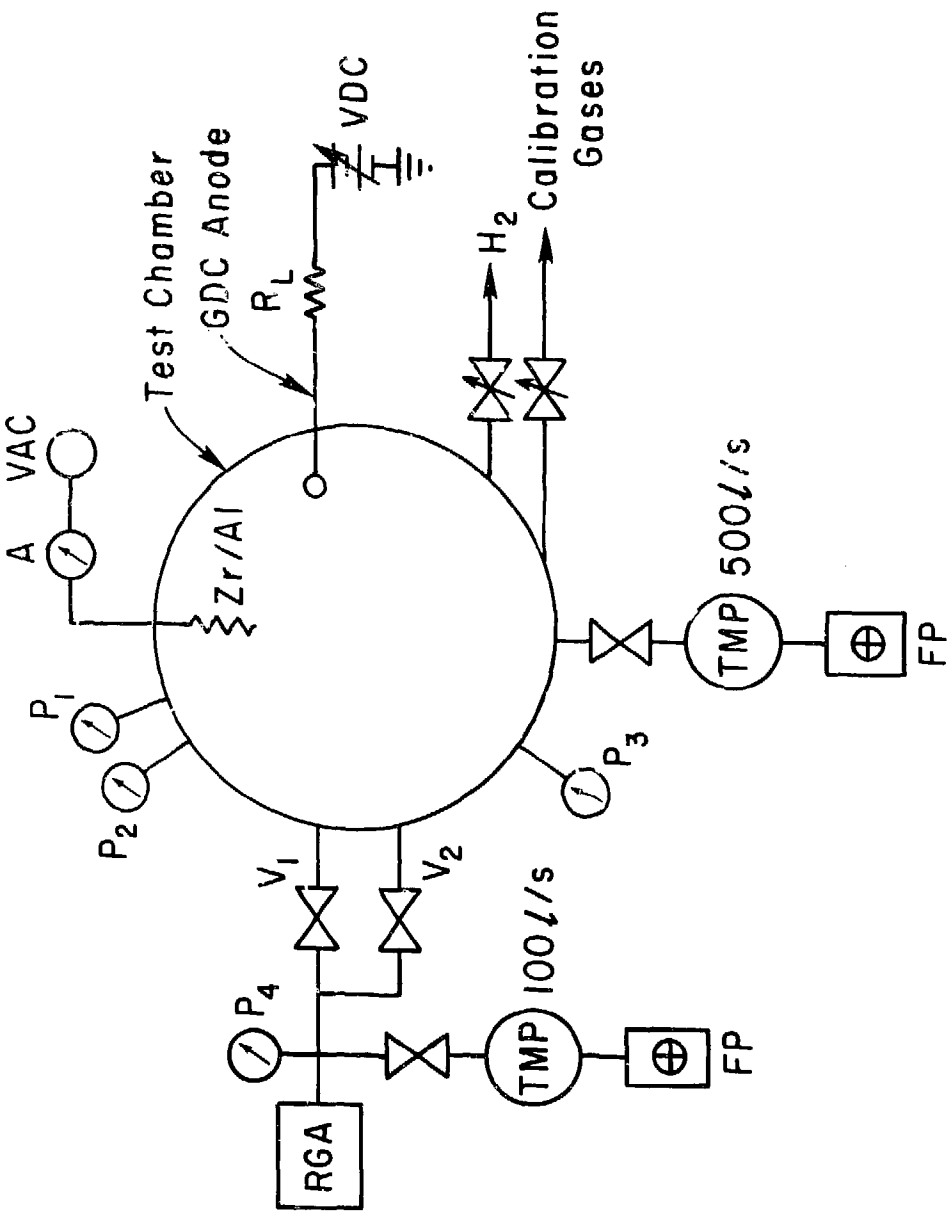
VAC
A
Test Chamber
GDC Anode
Zr/Al
R_L
VDC
H_2
Calibration Gases
P_1
P_2
P_3
P_4
V_1
V_2
TMP
500 ℓ/s
TMP
100 ℓ/s
FP
FP
RGA

Fig. 1

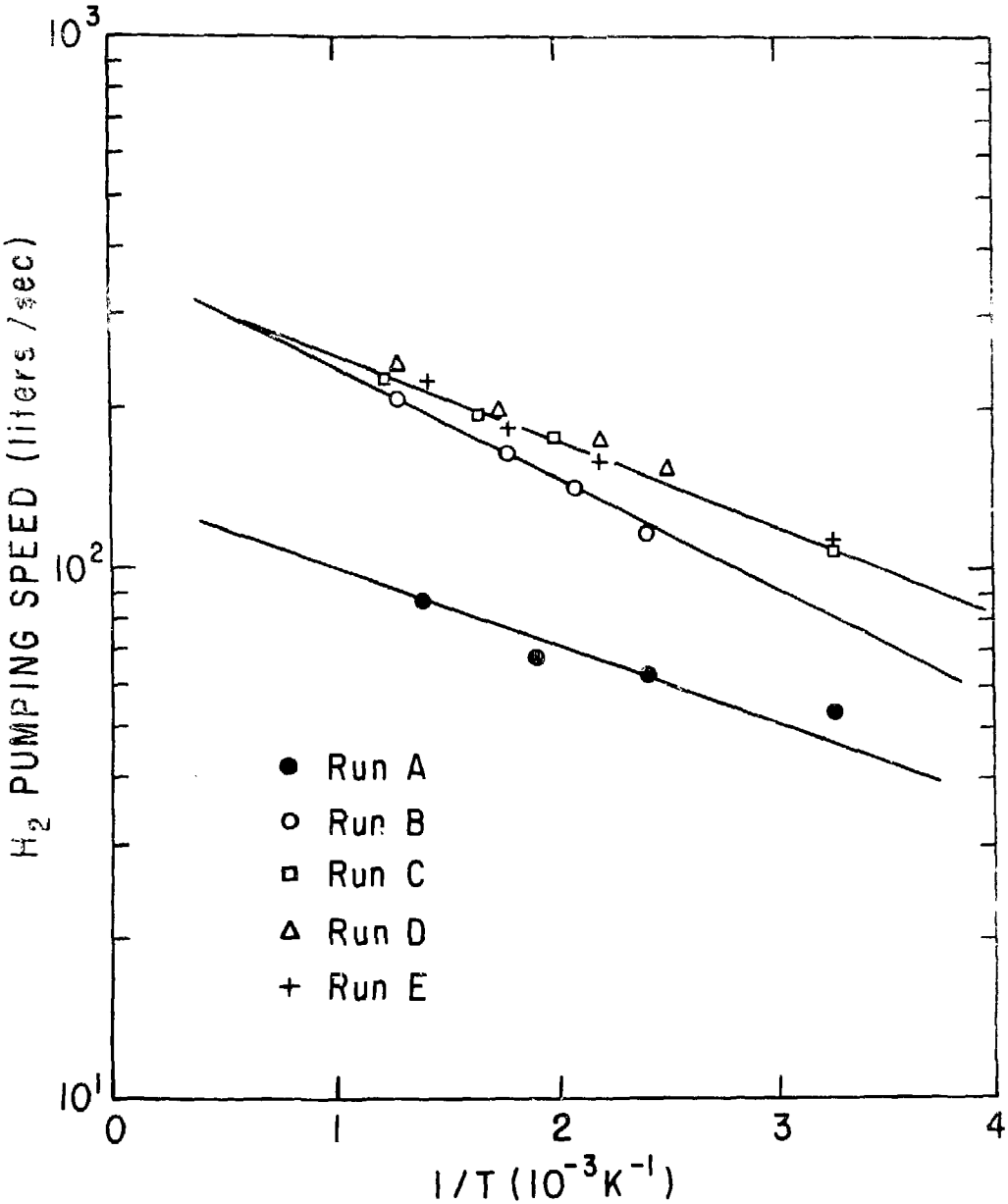
10^3
10^2
10^1
H_2 PUMPING SPEED (liters/sec)
0
1
2
3
4
$1/T\ (10^{-3}K^{-1})$
Run A
Run B
Run C
Run D
Run E

Fig. 2

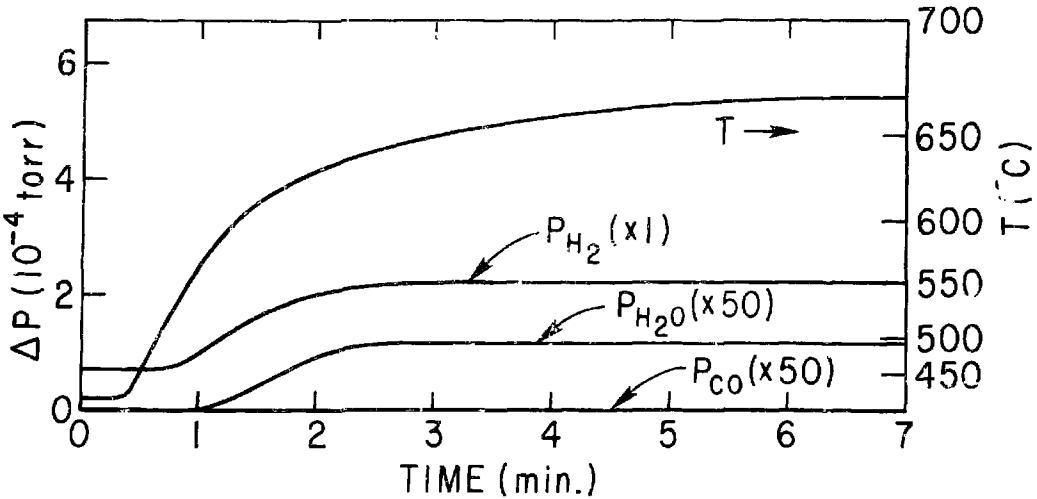
700
650
600
550
500
450
T (°C)
T →
P_{H_2} (x1)
P_{H_2O} (x50)
P_{CO} (x50)
6
4
2
0
ΔP (10^{-4} torr)
0
1
2
3
4
5
6
7
TIME (min.)

Fig. 3