CONF-780925--2

MASTER

PREPRINT UCRL-81364

Lawrence Livermore Laboratory

PLASMA SHUTTER FOR HIGH POWER GLASS LASER

L. P. BRADLEY AND PETER KOERT

AUGUST 3, 1978

This paper was prepared for submission to the 8th International Symposium on Discharges and Electrical Insulation in Vacuum
Albuquerque, New Mexico, September 5-7, 1978

This is a preprint of a paper intended for publication in a journal or proceedings. Since changes may be made before publication, this preprint is made available with the understanding that it will not be cited or reproduced without the permission of the author.

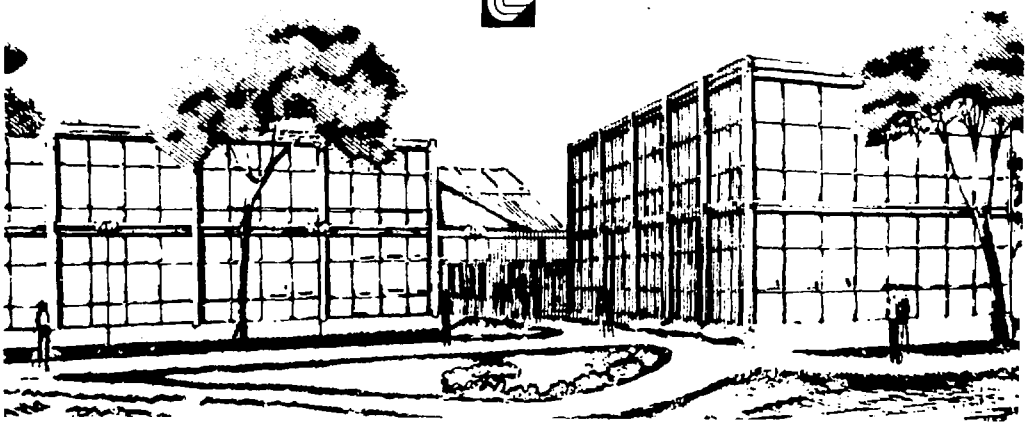

DISTRIBUTION OF THIS DOCUMENT IS UNLIMITED

PLASMA SHUTTER FOR HIGH POWER GLASS LASER*

L.P. Bradley and Peter Koert
Lawrence Livermore Laboratory
University of California
P.O. Box 5508
Livermore, California 94550

ABSTRACT

We are investigating a retropulse shutter to protect fusion lasers from target reflected light. It is required to project a plasma of $10^{21}/cm^3$ across a vacuum spatial filter pinhole with a velocity of at least 2 cm/μs. The plasma is produced from a foil which is resistively heated to sublimation, superheated, and magentically driven across the optical beam path. This paper describes these plasma production processes A technique has been developed to couple the drive circuit to the foil to enhance the plasma velocity. A nozzle controls the solid angle into which the plasma is projected. Using diagnostics of circuit monitors, witness plates, Faraday cups, streak camera, and probe lasers, we determine the space-time evolution of the plasma. Using a self consistent numerical model, we analyze the plasma behavior. With these methods, we correlate and contrast data and numerical results for two specific cases in which the foil sublimes at or well before the current maximum.

NOTICE
This report was prepared as an account of work sponsored by the United States Government. Neither the United States nor the United States Department of Energy, nor any of their employees, nor any of their contractors, subcontractors, or their employees, makes any warranty, express or implied, or assumes any legal liability or responsibility for the accuracy, completeness or usefulness of any information, apparatus, product or process disclosed, or represents that its use would not infringe privately owned rights.

*Work performed under the auspices of the U.S. Department of Energy by the Lawrence Livermore Laboratory under contract number W-7405-ENG-48.

DISTRIBUTION OF THIS DOCUMENT IS UNLIMITED

PLASMA SHUTTERS FOR A HIGH POWER GLASS LASER*

L.P. Bradley and Peter Koert

Lawrence Livermore Laboratory
University of California
P.O. Box 5508
Livermore, California 94550

INTRODUCTION

An essential element in a fusion laser system is the use of a device designed to minimize light retroreflected from the target. The only two schemes previously used with glass lasers are a Faraday rotator/polarizer and an exploding mirror. The Faraday rotator/polarizer combination is reliable, but adds to the non-linear phase contributions, and is expensive. A feasible alternative candidate is an inline plasma shutter.

The logical location for a fast plasma shutter is contiguous to the final spatial filter pinhole.[1] Assuming a pinhole aperture of 1 mm and distance to the target of 50 ft., the pinhole must close with an average velocity of 1 cm/μs. Since the critical density for 1.06 μm light is $10^{21}/cm^3$ the shutter plasma must have this or larger density.

Of the several candidate techniques for producing the required opaque plasma, most fall into a class which is based upon the rapidly-induced sublimation of solid material. This rapidly-induced sublimation may be used directly as a plasma shutter, or it may drive a solid projectile[2] (flyer or spall) across the optical beam path. The rapid sublimation may be produced by the resistive heating of a foil or by laser vaporization of a surface. We describe here a particular shutter that uses the electrical sublimation

of a thin metal foil or wire.

After describing the geometry of the experiment and summarizing the primary physical processes involved, we present particular experimental data.

Experimental Configuration

The experiment was contained in a multiport vacuum chamber that had been retrofitted into a Shiva γ-δ spatial filter[1] and had f-10 optics, as shown in Figure 1. An alternative set of f-1.5, 20 cm aperture lenses were used for most of the experiments described here. The wire was located in the center of the chamber, near the focal point of the optics, as shown in more detail in Figure 2.

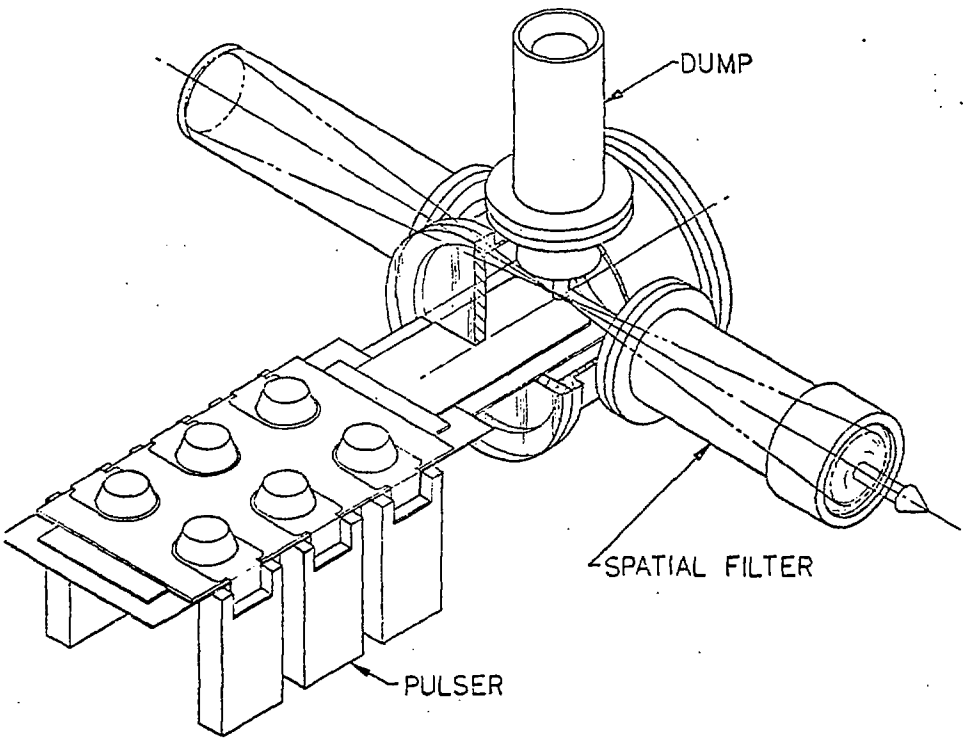

Figure 1: Experimental configuration showing interconnection of vacuum chamber and pulser.

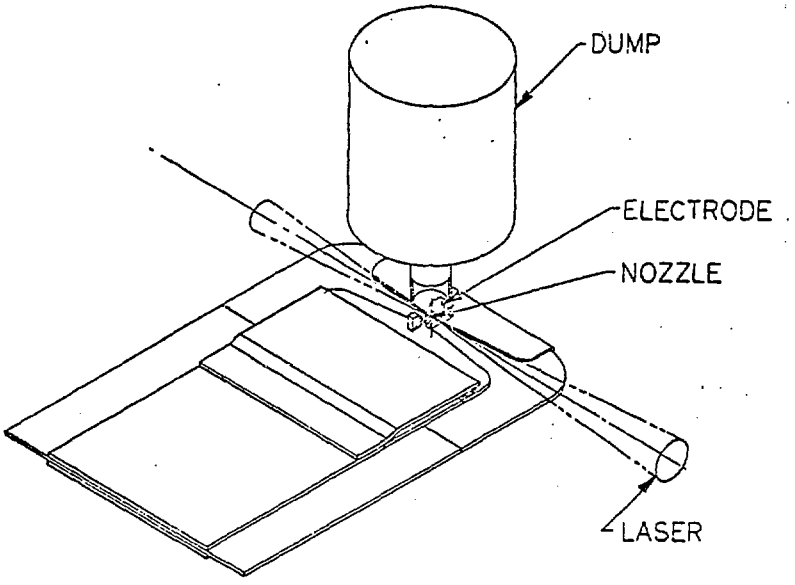

Figure 2: Detailed view of electrode-nozzle region from Figure 1.

The 3 mm long, 127 μm diameter aluminum wire was located between two electrodes in a 1 mm deep, 150 μm wide slot in dielectric material. This slot constituted a nozzle to confine the plasma during heating and to direct it across the optical beam path into a dump tank. Such a geometry increased the density at the focal region of the laser as contrasted with a freely expanding plasma, and also reduced the amount of vapor escaping toward the spatial filter optics.

The wire electrodes were connected via a low inductance parallel plate transmission line to the pulser. The pulser, contained 6 parallel Maxwell 0.22 μf capacitors connected to the transmission line by 6 independent switches as shown in Figure 1, and more detail in Figure 3. The switches were midplane triggered, UV illuminated pressurized air spark gaps[3] which we retrofitted into Tachisto 501 switch bodies. As configured the pulser could be charged to 50 kV and provided a current rising at 5×10^{12} a/sec.

These spark gaps, when triggered with a fast trigger pulse provided nanosecond jitter and hence excellent current sharing of the parallel gaps and synchronization with the laser and diagnostics. When connected to the foil, including all inductances the current had a quarter period of 300 ns.

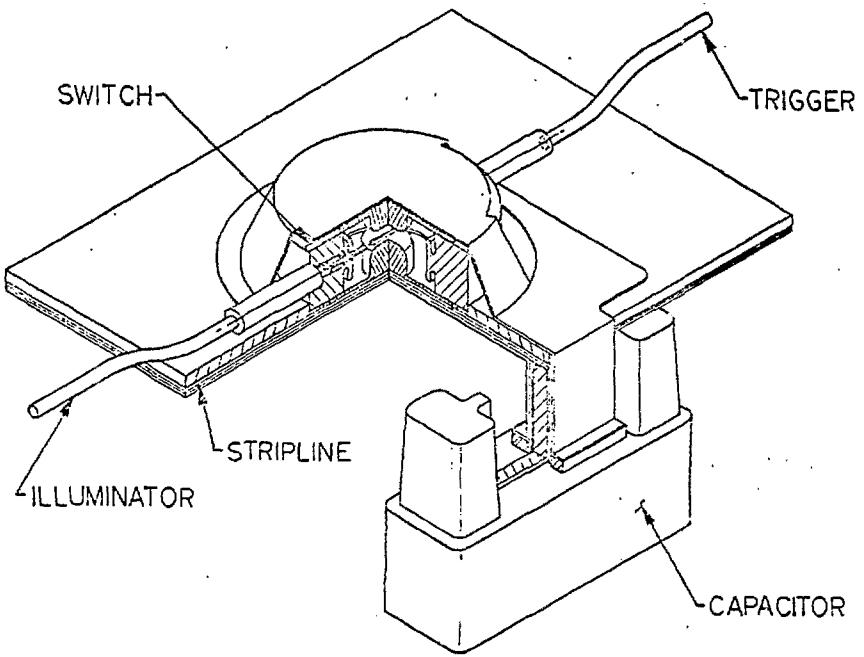

Figure 3: Cross section of switch, capacitor, and transmission line.

Electrical circuit monitors recorded the charge voltage of the capacitors and the current and voltage near the foil Witness plates of glass and/or metal were used to collect the vapor and thereby permit us to estimate the angular distribution of the emitted plasma.

A Faraday cup was constructed from a disk connected to a BNC connector and had a negative bias of 300 volts applied to the disk. It was coaxially contained in a grounded metal cylinder with two axial pinholes of 250 μm diameter located at 1 cm intervals between the Faraday collector and the plasma source. Separate pumpout ports eliminated residual air from this

assembly.

Plasma front velocity was recorded with a TRW streak camera focused along the optical axis and with the slit oriented parallel to the plasma expansion axis.

A CW YAG probe laser with a 100 Å narrow band filter and UV blocking filter was used with an EG&G SGD-100A photodiode to monitor shutter action. The photodiode was biased at 100 V for 1 μs during the period of interest.

Model

We have developed a self consistant Lagrangian numerical program[4] to model the pre and post burst features of an exploding foil. This formulation included the driving circuit parameters and magneto hydrodynamic effects. It provided the evolution of the plasma density and temperature.

This description is presently one dimensional and provides the essential features of the plasma behaviour. The program has been invaluable in extrapolating from an initial experimental configuration to the present one and in guiding the interpretation of the data. We cannot overemphasize the utility of such a fast running program in selecting the pulser circuit and wire dimensions to achieve a specific operating point, particularly in view of the nonlinear interactions involved which otherwise would make scaling difficult.

Results

Measurements with witness plates located at 2 cm from the wire show that the plasma expands into a wedge of no greater than 20° half angle and that no easily detectable vapor escapes toward the optics. We are presently refining these measurements to provide better angular resolution and to detect very small quantities of vapor that might escape toward the lenses.

Selecting representative data at 20 kV charge voltage and based upon

the program, the foil resistance is shown in Figure 4, for a quarter period of the current 300 ns. This resistance agreed with the voltage and current measurements. The predicted plasma temperature is shown in Figure 5.

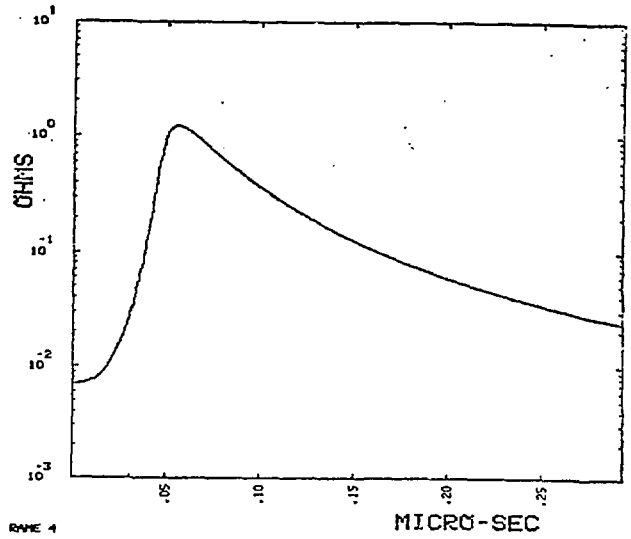

Figure 4: Calculated resistance of wire as a function of time.

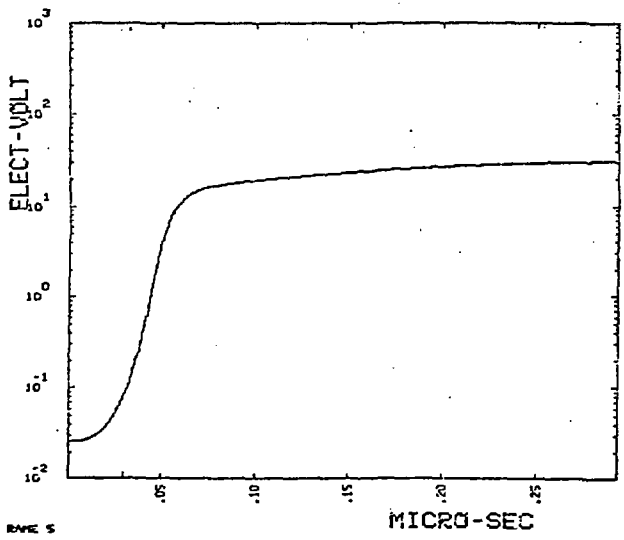

Figure 5: Plasma temperature as a function of time.

Based on these data, we observe that the wire and subsequent plasma heating occurred primarily during a short period of high resistivity and achieved a mean velocity of 2 cm/μs which can be attributed primarily to resistive heating. During this period, the plasma had expanded to the exit of the nozzle.

Since the current was still rising toward its maximum value, after a slight dip associated with the wire burst, the heating phase was followed by a magnetic propulsion phase during which the plasma continue to accelerate to higher than thermal velocity. For the 20 kV charge voltage, this increased the plasma mean velocity to 2.4 cm/μs. The two phases are not entirely distinct, but have been more clearly distinguished on other experimental and numerical runs with different wire diameters and/or charge voltages.

The displacement of the center of gravity of the expanding plasma is shown in Figure 6 as calculated with the program. The plasma achieved a

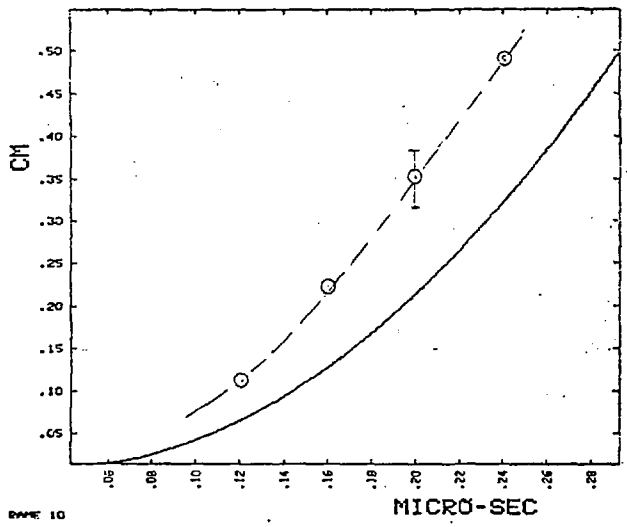

Figure 6: Solid curve shows a calculated plasma mean velocity as a function of time. Dotted curve represents plasma front velocity as recorded by the streak camera.

final velocity of 2.4 cm/μs. Using the Faraday cup located 10 cm from the wire, we recorded a final mean expansion velocity of 2.2 cm/μs.

The expanding plasma front as recorded by the streak camera is also shown in Figure 6. Since we do not yet know accurately what density profile of the plasma front is recorded by the streak camera, we cannot uniquely correlate it with the program or Faraday cup results. However, since this plasma front profile commences with the predicted profile and has the same general shape as the mean predicted plasma velocity, we conclude that it is consistent with these data.

We estimate the plasma density in the region of the laser beam (0.25 cm from the initial wire position) by assuming that all the initial wire material is vaporized and by bounding the volume of the expanding plasma with dimensions ascertained from the measured data. The axial length of the plasma is unfolded from the Faraday cup reading. One transverse dimension is determined from the measured divergence, and the other transverse dimension is fixed by the electrodes. On this basis, the particle density projected into the laser beam path is slightly greater then $10^{21}/cm^3$. The plasma or electron density can be appreciably higher depending on the degree of ionization at that location.

Another Case

As an aside and in way of retrospect, an initial experiment[5] was designed to burst the foil at the current maxima. The wire dimensions were similar to those described above. However, we determined that the foil was only slightly superheated providing a mean plasma velocity of 0.7 cm/μs.

The initial experiment did demonstrate that a plasma shutter would block a laser beam in the required timescale and a probe laser trace is shown in Figure 7.

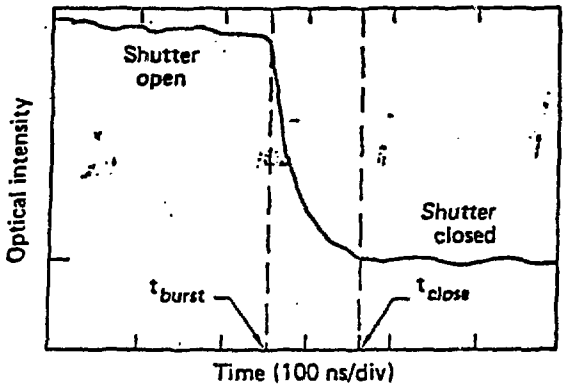

Figure 7: Measured optical shutter action of the plasma shutter as monitored by a CW/YAG probe laser and photodiode.

This early experiment, however, did not have a nozzle and did contaminate the optics. We were, therefore, lead to incorporate the nozzle and use a higher plasma velocity to close the shutter in the required time.

Conclusions

We have examined the burst and expansion of a wire. The wire is located in a slot which functions to initially contain the plasma during heating and subsequently direct it into a narrow solid angle.

The wire is driven by a rapidly rising current which is required to superheat the plasma significantly above its sublimation temperature. The continually rising current magnetically propels the plasma to a higher final directed velocity than that attributed to heating alone.

The operating point in this experiment was dictated by our application for a shutter. For this operating point the plasma is projected into a wedge with mean angle of less than 20° and with a final mean velocity of 2.2 cm/μs as recorded with a Faraday cup. This result is in good agreement with numerical model predictions and streak camera measurements.

The important feature of this work relevant to our application is that we have produced a plasma with a density of > $10^{21}/cm^3$ and a directed mean velocity of > 2 cm/μs.

Acknowledgement

We thank E. Orham and R. Beaman for their help with running the experiments.

References

1. LLL Laser Program Annual Report, p. 169, UCRL 50021-74 and p. 2-79, UCRL 50021-76.

2. R.C. Weingart, R.J. Lee, R.K. Jackson, and N.L. Parker, Proc. Sixth Symposium on Detonation, (Office of Naval Research, White Oak, Md.).

3. H. Bacchi and J.C. Pauwek, p. 489, Proc. of the 9th Int. Conference on High Speed Photography, Denver, Aug. 2-7, 1970.

4. Peter Koert, UCRL 81363, 1978 (to be published).

5. L.P. Bradley, W.L. Gagnon, and B.M. Carder, p. 1666, Proc. of the 7th Symposium on Engineering Problems in Fusion Research, Knoxville, Oct. 25-28, 1977.

Reference to a company or product name does not imply approval or recommendation of the product by the University of California or the U.S. Department of Energy to the exclusion of others that may be suitable.

NOTICE

"This report was prepared as an account of work sponsored by the United States Government. Neither the United States nor the United States Department of Energy, nor any of their employees, nor any of their contractors, subcontractors, or their employees, makes any warranty, express or implied, or assumes any legal liability or responsibility for the accuracy, completeness or usefulness of any information, apparatus, product or process disclosed, or represents that its use would not infringe privately-owned rights."