High-Reliability Gas Turbine Combined-Cycle Development Program: Phase I
Volume 2

AP-1681, Volume 2
Research Project 1187-3

Final Report, January 1981

Prepared by

GENERAL ELECTRIC COMPANY
Gas Turbine Division
1 River Road, Building 56-300
Schenectady, New York 12345

Principal Investigator
R. G. Kunkel, Program Manager

Prepared for

Electric Power Research Institute
3412 Hillview Avenue
Palo Alto, California 94304

EPRI Project Manager
R. L. Duncan

Power Generation Program
Advanced Power Systems Division

DISTRIBUTION ... UNLIMITED

DISCLAIMER

This report was prepared as an account of work sponsored by an agency of the United States Government. Neither the United States Government nor any agency thereof, nor any of their employees, makes any warranty, express or implied, or assumes any legal liability or responsibility for the accuracy, completeness, or usefulness of any information, apparatus, product, or process disclosed, or represents that its use would not infringe privately owned rights. Reference herein to any specific commercial product, process, or service by trade name, trademark, manufacturer, or otherwise does not necessarily constitute or imply its endorsement, recommendation, or favoring by the United States Government or any agency thereof. The views and opinions of authors expressed herein do not necessarily state or reflect those of the United States Government or any agency thereof.

DISCLAIMER

Portions of this document may be illegible in electronic image products. Images are produced from the best available original document.

ORDERING INFORMATION

Requests for copies of this report should be directed to Research Reports Center (RRC), Box 50490, Palo Alto, CA 94303, (415) 965-4081. There is no charge for reports requested by EPRI member utilities and affiliates, contributing nonmembers, U.S. utility associations, U.S. government agencies (federal, state, and local), media, and foreign organizations with which EPRI has an information exchange agreement. On request, RRC will send a catalog of EPRI reports.

EPRI authorizes the reproduction and distribution of all or any portion of this report and the preparation of any derivative work based on this report, in each case on the condition that any such reproduction, distribution, and preparation shall acknowledge this report and EPRI as the source.

NOTICE

This report was prepared by the organization(s) named below as an account of work sponsored by the Electric Power Research Institute, Inc. (EPRI). Neither EPRI, members of EPRI, the organization(s) named below, nor any person acting on their behalf: (a) makes any warranty or representation, express or implied, with respect to the accuracy, completeness, or usefulness of the information contained in this report, or that the use of any information, apparatus, method, or process disclosed in this report may not infringe privately owned rights; or (b) assumes any liabilities with respect to the use of, or for damages resulting from the use of, any information, apparatus, method, or process disclosed in this report.

Prepared by
General Electric Company
Schenectady, New York

ABSTRACT

The Electric Power Research Institute (EPRI) sponsored the High Reliability Gas Turbine Combined Cycle Development Program to develop a gas turbine design with sufficient reliability to be considered for baseload service in a combined-cycle plant. The objective of this program is to generate a new conceptual centerline design for gas turbine and accessories, with reliability as the key parameter. Tradeoff studies of reliability versus cost, performance, firing temperature and other parameters formed the basis for all major design approaches and decisions. This program results in the conceptual design of a gas turbine combined-cycle plant with (a) high reliability and performance to warrant consideration for baseload service, (b) fuels flexibility for distillate and residual fuels, (c) turbine emissions which meet the more stringent New Source Performance Standards, (d) identified conversion requirements for coal-derived fuels and peaking/mid-range duty cycles, and (e) identified list of potential present product retrofits. This conceptual combined-cycle design is planned, by EPRI, to be a commerical offering by the mid 80's. As such, it is a near-term machine configuration with state-of-the art engineering.

The program was conducted in two major segments: 1) Task 1 and 2, field data evaluations and reliability tradeoffs, followed by an evaluation of the results with EPRI to develop recommendations for the new centerline design; 2) continuation of Tasks 3, 4, 5 & 6, which are, plant design evaluations, needed reliability programs, coal-derived fuel modifications, and present plant retrofits.

The inherent reliability, as defined by field data, was used as a basis from which to predict the expected reliability and power cost of a variety of near term conceptual gas turbine hardware and cycle configurations. The results indicated that the highest reliability, the lowest power cost, and greatest fuels flexibility may not be found within one configuration. In this program, the configuration selection criteria was based upon the highest reliabilty and fuel flexibility. This directed the choice to a near-term combined-cycle gas turbine plant firing at 1985°F (1085°C) and a pressure ratio of 12:1. This criteria was established upon the understood utility need that a plant operating baseload reliably with a heat rate of approximately 8000 Btu/kWh and running is more desirable than a lower heat rate plant derived from advanced cycles and higher firing temperature equipment. This is because the advanced cycle equipment may experience low reliability during the developmental years prior to reaching maturity.

Consequently, the new gas turbine for this program was conceptually developed around the 1985°F (1085°C) firing temperature cycle. The total plant was developed using maintainability, serviceability and the potential need for conversion to coal-derived fuels and other duty cycles. The controls and accessories were found to provide cost effective changes and modifications.

EPRI PERSPECTIVE

PROJECT DESCRIPTION

This final report of Phase I of RP1187, High-Reliability Gas Turbine Combined-Cycle Development, presents the results of a study conducted by General Electric Company, one of three contractors that conducted studies in Phase I. The other two contractors were Westinghouse Electric Corporation and United Technologies Corporation. The basic study was to determine the potential reliability of a combined-cycle plant using a "new centerline" design approach with the main design parameter being reliability rather than performance.

The project was outlined in seven phases from conceptual design to engine endurance testing. The specific phases are:

- Phase I: Conceptual designs--to produce innovative ideas around a new centerline design for equipment that employs the latest state-of-the-art technical data in a total plant
- Phase II: Preliminary design--to investigate in greater depth the more promising configurations uncovered in Phase I and to determine feasibility and comparative values in a closer look at system concepts
- Phase III: After a review and selective process has developed one or two models as the most beneficial plant configurations--to produce detailed designs of the plant components requiring full development and integration
- Phase IV: The fabrication activity--to manufacture, as needed, the components selected for the technology verification project
- Phase V: Test of technology verification model--consists of performance and technical test of breadboard-type models at the manufacturer's plant or special test sites
- Phase VI: The fabrication, delivery, and installation of the prototype plant--in preparation for the field test (Phase VII)
- Phase VII: Test of the prototype plant model at a host utility site for sufficient duration to establish the inherent reliability of the total system (total running approaching 10,000 hours)

Only Phase I and Phase II have been approved by EPRI. The design change efforts were to be mainly on the combustion-turbine system. Redundancy, where feasible, was to be used for equipment other than the combustion-turbine units to meet the goals. The three contractors took varying positions regarding the new centerline approach. In the case of General Electric, they based their work on a redesign of

their present market offerings of the MS7000 rather than a complete new centerline design. The MS7000 is near the 75-MW-size industrial engine that was near the nominal size and type asked for by the EPRI request for proposal.

PROJECT OBJECTIVES

The major objective of the study was to determine through conceptual design methods the maximum feasible potential reliability of a gas turbine and a combined cycle for coal-derived fuels, both gas and liquid. A secondary objective was to define the research projects and technical data necessary to improve the present market offering of gas turbines to meet the goals as specified by EPRI. A third objective was to obtain the reliability performance of present-day installations of combined cycles.

The main goals at the outset were specified by EPRI and had the following values:

Availability	
Gas turbine unit	95%
Total plant	90%
Starting reliability	99%
Mean time between shutdowns	9000 hours
Maintenance costs	
Gas turbine unit	1 mill/kWh
Total plant	2 mills/kWh

PROJECT RESULTS

The results of the General Electric study indicated that the availability goals could be met at all levels of equipment, from the combustion-turbine unit to the total plant, but that mean-time-between-failures (MTBF) goals could only partially be met. The combustion-turbine unit alone could approximately meet the MTBF goal (9000 hours), while the combustion-turbine system could only reach an MTBF of about 1000 hours. When the steam cycle and its electric generator, associated equipment, and balance-of-plant items were added, the total plant MTBF was predicted to be no greater than roughly 500 hours.

Overall plant improvements could possibly call for technology support projects in order to meet the Phase II goals. The three contractors compiled R&D programs in Task 4 to define these technology support projects. However, it was not possible to delineate the specific projects by their potential contribution to the

reliability improvements. For this reason the projects were outlined in fairly general and broad categories.

The field-data analyses indicated that the number of forced outages in the combustion-turbine system were caused mainly by the ancillary equipment, while the major contributor to the number of forced outage hours was the combustion turbine. Although some of the combustion turbines perform well, they offer the greatest potential for improvement. Accessories such as the control system and the fuel system also offer a great potential for improving the reliability performance.

At the start of the program it was hoped that Task 1, field-data analysis, and Task 2, reliability trade-off analysis, would result in a clear picture of the desired changes and their contribution to improved reliability. However, the field data were not specific enough, and the analytic effort contained sufficient compromises, so that a sharp list of reliability-improving changes was not feasible. It was feasible, however, to determine some beneficial design parameters and to arrive at a design with a significant improvement in reliability. Some of these steps include the application of redundancy and improvement in accessories such as controls and instrumentation. For example, the addition of diagnostic capabilities will identify coming events and permit action before shutdowns occur as well as indicate causes of power reductions and outages.

Phase II will require very careful and skillful handling of plant details to improve the overall plant MTBF above 1000 hours. In the final analysis it may require raising the combustion-turbine goals in order to improve the overall plant MTBF to more nearly meet the Phase II goal of 3000 hours. Risk and failure modes and effects analyses will also be required in Phase II to give better visibility to the design results obtained.

Richard L. Duncan, Project Manager
Advanced Power Systems Division

ACKNOWLEDGMENTS

This report has been prepared by the General Electric Gas Turbine Division for the Electric Power Research Institute. R.G. Kunkel is the Program Manager. The contributors to the report are acknowledged and noted with appreciation:

ED Alderson	BM Kaupang
JG Almstead	G Krauss
DE Bain	DM Kercher
JF Barr	RG Kunkel
WH Boothe	HE Miller
FL Bowman	HA Multhaup
DJ Comstock	A Meyers
SA Dellavilla	JR Parsons
NR Dibelius	CG Petroff
HV Doering	MJ Place
GA Durgin	GW Probert
SS Dreymann	GW Scheper
BR Fick	RC Sheldon
WR Foote	TK Staley
M Freedman	RL Thorkildsen
G Grove	CF Wilhelm
PB Johnston	KP Zeman
PM Jarvis	

The General Electric components participating in this program are the Gas Turbine Engineering and Manufacturing Department, Gas Turbine Customer Support Department and the Electric Utility Systems and Engineering Department.

CONTENTS

SECTION		PAGE
SUMMARY		
Executive Summary		
VOLUME 1		
	Task 1.0 - Present Market Offering and Field Experience	
1.1	Introduction	1-1
1.2	Reliability Model	1-2
1.3	Current Product Reliability	1-15
1.3.1	Peak/Mid-Range	1-15
1.3.2	Baseload	1-18
1.3.3	Inherent Reliability Criteria	1-18
1.3.4	Extrapolation to Inherent Baseload Flange-to-Flange	1-18
1.3.5	Extrapolation to Inherent Baseload Accessories	1-24
1.3.6	Extrapolation to Inherent Baseload Controls	1-42
1.3.7	Extrapolation to Inherent Baseload Steam Turbine/HRSG	1-48
	Task 2.0 - Trade-Off and Reliability Design Criteria	
2.0	Introduction	2-1
2.1	Basic Flange-to-Flange Configuration	2-1
2.1.1	Introduction	2-1
2.1.2	Compressor	2-1
2.1.3	Combustor	2-5

CONTENTS (Cont'd)

SECTION		PAGE
2.1.4	Turbine	2-21
	1. Number of Turbine Stages	2-21
	2. Number of Turbine Shafts	2-23
2.2	Cycle Considerations	2-25
2.3	Startup, Loading and Shutdown	2-30
2.3.1	General Discussion	2-30
2.3.2	Compressor Blades and Vanes	2-37
2.4	Combustor Subsystem	2-39
2.4.1	Field Experience	2-39
2.4.2	Design Requirements For The HRGT Combustor	2-43
	1. Effects of Geometry	2-43
	2. Effects of Firing Temperature and Residual Fuel	2-44
	3. Environmental Factors	2-48
	4. Reliability and Maintainability	2-51
2.4.3	Combustion Inspection Intervals	2-53
2.4.4	Reliability Versus Emission Capability	2-53
2.5	Turbine Subsystem	2-56
2.5.1	Buckets and Rotors	2-56
	1. Field Experience	2-56
	2. Failure Mechanisms: Causes, and Design Guides	2-61
	3. Design Requirements for HRGT Buckets	2-65
	a. Cycle Considerations	2-65
	b. Effects of Firing Temperature	2-66
	1) Creep Life	2-66
	2) Effects of Machine Size on Creep Life	2-75
	3) LCF Life	2-78
	4) High Cycle Fatigue Life	2-79
	5) Corrosion Life	2-79
	c. Effects of Turbine Speed	2-88
	4. Failure Densities Greater Than Predicted	2-95
	a. New Technologies	2-95
	b. Unforeseen Operating Practice	2-97

CONTENTS (Cont'd)

SECTION		PAGE
	c. Areas Which Defy Analysis	2-97
	d. Dimensional Deviations	2-99
	e. Material Property Variations	2-99
2.5.2	Nozzles	2-100
	1. Field Experience	2-100
	2. Failure Mechanisms and Design Guides	2-101
	3. Design Requirements for HRGT Nozzles	2-107
	a. LCF Life	2-107
	b. Creep Deflection Life	2-113
	c. Creep Distortion (Ballooning) Life	2-118
	d. Oxidation/Corrosion Life	2-120
	e. Effect of Machine Size	2-122
	f. Summary	2-123
2.5.3	Required Cooling Effectivenesses, Flows and Configurations	2-123
2.5.4	Hot Gas Path Inspection Intervals, and Inspection Interval Summary	2-134
2.6	Bearing Subsystem	2-140
2.7	Design Features Which Facilitate Field Maintenance	2-144
2.7.1	Inspection	2-144
2.7.2	Condition Monitoring	2-145
2.7.3	Disassembly/Reassembly	2-145
2.7.4	Storage	2-150
2.7.5	Identification	2-150
2.7.6	Human Factors	2-151
2.8	Effects of Deposition on Wash Intervals	2-151
2.9	Heat Rate and Output	2-158
2.10	Accessory Subsystem	2-166
2.10.1	Main Contributors to Degradation of Reliability	2-166
2.10.2	System Requirements for Heavy Fuels	2-169
	1. On-Base Modifications	2-169
	2. Off-Base Equipment Requirements	2-170

CONTENTS (Cont'd)

SECTION		PAGE
	3. Typical Heavy Fuel System for Trade-Off	2-171
	4. Effect on Reliability	2-172
2.10.3	Starting Reliability	2-176
2.10.4	Design and Construction Features to Facilitate Maintenance	2-178
2.11	Controls Subsystem	2-179
2.12	Steam Turbine and HRSG Subsystem	2-181
2.12.1	Effects of Heavy Fuels (Crude or Residual) on Steam Cycle Equipment	2-181
2.12.2	Steam Cycle Equipment Starting Restraints	2-183
	1. Control of HRSG Drum Water Level	2-183
	2. Control of HRSG Drum Thermal Strain	2-185
	3. Control of Steam Turbine Thermal Strain	2-185
2.12.3	Analysis of the Effect of the Number of Gas Turbines on Combined-Cycle Availability	2-185
2.13	Results	2-191
2.13.1	Introduction	2-191
2.13.2	Development of Power Cost As a Reliability Tool	2-193
	1. Trade-Off Methodology	2-193
	2. Power Cost Equation	2-193
	3. Definition of Trade-Off Cases	2-202
2.13.3	Presentation and Discussion of Results	2-205
	1. Availability of MS7001 in Baseload Duty	2-205
	2. Results of Trade-Off Configurations	2-236
	3. Fuel Cost Results	2-248
	4. Turbine Wash Cycle	2-248
	5. Summary	2-254
2.13.4	Conclusions	2-260
	1. Transfer Function	2-261
	2. Recommendations for Task 3.0	2-272
VOLUME 2		
	Task 3.0 Baseload Plant Conceptual Design	
3.1	Introduction - Flange to Flange	3-1

CONTENTS (Cont'd)

SECTION		PAGE
3.1.1.	Compressor	3-4
	1. Inlet Casing	3-4
	2. Forward and Aft Compressor Casings	3-6
	3. Compressor Discharge Casing	3-6
	4. Compressor Rotor	3-7
3.1.2	Combustor	3-8
	1. General Design Considerations	3-8
	2. Aerothermal Design	3-12
	3. Mechanical Design	3-17
3.1.3	Turbine	3-20
	1. Rotor	3-20
	2. Nozzles	3-25
	3. Shells, Casings and Supports	3-28
	a. Turbine Shell	3-28
	b. Exhaust Frame and Diffuser	3-30
	c. Aft Support Leg	3-31
3.1.4	Bearings	3-31
3.1.5	Maintenance and Service Features	3-32
	1. Gas Turbine Cleaning	3-32
	2. Maintenance and Inspection	3-33
3.1.6	Heat Balance Diagram and Cooling Flows	3-38
	1. Heat Balance Diagram	3-38
	2. Cooling Flows	3-40
3.2	Gas Turbine Accessories	3-40
3.2.1	Atomizing Air System	3-44
3.2.2	Fuel System	3-49
3.2.3	Cooling Water System	3-51
3.2.4	Lubricating System	3-52
3.2.5	Load System	3-55
3.2.6	Starting System	3-56
3.2.7	Fire Protection System	3-56

CONTENTS (Cont'd)

SECTION		PAGE
3.3	Combined-Cycle Plant Controls	3-58
3.3.1	Plant Level Controls	3-59
	1. Introduction	3-59
	2. Plant Master Control	3-61
	3. Plant Load Control	3-62
	4. Plant Protective System	3-63
3.3.2	Unit Level Controls	3-63
	1. Introduction	3-63
	2. Gas Turbine Unit Level Control	3-63
	3. HRSG Unit Level Control	3-65
	4. Steam Turbine Unit Level Control	3-67
3.3.3	Gas Turbine Control	3-69
	1. SPEEDTRONIC	3-69
	2. On-Line Diagnostics	3-76
3.4	HRGT Combined-Cycle Plant Design	3-83
	1. Introduction	3-83
	2. Major Equipment Arrangement	3-83
3.4.1	Steam Side Equipment	3-88
	1. Heat Recovery Steam Generator and Auxiliaries	3-88
	2. Steam Turbine Generator and Auxiliaries	3-93
3.4.2	Plant Auxiliary Equipment	3-98
	1. Fuel Storage, Treatment and Forwarding	3-98
	2. Main Circulating Water System	3-99
	3. Auxiliary Cooling System	3-99
	4. Water Treatment Systems	3-99
	5. Auxiliary Steam System	3-102
	6. Fire Protection System	3-102
	7. Instrument and Service Air System	3-102
3.5	New Centerline Plant Reliability	3-103
3.6	Value of Availability	3-133
3.7	System Level Redundancy	3-142
3.7.1	Introduction	3-142
3.7.2	Analytical Approaches	3-143

CONTENTS (Cont'd)

SECTION		PAGE
3.7.3	Power Cost Trade-off Analysis Summary	3-146
3.7.4	Power Cost Trade-off Analysis Details	3-157
3.7.5	Simplified Fuel versus Reliability Cost Trade-off	3-169
	Task 4.0 - Recommended R&D Programs	
4.0	Key Technologies Research and Development Programs	4-1
4.1	Development Programs and Investigations	4-1
4.2	Manufacturing and Process Developments	4-11
4.3	Summary Program Plans	4-11
	Task 5.0 - Modifications for Peak and Mid-Range Duty and Coal-Derived Fuels	
5.1	Modifications for Peak and Mid-Range Duty	5-1
	1. Petroleum Fuel Effects	5-1
	2. Hardware Effects	5-1
5.2	Modifications to Baseload Plant for Coal-Derived Fuels	5-5
5.2.1	Coal-Derived Fuel Chararcteristics	5-6
	1. Coal-Derived Liquids (CDL's)	5-6
	2. Coal-Derived Gases (CDG's)	5-15
5.2.2	Design Impact of Coal-Derived Fuels	5-23
	1. Coal-Derived Liquids	5-23
	2. Coal-Derived Gases	5-27
5.2.3	Performance Comparisons of an Oil Plant Converted to Coal-Derived Fuels	5-50
	1. Performance on Distillate	5-51
	2. Performance on Medium Cut CDL	5-55
	3. Performance on Heavy Cut CDL	5-59
	4. Estimated Plant Performance on Methanol	5-61
	5. Performance on Intermediate Btu Coal Gas from a Free Standing Plant	5-63
	6. Performance for Integrated Gasifier/Combined-Cycle Systems - General	5-63
	7. Performance for Integrated Air-Blown Entrained Flow Blown Entrained Flow Gasifier System	5-71
	8. Performance for Integrated Oxygen-Blown Entrained Flow Gasifier System	5-73

CONTENTS (Cont'd)

SECTION		PAGE
	9. Performance for Integrated Air-Blown Fixed Bed Gasification System	5-75
	10. Plant Performance Summary	5-79
5.2.4	Retrofit and Availability Considerations for Coal-Derived Fuels	5-79
	1. Baseline Design Considerations	5-79
	a. Design Criteria	5-81
	b. Design Basis	5-83
	2. Plant Arrangement	5-87
	3. Modifications for Coal-Derived Fuels	5-89
	4. Provisions for Availability on Coal-Derived Fuels	5-100
	5. Coal-Derived Fuels References	5-108
	Task 6.0 - Potential Retrofits	
6.0	Present Market Offering Retrofits	6-1
APPENDICES		
A	Life Cycle Cost	A-1
B	Supplement No. 1 to the EPRI Technical Assessment Guide	B-1

ILLUSTRATIONS

FIGURE		PAGE
VOLUME 2		
3.1	New Centerline Turbine Concept	3-2
3.2	HRGTCC Component Identification	3-3
3.3	Reverse-Flow Combustion System	3-10
3.4	Cross Section of the Combustion Chamber	3-14
3.5	Multiple Fuel Nozzle Combustion Cover	3-16
3.6	Combustion Liner Cooling Configuration	3-18
3.7	Bucket Retaining Device	3-24
3.8	Disassembly 1st-Stage Nozzle and Buckets	3-26
3.9	Aft Turbine Shaft Core Plug	3-27
3.10	Exhaust Frame and Diffuser Details	3-29
3.11	Disassembly of Compressor Casing and Bearings	3-34
3.12	Disassembly of Combustion System	3-35
3.13	Turbine Hot Gas Path Inspection	3-37
3.14	Heat Balance Diagram	3-39
3.15	General Cooling Flows Diagram	3-41
3.16	Schematic of Air-Cooled Machine	3-42
3.17	Overall Gas Turbine Configuration	3-46
3.18	Atomizing Air System	3-47
3.19	Liquid Fuel System	3-50
3.20	Lube Oil System	3-53
3.21	Fire Protection System	3-57
3.22	Combined-Cycle Control Hierarchy	3-60
3.23	Gas Turbine-Generator Control	3-70
3.24	Gas Turbine Electrical Controls	3-71
3.25	Gas Turbine Protective Systems	3-72
3.26	Gas Turbine-Generator Protective Logic	3-73

ILLUSTRATIONS (Cont'd)

FIGURE		PAGE
3.27	Temperature Control and Protection System	3-74
3.28	Speed/Load Control & Protection	3-75
3.29	Topical Arrangement for Distillate Fuel Plant	3-84
3.30	Base Case Plant Arrangement - No. 2 Petroleum Distillate Fuel	3-85
3.31	Base Case Plant Arrangement - No. 6 Petroleum Residual Plant.	3-86
3.32	HRSG Configuration Outline	3-90
3.33	Steam Turbine Generator Configuration	3-94
3.34	Water Treatment System Flow Diagram	3-100
3.35	Probability Distribution of Downtime Costs for STAG Baseload Duty	3-137
3.36	Reliability Block Diagram of Redundancy Trade-off STAG 400	3-144
3.37	Reliability Block Diagrams of GT/HRSG Redundancy Trade-off in 2 STAG 400's	3-145
3.38	Power Cost Results - Distillate Fuel	3-149
3.39	Power Cost Results - Residual Fuel	3-150
3.40	Availability Profile Comparison	3-151
3.41	Cost/Value of Redundancy in Baseload Duty	3-170
5.1	Composition of Coal Liquid Distillates	5-10
5.2	Fuel Gas Piping Arrangement	5-30
5.3	Integrated Air-Blown Entrained Flow Gasification Combined-Cycle System	5-32
5.4	VCS and Conventional Combustors	5-34
5.5	Conventional and Low Btu Cap-Cowl Assemblies and Fuel Nozzle Pieces	5-35
5.6	Extraction Air Piping Arrangement	5-36
5.7	Extraction Air Skid Schematic	5-38
5.8	Fuel Gas Control Schematic	5-39
5.9	STAG 407E GE Turbine/Steam Generator Set and a Typical Conversion for Low Btu Coal Gas	5-40
5.10	Fuel Gas/Extraction Air Piping Arrangement (Plan)	5-42

ILLUSTRATIONS (Cont'd)

FIGURE		PAGE
5.11	Fuel Gas/Extraction Air Piping Arrangement (Elevation)	5-43
5.12	Fuel Control Schematic	5-47
5.13	HRGTCC Plant Performance with Dry NOx Control and Distillate Fuel	5-53
5.14	HRGTCC Plant Performance with Wet NOx Control and Distillate Fuel	5-54
5.15	HRGTCC Plant Performance with Wet NOx Control and Medium Cut CDL	5-57
5.16	HRGTCC Plant Performance with Wet NOx Control and Heavy Cut CDL	5-60
5.17	HRGTCC Plant Performance with Wet NOx Control and Methanol Fuel	5-62
5.18	HRGTCC Plant Performance with Wet NOx Control and MBtu Gas from a Free Standing Fuel Plant	5-64
5.19	Integrated Air-Blown Entrained Flow - CC	5-66
5.20	Integrated O_2 Blown Entrained Flow - CC	5-67
5.21	Integrated Air-Blown Fixed Bed Gasification System - CC	5-68
5.22	Effects of System Integration and Fuel Plant Loss Factors on Plant Performance	5-78
5.23	Plant Arrangement - Drawing Showing Building Block Layout	5-90
5.24	Typical Arrangement for Distillate Fuel	5-91
5.25	Base Case - No.2 Petroleum Distillate Plant	5-92
5.26	Medium Cut Coal-Derived Liquid Plant	5-96
5.27	Heavy Cut Coal-Derived Liquid Plant	5-97
5.28	Free Standing Oxygen-Blown Intermediate Btu Coal Gas Plant	5-98
5.29	Integrated Air-Blown Entrained Flow Low Btu Gasification Plant	5-99
5.30	Load Control Modes - IOE-CC	5-102
5.31	IGCC Station Control - Entrained Flow/O_2 Blown	5-103
5.32	Simplified Schematic - IGCC Entrained Bed Oxygen Blown Gasifier/Combined Cycle	5-105

ILLUSTRATIONS (Con'd)

FIGURE		PAGE
5.33	Simplified Schematic IGCC Station Control	5-106
5.34	Oxygen Plant Simplified Schematic - Typical	5-107
B-1	Sensitivity of Power Cost to Changes in Capacity Factor	B-13

TABLES

TABLE		PAGE
VOLUME 2		
3.1	Structural Component Weights	3-5
3.2	Combustor Design Considerations and Related Fuel Properties	3-11
3.3	Overall Simple-Cycle Machine Weights	3-45
3.4	Repair While Running - Statistical Significance	3-82
3.5	Component Weights Combined Cycle Machine	3-89
3.6	Configuration Description	3-104
3.7	Comparison of Program Targets With Plant Configuration	3-114
3.8	Reliability Results Task 3.0 Configurations Cases 32 & 33	3-119
3.9	Case 32 - Air-Cooled Distillate Fuel - Configuration 4	3-121
3.10	Case 33 - Air-Cooled Residual Fuel - Configuration 4	3-125
3.11	Maintenance Parameters for Potential New Centerline Design	3-129
3.12	Theorethical Failure Fates for Flange to Flange Hardware	3-130
3.13	Reliability Results Task 3.0 Configuration Cases 30 & 31	3-131
3.14	Power Cost Calculation and Value of Availability	3-134
3.15	Next Generation Downtime Costs	3-139
3.16	Probability of Need	3-141
3.17	Inputs and Assumptions For Redundancy Evaluation	3-147
3.18	Summary of Power Cost With and Without Redundancy	3-152
3.19	Summary of Net Savings/Loss With Redundancy	3-153
3.20	Summary of Important Parameters	3-154
3.21	Reliability Parameters for Redundant System Cases	3-158
3.22	GT/HRSG Redundancy Evaluation CF=Avail. m=1000	3-160
3.23	GT/HRSG Redundancy Evaluation CF=0.7 m=100	3-161
3.24	Comparison of One STAG 400 with GT/HRSG Redundancy	3-162
3.25	Analysis Details with SOH Reduced to Zero for Redundant Systems	3-164
3.26	Analysis Details with SOH Unchanged for Redundant Systems	3-165

TABLES (Cont'd)

TABLE		PAGE
3.27	Analysis Details with SOH Reduced to Zero for Redundant Systems and Capacity Factor of 0.4	3-167
3.25&3.27	Analysis Details with SOH Reduced to Zero for Redundant Systems	3-168
3.28	Definition of Parameters and Values	3-171
3.29	Example of Redundancy Trade-off	3-175
5.1	Accessories Baseload Options	5-4
5.2	CDL Processes	5-8
5.3	CDL Projected Properties of Typical Products	5-11
5.4	Projected Properties of Commercial SRC-II Coal Liquid Distillate Fuels	5-12
5.5	CDL Problem Areas	5-14
5.6	CD Gases Projected Properties Based on Ill. #6	5-18
5.7	Coal Derived Gases	5-21
5.8	CDG Considerations	5-22
5.9	CDL Constituent Effects and Remedial Action	5-25
5.10	Methanol Liquid Fuels Properties	5-52
5.11	Preliminary Performance Comparison	5-56
5.12	STAG Plant Performance Reconciliation - Non Integrated Plants	5-58
5.13	ICGS - Combined-Cycle Performance	5-70
5.14	Overall Plant Performance Summary	5-80
5.15	Generation and Utilization of High Pressure Steam	5-85
5.16	Steam Turbine - Condenser & Heat Rejection Summary	5-88
5.17	Gas Turbine Equipment Additions and Modifications	5-93
5.18	Steam System Additions and Modifications	5-94
5.19	Major Plant Modifications	5-95
6.1	Summary of Potential Accessories Retrofits	6-2
6.2	Fixed Fleet Retrofits	6-4

TABLES (Cont'd)

TABLE		PAGE
B.1	Example Format for Capital Investment and Revenue Requirement Summary Tables	B-14
B.2	Economic Variables (Reference Date 11/1/78) For EPRI RP1187 Combined-Cycle Projects	B-16
B.3	Design and Cost Estimate Classifications	B-17
B.4	Example of AFDC Calculation from the Construction Period Cash Flow	B-18

Blank

GLOSSARY

AAA	=	Air-Cooled Nozzles, Air-Cooled Buckets, Air-Cooled Wheelspace
AH	=	Available Hours
BOP	=	Balance of Plant
CC	=	Combined Cycle
CDF	=	Coal Derived Fuel
CDL	=	Coal Derived Liquids
CDG	=	Coal Derived Gases
CP	=	Centipoise
CST	=	Centistopes
DASSH	=	Deaerating Steam Supply Heater
DD	=	Design and Development
DTC_{FO}	=	Downtime Cost for Forced Outages
DTC_{so}	=	Downtime Cost for Scheduled Outages
ECM	=	Electro Chemical Milling
EDS	=	Exxon Donor Solvent
EEI	=	Edison Electric Institute
EPA	=	Environmental Protection Agency
FBN	=	Fuel Bound Nitrogen
F/F	=	Flange-to-Flange
FH	=	Fired Hours
FO	=	Forced Outages
FOH	=	Forced Outage Downtime Rate - Hrs/Unit Year
FOD	=	Foreign Object Damage
FMEA	=	Failure Mode and Effects Analysis
FR	=	Failure Rate
FSNL	=	Full Speed No Load

FSFL	=	Full Speed Full Load
GEGAS	=	General Electric Fixed Bed Gasifier
GEGTD	=	General Electric Gas Turbine Division
GHR	=	Gross Heat Rate
GT	=	Gas Turbine
GTD	=	Gas Turbine Division
HCF	=	High Cycle Fatigue
HHV	=	Higher Heating Value
HGP	=	Hot Gas Path
HP	=	High Pressure
HRGT	=	High Reliability Gas Turbine
HRSG	=	Heat Recovery Steam Generator
HTTT	=	High Temperature Turbine Technology
HV	=	High Voltage
IAE-CC	=	Integrated air-blown entained flow combined cycle
IAF-CC	=	Integrated air-blown fixed bed combined cycle
ICGS	=	Integrated Coal Gasification System
IOE-CC	=	Integrated oxygen-blown entraned flow combined cycle
ISO	=	International Standards Organization
KgPs	=	Kilograms per second
LCC	=	Life Cycle Cost
LCF	=	Low Cycle Fatigue
LHV	=	Lower Heat Value
LMTD	=	Log Mean Temperature Difference
LP	=	Low Pressure
m	=	Meter

GLOSSARY (Cont'd)

m	=	Utility System Grid Characteristic
mm	=	millimeter
MPa	=	Mega Pascal
MTBF	=	Mean Time Between Failures - Operating Hours
NDE	=	Non-Destructive Evaluation
NSPS	=	New Source Performance Standards
OPT	=	Optional
ORAP	=	Operational Reliability Analysis Program
PCD	=	Pressure Compressor Discharge
PH	=	Period Hours
PMO	=	Present Market Offering
PPE	=	Power Plant Engineering
ppmvd	=	Parts Per Million By Volume Dry
ppmvw	=	Parts Per Million By Volume Wet
ppmw	=	Parts Per Million By Weight
PPS	=	Pounds Per Second
PQI	=	Product Quality Improvement
S	=	Entrophy
SC	=	Simple Cycle
SGC	=	Synthetic Gas Cooler
SO	=	Scheduled Outages
SOA	=	State-of-the-Art
SOH	=	Scheduled Outage Downtime Rate - Hr/Unit Year
SPEEDTRONIC™	=	Gas Turbine Controller
SPFM	=	Single Point Failure Mode
SRC	=	Solvent Refined Coal

SSA	=	Steam-Cooled Nozzles, Steam-Cooled Buckets, Air-Cooled Wheel-spaces
ST	=	Steam Turbine
STAG™	=	Steam Turbine and Gas Turbine in Combined Cycle
STG	=	Stage
STD	=	Standard
T_f	=	Firing Temperature
TM	=	Trade Mark of the General Electric Company
Unit Year	=	8760 hours
VCE	=	Voltage Control Electric
VCS	=	Variable Cross Section
W_c	=	Compressor Inlet Air Flow
WAA	=	Water-Cooled Nozzles, Air-Cooled Buckets, Air-Cooled Wheel-spaces
X_c	=	Compressor Pressure Ratio
λ	=	Failure Rate - Events/Unit Year

Special Definitions

AVAILABILITY = Availability of Combined-Cycle Power

$$= \frac{\Sigma AH \times \text{Available CC MW}}{PH \times \text{Installed CC MW}}$$

EQUIVALENT AVAILABLITY = Availability of either Combined or Simple Cycle Power

$$= \frac{\Sigma AH \times \text{Available MW}}{PH \times \text{Installed MW}}$$

CF = Capacity Factor

$$= \frac{\Sigma FH \times \text{Generated MW}}{PH \times \text{Installed MW}}$$

Distillate Fuel = Clean #2 petroleum fuel, considered free of all ash forming constituents.

Ash Forming Fuel = All other petroleum fuels such as crudes, residuals, blends and contaminated distillates which contain ash forming constituents that cause corrosion and/or deposition and fouling of turbine air foils and other hot section surfaces.

Task 3.0 - Baseload Plant Conceptual Design

3.1 Introduction - Flange-To-Flange

The purpose of this section is to describe the design features which are incorporated in the flange-to-flange portion of the new centerline design as illustrated in Figure 3.1. The text treats each of the flange-to-flange subsystems separately, viz.

- Compressor
- Combustor
- Turbine
- Bearings

This permits ready comparisions between the features which were selected for the new centerline design and the numerous trade-off studies and discussions of Tasks 1 and 2 which addressed the key issues of reliability, maintainability and fuel flexibility. These four selections of the text are followed by discussions of cleaning, maintenance and inspection.

It is emphasized that the design features which are proposed, insofar as they represent departures from the present market offering MS7001E machine, would be introduced on a gradual basis to permit sufficient time for proper detailed design and testing programs to be completed, and to gain practical field experience. It is believed that this longstanding Gas Turbine Division practice of change through gradual evolution is fundamental to ensuring that the improvements in availability which are sought are achieved.

The following summary of the principal features of the new centerline design is presented as a guide to Figure 3.1 and to the detailed drawings and explanations which are given in Sections 3.1.1 to 3.1.5. Nomenclature for major components is given in Figure 3.2.

The compressor is similar to the MS7001E compressor, except that the inlet casing is modified to facilitate removal of the #1 bearing cap;

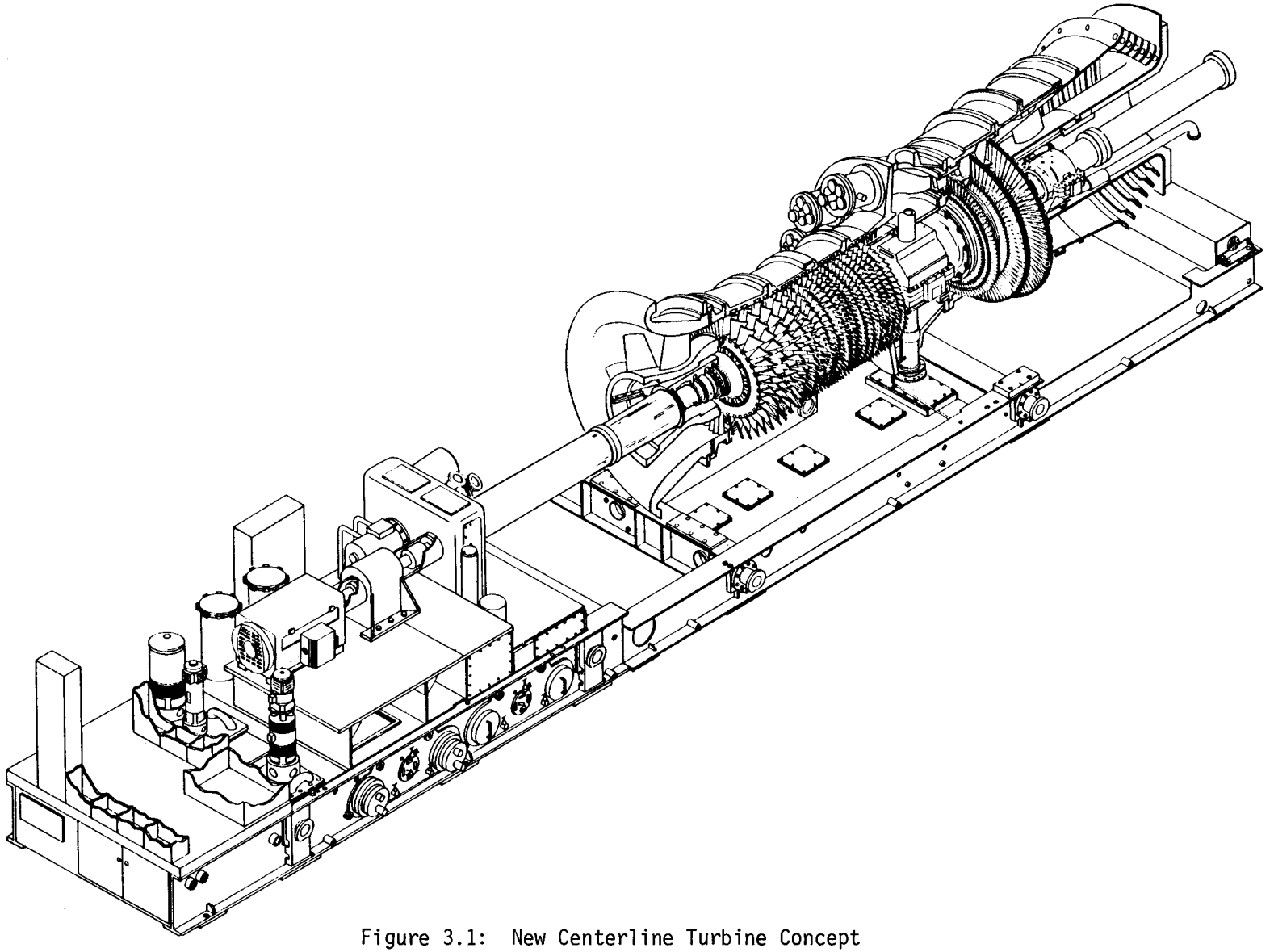

Figure 3.1: New Centerline Turbine Concept

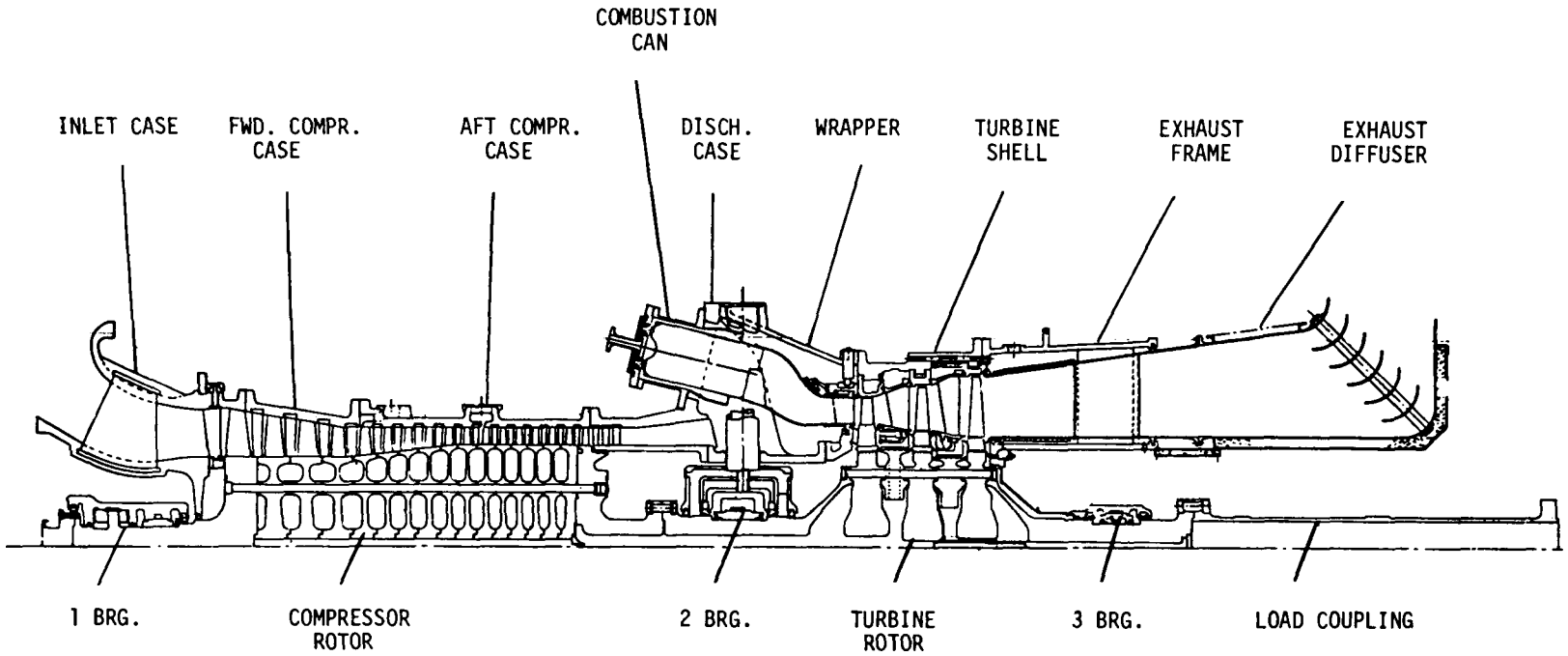

Figure 3.2: HRGTCC Component Identification

the position of the aft casing to discharge casing flange is moved aft to improve access to the last six stages.

The combustion subsystem consists of 10 individual chambers each of which incorporates a multiple fuel-nozzle head end; short, cylindrical, canted, slot-cooled, machined and welded ring liner; and a heavy-wall, positive curvature convection cooled transition piece. Steam or water injection is used for NOx control for low nitrogen fuels, catalytic deNOx in the HRSG is used for high nitrogen fuels.

The turbine is planned to be a single shaft, three-stage machine with three journal bearings, firing at 1985^{0}F base load on residual oil. All buckets, nozzles and wheelspaces are air-cooled except for the 3rd stage buckets and nozzles which do not require cooling. An off-base blower provides cooling air for the turbine shell and exhaust frame. The flange which mates the forward and aft sections of the diffuser is located sufficiently far aft to permit removal of the rotor without removal of the aft section.

The weight of the major structural components are listed in Table 3.1.

3.1.1 Compressor

1. Inlet Casing

The present MS7001 inlet casing is changed to an MS7002 type inlet, which was developed and extensively tested in the early seventies and is now used on the production MS9001. The feature of having the lower half of the bearing housing as an integral part of the lower half of the inlet casing is maintained. However, the aft bolting flange is relocated to allow usage of through bolting rather than the present arrangement of bolts in blind tapped holes.

These changes to the inlet result in the following improvements:

1. The stiffness of the inlet casing is increased because of an improved strut design and increased number of struts (8 vs. 7).

Table 3.1

Structural Component Weights

		LBS.	Kg
COMBUSTOR			
TRANSITION PIECE		100	45
CAN		350	159
LINER		85	38
WRAPPER		4800	2177
COMPRESSOR			
FORWARD CASING		3880	1760
REARWARD CASING		5000	2268
DISCHARGE CASING		6600	2994
BEARINGS			
NO. 1		750	340
NO. 2		1400	635
NO. 3		460	209
INLET		13970	6337
TURBINE - STATIONARY			
CASING		11270	5112
NOZZLE AND RETAING RING		950	431
NOZZLE SUPPORT		1000	454
TURBINE - ROTATING			
STAGE 1	WHEEL	5100	2313
	BUCKETS	1558	707
STAGE 2	WHEEL	5300	2404
	BUCKETS	1641	744
STAGE 3	WHEEL	3700	1648
	BUCKET	1183	536
EXHAUST		9730	4414
		78827	35755

2. Because the air flow path is more shallow, there is sufficient clearance to remove the #1 bearing cap without removal of the inlet plenum and top half of the inlet casing.

3. Since a portion of the inlet flow path is formed by sheet metal, there is a significant reduction in the inlet casing weight.

4. The use of sheet metal for a portion of the inlet flow path permits additional sound treatment and therefore a potentially quieter machine.

5. The incorporation of flanges that are through bolted, rather than blind tapped holes, should improve disassembly and assembly time and simplify removal and replacement of seized bolts if they occur.

2. Forward and Aft Compressor Casings

The compressor casings are similar to the MS7001E with the exception that the vertical flange mating with the discharge casing would be relocated. This flange would be moved aft, giving additional accessibility to the compressor rotor and stator blading. This move becomes possible because of the shortened combustion system which provides greater accessibility to the compressor casings.

3. Compressor Discharge Casing

The compressor discharge casing is changed to a design similar to the new MS6001A. The strong back of this machine is now through the compressor casing, into the discharge casing bulkhead and through a cone shaped wrapper into the turbine shell. This differs from the current MS7001E design where the strong back is from the compressor casing through 8 radial struts into the turbine shell, and where the combustion system is encased in a non-load carrying pressure vessel.

This new discharge casing design is possible because of the program emphasis on simple and combined cycle, rather than regenerative cycle applications, the latter requiring separation of the compressor discharge and combustion inlet air. It does not, however, limit the unit's fuel flexibility.

With this design, the openings in the bulkhead for the combustion hardware can be sized so that it is possible to remove all combustion liners and their respective transition pieces directly without removal of adjacent parts or removal of the wrapper. In addition, blind tapped holes between the discharge casing and the wrapper are eliminated and through bolting is used. Finally, this design, by providing a stiffer strong back, will insure better clearance control between the rotating and stationary components and thereby reduces turbine losses.

4. Compressor Rotor

The compressor rotor is the same as the MS7001E, which incorporates NiCrMoV wheels, except for the 16th and 17th stages which are CrMoV. This compressor is a proven design which has evolved aerodynamically from the MS5001 series. The MS7001A compressor was derived from the MS5001M by adding a stage at the compressor inlet and by scaling to MS7001 size. The MS7001E compressor differs from the MS7001A in that the first four stages were redesigned to increase airflow and improve efficiency. The compressor is an axial flow design with 17 stages.

The component stages of the compressor consist of individually bladed wheels which are held together axially by 12 Cr tie bolts on a common bolt circle. The tie bolt circle diameter is chosen such that sufficient rotor bending stiffness and torque carrying capacity are obtained. The bending stiffness load path of the rotor is at the tie bolt circle. Axial clearance is provided at the wheel rims for thermal growth. Wheel alignment and radial position of the compressor stages is provided by a rabbet fit near the wheel bores.

Cooling air for turbine buckets is extracted from the gas path by slots machined into the last stage compressor wheel. The extraction slots

guide the flow inward so that it enters the rotor bore with little swirl and pressure loss.

3.1.2 Combustor

1. General Design Considerations

Design of the combustion subsystem involves a consideration of features which are both aerothermal and mechanical.

The aerothermal design includes the air flow path around the transition piece, combustion liner and head end, the combustion air admission paths through the combustor liner and head end, the film cooling air paths, and the heat transfer. It also includes the fuel flow, mixing of the fuel and air, the combustion process itself, the temperature distribution at the exit of the combustion system (turbine inlet), and the emission of air pollutants. An important aspect of the design is that it minimizes combustion-driven pressure pulsations and mechanical resonance frequencies of the combustion system.

The mechanical configuration includes a combustion system design to meet the life objectives considering the combined effect of mechanical stresses, low-cycle fatigue, high-cycle fatigue, wear, yield strength, creep rupture, the properities of the materials, aging of the material, corrosion, erosion, and cumulative damage.

General Electric heavy-duty gas turbines use reverse-flow combustion systems similar to those illustrated in Figure 3.3. This combustor, made up of multiple liner and transition piece combinations, was originally chosen for its flexibility, maintainability, and inherent benefits in burning residual fuels. This basic combustor has been continually refined and applied to a wide range of fuels, and, more recently, to the reduction of combustion-generated emissions. The multiple combustion chamber arrangement readily allows modifications to improve performance; these modifications can be and are tested in full-sized single burners at full operating conditions of mass flow, pressure, and temperature in the General Electric Gas Turbine Development Laboratory.

Figure 3.3, outlines compressor discharge air flow, around and between the transition pieces, while cooling them. The air then enters the combustion liner through various diluting, cooling, and reaction air passages on the liner. Fuel injected into the combustion reaction zone (roughly one-third of the combustor length or approximately one and one-half diameters) reacts with a portion of the available air entering through the combustor holes. Recirculating flow patterns of air and burning gases provide the flame-holding function to maintain flame stability. The hot combustion gases are then mixed with secondary air entering through downstream rows of dilution holes to lower the average temperature of the gas before it enters the turbine.

Heat is transferred from the flame and hot gases to the liner walls and is removed by external convection and the thin film of air which is continually passed through the cooling slots to bathe the inside of the combustor wall.

General Electric's heavy-duty gas turbines burn a wide variety of fuels from natural gas to the various process gases, and from naphtha to heavy residual oils. Present combustors utilize atomizing air swirl nozzles which decrease smoke with the use of high viscosity and residual oils. Gas nozzles and oil nozzles are often combined to allow transfer between gas and oil operation without shutdown. At conventional firing temperatures a given combustor will accomodate gaseous fuels over a range of 1000 Btu/scf (35315 Btu/m^3) down to 300 Btu/scf (10594 Btu/m^3). If the heating value changes more than $\pm$10 percent, only a fuel nozzle change is required. Below 300 Btu/scf (10594 Btu/m^3) the liner, in addition to the fuel nozzle, may require redesign.

The reverse-flow combustor permits hardware sizes large-enough to optimize combustion rates commensurate with heavy fuels. The average shape (or volumetric) heat release rates are significantly less than those in most modern aircraft jet engines.

The various physical and chemical properties of fuels have a strong impact on combustor design. A listing of combustor design objectives and related fuel properties is shown in Table 3.2.

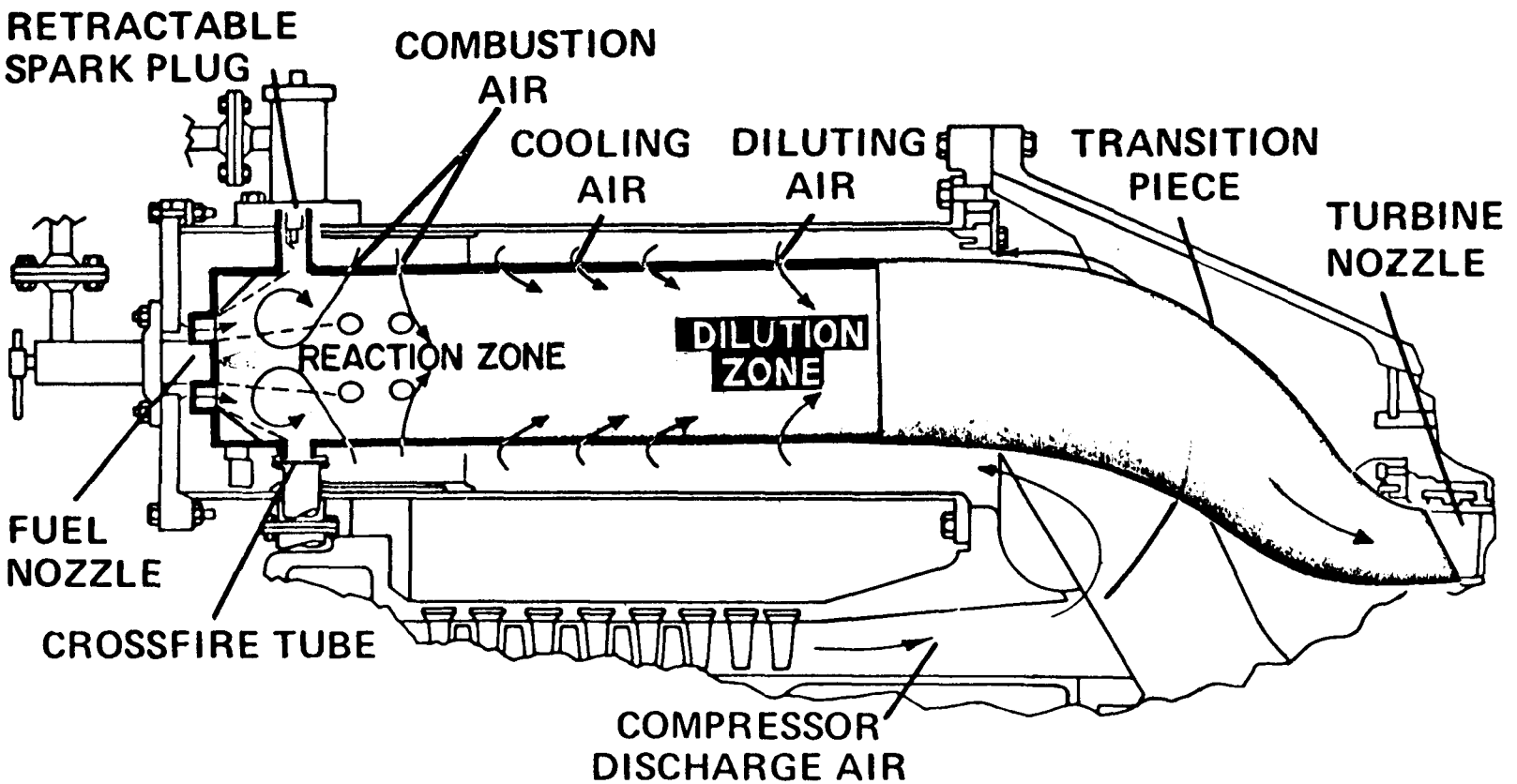

Figure 3.3: Reverse-Flow Combustion System

Table 3.2

Combustor Design Considerations
and Related Fuel Properties

COMBUSTOR DESIGN CONSIDERATIONS	FUEL PROPERTY
Metal Temperatures	Residual CArbon Carbon/Hydrogen Ratio Aromatic Content
Temperature Pattern Factor	
Pressure Drop	
Smoke Emissions	Residual Carbon Aromatic Content
Ignition Reliability	Viscosity Volatility
Cross-Firing Reliability	
Low and High Load Stability	
Fuel Nozzle Development	Viscosity
Atomizing Air Requirements	Viscosity
Dual Fuel Operation	Compatibility
NOx Emissions	Fuel Bound Nitrogen Stoichiometric Adiabatic Flame Temperature
Carbon Buildup	Carbon/Hydrogen Ratio Aromatic Content Viscosity
Resonance (Acoustic)	
CO and Hydrocarbon Emissions	Carbon/Hydrogen Aromatic Content

When running on distillate fuel, residual fuel, coal-derived liquids, or gaseous fuel above 300 Btu/scf, the life of this combustor is expected to be limited by mechanical wear. Life is not expected to be firing temperature sensitive until the firing temperature reaches 2100°F (1149°C) or above on residual or CDL's, or 2250°F (1232°C) on clean distillate or on clean-gaseous fuels. At the above mentioned temperatures, the respective liner lives are expected to be 14,000 hours. Also, wear is not expected to be affected by the number of starts. It follows that additonal improvements in life must be achieved by improving the wear characteristics of the combustor or by reducing combustion driven pressure pulsations.

For the High Reliability Gas Turbine Program, the multiple fuel-nozzle head end and machined ring liner were chosen. The General Electric Aircraft Engine Group is using the machined ring liner on most future designs. It will try and retrofit wherever possible. This liner is judged to be the most reliable design incorporating the best of present day aircraft and stationary gas turbine technology. It will also give the longest life when burning highly radiant fuels such as residual or coal-derived fuels. Water or steam injection is still required for NOx control when burning low nitrogen fuels; catalytic DNOx is required in the exhaust for high nitrogen fuels, including residual and coal-derived fuels.

At present, programs are in place to develop dry low NOx combustors which, when shown to be successful, would be considered for retrofitting the high reliability gas turbine. A special study would be required to determine how such a retrofit might be accomplished. Such a study is premature at this point because is is not known what the success in achieving low NOx will be, and if low NOx is achieved, what the failure mechanisms or parts lives will be.

2. Aerothermal Design

Combustor aerothermal design is based on a combination of theoretical fundamentals from aerodynamics, thermodynamics, chemistry, heat transfer and considerable empirical data gathered over many years of devel-

opment and field experience. Laboratory development is an essential element in the design process. Initial paper designs provide only a starting point from which development can proceed.

The combustor's preliminary design establishes the basic concepts, including the physical envelope, number of combustors, number of fuel nozzles per combustor, type of fuel atomization, type of head end, liner cooling scheme, flow distribution, pressure drop, transition piece shape, transition piece cooling scheme, mountings, source of ignition, crossfire tubes, and a method of emission control. Figure 3.4 shows a cross section of the combustion chamber for the new centerline design.

Selection of the number of chambers in a multiple chamber design is bounded by several aerodynamic considerations. First, the through-flow reference velocity must be constrained to a level that does not blow the flame front away, usually a value below 100 feet per second. The chamber diameter therefore increases inversely as the square root of the number of combustors. As the number of chambers increases, the pitch diameter on which they must be located increases. This increase in pitch diameter not only affects the machine envelope and the fuel piping but also increases the radius change from combustor exit to turbine nozzle inlet, which the transition piece must provide. Another parameter of importance to transition piece design is the ratio of turbine arc length per chamber to the chamber diameter. The arc length increases inversely as the number of chambers, increasing more rapidly then the chamber diameter, thus favoring a larger number of chambers.

If the combustion volume is held constant (constant heat release rate parameter) as the number of chambers is varied, then the surface area to be cooled varies directly as the square root of the number of chambers. This favors a smaller number of chambers.

Tradeoff among these variables with additional considerations of symmetry (an even number of combustors) crossfire geometry, fuel piping, maintenance accessibility, etc., quickly narrows the selection of chambers to a range of about 8-12. Ten chambers were selected in order to obtain the best mechanical arrangement.

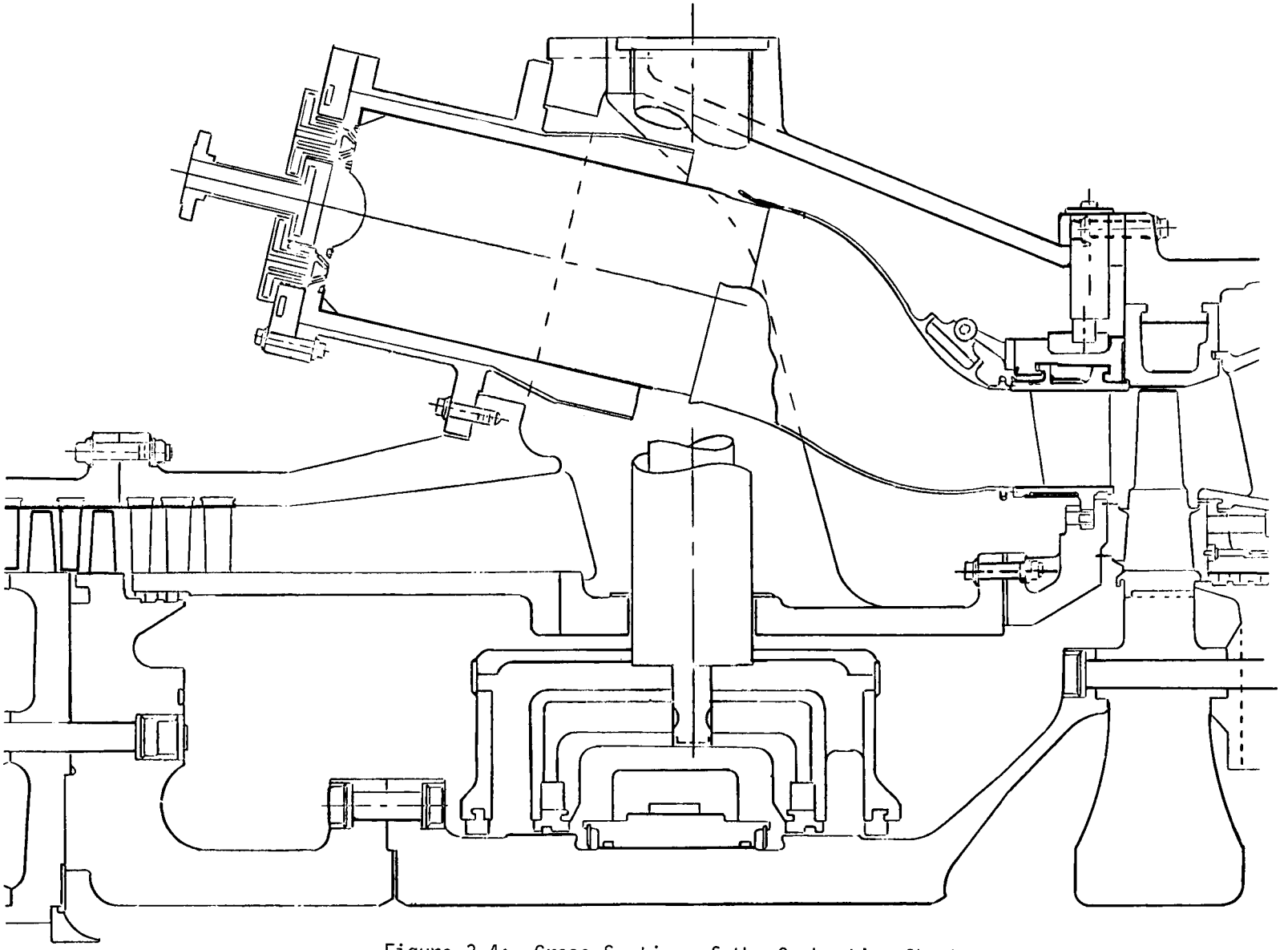

Figure 3.4: Cross-Section of the Combustion Chamber

Many years of experience have shown that air-atomizing fuel nozzles provide maximum fuel flexibility and are essential for the heavier fuels. The size of the nozzle will depend on the number of combustors and the number of fuel nozzles per combustor. Multiple fuel nozzle combustor designs have been shown to produce a lower level of combustion driven pressure pulsation and shorter flames due to better head end mixing. The multiple fuel nozzle combustor, shown in Figure 3.5, was selected in order to reduce the liner length and associated area to be film cooled, and in order to reduce the high-cycle fatigue stresses and wear resulting from the combustion driven pressure pulsations.

Associated with the multiple fuel nozzle design is the multiple swirl cup head end which increases mixing, decreases flame length, decreases pressure-driven pressure pulsations, and produces very little smoke. The hot portions of the head end are cooled by a combination of slot film cooling and back-side jet impingement cooling.

The shape of the transition piece is chosen to provide a smooth flow channel to the turbine nozzle, and to supply sufficient stiffness by using positively curved surfaces. The latter feature reduces the response to combustor system pressure pulsations and reduces high-cycle fatigue stresses. In order to design a transition piece with acceptable low-cycle fatigue life, care is exercised in design and cooling to control thermal gradients, high local temperatures and stress concentrations. Much attention is devoted to details such as seals, brackets (which often act as cooling fins), cooling films, etc.

It is expected that standard ignitors (spark plugs or capacitor discharge ignition) and standard flame detectors (ultraviolet) will be satisfactory. No extraordinary design effort is anticipated; it is necessary only that the proper locations be identified. The usual features incorporated to minimize fouling or burning of ignitors or flame detectors have proved reliable and are retained for this program.

A standard crossfire tube design will be selected within acceptable limits of length-to-diameter ratio. Care must also be exercised in the detailed design of the crossfire tube to ensure that it will crossfire

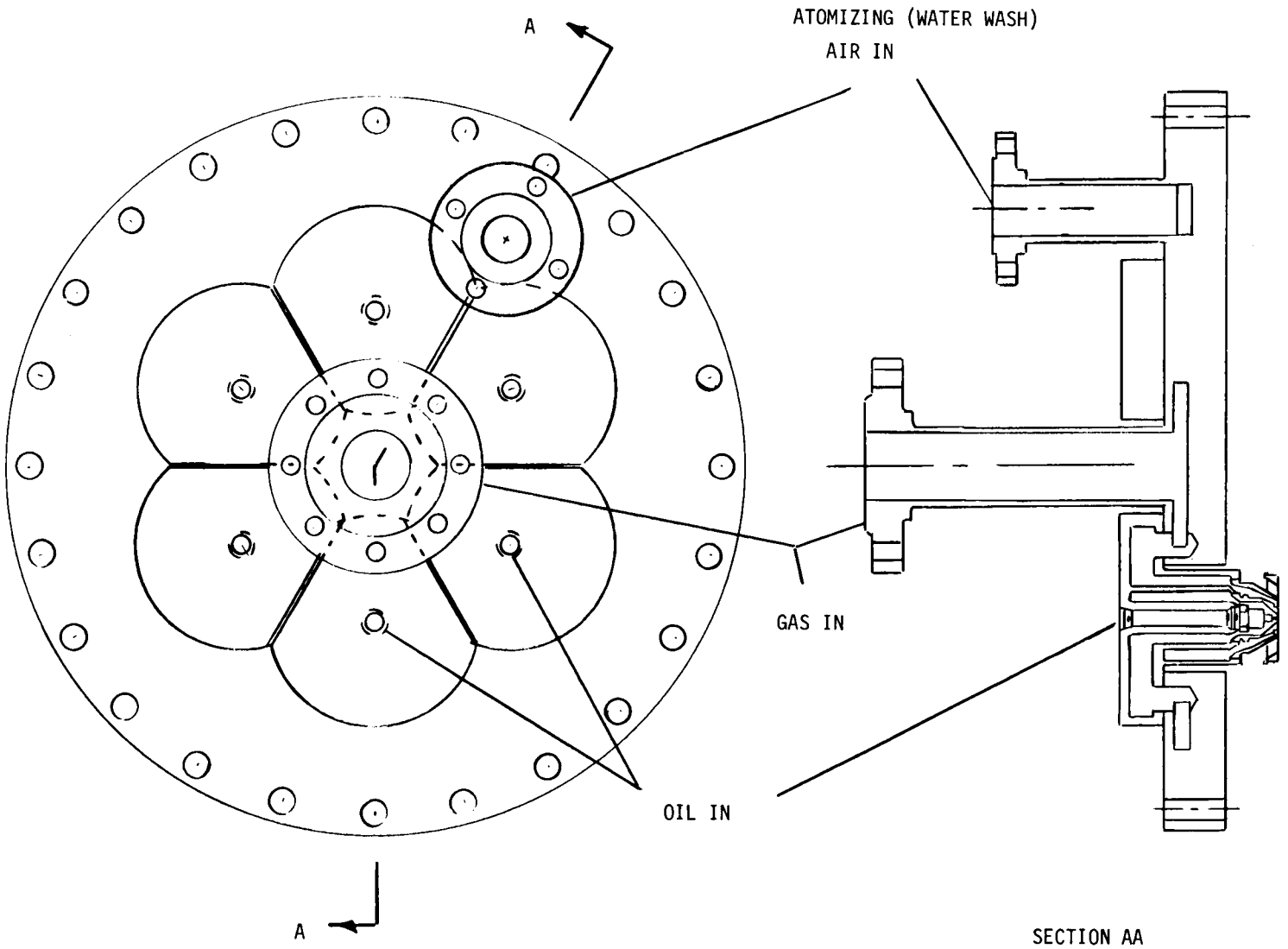

Figure 3.5: Multiple Fuel Nozzle Combustion Cover

when one chamber is lit and the adjacent chamber is not. On the other hand, hot gases must not flow through the crossfire tube due to small pressure differences from chamber to chamber when both are operating within acceptable limits.

3. Mechanical Design

Aircraft and stationary gas turbine experience has shown that slot cooled liners are superior to louvered liners, especially at the higher combustor temperatures. There are two basic types of slot cooled liner fabrication. One is a brazed construction which incorporates rings made from sheet metal. The other is a welded construction which incorporates machined rings. These configurations are illustrated in Figure 3.6.

Compared to the machined ring liner, the brazed ring liner has some inherent disadvantages. The brazing process is one which requires a high degree of process control and nondestructive inspection technology, in order to maintain high quality brazes. In addition, there is an inherent notch effect at the braze joint. The braze tends to be brittle and it is thus susceptible to crack initiation due to low-cycle fatigue (thermal stress) and to subsequent propagation by high-cycle fatigue.

Although there is less experience with machined rings, they do offer a greater degree of control of the thermal stresses and stiffness through the shape and thickness of the lip and adjacent web. The web acts as a fin and, if properly tapered, reduces the temperature gradient and resulting low-cycle fatigue thermal strains.

The quality of the machined ring liner is more controllable (including the welds) over the life of the design and is more inspectable than the brazed ring liner. The cost of the machined ring liner is estimated to be about 30 percent higher than that of the brazed ring liner; but the cost differential is expected to decrease as manufacturing processes are improved. A life improvement of approximately 2 to 1 is projected for the machined ring compared to the brazed ring liner. It is also

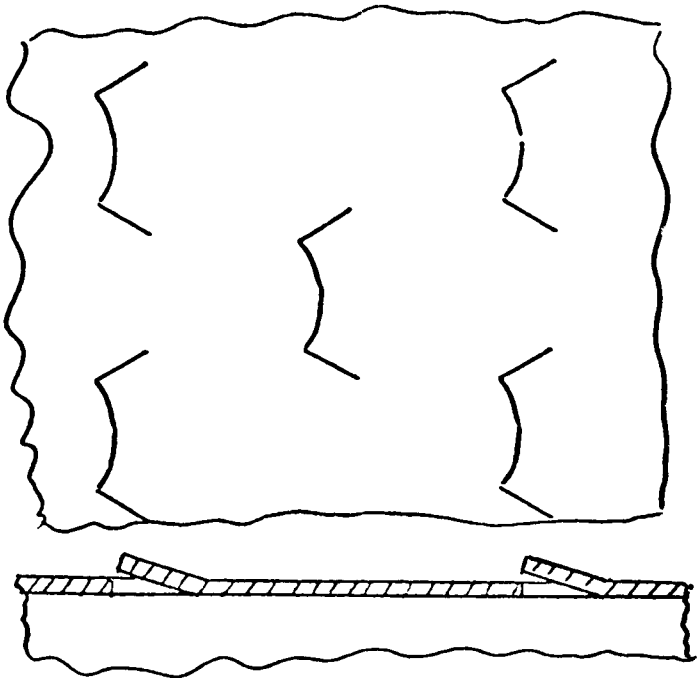

LOUVERED

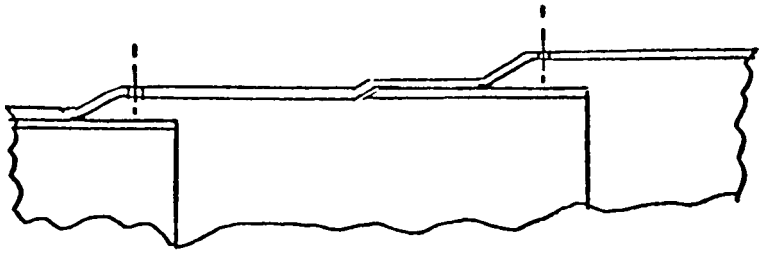

BRAZED RING

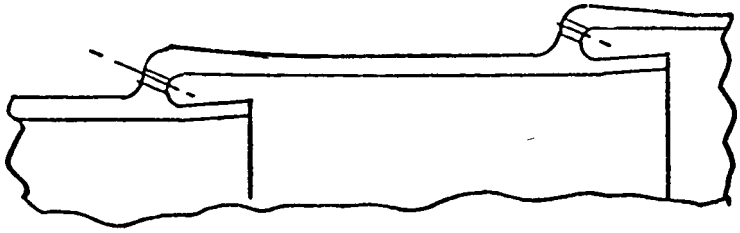

MACHINED RING

Figure 3.6: Combustion Liner Cooling Configuration

expected that, of present design concepts, the machined ring design provides the greatest growth potential for increasing firing temperatures. The machined ring liner has an advantage when burning fuels which produce highly radiant flames, such as residual fuel and coal-derived liquids. Even distillate CDL's have a high carbon to hydrogen ratio and, therefore, have high flame radiation.

The combustion wrapper has been changed to a new simple cone-shaped fabricated steel design. Also, unlike previous designs, the 1st stage nozzle is supported by this wrapper. The actual support arrangement for the 1st-stage nozzle does not change. Vertical support and alignment is built into the lower half of the wrapper; lateral alignment is by eccentric pins located at the top and bottom centerline. Compressor discharge air extraction is through ports built into the wrapper.

The advantages of this design are:

1. In conjunction with the new compressor discharge casing, it provides a stiffer strong back for the unit.

2. It permits ready access and removal of the 1st-stage turbine nozzle by eliminating the need to remove the turbine shell.

3. By providing improved stiffness to the unit, it insures better clearance control.

The combustion liner flow sleeve is combined into the combustion outer can. This improves disassembly and assembly time by reducing the number of parts and permitting a smaller, lighter combustion cover. The combustion can become the only major part on the flange-to-flange portion of the turbine assembly still using blind tapped holes. However, locking wire inserts (Helicoils) are incorporated to enhance disassembly.

The fuel passages in the fuel nozzle can be eroded by abrasive materials carried by the fuel. Adequate filtration, as close to the fuel nozzle as possible, is recommended to minimize erosion of the oil

passageways, including the spin slots, the spin chamber, and the exit orifices.

The machined ring liner is expected to have much longer life than the current brazed ring liner when both are run at 1985°F firing temperature. As a result of this extended life, the mechanism of failure will be seal wear and wear of rubbing joints, and not low or high cycle fatigue or creep, as it is with the brazed ring liner.

Seal failure is primarily due to wear at the mating surfaces. Sealing life is expected to be increased through the reduction of the number of seals and by introducing surface treatment to improve the resistance of the surfaces to abrasion. This is accomplished by reduction of the magnitude of combustion-driven pressure pulsations (shaking of the parts relative to one another, which produces wear), and by having the optimum seal surface pressure.

The primary source of fuel nozzle problems is erosion in the atomizing air passages, especially the air spin chamber. The main source of abrasive particles in the atomizing air passages is corrosion of the atomizing air components of the atomizing air system. It is believed that erosion by the air passages of the fuel nozzle could be reduced significantly by constructing the atomizing air system components of stainless steel, using adequate filtration just ahead of the fuel nozzle, and using more abrasion resistant material (such as STELLITE) for those air passages subject to erosion.

3.1.3 Turbine

1. Rotor

In order to achieve the objective bucket lives which are discussed in Task 1 and 2, at a firing temperature of 1985°F (1085°C), cooling is necessary for the 1st- and 2nd-stage. The 3rd-stage bucket does not require cooling. There will be 92 buckets per stage as in the MS7001E; bucket weights are summarized in Table 3.1.

Single-pass cooling holes exist in both 1st- and 2nd-stage buckets. Cooling holes are drilled radially from bucket root to tip in two operations. Holes are drilled radially downward through the airfoil from bucket tip to the platform. Mating holes are drilled radially upward from the bottom of the dovetail to the platform. The 1st-stage bucket has 13 cooling holes and the 2nd-stage has eight cooling holes.

Air enters both 1st- and 2nd-stage buckets through slots broached in the wheel at the dovetail. The coolant flow is metered by the buckets themselves as the cooling holes are the most restrictive areas in the cooling circuit. This allows for greatest coolant velocity and most efficient heat transfer in the bucket. The coolant exists the buckets at the tip, thus minimizing the risk of external plugging of cooling holes when ash bearing heavy fuels are burned.

The leading edge of the 1st-stage bucket is a circular configuration. This allows for a concentric cooling hole at the leading edge, which is advantageous to low-cycle fatigue life.

Bucket cooling circuit criteria which have been successfully applied to MS7000 series machines are applied here also. The cooling circuit is entirely internal to the rotor, eliminating the need for seals or packings between rotor and stator hardware. Cooling air is extracted radially inward between the 16th and 17th compressor stages. Foreign matter is centrifuged outward thus minimizing the amount of potentially detrimental material which enters the cooling circuit at this extraction point.

The material selected for all three bucket stages is Ni base IN-738. Corrosion life of the 1st-stage bucket is enhanced by applying a platinum-chromium-aluminide coating. A thin layer of platinum is electroplated onto the airfoil surface followed by pack-process layers of aluminum and chromium. This produces an extremely corrosion-resistant outer skin. It is estimated, based upon test data, that the platinum-chromium-aluminide coating adds an additional 75 percent to the corrosion life of buckets.

The corrosion lives of the 2nd- and 3rd-stage buckets exceed life objectives without application of a protective coating.

All buckets are investment cast and strengthened through solution and precipitation-hardening heat treatments. The investment casting process has allowed for design innovations and the use of superalloys, which are difficult to forge and machine.

A good balance of strength and corrosion resistance is necessary for gas turbine buckets. The highest strength alloys are generally not used because of poor corrosion life. Nickel base alloys with 8-18 percent chromium are not as inherently corrosion resistant as cobalt base nozzle alloys with approximately 29 percent chromium. However, the strengths of the nickel base alloys are far superior, which is essential for bucket creep life.

The natural frequencies of gas turbine buckets are subject to excitation by periodic flow disturbances in the gas path. Periodic flow disturbances are coincident in number to the number of upstream or downstream nozzles, or number of combustion cans. Resonance of these periodic forces and bucket natural frequencies must be avoided at design point operation; however, resonance cannot be avoided at all speeds below design point. Effective vibration control is required to avoid bucket damage due to resonant excitation.

Three features are incorporated to suppress vibration: long shanks, tip shrouds, and axial damping pins. The shank serves as a tuning device to adjust bucket natural frequencies. Resonance of bucket and excitation frequencies can then be located in regions of transient operation. The shank also provides thermal isolation between the gas path and dovetail; this minimizes thermal gradients in the wheel, and thus minimizes stress concentrations in the dovetail area of the bucket and wheel.

The tip shroud which is incorporated on 2nd- and 3rd-stage buckets is a major vibration control feature. The tendency of buckets to untwist during operation, due to centrifugal load, forces adjacent shrouds to

form a tight knit band. This tip restraint minimizes stress due to vibration in the first flexural mode.

Damping is introduced to all buckets by placing axial damping pins underneath the platform at the split line between adjacent buckets. Centrifugal force causes the damping pin to contact the underside of the platforms of adjacent buckets simultaneously, thereby providing coulomb damping when there is relative motion.

The material for the turbine wheels is CrMoV, as is currently used in the MS7001E. The mechanical integrity of each wheel is established through proof testing, as well as by design analysis. Specifically, each wheel is spin-pit tested at a temperature which is less than its 50 percent fracture appearance transition temperature (FATT). The wheel is then brittle, and it would be expected to fail if serious flaws exist. Also, wheels are spun hot at sufficiently high speeds to plastically yield the bore at temperatures above FATT. Yielding produces a residual compressive stress at the bore, when the wheel is brought to rest. During subsequent operation in the machine, the residual compressive stress tends to offset the centrifugal tensil stress, thereby enhancing low-cycle fatigue life.

Certain rotor design features are incorporated in the flange-to-flange rotor that are intended to improve availability and maintainability. The axial constraining device used for the buckets is a maintenance feature which is used on the MS6001 turbine. A single retaining ring per stage fits into a circumferential groove in the buckets and rotor thereby constraining the buckets as shown in Figure 3.7. The ring provides simplicity in that one opeation releases the constraint of all buckets; i.e. the number of pieces inherent in a 'D' key or twist lock type of bucket restraint is reduced to one. Also, the possibility of losing a twist lock inside a machine during field replacement (and the possible damage that could result) is eliminated.

The 1st-stage bucket is field replaceable without removing the turbine shell. Instead, only the combustor wrapper and 1st-stage nozzle must be removed, thus providing access to the 1st-stage bucket retaining

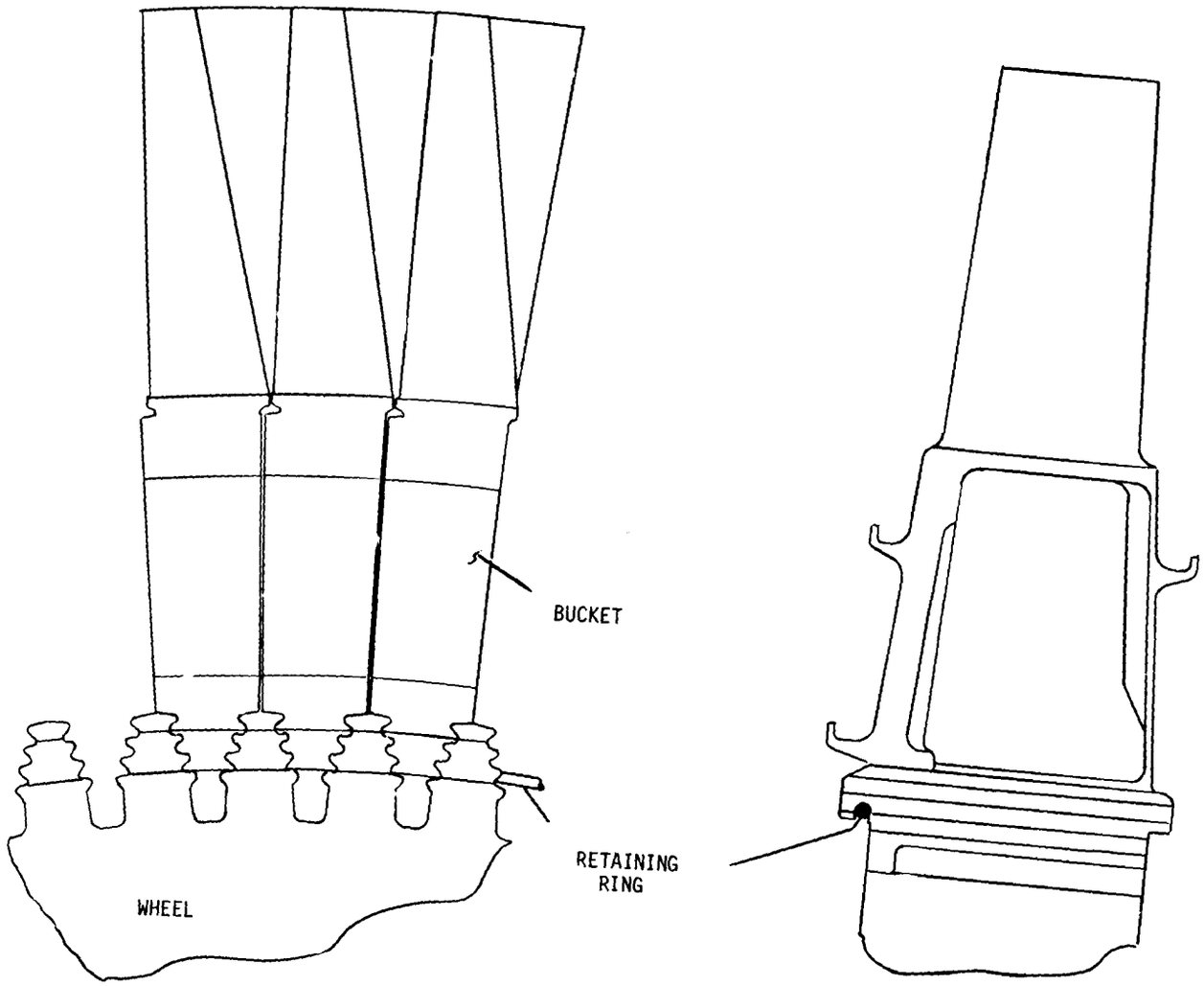

Figure 3.7: Bucket Retaining Device

ring. The buckets can be slid forward relative to the wheel and removed through the combustor housing, as illustrated in Figure 3.8.

The top half of the turbine shell and 3rd-stage nozzle segments in the lower half must be removed in order to remove the 2nd- and 3rd-stage buckets while the rotor is in the machine. The buckets of both the 2nd- and 3rd-stages have tip shrouds; therefore, all buckets of a stage must be moved axially in unison, relative to the wheel, until one bucket at a time can be pulled clear of the assembly dovetail first. Both stages of buckets must move in the direction of the vacated 3rd-stage nozzle for removal.

The forgings of the 1st- and 2nd-stage wheels are identical. The finished wheels have the same outside diameter and similar machining operations. This is consistent with present practice for MS6000 1st- and 2nd-stage wheels.

The aft turbine wheel shaft has a bore to provide access for boroscope inspection of the turbine wheels as shown in Figure 3.9. During operation this access bore would contain a removable plug which incorporates a 2nd- and 3rd-stage air distribution tube similar to the tube used in the MS7001E.

2. Nozzles

The 1st-stage turbine nozzle is the heavy fuel nozzle which is being developed for the MS7001E. This is an improved air cooled simply supported nozzle with gill and trailing edge cooling holes. It is also designed to have lower ballooning stresses and increased cooling capability. In addition, it is more crack tolerant.

The 2nd-stage nozzle is the long chord design which is also being developed for the MS7001E. It has the advantage of greatly reduced creep stress and therefore has greatly reduced potential for downstream deflection. To verify the magnitude of this reduction, instrumentation will be used that monitors nozzle deflection without removing the turbine shell. The 3rd-stage nozzle is the same one as used in the

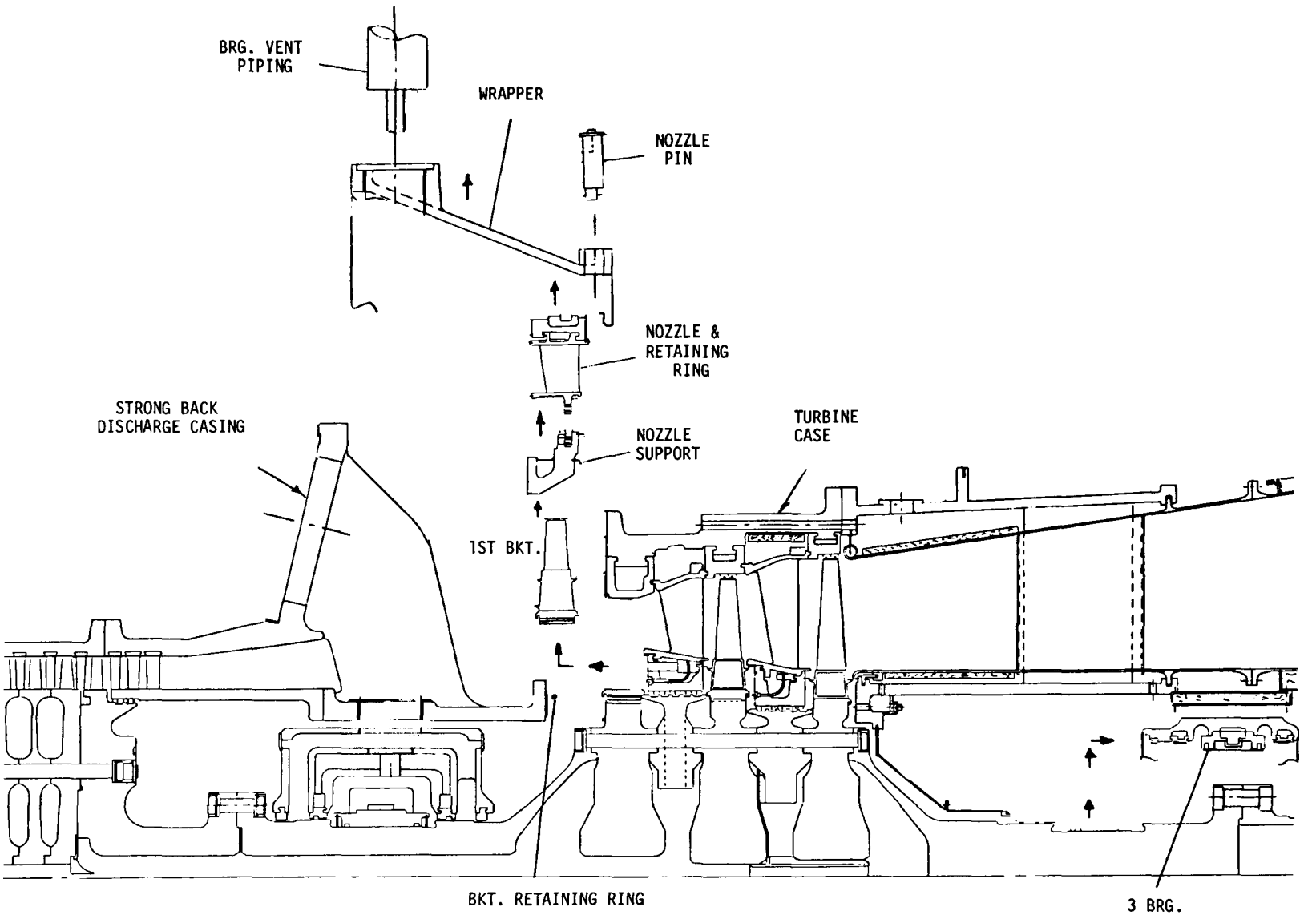

Figure 3.8: Disassembly of 1st Stage Nozzle & Buckets

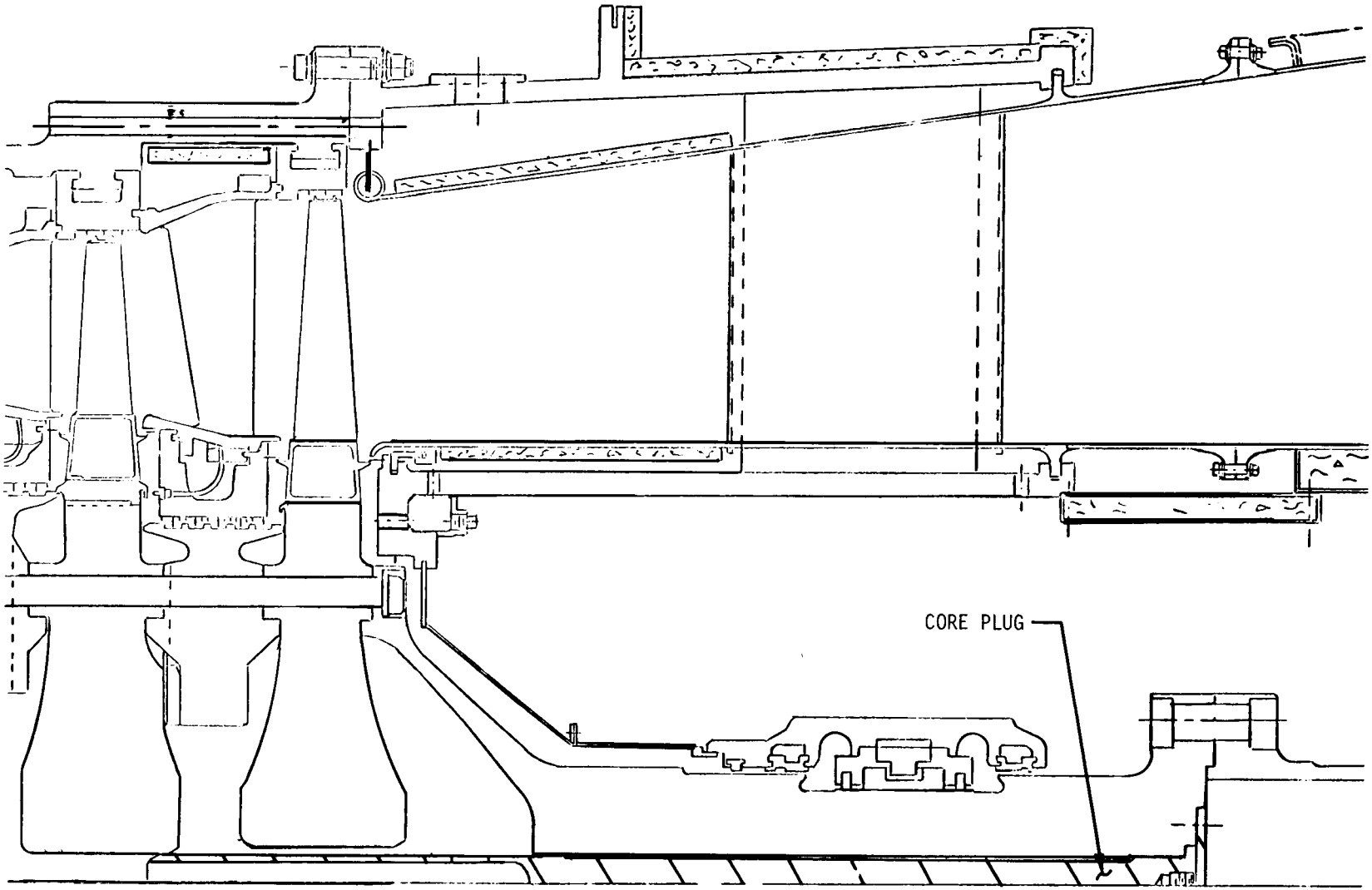

Figure 3.9: Aft Turbine Shaft Core Plug

current production MS7001E due to its excellent history of high reliability.

3. Shells, Casings and Supports

a. Turbine Shell

The turbine shell is an improved version of the current MS7001E. The following changes are recommended:

1. The shell is approximately 8.5 inches (216 mm) shorter as a result of mounting the 1st-stage nozzle in the combustion wrapper. Being a smaller part provides a potential for improved properties and lower cost.

2. Cooling of the aft portion of the shell (Figure 3.10) is changed from cast-in holes, (capable of handling the cooling flow requirements for the turbine shell and the exhaust frame), to drilled holes, (capable of handling the turbine shell cooling only). This is possible by reversing the cooling flow and is covered in the description of the exhaust frame. The reduction in hole size makes both respacing of the holes possible and the placement of holes closer to the horizontal joint with potentially improved roundness control of the shell. Also, these smaller holes permits a reduction in the cast diameter of the shell, which in combination with the shorter length results in about a 10 percent reduction in the shell weight.

3. The two manifolds and 42 pigtail connections, previously used for supplying cooling air to the turbine shell are eliminated because of the reverse flow arrangement. This greatly improves accessibility for boroscope inspection.

4. The 2nd- and 3rd-stage stationary shrouds are similar to the shrouds of the MS7001E 1st stage. This permits improved cooling of the turbine shell hooks and results in further weight reduction of the assembly.

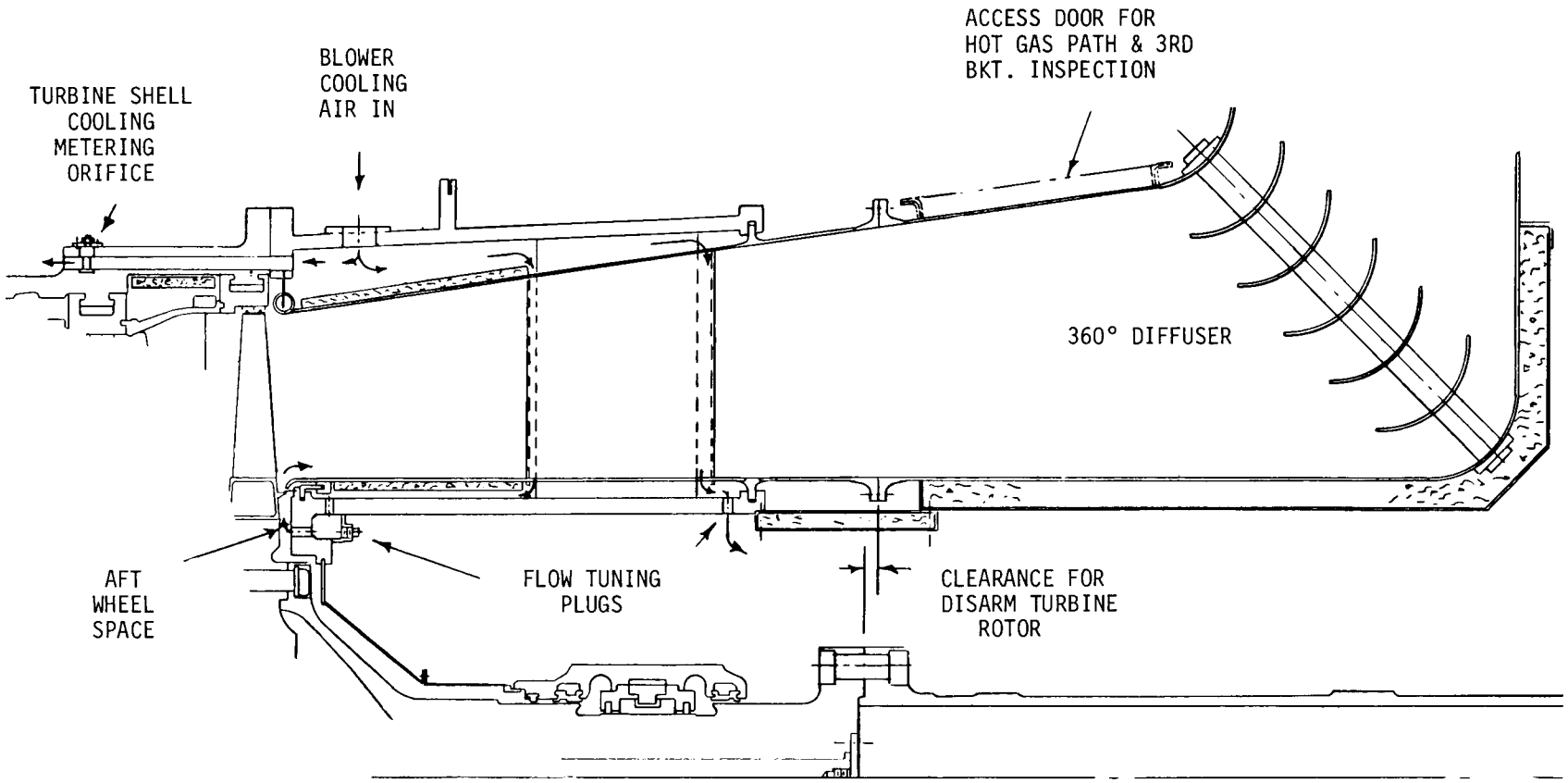

Figure 3.10: Exhaust Frame & Diffuser Details

b. Exhaust Frame and Diffuser

1. Cooling of the exhaust frame and turbine shell will continue to be by an off base blower but the routing of this air is improved (Figure 3.10). The air is fed into the exhaust frame by means of four ports in the outer barrel. Approximately a third of the air flows forward into the orificed holes in the turbine shell and discharges into the turbine compartment. The remainder of the air flows between the outer barrel and the exhaust diffuser and inward around the struts. At the inner barrel, the air again splits with half of the air going forward to provide 3rd-stage aft wheelspace cooling. The remaining air goes aft and exits through tunable openings into the load tunnel. The advantage of this arrangement is that the cooling air flow can be adjusted readily to suit the condition and application of the machine without major teardown.

2. The exhaust frame struts, and their fairings are aligned to match the hot gas swirl as it exits the 3rd stage bucket. This feature not only maximizes performance, but it also reduces exhaust noise and thus reduces the amount of silencing required.

3. The outer diffuser wall has a continuous cone contour which will be more durable and easier to maintain than the present staged design.

4. The aft section of the exhaust diffuser no longer has a horizontal split joint but will be a 360 degree section as shown in Figure 3.10. The vertical flange, which mates with the aft and the forward sections of the diffuser, is located sufficiently far aft to permit ready removal of the rotor without removal of this section of the diffuser. In addition, this flange will use through bolts rather than blind tapped holes. The use of a 360 degree section not only simplifies assembly and disassembly, but greatly reduces the potential for exhaust gases leaking into the load tunnel.

5. The load tunnel is desinged to provide a cooler environment for the #3 bearing; further, it provides improved accessibility to the bearing vibration sensor, to the 3rd-aft wheelspace thermocouples, and for tuning the 3rd-aft wheelspace cooling flow.

6. Use of #2 bearing seal leakage air for 3rd-aft wheelspace cooling is eliminated. Instead, the cooling air is taken entirely from the off-base blowers. This permits a better control of the cooling air flow rate, because it no longer depends on seal clearances; instead, local flow rate tuning is employed as illustrated in Figure 3.10. This tuning also permits flow to be adjusted to match the exhaust back pressure, which will vary depending on the cycle application. In addition, the potential for smoke formation due to an oil seal leak in the #2 bearing is eliminated.

c. Aft Support Leg

Excessive thermal growth of the aft support leg has been identified as a potential cause of misalignment between the gas turbine and the generator. The new design would therefore have the leg, and its associated cooling jacket, extended to a lower position on the base; or, it would have water cooling jackets added to the base.

3.1.4 Bearings

The rotor is mounted on three journal bearings similar to the MS7001E rotor.

A Kingsbury type floating pad thrust bearing is positioned forward of the number 1 journal bearing in the inlet housing. These two bearings are enclosed by a common bearing cap. This cap can be removed for journal inspection without removing the top half of the inlet housing.

The forward and mid-rotor journal bearings are elliptical; the aft bearing is a tilting pad bearing. The tilting pad bearing is tolerant of transient thermal growth misalignments which occur during startup, and such difficulties could lead to oil whip if an elliptical bearing were used at this position.

The improvements planned for each of the journal bearings are as follows:

1. The upper half of the #1 bearing is redesigned to improve ease of disassembly with the upper half of the inlet casing in place.

2. Insulation is added to the #2 bearing housing and drain pipe to reduce heat pick-up from their surroundings. Also, a scheme for increasing the oil flow would be incorporated. These actions will potentially improve seal life and clearance control. In addition, the #2 bearing incorporates an unsubmerged drain rather than a separate vent. This arrangement works successfully on the MS9001, and it has the advantage of not requiring potentially troublesome precipitators on the vent.

3. The ears that support the #3 bearing housing are increased in axial width to reduce potential misalignment which could result from expansion and contraction of the oil drain pipe. Note that the redesign of the exhaust frame and diffuser readily permits the #3 bearing cap to be removed without removal of the top half of the exhaust frame.

3.1.5 Maintenance and Service Features

1. Gas Turbine Cleaning

Eight water nozzles are located on the inner cone of the inlet casing for washing the compressor blading. Washing the turbine hot gas parts is accomplished by supplying water through the atomizing air nozzle at the head of the combustor. After shutdown, the internal turbine parts are cooled to set limits prior to cleaning.

Abrasive cleaning of the compressor is accomplished by an automatic hopper which feeds nutshells or rice into the inlet plenum. This can be accomplished while the turbine is in operation.

The hot gas path abrasive cleaning utilizes pnuematically activated nozzles mounted on the wrapper which will inject the abrasive through the last dilution hole in each combustion liner. This can also be accomplished while the turbine is in operation.

2. Maintenance And Inspection

All of the previously discussed design improvements are intended to reduce maintenance downtime. Figure 3.11 illustrates how the #1 bearing cap, and the journal and thrust bearings (and associated seals) can be removed and inspected without lifting the top half of the inlet casing or without a major teardown.

Figure 3.11 also illustrates almost complete access to the compressor rotor for major inspection or for cleaning by removal of the compressor casings only. As mentioned earlier, this is achieved by relocating the aft casing to discharge casing flange; the relocation was itself a practical solution because of the shortened combustor. In addition, the extraction piping is routed in the lower half to avoid additional disassembly.

Figure 3.12 illustrates how each combustor and its associated transition pieces can be removed through their individual openings in the compressor discharge casing bulkhead. By not having to remove the transition pieces through a limited number of openings in the combustion wrapper, inspection and replacement time cycles should be greatly reduced.

Including the mounting of the 1st-stage nozzle in the combustion wrapper greatly facilitates removal of the 1st-stage nozzle for repair or replacement, as illustrated in Figure 3.8. In addition, this arrangement permits the rotor-in-place removal of the 1st-stage buckets without removal of the turbine shell.

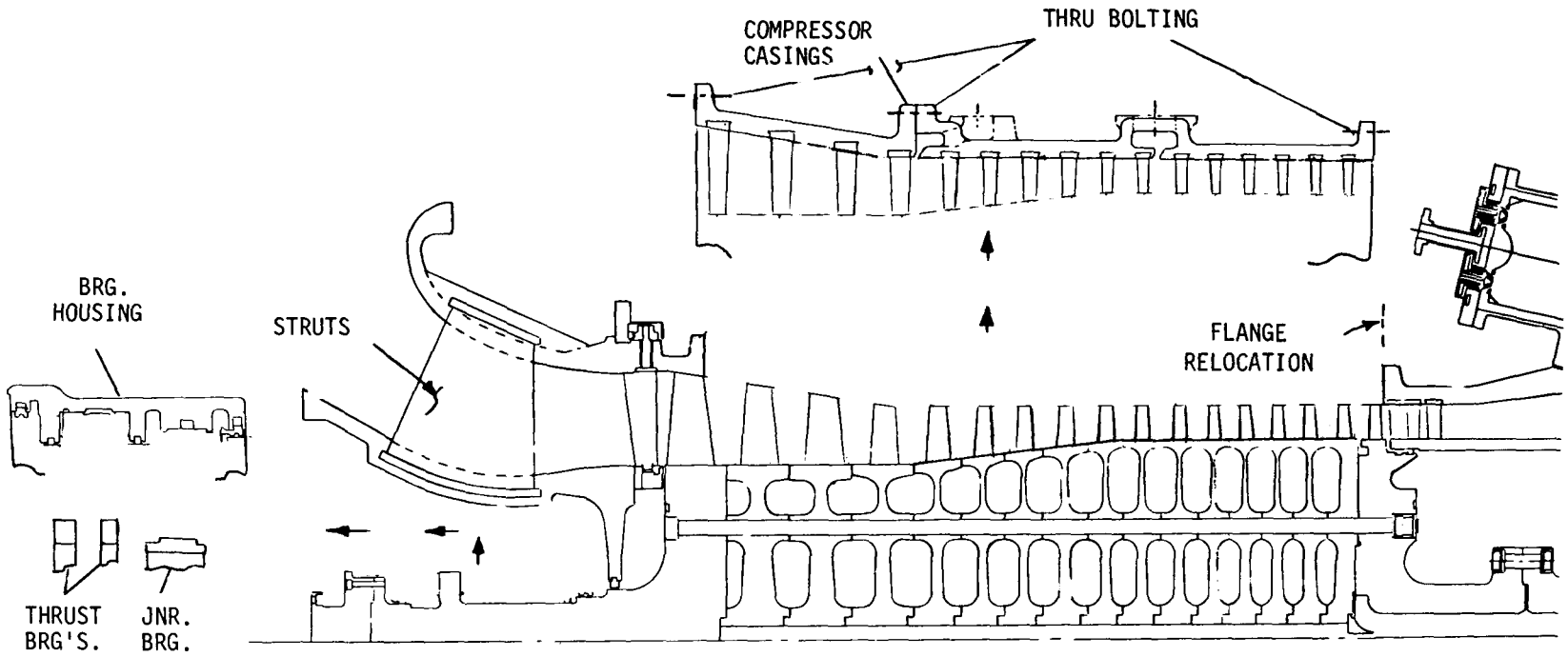

Figure 3.11: Disassembly of Compressor Casing & Bearings

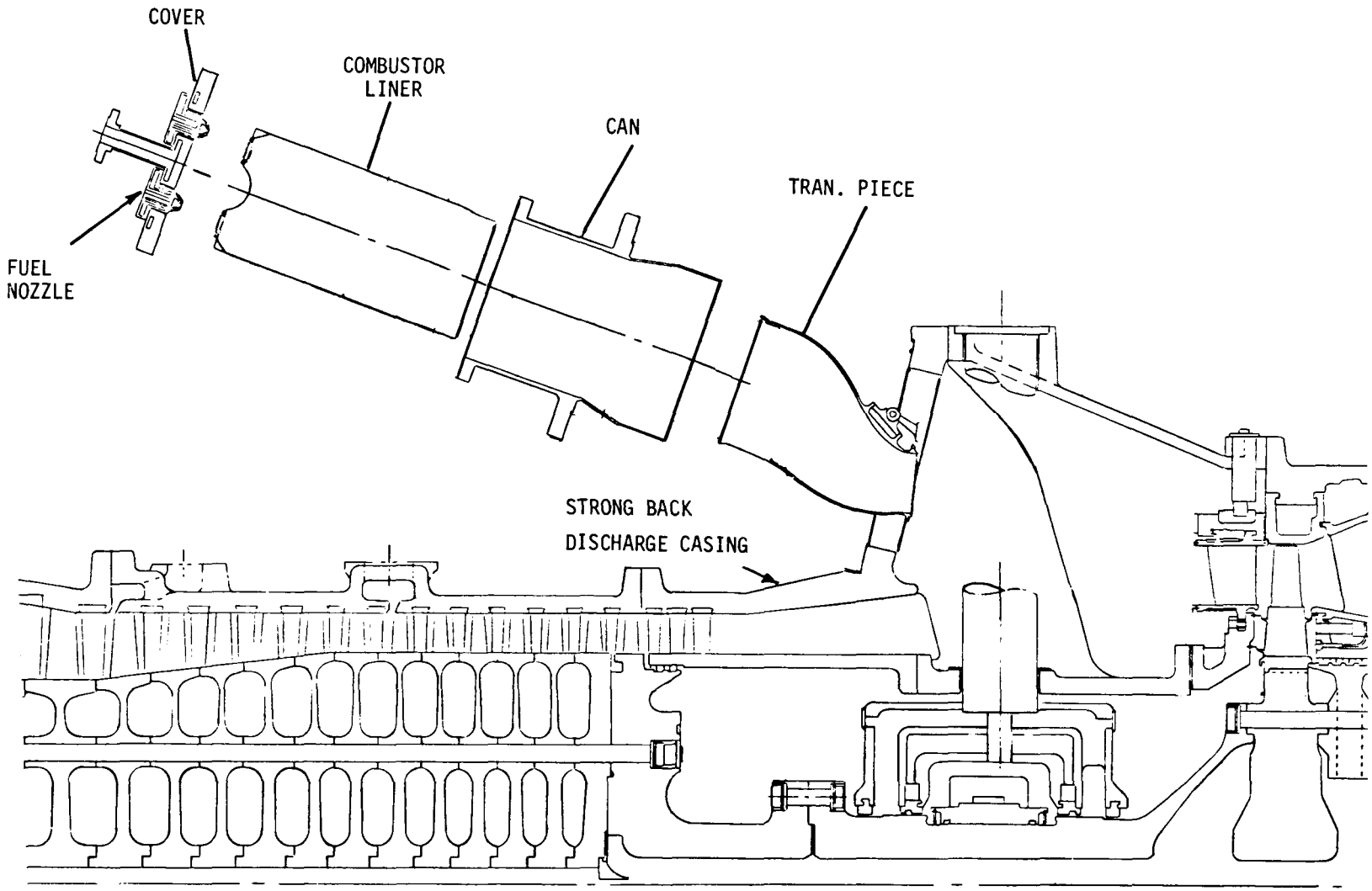

Figure 3.12: Disassembly of Combustion System

Figure 3.8 also illustrates the ability to remove the #3 bearing cap without lifting the exhaust frame, for inspection of the bearing and its associated seals.

Through-bolting, using 12 point nuts and bolts, is used wherever physically possible. Attempts will be made to keep the variations in lengths and sizes of these bolts to a minimum for inventory purposes.

By minimizing requirements for disassembly, the machine permits the maximum amount of inspection of critical hardware in the least amount of time.

Boroscope inspection holes are provided in five compressor stages and for each turbine stage. These permit inspection of the intermediate compressor stages and complete leading and trailing edge inspection of all of the turbine buckets. Also, limited inspection of the nozzles is possible. A rigid 10 mm (.4 inch) boroscope would be used; the method of access through the turbine shell is illustrated in Figure 3.13.

Eddy current inspection holes are provided for each turbine stage. By means of a collapsable eddy current probe with an attached boroscope, it is possible to evaluate all buckets at their trailing edges for potentially harmful cracks.

Nozzle deflection holes are provided at the downstream side of the 2nd and 3rd stage nozzles. These holes permit routine measurement of the distance between the trailing edge of the nozzle inner endwall and the platform of the downstream bucket. By means of these measurements, a time-deflection history can be established for these cantilevered nozzles. This history, in conjunction with established deflection limits, can be used for advanced planning of possible corrective action.

If additional inspection of the 1st-stage nozzle is desired, it can be readily performed by removal of the combustion covers and liners. For still greater visibility, only the additional removal of the combustion cans and transition pieces is required.

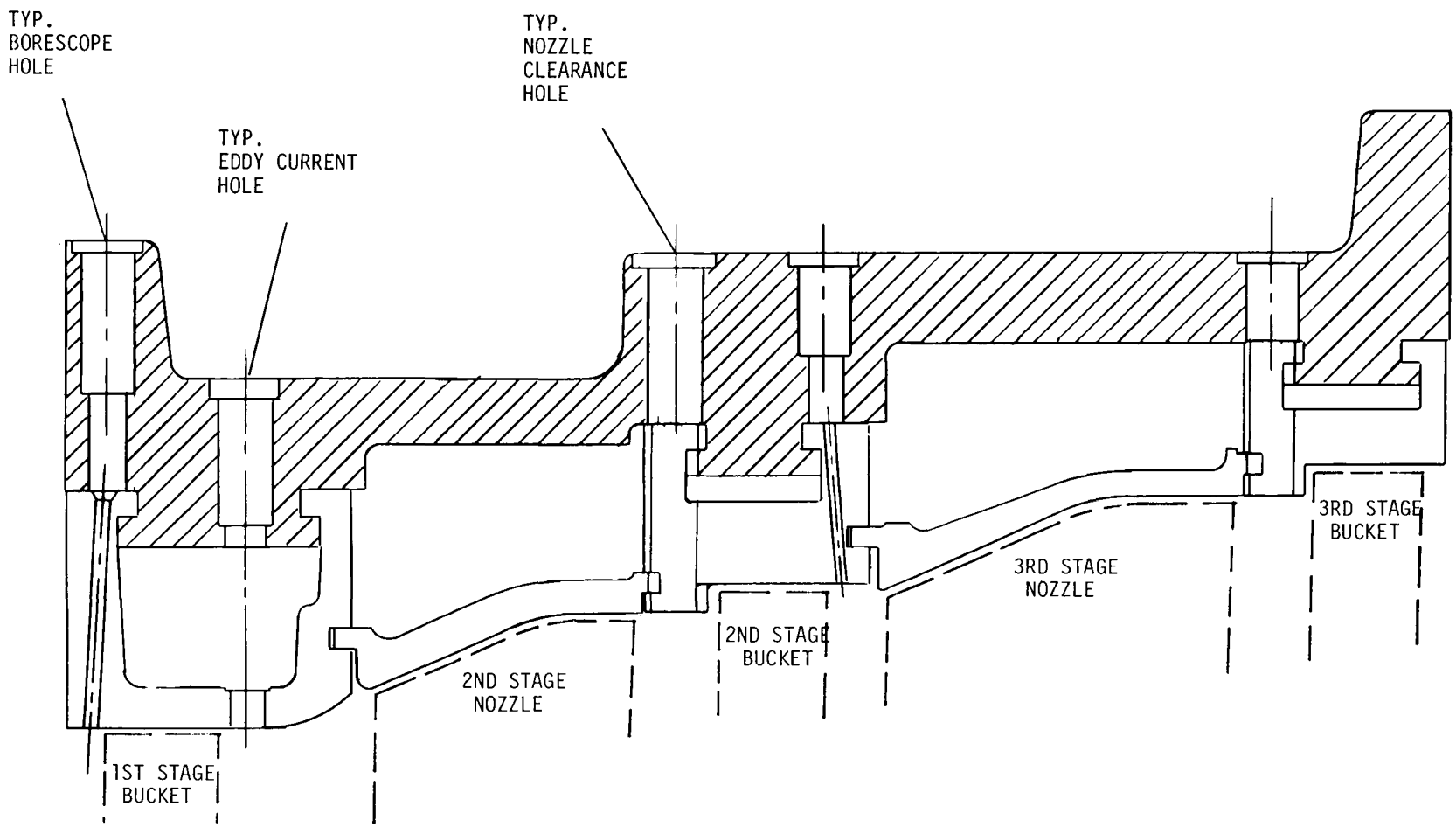

Figure 3.13: Turbine Hot Gas Path Inspection

If additional inspection of the 3rd-stage bucket is desired, access to the trailing edge can be obtained through an access door in the exhaust diffuser. The minimum radial height of 16 inches (406 mm) at the bucket exit provides sufficient head room for direct observation.

3.1.6 Heat Balance Diagram and Cooling Flows

1. Heat Balance Diagram

The Task 1 and 2 tradeoffs indicated that for high reliability the cycle should be fired at 1985°F (1085°C) with a 12:1 pressure ratio and air cooled. Accordingly, the Task 3 new centerline design is based on the MS7001E machine with all available baseload options and fixed fleet retrofits and further design improvements discussed throughout Task 3.0.

The steam side consists of both high level and low level portions. The high level portion supplies throttle steam at 1015 PSIA (6998 kPa) and 950°F (510°C). This steam is expanded down to the crossover pressure, where the exhaust of the high pressure section of the steam turbine is ducted to the low pressure section. The low level portion of the steam side supplies energy for deaeration and steam for admission, via the flash tank. This admission steam and the high pressure section exhaust steam are mixed and then further expanded down to the condenser pressure of 2.5 inch hg (8.465 kPa).

The overall plant performance is based on the outputs of four gas turbines and one steam turbine. The heat rate is based on the fuel consumed by the gas turbines and plant output. A summary of the gross plant performance can be found below. The heat balance diagram is shown in Figure 3.14 which includes the effects of auxiliary losses.

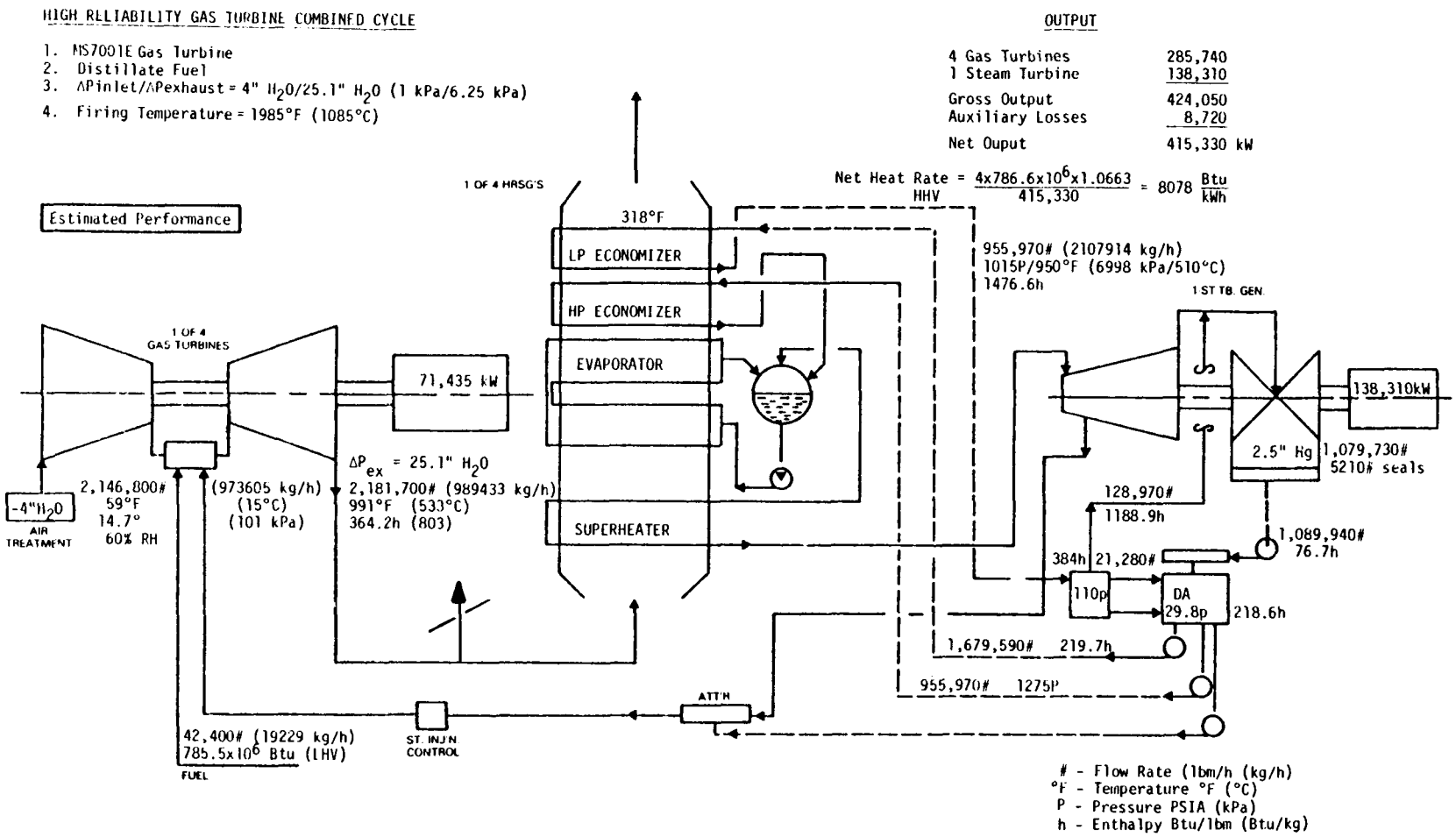

Figure 3.14: Heat Balance Diagram

Performance For Distillate Fuel

	GROSS OUTPUT MW	GROSS HEAT RATE (HHV) Btu/kWh
Simple Cycle	71.4	11740
Combined Cycle (STAG 400)	424.1	7910

2. Cooling Flows

In Task 2.0 turbine cooling was accomplished by various combinations of air, water and steam. Figure 3.15 recaps the gas turbine cooling mechanisms used in the Task 2.0 tradeoffs. As can be seen, air cooling is supplied by the compressor and introduced throughout the turbine. Some of the cases substituted water cooling in the nozzles via a closed water coolant loop. This loop picks up heat in the nozzles and rejects it to an alternate loop to produce steam in the flash tank. Steam supplied from the steam turbine is used for cooling the nozzles and buckets in the cases with steam cooled blading.

Cooling flows were set to maintain maximum turbine metal temperatures of 1000°F (538°C) for water cooling and 1610°F (877°C) for air and steam cooling. Average temperatures are somewhat lower than these values so as not to exceed these maximum temperatures.

Figure 3.16 is an example of an all air cooled cycle which is being used for the Task 3.0 centerline design. Cooling flow paths are shown for the bearings, casings and the various stages throughout the turbine.

3.2 Gas Turbine Accessories

The mechanical accessories include starting lubricating oil, cooling water, atomizing air, fuel handling, fire protection systems. Because of the numerous functional parts and assemblies interfacing between the

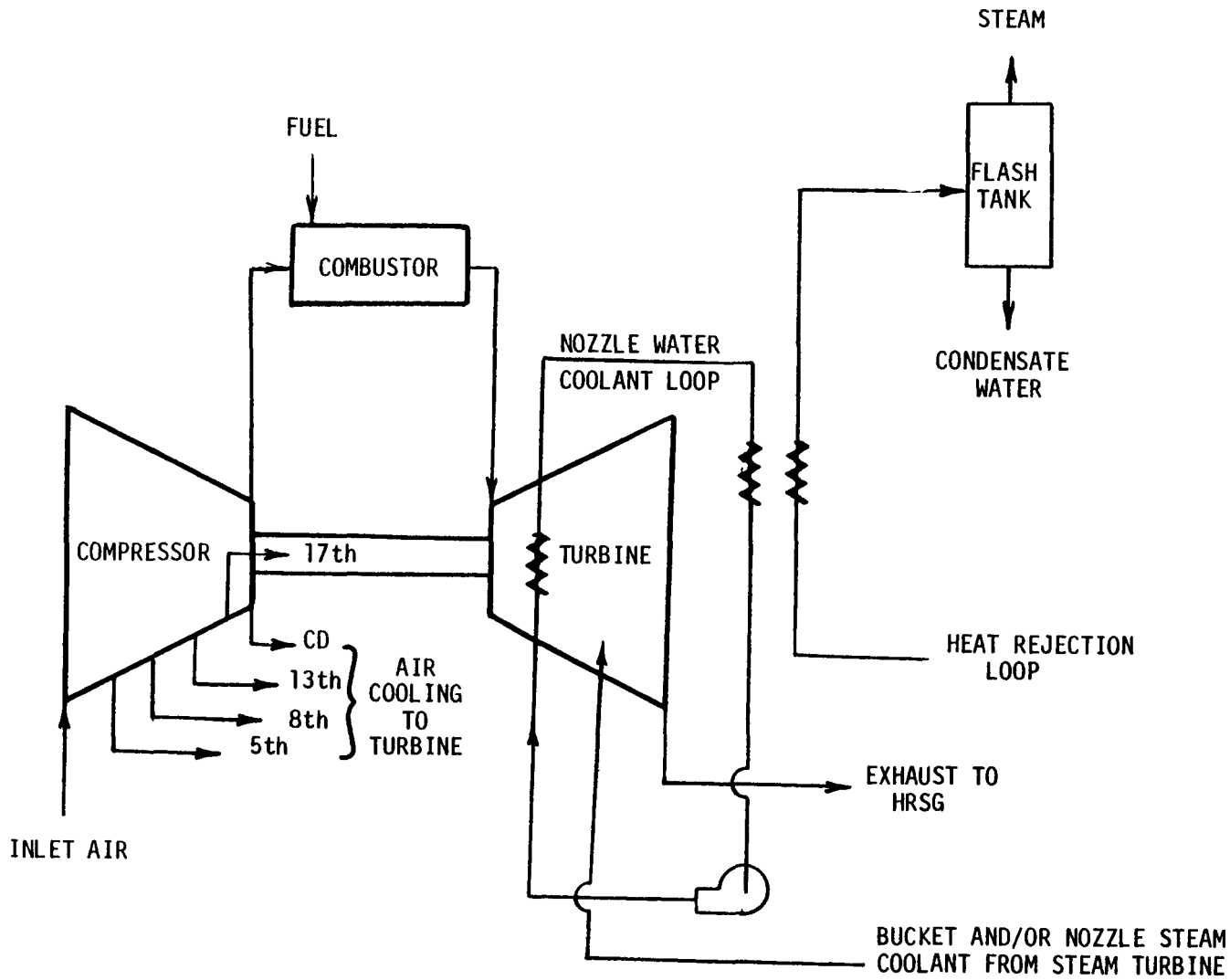

Figure 3.15: General Cooling Flow Diagram

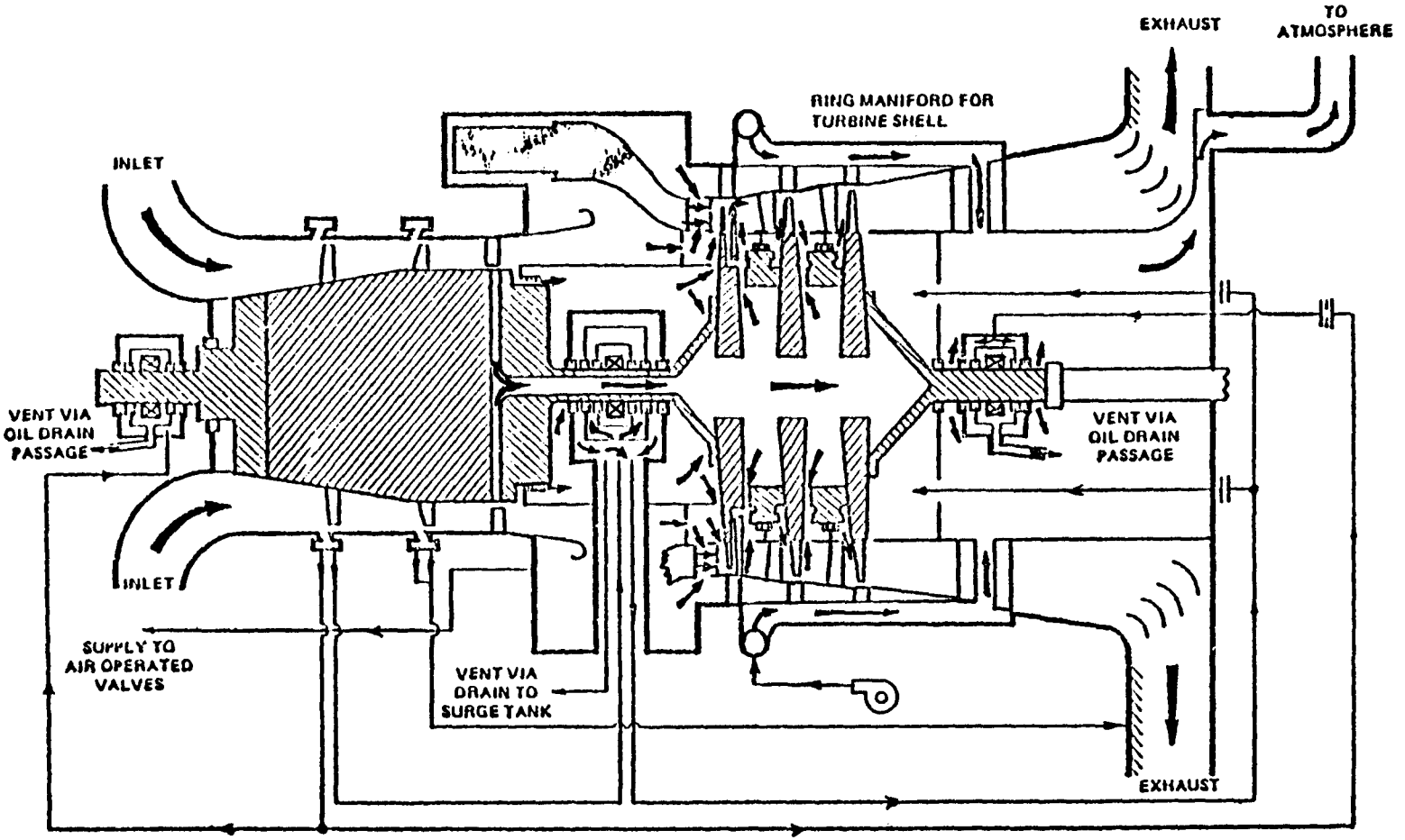

Figure 3.16: Schematic of Air Cooled Machine

mechanical accessories and the gas turbine, it is critical that the accessory systems be designed so as to provide a reliable configuration.

The task of developing a new, highly reliable centerline machine was undertaken utilizing the failure rates developed under Tasks 1 and 2 as the starting point. The key requirements for this new design configuration are high reliability and fuels flexibility (distillate and heavy fuels) for a machine in baseload service. The starting point for this new design is the present market offering for baseload application. This configuration incorporates chosen design changes found to be cost effective in Task 2 (identified as Configuration 2, or Cases 5 and 6).

Since Configuration 2 did not attain the EPRI Reliability Targets, efforts were initiated to identify major design improvements which could improve the overall reliability. Two such areas which were found to be cost effective and would improve reliability were in the exhaust system and the fuel forwarding skid. The exhaust system change consisted of strengthening the ducting to increase cycle life. The fuel forwarding skid change consisted of incorporating dual forwarding pumps and other components. Configuration 3 (Case 30 and 31) reflects incorporation of these changes. However, Configuration 3 still did not quite meet the EPRI Reliability Targets. The task of identifying areas of potential reliability improvements was resumed at a more detailed level than was previously attempted. During this investigation it became increasingly clear that further reliability improvements must be achieved through redesign of systems to reduce the sensitivity to single point failure of small components.

This was accomplished in the fuel and atomizing air areas by elimination of components such as the fuel pump clutch, and trip devices. On the lube oil system where trip protective devices can not be eliminated. Reliability improvements were attained through the use of redundant devices and confirmatory control logic. Redundant pumps were utilized on the cooling water system to upgrade system reliability.

Configuration 4 (Case 32 and 33) incorporates these design changes and reflects a significant level of effort in investigating system designs at a detailed level. Configuration 4 meets most of the EPRI Targets and is being presented as the new centerline machine.

The overall configuration of the new centerline machine is similar to the machines in our existing product line. The various accessory systems are primarily contained in a totally enclosed (lagged) accessory base located upstream of the turbine base. The accessory base includes an accessory gear box which is connected to the gas turbine inlet flange via an accessory coupling. The starting system drives through the accessory gear to start the gas turbine. Auxiliary gear driven shafts in the accessory gear drive pumps and compressors in the other accessory systems. The accessory base structure form the lubricating oil reservoir. Components weights of the accessory systems are listed in Table 3.3. An overall plant configuration locating the accessory systems is illustrated in Figure 3.17.

A more detailed description of several of the accessory systems is given in the following sections.

3.2.1 Atomizing Air System

The purpose of the atomizing air system is to provide compressed air at the fuel nozzles to efficiently atomize the liquid fuel as it is sprayed into the combustion chambers. Figure 3.18 shows a typical conceptual schematic.

The atomizing air system extracts pressurized air from the compressor casing in the turbine compartment. This air is then piped through a dirt separator to remove particulate matter which might be entrained in the airstream. Downstream of the dirt separator the air passes through a shell and tube type heat exchanger located in the turbine base which reduces the temperature of the extraction air. A temperature switch is provided downstream of the heat exchanger which provides an alarm signal when the air temperature rises above a preset value alerting the operator to a possible cooling water system malfunction. Downstream

Table 3.3

Overall Simple Cycle Machine Weights

Accessory Systems

COMPONENT	Lbs.	Kg
Turbine Compartment	278000	126099
Accessory Compartment	105000	47627
Controls Compartment	48000	21772
Inlet Compartment	76000	34473
Inlet Ducting	88000	39916
Exhaust Ducting	180000	81647
Fuel Forwarding Module	12000	5443
Off Base Fire Protection Module	11000	4990
Water Injection Skid	9000	4082
1000 KVA Cranking Transformer	6100	2767
Generator Compartment	267000	121110
Generator H_2 Supply & CO_2 Compartment	3500	1588
Off Base Cooling Module	66600	30209
Switchgear Compartment	16000	7257
Excitation Compartment	15830	7180
1000 KVA Auxiliary Transformer	6100	2767
Oil Separator-Oil Tank Vent	5000	2268
	1193130	541195

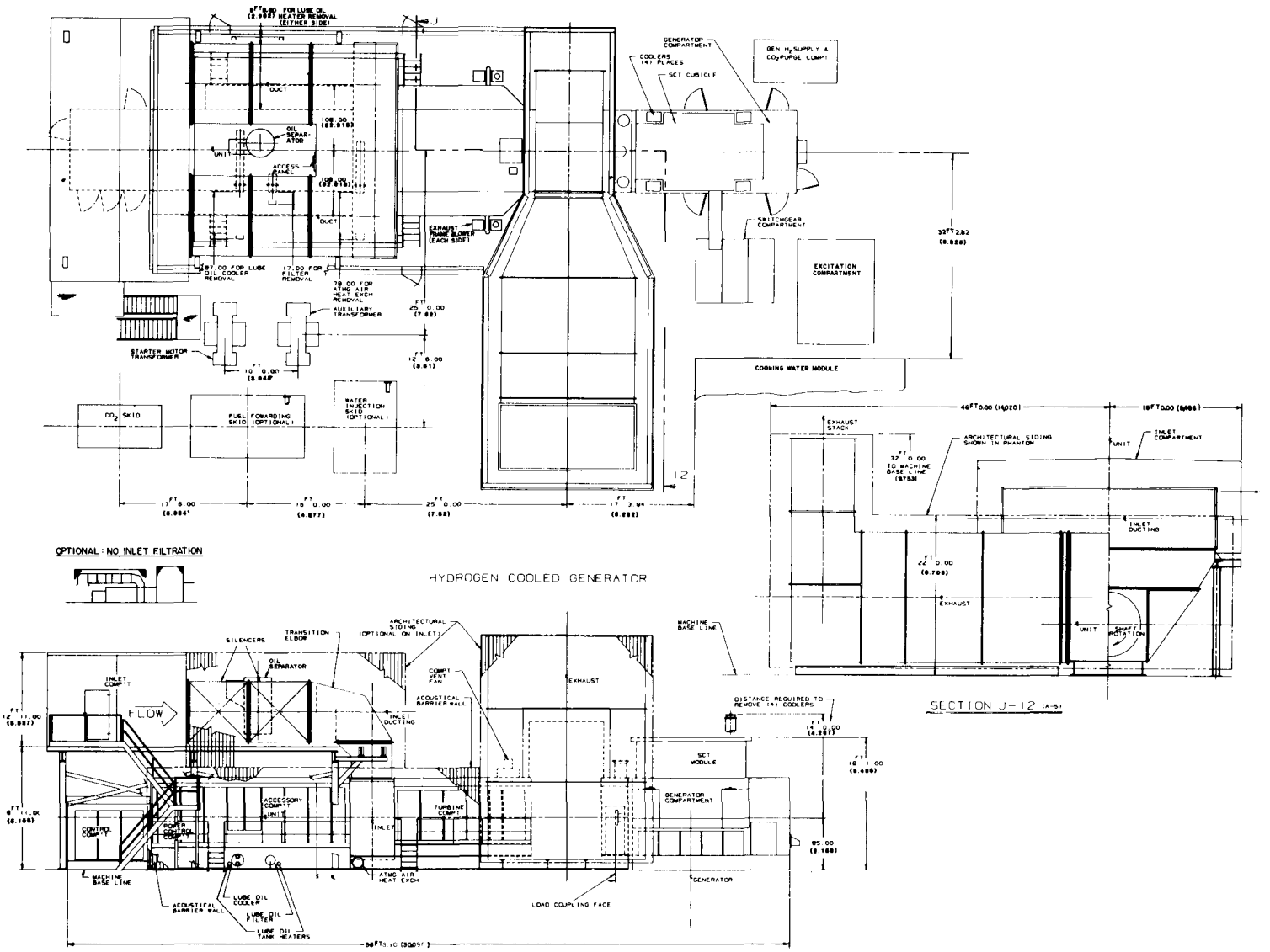

Figure 3.17: Overall Gas Turbine Configurations
Dimensions in ft-in (meter)

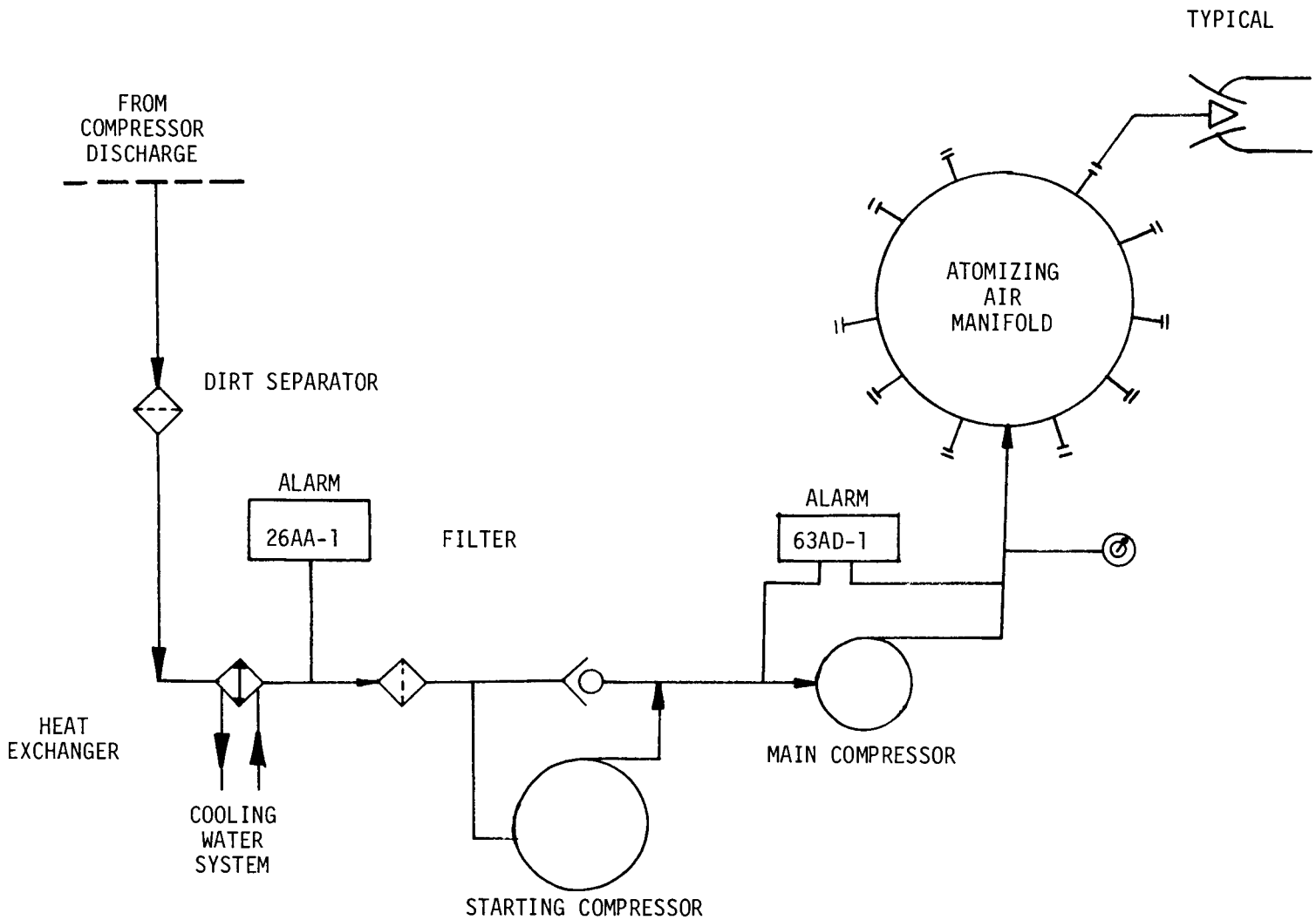

Figure 3.18: Atomizing Air System

of the temperature switch, the extraction air passes through a media filter to remove any particulate matter that may pass through the dirt separator. The purpose of the media filter is to protect the compressors and fuel nozzles. Downstream of the media filter, the air is piped to the main compressor. The main compressor is a centrifugal compressor which is driven by an auxiliary shaft on the accessory gear. Upstream of the main compressor, there is an electric motor driven, positive displacement, starting compressor. The starting compressor is connected in a parallel arrangement and pressurizes the atomizing air during startup until the main compressor reaches normal operating speed. A differential pressure switch is connected across the suction and discharge of the main compressor and gives an alarm signal when the main compressor does not achieve the proper pressure ratio. A pressure gauge is also connected at the main compressor discharge to permit the operator to check the discharge pressure periodically and upon alarm. From the main compressor, the pressurized atomizing air is piped to the turbine compartment and to the atomizing air manifold. The atomizing air manifold distributes the atomizing air evenly between the individual combustion chambers.

Reliability Improvement

The reliability of the atomizing air system has been improved by the elimination of trip function devices. The remaining devices provide only an alarm function to alert the operator of an abnormal condition. The addition of a media filter upstream of the compressors also improves reliability by preventing foreign matter in the air stream from entering the compressor or the fuel nozzles.

Elimination of this system was considered as a potential reliability improvement for a new centerline machine but the concept was discarded because the use of pressure atomization was determined to be impractical with heavy fuels and may have detrimental effects on NOx reduction efforts.

3.2.2 Fuel System

The liquid fuel system consists of off base and on base equipment which provides the hardware necessary to forward the fuel from the fuel storage tanks to the gas turbine, and regulate the flow to the combustion chambers. For distillate fuel applications, the off base equipment consists of a fuel forwarding skid which includes dual electric motor driven forwarding pumps with isolation valves to permit maintenance to be performed on one pump while the other is operating. The liquid fuel flows from the forwarding skid to the accessory base through interconnecting piping. For heavy fuel applications, additional equipment must be provided to condition the heavy fuel (residual or crude). Although the extent of conditioning equipment required depends on the contamination level of the specific fuel, typical equipment would be as described in Section 2.10.2.

The on-base portion of the fuel system receives the fuel from the forwarding skid and filters, pressurizes and regulates the fuel flow to the combustion fuel nozzles. Figure 3.19 shows a conceptual schematic of the on-base system. Dual low pressure filters are provided to filter the liquid fuel coming from the fuel forwarding skid. A transfer valve is provided to permit transfer from one filter to the other during operation. A differential pressure gauge is connected across the filter arrangement so that the condition of the filter arrangement is monitored. An hydraulically operated fuel stop valve is provided downstream of the low pressure filters to prevent flow of liquid fuel through the system during shutdown and is capable of rapidly securing fuel flow in case of an emergency trip. The liquid fuel is pressurized for delivery to the fuel nozzles by a screw type positive displacement main fuel pump. The main fuel pump is shaft driven and directly coupled to an auxiliary shaft in the accessory gear. The main fuel pump is stainless steel and has independently lubricated bearings. A hydraulically operated bypass valve and bypass piping loop is provided around the main fuel pump. This arrangement regulates the net main fuel pump output flow to match the gas turbine fuel demand. A high pressure filter is provided downstream of the main fuel pump to protect the flow divider and prevent foreign particles from entering the fuel

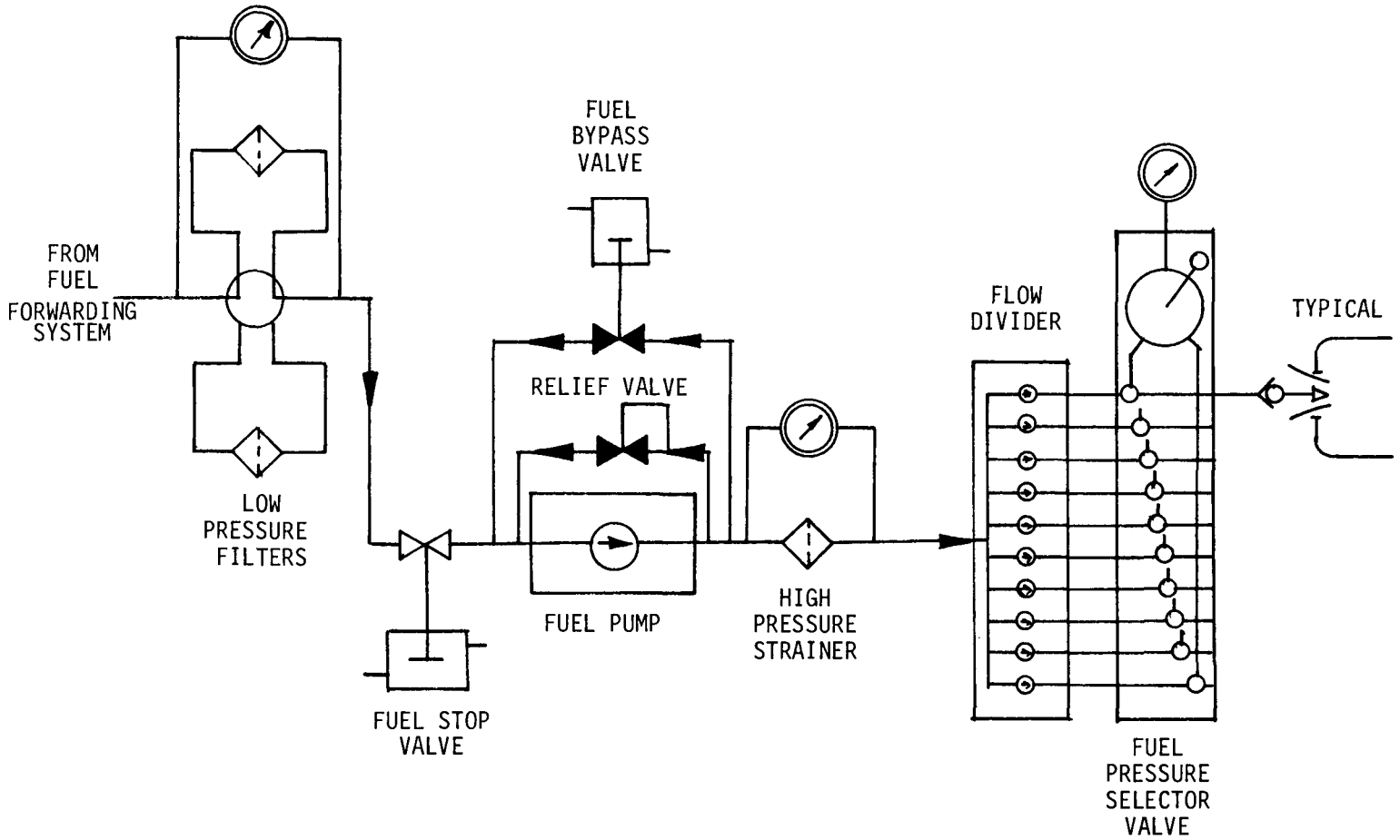

Figure 3.19: Liquid Fuel System

nozzles in case of a failure in the main fuel pump. A differential pressure gauge is provided to permit reading the pressure drop across the filter. A stainless steel rotary element flow divider is installed downstream of the high pressure filter. The flow divider distributes the fuel flow evenly between the ten combustion fuel nozzles. The fuel pressure to each fuel nozzle can be read on a single pressure gauge by selecting the desired position on the multi-position selector valve. All fuel piping is stainless steel which eliminates the need to change out piping for heavy fuel applications. In addition, the recently modified and now standard main fuel pump and stainless steel flow divider are suitable for heavy fuel applications.

Reliability Improvement

Reliability improvements which were made in the fuel system include: elimination of all trip pressure switches, use of a screw type main fuel pump with independently lubricated bearings, an improved stainless steel flow divider, elimination of the fuel pump clutch and dual low pressure filters.

The use of pressure flow division was considered as a more reliable alternative to the rotary flow divider; however, pressure flow division was not found to be feasible for heavy fuels. Therefore, this concept was discarded. The concept of off base dual motor driven fuel pumps was considered but also discarded. It was not found to be cost effective due to the relatively high cost of the off base equipment versus the low failure rate of the gear driven main fuel pump.

3.2.3 Cooling Water System

A self-contained, closed loop, pressurized cooling water system is supplied to provide the necessary heat dissipation for the lubricating oil system, the atomizing air pre-cooler, the turbine support legs and the hydrogen cooled generator. The system consists of modular water to air heat exchangers mounted on an off base skid. Each module contains multiple fans driven by double extended shaft A.C. electric motors which force air over finned tube heat exchangers. Depending on the

specific site ambient range and heat rejection requirements the number of modules necessary may vary. Dual AC motor driven cooling water pumps on the skid pressurize the cooling water and deliver it to the components to be cooled.

Reliability Improvement

The reliability of the cooling water system is improved by the dual pump arrangement which is provided with isolation valves which permit maintenance to be performed on one pump while the other continues to operate. Each cooling module is also designed so that a single fan motor can be shut down for maintenance without interrupting system operation. Also, because of the modular concept, individual radiators can be secured to perform maintenance operations.

3.2.4 Lubricating System

The lubricating system provides oil flow to lubricate the turbine and generator bearings and other mechanical accessories during start-up, self-sustaining operation, and shutdown Figure 3.20 shows a conceptual schematic. A lubricating oil reservior is built into the accessory base structure. The various lube oil pumps transfer oil from the reservoir through heat exchangers, filters, and a pressure regulating valve to a header which distributes the oil to the individual bearings. Lube oil returns to the reservoir via gravity drains. The main lube oil pump is a shaft driven positive displacement gear pump which is driven by an accessory shaft on the accessory gear. The discharge pressure of the main pump is controlled to a constant level by a relief valve which recirculates excess oil flow to the reservoir. A separate AC motor driven centrifugal auxiliary full size pump is provided to supply the required oil flow during start-up and serve as a backup for the main lube oil pump. The main pump has a high reliability record; and the auxiliary pump provides a 100 percent backup in case the main pump does not develop the required flow rate. In addition, a separate DC electric motor driven centrifugal emergency pump is provided which is capable of supplying adequate oil flow to prevent bearing failure during shutdown and cool down if both of the other pumps fail. Since

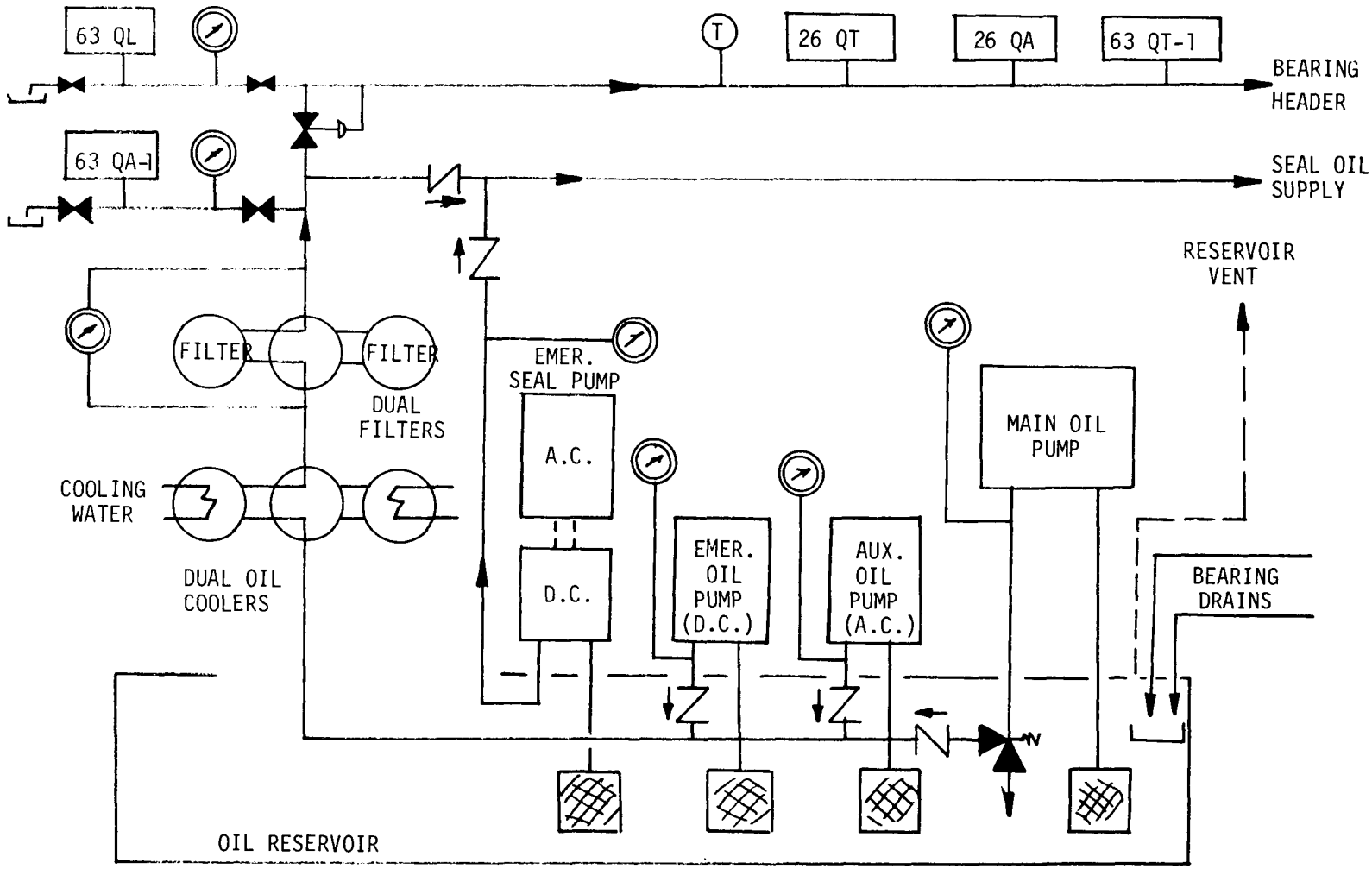

Figure 3.20: Lube Oil System

the generator will be hydrogen cooled and requires seal oil to prevent hydrogen leakage past the bearing seals, a separate AC/DC piggyback electric motor driven emergency seal oil pump is also provided as a third backup source of seal oil flow. The AC/DC piggy-back pump is adequate for this application since it does not normally operate.

Dual lube oil heat exchangers are provided downstream of the common lube oil pump discharge header to dissipate heat absorbed by the lubricating oil from the bearings. A transfer valve is provided to permit one heat exchanger to be isolated for maintenance while the other is operating. Dual full flow filters are located downstream of the heat exchangers. The filters employ replaceable pleated paper filter cartridges to remove particulate matter from the oil and are interconnected via a transfer valve similar to the heat exchangers. A differential pressure gauge is connected across the filter. A seal oil supply header branches off downstream of the filters to provide seal oil to the generator. Lubricating oil flow to the main bearing header is regulated by a pressue regulating valve. Individual pressure gauges are provided to permit monitoring the discharge pressure of each of the pumps. Two pressure switches (63QA-1 and 63QL) are connected downstream of the filters to sense header pressure and start the auxiliary or emergency lube oil pumps if lube oil header pressure drops below a preset value. The first signal would be an alarm concurrent with auxiliary lube oil pump start. The second signal would be a unit trip and emergency lube oil pump start. A supplementary pressure switch (63QT-1) is provided in the bearing header to confirm the trip signal before a trip would be initiated. Pressure gauges and isolation valves are provided to permit testing of the pressure switches while the gas turbine is operating. Two temperatures switches (26QA and 26QT) are installed in the bearing header to monitor bearing header oil temperature. If the oil temperature increases above a preset level an alarm is sounded to alert the operator. If the oil temeperature continues to increase to a second level, the machine would be tripped to protect the bearings. The control logic would compare the signals from the two temperature switches before initiating a machine trip to guard against spurrious trips. A direct reading thermometer is provided so the oil temperature can be monitored upon an alarm.

Reliability Improvement

Incorporation of a separate full size AC motor driven auxiliary pump, dual heat exchangers and dual filters provide reliability improvements for the lube oil system. Also the use of redundant pressure and temperature switch protective control logic improves reliability by greatly reducing the change of a spurious trip. Upon receipt of an alarm the operator will be able to investigate the abnormal condition and determine if a device has failed.

3.2.5 Load System

The load system consists primarily of the hydrogen cooled generator driven by the gas turbine. Although the detailed design specifications will have to be developed at a later date, some basic characteristics can be described. The generator is a totally enclosed module utilizing hydrogen gas as a cooling medium. The internal cooling system is completely self contained with cooling water heat exchangers and fans to circulate the hydrogen gas. The totally enclosed hydrogen-cooled design prevents the entrance of dirt and moisture to the interior of the generator. The separately excited rotating field, driven by the gas turbine, is supported by oil lubricated bearings located in the end shields mounted on the generator frame. The generator would be designed to operate continuously under baseload conditions, delivering power from the armature terminals. Design provisions are included for maintaining hydrogen pressure and purity, and for supply of cooling water and lubricating oil. Temperature detectors and other devices are provided for monitoring winding and hydrogen temperatures and hydrogen pressure and purity.

Reliability Improvement

The primary improvement in reliability is the result of the sealed cooling system inherent with the hydrogen cooled generator design. A sealed cooling system prevents environmental contaminants from entering the generator intervals.

3.2.6 Starting System

The starting system consists of drive equipment to bring the unit to self sustaining speed during the start-up cycle. The starting power is provided by an AC electric starting motor which is mounted on a steel pedestal on the accessory base. The output shaft of the starting motor is coupled to a hydraulic torque converter which converts the motor output power into the torque required to bring the unit up to speed. The torque converter output shaft is coupled to the unit shaft through an accessory gearbox which provides auxiliary drive shafts to operate the main fuel pump, lubricating oil pump, and atomizing air compressor while the unit is running. After the unit reaches self sustaining speed, the starting motor is decoupled from the accessory gear at the torque converter and shut down.

Reliability Improvement

The reliability of the starting system has been improved by the use of an improved starting sequence which eliminates spurious starting sequence failures. The use of a variable vane hydraulic torque converter which is capable of turning the rotor at varying speeds for startup and eliminates the need for a jaw clutch and also improves the overall reliability of the starting system.

3.2.7 Fire Protection System

The fire protection system consists of an off-base CO_2 storage system, interconnecting piping, and discharge nozzles and fire detectors in the turbine accessory and load compartments. Figure 3.21 shows a conceptual schematic. The off-base CO_2 storage system is a package design which includes low pressure CO_2 storage tanks and control equipment and valves which release the CO_2 to the discharge nozzles. The fire protection system is functionally split into two separate zones. Zone 1 includes the accessory, turbine and load shaft compartments. Zone 2 includes the #3 bearing tunnel in the exhaust area. Discharge of CO_2 is controlled by eight fire detectors (45FA-1, -2; 45FT-1, -2, -3, -7, -8, -9) which sense temperature. When a fire detector is triggered,

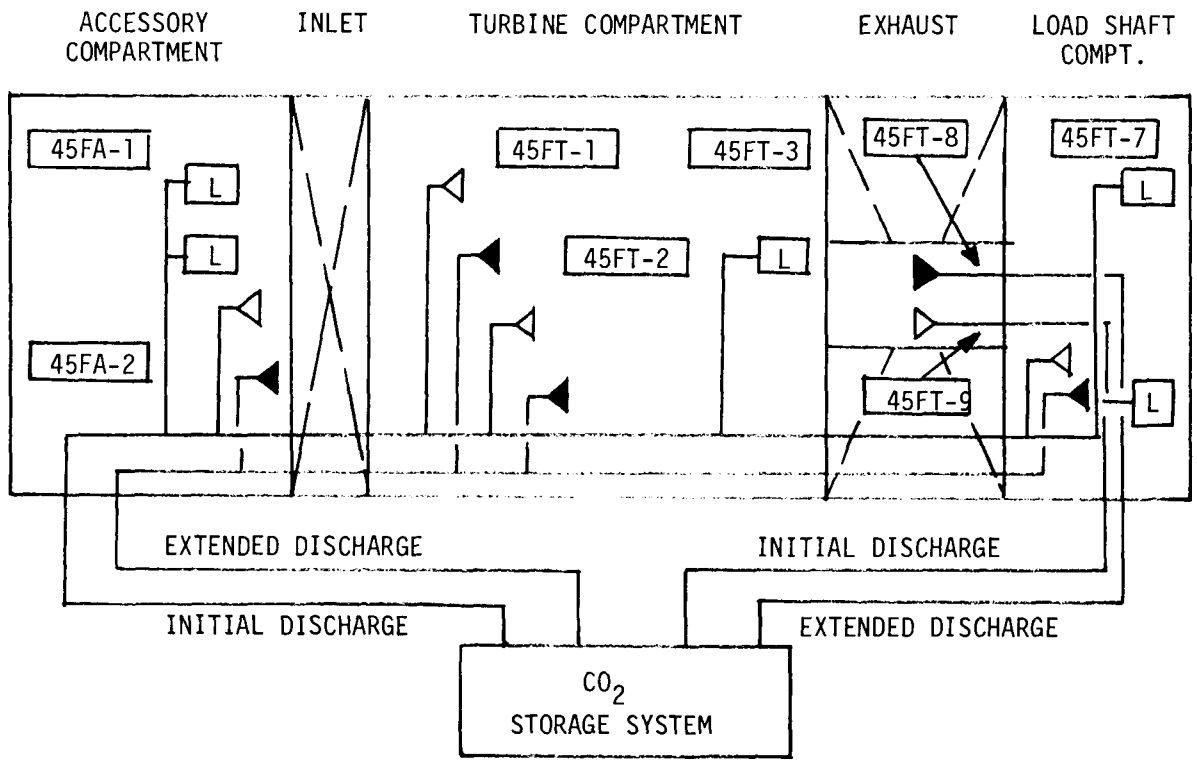

Figure 3.21: Fire Protection System

the unit is tripped, an alarm is sounded, and CO_2 is discharged into the compartments to a non-combustible concentration (initial discharge). The CO_2 also actuates ventilation dampers to the closed position to seal off the compartments. After the initial discharge, the CO_2 concentration is maintained by a second extended discharge which makes up for any leakage past lagging seals and penetrations, until surface temperatures have cooled below the ignition temperature of lube oil (approximately 450°F, 232°C).

Reliability Improvement

The fire protection system has been simplified by reducing the number of detectors from twelve to eight. One detector has been eliminated in the accessory compartment and three detectors have been eliminated in the turbine compartment. This simplification and a recent upgrading of the detectors themselves, will improve the system reliability. However, a much more significant improvement in reliability should be realized by a change to the interconnecting wiring. Nearly all of the forced outages attributable to the fire protection system are caused by degradation of the interconnecting wiring in the hot environment which results in spurrious trips and premature release of CO_2. The new design incorporates wiring runs which are external to the compartments thereby avoiding the previous wiring degradation problems.

3.3 Combined-Cycle Plant Controls

Introduction

For efficient operation of a STAG plant, operator control panels are provided in a central control room to enable a single operator to start, stop, and load the plant with the support of a roving operator. In general, controls are provided for each major unit, gas turbines, generators, heat recovery steam generators, steam turbine and auxiliaries, which have automatic start, stop, control, and protection along with remote manual capability. In addition, a plant master control can be provided which allows plant start, stop, and control from a single station within the central control room. Protection is

provided to alarm an abnormal condition, and if necessary, to trip only the required unit such that a maximum of power generation equipment remains on line.

Design objectives of STAG Control Systems are:

1. Minimize plant startup time consistent with cyclic damage criteria to assure long service life.

2. Minimize operator work load.

3. Alarm impending trouble in sufficient time to allow operator restoration to normal conditions or protect equipment automatically if insufficient time is available.

4. Make plant status information readily available to the operator under all conditions.

5. Give a maximum of operating flexibility to the operator.

6. Provide capability for achieving minimum heat rate under all loading conditions.

The hierarchy of controls for a combined-cycle plant is illustrated in Figure 3.22. The Plant Master Control, load control and protection are independent functions which receive information and operate through the unit level controls. Once the permissives are satisfied, control of the plant can be assigned to the top level and operations conducted from the plant level control station. Under plant automatic control, minimum time safe startup can be achieved and operating mode change accomplished with a minimum of operator action. Each control function is fully explained in Section 3.3.

3.3.1 Plant Level Controls

1. Introduction

The top level of combined-cycle plant control hierarchy consists of a plant master control, a plant load control and the plant protective

Figure 3.22: Combined-Cycle Control Hierarchy

system. These systems enable an operator to start, run and stop the plant from a single location within the central control room once having brought the units through standby and ready conditions. From this location, he can start and stop individual units, add units to the partially running plant, or take units off line to improve part load efficiency. He may also run the plant in simple cycle mode from this location. Through the plant load control, he can command automatic balancing of the load between gas turbine units or can enter a plant load set point and command the plant to automatically seek this load. A plant level protective system causes needed protective action to occur directly in a unit due to action taken within another unit rather than let process upset condition propagate themselves.

2. Plant Master Control

The plant master control system provides a central control location for plant automatic operation and display of plant status. It is designed to work with and through the unit level controls to coordinate plant status changes automatically. Using the plant master control, the operator may select the equipment to be included from a start or stop diagram and specify the order in which the equipment is to start or stop. As part of the plant master control, plant status information is displayed on a Cathode Ray Tube (CRT) to enable the operator to monitor the equipment standby and ready-to-start conditions as well as the operational status of major equipment. In this way, a single control room operator can startup, operate, and shutdown the power generation equipment with the assistance of a roving operator for general plant surveillance. The plant master control directs the power generation equipment through an orderly program of commands to the unit level controls which feedback status information. The plant master control will effect changes in operational states in the minimum time consistent with equipment constraints.

The plant master control also provides a means for the operator to change the operational state of the plant through selective start and stop programs. The master control can be programmed to start any available unit or combination of units to couple with units already in

operation. Thus, a gas turbine running in simple-cycle mode can be converted to combined-cycle operation by starting its boiler or another gas turbine HRSG combination can be added to those already on line. Shutdowns can also be accomplished in a similar manner to reduce plant output. The automatic stop sequences initiated by the operator result in equipment remaining in a condition which permits the fastest restart. The display informs the operator of each unit's readiness to start by displaying the standby and ready status of devices or groups of devices and whether the unit has been selected for plant master control. The unit will not respond to operator commands at the plant master control unless selected and ready.

3. Plant Load Control

The plant load control is designed to provide control of plant output from a single point in the central control room - normally adjacent to the plant master control. The plant load control provides the operator with manual control of the gas turbine speed/load setpoints or base or peak selection. Optionally, it provides automatic closed loop control of the station output and automatic load balance among the gas turbine generators. Since the steam turbine is always used to follow the gas turbines, no direct or independent control of steam turbine is provided. The plant load control is designed for flexibility of operations and is independent of the plant master control. The operator selects those units which are to participate in load control. Only the selected units will respond. Participating units will respond to a plant raise or lower command at the normal gas turbine loading rate. Under setpoint control, plant output will seek the operator selected power level and, when output matches the setpoint, an indicator light is illuminated. Since it is desirable that the steam conditions at the boiler outlets be matched, an automatic balance for gas turbine outputs can be selected by the operator. Balanced output of the selected gas turbines is also indicated by a light.

Suitable meters, and indicator lights are provided to indicate status and individual unit output and combined output to the operator.

The plant load control may easily be interfaced with an automatic loac dispatch system. Interface can provide analog representation of generated power, unit by unit or selected totals, and discrete representation of unit status.

4. Plant Protective System

The unit level control systems contain sensors and logic which detect, alarm, and if necessary, trip to protect at the unit level. Certain additional protective actions are taken at the plant level to protect one unit from actions occurring within another before allowing process upset to be detected within the indirectly affected unit.

3.3.2 Unit Level Controls

1. Introduction

Each major STAG unit incorporates a complete unit level control which has the capability to start, stop, protect, and control the programmed operations of that unit. Each has an operator panel from which the operator may initiate automatic mode change or exert remote manual control of the individual devices to the extent provided. Displays are provided which indicate the operating mode of the unit and the status of the unit with a combination of lights, meters or alpha-numerical indicators. Each unit level control automatically senses the state of unit components to determine readiness to start and will not accept operator auto start commands unless all readiness conditions are satisfied. Stop sequences revert status to a condition enabling most rapid start. Alarm and protective features are incorporated in each unit to enable operator restorative action or to automatically protect the equipment should conditions require that action. Plant protective design will cause appropriate unit action should abnormal conditions occur in another unit.

2. Gas Turbine Unit Level Control

Each gas turbine is controlled by its own unit level control which receives mode command and setpoint SPEEDTRONIC commands either from the

operator through a remote operator panel (in the central control room) or from a plant master control or plant load control. The unit level control consists functionally of the following essential portions:

Control System	-	Performs all gas turbine control functions during normal conditions.
Sequential System	-	Provides the logic needed for operation of the gas turbine accessory equipment and control interlocks during startup and shutdown.
Protection System	-	Contains problems and informs operators of trouble location backing up normal controls.
Power Supply	-	Furnishes power essential to all control with sequential and protective functions.

Control System - The control system function is primarily to control turbine speed or load throughout all normal operations and secondly to control air flow in order to maintain high exhaust temperatures at part load operation to optimize combined-cycle heat rate. The control system normally prevents:

- Excessive rates of change of metal temperature.
- Overtemperature of hot gas path parts.
- Overspeed of turbine rate.
- Excessive compressor pressure ratio.

Sequential System - Sequencing the gas turbine requires the integration of the accessories, starting means, and turbine itself, through event or time driven logic for permissives to start, logical change during acceleration to initial load, and normal shutdown. Abnormal conditions are detected. All required sensors or detectors such as speed threshold, and interval timers are included.

Protection System - The protective system detects conditions which are abnormal and alarms these for operator action. If conditions warrant, immediate, corrective action is taken automatically. Through the use of redundant sensors, the fundamental detection of overtemperature, overspeed, vibration, or loss of flame, indicating loss of control of the gas turbine is used to bring the turbine down to prevent further damage or hazard. Signal processing or direct hydromechanical action is taken by means independent of normal sequencing or control systems.

Power Supply - Raw power from a 128V station battery is converted through highly reliable AC-DC converters to furnish all voltage levels required by the gas turbine controls. Strict discipline in wiring levels, power consumption levels, grounding, signal and power level return, etc. is exercised to assure the integrity of power distribution.

3. HRSG Unit Level Control

Each Heat Recovery Steam Generator is controlled by its own unit level control called Steam Generator Control (SGC). It has the capability to start, stop, control, and protect the boiler automatically or manually by operator action through the operator panel located in the central control room. The operator controls and displays are placed on a panel next to the gas turbine controls and displays with which that boiler is associated. Boiler control strategy is based on limiting rates of change of pressure and temperature to reduce cyclic damage in the boiler itself or steam header and steam turbine depending on which criteria is most restrictive in the current operation of the unit and remainder of the plant.

The steam generator control is used to achieve rapid starts, minimize cyclic damage, minimize waste of treated water, and shutdown in condition to permit most rapid restart:

Feedwater Control

The feedwater control, operating in conjunction with other interactions, serves to regulate the water level within the HRSG drum. During

startup the drum water level is initially depressed to help contain the drum level surge that takes place when steaming is initiated in the evaporator. When significant steam production occurs, with the drum level transients contained, the feedwater control system restores the drum level to normal. The position of the feedwater valve is controlled by a three element controller which senses drum level as well as steam and feedwater flow rates.

Thermal Rate Restraint Control

Based on the continuously measured HRSG drum water temperature at the time the READY condition was initially confirmed, (with the pre-programmed temperature restraint schedule contained within the restraint control memory), the individual HRSG thermal rate restraint control establishes the limiting rate of temperature change for each HRSG drum.

The restraint control also provides a prestart initializing temperature to establish whether the HRSG is pressurized as an input in determining the appropriate startup program.

Operational Mode Control

Confirmation that the unit is in a READY to start status is provided by this functional system. The initializing temperature together with the start sequence command determine the starting operation program to be executed upon receiving a START command. Under program control the unit's steam pressure is increased as rapidly as possible, staying within restraint limitations, to minimize startup time. The vents and drains are throttled and subsequently closed automatically to minimize water wastage.

Damper Control

The damper control function serves to establish the heat flux admitted to the HRSG through the manipulation of the gas turbine exhaust bypass and isolation dampers. The temperature rate limit is the primary unit restraint that establishes the maximum starting rate capability. The

associated low value gate will provide additional unit or cycle overriding restrictions based on unit flow generation, drum level, or steam turbine load rate limitations.

4. Steam Turbine Unit Level Control

The steam turbine has its own unit level control called the Steam Turbine Control (STC). It has the capability to start, stop, control, and protect the steam turbine automatically or manually by operator action through the control panel on the steam cycle panel in the central control room. The operator is provided a set of pushbuttons, lights, meters and alphanumeric indicators to accept discrete or mode change commands and indicate mode status and discrete operating parameters of the steam turbine. The STC controls in the manner indicated below to achieve rapid starts, minimize cyclic damage and shutdown in a condition to permit most rapid restart.

Pressure Control

The high pressure (HP) inlet and low pressure (LP) admission steam pressure is controlled during startup, loading and unload, and steady state operations. During the startup phase the HP control will maintain a predetermined HP header "floor pressure" level by modulating the HP bypass valve to pass steam to the turbine condenser. The LP control establishes a fixed LP level by modulating the LP bypass valve to also pass LP steam to the condenser.

The turbine is started using HP steam flow. When adequate HP inlet steam generation has been established, as determined by the position of the HP bypass valve, startup of the steam turbine is initiated. During the steam turbine starting cycle the available HP bypass steam flow will be reduced. As HP steam flow to the turbine is substantially increased during the turbine loading phase the bypass valve will close at which point HP control will be transferred to the turbine HP admission control at the established "floor pressure" level. As steam flow to the turbine is increased, the HP Admission Control will cause the turbine inlet control valves to open further while maintaining the

header pressure at the "floor pressure" level. When the HP inlet steam control valves approach their nearly wide open position, the HP Pressure Control setpoint is adjusted to maintain a predetermined inlet valve position so that the turbine can accept additional steam flow, while maintaining pressure control, until full flow capability is achieved by the turbine. Should a rapid drop in steam flow occur; e.g. a gas turbine trip, the HP control will cause the turbine inlet control valves to close in a manner that will reduce the HP header pressure at a predetermined controlled rate to avoid excessive temperature rates and drum level surging. The turbine control valves will subsequently return to their nearly wide open position, at a corresponding lower HP steam header pressure, provided sufficient steam flow remains to maintain HP header pressure above the minimum "floor pressure" level.

The admission of LP steam into the turbine is enabled after the HP bypass valve closes and the turbine is operating on HP control. The programmed admission of LP steam flow is accomplished by opening the LP Admission Control valve at a controlled rate diverting LP steam flow from the LP bypass into the turbine. When the LP bypass valve closes pressure control is transferred to the turbine LP admission valve at the initially established fixed pressure level.

Restraint Control

The restraint control establishes the allowable temperature ramp rate of the steam turbine. Contained within the restraint control memory are cyclic damage algorithms which establish the turbine acceleration, hold, and loading rate program as a function of initial temperature conditions at the time the START command is received. The starting program is fundamentally a function of the metal temperature excursion to be incurred, ie: the cycle damage algorithms calculate a particular acceleration and load profile based on acutal temperatures measured in the machine during that particlar start restraint control is intended to limit cycle life expenditure by establishing an acceleration and load profile as a function of temperature profile in the machine.

During the initial loading phase, with the HP bypass valve open, the loading rate is controlled by opening the turbine inlet valves on a

controlled basis. When the HP bypass closes, the turbine is in a "following mode" under HP pressure control. Turbine load control in this mode is transferred to the active HRSG unit damper control which establishes a steam generation rate to correspond with the predetermined turbine loading rate.

Operational Mode Control

Confirmation that the unit is properly initialized and ready to start is provided by this functional system.

Also included are integration of turbine starting and operational restraint programs together with system and operator interface control functions such as unit Start, Hold, and Stop commands.

3.3.3 Gas Turbine Control

1. SPEEDTRONIC

The gas turbine control is based around the SPEEDTRONIC control system. This system provides the gas turbine control and protective functions and provides many of the command signals to the Motor Control Center and generator control panel. Control features are assigned as illustrated in Figure 3.23.

The philosophy maintained during the control design process is to keep the turbine operating if conditions are safe. The control system functions shown in Figures 3.24, 3.27, 3.28 are to keep the turbine operating within the design operating limits. The protection system functions to detect, report, and take corrective action when operation beyond the operating limits occur. Alarms are used to indicate that the design operating limits have been exceeded, or that a control device has failed, but the operation of the turbine is still safe. It is intended that corrective action be taken in response to the alarm. This restores the turbine and controls to their proper operating conditions. Should conditions deteriorate further, the alarm is followed by a turbine shutdown or trip depending on the severity.

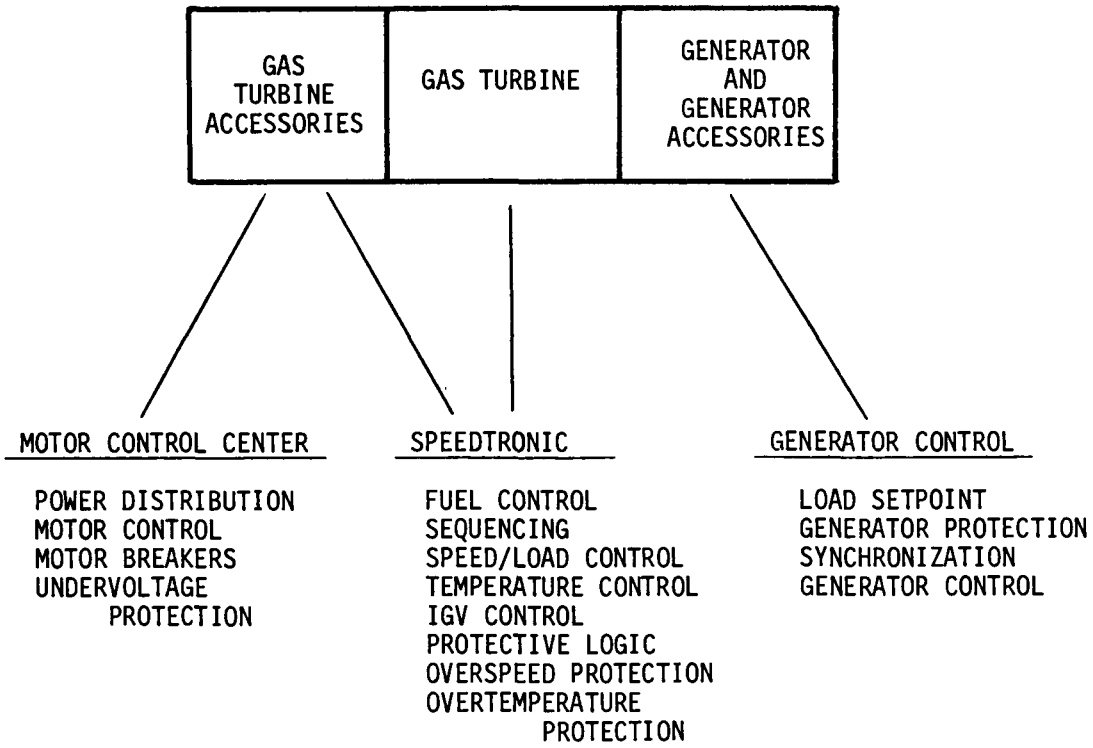

Figure 3.23: Gas Turbine-Generator Control

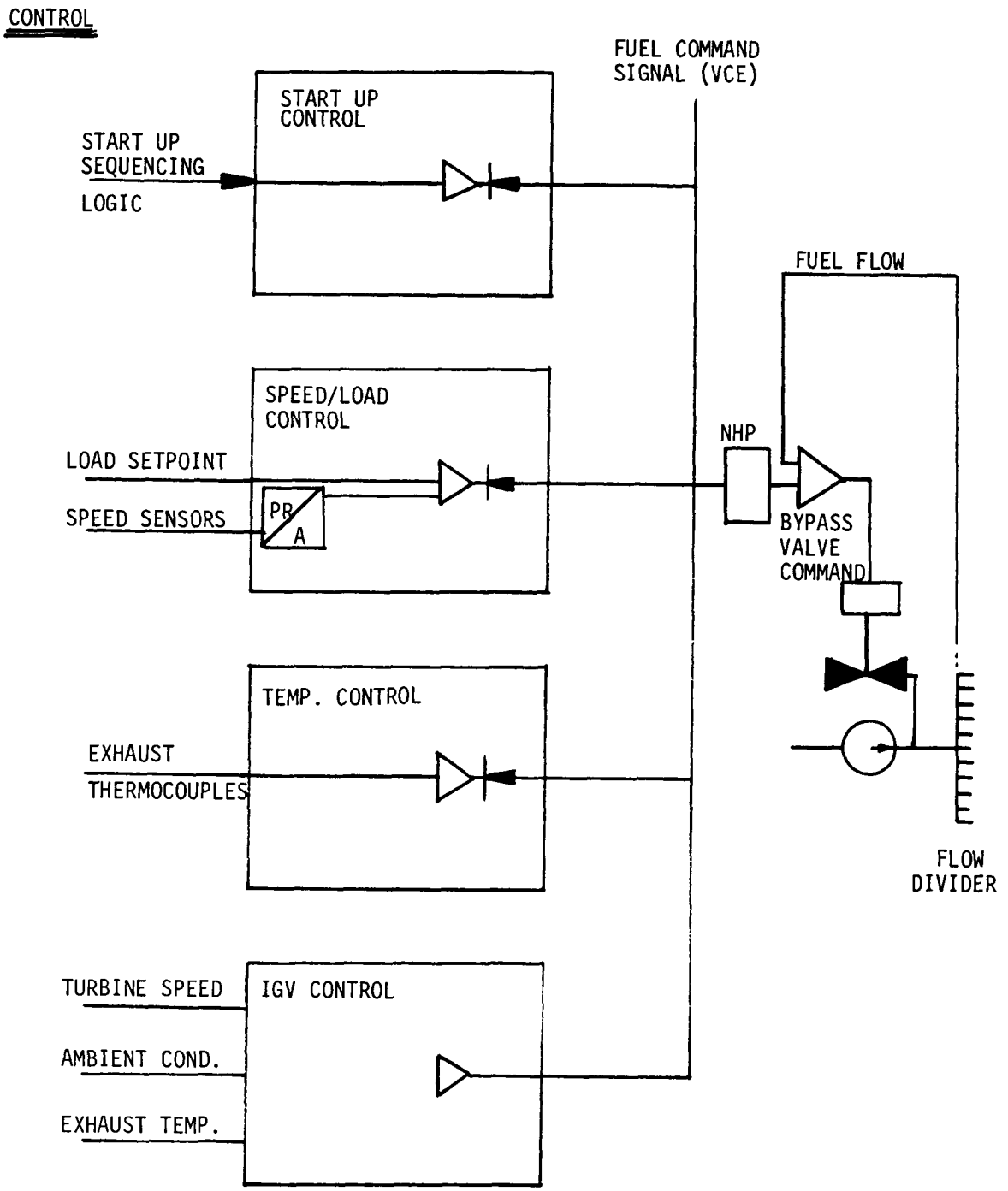

Figure 3.24: Gas Turbine Electrical Controls

PROTECTIVE

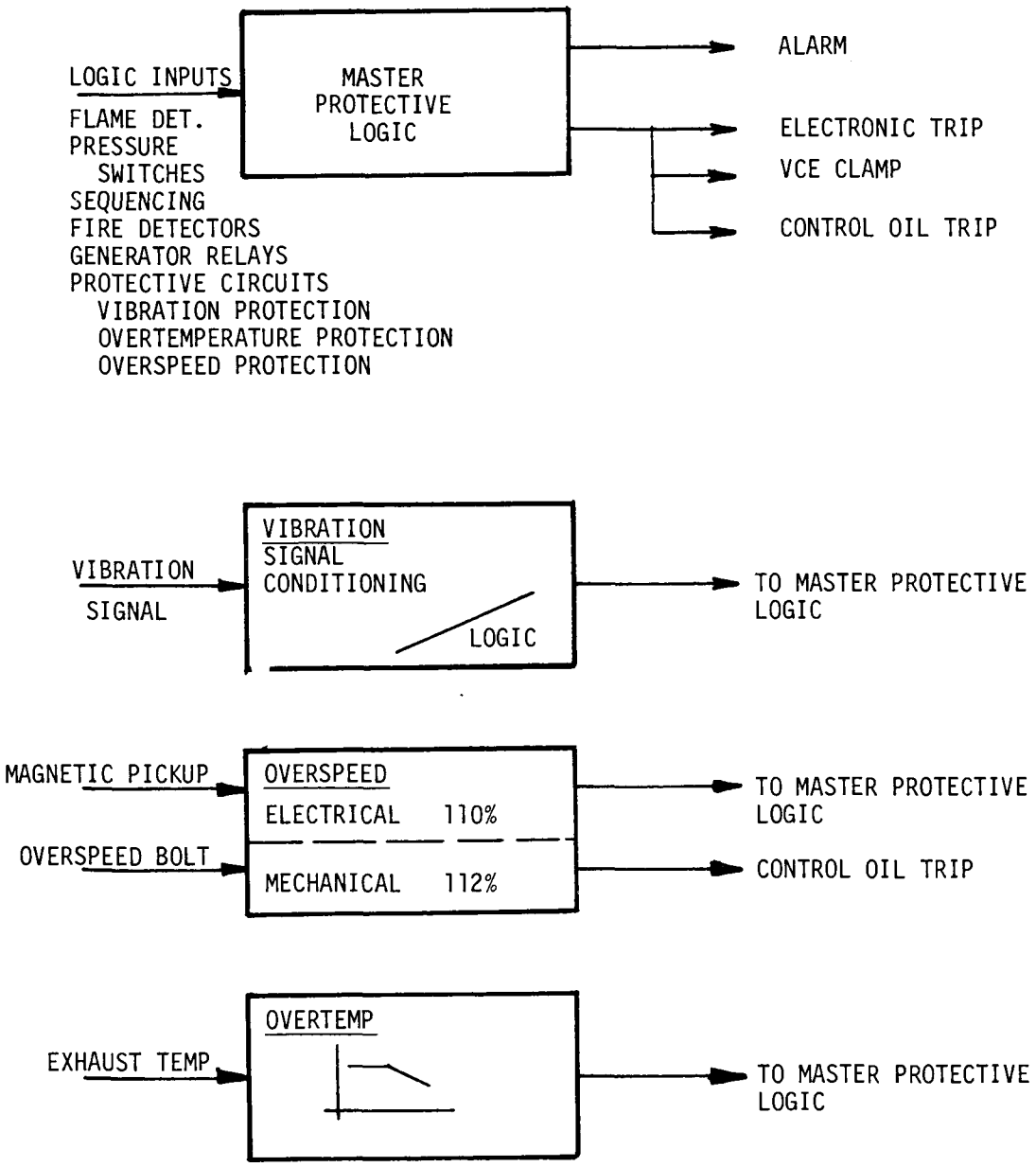

Figure 3.25: Gas Turbine Protective Systems

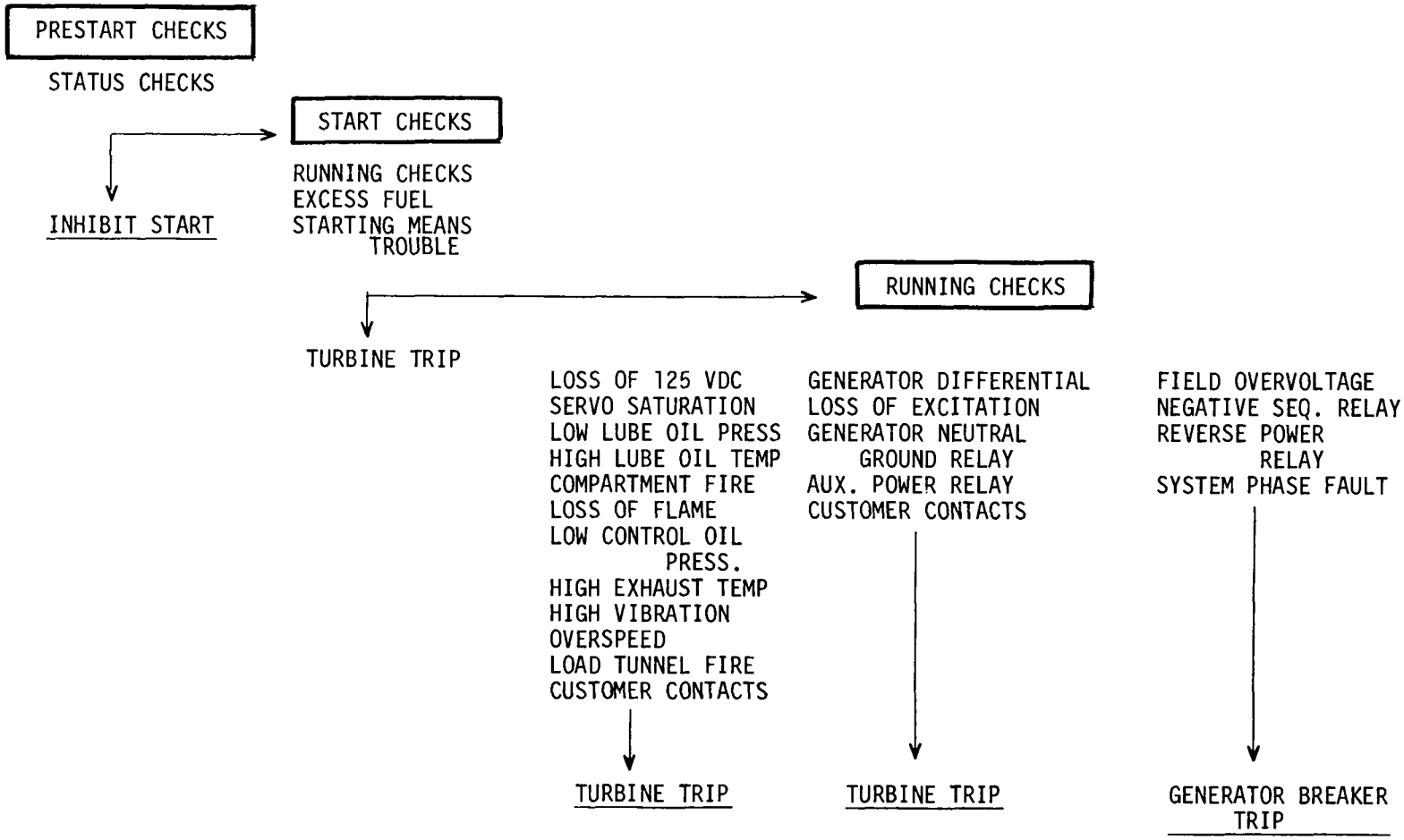

Figure 3.26: Gas Turbine-Generator Protective Logic

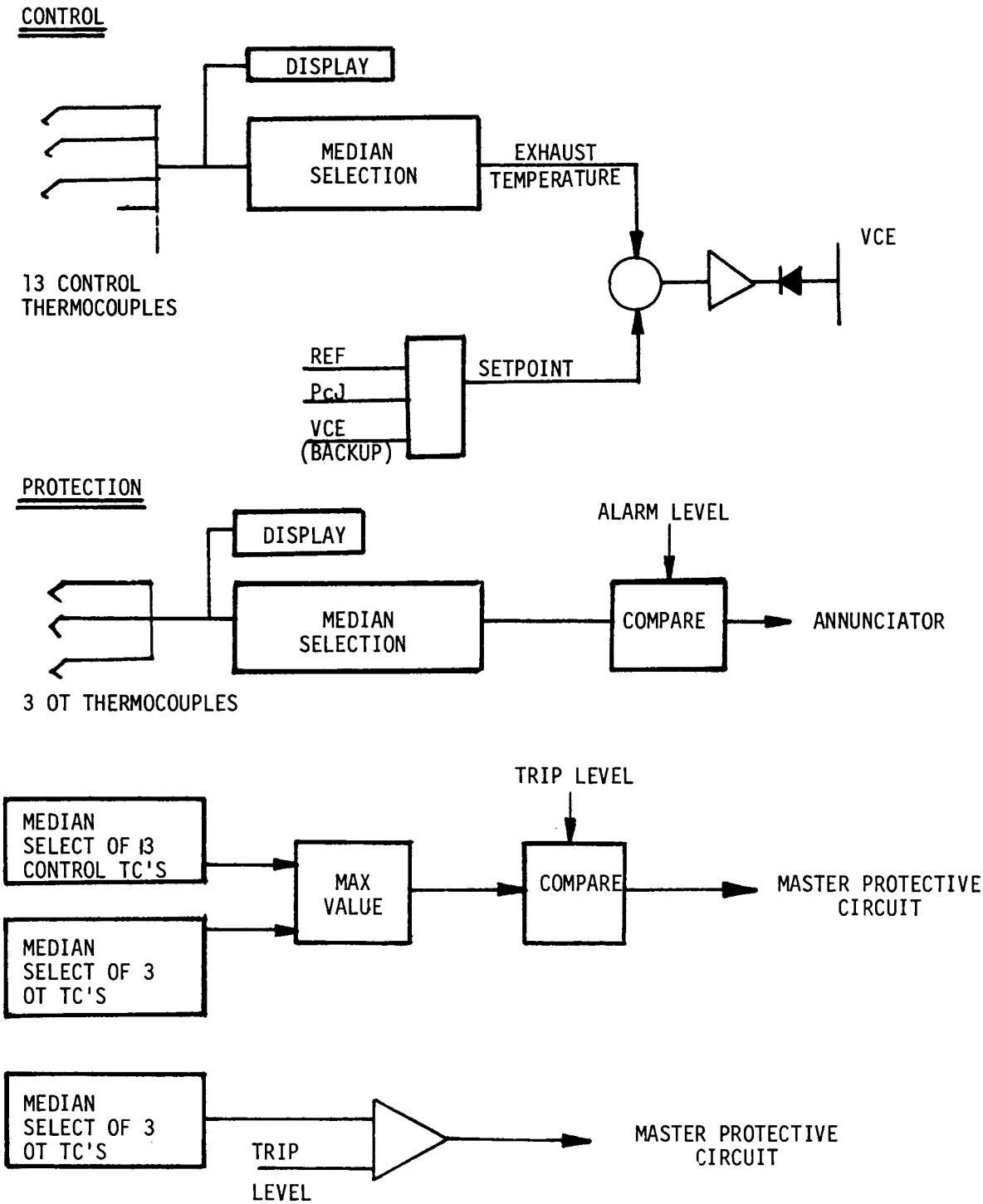

Figure 3.27: Temperature Control and Protection System

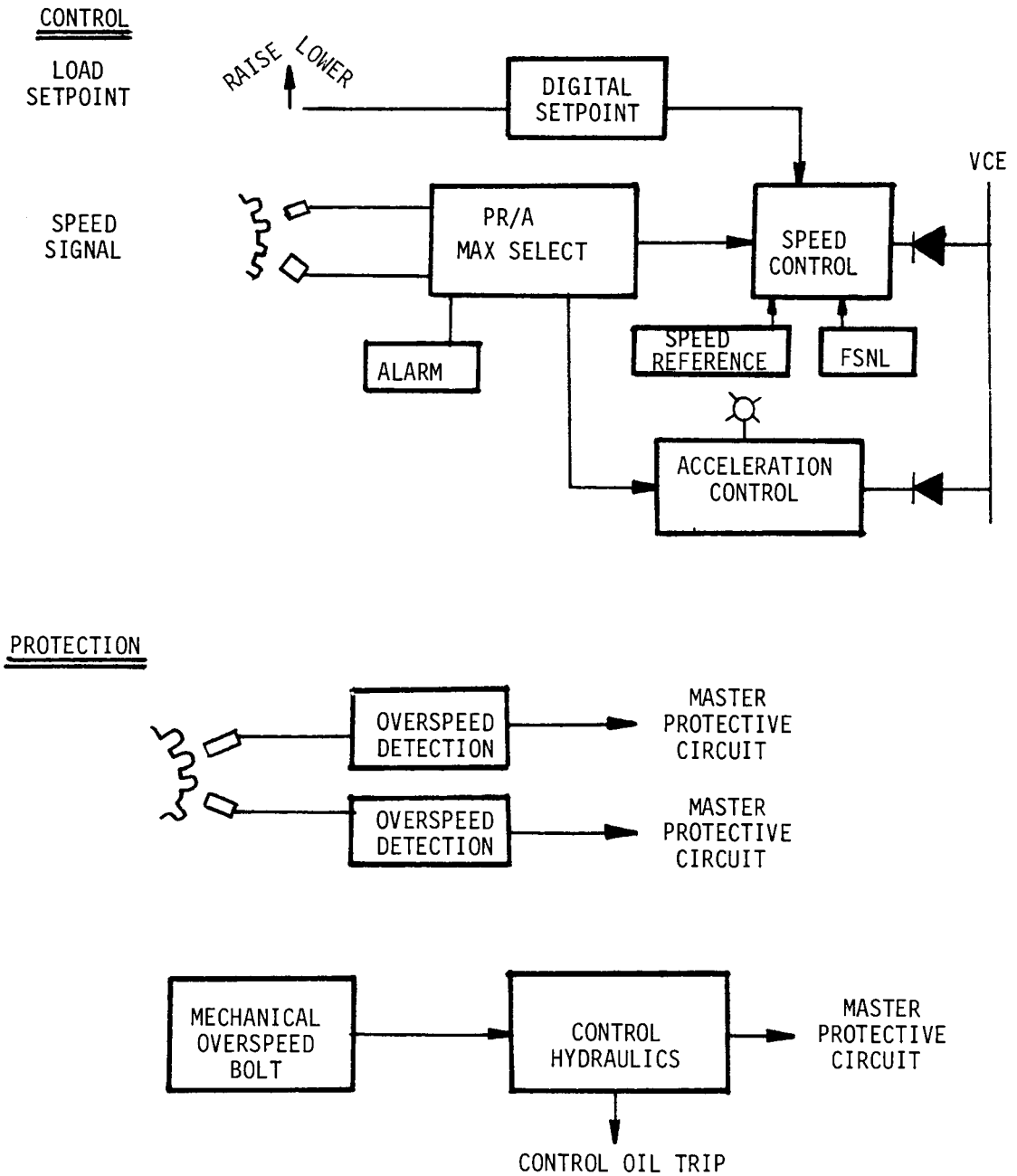

Figure 3.28: Speed/Load Control & Protection

The protection systems only function upon loss of control or the occurrence of turbine hardware deterioration to an unsafe level. Figures 3.25, 3.26 indicate the logic of these systems. The control system is designed with redundancy to keep the loss of control events to a minimum. Many of the control sensors are duplicated. For example speed sensors, fuel flow sensors, and position sensors provide an alarm on the detected failure of one and permit continual operation on the remaining sensor. Some control functions are also duplicated. Exhaust temperature control and speed/load control operate to back up each other. The compressor discharge pressure biasing function is replaced with a VCE biasing function when a compressor discharge pressure transducer failure is detected.

2. On-line Diagnostics

Diagnostics entails the assessment of the operating condition of components, and the system supplies information to a controller or operator. The information can be used for determining a plan for the operation of the equipment. There are, therefore, two separate functions. One is the collection of meaningful data. The other is the evaluation of the data and application of the appropriate action.

The objectives of component and system diagnostics are to aid in maintenance and operation planning, and enhance running reliability. This is done by minimizing both forced and scheduled outages as well as permitting more efficient operation planning. Detection of deterioration of a component or system can be a signal to, within a reasonable time period, schedule a shutdown and inspection, with the appropriate personnel available. This eliminates a potential forced outage and reduces the downtime. Scheduled outages can be based on turbine use, providing an efficient maintenance program which can also make use of concurrent maintenance planning.

A diagnostic system must meet the functional requirements of information processing capability, communication with operator or operations planner, and defined parametric relations. The level of diagnostics dictates the sophistication required for those functions.

The microprocessors have made high level and high volume information processing possible and they are reliable. They also provide a standard format for communication, permitting connection to a wide variety of input/output equipment.

Definition of the parametric relations which provide the appropriate diagnostic information is the most difficult requirement to fill for a comprehensive prognostic/diagnostic system. Key maintenance parameters must be identified. That is, selection of the turbine systems or maintenance items which can most benefit from diagnostic analysis techniques. The parametric relations must be available for operation across the operating range on various fuel types or combinations of fuel types. In other words, their sensitivity to fuel types, temperature, load level cycles and time must be understood. For those parameters which can be measured directly, limits must be established at which action plans should be evaluated. For example, a level of lube oil pressure, or rate of deterioration of lube oil pressure at which system maintenance should be planned is a direct measure of a critical parameter.

Sensor Health

Relationships and limits must be established for those values which are not direct measurements. For example, turbine performance can be used to imply turbine conditions which are not easily measured. Compressor air flow is one of those parameters not easily measured. Once these relations are established, within the constraints of measurable data, limits of operation must be established to provide direction for an action plan.

The relations and limits must be verified and updated with operating experience. The diagnostic system, as it increases in sophistication, attempts to predict maintenance intervals in addition to reporting operating status. As the prognostic function increases, the necessity of verification with operating experience increases. A prognostic/diagnostic system which results in unnecessary maintenance actions will soon be ignored by operators, and one which does not adequately predict maintenance actions does not meet a prime design requirement.

It is possible that development of a comprehensive prognostic/diagnostic system will require development of new sensors or sensing techniques.

Prognostic/diagnostic techniques fall into primarily four categories; direct measurement of calculation to programmed limits; performance monitoring, history recording, and failure diagnostics.

Direct measurement or calculation to programmed limits provides information for evaluating individual system performance. The prognostic and system diagnostic functions are performed in this category. Input data is used to infer remaining operating hours to maintenance at the most sophisticated level, to inferring or noting system deterioration via direct measurement.

Performance monitoring is a technique which provides an assessment of the operating of the turbine. Not directed at a specific component or system, it is an indicator of the overall turbine system.

The operating history is documented with a history recorder. This data can be accessed for trend analysis, used to aid in diagnosing what precipitated fault conditions, and as a turbine log.

A great number of devices used on the gas turbine have design lives which exceed the expected turbine life. Those devices are not, however, immune from random failures. A diagnostics package should be capable of identifying a failed component. This demands a technique of evaluating the output of a sensor relative to a similar sensor or to a predicted value of the sensor output. Sensor output can be interrogated to identify failures which might otherwise not be detected until a forced outage has occurred. This lends itself to perform the diagnostic function both while the turbine is running and also while the turbine is shutdown. This on-line/off-line diagnostic is practical because some turbine control devices and controls are energized even when the gas turbine is not running. The microprocessor can generate a self-testing routine which checks the integrity of its operation.

The Turbine Information and Control System is being developed to perform the prognostic and diagnostic functions. The primary components are the Data Acquisition System (DAS) and the Data Analyzer and Processor (DAP).

The DAS is a microprocessor based system which operates at the unit level. It does a periodic scan of the turbine parameters. The inputs are in the form of serial data, analog data, logic and contact status from the gas turbine generator. A parameter display makes the data available, and a keyboard printer can make a hard copy information transfer. The DAS also provides the interface with the station communication. This consists of status messages and control commands requested or initiated at the station level.

The DAP is a microprocessor based system which functions at the station level. It consists of data storage and processing capability, communication, and input/output peripheral equipment for operator interface. The Data Analyzer and Processor receives turbine generator data from the Data Acquisition System and communicates with station personnel as a tool for performance evaluation maintenance planning. The data storage records the operating history of up to eight turbine generators reporting to a single DAP.

The control of a gas turbine which has small time constants when compared to an operator's reaction time, requires a protective system which will operate quickly and reliably to prevent operating the turbine outside the design limits. To insure reliable protective systems a "failure to trip" or "protection redundancy" is often applied. "Failure to trip" might be applied when a sensor indicates a condition which requires a trip, and the sensor output in the failure state is equivalent, and a difference cannot be detected. "Protection redundancy" refers to a redundancy applied for the purpose of insuring a protective action. A Boolean representation of protective redundancy might be the union of the events, expressed as A 'or B. That is either sensor A indicating a trip state 'or' sensor B indicating a trip state will result in a turbine trip.

Other redundancy configurations will result in other operational biases. For example, A 'and' B, the intersection of the events A and B, biases the trip decision toward running reliability; sacrificing the tripping reliability. To provide redundancy that is unbiased more than two means of evaluating the trip condition are required. The implication is that trip signals vote to assess the validity of a trip signal. The configuration can be considered unbiased because the failure of one sensor cannot insure or preclude a specific control action. In the base of a three sensor configuration, a failed sensor will result in a system biased depending on the sense of the failure. Either one additional trip signal will trip the turbine or both remaining signals must indicate trip to shut down the turbine.

While the unbiased configuration is fault tolerant, it also requires maintenance when a fault is detected to maintain the integrity of the unbiased system and restore the fault tolerant capability. The ultimate objective of the protective system is to reliably identify and shut down the turbine when an unsafe condition is approached. To enhance the running reliability, redundant configurations can be employed with the additional logic to perform the "voting" function. These redundant configurations can improve running reliability only by reducing or eliminating shutdowns due to sensor or interconnection failure. Where possible, the redundancy function can be performed by inferring the parameter value from other data, instead of providing simple duplication of sensors.

Redundancy, while a method of increasing running reliability, also adds complexity. Where sensor performance is deemed to provide unacceptable reliability, design modifications should be considered. If a sensor is failing because of the environment in which it is located, additional sensors in the same location will have equivalent failure rates. A sensor with a failure rate of 0.25 events/year has a probability of failure within a year of 0.2215. Adding a second sensor with an equivalent failure rate and requiring both to indicate a trip condition to precipitate a turbine trip reduces the probability of a false trip due to both sensors failing within that year to 0.0489. If by improving the sensor design or environment, the single sensor failure rate can be

reduced by a factor of five, and the single sensor probability of failure (0.0488) is equivalent to the unimproved but redundant application.

The application of redundancy in control hardware can improve the turbine reliability only as long as the redundancy is maintained. If the simple redundancy is lost due to a sensor failure, then the system reverts back to a single sensor system. Table 3.4 depicts the significance of repairing for the failed sensor. It compares the use of two devices with equivalent failure rates. Significant improvements in failure rates are gained.

An instrumentation and controls improvement program has been underway to investigate and make recommendations in the area of instrumentation and controls reliability improvements. The program is part of a continuing effort to improve reliability performance. It is being supported by Engineering, Program Support, and Maintenance Support. The thrust of the program is directed toward both modifications to existing turbines and application to new production.

To accomplish the "repair while running" function, if success is not to be jepordized the following four elements <u>must</u> be present.

a) There must be a smooth transition to operating with a failed sensor. If the device provides a logic signal, then there is no change in system performance. When a system must tolerate failure of an active control device, the system and performance will change.

b) The failed component must be identified. The level of identification must be at the component replacement level; for example, a specific pressure switch or a specific control component assembly. More specific definition is unnecessary, for the intent is to replace the failed component.

c) The mechanics of replacement of the failed component must insure continued safe turbine operation.

Table 3.4

Repair While Running
Statistical Significance

Configuration	Failure Rate	Probability of Failure in 10000 Hrs. Of Continuous Operation
Single Device - Its Failure will Initiate an Outage	$\lambda = \frac{25 \text{ Events}}{10^6 \text{ Hours}}$	1 in 4.5
Two Devices - Both Devices Must Fail to Initiate an Outage (A' and 'B)	$\lambda = \frac{25 \text{ Events}}{10^6 \text{ Hours}}$ For Each Device	1 in 20
Two Devices - Both Devices Must Fail to Initiate an Outage, A failed Device is Replaced within seven days of the Failure (Repair while Running)	$\lambda = \frac{25 \text{ Events}}{10^6 \text{ Hours}}$ For Each Device	1 in 240

d) Once replaced, returning the system to its original configuratior must be accomplished with a smooth transfer.

The program has addressed 28 gas turbine-generator instrumentation ano control devices which were reviewed. Documentation of the recommendations will be available through the Installation and Service Engineering organization. The recommendations address, among other subjects; vibration detectors, flame detectors, generator circuit breaker, SPEEDTRONIC control, and wiring. When the previously recommended use of extended thermocouples is included, five major contributors to unreliability noted in Task 1.0 and 2.0 have been reviewed.

3.4 HRGT Combined-Cycle Plant Design

1. Introduction

The combined-cycle plant conceptual design and arrangement has been developed consistent with the philosophy of reducing forced outage events and reducing downtime associated with all outage events. This philosophy is achieved by providing redundancy at critical single point failure modes wherever possible, and by arranging the equipment for easy access when maintenance is necessary. These features are described in more detail in the following sections.

2. Major Equipment Arrangement

The major equipment in the combined cycle power plant comprises four gas turbine generators, four heat recovery steam generators a single steam turbine generator and a condensate and feedwater system. The equipment arrangement is shown in Figure 3.29. The overall plant arrangments for distillate and residuel fueled plants are shown in Figures 3.30, 3.31.

In the multi-shaft STAG plant arrangement, each gas turbine drives its own generator and supplies exhaust heat to a heat recovery steam generator. The steam output from the HRSG's is combined in a main steam header and piped to the steam turbine control valves. The steam turbine drives its own separate generator.

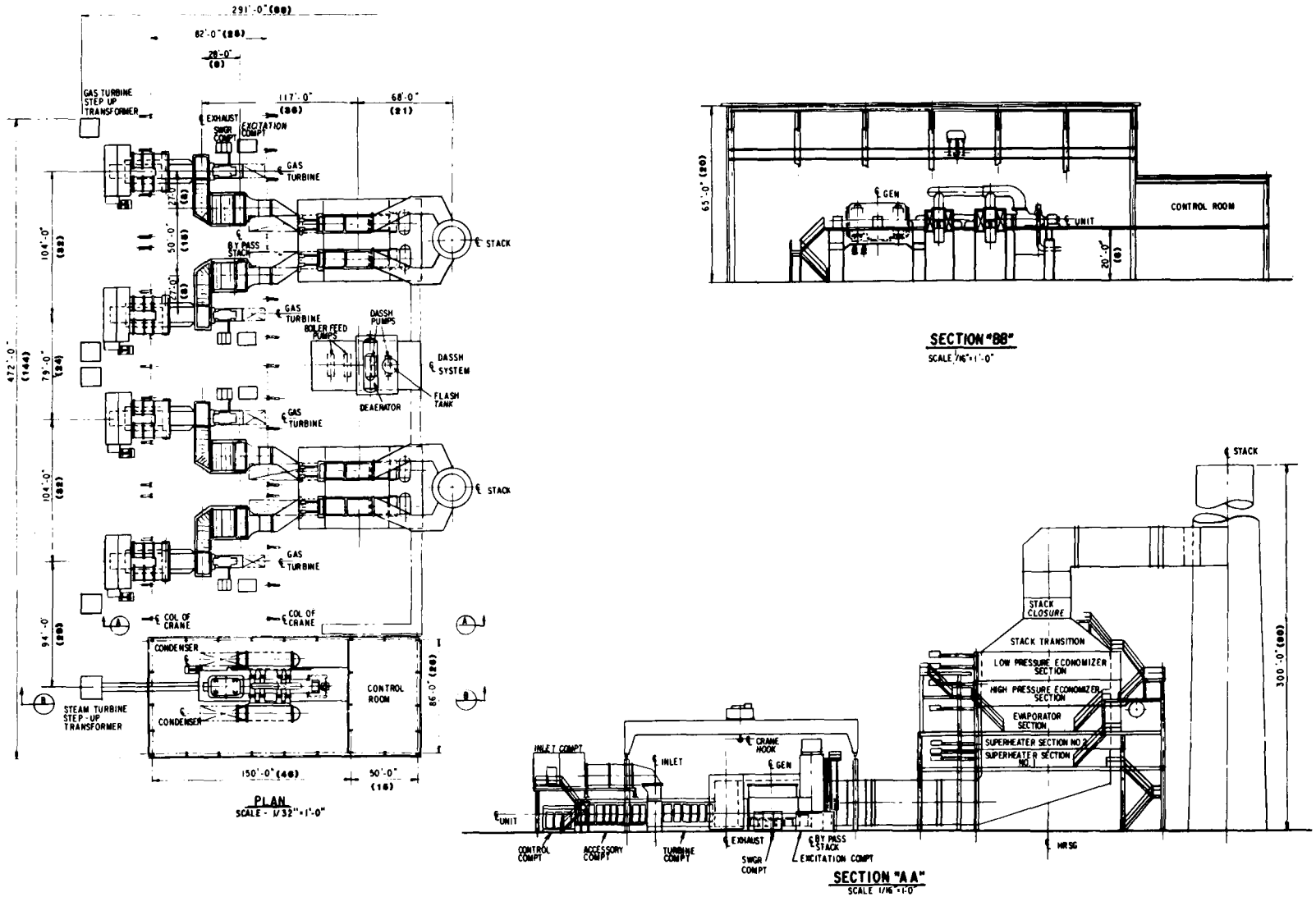

Figure 3.29: Typical Arrangement for Distillate Fuel with Common Stacks

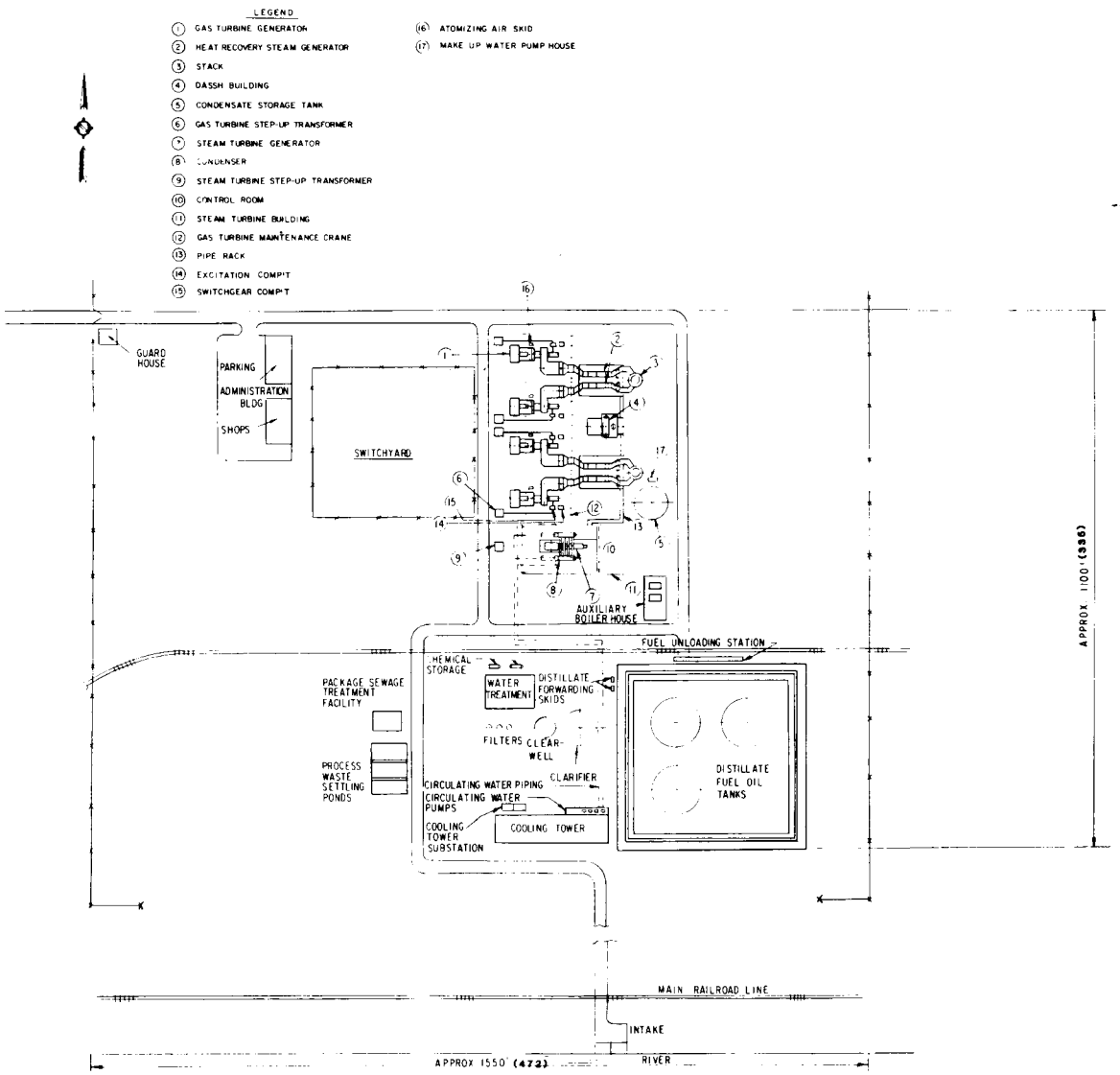

Figure 3.30: Base Case - No. 2 Petroleum Distillate Plant

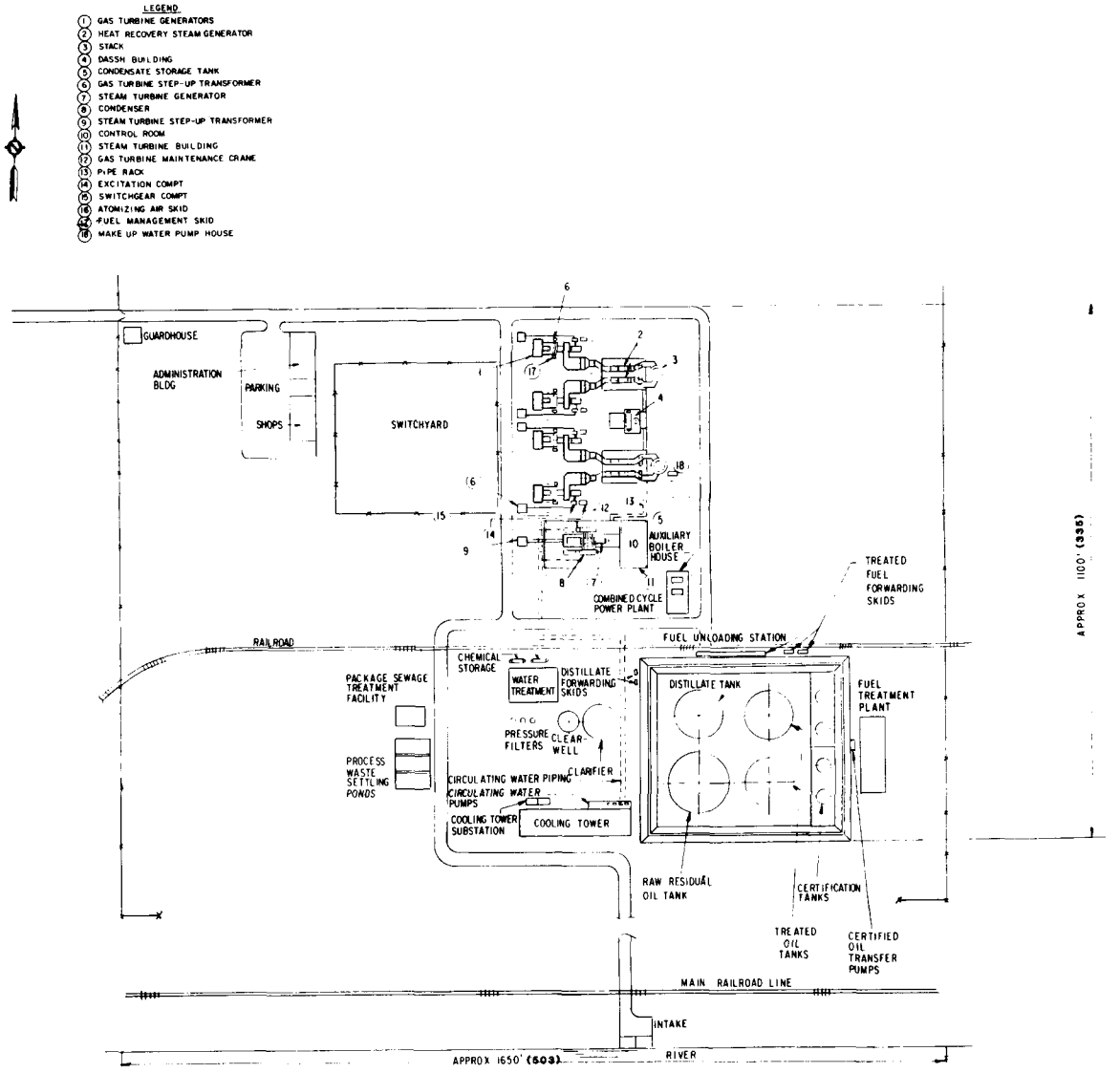

Figure 3.31: Base Case - No. 6 Petroleum Residual Plant

A bypass stack and damper is provided in the exhaust duct between the gas turbine and the HRSG. The purpose of this bypass is to permit rapid start-up of the gas turbine without having to follow any thermal stress restraints imposed by the HRSG and steam turbine. It also provides independent operation of the gas turbine in the event of an unscheduled outage of the HRSG. Scheduled HRSG outages for inspection and routine maintenance are normally scheduled to coincide with the gas turbine outages.

The centerline of the HRSG's has been offset relative to the centerline of the gas turbine exhaust silencer. This offset is to provide space for the addition of a second HRSG at a future date in the event the plant is converted to a gaseous coal derived fuel that could substantially increase the exhaust volume flow.

The gas turbines are arranged in a single line which facilitates the installation of an overhead crane which can service all units. The gas turbine generators and HRSG's are not enclosed in a building since this simplifies the necessary ventilating and cooling of the units and also eliminates the need for building services such as heating, cooling and lighting. The units are provided with weatherproof enclosures for the necessary protection and noise attenuation requirements. The enclosures can be completely removed permitting easy access to the units for maintenance.

Each gas turbine generator and steam turbine generator is provided with separate circuit breakers, switchgear and transformers for independent connection and operation with the electrical grid. The steam cycle condensate and feedwater system is comprised of the following equipment: steam condenser, condensate pumps, deaerator, LP economizer or Deaerator Steam Supply Heater (DASSH) located in the HRSG, DASSH circulating pumps, DASSH flash tank, HRSG feed pumps and feedwater controls.

This equipment provides the necessary feedwater heating and oxygen removal. Dual pumps, each with 100 percent capacity and automatic transfer controls are used for the condensate, DASSH and HRSG feed

pumps to provide complete redundancy in the event of a failure in these components.

The deaerator, flash tank, DASSH pumps and HRSG feed pumps are all located in a central DASSH building structure which provides proper elevation for positive pump suction head and facilitiates the interconnecting pipe arrangements.

The steam turbine generator, the condenser and assocated mechanical and electrical auxiliaries are housed in a separate building. The central control room, battery room and electrical equipment room are also located in the steam turbine building.

3.4.1 Steam Side Equipment

1. Heat Recovery Steam Generator and Auxiliaries

The heat recovery steam generator consists of seven basic components. Figure 3.32 outlines the component configuration and Table 3.5 lists the corresponding weights.

The basic components include:

a) Steam Drum
b) Superheater
c) Evaporator
d) Economizer
e) Forced circulation water pump
f) Pipes, valves, and fittings
g) A hot water heater which will hereinafter be referred to as the DASSH or Deaerator Steam Supply Heater. The heated water is supplied to a flash tank which will convert the hot water into low pressure steam for deaeration and feedwater heating.

The steam generator is of the forced circulation type. It is the function of the circulating water pump to maintain a positive water flow through the evaporator section of the steam generator at all operating conditions.

Table 3.5

Component Weights
Combined Cycle Machine

COMPONENT	LB.	Kg
HRSG		
STACK CLOSURE	16000	7258
STACK TRANSITION	20000	9072
ECONOMIZER SECTION	150000	68039
EVAP. & SUPERHEATER SECTION	370000	167829
ELBOW MODULE	60000	27216
DIFFUSER	24000	10886
STEAM DRUM	50000	22680
ISOLATION DAMPER	15000	6804
STEAM TURBINE/GENERATOR	970000	439985
	1675000	759767

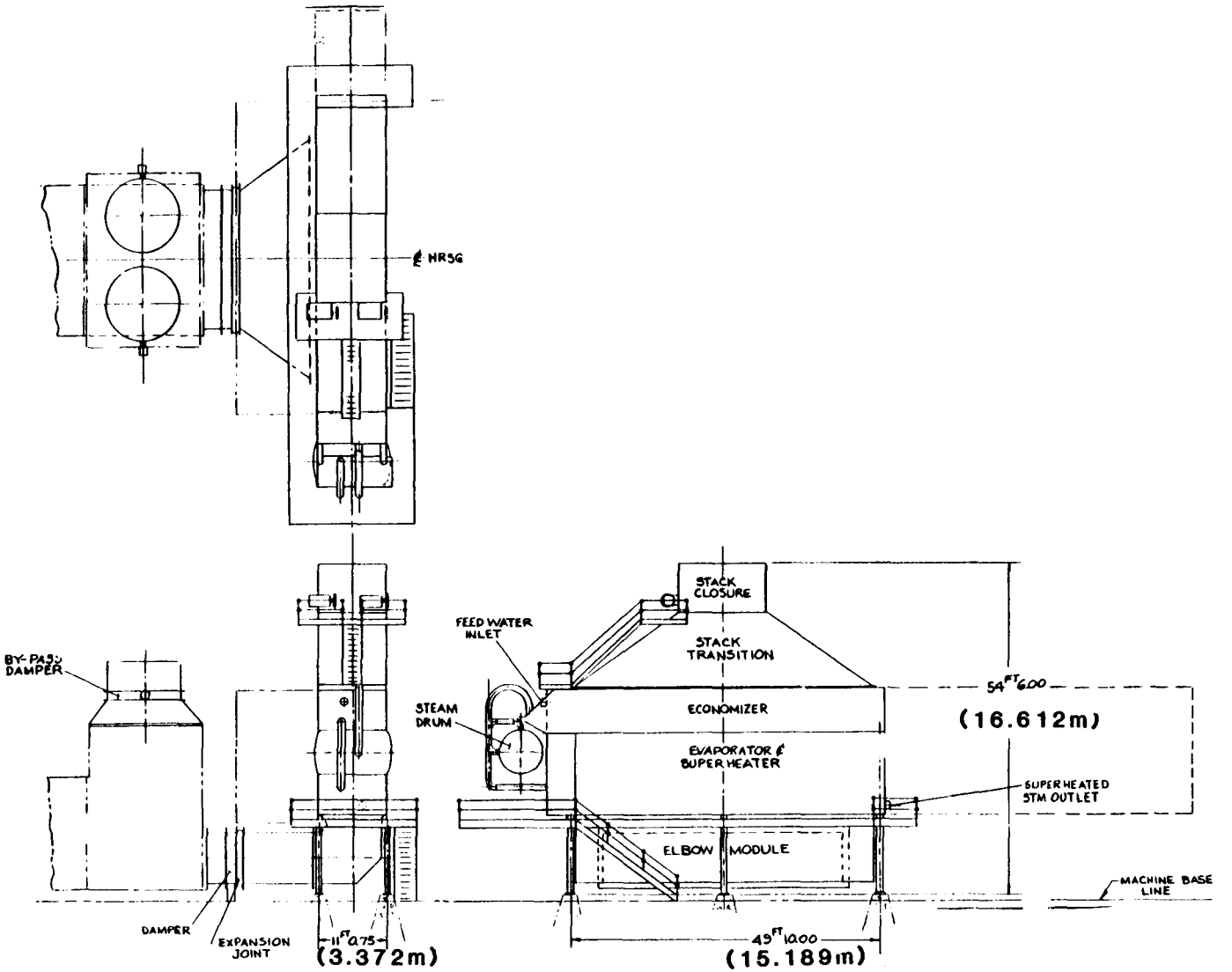

Figure 3.32: HRSG Configuration Outline

The heat transfer sections are arranged in the following order and in the direction of gas flow: superheater, evaporator, economizer, and the DASSH heater.

The superheater section is positioned to absorb the heat from the highest temperature gases. The superheater, (composed of rows of tubes in multiple passes connecting the inlet and outlet header) is specifically designed to meet the performance requirements of steam flow and superheat temperature. Steam flow through the superheater is counterflow to the exhaust gas flow for maximum heat transfer.

A multiple row two-pass evaporator provides for unrestrained tube expansion during temperature swings through the use of free-floating return bends (U-bend type construction) at one end of the evaporator. The U-bend design also provides balanced steam output from the parallel circuits in the evaporator, by connecting the bottom row of tubes to the top row (high and low steam producers), connecting the next top row, etc. resulting in an evaporator with virtually the same steam production from each tube unit. Physically the U-bend tubes are welded to two groups of larger vertical headers which in turn are welded to still larger horizontal inlet and outlet manifold headers. The inlet header is connected to the steam drum. This arrangment provides maximum resistance to thermal shock and offers quick start capability.

The economizer tube circuits are arranged to provide counterflow heat transfer between the water and the exhaust gas flow. Free expansion of the tubing is permitted by the use of a serpentine type arrangement with the headers fixed in position. Economizer heat transfer surfaces are selected to prevent excessive economizer steaming which may lead to vapor locking of some of the economizer tube curcuits. The connecting pipe between the steam drum and the economizer is referred to as a "Hartford Loop". It is the function of this loop to prevent any water from draining out of the economizer during operation, start-up and shut-down.

Access doors are provided to allow entry into each tube bundle assembly for visual inspection as well as entry to the header and return bend

cavities. Openings are also provided in each tube sheet to allow inspection of tubes and sootblowers in that area.

Arms are cantilevered out from the economizer/DASSH heater body. The steam drum is hung from these support arms by hanger bolts. This arrangment will give sufficient flexibility to the drum so that thermal expansion of interconnecting pipe will not place undue stress on either the steam drum or the steam generator.

All insulation will be applied to the inside of the steam generator box; there will be no external insulation. The thickness of insulation will vary to maintain a uniform external box temperature as required for personnel protection as well as prevent sulphur corrosion.

All heat transfer surfaces are of the extended fin type. The fins are helically wound and electric resistance welded to the tube wall. This provides an excellent heat transfer bond between the fins and the tubes. The assembly of the tubes to return bends and headers is of welded construction which minimizes the problem of leakage due to thermal shock caused by rapid temperature swings.

The steam generator and DASSH heater box consists of two longitudinal site plates welded to end plates to form a rigid body structure. The box is split horizontally between the economizer/DASSH heater and the evaporator/superheater section for shipment.

The tube support sheets are drilled to provide and maintain proper spacing and support of the tubes in the various heat absorbing tube bank sections. At various points the tubes are attached to the tube support plates which are free expanding. At the boiler drum end the headers and tubes are restrained in a fixed position. The expansion of support plates and tubes is thus in the direction away from the drum.

All tubes extend beyond the end plates and are joined to their respective headers which are located outside the gas path. A baffle is placed around each individual group of headers and tubes to prevent gas bypassing the heat transfer surfaces.

Four support points are provided near the bottom corners of the evaporator/superheater box section. The entire steam generator as well as certain gas path elements will in turn be supported from the evaporator/superheater box. The drum end of the boxes is supported by very stiff columns serving to fix that end of the box where headers and tubes are fixed. On the back end, the boxes are supported by more flexible columns which allows the box frames to expand at that end.

2. Steam Turbine Generator and Auxiliaries

a) Turbine Description

The steam produced by the HRSG units passes through the steam turbine (Figure 3.33) to generate additional electric power in the combined cycle arrangement. The normal operating mode is with the steam turbine operating on inlet and admission pressure control to accept all steam produced by the HRSG units. A variable inlet pressure control optimizes the thermal efficiency of the turbine and minimizes erosion problems which could occur if the inlet steam temperature drops below the desired level. The range of operation on inlet pressure control is approximately a 40 percent to 100 percent rating. The admission steam control, which is enabled after startup and initial loading, maintains the flash tank pressure at a fixed level. During start-up the high pressure (main steam) and low pressure (DASSH steam) bypass valves discharge steam directly to the condenser in order to establish initial flows and pressure levels. These bypass valves are also used during shut down allowing the turbine to be tripped while operating at a relatively high temperature.

The turbine is a tandem compound, condensing, side exhaust unit which incorporates special design features that enable the unit to accommodate cyclic duty without compromising base load capabilities. Some of these features are:

- Relatively small shaft diameters near the 1st-stage, minimizing thermal stress in the rotor during start-up, loading and shutdown.

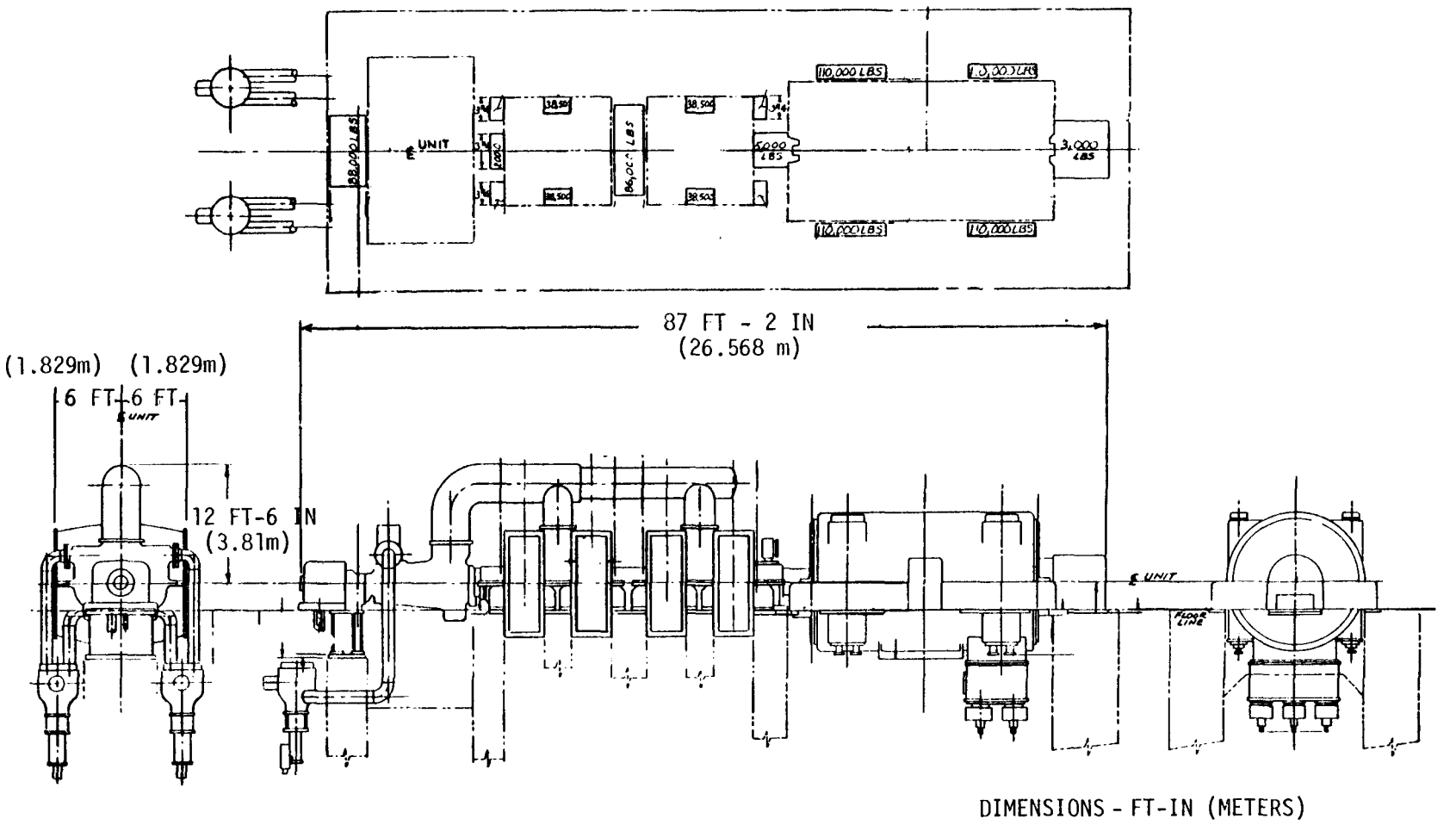

Figure 3.33: Steam Turbine Generator Configuration

- Large fillets between wheels and rotor to reduce stress concentration.

- Axial clearance that are larger than normal to accommodate rotor excursions during daily start-ups and shutdowns. Flexure type supports which eliminate sticking and twisting of the No. 1 journal-bearing and thrust-bearing support structure.

- Relatively short 23 inch (584 mm) last stage buckets limit erosion which is generally proportional to the square of the last stage bucket tip velocity. This is an especially important consideration in this non-reheat application.

- Moisture removal provisions in the steam path further reduce concerns for undue erosion in the latter stages and promote high availability, reliability and low maintenance cost.

- Provisions for borescope inspection of the steam path, together with other normal maintenance and monitoring procedures, allows opening the steam turbine for overhaul on an "as needed" rather than periodic basis, thus improving availability and lowering maintenance cost.

General Electric turbines are configured in a rugged impulse-type design. The buckets utilize external dovetail forms for wheel attachments and the protection of wheel rims. To attain maximum thermal efficiency, steam paths are constructed in conical form to provide an uninterrupted flow path. Three-dimensional flow analysis is utilized in the design of the low-pressure sections.

Each bucket stage design is completely stress analyzed for conformity to specific factors of safety. Most importantly, each bucket is dynamically analyzed and tuned, to avoid incidence of major frequency resonances during operation. For each bucket stage, vibratory stresses are calculated and reviewed in relation to accepted stress limits.

Buckets are fastened to wheels that are integral with the shaft. Rotors are the most critical part of a turbine and are made from alloy steel forgings. They are produced to rigid GE specifications and represent the highest-quality processing available within the steel industry. Forging quality is verified by meticulous inspections utilizing modern ultrasonic techniques to ensure proper cleanliness of material. Other nondestructive testing processes, such as magnetic-particle testing, are also employed after final machining. All rotors are heat treated to relieve forging stresses and to demonstrate thermal stability. High-temperature rotors are heat tested in the factory following finish machining, to verify stability.

Diaphragm outer and inner rings are constructed from alloy steel, and the aerodynamically shaped nozzles and side walls that form the steam-path passages are made of 12 Cr steel. In moisture areas, diaphragm outer rings are constructed with specially formed contours to promote separation and entrapment of moisture from the steam flow for extraction and drainage. These design features are necessary to minimize water-erosion damage to the stationary and rotating elements and to improve efficiency.

Horizontal joint flanges are designed to optimum proportions to support the shell and to accommodate required bolting sizes. All horizontal joint faces are precision ground to ensure uniform contact between halves and reduce steam leaks. The entire shell is centerline supported from the flanges (which also support internal hardware) to minimize distortion and alignment-change effects.

b) Generator Description

The generator is a direct connected three phase, hydrogen-cooled synchronous machine. The field is energized by a static excitation system.

The generator rotor, or field, is a large electromagnet that rotates at 3600 RPM. The rotor is a solid Ni Moly V forging of extremely high quality, high strength, and high permeability.

The copper rotor windings are made of a silver-bearing copper alloy, having all joints individually brazed. Each of the winding turns are insulated with epoxy-impregnated glass insulation.

The stator frame surrounding the rotor is fabricated of heavy plate that is thoroughly checked by magnetic-particle tests for cracks prior to factory shipment. At each corner of the stator, a hydrogen cooler is employed for the hydrogen cooling system. Construction features of these coolers allow them to be cleaned one at a time without loss of hydrogen and while the generator is carrying 80 percent load.

The design also allows all water piping to be below the generator and all gaskets and seals to be outside the gas path of the generator.

Every generator core, regardless of the manufacturer, experiences movement during operation, which is transmitted to the support members. To prevent this movement and vibration from being transmitted to the frame and foundation, the generator is mounted on springs. These springs are large strong steel bars fastened to plates at each end of the generator frame and to plates supporting each end of the rotor. This type of mounting has proven to be extremely effective in preventing vibration from being transmitted to the frame and foundation. It also effectively reduces noise and results in exceptionally quiet performance.

The excitation equipment consists of a set of rectifiers that receives AC power from the generator terminals. The alternating-current power to the rectifier is derived from three single-phase power-potential transformers and three saturable current transformers that include DC-control windings to permit voltage regulation by changing the saturation of the transformer core. These

components are designed to utilize generator terminal voltage and current, and they provide the required excitation to maintain generator terminal voltage and current constant for all steady-state generator loading. Basically, the power potential-transformers provide no-load excitation for the generator whereas the saturable-current transformers provide excitation for load changes on the generator. An extremely attractive feature of this system is the ability to produce ceiling excitation for a severe fault condition such as a three-phase fault at the generator terminals.

The deaerator, flash tank, DASSH pumps and HRSG feed pumps are all located in a central DASSH building structure which provides proper elevation for positive pump suction head and facilitates the interconnecting pipe arrangements.

The steam turbine generator, the condenser and associated mechanical and electrical auxiliaries are housed in a separate building. The central control room, battery room and electrical equipment room are located in the steam turbine building.

3.4.2 Plant Auxiliary Equipment

1. Fuel Storage, Treatment and Forwarding

Distillate only

The fuel oil system consists of a distillate oil tank car unloading station, three distillate oil storage tanks, and two distillate oil forwarding skids. Each oil forwarding skid provides fuel to two gas turbines and is equipped with two 100 percent capacity fuel forwarding pumps.

Dual Fuel Distillate/Residual

For the distillate oil system (necessary for gas turbine start up and shutdown), the equipment is the same as the distillate except that the three storage tanks are reduced to one. The residual fuel oil system

comprises a single raw residual oil storage tank, two treated oil tanks, four treated oil certification tanks, residual oil washing ano inhibition system and two treated residual oil forwarding skids. The operation of the residual oil washing and inhibition equipment is covered elsewhere in this report.

2. Main Circulating Water System

The primary circulating water system for steam turbine condenser cooling is a closed loop system with a wet, mechanical draft cooling tower, circulating water pumps and the necessary interconnecting pipes and valves.

The cooling tower is made up of six individual cells. Each cell comproses air intake louvres, mechanical draft motor driven fan, water distribution system and chemically treated wood fill for water droplet dispersion. Normally five cells provide sufficient cooling for full load operation, the sixth cell providing back up redundancy.

The cooling water is pumped to the condenser with three pumps that each have 33-1/3 percent of the total capacity necessary. A fourth pump of equal size is provided for back up redundancy in the event of a single pump failure.

3. Auxiliary Cooling System

The auxiliary cooling system provides cooling water for the steam turbine generator lube oil coolers, hydrogen coolers and several steam cycle pump coolers. This cooling water is provided by two pumps each with 100 percent of the required capacity.

4. Water Treatment Systems

The plant water treatment systems are designed to process river water to various levels of purity and/or chemistry as required by different plant consumers. The four basic types of water treatment systems, as shown in Figure 3.34 are the Raw Water Treatment, Demineralizer, Chemical Conditioning and Potable Water Systems.

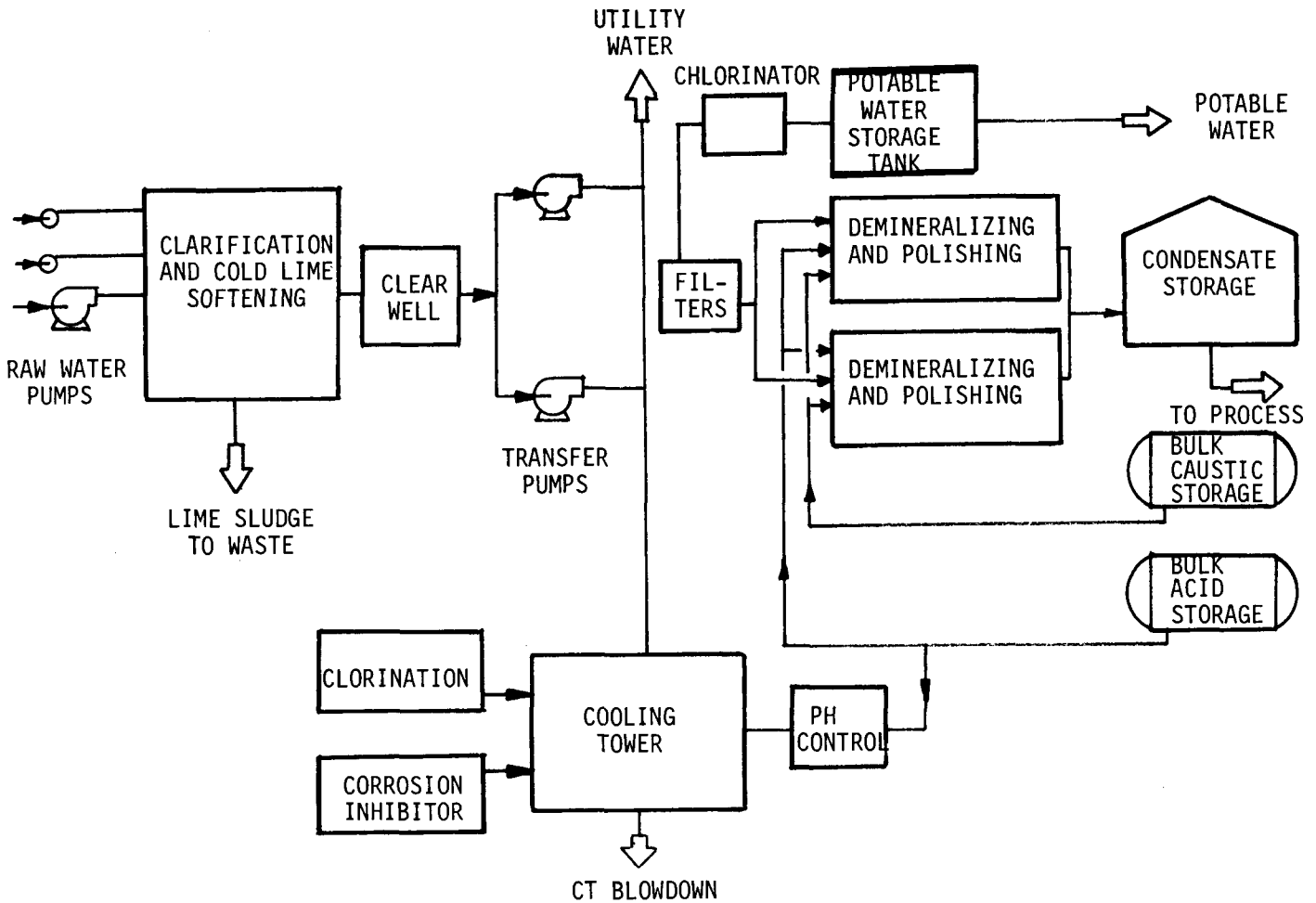

Figure 3.34: Water Treatment System Flow Diagram

a) Raw Water Treatment Sybsystems

The Raw Water Treatment Subsystem assures adequate quality for cooling tower make-up, utility water and demineralizer pre-treatment. Water is pumped to a cold lime softener where the hardness and turbidity is reduced. Outflow from the softener is collected in the clearwell to allow settling time and assure efficient distribution to other systems.

b) Demineralized Water System

This system provides makeup water to the steam system as well as filtered water to the potable water system. Filtered water from the clearwell is demineralized in a two train system; each train having a cation and anion unit followed by a mixed bed ion exchange unit. Each train can supply total plant needs on an intermittent basis when the other train is being regenerated.

c) Main Feedwater Chemical Injection System

The chemical injection system for the main feedwater system is arranged to feed hydrazine to the deaerator storage tank for oxygen removal, a neutralizing amine to the boiler feed discharge and DASSH pump discharge, and phosphate and/or caustic to the steam drum of each HRSG. Amine is used as a neutralizer to assist in pH control. The phosphate controls the hardness of the boiler water by precipitating the solids and keeping them suspended, thus preventing accumulation of scale on the heating surfaces, while caustic controls boiler water pH.

d) Potable Water System

The potable water system provides chlorinated, pressurized water for plant drinking water and other uses.

5. Auxiliary Steam System

The auxiliary steam system supplies steam for the following purposes:

- Plant Heating
- Equipment Winterizing
- Turbine Steam Seal System
- Deaerator Pegging Steam

Two 100 percent capacity package boilers are provided to satisfy the above steam requirements. THe boilers are fired with distillate oil and are equipped with economizers for increased efficiency. Boiler instrumentation and controls permit automatic operation with minimum supervision.

6. Fire Protection System

The fire protection system is a closed water loop system. It supplies the fire water systems in individual buildings and other plant areas. The fire protection system is designed in accordance with the National Fire Protection Association Code.

7. Instrument and Service Air System

The compressor air system provides dry and clean air for instrumentation and control purposes, and for general plant services.

Instrument air is supplied by two 100 percent capacity nonlubricated type reciprocating compressors. Cooled air from the compressors is processed through a common prefilter, a desiccant type air dryer, and an after filter. Instrument air is provided oil-free and dry (with an atomspheric dew point of -40°F (-40°C)) and with no particles greater than 10 microns.

A 100 percent capacity non-lubricated type reciprocating compressor is installed to supply the plant with oil-free air for maintenance and general services. This compressor also serves as a backup for the instrument air compressors.

3.5 New Centerline Plant Reliability

In this section, the affects of incorporating plant design improvements, changes, additions and modifications to the flange-to-flange, accessories, controls and steam system are presented in terms of the reliability parameters, as predicted by the model of the combined-cycle base loaded petroleum fueled plant.

The plant design features are outlined in Table 3.6. This table lists, in four configurational groups, all the design features incorporated in the plant model by line item category. The discussions and descriptions of these features are given above in Sections 3.1 through 3.4. The prefixes for the items in the table denote PQI as a Product Quality Improvement, STD as Standard Product Offering, DD as a feature envisioned to require Design and Development before seeing production service and OPT as an Optional feature.

Predictions of the gains in reliability performance, derived from the model of the baseloaded plant as a function of the four configurations, are listed in Table 3.7. The plant defined for each configuration is a STAG 400 which consists of four gas turbines, four HRSG's and one steam turbine. The corresponding EPRI program reliability targets are listed for comparison.

The reliability performance from the ORAP data base is included as shown by the raw ORAP column. ORAP data are the prime data base for the program collected during January, 1977, through September, 1978. The data represents the input from 27 utilities owning 100 MS7001 gas turbines operating in mainly peaking duty with some mid-range service. The EPRI exclusion criteria which define the inherent plant reliability have not been applied to the data. Therefore, the data are not representative of the inherent plant. Also, this ORAP data consists of primarily older MS7001B machines shipped from 1972 through 1976, which accounts for the reliatively low availability performance. Additionally, the MS7000 machine fleet was undergoing significant product quality improvements during the same time period. Accordingly, the raw ORAP availabilities are shown for reference only.

Table 3.6

Configuration Description

Case 2	Case 3 - Case 29	Case 30 & 31	Case 32 - Case 35
CONFIGURATION 1 PRESENT MARKET OFFERING (PMO)	CONFIGURATION 2 (BASED ON THE PMO WITH FOLLOWING ADDITIONS)	CONFIG. 3 (BASED ON CONF.2 WITH FOLLOWING ADDITIONS)	CONFIG. 4 (BASED ON CONF.3 WITH FOLLOWING ADDITIONS)
(1-3) Compressor PQI-17th Stage Stub Shaft Swirl Extraction Slots PQI-Rotor Bolt Hole Clearance and Shot Peening	(1-3) Compressor DD -Redesign of Vertical Flanges to allow greater access ability to blading DD -New Strong Basic Discharge Casing Design DD -Improved Clearance Control between rotating and stationary hardware		
(4-6) Combustor PQI-Brazed Ring Liner PQI-Fuel Control for LCF Improvements PQI-Improved Materials, Coatings and Designs PQI-Heavy Wall Positive curvature transition piece PQI-Improved Atomizing air & fuel system PQI-Improved Fuel Nozzle Filters & Wear Matl's	(4-6) Combustor DD-Wrapper Redesign to improve maintenance DD- Machined Ring Liner DD-Canted Combustor DD-Multi Nozzle/Fuel		
(7-17) Turbine PQI-1st Stage Nozzle Design Improvements PQI-2nd Stage Nozzle Design Improvements PQI-Bore Fan Removed	(7-17) Turbine DD-Shell Length Reduced DD-Cooling flow improvements DD-Improved Cooling in 2nd & 3rd Stage Stationary Shrouds		

PQI = PRODUCT QUALITY IMPROVEMENT
DD = DESIGN AND/OR DEVELOPMENT
STD = STANDARD OFFERING
OPT = OPTIONAL OFFERING

Table 3.6 Cont'd.

CONFIGURATION 1 PRESENT MARKET OFFERING (PMO)	CONFIGURATION 2 (BASED ON THE PMO WITH FOLLOWING ADDITIONS)	CONFIG. 3 (BASED ON CONF. 2 WITH FOLLOWING ADDITIONS)	CONFIG. 4 (BASED ON CONF.3 WITH FOLLOWING ADDITIONS)
PQI-Startup/Shutdown Cycle changed to reduce thermal strains PQI-Stage 1 bucket improved corrosion life			

Table 3.6 Cont'd.

CONFIGURATION 1 PRESENT MARKET OFFERING (PMO)	CONFIGURATION 2 (BASED ON THE PMO WITH FOLLOWING ADDITIONS)	CONFIG. 3 (BASED ON CONF. 2 WITH FOLLOWING ADDITIONS)	CONFIG. 4 (BASED ON CONF. 3 WITH FOLLOWING ADDITIONS)
PQI-Stage 2 Bucket has improved process specifications to relieve residual strains PQI-New Nozzle Design prevents downstream spacer rubs			
(18) <u>Bearings</u> PQI-Improvement in Turbine Aft Support leg cooling and alignment PQI-Reduction in fire portential by using fire resistant lub-ricant, Hi temp mineral oils, improved bearing cap seals and proper maintenance and clean-up. PQI-Improved Liner Cooling (Up drain liner) and buffer air control	(18) <u>Bearings</u> DD-Redesigns to improve disassembly reduce heat load, better oil flow and increased seal life DD-Run Bearing drains partially full to allow removal of precipitators on the #2 bearing vent		

Table 3.6 Cont'd.

CONFIGURATION 1 PRESENT MARKET OFFERING (PMO)	CONFIGURATION 2 (BASED ON THE PMO WITH FOLLOWING ADDITIONS)	CONFIG. 3 (BASED ON CONF.2 WITH FOLLOWING ADDITIONS)	CONFIG. 4 (BASED ON CONF.3 WITH FOLLOWING ADDITIONS)
	<u>Inlet Casing</u> DD-Through Bolting to facilitate removal and replacement DD-8 vs. 7 struts DD-Bearing Cap can be removed with inlet casing undisturbed <u>Exhaust Frame Diffuser</u> DD-General Cooling Improvements DD-Changes to reduce exit pressure, exhaust noise, assembly problems and reduce the number 3 bearing heat load, increase accessability to vibration sensors and thermocouples <u>Turbine Cleaning</u> STD-Washing Hot Parts by supplying wash water through atomizing air inlets STD-Automatic nutshell feeding through the liner dilution holes		

Table 3.6 Cont'd.

CONFIGURATION 1 PRESENT MARKET OFFERING (PMO)	CONFIGURATION 2 (BASED ON THE PMO WITH FOLLOWING ADDITIONS)	CONFIG. 3 (BASED ON CONF. 2 WITH FOLLOWING ADDITIONS)	CONFIG. 4 (BASED ON CONF. 3 WITH FOLLOWING ADDITIONS)
	Compressor and Combustor Inspection DD-Inspection Ports positioned to minimize inspection down time and to permit inspection while operating where possible.		
ACCESSORIES			
22) Generator PQI -Redesigned field conductors, armature PQI -More hold down bolts on bearing caps PQI -Improved air filtration PQI -Hydrogen cooled generator	22) Generator DD -Improved hydrogen cooled generator	20) Exhaust Duct DD -Strengthened	20) Exhaust Duct DD -Corten 409S DD -Increased thickness
26) Fuel Pump PQI -New design screw type with independently lubricated bearings		29) OTHER FUEL DD -Redundant components on fuel forwarding skid	29) OTHER FUEL DD -Reduced equipment and redundant instrumentation
27) Flow Divider Note: Configuration #2 improvements are now standard offering, but were not considered as such in our model runs.	27) Flow Divider PQI-Stainless steel bearings and components PQI-Increased side clearance around flow gears		

Table 3.6 Cont'd.

CONFIGURATION 1 PRESENT MARKET OFFERING (PMO)	CONFIGURATION 2 (BASED ON THE PMO WITH FOLLOWING ADDITIONS)	CONFIG. 3 (BASED ON CONF. 2 WITH FOLLOWING ADDITIONS)	CONFIG. 4 (BASED ON CONF. 3 WITH FOLLOWING ADDITIONS)
28) Fuel Filter OPT-Dual filters	28) Fuel Filters STD -Dual fuel filters		
32) Heat Exchangers OPT-Duel lube oil heat exchangers	32) Heat Exchangers STD -Dual lube oil heat exchangers		
33) Filters OPT-Lube/hydraulic dual filters	33) Filters STD -Dual lube and hydraulic filters		
34) Other Lube/Hyd. PQI-Elimination of the synthetic lube oil downtime/outage PQI-Full size A.C. Aux. lube oil pump PQI-Separate D.C. emergency pump			34) Other Lube/ Hydraulic DD -Redundant trip pressure switch 35) Cooling Water System DD -Redundant devices
36) Fire Protection PQI-Improved conduit design PQI-Improved wiring material	36) Fire Protection DD -CO2 discharge controlled with Speedtronic timing system STD -Customer clarification of maintenance instructions		

Table 3.6 Cont'd.

CONFIGURATION 1 PRESENT MARKET OFFERING (PMO)	CONFIGURATION 2 (BASED ON THE PMO WITH FOLLOWING ADDITIONS)	CONFIG. 3 (BASED ON CONF.2 WITH FOLLOWING ADDITIONS)	CONFIG. 4 (BASED ON CONF.3 WITH FOLLOWING ADDITIONS)
37) Atomizing Air Compressor	37) Atomizing Air Compressor DD -New centrifugal compressor DD - Media filters		
38) Other Atomizing Air PQI-Atomizing air skids removed	38) Other Atomizing Air DD -Pulsation dampers removed		38) Other Atomizing Air DD -Reduced single point failures and redundant instrumentation
39) Other Support PQI-Bleed valves improved PQI-Limit switches improved			
	41) Other Start DD -Improved clutch sequence control DD -New full unit breakaway starting system (hydrodynamic coupling turning gear and control logic)		
42) Accessory Gear & Other PQI-Improved thrust bearing PQI-Improved fuel pump clutch			

Table 3.6 Cont'd.

CONFIGURATION 1 PRESENT MARKET OFFERING (PMO)	CONFIGURATION 2 (BASED ON THE PMO WITH FOLLOWING ADDITIONS)	CONFIG. 3 (BASED ON CONF. 2 WITH FOLLOWING ADDITIONS)	CONFIG. 4 (BASED ON CONF.3 WITH FOLLOWING ADDITIONS)
43) Piping PQI-Redesigned atomizing air piping PQI-Stop collars on tube connectors PQI-Additional supports for small piping			44) Other Arrangement DD -Redundant instrumentation
45) Enclosures and Lagging PQI-Increased cooling air flow PQI-Negative pressure ventilation system PQI-Compartment vent fan control changes PQI-CO2 operated vent dampers			
CONTROLS			
47) Electrical Controls and Protection PQI-Integrated temperature system (ITS)		47) Electrical Controls and Protection DD -Voting logic with microprocessor based control	

Table 3.6 Cont'd.

CONFIGURATION 1 PRESENT MARKET OFFERING (PMO)	CONFIGURATION 2 (BASED ON THE PMO WITH FOLLOWING ADDITIONS)	CONFIG. 3 (BASED ON CONF. 2 WITH FOLLOWING ADDITIONS)	CONFIG. 4 (BASED ON CONF. 3 WITH FOLLOWING ADDITIONS)
47) Continued PQI-Mark II controller PQI-Speedtronic added reliability (STAR) PQI-Changes in non-critical solinoids PQI-Solid state synchronizor and additional relay to prevent manual breaker closure out of phase PQI-Mark II increased solid state logic (fewer relays) 48) Power Systems PQI-Low voltage breaker a.) changes in wiring b.) reduced duty cycle on charging motor c.) clarification of maintenance practices PQI-Starting motor transformer uprated 49) Control Devices PQI-Honeywell Flame Detector - on line maintenance PQI-Thermocouples extended leads ITS PQI-Combustion monitor now a mature device		49) Control Devices DD -Voting logic with micro-processor based control	

Table 3.6 Cont'd.

CONFIGURATION 1 PRESENT MARKET OFFERING (PMO)	CONFIGURATION 2 (BASED ON THE PMO WITH FOLLOWING ADDITIONS)	CONFIG. 3 (BASED ON CONF. 2 WITH FOLLOWING ADDITIONS)	CONFIG. 4 (BASED ON CONF. 3 WITH FOLLOWING ADDITIONS)
47) Continued PQI-Overspeed bolt improved trigger PQI-Vibration sensor a.) Upgraded b.) Removed trip function from atomizing air system PQI-Switches a.) Increased life due to base-load duty PQI-Conduit & Wiring a.) Mineral insulation in load compartment b.) Generally upgraded insulation c.) Improved assembly techniques PQI-Limit switches a.) CO2 doors in exhaust compartment trip removed 50) Systems PQI-Atomizing air controls reduction in number of control devices and simplification of system PQI-Water injection system controls added PQI-Motor control center mounted on accessory base			

PQI = PRODUCT QUALITY IMPROVEMENT
DD = DESIGN AND/OR DEVELOPMENT
STD = STANDARD OFFERING
OPT = OPTIONAL OFFERING

Table 3.7

Comparison of Program Targets with Plant Configuration

PARAMETER	EPRI TARGETS	RAW ORAP FLEET	CONF. 1	CONF. 2		CONF. 3		CONF. 4		CONF. 3 & REDUNDANT GT(8/9)[5]	
			PMO-CASE 2	CASE 5	CASE 6	CASE 30	CASE 31	CASE 32	CASE 33	CASE 34	CASE 35
AVAILABILITY %											
SC PLANT (1 GT)	95	80.4	93.7	94.2	91.9	94.5	92.3	94.8	92.5	99.1	98.6
CC PLANT (4 GT & 1 ST)	90	76.6[9] (78.7)[1]	86.2 (91.4)[1]	86.7 (92.3)[1]	84.4 (90.1)[1]	87.1 (93.1)[1]	84.8 (90.9)[1]	87.3 (93.3)[1]	85.0 (91.2)[1]	92.3	91.6
MAINTENANCE COST/MILLS/kWh											
GAS TURBINE	1	NA[7]	.77	.74	1.36	.73	1.34	.72	1.33	.76	1.39
PLANT	2	NA[7]	1.10	1.05	1.68	1.04	1.66	1.03	1.65	1.08	1.73
OPERATING HOURS BETWEEN SHUTDOWN (MTBF)	9000	145	450	470	440	530	500	550	520	1900[4]	1900[4]
HOURS BETWEEN SCHEDULED HGP AND MAJOR INSP.	18000	NA[8]	25000	28000	14000	28000	14000	28000	14000	28000	14000
STARTING RELIABILITY %	99	90.9	>91	>91	>91	>91	>91	>91	>91	>91	>91
FUELS FLEXIBILITY	LIGHT/HEAVY OIL	DIST.[6]	DIST.	DIST.	RESID.	DIST.	RESID.	DIST.	RESID.	DISTILLATE	RESIDUAL
FIRING TEMPERATURE °F (°C)	≤2300 (1260)	N/A	1985 (1085)	1985 (1085)	1985 (1085)	1985 (1085)	1985 (1085)	1985 (1085)	1985 (1085)	1985 (1085)	1985 (1085)
H.R. COMB. CYCLE (BTU/kWh)	7500	N/A	8100	7910[2]	8060[2]	7910[2]	8060[2]	7910[2]	8060[2]	7910[2]	8060[2]
H.R. SIMPLE CYCLE (BTU/kWh)	9500	N/A	11400	11740[2]	11900[2]	11740[2]	11900[2]	11740[2]	11900[2]	11740[2]	11900[2]
OVERSPEED REQUIREMENTS %	120	110	110	110	110	110	110	110	110	110	110
LOAD FOLLOWING RESPONSE %	±25	±8.3[3]	±8.3[3]	±8.3[3]	±8.3[3]	±8.3[3]	±8.3[3]	±8.3[3]	±8.3[3]	±8.3[3]	±8.3[3]

1 EQUIVALENT AVAILABILITY (DEFINED IN GLOSSARY)

2 MARGINED VALUES (GROSS HHV)

3 TYPICAL LOADING RATE OPTIMIZED FOR HARDWARE LIFE

4 MTBF IS LIMITED BY OTHER STEAM CYCLE HARDWARE

5 8/9 REPRESENTS ONE REDUNDANT GAS TURBINE AND HRSG IN CONJUNCTION WITH TWO STAG 400 PLANTS--OR EIGHT UNITS AVAILABLE OUT OF NINE

6 RESIDUAL FUEL OPERATION NOT MONITORED BY ORAP

7 NOT AVAILABLE FROM ORAP

8 NOT AVAILABLE FROM ORAP

9 ONLY STAG DATA

10 TABLE S.3 DEFINES THE HARDWARE CHANGES IN EACH CONFIGURATION

Configuration 1, in Table 3.6 lists the prime differences between the PMO or a MS7001E configured for baseload duty and the equipment and its configuration which defined and determined the raw ORAP data base used as the starting point in this program (i.e., peaking/mid-range hardware). The PMO is designated as Case 2 in the plant model. The remaining configurations reflect features to enhance maintenance, incorporate component redundancy, reduce single point failures and control features as indicated in Table 3.6. For evaluation purposes it is necessary to compare all parts of Table 3.6 listing the constituency of the configurations and Table 3.7 depicting the model predictions of reliability performance associated with these configurations.

The reliability parameters associated with Configuration 1, do not achieve EPRI's reliability and performance targets. The plant availability is approximately four percentage points under the target and the MTBF is considerably lower.

Configuration 2 incorporates predominately Design and Development (DD) type improvements. Within the flange-to-flange area component related redesigns were identified that increase the turbine maintainability and reliability for Configuration 2, these are:

Compressor

- Through bolting of casting flanges to enhance maintenance.
- 8 vs 7 struts increased stiffness of inlet.
- #1 bearing housing can be removed without inlet casing being removed for enhanced maintenance of journal and thrust bearings.
- Relocation of vertical compressor casing flanges to enhance accessibility to compressor blading.

Combustion

- Shortened machine ring and welded liner in canted configuration to increase parts life
- Multi-head fuel nozzle enhance quiet combustion.
- Separate removal of each combustor for ease of maintenance.

Turbine

- Combustion wrapper redesign allows easy removal of 1st stage buckets and nozzles without removal of turbine casing.
- 1st-stage bucket new retaining ring for enhanced ease of disassembly.
- Cooling improvements in turbine shell and shrouds for reduceo weight and size.

Exhaust Frame and Diffuser

- Cooling design improvements enable cooling adjustments to be easily made and are more tolerant of site condition and application (i.e., less major teardowns).
- product improvements to reduce exit pressure, reduce exhaust noise, reduce assembly problems and reduce the No. 3 bearing heat load, increase accessibility to the vibration sensors and thermocouples.

Bearings

- Product improvements to enhance disassembly, reduce heat load, provide better oil flow, distribute and increase seal life.
- Bearing drains will run partially full eliminating precipitators on the #2 vent.

Aft Support Leg

- Minimize gas turbine/generator misalignment by design and cooling modifications.

Turbine Cleaning

- Washing turbine hot parts by supplying wash water through the atomizing air inlets.
- Automatic on-line nutshell feeding through the compressor and combustor.

Inspection

- Inspection ports will be positioned to insure the minimum amount of downtime per inspection and to permit inspection while operating where possible.

The accessory changes proposed are an improved hydrogen-cooled generator, a flow divider with increased clearances and stainless steel bearings, dual fuel and oil filters, dual heat exchangers, fire protection improvements, new centrifugal atomizing air compressors and filters and improvements in the starting system. These features were incorporated in our model and are designated as Case 5 for distillate fuel and Case 6 for residual fuels. As can be seen in Table 3.7, the gains made in the combined-cycle equivalent plant availability meet or exceed the EPRI targets. The simple-cycle plant and MTBF predictions still require some improvement.

Configuration 3 incorporates additional features in the exhaust system, fuel forwarding skid and the inclusion of the microprocessor based control system. This is defined as Configuration 3 in Table 3.6 and Case 30 for distillate fuel and Case 31 for residual fuel. The exhaust system change consisted of strengthening the ducting to increase cycle life. The fuel forwarding skid change consisted of incorporating dual forwarding pumps and other components. However, Configuration 3 still did not quite meet the EPRI Reliability Targets.

The fourth configuration of further reliability improvements incorporated a redesign of systems to reduce the sensitivity to single point failure of small components. This was accomplished in the fuel and atomizing air system areas by eliminating components such as the fuel pump clutch, analyzing the required function of trip devices and circuits and by modifications to prevent failed sensors and devices from causing unnecessary trips while still providing the protection function. In the lube oil system, where trip protective devices can not be eliminated, reliability improvements were made through the use of redundant devices and confirmatory control logic. Redundant pumps were utilized on the cooling water system to upgrade system reliability.

Configuration 4, represented by Case 32 for distillate fuel and Case 33 for residual fuel, incorporated these design changes and reflects a significant level of effort in investigating system designs at a detailed level. Configuration 4 compares favorably with the EPRI targets. Simple-cycle plant availability reaches 95 percent with a target of 95 percent; combined-cycle plant availability reaches 87 percent or 93 percent based upon equivalent availability with a target of 90 percent; maintenance cost estimates are within target values. However, the largest variation still exists with the MTBF. The Case 32 model value for MTBF is estimated to be 550 hours compared to a target value of 9000 hours. It should be noted that even with all of the improvement features incorporated between Configuration 1 and 4, the MTBF was increased only by 16 percent. It is apparent by the plant model that even though a given functional system, such as the fuel system, incorporates improved reliability features as those mentioned, resulting in high availability, low failure rate and high MTBF, it is just one of many independent systems. The situation is that a high reliability performance fuel system and a lube system for example do not help one another in reducing failures. Consequently, more than one failure per year from any system, subsystem or component part results in missing the EPRI target of 9000 hours MTBF. These considerations lead to evaluations of redundance at the gas turbine/HRSG level which is discussed in Section 3.7 below.

However, Configuration 4 meets most of the EPRI targets and is presented as the new centerline machine in this program. It is represented by Cases 32 for distillate fuel and 33 for residual fuel in our model. A breakdown of the reliability parameters for these cases of Configuration 4 are given in Tables 3.8 through 3.12.

For reference and comparison purposes, reliability parameters are listed for Configuration 2 (Cases 5 and 6) in the appropriate tables in Task 2: they are listed for Configuration 3 (Cases 30 and 31) in Table 3.13.

Table 3.8

Reliability Results Task 3.0 Configurations Cases 32 & 33

HARDWARE	EVENT TYPE	λ	HRS. PER YEAR	MTBF	AVAIL.	MAINT. COSTS	
GAS TURBINE COMBINED CYCLE POWER PLANT (1-63)	FO	13.99	641	550	87.3 * / 93.3	1.03	
	SO	12.79	472				
GT COMBINED CYCLE GE SCOPE (1-54 & 57)	FO	11.96	526	640	88.9	.97	
	SO	12.39	447				
GT ENGINEERING F-F (1-18)	FO	1.20	75	6300	97.0	.55	
	SO	2.48	191				
POWER PLANT MECHANICAL (19-46)	FO	2.43	73	3100	99.0	.10	
	SO	6.05	19				
GT CONTROLS (47-51)	FO	1.68	25	4500	99.5	.01	
	SO	2.34	17				
HRSG (52)	FO	3.0	108	2500	98.8	.02	
	SO	0	0				
OTHER STEAM CYCLE (53-56)	FO	3.95	337	1900	93.8	.29	
	SO	1.0	210				
CUSTOMER EQUIP. (55, 56, & 58-63)	FO	2.03	115	3800	98.4	.06	
	SO	.4	25				

* EQUIVALENT AVAILABILITY

CASE 32

Table 3.8 Cont'd.

HARDWARE	EVENT TYPE	λ	HRS. PER YEAR	MTBF	AVAIL.	MAINT. COSTS	
GAS TURBINE COMBINED CYCLE POWER PLANT (1-63)	FO	14.33	651	520	85.0 * / 91.2	1.65	
	SO	148	663				
GT COMBINED CYCLE GE SCOPE (1-54 & 57)	FO	12.31	536	600	86.6	1.59	
	SO	148	638				
GT ENGINEERING F-F (1-18)	FO	1.23	83	6000	94.7	1.05	
	SO	19.98	379				
POWER PLANT MECHANICAL (19-46)	FO	2.75	75	2700	99.0	.22	
	SO	124	13				
GT CONTROLS (47-51)	FO	1.68	25	4300	99.5	.01	
	SO	2.34	17				
HRSG (52)	FO	3.0	108	2500	98.8	.02	
	SO	0	0				
OTHER STEAM CYCLE (53-56)	FO	3.95	337	1900	93.8	.30	
	SO	1.0	210				
CUSTOMER EQUIP. (55, 56, & 58-63)	FO	2.03	115	3700	98.4	.06	
	SO	.4	25				

* EQUIVALENT AVAILABILITY

CASE 33

Table 3.9

Case 32 - Air Cooled-Distillate Fuel
Configuration 4

	HARDWARE	EVENT	T	FAILURE RATE EVENT/YEAR
00	GT COMB CYCLE PWR PL (1-63)	FO	.84	13.9869
		SO		12.7911
0	GT COMB CYCLE GE SCOPE (1-57)	FO	.84	13.7509
		SO		12.3871
I	GT ENGINEERING (F-F) (1-18)	FO	.99	1.2043
		SO		2.4800
A.	COMPRESSOR (1-4)	FO	1.0	0.2110
		SO		0.5050
1.	COMPR BLADES AND VANES	FO	N/A	.1655
		SO		.1125
2.	COMPR ROTOR STRUCTURE	FO	"	.0424
		SO		.38
3.	COMPRESSOR STA STRUCTURE	FO	"	.0031
		SO		.0125
4.	MAJOR INSPECTION	FO	"	N/A
		SO		"
B.	COMBUSTOR (5-8)	FO	1.0	.57
		SO		1.4
5.	COMBUSTION LINER & T/P	FO	N/A	.18
		SO		.88
6.	COMBUSTION CASING	FO	"	0.
		SO		0.
7.	FUEL NOZZLES & OTHER COMB.	FO	"	.39
		SO		.52
8.	COMBUSTION INSPECTION	FO	"	N/A
		SO		N/A
C.	TURBINE (9-17)	FO	.74	.2233
		SO		.5250
9.	TURBINE BUCKETS STAGE 1	FO	N/A	.0583
		SO		.1875
10.	TURBINE BUCKETS STAGE 2	FO	"	.0083
		SO		.0625
11.	TURBINE BUCKETS STAGE 3	FO	"	.0242
		SO		.0063
12.	TURB. NOZZLE & SHROUD STG. 1	FO	"	.0083
		SO		.1125
13.	TB NOZ & SHD STG. 2	FO		0.0025
		SO		0.0037

NOTE: T = TRANSFER FUNCTION

Table 3.9 Cont'd.

	HARDWARE	EVENT	T	FAILURE RATE EVENT/YEAR
14.	TURB NOZZLE & SHROUD STG 3	FO SO	N/A	0.0017 0.0025
15.	TURBINE ROTOR STRUCTURE	FO SO	"	0.100 0.
16.	TURBINE STA. STRUCTURE	FO SO	"	0.0200 0.1500
17.	HOT GAS PATH INSP.	FO SO	"	N/A
18.	BEARINGS (ADDS TO F-F)	FO SO	"	0.2000 0.0500
II	POWER PLANT ENG (PP) (19-56)	FO SO	.81	11.0926 9.3961
A.	POWER PLANT MECH (19-46)	FO SO	.61	2.4309 6.0547
A.	INLET, EXH AND ACOU (19-21)	FO SO	.41	0.3040 0.5710
19.	INLET	FO SO	1.0	0.0870 0.4650
20.	EXHAUST	FO SO	.33	0.2170 0.1060
21.	ACOUSTICS AND OTHERS	FO SO	1.0	0. 0.
B.	LOAD SYSTEM (22-25)	FO SO	.70	0.2075 0.3493
22.	GENERATOR	FO SO	.70	0.2075 0.3493
23.	LOAD COUPLING	FO SO	1.0	0. 0.
24.	LOAD GEAR	FO SO	1.0	0. 0.
25.	OTHER LOAD	FO SO	1.0	0. 0.
C.	FUEL SYSTEM (26-30)	FO SO	.44	0.2614 2.3204
26.	MAIN FUEL PUMP	FO SO	1.0	0.0094 0.0094
27.	FUEL FLOW DIVIDER	FO SO	.79	0.0230 0.0120
28.	FUEL FILTERS	FO SO	1.0	0.0700 1.8800

Table 3.9 Cont'd.

	HARDWARE	EVENT	T	FAILURE RATE EVENT/YEAR
29.	OTHER FUEL	FO	.32	0.1590
		SO		0.419
30.	FUEL CONDITIONS SYSTEM	FO	1.0	0.
		SO		0.
D.	LUBE AND COOLING SYS (31-35)	FO	.59	0.2620
		SO		1.8290
31.	LUBE VAPOR EXTRACTOR	FO	1.0	0.0140
		SO		0.2020
32.	HEAT EXCHANGERS, HEATERS	FO	1.0	0.0290
		SO		0.1160
33.	LUBE/HYD. FILTERS	FO	1.0	0.0200
		SO		1.1100
34.	OTHER LUB/HYD.	FO	.50	0.1120
		SO		0.2710
35.	COOLWATER SYS (INCL NOZ)	FO	.55	0.0870
		SO		0.1300
E.	SUPPORT SYSTEM (36-39)	FO	.59	0.6070
		SO		0.3260
36.	FIRE PROTECTION	FO	.55	0.3340
		SO		0.0780
37.	ATOMIZING AIR COMPRESSOR	FO	.7	0.0910
		SO		0.0810
38.	OTHER ATOMIZING AIR	FO	.43	0.0870
		SO		0.0720
39.	OTHER SUPPORT	FO	1.0	0.0950
		SO		0.0950
F.	START AND ACC SYS (40-42)	FO	.97	0.1270
		SO		0.1150
40.	STARTING DEVICE	FO	1.0	0.0110
		SO		0.0200
41.	TURNING GEAR & OTHER START	FO	.92	0.0460
		SO		0.0250
42.	ACCESS GEAR & OTHERS	FO	1.0	0.0700
		SO		0.0700
G.	PLANT ARR & PACKAG (43+44)	FO	.91	0.4610
		SO		.4540
43.	PIPING	FO	1.0	0.4470
		SO		0.3240
44.	OTHER ARR (INC WAT WASH & NUT)	FO	.24	0.0140
		SO		.1300
H.	ENC LAG HEAT & VENT (45+46)	FO	.83	0.2010
		SO		0.0900

Table 3.9 Cont'd.

HARDWARE	EVENT	T	FAILURE RATE EVENT/YEAR
45. ENCLOSURES & LAGGING	FO	.80	0.1620
	SO		0.0340
46. HEATING & VENTILATION	FO	1.0	0.039
	SO		0.056
B. CONTROLS (GAS TURB) (47-51)	FO	.62	1.6791
	SO		2.3414
47. ELECTRICAL CONTROLS	FO	.65	0.2000
	SO		0.4265
48. ELECTRICAL POWER SYSTEMS	FO	1.0	0.2811
	SO		0.2293
49. CONTROL DEVICES	FO	.55	0.9200
	SO		1.3478
50. SYSTEMS (CONTROLS)	FO	1.0	0.1806
	SO		0.2660
51. MISC CONTROLS	FO	--	0.1000
	SO		0.0718
C. STEAM CYCLE RELATED (52-56)	FO	1.0	6.9500
	SO		1.0000
52. HEAT RECOVER STEAM GENERATOR	FO	1.0	3.0000
	SO		0.
A. STEAM--EXCLUDING HRSG (53-56)	FO	1.0	3.9500
	SO		1.0000
53. STEAM TURBINE	FO	1.0	1.5300
	SO		1.0000
54. ST GENERATOR	FO	1.0	0.6300
	SO		0.
55. CONDENSER & F W SYST (CUST)	FO	1.0	0.6800
	SO		0.
56. BOP STEAM (CUST)	FO	1.0	1.1100
	SO		0.
57. UNIDENTIFIED (GTD)	FO	1.0	1.4540
	SO		0.5110
58. CUSTOMER/NON-GE EQUIP (58-63)	FO	1.0	0.2360
	SO		0.4040
59. POWER TRANSFORMERS	FO	1.0	0.0130
	SO		0.0220
60. HV CIRCUIT BREAKERS	FO	1.0	0.0070
	SO		0.0430
61. HIGH VOLTAGE STRUCTURES	FO	--	0.
	SO		0.0290
62. CUSTOMER SHUTDOWN	FO	--	0.
	SO		0.
63. OTHER CUSTOMER EQUIPMENT	FO	1.0	0.2160
	SO		0.3100

Table 3.10

Case 33 - Air Cooled-Residual Fuel
Configuration 4

	HARDWARE	EVENT	T	FAILURE RATE EVENT/YEAR
00	GT COMB CYCLE PWR PL (1-63)	FO	.86	14.3333
		SO		148.2717
0	GT COMB CYCLE GE SCOPE (1-57)	FO	.86	14.0973
		SO		147.87
I	GT ENGINEERING (F-F) (1-18)	FO	1.01	1.2321
		SO		19.9800
A.	COMPRESSOR (1-4)	FO	1.0	0.2110
		SO		0.5050
1.	COMPR BLADES AND VANES	FO	N/A	.1655
		SO		.1125
2.	COMPR ROTOR STRUCTURE	FO	"	.0424
		SO		.38
3.	COMPRESSOR STA STRUCTURE	FO	"	.0031
		SO		.0125
4.	MAJOR INSPECTION	FO	"	N/A
		SO		"
B.	COMBUSTOR (5-8)	FO	1.0	.57
		SO		1.15
5.	COMBUSTION LINER & T/P	FO	N/A	.18
		SO		.63
6.	COMBUSTION CASING	FO	"	0.
		SO		0.
7.	FUEL NOZZLES & OTHER COMB.	FO	"	.39
		SO		.52
8.	COMBUSTION INSPECTION	FO	"	N/A
		SO		N/A
C.	TURBINE (9-17)	FO	1.06	.2511
		SO		18.275
9.	TURBINE BUCKETS STAGE 1	FO	N/A	.0389
		SO		.2313
10.	TURBINE BUCKETS STAGE 2	FO	"	.0111
		SO		.0875
11.	TURBINE BUCKETS STAGE 3	FO	"	.0256
		SO		.0188
12.	TURB. NOZZLE & SHROUD STG. 1	FO	"	.05
		SO		.2687
13.	TB NOZ & SHD STG. 2	FO	N/A	.0033
		SO		17.5112

NOTE: T = TRANSFER FUNCTION

Table 3.10 Cont'd.

	HARDWARE	EVENT	T	FAILURE RATE EVENT/YEAR
14.	TURB NOZZLE & SHROUD STG 3	FO	N/A	.0022
		SO		.0075
15.	TURBINE ROTOR STRUCTURE	FO	"	0.1000
		SO		0.
16.	TURBINE STA. STRUCTURE	FO	"	0.0200
		SO		0.1500
17.	HOT GAS PATH INSP.	FO	"	N/A
		SO		
18.	BEARINGS (ADDS TO F-F)	FO	"	0.2000
		SO		0.0500
II	POWER PLANT ENG (PP) (19-56)	FO	.83	11.4112
		SO		127.3767
A.	POWER PLANT MECH (19-46)	FO	.69	2.7495
		SO		124.0353
A.	INLET, EXH AND ACOU (19-21)	FO	.41	0.3040
		SO		0.5710
19.	INLET	FO	1.0	0.0870
		SO		0.4650
20.	EXHAUST	FO	.83	0.2170
		SO		0.1060
21.	ACOUSTICS AND OTHERS	FO	1.0	0.
		SO		0.
B.	LOAD SYSTEM (22-25)	FO	.70	0.2075
		SO		0.3493
22.	GENERATOR	FO	.70	0.2075
		SO		0.3493
23.	LOAD COUPLING	FO	1.0	0.
		SO		0.
24.	LOAD GEAR	FO	1.0	0.
		SO		0.
25.	OTHER LOAD	FO	1.0	0.
		SO		0.
C.	FUEL SYSTEM (26-30)	FO	.97	0.5800
		SO		96.3010
26.	MAIN FUEL PUMP	FO	3.09	0.0290
		SO		0.0290
27.	FUEL FLOW DIVIDER	FO	1.21	0.0350
		SO		0.0180
28.	FUEL FILTERS	FO	1.5	0.1050
		SO		2.8200

Table 3.10 Cont'd.

	HARDWARE	EVENT	T	FAILURE RATE EVENT/YEAR
29.	OTHER FUEL	FO	.65	0.3210
		SO		25.434
30.	FUEL CONDITIONS SYSTEM	FO	--	0.0900
		SO		68.0000
D.	LUBE AND COOLING SYS (31-35)	FO	.59	0.2620
		SO		1.8290
31.	LUBE VAPOR EXTRACTOR	FO	1.0	0.0140
		SO		0.2020
32.	HEAT EXCHANGERS, HEATERS	FO	1.0	0.0290
		SO		0.1160
33.	LUBE/HYD. FILTERS	FO	1.0	0.0200
		SO		1.1100
34.	OTHER LUB/HYD.	FO	.50	0.1120
		SO		0.2710
35.	COOLWATER SYS (INCL NOZ)	FO	.55	0.0870
		SO		0.1300
E.	SUPPORT SYSTEM (36-39)	FO	.59	0.6070
		SO		0.3260
36.	FIRE PROTECTION	FO	.55	0.3340
		SO		0.0780
37.	ATOMIZING AIR COMPRESSOR	FO	.7	0.0910
		SO		0.0810
38.	OTHER ATOMIZING AIR	FO	.43	0.0870
		SO		0.0720
39.	OTHER SUPPORT	FO	1.0	0.0950
		SO		0.0950
F.	START AND ACC SYS (40-42)	FO	.97	0.1270
		SO		0.1150
40.	STARTING DEVICE	FO	1.0	0.0110
		SO		0.0200
41.	TURNING GEAR & OTHER START	FO	.92	0.0460
		SO		0.0250
42.	ACCESS GEAR & OTHERS	FO	1.0	0.0700
		SO		0.0700
G.	PLANT ARR & PACKAG (43+44)	FO	.91	0.4610
		SO		24.4540
43.	PIPING	FO	1.0	0.4470
		SO		0.3240
44.	OTHER ARR (INC WAT WASH & NUT)	FO	.24	0.0140
		SO		24.1300
H.	ENC LAG HEAT & VENT (45+46)	FO	.83	0.2010
		SO		0.0900

Table 3.10 Cont'd.

	HARDWARE	EVENT	T	FAILURE RATE EVENT/YEAR
45.	ENCLOSURES & LAGGING	FO	.80	0.162
		SO		0.034
46.	HEATING & VENTILATION	FO	1.0	0.039
		SO		0.056
B.	CONTROLS (GAS TURB) (47-51)	FO	.62	1.6791
		SO		2.3414
47.	ELECTRICAL CONTROLS	FO	.65	0.2000
		SO		0.4265
48.	ELECTRICAL POWER SYSTEMS	FO	1.0	0.2811
		SO		0.2293
49.	CONTROL DEVICES	FO	.55	0.9200
		SO		1.3478
50.	SYSTEMS (CONTROLS)	FO	1.0	0.1806
		SO		0.2660
51.	MISC CONTROLS	FO	0.	0.1000
		SO		0.0718
C.	STEAM CYCLE RELATED (52-56)	FO	1.0	6.9500
		SO		1.0000
52.	HEAT RECOVER STEAM GENERATOR	FO	1.0	3.0000
		SO		0.
A.	STEAM--EXCLUDING HRSG (53-56)	FO	1.0	3.9500
		SO		1.0000
53.	STEAM TURBINE	FO	1.0	1.5300
		SO		1.0000
54.	ST GENERATOR	FO	1.0	0.6300
		SO		0.
55.	CONDENSER & F W SYST (CUST)	FO	1.0	0.6800
		SO		0.
56.	BOP STEAM (CUST)	FO	1.0	1.1100
		SO		0.
57.	UNIDENTIFIED (GTD)	FO	1.0	1.4540
		SO		0.5110
58.	CUSTOMER/NON-GE EQUIP (58-63)	FO	1.0	0.2360
		SO		0.4040
59.	POWER TRANSFORMERS	FO	1.0	0.0130
		SO		0.0220
60.	HV CIRCUIT BREAKERS	FO	1.0	0.0070
		SO		0.0430
61.	HIGH VOLTAGE STRUCTURES	FO	1.0	0.
		SO		0.0290
62.	CUSTOMER SHUTDOWN	FO	1.0	0.
		SO		0.
63.	OTHER CUSTOMER EQUIPMENT	FO	1.0	0.2160
		SO		0.3100

Table 3.11

Maintenance Parameters For
Potential New Centerline Design

	FUEL			
	CASE 33		CASE 32	
	F.O.	S.O.	F.O.	S.O.
MMH Hours/Event	75	22	73	130
Matl.$K/Event	14523	5473	11359	34508
DT Hours/Event	45.4	4.5	45.8	36.9

Table 3.12

Theoretical Failure Rates For Flange To Flange Hardware For Configuration 4

F.O. - Failure Rates - Events/Fired Hour x 10^5

Hardware	FUEL Case 32 No. 2 Distillate	Case 33 No. 6 Residual
Comp. Bld. & Vanes	2.36	2.36
Comp. Rotor	0.606	0.606
Comp. Sta. Struct.	0.044	0.044
Comb. Liner & T/P	2.57	2.57
Comb. Casing	0.0	0.0
Fuel Nozzle & Comb.	5.57	5.57
Turb. Buckets St. 1	0.833	0.556
Turb. Buckets St. 2	0.119	0.159
Turb. Buckets St. 3	0.346	0.366
Turb. Nozzle & Shroud 1	0.119	0.714
Turb. Nozzle & Shroud 2	0.036	0.047
Turb. Nozzle & Shroud 3	0.024	0.031
Turb. Rotor Structure	1.43	1.43
Turb. Station. Structure	0.286	0.286
Turb. Bearings	2.857	2.857

Table 3.13

Reliability Results Task 3.0 Configurations
Cases 30 & 31

HARDWARE	EVENT TYPE	λ	HRS. PER YEAR	MTBF	AVAIL.	MAINT. COSTS	
GAS TURBINE COMBINED CYCLE POWER PLANT (1-63)	FO	14.40	652	530	87.1 * / 93.1	1.04	
	SO	13.01	481				
GT COMBINED CYCLE GE SCOPE (1-54 & 57)	FO	12.37	538	610	88.7	.98	
	SO	12.6	456				
GT ENGINEERING F-F (1-18)	FO	1.20	77	6300	96.9	.55	
	SO	2.48	196				
POWER PLANT MECHANICAL (19-46)	FO	2.84	82	2600	98.8	.12	
	SO	6.28	23				
GT CONTROLS (47-51)	FO	1.71	25	4500	99.5	.01	
	SO	2.34	17				
HRSG (52)	FO	3.0	108	2500	98.8	.02	
	SO	0	0				
OTHER STEAM CYCLE (53-56)	FO	3.95	337	1900	93.8	.29	
	SO	1.0	210				
CUSTOMER EQUIP. (55, 56, & 58-63)	FO	2.03	115	3800	98.4	.06	
	SO	.4	25				

* EQUIVALENT AVAILABILITY

CASE 30

Table 3.13 Cont'd.

HARDWARE	EVENT TYPE	λ	HRS. PER YEAR	MTBF	AVAIL.	MAINT. COSTS	
GAS TURBINE COMBINED CYCLE POWER PLANT (1-63)	FO	14.84	661	500	84.8 * / 90.9	1.66	
	SO	149	668				
GT COMBINED CYCLE GE SCOPE (1-54 & 57)	FO	12.81	546	580	86.5	1.60	
	SO	148	643				
GT ENGINEERING F-F (1-18)	FO	1.23	85	6000	94.7	1.05	
	SO	19.98	384				
POWER PLANT MECHANICAL (19-46)	FO	3.25	84	2300	98.8	.23	
	SO	124	25				
GT CONTROLS (47-51)	FO	1.71	25	4300	99.5	.01	
	SO	2.34	17				
HRSG (52)	FO	3.0	108	2500	98.8	.02	
	SO	0	0				
OTHER STEAM CYCLE (53-56)	FO	3.95	337	1900	93.8	.30	
	SO	1.0	210				
CUSTOMER EQUIP. (55, 56, & 58-63)	FO	2.03	115	3700	98.4	.06	
	SO	.4	25				

* EQUIVALENT AVAILABILITY

CASE 31

3.6 Value of Availability

What is the economic value of increased or decreased availability? The value of availability is a complex parameter which varies widely with specific power plant application conditions as well as the plant itself. It is difficult to define a general function for downtime costs, and once defined it is easily misused. The question is examined with two methods and the results are compared. The first method used the power cost formula. The second is the life cycle cost (LCC) method. The power cost formula approach evaluates the cost of energy for an entire plant configuration, whereas the LCC development evaluates the change in cost of varying the operating conditions and hardware configurations of the gas turbine, HRSG and steam turbine.

This section attempts to provide a rational perspective of the costs associated with downtime or availability. Using the power cost equation, values of downtime rates (FOH, SOH) are varied both separately and proportionally in order to determine the power cost and downtime cost effects of a change of 1 percent in availability. The cost of forced and scheduled availability changes are .29 and .16 mills/kWh per percent availability respectively (combined .22 mills/kWh per percent), for CF = Avail. and m = 1000. The letter (m) represents a specific power distribution grid size factor in the Power Cost equation from the EPRI Technical Assessment Guide (Appendix B). Sample calculations are provided in Table 3.14 which illustrate the formula manipulations and illustrate how the power cost equation can be used to predict the forced (DTC_{FO}) and scheduled (DTC_{SO}) downtime cost. For baseload duty with no reserve shutdown time for which capacity factor equals availability, it is estimated that DTC_{FO} = \$13/MWh and DTC_{SO} = \$7/MWh (1980 \$).

Downtime costs estimated from the LCC approach reveals reasonably close agreement with the power cost equation approach. Figure 3.35 shows downtime costs on a log-normal probability basis. The curves were generated based upon calculations utilizing LCC variables and reflect the large variability of downtime cost expected from site to site. From this figure, the median value of downtime is estimated to be DTC_{FO} = \$12/MWh and DTC_{SO} = \$6/MWh in 1980 \$.

Table 3.14

Power Cost Calculation and Value of Availability
Using Model Case 6

Sample Calculations, given:

$$\text{Power Cost} = \frac{\text{Levelized Capital}}{(CR)(CF)} + (1.886)(\text{labor \& matl.}) + \text{Fuel \& all other costs}$$

$$\text{Power Cost} = \frac{9.452}{(CR)(CF)} + 3.16 + 77.31$$

WHERE:

CF = Availability; FH = AH

$$CR = \frac{C_{NP} - m \ln (1 - r + re^{C_{NP}/m})}{C_{NP}}$$

C_{NP} = 100.3 mw

m = 1000

$$r = \frac{FOH}{FOH + AH} = \frac{FOH}{FOH + FH}$$

Case 6

FOH = 695.4 hrs/yr = $(DT_{FO})(\lambda)$

SOH = 668.4 hrs/yr = $(DT_{SO})(\lambda)$

THEN:

r = .085941

CR = .910009

CF = .844315

PC = 12.3019 + 3.16 + 77.31 = 92.77 Mills/kWh

Levelized power cost in 1980 dollars for unit to go commercial in 1989 before parametric changes are made in FOH and SOH. Downtime costs are 12.30 - 9.45 = 2.85 Mills/kWh or 3.1% of the power cost. Maintenance costs are 3.16 Mills/kWh or 3.4% of the power cost. In combination the R&M question represents 6 Mills/kWh or 6.5% of the power cost.

Table 3.14 Cont'd

1% Availability Improvement

1) If availability improves by FOH reduction, 2) If availability improves by SOH reduction, and 3) If availability improves by both proportionally.

CASE 6 REF.	1% AVAILABILITY CHANGE		
	FOH REDUCED, HRS	SOH REDUCED, HRS	FOH & SOH REDUCED PROPORTIONALLY, HRS
FOH = 695.4 Hrs	607.8	695.4	650.7
SOH = 668.4 Hrs	668.4	580.8	625.5
Availability = CF = .8443	.8543	.8543	.8543
Power Cost = 92.77 Mills/kWh	92.48	92.62	92.55
Decrease in Power Cost for 1% increase in availability	0.29 $\frac{\text{Mills}}{\text{kWh}}$	0.15 $\frac{\text{Mills}}{\text{kWh}}$	0.22 $\frac{\text{Mills}}{\text{kWh}}$

Table 3.14 Cont'd

Formula

A. (Power Cost) Equivalent Capital Investment

$$= \frac{(\text{Levelized Mills/kWH})\ (FH/YR)\ (C_{NP})}{FCR}$$

$$= \frac{(.2263)(7483.8)(100.3)}{.18} = \underline{\$944{,}000/GT}$$

B. (LCC) Equivalent Capital Investment

$$= (P)(L)(DT)(DTC)(C_{NP})(\lambda)$$

$$= (P)(L)(C_{NP})\ \ (\ FOH)(DTC_{FO}) + (\ SOH)(DTC_{SO})$$

$$= (.35)(30)(100.3)\ \ (44.7)(13.24) + (42.9)(7.09)$$

$$= \underline{\$944{,}000/GT}$$

SAME ANSWER

and,

$$(FOH)(DTC_{FO}) + (SOH)(DTC_{SO}) = \frac{(\text{Levelized Mills/kWh})\ (FH/YR)(C_{NP})}{(FCR)(P)(L)(C_{NP})}$$

$$= \frac{(\ \text{Mills/kWh})(FH/YR)}{1.89}$$

If SOH = 0

$$DTC_{FO} = \frac{(\ \text{Mills/kWh})(FH/YR)}{(1.89)(\ FOH)} = \$13.24/MWh^*$$

If FOH = 0

$$DTC_{SO} = \frac{(\ \text{Mills/kWh})(FH/YR)}{(1.89)(\ SOH)} = \$\ 7.09/MWh^*$$

*Note these downtime costs are expressed as $/MWh of downtime. This should not be confused with Power Cost even though they appear to have the same units.

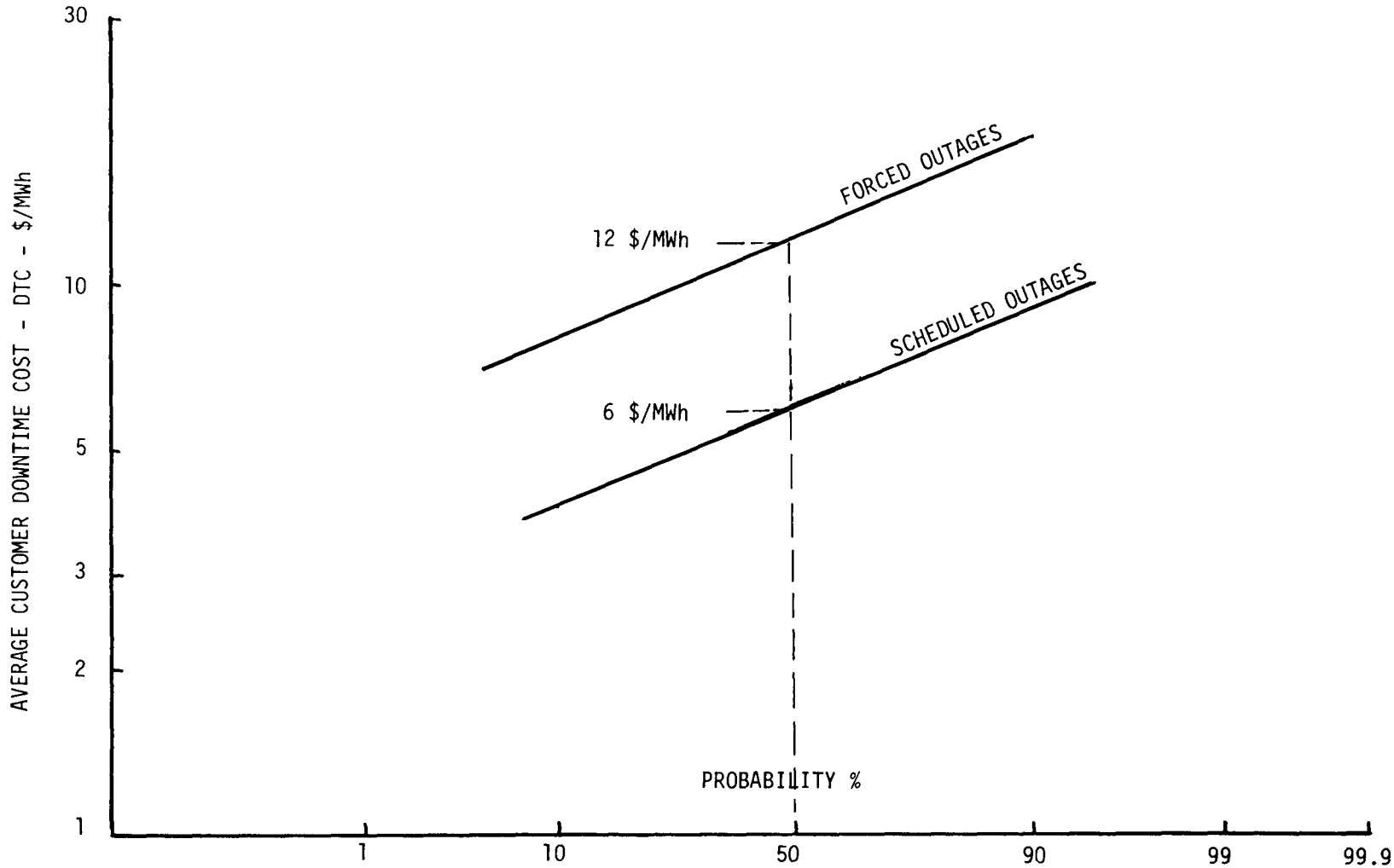

Figure 3.35: Probability Distribution of Downtime Costs for STAG Baseload Duty (1980 $)

Downtime costs can also be estimated where the reserve shutdown time is not zero or when the capacity factor does not equal availability. If the capacity factor is set low at 0.4, the power cost equation approach predicts the downtime costs to be DTC_{FO} = \$7/MWh and DTC_{SO}= \$0.6/MWh in 1980 \$. The LCC downtime estimates remain essentially unchanged at \$11/MWh and \$5/MWh because in the LCC calculations duty cycle is a second order effect. These downtime costs estimates are compared in Table 3.15. It appears that for the case where the plant is operated without reserve shutdown up to its full hardware availability (CF = availability) there is agreement on downtime costs between the power cost equation and LCC approaches; however, when the plant is not operated at its full hardware availability and the units have reserved shutdown (CF < availability) there is some variances between the two approaches. These differences are no doubt the result of the method of accessing the cost of replacement power. LCC approach attempts to estimate the actual cost of replacement power from the grid. The power cost equation does not directly identify replacement power cost. The power cost equation predicts a low value for scheduled downtime costs for operating in other than baseload duty and no reserve shutdown at \$0.6/MWh. On the other hand, LCC estimates for the value of downtime at \$6/MWh is independent of duty cycle. Unfortunately, neither approach is absolutely correct and the realistic value for downtime cost probably lies somewhere in between. Until such time as an acceptable downtime cost model is developed and/or until the utility industry generates a better general function for downtime cost values, it is suggested that the value of downtime be identified by each utility for its own specific operating parameters. The manufacturers reliability engineer can then better determine the amount of availability/reliability the utility can afford (cost effective standby/redundancy, etc.). However, for other sections of this report, the power cost equation was assumed to provide an adequate representation of downtime cost.

During the investigation into downtime cost, a question arose on the power cost equations handling of the value of simple-cycle power for multi-shaft STAG installations (i.e., the concept of equivalent availability). Simple-cycle power is available if a bypass exhaust system is

Table 3.15

Next Generation Downtime

Costs Estimate in Terms of
1980 $

	DUTY CYCLE			
	Capacity Factor = 0.4		Capacity Factor = Avail	
$/MWH	Power Cost	LCC	Power Cost	LCC
DTC_{FO}	7	11	13	12
DTC_{SO}	0.6	5	7	6

provided for the HRSG (multi-shaft STAG). A failure or scheduled maintenance event in the steam cycle hardware will not prevent the gas turbine from being operated simple cycle in peaking duty. Approximately 70 percent power is still available but at a fuel cost penalty (higher heat rate). The normal equivalent availability concept does not assess this fuel cost penalty because, by definition, the power is available. The power cost equation, on the other hand, has assessed steam cycle downtime to be of equal value to gas turbine cycle downtime; the value of simple-cycle power is thus ignored. It is obvious that both views have status but neither can adequately represent the other. Using the LCC downtime cost concept, both viewpoints can be evaluated. Since only 30 percent power is lost, only 30 percent of the reserve cost estimate should be charged; however, the increase energy cost must be paid, and should be charged in full. As a result, it is concluded that steam cycle downtime cost is worth 70 percent of gas turbine downtime cost. This conclusion should be viewed as a preliminary finding. A more definitive value of steam cycle downtime cost must wait for a much more comprehensive analysis.

All the preceding discussion on LCC was based on the life concept discussed in Appendix A. The LCC estimates shown in Figure 3.35 were developed using sensitivity studies of inputs to the equation used to calculate the downtime costs directly:

$$DTC = RC + \Delta EC$$

Where:

RC = Reserve cost estimate - a function of installed peaking power cost, levelized fixed charge rate, peaker duty cycle, and distributions of time to repair; a probability of needing peaking power is generated for each failure mode defined (Table 3.16).

ΔEC = Increased energy cost estimate - a function of heat rates and fuel prices of the system experiencing outage and the system producing make-up power, as well as a

Table 3.16

Probability of Need

		DUTY CYCLE		
		5 HRS/DAY CF = 0.15	14 HRS/DAY CF = 0.4	24 HRS/DAY CF = AVAILABILITY
*FAILURE DEFINITIONS	FORCED OUTAGE	.213 (CALC.)	.572 (CALC.)	1.0 (EST.)
	FORCED UNAVAILABILITY	.13 (EST.)	.4 (EST.)	1.0 (EST.)
	FAILURE TO START	.459 (CALC.)	.836 (CALC.)	1.0 (EST.)
	OTHER UNSCHEDULED MAINTENANCE	.1 (EST.)	.3 (EST.)	.6 (EST.)
	SCHEDULED MAINTENANCE	.06 (EST.)	.2 (EST.)	.4 (EST.)

* Includes all failure modes defined in the ORAP Failure Reporting System.

probability of needing the system experiencing outage for each failure mode (Table 3.16).

It was concluded that, using the LCC operational viewpoint of failure effects, downtime costs are quite similar for a baseloaded combined-cycle plant with no reserve shutdown. It is, however, apparent from Table 3.15 that for other than baseload operation, the downtime costs developed by the LCC and power cost equation are approximation to the actual utility values.

3.7 System Level Redundancy

3.7.1 Introduction

This section of the report attempts to evaluate the value of redundancy within the combined-cycle plant at the gas turbine level. It is believed that the methods and results presented in the following sections are a good start toward understanding and subsequently establishing usable methodology for trading-off the value of redundancy at the gas turbine level. However, as with Section 3.6, this area of investigation is highly subject to a multitude of parameters which may vary with each installation; notably fuel costs and hours of operation. The results are predicated upon specific fuel costs of 3.58 $/MBtu and 4.00 $/MBtu for residual and distillate fuel, respectively, as set in the EPRI Technical Assessment Guide, and for baseload operation. Accordingly, it is envisioned that a more in-depth analysis will factor in specific site parameters such as fuel costs, make-up power costs, actual hours of operation (which may not be baseload), demand charges, downtime costs and other factors which are collectively beyond the scope of analysis as it is conducted here. For example, the basis for this study assumed fuel costs for fuels not currently used for baseload application. In the electric utility industry coal fuel costs, which are being used for baseload applications today, are ranging approximately from 1.25 to 1.50 $/MBtu.

The case for redundancy can be approached as presented below. In Task 3.0, the final improvements were introduced for gas turbine reliability

and maintainability in the model (described in Section 3.5). However, when examined on a relative basis, the improvement in the gas turbine and overall plant reliability is found to be smaller than desired even though the changes were very significant at the component level. It becomes apparent, that relative to hardware reliability improvements, the gas turbine is being governed by the law of diminishing returns.

This situation focuses attention on minimizing the effects of a gas turbine outage on the next larger system. The next larger system is the multi-shaft STAG system in our model. In this analysis, it is assumed that a redundant gas turbine and HRSG is included in the system. Although in this analysis the GT/HRSG is not more reliable, the effect on the combined cycle system reliability is evaluated. Changes in plant availability and power cost are studied and compared.

3.7.2 Analytical Approaches

The reliability trade-off studies started under Task 2 were expanded to include analyses of redundancy for the gas turbine and HRSG in the combined-cycle system. The reliability block diagram shown in Figure 2.59 is still the basic model, modified for two plant sizes. The plant sizes analyzed are one STAG 400 vs. one STAG 400 with a 5th GT/HRSG and two STAG 400's vs. two STAG 400's with a 9th GT/HRSG. Reliability block diagrams of these arrangements are shown in Figures 3.36 and 3.37. The original name plate ratings of the STAG 400 plants are not changed by the addition of the redundant GT/HRSG. The 5th GT/HRSG in one STAG 400 can be expressed as a success of four out of five units (4/5); the 9th GT/HRSG in two STAG 400's can be expressed as a success of eight out of nine units (8/9). The failure and downtime rates and hardware configurations are taken directly from cases 30 and 31 for definition of the redundant plant. Refer to Section 3.5 for this information. By implementing redundancy at this system level, the downtime costs of the gas turbine are reduced. The probabilities of gas turbine outages are not reduced, but the effects of those gas turbine outages seldom cause combined-cycle system outages. It is assumed that the sole purpose for the 5th or 9th gas turbine is to provide redundancy for combined-cycle power. The added capability to

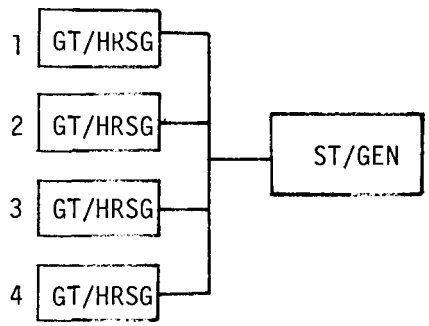

STANDARD BLOCK DIAGRAM

4 OUT OF 4 NEEDED FOR FULL LOAD

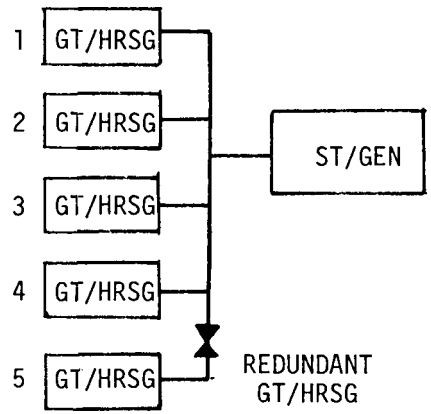

REDUNDANT BLOCK DIAGRAM

4 OUT OF 5 NEEDED FOR FULL LOAD

Figure 3.36: Reliability Block Diagrams of Redundancy Tradeoff in STAG 400

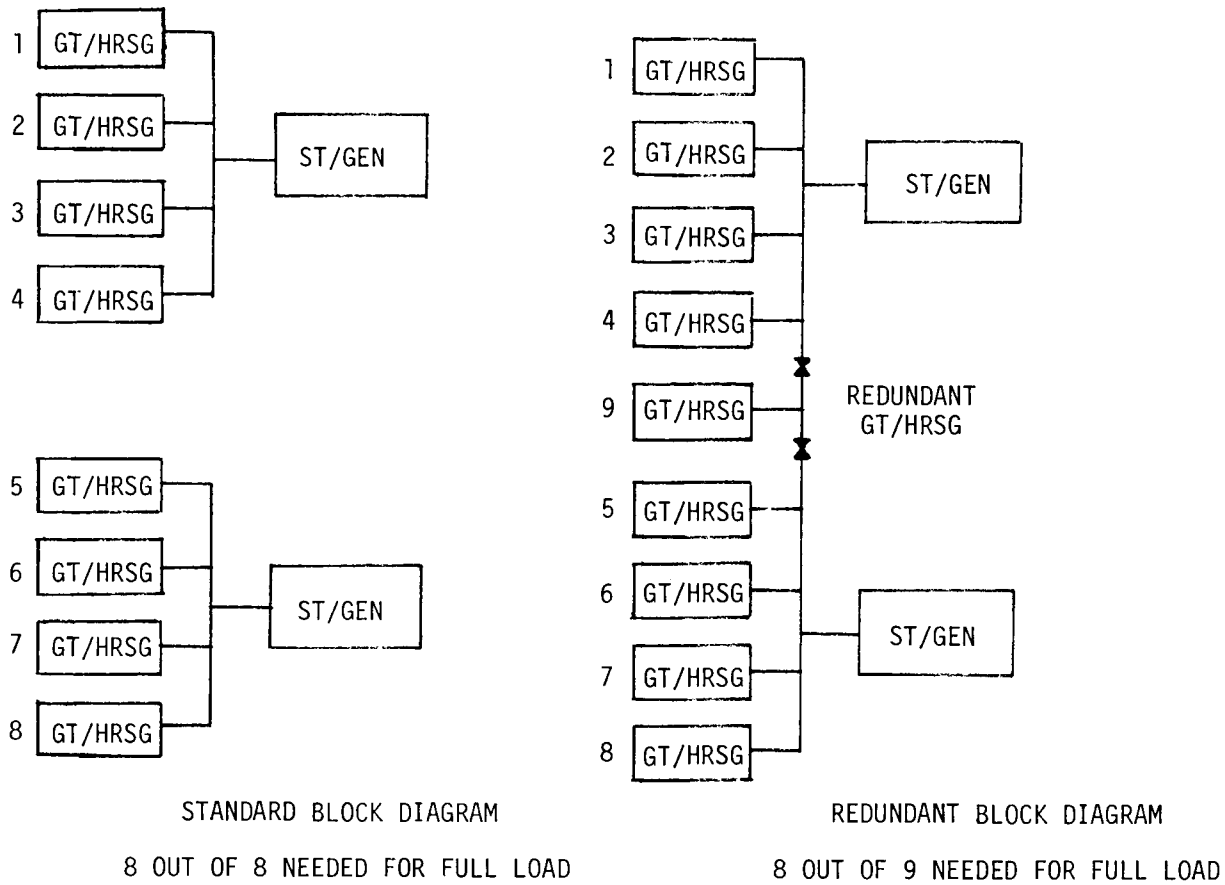

Figure 3.37: Reliability Block Diagrams of GT/HRSG Redundancy Tradeoff in 2 STAG 400's

produce simple-cycle as well as combined cycle power, should the demano arise while the redundant GT/HRSG is in a standby mode, is a potential added benefit which was not evaluated. This assumption is made for simplicity purposes.

The first analytical approach used the power cost equation in which the reduction of combined-cycle downtime causes an increase in capacity ratio, as well as a potential increase in capacity factor. These increases reduce power costs which determine break even conditions with respect to make-up power costs. It is practical to almost completely eliminate GT/HRSG scheduled outages, as well as to minimize forced outages. Alternatively, it is practical to minimize forced outages even more, at the expense of sustaining scheduled outages. The choice would be made on the basis of the specific scheduled outage downtime cost in question, which is expressed by the variation in capacity factor. The basis for evaluation is minimum power cost. The assumptions for the power cost analysis are shown in Table 3.17.

A second way of performing the same analysis is to examine the make-up power source fuel cost which must be paid when a combined-cycle gas turbine is down, versus the capital cost increase required for redundancy. That is, determining the break even conditions for make-up power sources with respect to heat rates and/or fuel prices. This analysis has the advantage of being relatively simple, and provides an intuitive feel for a major portion of the economic picture. In this analysis, it is more apparent that the final decision is dependent on specific site conditions and fuel cost. It was concluded that the results from both analyses tend to reinforce the other, and that under specific conditions, a case can be made for gas turbine and HRSG redundancy.

3.7.3 Power Cost Trade-off Analysis Summary

Quantitative results from the redundancy analysis based upon the power cost equation are summarized in Figures 3.38-3.40 and in Table 3.18-3.21. Table 3.18 summarizes power costs in mills/kWh for the redundancy cases of four out of five, eight out of nine for both dis-

Table 3.17

Inputs & Assumptions For Redundancy Evaluation
Using Power Cost Equation

1. The increased capability to produce both simple cycle power and combined cycle power should the demand arise while the redundant GT/HRSG is in a standby mode is an added benefit but is not evaluated in this analysis.

2. GT/HRSG starting reliability is 93%. Failure to start MTTR is 1.9 hours.

3. Additional time to start the 9th GT/HRSG is 0.2 hours to 1.0 hour range--does not have a significant effect on results.

4. Two operational/maintenance planning modes are assumed which should be considered upper and lower bounds in the real world.
    1. The customer minimizes scheduled outage downtime when the spare GT/HRSG is available at an increased risk of forced outage (random basis).
    2. The customer minimizes only forced outage downtime with the spare GT/HRSG.

5. Two sets of downtime costs are assumed which should be considered upper and lower bounds in the real world.
    1. Capacity factor is limited only by availability, thus both forced and scheduled downtime cost values are significant (perferable assumption).
    2. Capacity factor is preset and is not limited by availability, thus only the forced downtime cost value is significant.

6. Assumptions 4.1 and 5.1 are consistent, and assumptions 4.2 and 5.2 are consistent. Coupling either assumptions 4.1 and 5.2 or assumptions 4.2 and 5.1, however, would be inconsistent. If scheduled downtime cost is high scheduled downtime would be eliminated. If scheduled downtime cost is insignificant then no motive exists to eliminate scheduled downtime with the redundant GT/HRSG.

7. Attendant with the assumption that the capacity factor is limited only by availability, it is assumed that m = 1000. Attendant with the assumption that the capacity factor is 0.7 (affected by neither forced nor scheduled downtime), it is assumed that m = 100.

Table 3.17 Cont'd.

8. Nameplate rating (C_{NP}) of the plant does not change with the addition of the redundant GT/HRSG: Dist. = 104.3 MW, and resid. = 100.3 MW (Ref. Figure 2.57, Task 2). Note, that it is very unlikely the system would actually be marketed without a nameplate rating increase. This assumption is for analysis simplicity only.

9. In the power cost equation, the redundant GT/HRSG increases the capital cost term numerator by .8 and .4 mills/kWh if 4 out of 5 and 8 out of 9 redundancy is chosen, respectively.

10. Maintenance costs (L&M) increase (due to the addition of hardware and complexity) by .1 and .05 mils/kWh if 4 out of 5 and 8 out of 9 redundancy is chosen, respectively.

11. The random treatment of forced outage hours (FOH) is the standard binomial equation given Q is .036 and .037 for dist. and resid., respectively (forced outage factor) and P = 1-Q.

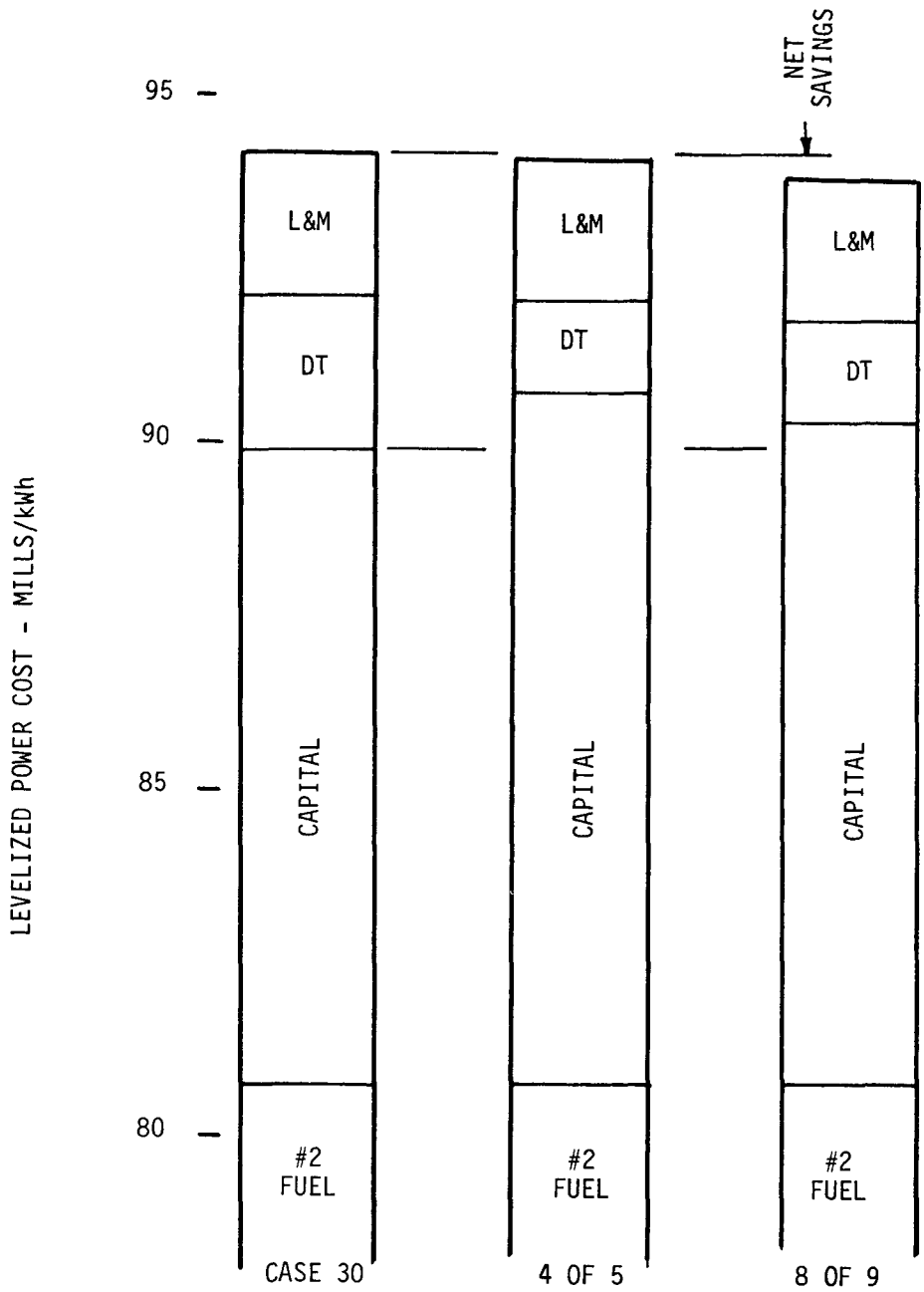

Figure 3.38: Power Cost Results - Distillate Fuel
(CF = Avail., 1980 $)

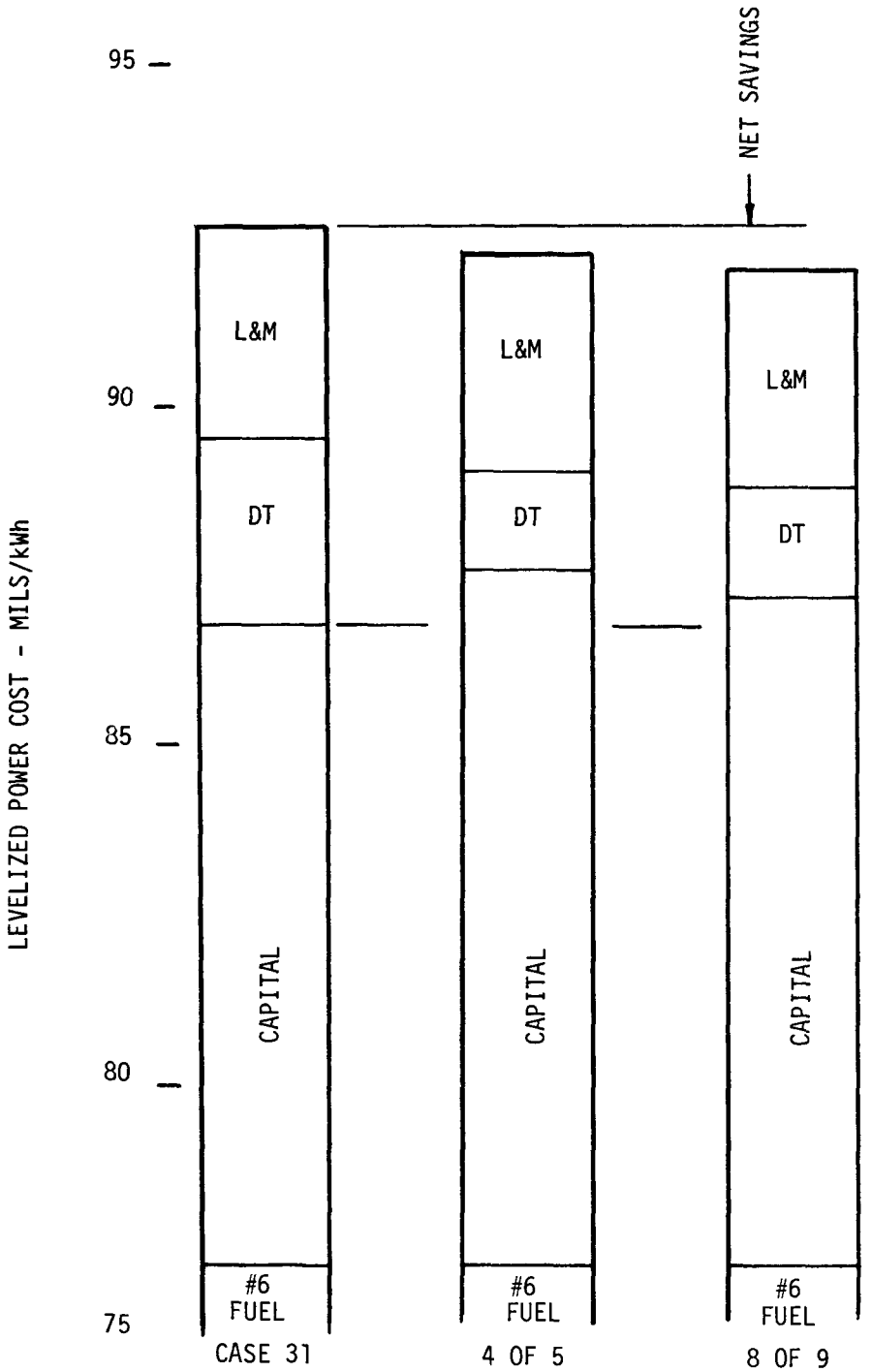

Figure 3.39: Power Cost Results - Residual Fuel
(CF = Avail., 1980 $)

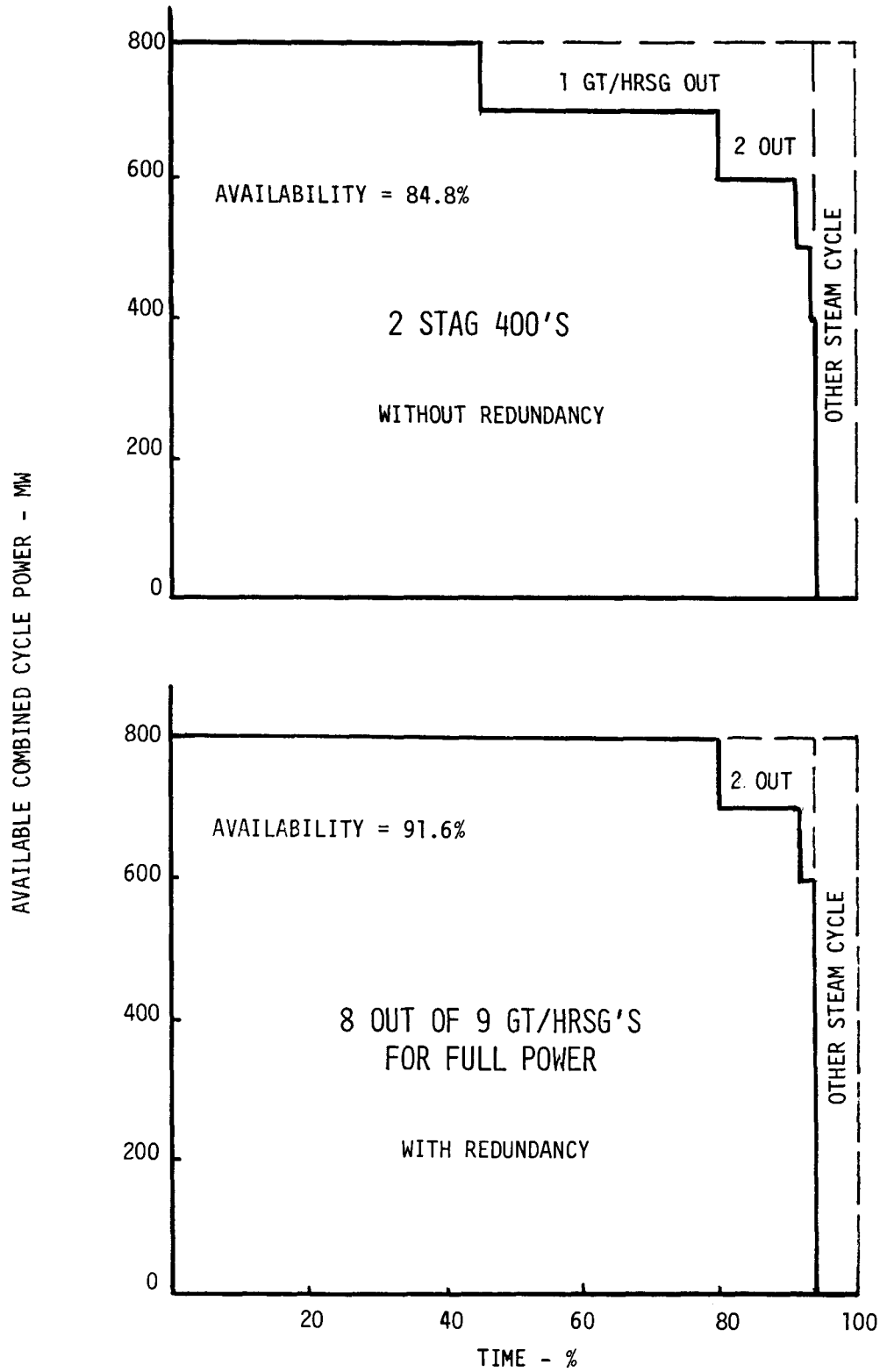

Figure 3.40: Availability Profile Comparison
(No. 6 Resid., CF = Avail.)

Table 3.18

Summary of Power Cost With and Without Redundancy

Power Cost, $\frac{\text{Mills}}{\text{kWh}}$

		One STAG 400				Two STAG 400's			
		With Redundancy		Without Redundancy		With Redundancy		Without Redundancy	
		4 Out of 5		4 Out of 4		8 Out of 9		8 Out of 8	
	Fuel	#2	#6	#2	#6	#2	#6	#2	#6
Capacity Factor, CF	.4	109.78	108.50	108.93	107.68	108.95	107.91	108.93	107.68
	.7	98.23	96.55	97.70	96.00	97.75	96.15	97.70	96.00
	Avail.	94.06	92.25	94.15	92.64	93.72	92.00	94.15	92.64

#2– Distillate Fuel

#6– Residual Fuel

Table 3.19

Summary of Net Savings or Loss With Redundancy - Special Case of Redundant Unit Fuel Cost and Make-up Fuel Cost are Same

	CF	Fuel	Power Cost, $\frac{\text{Mills}}{\text{kWh}}$ [1]	Equivalent Capital Investment [1]
Redundancy 8 Out of 9	Availability .923	#2	+.43	+$2 M/GT +$16 M/Plant
	Availability .916	#6	+.64	+$3 M/GT +$24 M/Plant [2]
	.7	#2	-.05	-$0.2 M/GT -$1.5 M/Plant
		#6	-.15	-$0.5 M/GT -$ 4 M/Plant
	.4	#2	-.02	-$0.04 M/GT -$0.3 M/Plant
		#6	-.23	-$0.5 M/GT -$ 4 M/Plant
Redundancy 4 Out of 5	Availability .93	#2	+.09	+$0.4 M/GT +$1.8 M/Plant
	Availability .926	#6	+.39	$1.8 M/GT $ 7 M/Plant
	.7	#2	-.53	-$1.9 M/GT -$ 8 M/Plant
		#6	-.55	-$1.9 M/GT -$ 8 M/Plant
	.4	#2	-.85	-$1.8 M/GT -$ 7 M/Plant
		#6	-.82	-$1.6 M/GT -$6.6 M/Plant

NOTE: 1 Minus Signs mean a net loss

2 Example: $\dfrac{\left(.64 \dfrac{\text{Mill}}{\text{kWh}}\right) (8024 \text{ FH/Unit YR}) (103.6 \text{ MW})}{.18 \text{ Fixed Charge Rate}} = \$3 \text{ M/GT}$,

Multiply by 8 for Plant: 8 Units x $3M/GT = $24 M/Plant.

Table 3.20

Summary of Important Parameters

(Resid, CF = Avail, m = 1000)

Plant/ Success	No Redundancy 8 Out Of 8 Case 31	With Redundancy 8 Out of 9 Case 35
Combined Cycle Level		
• Total Power Cost, Mills/kWh	92.64	92.00
• Net Power Cost Savings Mills/kWh	----	+ 0.64
• Availability, %	84.8	91.6
• Forced Outage Rate, %	8.2	6.2
GT/HRSG Level		
• Availability, %	91.1	97.8
• Forced Outage Rate, %	4.0	2.2
GT Simple Cycle Level		
• Availability, %	92.3	98.6
• Value of 1% Increase in Avail. - Mills/kWh	.22	.11
• Downtime Costs-$/MWH FO	13	8.2
SO	7	3.5

tillate and residual fuels. For comparison, a single STAG 400 and two STAG 400's are listed without redundancy. Operating hours of the units are shown as a variable, i.e., capacity factor equals 0.4, 0.7 and availability, where the machine runs the maximum time possible.

The power cost values shown in Table 3.18 can be used to make the decision of purchasing make-up power due to a unit outage or to provide the make-up power with a 5th or 9th redundant GT/HRSG on site. For example, in the redundant case of eight out of nine at capacity factor equal to availability with residual fuel, the power cost is 92.0 mills/kWh. If make-up power is available and it costs more than 92.0 mills/kWh, then redundancy is cost effective. If the purchased make-up power cost is less than 92.0 mills/kWh, then redundancy is not cost effective. Consequently, the power cost values in the table are essentially break-even values for evaluating redundancy. The redundancy decision can only be made when the cost of make-up purchased power is known.

However, a specific decision can be made for the special case of constant fuel cost for the prime and redundant units, such as the situation in a self-contained power plant. Since the fuel costs are constant, the only variable power cost elements are downtime and capital costs, as shown in Figures 3.38 and 3.39, which provide graphical comparisons. When four out of five redundancy is implemented, downtime costs are reduced significantly but capital cost increases eliminate all or most of any potential gain. When the redundant turbine is shared between eight turbines instead of four, the capital cost increase is cut in half. Although the downtime cost increases slightly, the net result is a reduction in power cost for this case. Table 3.18 provides the break-even values in terms of power cost for which a decision can be made by comparing power costs of plants with redundancy vs. no-redundancy for this special case. For example, the redundant case of eight out of nine at a capacity factor equal to availability with residual fuel, the power cost is 92.00 mills/kWh, compared to 92.64 mills/kWh for the no-redundancy case of eight out of eight. This results in a savings which is worth up to $24 million in equivalent capital investment. Conversely, it is shown that a redundant case of

four out of five with CF = 0.7 could result in a loss of up to $8 million. A summary of the net savings and loss derived from Table 3.18 is shown in Table 3.19. This comparison shows that the cost effectiveness of GT/HRSG redundancy is dependent upon specific conditions associated with the application and operation of the plant as well as the size of the plant. The net savings shown are the major result of operating the plant baseload. Net losses are incurred for lower capacity factors.

Important reliability and cost parameters are given in Table 3.20 for one specific set of trade-off conditions at the combined-cycle, gas turbine/HRSG and simple-cycle levels of the overall plant. For these comparisons, the eight out of nine redundancy case is selected over the four out of five because eight out of nine has the larger benefit favoring redundancy. At the gas turbine level, the values are applicable to any or all hardware which is required to generate simple-cycle power; however, the hardware must be part of the combined-cycle system in order for the parameters to be valid. Downtime costs are expressed two ways. The first is the value of 1 percent increase in availability, expressed in mills/kWh of generated power, as with any power cost constitutent. The second, downtime costs, however, are directly related to downtime and only indirectly related to operational time. For this reason, it is more useful to express downtime in $/MWh in which the hour is in downtime hours. Downtime cost is provided for both forced and scheduled outages. The product of downtime cost and the nameplate rating represents the value of a downtime hour to the operator: nominally $1300/hr for forced outages and $700/hr for scheduled outages. The important point is that normal reliability parameters such as availability and forced outages are improved considerably and downtime costs are halved if redundancy is implemented. The negative effect of a gas turbine or HRSG outage is minimized by GT/HRSG redundancy.

Combined-cycle system standard availability can be as high as 91.6 percent with eight out of nine redundant GT/HRSG's on residual fuel. Figure 3.40 shows an availability profile comparison with and without redundancy, which pictorially explains the quantitative availability

advantage of redundancy. These profiles are similar to those presented in Figure 2.55 with the exception that only combined-cycle power is being considered. Both the HRSG and other steam cycle hardware are single point failure modes to the generation of combined-cycle power. The area under the curve represents availability. Unavailability caused by the GT/HRSG loop is easily discernible from unavailability caused by other steam hardware. Figure 3.40 does not, however, show the additional simple-cycle power which is available. In this eight out of nine case on residual fuel, for example, approximately 870 MW of power is actually available for about 40 percent of the time.

The plant with eight out of nine redundancy is displayed in terms of the line item plant model, introduced in Task 1.0, as shown in Table 3.21. Cases 34 and 35 are assigned for #2 distillate and #6 residual fuels, respectively. Since the redundancy analysis was conducted on the basis of availability parameters directly, rather than failure rate and downtime hours per event, failure rates and MTBF values are not available.

3.7.4 Power Cost Trade-Off Analysis Details

Table 3.22 shows the power cost constitutency with and without redundancy. Likewise availability constitutents are shown in terms of both availability and downtime rates. It can be seen that, if redundancy is chosen, the weak link in the reliability chain is the other steam cycle hardware. In addition, a direct comparison is made between cases using #2 and #6 fuels.

Table 3.23 provides the same data assuming CF is a constant 0.7, m=100 and scheduled outage downtime cost is very low. It follows that the redundancy is used to minimize forced outage downtime as much as possible. Scheduled downtime is not eliminated as in Table 3.22, therefore availability improvements are less.

Table 3.24 compares the eight out of nine results with the four out of five results. It is shown that the redundant gas turbine/HRSG must be shared by a relatively large number of prime gas turbines in order to

Table 3.21

Reliability Parameters for Redundant System Cases 34 & 35

HARDWARE	EVENT TYPE	λ	HRS. PER YEAR	MTBF	AVAIL.	MAINT. COSTS	
GAS TURBINE COMBINED CYCLE POWER PLANT (1-63)	FO	N/A	466	N/A	92.3	1.08	
	SO	1.0	210				
GT COMBINED CYCLE GE SCOPE (1-54 & 57)	FO	N/A	352	N/A	93.5	1.02	
	SO	1.0	210				
GT ENGINEERING F-F (1-18)	FO	N/A	33	N/A	99.6	.58	
	SO	0	0				
POWER PLANT MECHANICAL (19-46)	FO	N/A	31	N/A	99.6	.11	
	SO	0	0				
GT CONTROLS (47-51)	FO	N/A	11	N/A	99.9	.01	
	SO	0	0				
HRSG (52)	FO	N/A	45	N/A	99.5	.02	
	SO	0	0				
OTHER STEAM CYCLE (53-56)	FO	3.95	337	1900	93.8	.30	
	SO	1.0	210				
CUSTOMER EQUIP. (55, 56, & 58-63)	FO	N/A	110	N/A	98.7	.06	
	SO	0	0				

CASE 34

Table 3.21 Cont'd.

HARDWARE	EVENT TYPE	λ	HRS. PER YEAR	MTBF	AVAIL.	MAINT. COSTS	
GAS TURBINE COMBINED CYCLE POWER PLANT (1-63)	FO	N/A	526	N/A	91.6	1.73	
	SO	1.0	210				
GT COMBINED CYCLE GE SCOPE (1-54 & 57)	FO	N/A	410	N/A	92.9	1.67	
	SO	1.0	210				
GT ENGINEERING F-F (1-18)	FO	N/A	52	N/A	99.4	1.10	
	SO	0	0				
POWER PLANT MECHANICAL (19-46)	FO	N/A	45	N/A	99.5	.23	
	SO	0	0				
GT CONTROLS (47-51)	FO	N/A	15	N/A	99.8	.01	
	SO	0	0				
HRSG (52)	FO	N/A	64	N/A	99.3	.02	
	SO	0	0				
OTHER STEAM CYCLE (53-56)	FO	3.95	337	1900	93.8	.32	
	SO	1.0	210				
CUSTOMER EQUIP. (55, 56, & 58-63)	FO	N/A	111	N/A	98.7	.06	
	SO	0	0				

CASE 35

Table 3.22

GT/HRSG Redundancy Evaluation

CF = Availability m = 1000

			NO REDUNDANCY		REDUNDANCY	
SUCCESS DEFINITION			8 OUT OF 8		8 OUT OF 9	
FUEL			DIST	RESID	DIST	RESID
LEVELIZED POWER COST MILLS/kWh	NET SAVINGS		---	---	.43	.64
	TOTAL PC		94.15	92.64	93.72	92.00
	FUEL (& CONST)		80.76	77.31	80.76	77.31
	CAPITAL		9.12	9.46	9.52	9.86
	DOWNTIME		2.31	2.74	1.42	1.65
	L&M (MAINT)		1.96	3.13	2.01	3.18
VALUE OF 1% GT AVAILABILITY*			.21	.21	.09	.11
COMB CYCLE AVAILABILITY - %			87.1	84.8	92.3	91.6
r FACTOR			.079	.082	.054	.062
COMPONENT AVAILABILITY - %	GT/HRSG		93.3	91.1	98.5	97.8
	OTHER STEAM		93.8	93.8	93.8	93.8
DOWNTIME RATES - HRS PER UNIT YEAR	TOTAL	FOH	653	662	466	526
		SOH	481	668	210	210
	GT/HRSG	FOH	316	325	129	189
		SOH	271	458	0	0
	OTHER STEAM	FOH	337	337	337	337
		SOH	210	210	210	210
GT DOWNTIME COSTS - $/MWh		DTC_{FO}*	12	13	5.8	8.2
		DTC_{SO}*	6.5	7	3.2	3.5

*AT GT LEVEL (ALL OTHER PARAMETERS AT SYSTEM LEVEL)

Table 3.23

GT/HRSG Redundancy Evaluation

CF = 0.7 m = 100

			NO REDUNDANCY		REDUNDANCY	
SUCCESS DEFINITION			8 OUT OF 8		8 OUT OF 9	
FUEL			DIST	RESID	DIST	RESID
LEVELIZED POWER COST MILLS/kWh	NET SAVINGS		---	---	.16	.20
	TOTAL PC		97.70	96.00	97.54	95.80
	FUEL (&CONST)		80.76	77.31	80.76	77.31
	CAPITAL		13.03	13.51	13.60	14.09
	DOWNTIME		1.95	2.05	1.17	1.21
	L&M (MAINT)		1.96	3.13	2.01	3.18
VALUE OF 1% GT AVAILABILITY*			.13	.13	.04	.04
COMB CYCLE AVAILABILITY - %			87.1	84.8	90.1	87.9
FACTOR			.079	.082	.047	.048
COMPONENT AVAILABILITY - %	GT/HRSG		93.3	91.1	96.3	94.2
	OTHER STEAM		93.8	93.8	93.8	93.8
DOWNTIME RATES - HRS PER UNIT YEAR	TOTAL	FOH	653	662	387	390
		SOH	481	668	481	668
	GT/HRSG	FOH	316	325	50	53
		SOH	271	458	271	458
	OTHER STEAM	FOH	337	337	337	337
		SOH	210	210	210	210
GT DOWNTIME COSTS - $/MWh		DTC_{FO}*	6	7	2	2
		DTC_{SO}*	.5	.6	.5	.6

*AT GT LEVEL (ALL OTHER PARAMETERS AT SYSTEM LEVEL)

Table 3.24

Comparison of One STAG 400 With GT/HRSG Redundancy

CASE DEFINITION			COMB. CYCLE AVAILABILITY %	r	POWER Cost *	SAVINGS PC
CONFIG.	FUEL	CF				
STAG 400 (4 Out of 4)	Dist	Avail.	87.1	.079	94.15	-----
		.7	87.1	.079	97.70	-----
	Resid	Avail.	84.8	.082	92.64	-----
		.7	84.8	.082	96.00	-----
4 Out of 5	Dist	Avail	93.0	.048	94.06	+.09
		.7	90.3	.044	98.15	-.45
	Resid	Avail	92.6	.051	92.25	+.39
		.7	88.2	.046	96.40	-.40
8 Out of 9	Dist	Avail.	92.3	.054	93.72	+.43
		.7	90.1	.047	97.54	+.16
	Resid	Avail.	91.6	.062	92.00	+.64
		.7	87.9	.048	95.80	+.20

*30 YR Levelized Power Cost - Mills/kWh - 1980 Dollars

be cost effective. It is not apparent where the optimum level of redundancy lies from these studies. This is due partly to the relatively small number of cases that were evaluated and partly to limitations in the model.

Analysis details are given in Table 3.25 in two parts, for cases where the redundant GT/HRSG is used to eliminate all scheduled outage combined-cycle downtime, which would otherwise be caused by the GT/HRSG. Part B provides the bi-nominal equation terms which represent The random treatment of the probability that a specific number of GT/HRSG's are not forced out at any random point in time, given that the redundant GT/HRSG is not being used at that time to eliminate scheduled outage downtime. Part B also provides the calculated constitutents of the GT/HRSG forced outage downtime rates which are then used in part A. It is shown that if redundancy is chosen, the order of FOH contribution is; 1) a forced outage occurs while the redundant GT/HRSG is being used to eliminate scheduled outage downtime, 2) two or more GT/HRSG's are forced out simultaneously, 3) following a forced outage, it takes time to start the redundant turbine, and 4) combination of a forced outage and a failure to start the redundant turbine.

Table 3.25, part A, shows added downtime rates from other steam cycle hardware and combined-cycle fired hours per gas turbine unit year. Part A also shows combined-cycle plant level values of downtime rates, availability, r factor, capacity ratio, the capital cost term before and after division by CR and CF, the maintenance cost term, a term for all constants, and total power cost.

In the same manner, analysis details are given in Table 3.26 for cases where the redundant GT/HRSG is not used to eliminate any scheduled outage downtime. Since scheduled outage downtime is not eliminated, availability improvements are less, but forced outage downtime is minimized as much as possible.

Table 3.27 provides results for additional cases, which verify the results of Section 3.6, that downtime costs are constant when expressed as costs per downtime hour. Consistent results are shown for CF = .4

Table 3.25

Analysis Details with SOH Reduced to Zero for Redundant Systems

Part A

			NO REDUNDANCY		WITH GT/HRSG REDUNDANCY			
SUCCESS DEFINITION			4 OF 4 or 8 OF 8		4 OUT OF 5		8 OUT OF 9	
CF ASSUMPTION			DIST.	RESID.	DIST.	RESID.	DIST.	RESID.
			AVAIL./.7	AVAIL./.7	AVAIL./.7	AVAIL./.7	AVAIL./.7	AVAIL./.7
COMBINED CYCLE POWER PLANT	FOH Hrs/GT Unit Yr.		653	662	407	438	466	526
	SOH Hrs/GT Unit Yr.		481	668	210	210	210	210
	AVAIL. (FRACTION)		.871	.848	.930	.926	.923	.916
	r		.079	.082	.048	.051	.054	.062
	CR		.917/.87	.914/.868	.950/.920	.946/.916	.943/.909	.935/.899
	CAPITAL & DT NUMERATOR		9.12	9.46	9.92	10.26	9.52	9.86
	CAPITAL & DT TERM		11.43/14.98	12.20/15.56	11.24/15.41	11.71/16.01	10.94/14.98	11.51/15.66
	1.836 L&M		1.96	3.13	2.06	3.23	2.01	3.18
	CONSTANTS (FUEL, ETC.)		80.76	77.31	80.76	77.31	80.76	77.31
	PWR. COST Mills/kWh		94.15/97.7	92.64/96.0	94.06/98.23	92.25/96.55	93.72/97.75	92.00/96.15
GT & HRSG	FOH		316	325	70	101	129	189
	SOH		271	458	0	0	0	0
	FH/GT UNIT YR (CC)	4 or 8 GT Basis	7626/6132	7430/6132	8143/6132	8112/6132	8084/6132	8024/6132
		5 or 9 GT Basis	N/A	N/A	6514/4906	6490/4906	6467/5451	6419/5451
OTHER STEAM CYCLE	FOH		337	337	337	337	337	337
	SOH		210	210	210	210	210	210

Table 3.26

Analysis Details with SOH Unchanged for Redundant Systems

Part A

		NO REDUNDANCY		WITH GT/HRSG REDUNDANCY			
SUCCESS DEFINITION		4 OF 4 or 8 OF 8		4 OUT OF 5		8 OUT OF 9	
CF ASSUMPTION		DIST.	RESID.	DIST.	RESID.	DIST.	RESID.
		AVAIL./.7	AVAIL./.7	AVAIL./.7	AVAIL./.7	AVAIL./.7	AVAIL./.7
COMBINED CYCLE POWER PLANT	FOH Hrs/GT Unit Yr.	653	662	368	369	387	390
	SOH Hrs/GT Unit Yr.	481	668	481	668	481	668
	AVAIL. (FRACTION)	.871	.848	.903	.882	.901	.879
	r	.079	.082	.044	.046	.047	.048
	CR	.917/.87	.914/868	.953/.925	.952/.924	.951/.921	.949/.920
	CAPITAL & DT NUMERATOR	9.12	9.46	9.92	10.26	9.52	9.86
	CAPITAL & DT TERM	11.43/14.98	12.20/15.56	11.53/15.33	12.22/15.85	11.12/14.77	11.81/15.30
	1.836 L&M	1.96	3.13	2.06	3.23	2.01	3.18
	CONSTANTS (FUEL, ETC.)	80.76	77.31	80.76	77.31	80.76	77.31
	PWR. COST Mills/kWh	94.15/97.7	92.64/96.0	94.35/98.15	92.77/96.40	93.89/97.54	92.30/95.80
GT & HRSG	FOH	316	325	31	32	50	53
	SOH	271	458	271	458	271	458
	FH/GT UNIT YR (CC) — 4 or 8 GT Basis	7626/6132	7430/6132	7911/6132	7723/6132	7892/6132	7702/6132
	FH/GT UNIT YR (CC) — 5 or 9 GT Basis	N/A	N/A	6329/4906	6178/4906	7015/5451	6846/5451
OTHER STEAM CYCLE	FOH	337	337	337	337	337	337
	SOH	210	210	210	210	210	210

Table 3.26 Cont'd.

Analysis Details with SOH Reduced to Zero for Redundant Systems

Part B

			NO REDUNDANCY		WITH GT/HRSG REDUNDANCY			
SUCCESS DEFINITION			4 OF 4 or 8 OF 8		4 OUT OF 5		8 OUT OF 9	
			DIST.	RESID.	DIST.	RESID.	DIST.	RESID.
GT & HRSG (DETAILS)	F O H	While Spare Replaces SOH	N/A	N/A	0	0	0	0
		From 2 or More Forced Outages	N/A	N/A	27.4	28.1	47	49.6
		Time to Start Spare GT	N/A	N/A	2.1	2.2	2.1	2.2
		Starting Unreliability Given F.O.	N/A	N/A	1.4	1.5	1.4	1.5
	Probability Spare is Replacing SOH		N/A	N/A	0	0	0	0
	λFO Events/GT Unit Yr.		10.5	10.9	10.5	10.9	10.5	10.9
	Starting Reliability		.93	.93	.93	.93	.93	.93
	BINOMIAL TERMS:	5 or 9	0	0	.833	.828	.719	.712
	PROBABILITY THAT n GT/HRSG's ARE NOT FORCED OUT; DISCRETE VALUES, NOT CUMULATIVE	4 or 8	.864 or .746	.860 or .740	.155	.159	.242	.246
		3 or 7	.129 or .223	.132 or .227	.012	.012	.036	.038
		2 or 6	.007 or .029	.008 or .031	.0004	.0005	.003	.004
		1 or 5	.0002 or .0022	.0002 or .0024	0	0	.0002	.0002
		0 or 4	0 or .0001	0 or .0001	0	0	0	0

Table 3.27

Analysis Details with SOH Reduced to Zero for Redundant Systems and Capacity Factor of 0.4 - (See Table 3.25 for Part B)

Part A

		NO REDUNDANCY		WITH GT/HRSG REDUNDANCY			
SUCCESS DEFINITION		4 OF 4 or 8 OF 8		4 OUT OF 5		8 OUT OF 9	
CF ASSUMPTION		DIST.	RESID.	DIST.	RESID.	DIST.	RESID.
		AVAIL./.4	AVAIL./.4	AVAIL./.4	AVAIL./.4	AVAIL./.4	AVAIL./.4
COMBINED CYCLE POWER PLANT	FOH Hrs/GT Unit Yr.	653	662	407	438	466	526
	SOH Hrs/GT Unit Yr.	481	668	210	210	210	210
	AVAIL. (FRACTION)	.871	.848	.930	.926	.923	.916
	r	.079	.082	.048	.051	.054	.062
	CR	.917/.87	.914/.868	.950/.920	.946/.916	.943/.909	.935/.899
	CAPITAL & DT NUMERATOR	9.12	9.46	9.92	10.26	9.52	9.86
	CAPITAL & DT TERM	11.43/26.21	12.20/27.25	11.24/26.96	11.71/28.00	10.94/26.18	11.51/27.42
	1.836 L&M	1.96	3.13	2.06	3.23	2.01	3.18
	CONSTANTS (FUEL, ETC.)	80.76	77.31	80.76	77.31	80.76	77.31
	PWR. COST Mills/kWh	94.15/108.93	92.64/107.69	94.06/109.78	92.25/108.54	93.72/108.94	92.00/107.91
GT & HRSG	FOH	316	325	70	101	129	189
	SOH	271	458	0	0	0	0
	FH/GT UNIT YR (CC) 4 or 8 GT Basis	7626/3504	7430/3504	8143/3504	8112/3504	8084/3504	8024/3504
	FH/GT UNIT YR (CC) 5 or 9 GT Basis	N/A	N/A	6514/2803	6490/2803	7186/3114	7132/3114
OTHER STEAM CYCLE	FOH	337	337	337	337	337	337
	SOH	210	210	210	210	210	210

Tables 3.25 and 3.27 Cont'd.

Analysis Details with SOH Reduced to Zero for Redundant Systems

Part B

			NO REDUNDANCY		WITH GT/HRSG REDUNDANCY			
SUCCESS DEFINITION			4 OF 4 or 8 OF 8		4 OUT OF 5		8 OUT OF 9	
			DIST.	RESID.	DIST.	RESID.	DIST.	RESID.
GT & HRSG (DETAILS)	F O H	While Spare Replaces SOH	N/A	N/A	39.1	68	78.3	136
		From 2 or More Forced Outages	N/A	N/A	27.4	28.1	47	49.6
		Time to Start Spare GT	N/A	N/A	2.1	2.2	2.1	2.2
		Starting Unreliability Given F.O.	N/A	N/A	1.4	1.5	1.4	1.5
	Probability Spare is Replacing SOH		N/A	N/A	.124	.209	.248	.418
	λFO Events/GT Unit Yr.		10.5	10.9	10.5	10.9	10.5	10.9
	Starting Reliability		.93	.93	.93	.93	.93	.93
	BINOMIAL TERMS:	5 or 9	0	0	.833	.828	.719	.712
	PROBABILITY THAT n GT/HRSG's ARE NOT FORCED OUT; DISCRETE VALUES, NOT CUMULATIVE	4 or 8	.864 or .746	.860 or .740	.155	.159	.242	.246
		3 or 7	.129 or .223	.132 or .227	.012	.012	.036	.038
		2 or 6	.007 or .029	.008 or .031	.0004	.0005	.003	.004
		1 or 5	.0002 or .0022	.0002 or .0024	0	0	.0002	.0002
		0 or 4	0 or .0001	0 or .0001	0	0	0	0

and it is assumed that SOH from the GT/HRSG is reduced to zero by the redundant GT/HRSG.

3.7.5 Simplified Fuel versus Reliability Cost Trade-off

As an alternate method of evaluation, it is possible to simplify the analyses considerably by trading off fuel cost differentials between the redundant GT/HRSG, and the make-up power costs against the chargeable increased capital cost of the redundant GT/HRSG. Qualitatively, the only additional component purchased is the HRSG. The simple-cycle gas turbine would have been added elsewhere for reserve power purposes in either case. When the gas turbine is run combined-cycle, however, it can not provide additional reserve power capability. At any point in time, it can provide either combined-cycle redundant power or simple-cycle reserve power, but not both. In addition, the gas turbine has downtime of its own during which it can not fulfill either function.

Figure 3.41 displays the results of a general analysis using this approach involving a range of parameters, namely:

- Make-up power fuel cost, $/MBtu
- Make-up power heat rate, Btu/kWh
- Fuel cost of redundant unit, $/MBtu
- Operating hours of redundant unit, hours.

The result is expressed as a net savings or loss in $/year. The curves shown represent the general relation of --

Net Savings (Loss) =	Cost of Make-up Power	-	Fuel Cost Redundant Limit	-	First Cost GT/HRSG

Estimates and descriptions of the necessary input parameters for this expression are given in Table 3.28.

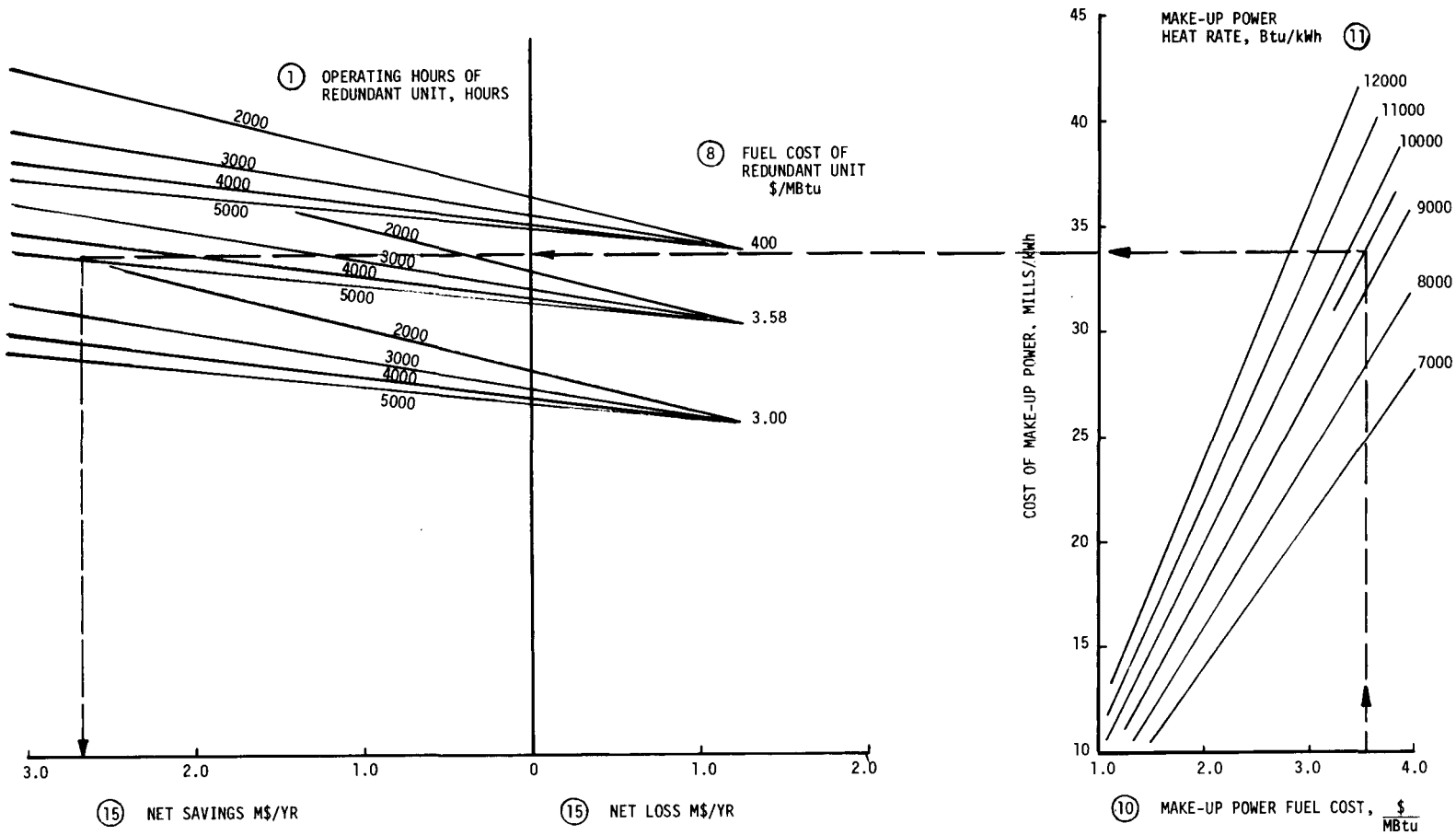

Figure 3.41: Cost/Value of Redundancy in Baseload Duty

Table 3.28

Definition of Parameters and Values

Base Load Operation - 8 out of 9 Redundancy - Residual Fuel

	Parameter	Unit	Value
1	Increased combined cycle operation	hours	Independent Variable on Figure 3.41
2	Chargeable fraction of GT capital cost	--	Dependent Variable
3	GT Capital cost	$	12,000,000
4	GT chargeable capital cost	$	Dependent Variable
5	HRSG Capital cost	$	6,000,000
6	Fixed Charge Rate	--	0.18
7	Increased Levelized Capital Cost	$/Yr	Dependent Variable
8	Combined Cycle Fuel Price	$/MBtu	Independent Variable on Figure 3.41
9	Combined Cycle Heat Rate	Btu/kWh	8235
10	Make-up Power Fuel Price	$/MBtu	Independent Variable on Figure 3.41
11	Make-up Power Heat Rate	Btu/kWh	Independent Variable on Figure 3.41
12	Fuel Cost Levelizing Factor	--	2.463
13	Rating	kW	99800
14	Reduced Levelized Fuel Cost	$/Yr	Dependent Variable
15	Net Saving (Loss)	$/Year	Variable as shown in Figure 3.41

Table 3.28 Continued

LINE ITEM DESCRIPTIONS

(1) The increased combined cycle gas turbine operation in fired hours per year is an independent variable in Figure 3.41.

(2) The fraction of the redundant gas turbine cost which is chargeable to the combined cycle system is:

$$(\text{Gas Turbine Downtime} + (1)) \div 8760 = (2)$$

(3) Capital cost of one gas turbine simple cycle installed @ $12,000,000.

(4) Gas turbine capital cost which is chargeable to the combined cycle system is:

$$(4) = (2) \times (3) = (2)\ (\$12,000,000)$$

(5) Capital cost of one heat recovery steam generator (HRSG) and the necessary water and steam piping to implement the redundancy at $6,000,000.

(6) Fixed charge rate set at 0.18.

(7) Increased levelized capital cost which is chargeable to the combined cycle system in order to implement the GT/HRSG redundancy is:

$$(7) = ((4) + (5))(6) = \left[(2)(12,000,000) + 6,000,000\right]\ (.18)$$

(8) Combined cycle fuel price in 1980 dollars is a variable in Figure 3.41. The range covered is from the EPRI Technical Assessment Guide.

(9) Average residual fuel combined cycle heat rate is set at 8235 Btu/kWh.

(10) Average make-up power fuel prices is a variable in Figure 3.41.

(11) Average make-up power heat rate is a variable in Figure 3.41.

Table 3.28 Continued

(12) Fuel cost levelizing factor to account for general inflation of 6% and real escalation at 2% is set at 2.463 from the EPRI Technical Assessment Guide.

(13) Rating of one gas turbine operating in combined cycle on residual fuel is set at 99800 kW.

(14) Reduced levelized fuel cost which is creditable if the GT/HRSG redundancy is implemented is:

$$(14) = ((10)(11) - (8)(9))\,(12)(13)(1)$$

$$(14) = ((10)(11) - (8)\ 8235)(2.463)(99800)\ (1)$$

(15) Net Savings (loss) = Reduction - Increases

$$(15) = (14) - (7)$$

$$(15) = \left(0.24\times10^{6}\ (10)(11) - 2024.2\times10^{6}\ (8)\right)(1) - (246.6(1) + 1.25\times10^{6})$$

shown in Figure 3.41.

The input values in the table are not equal in terms of importance and will vary from site to site. The most important variable is the average heat rate of the plants providing make-up power when the combined-cycle is down (line 11). The second most important variable is the actual increased combined-cycle operation which can be expected if the GT/HRSG redundancy is implemented (line 1). It should be noted that these two parameters are not independent. If the average make-up power heat rate is high, then the redundant combined-cycle power will be fully utilized, whereas, if the make-up heat rate is low, it will be minimally utilized. The question for specific situations, of course, is a function of time of day/week/season for each utility system; however, if the specific conditions are known, an average can be calculated. These curves allow a quick evaluation, although somewhat simplified, of the value and sensitivity of several parameters. For example, the intercept points between zero net savings and the fuel cost lines of the redundant unit are essentially the break-even values for the cost of make-up power. With the fuel cost of the redundant unit at 4.00 $/MBtu, the break-even cost of make-up power ranges from 35 mills/kWh to 36.5 mills/kWh for operation of the redundant unit from 5000 hours to 2000 hours. Other assumptions can be made or specific site conditons used to determine from the curves the potential savings or loss conditions.

For illustrative purposes, specific values are derived or assigned for the necessary input parameters and a net savings calculated. Table 3.29 shows the results of this example. These results are similar to those shown previously in which the power cost equation was used for the special case, when make-up and redundant fuel prices were the same. The savings shown in Table 3.29 of nominally $2.7M per year or ($2.7M/0.18FCR) = $15M here compare to the $24M for essentially the same case shown in Table 3.19 with the power cost equation.

Table 3.29

Example of Redundancy Trade-off

Base Load Operation - 8 out of 9 Redundancy - Residual Fuel

	Parameter	Unit	Value
1	Increased combined cycle operation	hours	4800
2	Chargeable fraction of GT capital cost	--	0.625
3	GT Capital cost	$	12,000,000
4	GT chargeable capital cost	$	7,500,000
5	HRSG Capital cost	$	6,000,000
6	Fixed Charge Rate	--	0.18
7	Increased Levelized Capital Cost	$/Yr	2,430,000
8	Combined Cycle Fuel Price	$/MBtu	3.58
9	Combined Cycle Heat Rate	Btu/kWh	8235
10	Make-up Power Fuel Price	$/MBtu	3.58
11	Make-up Power Heat Rate	Btu/kWh	9438
12	Fuel Cost Levelizing Factor	--	2.463
13	Rating	kW	99,800
14	Reduced Levelized Fuel Cost	$/Yr	5,081,417
15	Net Saving (Loss)	$/Year	2,651,417 Savings

Table 3.29 Continued

LINE ITEM DESCRIPTIONS

(1) The increased combined cycle gas turbine operation in fired hours per year for 8 out of 9 redundancy on residual fuel will have large variations. 4800 hours is an upper limit determined by the expected downtime for the 8 prime units.

(2) The fraction of the redundant gas turbine cost which is chargeable to the combined cycle system is:

(Gas Turbine Downtime + (1)) ÷ 8760 = (2)
(675 + 4800) ÷ 8760 = .625

(3) Capital cost of one gas turbine simple cycle installed @ $12,000,000.

(4) Gas turbine capital cost which is chargeable to the combined cycle system is:

(2) x (3) = .625 ($12,000,000) = $7,500,000

(5) Capital cost of one heat recovery steam generator (HRSG) and the necessary water and steam piping to implement the redundancy at $6,000,000.

(6) Fixed charge rate set at 0.18.

(7) Increased levelized capital cost which is chargeable to the combined cycle system in order to implement the GT/HRSG redundancy is:

(7) = ((4) + (5))(6) = [7,500,000 + 6,000,000] (.18)
(7) = $2,430,000/yr.

(8) Combined cycle fuel price in 1980 dollars is $3.58/MBtu. This value is from the EPRI Technical Assessment Guide.

(9) Average residual fuel combined cycle heat rate is set at 8235 Btu/kWh.

(10) Average make-up power fuel prices is $3.58/MBtu.

(11) Average make-up power heat rate is 9438 Btu/kWh, based upon power sources encompassing gas turbine combined cycle, old steam plants, simple cycle and purchasing power from other grids.

Table 3.29 Continued

(12) Fuel cost levelizing factor to account for general inflation of 6% and real escalation at 2% is set at 2.463 from the EPRI Technical Assessment Guide.

(13) Rating of one gas turbine operating in combined cycle on residual fuel is set at 99800 kW.

(14) Reduced levelized fuel cost which is creditable if the GT/HRSG redundancy is implemented is:

(14) = ((10)(11) - (8)(9)) (12)(13)(1)

(14) = $(3.58\times10^{-6}\times9438-3.58\times10^{-6}\times8235)(2.463)(99800)(4800)$ = $5,081,417/yr.

(15) Net Savings (loss) = Reduction - Increases

(15) = (14) - (7)

(15) = 5,081,417 - 2,430,000 = $2,651,417/yr. Savings in this example.

Blank

Task 4.0 - Recommended R & D Programs

4.0 Key Technologies Research And Development Programs

Throughout the performance of Tasks 2, 3 and 5, a careful assessments were made of the state of the art in each technology area relative to the baseload centerline design, subsequent modifications for peaking and mid range service and coal-derived fuel operation. The objective of Task 4.0 was to develop this assessment into an integrated set of research and technology requirements that will form the basis of the program plan for possible inclusion in the follow on phases.

The results of Task 1 and 2 show that the near term plant should be designed around an air-cooled gas turbine, firing at 1985°F (1085°C) and a 12.1 pressure ratio. This concept will, in reality, be a modified MS7001E Gas Turbine. The modifications defined in Task 3.0 are of three basic types. First, those introduced as product improvements to the utility product line; second, modifications that are normally offered to industrial users, (normally redundant and standby components); and third, hardware modifications to enhance reliability, maintainability and fuel flexibility.

The first two types of modifications are available on the present MS7001E. The third type requires some research and development.

Section 4.1 covers a description of the product reliability validation test and the other concurrent programs that will be needed to further increase the inherent reliability or allow the machine to be more fuel flexible (petroleum and coal fuels). Section 4.2 discusses manufacturing and process developments and in Section 4.3 proposed program inception dates and durations are presented.

4.1 Development Programs And Investigations

A. Product Reliability Validation

During the performance of Task 1 and 2, it was predicted that the current MS7001E gas turbine equipped with the latest design improvements

should exhibit an inherent plant equivalent availability of over 90 percent in a STAG 400 configuration. A reliability validation program is envisioned to demonstrate in the field the product reliability performance predicted. This would be jointly supported by EPRI, a host utility and the General Electric Co. The equipment at the host utility would be converted/modified, etc. as required in accordance with the reliability performance and determine maintenance and cost elements. It would be possible then to further refine the reliability model with respect to evaluating cost effective improvements.

This program could be structured to verify product reliability predictions for the new centerline design. As these product improvements are developed (see remainder of Task 4.0 recommendations), they could be selectively retrofitted and the predicted availability increase validated.

B. Canted Combustor

The design of the shortened and canted combustion chamber incorporating a multiple fuel nozzle head end, machined ring liner, and heavy wall positive curvature transition piece is based on current designs used in heavy duty and aircraft gas turbines. A combustion development program will be carried out in our combustion development laboratory using a full scale single burner test stand.

The combustion tests will be conducted at flows, temperatures, and pressures corresponding to those existing in the machine for the same operating condition. It is expected that the development program will include the following tests:

- Ignition
- Temperature pattern
- Liner pattern
- Emissions (smoke, NOx, CO, Co_2, O_2)
- Combustion driven pressure pulsations
- Flame emittance
- High-speed blow out
- Carbon buildup

It is also expected that the bulk of the testing will be done at a firing temperature of 1985°F (1085°C) although some short excursions may be made to a temperature as high as 2150°F (1177°C).

The machined-ring liner is expected to have a much longer life than the current brazed-ring liner when both are run at 1985°F (1085°C) firing temperature.

As a result of this extended life, the mechanism of failure wil be seal wear and wear of rubbing joints, and not low or high cycle fatigue or creep, as it is with the brazed ring liner. The multiple head end will reduce the level of combustion driven pressure pulsations, thus reducing mechanical wear but the probability is that mechanical wear will still be limiting. A research and development program will be necessary to develop long-wearing seals and joints. This may include such things as innovative design, coating rubbing surfaces with a wear-resistant material, such as tungston carbide, or eliminating the worst of the joints by welding. Since the combustor and transition pieces are much shorter than previous designs, this may be a sound approach. If they are welded together, an entirely new and different combustor mounting arrangement could be used.

C. Life Management

With the advent of microprocessors, it has become possible not only to increase control capability and reliability but also to integrate and predict future machine performance. Consequently, the operator can plan optimized scheduled outages, and during operation can interrogate devices in order to identify sensor status and operating condition before spurious trips occur. This is an effective means to optimize operation and performance.

Life Management goes beyond performance monitoring, condition monitoring or signature analysis. It incorporates predicting the life of a part as a function of operating temperature, cycles, and contaminant levels. This is accomplished by properly recording the operating history of selected parts during startup, shutdown and all operational modes involving temperature changes, time increments, cycles, and fuel and air

contaminant concentrations. This information, used in the proper algorithgm, can calculate the remaining useful life. When a predetermineo portion of the part life has been expended, maintenance is scheduled, the part is removed, selectively tested, refurbished and replaced. Historical and selected used-part test information is fed back to modify the algorithgm and design procedures, thereby providing for constant improvement in design procedures.

It is proposed that the life management system include no new instrumentation, except for the possibility of on-line analysis for contaminants in the fuel and air. There is already sufficient instrumentation on the machine for life management purposes.

The features of a life management system include the following:

- A mathematical model for predicting life to crack initiation and to failure including effects of corrosion.
- A three-dimensional finite element stress and heat transfer analysis procedure.
- Gas Turbine data acquisition, processor, and storage system.
- A procedure for part removal inspection and test to provide feedback for calibrating the empirical coefficients in the mathematical model.
- Procedures for repair and refurbishment of parts.

D. Non-Destructive Evaluation For High Reliability Overlay Coatings

Future Gas Turbine reliability will be directly related to overlay coatings integrity. As the need for higher metal operating temperatures increase, the use of less corrosion resistant materials is also likely to increase. High reliability overlay coatings offer the best prospect of meeting both the demands of high overall turbine reliability and high metal operating temperatures.

Overlay coatings offer the best method for tailoring bucket and nozzle surface compositions to resist the wide variety of hot corrosion environments which will inevitably occur over the next 10-15 years.

NDE technology for overlay coatings, thus will play a strong role in assuring fuel flexibility. It is, therefore, recommended that a study be conducted to identify potentially applicable techniques for the non-destructive evaluation of overlay coatings. Methods for the inspection of coating/substrate bond integrity, coating thickness distribution and coating defect size and location will be surveyed. Additional development needs would result from this study.

An effort would then be made to implement the application of the most promising existing NDE methods to bucket airfoil coatings, perhaps in conjunction with the impending EPRI/GTD claddings program. An in-depth effort would be conducted to establish the needed advances previously identified. This program would encompass the more conventional NDE technologies such as ultrasonics, eddy current and x-ray as well as emerging methods such as infrared scanning, magnetic permeability and x-ray fluorescence.

E. Thermal-Mechanical Fatigue

The objective of this program is to establish a failure criterion for thermal fatigue cycling as occurring in highly-cooled gas turbine buckets and nozzles. The approach would be to conduct controlled thermal-mechanical tests of candidate turbine alloys under potential cyclic conditions, and define from this the parameters of stress, strain, time and temperature which determine life. This program would make use of a new dual-loop thermal-mechanical fatigue test machine developed and debugged by General Electric, in which a simple cylindrical specimen can be programmed through the complex strain-temperature cycles which occur in actual hardware. In this way, the actual life or remaining life of turbine buckets and nozzles can be determined.

This new thermal fatigue failure criterion has several significant benefits for turbine users. Specifically it will -

1. enable conservatisms in life estimates to be removed with confidence, thus extending life,
2. provide the capability to evaluate life for the particular cycle conditions of a given user,
3. provide adequate reliability in the highly-cooled turbine parts required in future fuels.
4. enable evaluation of the impact of changes in fuel on hardware temperatures and cyclic life.

F. Effects Of Na & K in CDL Fuels

Both a knowledge of the behavior of current alloys and the development of improved materials through improved understanding of the mechanisms of corrosion are essential. The use of a wide varity of CDL fuels is also desired, and the relatively basic information referred to also is essential to evaluate this possibility. Further, an increase in knowledge of corrosion rates with fuels containing both Na & K is essential to the definition of maintenance intervals to be expected while burning CDL fuels. Thus, further insight into the behavior of hot-section component materials in the presence of both Na & K is needed. Also, understanding why both the alkali metals are more aggressive than $NaSO_4$ must be obtained. Accordingly, this program is broken into two parts.

a) Long-Duration Small Burner Screening Tests

Long-duration tests under deposition conditions in deposits of increasing K/Na ratios will be conducted. Materials for tests will include alloys and coatings such as IN-939, In-718, IN-738, MM-509, and RT-22 and selected plasma coating compositions.

b) Metallurgical and Deposition Analysis Activity

The chemistry and structure of the alloy scales and substrates will be studied by metallography, microprobe, X-ray diffraction and analytical chemistry techniques. This will be coupled with experiments to explore the thermochemistry of Na & K deposits, together with possible transport phenomena to account for the higher rate of sulfur intrusion into base metals.

G. Small, Heavy Cut CDL Fueled Dry Low NOx Combustor Tests

The current DOE/NASA-LRC RALFE program is testing a number of small scale dry low NOx combustor configurations on normal and heavy petroleum fuels and on a medium cut CDL. Phase 1 (small scale combustor) of the RALFE program will be completed at the end of 1980. It is proposed to start with the best RALFE small scale combustor design for medium cut CDL fuels, test it on heavy cut CDL, evaluate the design and, if necessary, modify the design for heavy cut CDL operation.

H. Full Scale Dry Low NOx Combustor For Heavy CDL Fuels

Following the small scale combustor development of the previous program (G), a full scale combustor design will be developed, built and tested on a heavy cut CDL. The result is a set of full scale machine grade hardware capable of operation on heavy cut CDL's. The program could include machine qualification of the hardware in subsequent phases.

I. Full Scale Low Btu Gas Combustor Development

The Powerton Program, prior to its cancellation, demonstrated successful low Btu gas combustion in a medium size (MS5000), moderate firing temperature (1730°F) (943°C) gas turbine combustor. A unique combustor aerodynamic design which, it is believed, can be applied to large (MS7000) size gas turbines at firing temperatures of 1985°F (1085°C) This proposed development program would involve developing the aerodynamic design of an MS7000 size combustor for 1985°F (1085°C) firing temperatures by means of scale up design and a series of development tests to arrive at the necessary modifications.

J. Dry, Low NOx Intermediate Btu Gas Combustor

Intermediate Btu gas produced in an oxygen blown gasification plant is an attractive fuel for gas turbines. However, the flame temperature is comparable to that of distillate oils, resulting in locally high temperature zones in the flame which will cause thermal NO formation. On a near-term basis, this problem can be met by steam injection at the expense of lowered steam turbine output, higher net plant heat rate, and

additional power plant complexity. A more permanent solution is to develop a dry, low NOx combustor specifically designed for intermediate-Btu coal gases. The preferred approach for such a dry low NOx design will be strongly dependent on the ammonia level in the fuel gas. If NH_3 content is low, a lean premixed combustor would be chosen. Since such a design does tend to aggravate conversion of fuel bound nitrogen (NH_3) into NOx, it becomes less attractive for fuels containing appreciable ammonia content. In that event, a rich-lean combustor would be favored.

K. Exhaust Gas Catalytic De-NOx Program

Catalytic denitrification of exhaust gases offers major advantages as a NOx suppression system when burning heavy cut CDL's. However, there is no experience with CDL's of any kind in such a system, and therefore a number of questions need to be answered before recommending such a system. The effect of CDL contaminants on catalyst effectiveness and life is unknown, and will be investigated. Also to be investigated is the possible formation of potentially corrosive by-products in the combustion and denitrification processes, their effects on the catalyst and the heat transfer surfaces of the HRSG. The method to be used in the program utilizes a scaled, single gas turbine combustor to simulate appropriate exhaust gas constituents, and small scale catalyst sections and heat transfer surfaces to simulate NOx removal and by product formation. Use of small scale equipment not only reduces costs, but also permits earlier implementation of the program while CDL's are still available only in limited quantities.

L. Handling and Treatment of CDL Fuels

This program's objective is to evaluate the characteristics of CDL fuels from a handling standpoint, and develop effective methods for treatment and delivering of these fuels to the gas turbine combustion chambers. The approach is threefold.

First, using production samples of CDL fuel, work with technical experts to develop hardware and procedures necessary to remove contaminants from CDL fuels which would be detrimental to the gas turbine.

Second, build and operate a special test loop to determine the effects of CDL fuels on components of the fuel system including filtration equipment, pumps, flow dividers and flow metering devices.

Third, a study will be made of the compatibility of CDL fuels with appropriate metals and elastomers, and with other fuels expected to be used in gas turbines.

M. Coal Ash Deposits with CDL Fuels

The objectives of this program are to determine the ash deposit rates as a function of fuel contaminants and temperature, to establish the role of the contaminants, and examine methods for removal of the deposits. The technical approach is to perform turbine simulator tests at design pressures, temperatures and velocities, using doped #2 distillate or CDL fuel, if available. The turbine simulator will have air-cooled surfaces and will have a means of studing hole location, plugging and ash deposition rates. Analysis of the ash deposit chemistry on the airfoil surfaces will be performed. The response of the accumulated ash deposits to water wash and abrasive cleaning will be studied, and on-line washability and abrasive cleaning tests performed.

N. Control Interaction Study of Integrated Coal Gasification Combined Cycle Plants

The objective of this study is to identify those interactions between major components of the plant which will determine the plant control strategy, to define the information needed for evaluating the control strategy, and selection of the control parameters to implement the strategy.

The analysis tool will be a mathematical model of the fuels plant and gas turbine. The study would look into system time constants, stability, control parameters, instrumentation requirements, and load transient capability.

Definition of the gasification and cleanup hardware is a required program input. The sensitivity and scope of the program is dependent upon

the availability of the plant component performance data, including off-design point operation.

P. Petroleum-Base Residual Fuels

The performance of a fuels flexible high reliability gas turbine can be measured with a test program demonstrating operation with petroleum-based residual fuels in a power plant environment. To establish base-line criteria; operational performance and maintenance cost data would be collected. This would establish frequency and duration of downtime for cleaning/washing, filter changeouts and other related activities associated with plant reliability and economic tradeoffs.

Near-term testing and demonstration efforts would involve utilization of a dedicated factory power plant site to isolate the effects of firing temperature, fuel, inhibitor and running mode variations. This would be followed by a utility site test demonstrating the performance in a field environment. This field test would allow correlating the operation and maintenance cost data generated in the factory power plant testing with actual operating data.

It is proposed that a matrix of nine tests, each of about 200 hours duration, be conducted on the GE MS6000 Prototype Power Plant to evaluate the variables associated with firing temperatures (1850°F to 2085°F) (1010-1141°C), water soluble and suspension inhibitors (MgO and Mg $(OH)_2$), cleaning methods and nozzle design variations. These tests can be completed in approximately 1 1/2 years and the results would then be compared to existing MS7000 heavy fuel field data at 1850°F (1010°C) firing temperature. Long term field testing (1000 hrs/run) can concurrently be conducted on MS7000 field units at firing temperatures up to 1950°F (1066°C) to demonstrate the validity of the factory test results. It is likely that these utility site tests will require more time to set up and conduct depending on equipment available at the site selected. It is expected that they could be completed approximately one year after the factory power plant tests are conducted.

4.2 Manufacturing and Process Developments

The Task 3 high reliability combined-cycle concept is essentially designed around the mature MS7001E gas turbine. As such, the manufacturing and process needs are not only development but are an integral part of a heavy duty production line. However, the new canted combustor concept utilizes a machined-ring liner that may require some manufacturing development.

The machined-ring liner, if manufactured in short welded sections, will not need manufacturing and process development. An alternate approach for fabrication of the liner is to construct it in one piece. However, the one-piece construction does have some inherent manufacturing problems that may require some significant process developments. Accordingly, the fabrication by short welded sections is the preferred approach initially.

4.3 Summary Program Plans

	PROGRAM	PROPOSED INCEPTION	DURATION YEARS
A.	PRODUCT RELIABILITY VALIDATION	1980	3
B.	CANTED COMBUSTOR	1981	3 1/2
C.	LIFE MANAGEMENT	1980	1 1/2
D.	NDE FOR HIGH RELIABILITY OVERLAY COATINGS	1980	2-2 1/2
E.	THERMAL-MECHANICAL FATIGUE	1980	3
F.	EFFECTS OF Na AND K IN CDL FUELS	1980/81	3-4
G.	HEAVY CUT CDL ON BEST RALFE COMBUSTOR	1981	1
H.	DEVELOP, BUILD AND TEST COMMERCIAL HEAVY CUT CDL COMBUSTOR	1981/82	2
I.	DEVELOP LOW Btu COMBUSTOR	1980/81	2
J.	DEVELOP DRY LOW NOx COMBUSTOR FOR INTERMEDIATE Btu GAS	1981/82	3
K.	DEVELOP EXHAUST GAS CATALYTIC DE-NOx	1982	2-3
L.	HANDLING AND TREATMENT OF CDL FUELS	1980/81	3
M.	COAL ASH DEPOSITS WITH LIQUID FUEL	1980/81	3

N.	PLANT CONTROL DEVELOPMENT FOR LOW Btu COAL GAS	1980/81	2-3
P.	PETROLEUM BASED RESIDUAL FUELS:		
	1. FACTORY POWER PLANT	1980/81	1-2
	2. UTILITY SITE	1980/81	2

Task 5.0 - Modifications For Peak And Mid-Range Duty And Coal Derived Fuels

5.1 Modifications for Peak And Mid-Range Duty

1. Petroleum Fuel Effects

The conversion of a gas turbine baseload plant as defined in this program to peaking on mid-range duty burning distillate fuel does not require any reliability changes. There would be, however, a cost effect other than direct fuel costs associated with residual fuel operation. This is primarily due to the need for maintenance outage for turbine washing, cleaning and nutshelling. In baseload duty, any cleaning of the combustor, fuel nozzle or turbine section of deposits, requires a planned outage. This power outage must be replaced by expensive reserve power. As soon as the machine is operated in mid-range or peaking duty, then these cleaning cycles can be planned for those periods of time in which the generating plant is not needed or system demand is low or in reserve. This considerably reduces downtime costs. Further cost reductions can be achieved by removing the redundancy requirement in the fuel forwarding system. This redundancy is only necessary for baseload duty operation.

2. Hardware Effects

When making the transition from baseload to peaking, the startup and shutdown duty cycle on components would increase; however, the operating time duty cycle would decrease. Although the exact relationship is not fully understood, it is expected to have an effect similar to that which was used in Task 1 to translate peaking service failure rates to baseload service failure rates. For components such as inlet filters and lube oil filters the expected failure rate would be reduced by the ratio of the fired hours. For other components such as the exhaust system components, the main lube oil pump, and the atomizing air compressor, the expected failure rates would be reduced by the second root of the ratio of the fired hours. For components which operate whenever the unit is started up, the expected failure rates would be increased by the ratio of the fired starts. None of the design changes included for the

new centerline design would have to be revised for a unit in peaking service. Sufficient margin in low-cycle fatigue life is included in flange-to-flange components to allow for variation in duty cycle. Controls offer no barriers to duty cycle. The major problem will be found in the steam side hardware and operation.

Steam Equipment

The steam-cycle equipment is designed to operate in either mid-range or baseload duty. The design features that enable the system to be started and stopped on a daily basis for mid-range duty do not compromise the performance or reliability of the baseload plant.

There are, however, some significant differences between mid-range and peaking operation that preclude the combined-cycle from consideration for his application.

Mid-range duty is typically characterized by one start per day for five days a week with typically 12-18 hours per day of operation, and a total annual operation of approximately 4,000 hrs. per year. This means that the steam cycle equipment is required to make five "warm" or "hot" starts each week and usually only one cold start on Monday morning after a weekend shutdown.

In peaking duty there is typically one or two starts per day, five days a week but usually only five hours a day operation and only 1000 hours per year.

The relatively short operating time in peaking service results in two effects on a combined-cycle:

a) It makes the combined-cycle economically unattractive since the reduced operating costs (fuel and O&M) are insufficient to offset the higher capital costs - relative to a single cycle gas turbine. It is a fundamental requirement that generating equipment intended for low annual operating hours; i.e. peaking duty, have a low capital cost since, for this duty, the first cost portion of the total power cost is of the same order of magnitude as the fuel cost.

b) The short hours of daily operation result in longer shutdown periods and consequently each start of the steam-cycle equipment is essentially a cold start. Since "cold" starts of the HRSG and steam turbine require extended times - up to 200 minutes - the steam turbine equipment would typically hardly get to full load before it was time to shut down again. This is clearly an unacceptable situation and it is apparent that combined-cycle plants are not suitable for economic peaking operation.

Flange-to-Flange

It is expected that no modifications will be needed to convert the baseload machine to either mid-range or peaking duty. When running on distillate fuel, residual fuel or coal-derived liquids, the combustor life is expected to be limited by mechanical wear which is not expected to be firing temperature sensitive until the firing temperature reaches 2100°F (1149°C) or above on residual or CDL's, or 2250°F (1232°C) on clean distillate. At the above mentioned temperatures, the respective liner lives are expected to be 14,000 hours. Also, wear is not expected to be affected by the number of starts.

Accessories

As the duty cycle changes to peaking service, there will be a sizeable reduction in the number of fired hours which may render some of the proposed changes more costly on a mills/kW basis. Assuming a constant power cost factor, the "time to payback" figure shown in Table 5.1 could be multiplied by approximately four to determine the cost effectiveness of these changes.

Transitioning from baseload to mid-range is somewhat equivalent to going halfway to peaking service. The same comments made for peaking service apply to mid-range except the cost effectiveness multiplier would be about two instead of four. The design changes conceived for a new more reliable centerline machine in baseload service would improve reliability for a machine in any service. However, the utility must decide how much it is willing to spend to purchase higher reliability.

Table 5.1

Accessories Baseload Options
(1980 $)

CHANGE	COST	RELIABILITY CHANGE	TIME TO PAY BACK
HYDROGEN COOLED GENERATOR	$400,000	50% IMPROVEMENT	*6 YR.
FULL SIZE AC AUX. LUBE OIL PUMP	3,400	40% IMPROVEMENT	1 YR.
DUAL LUBE OIL HEAT EXCHANGERS	18,700	90% IMPROVEMENT	25.5 YR.
DUAL LUBE AND HYDRAULIC FILTERS	10,600	90% IMPROVEMENT	4 YR.
DUAL FUEL FILTERS	7,500	90% IMPROVEMENT	2 YR.
REDUNDANT FUEL FORWARDING SKID (DUAL PUMPS, ETC.)	30,000	90% IMPROVEMENT	12-16 YR.

*INCREASED EFFICIENCY BENEFIT INCLUDED

Controls

In developing reliability numbers for a system with as large a number of components as are part of the gas turbine controls, it becomes evident that the aggregate of all the component failure rates can approach a large number relative to the individual component values. Application of redundancy, fault tolerance and repair while running can be increased, regardless of the current levels, until its application results in complexity levels which cause reliability to decrease.

Where user requirements might call for high reliability for long periods of continuous operation, control and protection system would be configured in response to that requirement. For example, the lube oil pressure switch could be duplicated, the logic configured to trip only if two of the three pressure switches indicated low lube oil pressure, (63QA, 63QA-1 and 63QA-2), and bleed and block valves provided to permit testing and replacement of the switches while the turbine is running. The ORAP data analyzed for this program indicates that there were no forced outages, four failures to start and nine scheduled outages in the 1217280 period hours of operation for all switches (excluding limit switches). The user must evaluate the value of the redundancy and maintain the system to insure continued equivalent running reliability.

Any control design put in place specifically for running reliability will not deter from the running performance of a turbine used in a peak/mid-range application. It will, however, include hardware which may be considered unnecessary, adding cost and complexity. For example, the 95 percent continuous running reliability for 100 hours of operation is statistically achieved with a failure rate 90 times greater than that required for a continuous running period of 9000 hours. Hence, with proper maintenance, a peak or mid-range operation application can statistically achieve higher running reliability than a continuous operation application with a much lower component failure rate statistic.

5.2 Modifications to Baseload Plant for Coal-Derived Fuels

The Fuel Use Act mandates that new gas turbine installations intended to operate more than 1500 hours per year must be capable of conversion to

alternate, non-petroleum fuels within five years (with extensions possible in certain circumstances). High Reliability Gas Turbine Combined Cycle (HRGTCC) Power Plants, by nature of their base and mid-range loading, must meet this requirement. Due to its abundance in the U.S., coal is the most logical feedstock for such alternate fuels, and the impact of future conversion to coal-derived fuels (CDF's) must be factored into any HRGTCC design. This section of the report addresses characteristics of the coal-derived fuels, their effect on the gas turbine and plant equipment, and continues with expected design modifications and the impact of performance for a number of coal-derived fuels. These fuels are representative of the expected range of future gases and liquids from coal.

5.2.1 Coal-Derived Fuel Characteristics

1. Coal-Derived Liquids (CDL's)

Although viable processes exist for producing liquid fuels from coal gas, the processes that have emerged in the U.S. as prime contenders in recent years utilize direct liquefaction of pulverized coal by reaction with hydrogen under pressure. Three of these contemporary coal liquefaction processes--H Coal, DRC-II, and Exxon Donor Solvent (EDS)--are at, or near, the point of producing CDL's in quantities permitting serious evaluation. Reported results from these processes (References 1 thru 10) provide the data base for the discussion of CDL's that follows.

Fundamentally, in coal liquefaction processes, pulverized coal, flowing in a solvent slurry, is heated and pumped into a pressurized reactor vessel together with a supply of hydrogen. The initial heat and pressure trigger a complex of chemical reactions that generate more heat and pressure and evolve a range of liquid (and some gaseous) products. This process is facilitated by the use of chemical catalysts in the H-Coal and EDS systems. Subsequent treatment of the process outflow (filtration, solvent precipitation, distillation and a subsequent hydrogenation step) yields a mix of different fuels and by products, the latter including some hydrogen and all the solvent that is recycled to the reactor with a continuing flow of new coal.

The SRC-II, H-Coal and EDS processes produce about 2.5-3.0 barrels of liquid fuel per ton of coal (2.3-2.72 barrels of liquid fuel per tonne of coal), and their reaction times, pressure, and temperature lie in a fairly narrow range: 15-60 minutes, 2000-3000 psi (13.79-20.69 MPa), and 750-860°F (399-460°C).

The pilot plant status of these processes is indicated in Table 5.2. The earliest dates for commercial-sized plants (6000 to 20,000 tons per day) (5.44 to 18.14 Ktonnes per day) are projected to be 1983 for the SRC-II process, and 1985-1987 for the H-Coal and EDS processes.

Each process can produce a range of liquid products. Under consideration at this time by the process developers are a series of distillates:

1. Light Distillate - a naphtha boiling range material most likely destined for motor fuel and/or chemical process feedstock.
2. Medium Distillate - an atmospheric distillate similar to #2 petroleum distillate in its boiling range. Potential applications include transportation fuels, heating fuel, and gas turbine peaking fuel. Upgrading or refining is required for some of these applications.
3. Heavy Distillate - a vacuum distillate. This is identified by some fuel producers as a potential "combined cycle fuel". However, it is highest in fuel-bound nitrogen and hardest to denitrogenate. It may or may not contain significant trace metals depending on processing techniques and equipment.

Originally, it was also planned to use the vacuum still bottoms in a low quality "boiler fuel". The current trend is to gasify these still bottoms to produce all or part of the hydrogen required in the liquefaction process.

Of the three distillates listed above, the medium cut and the heavy cut are considered potential gas turbine fuels. The light cut has higher value elsewhere.

The survey of the key properties of various distillate products made by the three processes is summarized by Figure 5.1. For the medium distil-

Table 5.2

Coal Derived Liquid (CDL) Processes

PROCESS	DEVELOPER	PILOT PLANT SIZE & STATUS
• H-COAL	HYDRO-CARBON RESEARCH	600 TPD; '80 STARTUP @ CATTLETTSBURG, KY.
• SRC-2	GULF MINERAL RESOURCES	50 TPD SRC PDU NOW OPERATING @ FT. LEWIS, WASH. 6000 TPD DEMO PLANT PLANNED NEAR MORGANTOWN, W. VA.
• DONOR SOLVENT PROCESS	EXXON	250 TPD; '80 STARTUP

late product (#2 equivalent), studies have been reported on upgrading by catalytic hydrogenation over a range of severity (i.e., the quantity of hydrogen) levels. Due to practical considerations (i.e., the cost adder for hydrogenation), only the primary raw products and "mildly upgraded" products were considered as viable gas turbine fuels as shown by the open and cross-hatched bars, respectively. From Figure 5.1, the following is shown:

1. The nitrogen content in the light and medium distillates depends on the process. Characteristically, the Donor Solvent Process gave the lowest nitrogen and the SRC-II the highest.
2. Hydrogen and sulfur contents in the light distillate grade show similar trends, but in the medium grade, there are no pronounced differences due to process type.
3. In the heavy distillate grade, the differences due to process type nearly disappear. This is not unexpected, since the different catalytic conditions would have more effect on the lower boiling materials than on the higher boiling materials.

Based on the data summarized in Figure 5.1 plus other data accumulated and reviewed, a set of projected properties was derived for the two potential gas turbine fuels, as delineated on Table 5.3. Most properties are presented in terms of a range, due not only to differences between processes but also differences in coal feedstocks and uncertainty attributable to the early stage of product development.

The EDS and H-Coal properties are based on a small number of development scale samples which may not be representative of future pilot plant or commercial plant products, especially in the trace metal contaminant content. On the other hand, the SRC-II data is based on product from a larger, 50 ton/day (45.4 tonne/day) pilot plant that has been in operation for some time. A 5000 barrel batch of SRC-II product was made and tested in boilers at Consolidated Edison. Table 5.4 shows the actual average properties of SRC-II liquid fuels made in the Ft. Lewis pilot plant under conditions simulating commercial operation as closely as possible.

In addition to the foregoing fuel properties which are currently specified for petroleum based fuels, there are additional key properties of

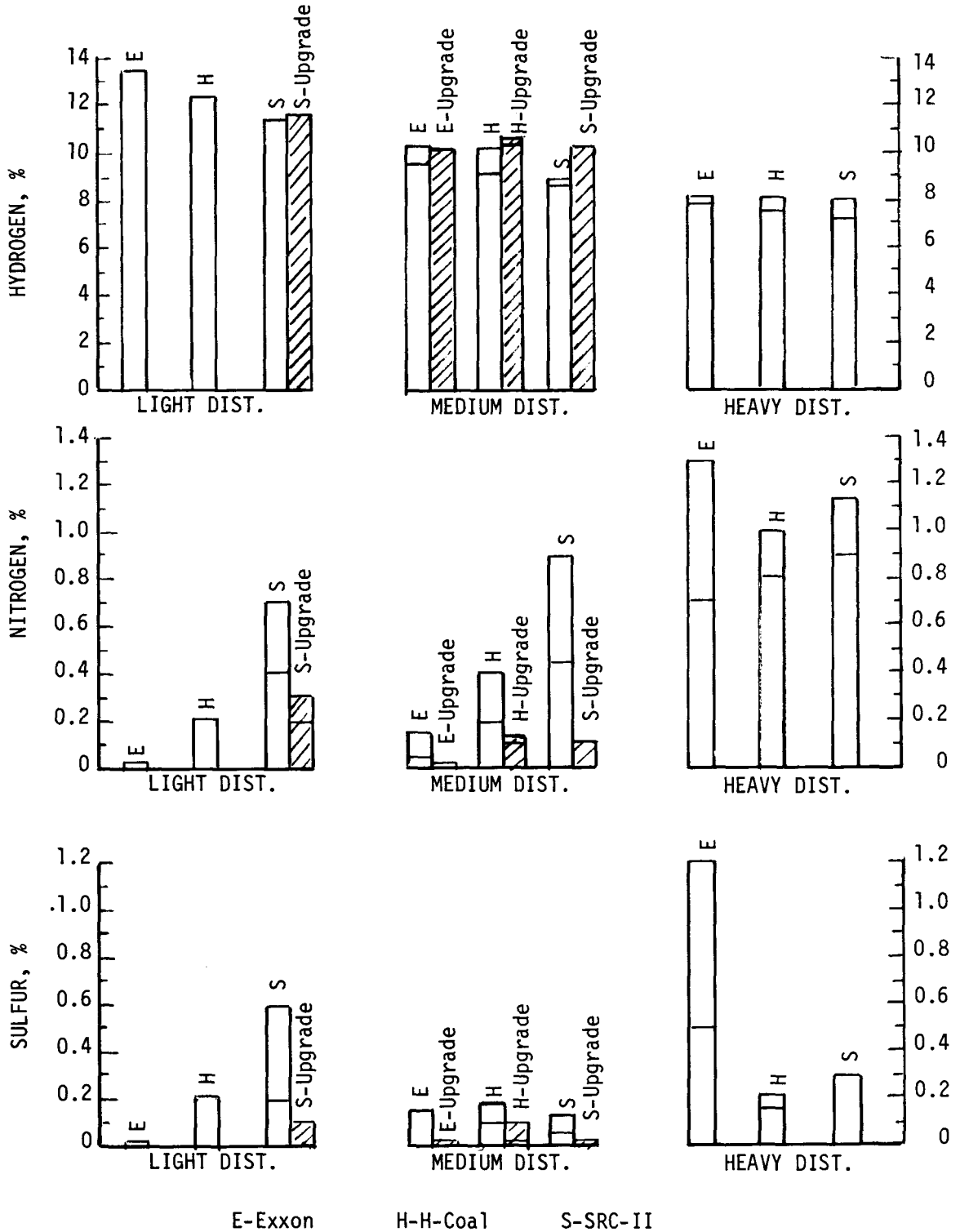

Figure 5.1: Composition Coal Liquid Distillates

Table 5.3

Coal-Derived Distillate Fuels
Projected Properties of Typical Products

	Coal-Derived Medium Cut	Petroleum No. 2 Fuel*
Distillation Range, °F (°C)	350-650 (177-343)	350-650 (177-343)
Specific Gravity, 60°F (16°C)	0.95-0.98	0.83-0.88
Viscosity, 100°F, cSt (38°C)(mm^2/sec)	2-6	1.4-2.2
High Heating Value, Btu/lb	17,500-18,500	19,000-19,600
(Btu/kg)	(38,600-40,800)	(41,900-43,200)
Composition		
Hydrogen, wt%	9-11	12.2-13.2
Nitrogen, wt%	0.1-0.8	0.005-0.050
Sulfur, wt%	0.1-0.2	0.10-0.25
Ash, ppmw	10-100**	2-50
Alkali Metals, ppmw	≤1	1 max
Vanadium, ppmw	<0.1	<0.1

	Coal-Derived Heavy Cut	Petroleum Heavy Dist.*
Distillation Range, °F (°C)	650-1000 (343-537)	650-950 (343-510)
Specific Gravity, 60°F (16°C)	1.01-1.06	0.85-0.88
Viscosity, 100°F, cSt (38°C)(mm^2/sec)	6-90	6-60
High Heating Value, Btu/lb	17,000-17,500	19,000-19,500
(Btu/kg)	(37,500-38,600)	(41,900-43,000)
Composition		
Hydrogen, wt%	7.5-9	12.4-13.0
Nitrogen, wt%	0.4-1.1	0.08-0.13
Sulfur, wt%	0.1-0.4	0.2-1.0
Ash, ppmw	100-300	2-50
Alkali Metals, ppmw	1-8***	1 max
Vanadium, ppmw	<0.1	≤0.5

* Included for comparison
** Ash comprises largely silicon, aluminum, iron & calcium
*** Alkali metals approximately 1/2 Na, 1/2 K in CDL's

Table 5.4

Projected Properties of Commercial
SRC-II Coal Liquid Distillate Fuels

	Middle Distillate 350-550°F (177-288°C) Boiling Range	Heavy Distillate 550-950°F (288-510°C) Boiling Range
HYDROGEN, WT %	9	7.5
NITROGEN, WT %	0.8	1.1
SULFUR, WT %	0.25	0.40
ASH, ppmw	25	100
VANADIUM, ppmw	0.1	0.1
Na + K, ppmw	1	1
HIGH HEATING VALUE, Btu/lb (Btu/kg)	17,500 (38,588)	17,000 (37,485)
SPECIFIC GRAVITY, 60° (16°C)	0.99	1.05
KINEMATIC VISCOSITY, 100°F, cSt (38°C, mm^2/sec)	4	50

coal-derived liquids which are critical to their performance as gas turbine fuels:

- Aromaticity - The CDL fuels are highly aromatic, and, in the heavier grades, tend to have high specific gravities. The same fuels may also have poor water rejection due to the presence of natural emulsifying agents. Together, these two properties tend to preclude, or limit, the use of gravity settling of a dispersed salt water phase and of water washing to remove salt water, salts and wettable solids.

  Aromaticity also has a great influence on the combustion process (smoke) and flame radiation.

- Trace Elements - These can be different both in chemical species and concentration levels than those in petroleum fuels for which existing treatment technology and equipment exists. The levels of trace metals which can cause hot corrosion in the turbine may be less than in equivalent petroleum fuels, but the removal may be more difficult. Alkali metal contamination in petroleum fuels is essentially a sodium problem--readily controlled by water washing. In coal liquids, potassium may be equal to sodium and largely present as a complex silicate rather than the chloride or sulfate.

- Ash-Forming Contaminants - Some mineral components of the parent coal can be carried over in the CDLs. Even distillates, especially heavy distillates, may contain ash-forming elements at levels which could degrade the performance of today's gas turbines. The main elements present are Si, Al, and Fe.

- Fuel Compatibility - Heavy coal liquid fuels may not be compatible with petroleum fuels or even with lighter grades of coal liquid fuels.

In summary, a number of potential problem areas exist with CDL fuels, as summarized in Table 5.5. Their effects on the gas turbine and plant hardware and remedial action are discussed in a later section.

Table 5.5

Coal Derived Liquids
Problem Areas

CHARACTERISTICS OF CONCERN	CLEAN NO. 2 OIL (CASES)	MED. CUT CDL	HEAVY CUT CDL	PROBLEM AREAS
FUEL BOUND NITROGEN	LOW	HIGH	HIGHER	ENVIRONMENTAL
AROMATICITY, C/H RATIO	LOW	HIGH	HIGHER	LUMINOUS FLAME, SMOKE, ELASTOMERS
ALKALI METAL CONTENT	LOW (Na >> K)	HIGH (Na≃ K)	HIGH (Na≃ K)	CORROSION
SP. GRAVITY	LOW	HIGH	HIGH	PRECLUDES OR LIMITS GRAVITY SETTLING METHODS
WATER REJECTION	GOOD	POOR	POOR	
ASH	LOW	HIGH	HIGH	EROSION/DEPOSITION
VISCOSITY	LOW	HIGH	HIGH	PUMPING AND ATOMIZATION
COMPATIBILITY	--	MAY BE OK WITH NO. 2 DIST.	PROBABLY NOT OK WITH PETROLEUM LIQS. MAY BE NOT WITH MED. CUT CDL's	STORAGE, FUEL HANDLING

2. Coal-Derived Gases (CDG's)

A large number of processes for gasifying coal exist in various degrees of development, including several that are carryovers from the days preceding wide availability of natural gas in the U.S. For purposes of this study, processes aimed primarily at production of high Btu gas (or Synthetic Natural Gas) were not considered, since it is believed these gases would be pre-empted by other markets. Gases expected to be available to the electric utility market fall into the low and medium Btu heating value range (400 Btu/SCF (14.13 kBtu/m^3) and below).

The processes can be categorized in a number of ways, including air-blown vs. oxygen-blown, fixed-bed vs. fluidized-bed vs. entrained-flow, or simply low Btu vs. medium Btu product gas. In general, the air-blown gasification systems produce a low Btu (90-170 Btu/scf LHV) (3.2-6 kBtu/m^3 LHV) product gas. Economics dictate that the air-blown gasifier be closely integrated on site with the gas turbine combined-cycle plant, using gas turbine compressor extraction air in the gasifier and involving major interactions between the power plant and gas plant steam systems. The oxygen blown gasifier produces a medium Btu (200-350 Btu/scf LHV) (7-12 kBtu/m^3 LHV) gas. In some cases, integration of the gas turbine power plant with the gas plant can be justified economically, and, in others, a free-standing, remote gas plant is more effective. The latter case, where the gas is sold "over the fence" to the power plant by an outside supplier, is the simplest of the gas-fueled alternatives in terms of required gas turbine combined-cycle power plant modifications.

Due to availability of data, the study has concentrated on the fixed bed and entrained flow types of gasifiers. By far the greatest amount of post World War II coal gasifier experience has been with oxygen blown, non-slagging, fixed bed gasifiers of Lurgi design. More recent applications of fixed bed technology include the air-blown Lurgi gasifiers at STEAG's Lunen Power Station (West Germany), the British Gas Corporation's oxygen-blown slagging gasifier at Westfield, Scotland, and the GEGAS and DOE-MERC air-blown fixed bed gasifiers in the U.S. The fixed bed gasifiers, as a group, produce a gas at temperatures ranging from 800°F (427°C) to 1200°F (649°C) at the gasifier exit, and at a pressure

level sufficient to overcome the gas cleanup and distribution system pressure drops between the gasifier and gas turbine. Due to the moderate temperature levels, many coal tar, oil and naphtha vapors as well as phenols, ammonia and sulfur compounds are present in the gas. The hazardous or unwanted components are removed from the crude gas in separate cleanup steps. In many cases, the cleanup system removes the sensible heat of the raw gas by re-injecting heated quench water/liquor into the clean gas. This last step improves process efficiency and increases gas turbine output by increasing turbine mass flow. However, the resulting high water content of the fuel gas is a factor to be considered in gas turbine combustor design. Also, due to lower operating temperatures, the fixed bed gasifier has less high level heat available for steam generation in the gas plant and is usually a net consumer of steam from the power plant.

The entrained-flow gasifier, on the other hand, operates at a higher temperature level, 1800°F (982°C) to 2500°F (1371°C) gasifier exit temperatures being typical. Tars and oils are not produced due to the high reaction temperature. The raw gas contains a large amount of high level sensible heat which is usually recovered by some form of steam generation. The entrained-flow gasification system is usually a net producer of steam as a result.

The oxygen-blown Koppers-Totzek coal gasifier has been in service in a number of world-wide applications since World War II, usually to produce medium Btu gas at low pressure as a feedstock for chemical processes. More recently, new entrained-flow coal gasifiers have been under development at Shell Oil, Texaco, and Foster Wheeler. The Shell and Texaco processes are derived from refinery applications where they were used to gasify petroleum still bottoms.

Of the above alternatives, four gases can be selected that demonstrate the range of impact on the power plant design:

1. Fixed Bed, Integrated, Air Blown
2. Entrained Flow, Integrated, Air Blown
3. Entrained Flow, Integrated Oxygen Blown
4. Free Standing (Over the Fence) Entrained Flow Oxygen Blown

Typical product compositions for these four processes are compared to natural gas in Table 5.6. The properties shown are based on an Illinois No. 6 coal feedstock and are expected to vary with other coals. However, comparison between processes remains valid. Also to be noted is that all four of the coal-derived gas compositions are based on a Selexol gas cleanup system tuned to remove sulfur compounds from each gas to a level sufficient to meet environmental requirements. Fuel bound nitrogen in the form of ammonia will convert almost completely to NOx. To meet environmental regulations, the ammonia is tripped from the gas to acceptable levels by an ammonia scrubber. The molecular nitrogen present in large quantities in the air-blown gases is a stable form and inhibits thermal NOx generation by its quenching action. This shows up in the stoichiometric flame temperatures of the air-blown gases which are about 1000°F (538°C) lower than the natural gas and oxygen-blown gas cases. As a result, thermal NOx exhaust emissions from a gas turbine burning air blown low Btu coal gas are expected to be 10 to 15 percent of that of a natural gas fueled machine. On the other hand, the high hydrogen and carbon monoxide content in the free standing oxygen-blown case result in a higher flame temperature than natural gas and thermal NOx emissions will be 30 to 35 percent higher if no corrective action is taken. Also, the high H_2 and CO content results in much wider flammability limits for the oxygen-blown gases, which improves combustion but calls for still closer scrutiny of safety requirements.

The trace metal content of the coal-derived gases in Table 5.6 is undefined since significant trace metal data on clean fuel gas is nonexistent. In order to avoid hot corrosion, General Electric Company specifies maximum trace metal contaminant levels in the combustion products. These limits are a total of .024 ppmv of Sodium plus Potassium, .01 ppmv of Vanadium, and .02 ppmv of lead. Because of the higher fuel/air requirements of coal-derived low Btu gases, compared to natural gas, the allowable trace metal limits in the fuel will be lower. To maintain levels below the stated limits, the following equation is used, Ref. 15:

$$\frac{X_A + (F/_A)\, X_F}{1 + (F/_A)} \leq X_E$$

Table 5.6

Coal Derived Gases

Projected Properties Based on Ill. #6 Coal

(% Vol) GAS COMPOSITION	TYPICAL NATURAL GAS	INTEGRATED AIR BLOWN ENTR. FLOW	FREE STAND. O_2 BLOWN ENTR. FLOW	INTEGRATED AIR BLOWN FIXED BED	INTEGRATED O_2 BLOWN ENTR. FLOW
N_2+A	0.5	63.83	1.15	≈34	.8
H_2O	-	0.26	0.35	25-35	27
CO_2	1.8	6.35	8.68	8-9	6.4
CO	-	18.77	53.3	≈9.5	39.0
CH_4	93.3	0.11	0.27	≈3.8	0.2
C_nH_m	4.4	-	-	≈0.6	-
H_2	-	10.62	36.13	≈15-17	26.5
H_2S	-	< 0.06	< 0.12	< .03	< .09
NH_3	-	< 0.005	< 0.005	< 0.005	< 0.005
TRACE METALS	S E E T E X T				
LOWER HTG. VALUE					
Btu/lb (Btu/kg)	20277 (44711)	1307 (2882)	5198 (11462)	2232 (4922)	3909 (8619)
Btu/scf (Btu/m^3)	931 (32878)	91 (3214)	274 (9676)	132 (4662)	200 (7063)
HHV/LHV		1.0614	1.0678	≈1.20	≈1.13
STOICH T_{FLAME} °F (°C)	3870 (2132)	≈2950 (1621)	≈3995 (2202)	≈2870 (1577)	≈3740 (2060)
UPPER/LOWER FLAMMABILITY LIMIT RATIO (VOL. BASIS @ ATMOS. PRESS.)	2.9	3.2	10.7	3.2	7.4
F/A AT BASELOAD (WT. BASIS)	.016	.384	.075	.199	.101

where:

$(F/_A)$ = Fuel-to-air ratio (depends in part on heating value)

X_F = Contaminant concentration (weight) in fuel (ppmw)

X_A = Contaminant concentration (weight) in inlet air (ppmw)

X_E = Contaminant concentration limit (weight) in combustion products (ppmw)

Table 5.6 lists the nominal base load fuel-air ratios for the various gases considered. It can be seen that the coal-derived gases must be cleaned to a much lower trace metal level than natural gas.

Sulfur compounds (usually in the form of H_2S and COS) are of concern from both an environmental and corrosion standpoint. Values listed in Table 5.6 reflect environmental requirements.

The allowable low Btu fuel sulfur content can have some impact on the hot gas path hardware corrosion, but is particularly important to corrosion of the HRSG boiler. The corrosion of the boiler tubes is produced from the sulfuric acid created in the exhaust gas. Because of the large fuel flow required and the additional amounts of water in the combustion products, acid can condense at lower H_2S concentrations in low Btu gas than in natural gas. In some cases, even when the EPA SO_2 limit is met, acid condensation can occur and boiler cold end corrosion could result. This can be countered by raising the feedwater temperature sufficiently to bring cold end metal temperatures above the acid dew point. The penalty to steam system performance is nominal.

Also of concern to the gas turbine operation is the level of solid and liquid particles. The reason for this is twofold. First of all, the need to protect the fuel nozzle gas-metering orifices from erosion and plugging, and secondly, to prevent the uncontrolled injection of liquid slugs into the combustor. In the case of liquid slugs, excursions in firing temperature and gas turbine load as well as overtemperature of the hot gas path can occur. Plugged or eroded gas orifices can cause changes to temperature profile (traverse number) and liner metal temperatures.

For the case of low Btu gas, the presence of liquid water in the fuel has been found to cause blowout, probably due to a rapid lowering of flame temperature.

For these reasons, it is specified that solid particles be limited to 30 ppm maximum, with sizes of 10 microns or less for normal heating value fuels. Also, to prevent the formation of liquids, at least 50°F (28°C) of superheat is required.

The higher water content fuels will, of course, require closer attention to the superheat requirement. Experience has shown (Ref. 15, 17) that combustor design has a drastic effect on sensitivity to water in vapor form in the fuel gas. High water content is shown for the integrated air-blown fixed-bed and integrated oxygen-blown entrained-bed cases. These have a high H_2O content as a result of the sensible heat recovery system used. For these two cases, the effect would be increased turbine output due to higher mass flow, and lower thermal NOx generation. The latter is particularly useful to the oxygen blown case where thermal NOx generation on the dry gas could be significant.

Finally, the heating value of the gas itself will affect the size of the fuel gas system. For the air-blown entrained-bed system, volumetric flow rates will be on the order of 20 times those for natural gas. The high gas flows result in a higher turbine flow rate and higher compressor discharge pressures, and hence, cooling air temperatures.

The resulting increased bucket and blade loads can be compensated for by slightly backing off in firing temperature or by material improvements.

Table 5.7 summarizes the areas of concern listed above. Their effects on the gas turbine and plant hardware and remedial action are discussed in the following section. Following that, the coal-derived gases will be narrowed down to the two extremes to show the range of impacts on the gas turbine and power plant. Table 5.8 shows the relative impact of various gasification processes on the power plant equipment. The two extremes are the integrated air-blown entrained flow gasifier and the free standing, oxygen-blown entrained flow case.

Table 5.7

Coal Derived Gases

CHARACTERISTICS OF CONCERN	NATURAL GAS	INTEGRATED AIR BLOWN GASIFIERS		OXYGEN BLOWN CASES		IMPACT
		ENTR. BED	FIXED BED	INTEGRATED	FREE ST.	
STOICHIOMETRIC FLAME TEMP.	HIGH	LOW	LOW	HIGH	HIGH	EMISSIONS
FLAMMABILITY RATIO	BASE	1.1xBASE	1.1xBASE	2.5xBASE	3.7xBASE	COMBUSTION, SAFETY
CO CONTENT	--	MED.	LOW	HIGH	HIGH	TOXICITY
HEATING VALUE	HIGH	LOW	LOW	MED.	MED.	COMBUSTION/ FUEL SYSTEM SIZE
WATER CONTENT	--	LOW	HIGH	HIGH	LOW	COMBUSTION, PURGE
PARTICULATES	- - - - - - AS REQUIRED - - - - - -					
TRACE METALS	--	- - - AS REQUIRED - - -				CORROSION GAS CLEANUP SYSTEM
AMMONIA	--	- - - AS REQUIRED - - -				EMISSIONS GAS CLEANUP SYSTEMS

TABLE 5.8

COAL DERIVED GAS CONSIDERATIONS
RANGE OF IMPACT ON POWER PLANT

MAXIMUM	INTEGRATED, AIR BLOWN ENTRAINED BED
↓	INTEGRATED, AIR BLOWN FIXED BED
	INTEGRATED, O_2 BLOWN ENTRAINED BED
	INTEGRATED, O_2 BLOWN FIXED BED
MINIMUM	FREE STANDING, O_2 BLOWN ENTRAINED/FIXED BED

5.2.2 Design Impact of Coal-Derived Fuels

The characteristics of the coal-derived fuels have been described above, and areas of concern noted. They impact not only the combustor design but also many other areas of the gas turbine combined-cycle power plant. First, the effects of CDL's will be discussed, along with remedial action to be taken. This will be followed by similar discussion for coal-derived gases.

1. Coal-Derived Liquids

The concerns noted in Table 5.5 for coal-derived liquids do seem manageable by a logical sequence of corrective actions. For instance, as with petroleum crude and residual fuels, the fuel bound nitrogen levels, if less than approximately 0.25 percent can be corrected by water or steam injection in the gas turbine combustor. This will take care of the low FBN medium cut CDL's. Steam injection is preferred for combined-cycles because degradation in heat rate is less with steam injection than it is with water injection. Development work is proceeding on a dry NOx combustor. (See Section 4.1, Item G.) Indications at this time are that a dry, low NOx combustor will be longer than conventional designs, a fact to consider in the canted combustor used in the high reliability turbine. If adopted, the longer combustor may require a larger envelope, and a greater turbine centerline to-base distance to provide adequate clearance.

The NOx emissions resulting from fuels with high fuel-bound nitrogen (FBN) (>.25 percent by weight) is not controllable by water or steam injection. All of the heavy cut CDL's and some medium cut CDL's fall in this range. At present, the NOx control method with the higher probability of success is low temperature catalytic DeNOx using ammonia injection. The catalytic unit would be located within the heat recovery steam generator and would require uniform ammonia injection in a ratio of about one part of ammonia or a little more, to one part of NOx by volume in the exhaust. The ammonia plus NOx reaction has a fairly narrow temperature range highly dependent upon the catalyst. With present catalysts this temperature range is found inside the HRSG itself. Installing the catalyst in the HRSG is a major undertaking, since

the catalyst bed occupies significant volume and produces an increased pressure drop. The approach for the high FBN CDL's is to introduce a second parallel HRSG box to keep the pressure drop at reasonable levels. The two boxes would share a common steam drum. Development work is needed to determine effectiveness of the present catalysts with CDL's and also to evaluate whether corrosive species are generated in the DeNOx process which could affect HRSG components downstream of the catalyst. (Section 4.1, Item K)

The high level of aromaticity of the CDL's results in high flame luminosity and could result in high smoke, as in the heavy petroleum fuels. The corrective approach is to use a high reliability (machined ring liner) combustor and transition piece designed for the heavy petroleum fuels.

The alkali metal content expected in the medium cut CDL's meets the present fuel specs. However, it will exceed the specifications in the case of the heavy cut liquid. Two approaches are needed for the heavy cut CDL's. The first is to develop off-base fuel washing techniques to remove the trace metals. As already noted, this is less straightforward for the CDL's due to their high specific gravity and poor water rejection. As a backup, material and cladding developments for the hot gas path parts should be pursued in order to provide added protection should the washing techniques not be able to bring the alkali level down to the present fuel specification.

The ash content of the CDL will affect the deposition rate on the hot gas path components. In cases where the ash content exceeds 50 ppmv, provisions must be made for turbine nutshelling and turbine washing as in the petroleum base heavy fuels. These techniques have been discussed extensively in Tasks 1 and 2. In addition, for the heavy cut CDL with high ash content, the firing temperature may be cut back to 1850°F (1010°C) to reduce the ash deposition rate.

Effects of the CDL constituents discussed above are tabulated in Table 5.9. In addition to this, there are a number of other factors to consider. For instance, the flash point of some, or all, of the CDL's may be low, as is typical of petroleum crude and residual oils. Depending

Table 5.9

CDL Constituent Effects and Remedial Action

CONSTITUENT	MEDIUM CUT CDL		HEAVY CUT CDL
C	High C ⟶ High Smoke and High Flame Luminousity ∴ Use Combustor Designed for #6 Petroleum Fuel		Same as Medium Cut
N	FBN ⟶ NOx		FBN ⟶ NOx
	If N <.25% Water/Stm. Inject. or Develop Dry-Lo NOx Combustor	If N >.25% Catalytic DeNOx or Devel. Dry LoNOx Combustor or Devel. Dry LoNOx Comb. + Catalytic DeNOx	N >.25% ∴ Cat. DeNOx or Develop Dry LoNOx Comb. or Develop Dry LoNOx Combustor + Catalytic DeNOx
Na + K	Na + K <1 ppmw ∴ Meets Present Fuel Specs		Na + K >1 ppmw ∴ Fuel Wash to 1.0 ppmw and/or Mat'l. or Cladding Development
Ash	Ash ⟶ Deposition		Ash ⟶ Deposition
	If Ash <50 ppmw Present Design Approach Can Handle	If Ash >50 ppmw Turbine Nutshell and Turbine Wash	Ash >50 ppmw ∴ Turbine Nutshell and Turbine Wash Reduce Firing Temp. to 1850°F

on the flash point of the specific CDL fuel to be burned, it may be necessary to provide explosion proofing for the electrical devices and wiring located on the gas turbine base and on its off-base CDL fuel skids.

The higher viscosity of the CDL's will require a high pressure atomizing air system similar to that for heavy petroleum fuels. It is expected that the gas turbines will be started and shut down on petroleum distillate, and that the medium cut CDL's will be compatible with the petroleum fuel. As a result, a common on-base fuel system can be used, with an off-base transfer skid providing the equipment to transfer from petroleum to medium cut CDL. In addition to the transfer valve, this equipment includes separate low pressure filters upstream of the transfer valve, pressure gauges, pressure switches and flow meters to monitor performance of the fuel filters and fuel delivery system. The added electrical controls required are fuel transfer permissive logic and transfer control.

If very high quality medium cut CDL;s are available, the gas turbine could be run entirely on CDL fuel and the petroleum distillate system would be unnecessary. Controls would be the same as for distillate operation.

For the heavy cut CDL's, there is concern regarding their compatibility with petroleum fuels. Therefore, to prevent polymer formation plugging of the fuel system components and piping, a separate off-base liquid fuel system will be provided for handling the heavy cut coal-derived liquid. The off-base skid will be a totally enclosed (lagged) module and will include an A.C. motor-driven main fuel pump, low pressure and high pressure fuel filters, stainless steel flow divider, and necessary stop and control valves and instrumentation. Interconnecting tubing runs will be routed from the skid to the individual fuel nozzles in the gas turbine combustion chambers. The distillate fuel and the heavy cut coal-derived liquid will not be mixed at any point in the system until they reach the gas turbine combustors. The CDL fuel piping and tubing should be lagged and heat traced. The distillate piping and fuel system will remain unchanged. However, a purge system must also be provided to evacuate either distillate or coal-derived liquid from the associated

fuel tubing in the fuel nozzle area when running on the other fuel to prevent coking in the fuel nozzles. The purge system consists primarily of piping and control valves which utilize extraction air to force the liquid fuel not being burned out of the fuel nozzle area. Interconnecting piping and conduit between the accessory base and the off-base fuel handling skid must be provided to supply the skid with control oil and electric power to interface the operation of the skid with the gas turbine controls.

Gas turbine controls for the heavy cut CDL case will provide for transfer from distillate to CDL when it reaches a specific point during the startup sequence. A transfer is made back to distillate during the shutdown sequence. The control configuration to accommodate the two fuel systems has fuel splitting and transfer logic similar to dual fuel liquid/gas systems, where, as in this case, two separate fuel delivery and metering systems are used. For fuel transfer or operation on both fuels, the total fuel command signal is proportioned between the two individual fuel systems. Each fuel system then functions to maintain its portion of the total fuel command. When operating entirely on one fuel, purge of the fuel nozzle of the fuel system which is not supplying flow to the combustor is initiated by the controls.

Finally, the CDL fueled cases will require separate fuel tanks for the coal-derived liquids. Typically, a petroleum distillate fueled plant will use three fuel tanks providing two weeks of fuel storage. Three tanks are used to allow for water, etc. to settle out of the fuel in one tank while the second tank is being filled and a third tank is supplying fuel to the operating gas turbines. When CDL fuels are used, an additional fuel tank is installed. Two tanks are then devoted to CDL and two tanks to petroleum distillate. This will still allow adequate settlement time between fuel receipt and use.

2. Coal-Derived Gases

The "over the fence", free-standing oxygen blown gasifier case will present the minimum impact on the power plant design, the major impact being on the gas turbine, itself. The integrated plants will involve major design changes in not only the gas turbine, but also the steam

system and the overall plant. In the following discussion, the air-blown entrained flow case is chosen to typify the integrated plant. Due to the major differences between the free-standing and integrated cases, they will be discussed separately.

Free-Standing Oxygen-Blown Entrained Bed

In this "over the fence", oxygen blown case, the heating value of the gas is relatively high and from a combustion aerodynamics standpoint will require modest modifications from existing designs. However, as already noted, the high stoichiometric flame temperature of this fuel causes excessive generation of thermal NOx. The near-term solution is to suppress NOx by steam injection. A dry, low NOx combustor is a solution requiring more development, but with the potential for improved heat rate by eliminating the injection steam requirement.

It is expected that the gas turbine start up and shut down will be on distillate fuel, and that the distillate will serve as a backup fuel in case of interruptions of gas service.

The fuel gas for this plant is assumed to normally be in unlimited supply and to maintain rated pressure independent of usage rate. The controls configuration will be for a dual fuel, distillate/low Btu gas system. This necessitates the appropriate fuel transfer logic and addition of the gas fuel control hardware.

The fuel gas control functions are the same as the high Btu or natural gas control functions. Because the fuel gas supply is not limited and its production is not integrated with the gas turbine cycle, no change in the load control functions is necessary. The increased turbine mass flow (due to higher fuel gas flow rates) requires the addition of a variable exhaust temperature control schedule and a compressor pulsation protection function. Turbine start up is on distillate fuel and full load operation is available on either distillate fuel or fuel gas.

The electrical control modification, contained in an auxiliary control panel, therefore, includes dual fuel function, variable exhaust temperature function, compressor pulsation protection, gas fuel control, and

additional logic functions. Depending on the fuel supply, fuel pressure regulation, via the stop/ratio valve, as in the high Btu gas systems, may be required. The control hardware modifications are housed in a fuel control skid. The gas fuel stop valve, gas fuel control valve, gas pressure regulation (if required), the valve support hardware and instrumentation make up the fuel control skid.

On the turbine base, individual 6 inch (152 mm) piping pigtails are connected to an 18-inch (457 mm) gas manifold which straddles the gas turbine and is mounted on flexible supports to absorb thermal growth. A 24-inch (610 mm) piping run interconnects the gas manifold to the gas valve skid which is located close to the unit. Figure 5.2 depicts the general arrangement of the gas piping in the turbine compartment. The fuel gas piping will be suitably lagged and heat traced. The liquid fuel system remains unchanged from the standard system. By virtue of the size of the fuel gas pigtails, heavier structural loads will be imposed on the combustor casings which will be reflected through the gas turbine structure.

In order to evacuate the gas piping while operating on distillate and to force distillate from the fuel nozzle area during operation on gas, a purge system is required. The purge system utilizes some additional extraction air and consists primarily of piping and control valves.

Interconnecting piping and conduit is required between the accessory base and the gas valve skid to supply the skid with control oil and electric power to interface the operation of the skid with the gas turbine controls.

The addition of the large gas supply manifold will require a new lagging configuration around the turbine compartment. A new higher compartment roof will be required to fit around the added manifold, and the enclosure will be wider than the conventionally fueled design. Since the lagging walls will be wider than the distillate fueled configuration, different walkways will be required around the turbine compartment. The area inside the turbine compartment will be significantly increased by the relocation of the walls and rising of the roof. Therefore, modifications to the CO_2 distribution piping will be required to provide

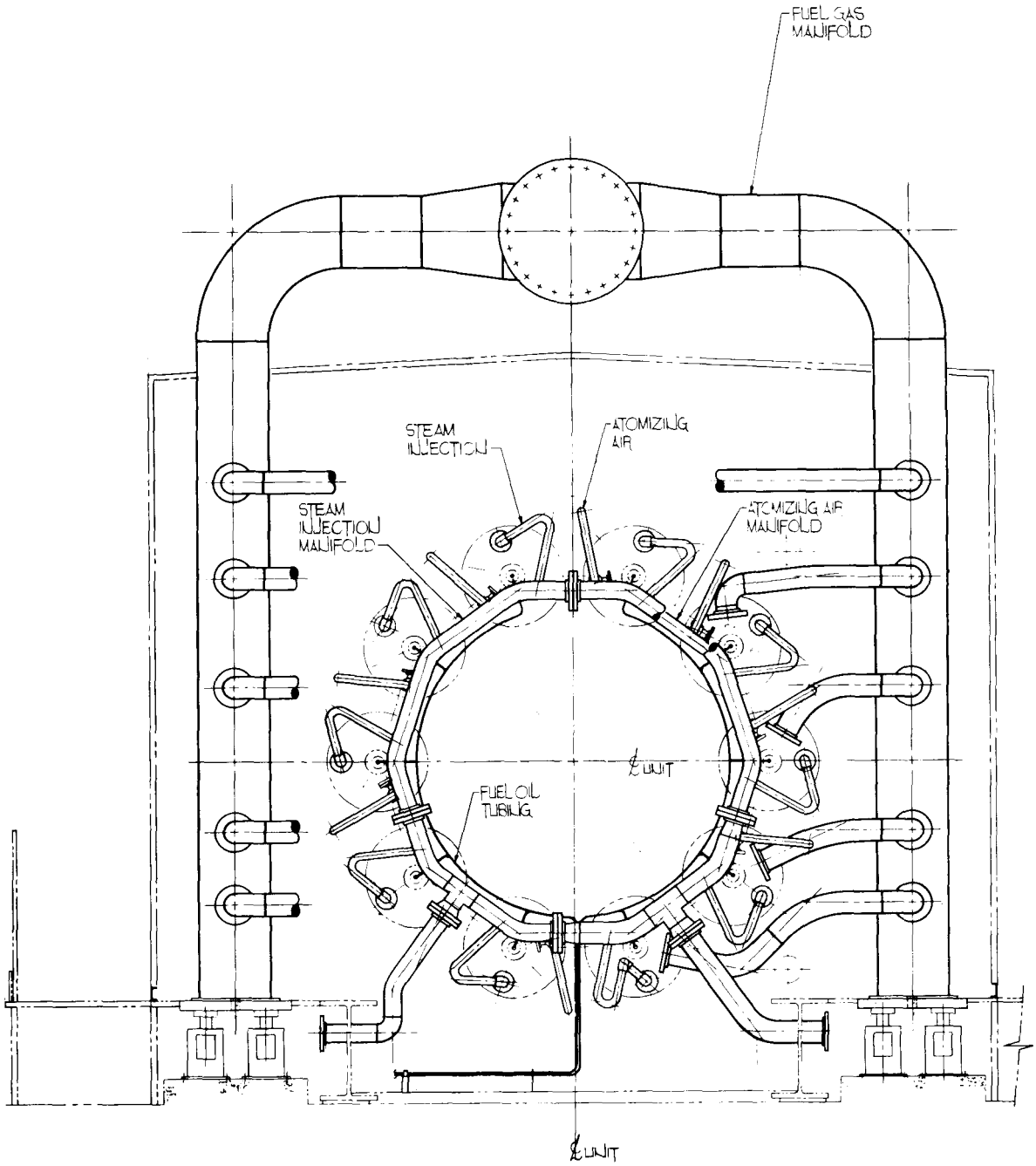

Figure 5.2: Fuel Gas Piping Arrangement

adequate fire protection. In addition, a larger CO_2 storage system will be required due to the increased volume. Also, due to the high hydrogen and CO content of the fuel gas, special care must be taken with the enclosure design and the ventilation system to prevent entrapment of gas that may escape inadvertently from the fuel system into the enclosure. Depending on results of such a study, explosion proofing of electrical components on the base and in the fuel skid may also be required.

The steam system and the balance of plant for this free standing intermediate Btu gas will be the same as for a distillate-fueled machine.

Integrated Air-Blown Entrained Flow Gas Supply

Use of this system has a major impact on the design of the gas turbine, the steam system, and the overall plant, it involves the addition of an integrated fuel gas plant with many hardware, operation, and control implications. Figure 5.3 shows the system schematic for such a plant. Integration between the power plant and fuels plant is obtained by extracting air from the gas turbines to feed the gas plant, and by interconnection of the steam systems of the gas plant and the power plant. A detailed system description is given later, but a brief description follows.

Air is extracted from the gas turbine compressor discharge, cooled and compressed further in a steam turbine driven booster compressor and delivered to the gasifiers. Pulverized coal is also delivered to the gasifier in a water slurry. The raw, high temperature gas leaving the gasifier is first cooled in a Synthetic Gas Cooler (SGC) and, after further cooling, ammonia and H_2S are removed in the gas cleanup system. The clean gas is then reheated in a regenerative gas heater and then in a hot water heater before it is delivered to the gas turbine.

The steam system utilizes gas turbine exhaust heat as in a typical combined-cycle plant, and also utilizes the considerable sensible heat content from the hot, raw fuel gas. This is done by supplying the Synthetic Gas Cooler with hot water from the HRSG's economizer. The resulting saturated steam is returned to the HRSG, where it is superheated before use in the steam turbine generator. Extraction steam from

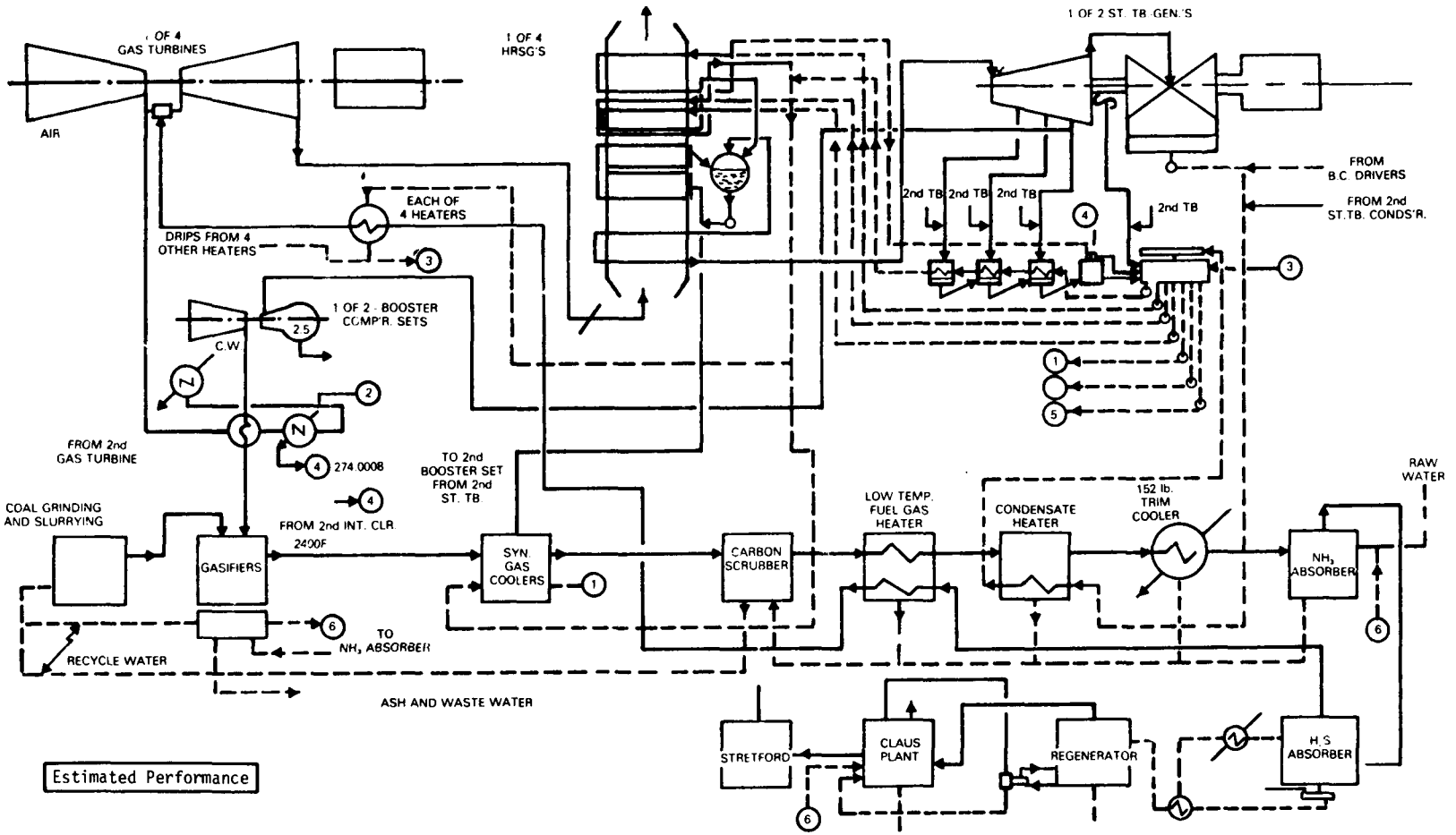

Figure 5.3: Integrated Air Blown Entrained Flow Gasification - Combined Cycle System

the main steam turbine is supplied to the boost compressor drive turbines.

The impact on the power plant design will first be discussed from the gas turbine system standpoint, then the steam system and finally the remainder of the plant.

Gas Turbine System

The low heating value of the gas requires major re-design of the gas turbine combustion system to achieve satisfactory operation over a reasonable load range (Refs. 15 and 17). Figure 5.4 shows a comparison of the cylindrical combustion liner used in the General Electric conventionally fueled gas turbines and the variable cross section liner found to be well-suited for certain low Btu gases. Figure 5.5 compares the fuel nozzle/cap cowl assembly for the conventional dual fuel (petroleum distillate/natural gas) to that used in the low Btu fueled combustor developed for the Powerton Program (Refs. 17 and 18). The very high volumetric flow rate of this low Btu gas requires very large gas nozzle holes and extra precautions to assure good mixing. Future designs may incorporate multiple fuel nozzles to provide good air/gas mixing in limited space and will, of course, incorporate applicable reliability features from the conventionally fueled high reliability design. It is most likely that the air blown low Btu gas will require a longer combustor. Due to the canted combustor design of the baseline High Reliable Gas Turbine, extending the combustor length may require increasing the turbine centerline height above the base to allow adequate clearance. Due to the low flame temperature of the air-blown gasifier product, this case will not require steam or water injection to control thermal NOx.

The integrated gasifier design also involves many changes in the gas turbine control system and fuel system and requires the addition of provisions for air extraction (Ref. 18) to deliver gas turbine compressor discharge air to the gas plant. Figure 5.6 shows the on-board piping arrangement for the air extraction system. Four 8-inch (203 mm) pipes are connected at four locations on the compressor casing to route the extraction air to a 12 inch (305 mm) manifold which straddles the gas turbine. The 12-inch (305 mm) manifold is interconnected to an

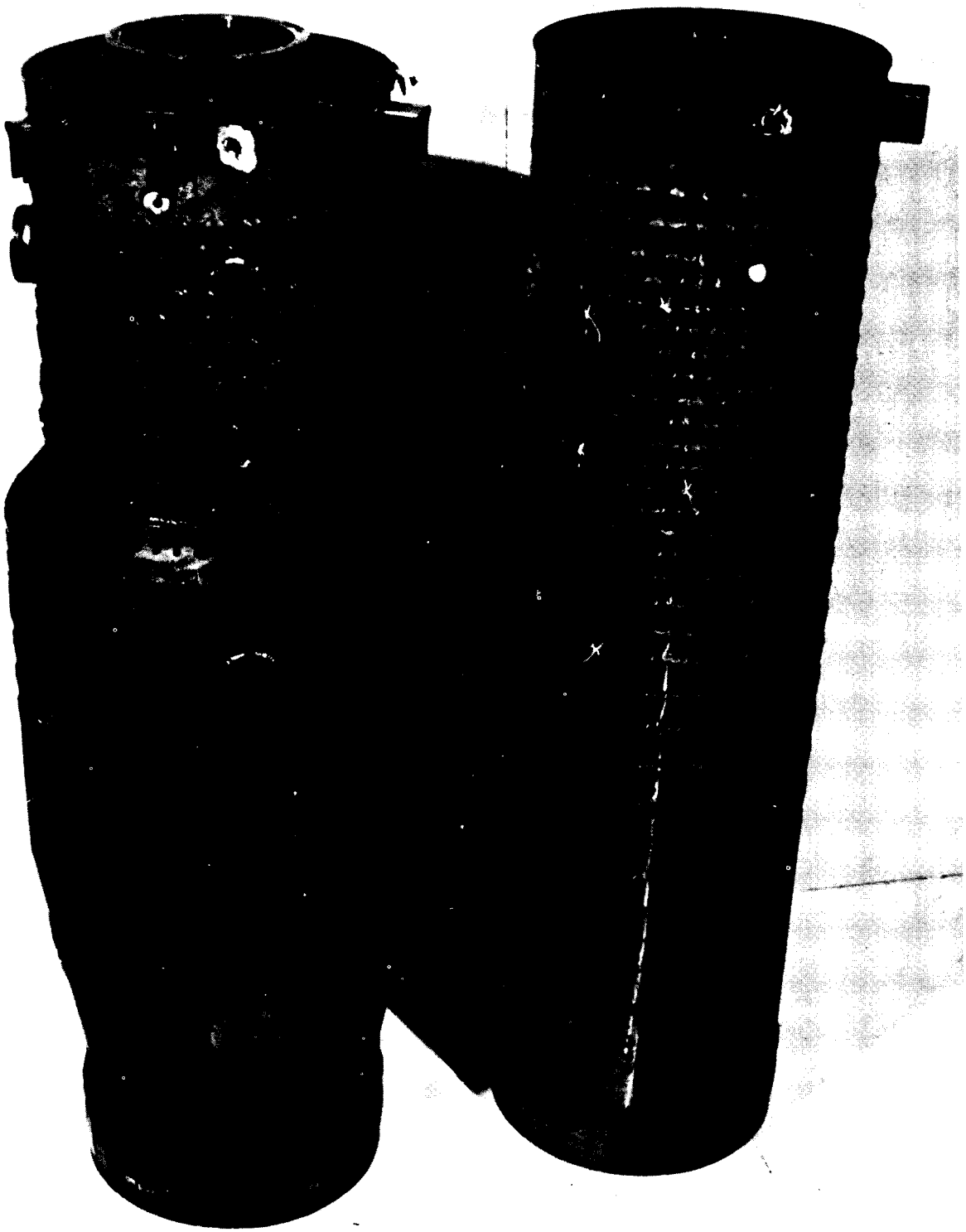

Figure 5.4: VCS and Conventional Combustors

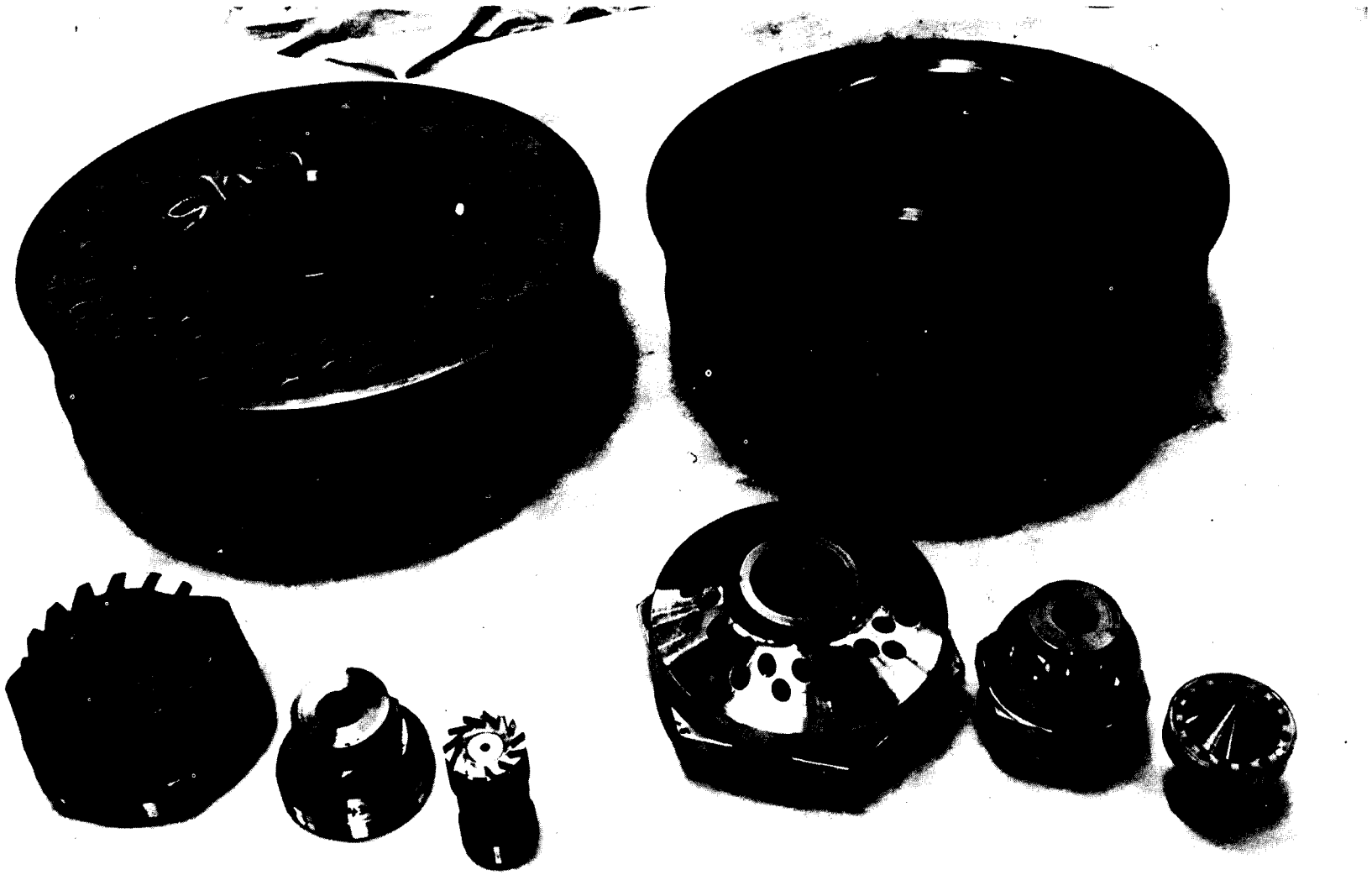

Figure 5.5: Conventional and Low Btu Cap-Cowl Assemblies and Fuel Nozzle Pieces

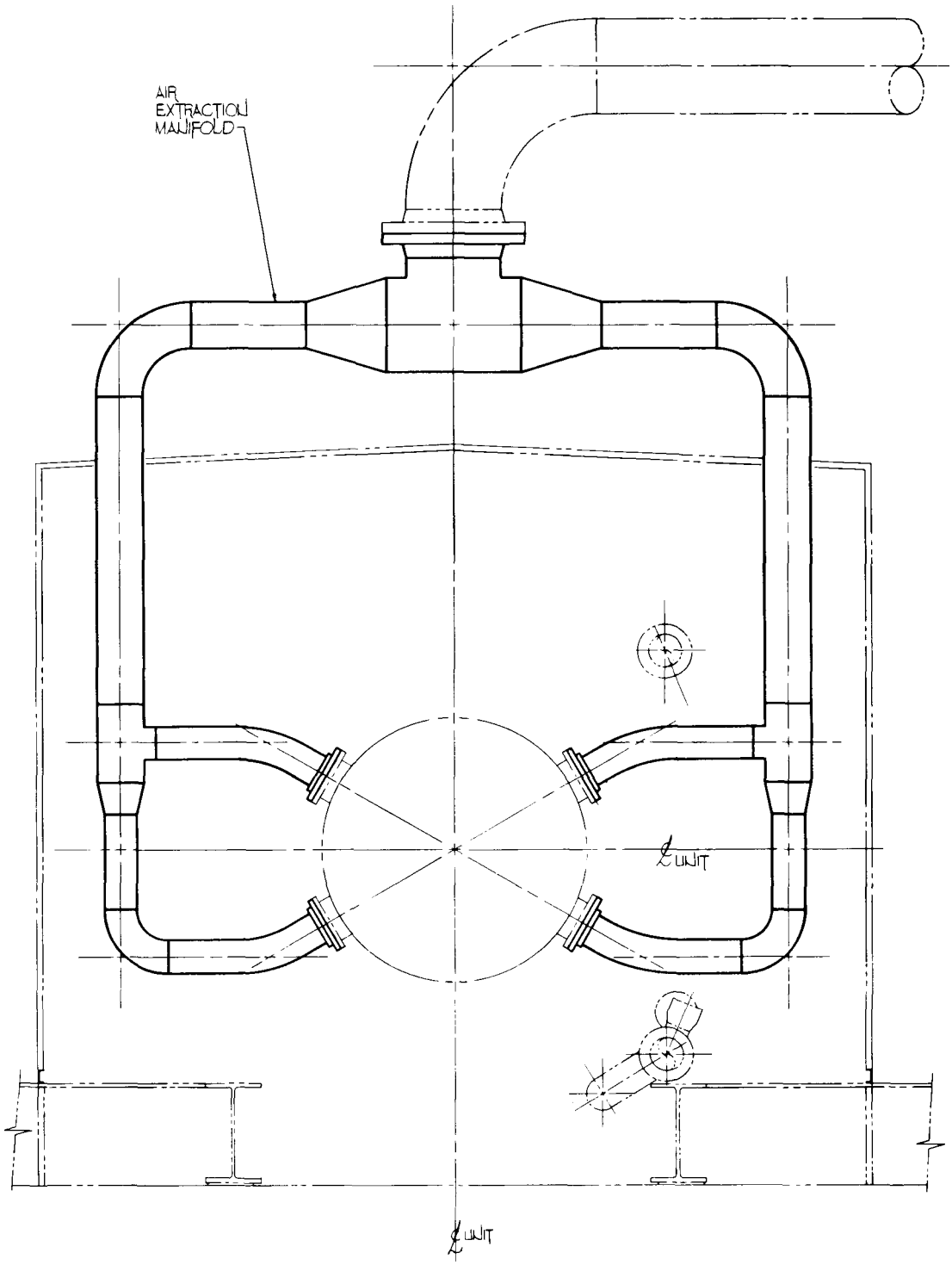

Figure 5.6: Extraction Air Piping Arrangement

extraction air skid via a 24-inch (610 mm) piping run. The extraction air skid is a fully enclosed (lagged) module which houses a 16-inch (406 mm) hydraulically operated extraction air isolation valve. In addition to the extraction air isolation valve and interconnecting piping, the extraction module includes hydraulic components and electric devices necessary to accomplish the required valve functions during startup, shutdown, and normal operation. A schematic diagram of the air extraction skid is given in Figure 5.7.

The on-board gas fuel piping is as shown earlier in Figure 5.2. Individual 6-inch (152 mm) piping pigtails are connected to a 18-inch (457 mm) gas manifold which straddles the gas turbine and is mounted on flexible supports to absorb thermal growth. The fuel gas piping will be suitable lagged and heat traced around the turbine compartment. (Due to the gas's high water content, the fuel gas lines will probably be heat traced throughout the plant). A 24-inch (610 mm) piping run interconnects the gas manifold to the gas valve skid which is located close to the gas turbine unit. The gas valve skid is also fully enclosed (lagged) and houses a 16-inch (406 mm) gas stop valve for fuel shutoff and a 16-inch (406 mm) gas control valve for flow modulation, as shown in the schematic diagram of Figure 5.8. In addition, it houses hydraulic components and sensors to monitor fuel gas conditions and provide input to logic, sequencing and control functions.

The massive fuel gas pigtails and air extraction piping are designed with flexibility to reduce piping loads on the combustors and the combustion wrapper. As in the MBtu gas-fueled case, heavier structural loads will be imposed on these components which will be reflected through the gas turbine structure.

Interconnecting piping and conduit is required between the accessory base and the air extraction and gas valve skids to supply the skids with control oil and electric power to interface the operation of the skids with the gas turbine controls.

Figure 5.9 shows an artist's conception of the relationship of the air extraction and gas valve skids to the gas turbine unit. A conventionally fueled installation is also shown for comparison. (Note: shown in

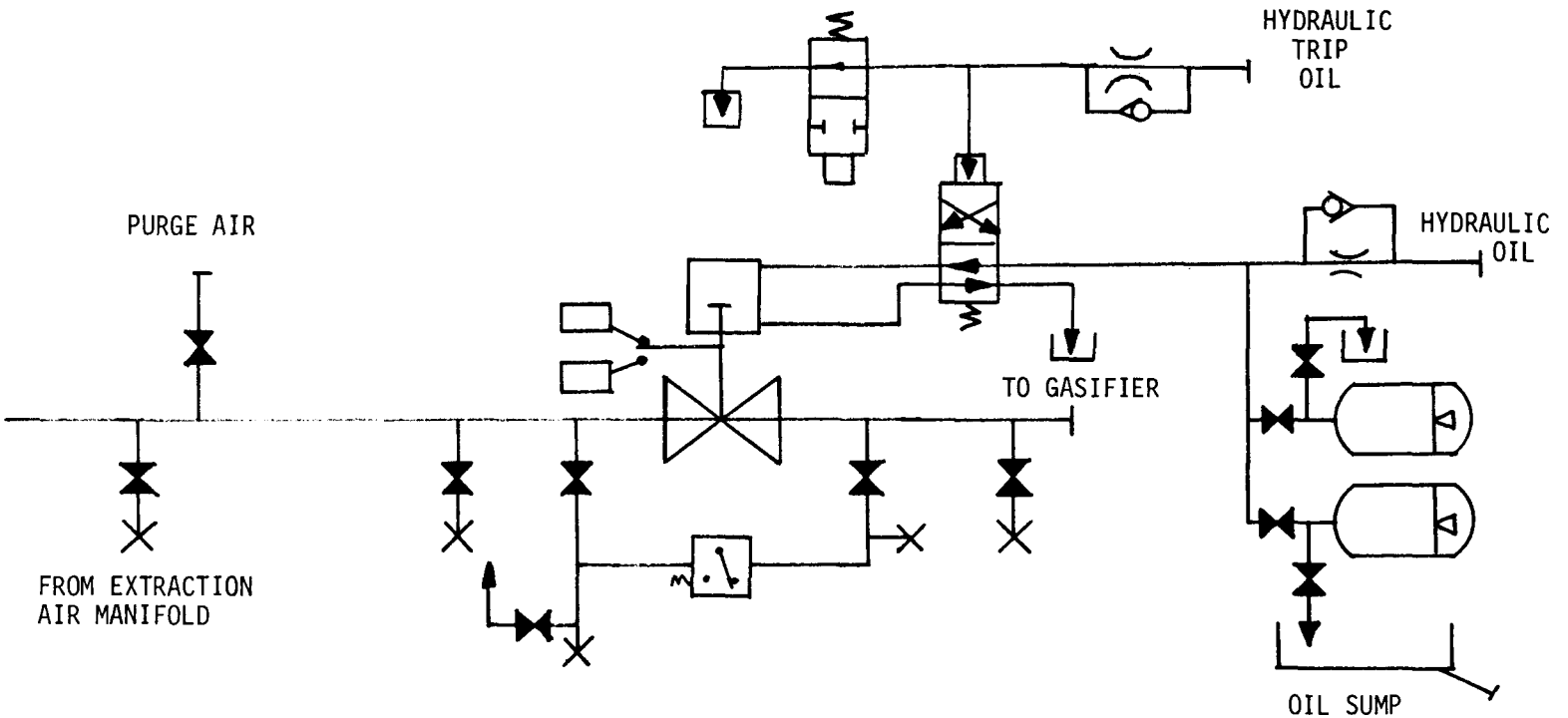

Figure 5.7: Extraction Air Skid Schematic

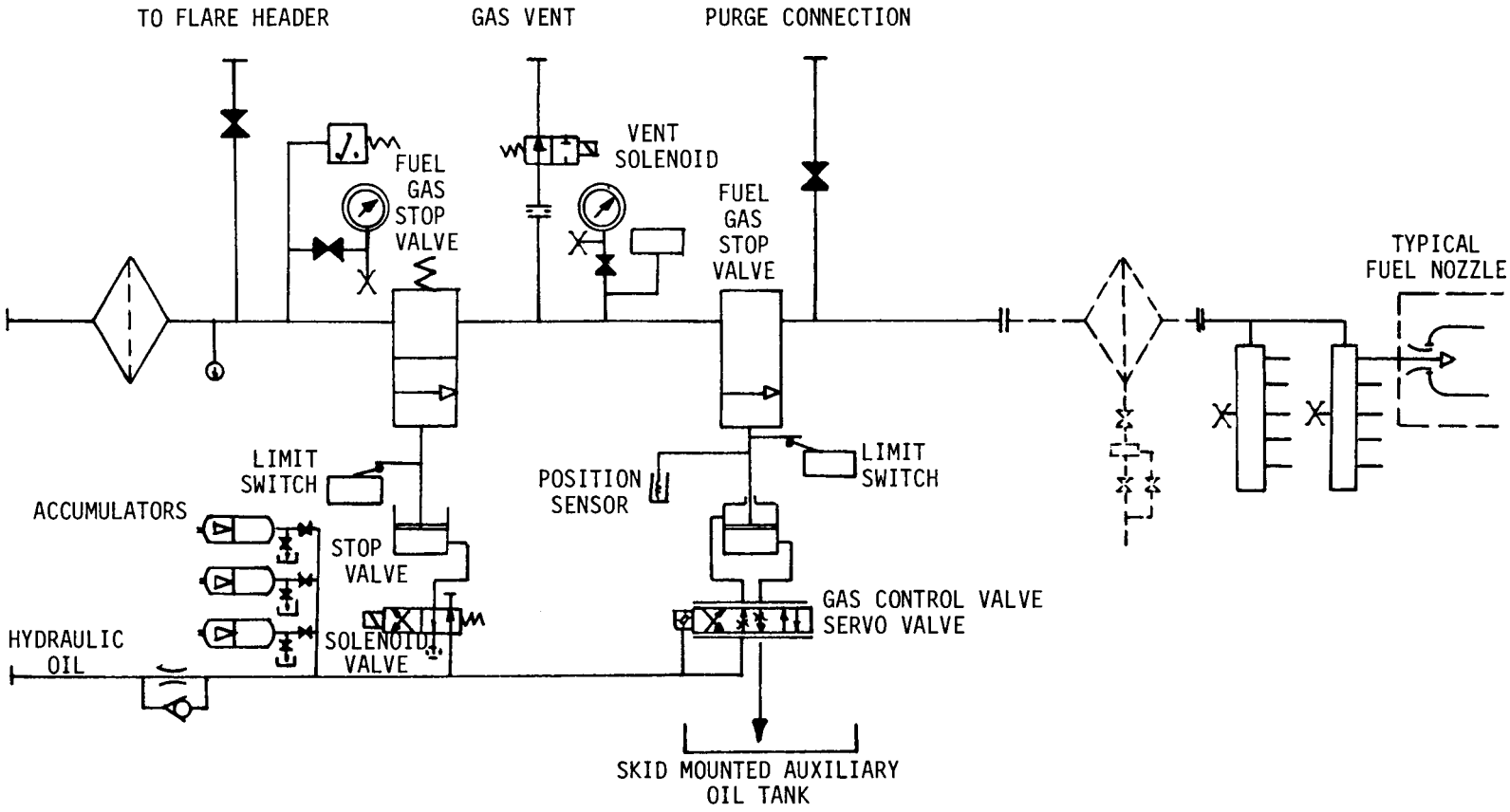

Figure 5.8: Fuel Gas Control Schematic

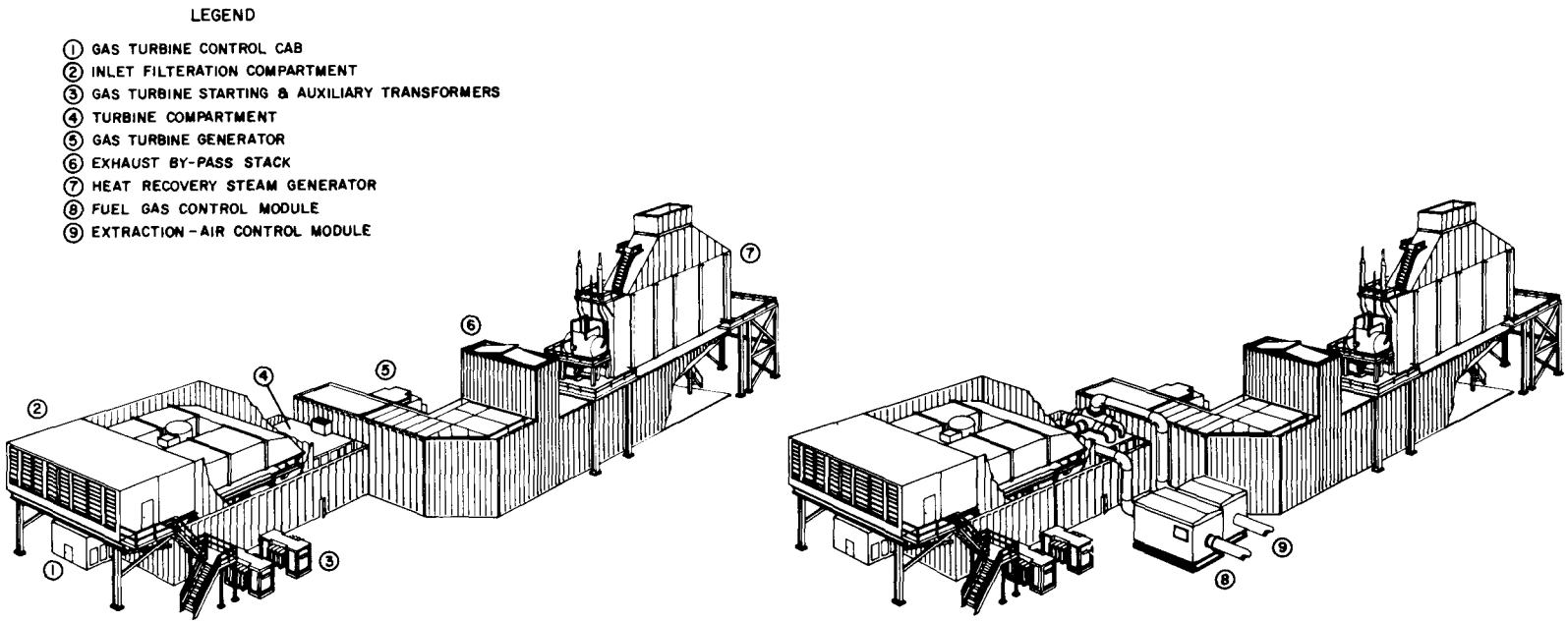

Figure 5.9: STAG 407E GE Turbine/Steam Generator Set (Left) and a Typical Conversion for Low Btu Coal Gas (Right)

Figure 5.9 is the second HRSG base required in the low Btu gas system to accommodate the larger exhaust gas mass flows and large gas plant steam generation discussed later).

The liquid fuel system remains unchanged from the standard distillate system and will be utilized for startup and shutdown on distillate. In order to evacuate the gas piping while operating on distillate and to force distillate from the fuel nozzle areas during operation on gas, a purge system is required. The purge system utilizes some additional extraction air and consists primarily of piping and control valves. Figures 5.10 and 5.11 show the plan and elevation views of the present market offering gas turbine as it will appear with the piping for the above systems. Lagging modifications will have to be made to accommodate the piping systems and walkways changed. Since the area inside the turbine compartment will be significantly increased by the relocation of the walls and raising of the roof, modifications to the CO_2 distribution piping will be required to provide adequate fire protection. In addition, a large CO_2 storage system will be required due to the increased volume.

Gas Turbine Operation and Control

Operation with an integrated air-blown entrained flow gasifier plant requires changes to the conventional control and operating concept of the standard gas turbine. This is due principally to the limited fuel supply capacity of most low Btu coal gas production facilities that are integrated into the overall power plant, with process air supplied by the gas turbine. Conventional gas turbine operation assumes a basically infinite fuel supply at the required pressure and temperature, and no extraction air. If fuel gas pressure or temperature exceed design limits then fuel transfer or shutdown normally occurs. For the integrated gasification plant/gas turbine the fuel supply is a dynamic parameter intimately tied to the overall plant dynamics. This will require changes in philosophy when designing the gas turbine controls, and the need for significant system analysis early in the overall plant design phase.

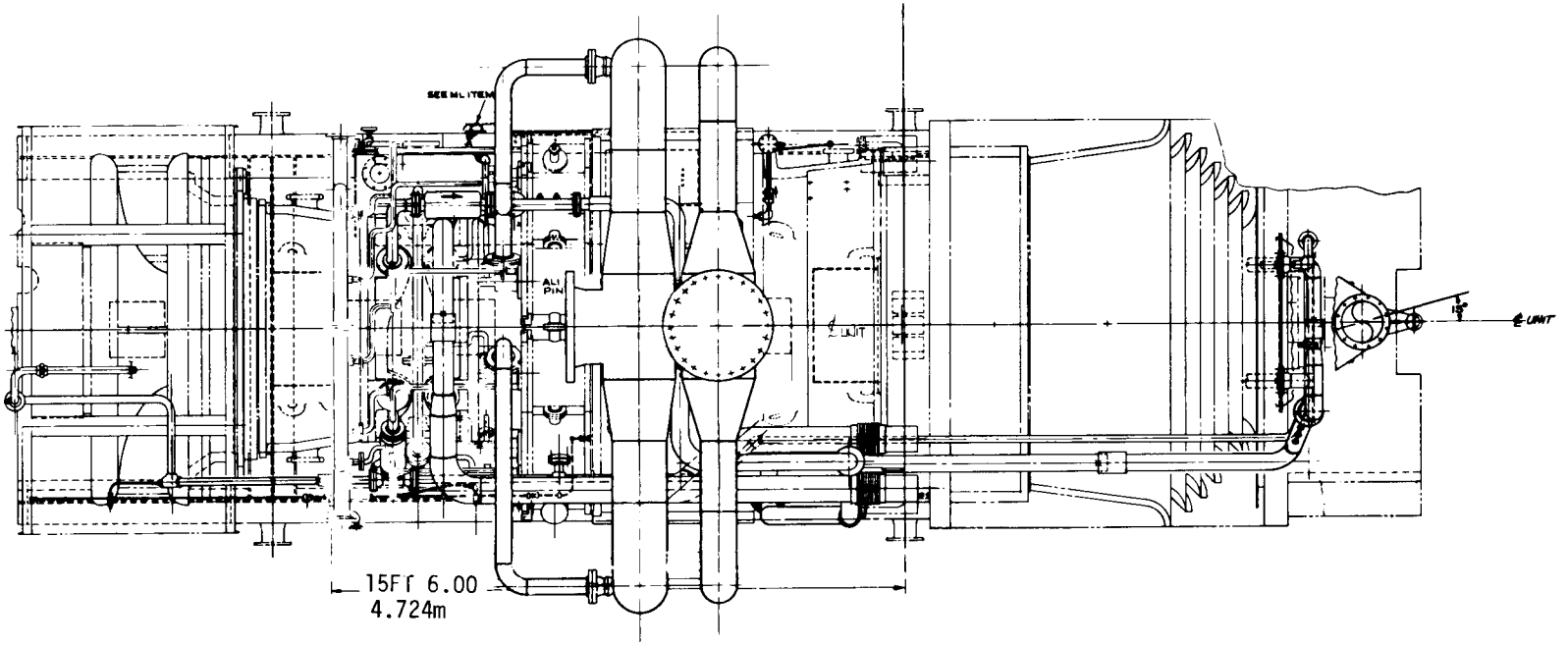

Figure 5.10: Fuel Gas/Extraction Air Piping Arrangement
(Plan View)

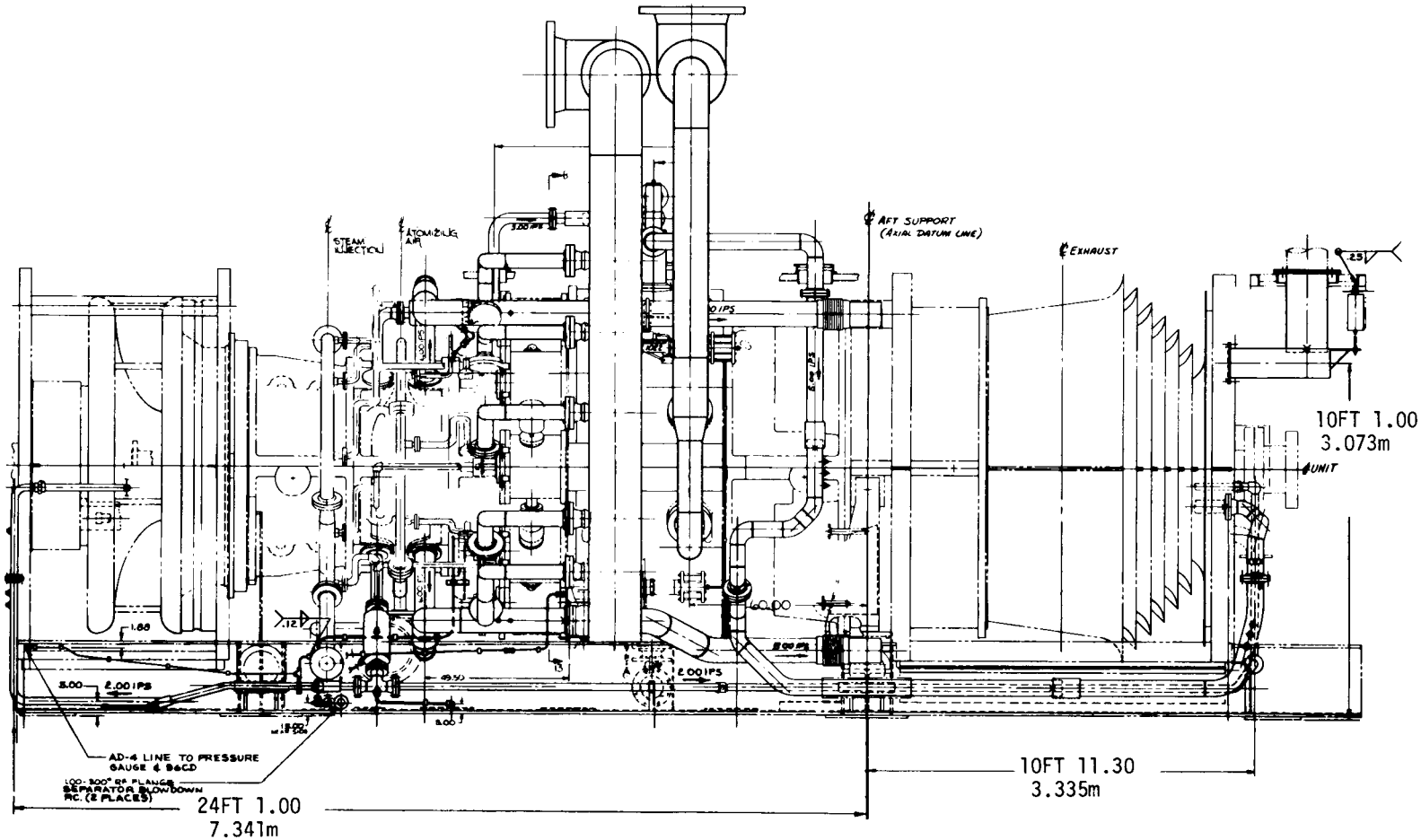

Figure 5.11: Fuel Gas/Extraction Air Piping Arrangement (Elevation View)

Startup of the plant and achievement of significant power output on low Btu fuel gas will normally require close coordination of all plant components. This is due to the fact that gas turbine extraction air is used in the gasification process. Therefore, the capability to start the gas turbine independently of the fuel gasification plant is necessary. Assuming that the startup, or alternate fuel is distillate oil, the following paragraphs contain brief descriptions of expected operating procedures.

Gas Turbine Start - The power plant will be started on distillate oil and brought to full-speed-no-load (FSNL) per standard practice. No air extraction will occur during startup. Air extraction is permitted once FSNL has been achieved. If the unit is to be loaded, then it will be synchronized and loaded to a minimum level before initiating any extraction flow to the gasification process.

Distillate Fuel Operation - The unit is capable of operating over the full load range on distillate with or without air extraction (load is reduced when air is extracted).

Dual Fuel - It should be noted that during dual fuel operation, the control system, as developed, will quickly and automatically modulate the liquid fuel flow rate as necessary to maintain turbine output approximately constant during gas supply system transients (i.e., heating value, flow, etc.). This control feature will substantially increase the power generation reliability.

Low Btu Gas - Once the unit is transferred completely onto gas fuel it is possible to operate in three overall control modes:

1. Fuel Gas Pressure Control
2. Fuel Gas Pressure Droop
3. Gas Turbine Lead

Modes 1 and 2 are turbine-following; turbine power output is directly dependent on the rate of fuel gas production. In Mode 1, the gas turbine controls modulate the fuel gas control valve to control upstream fuel pressure to a preset value independent of turbine output. For

Mode 2, the gas control valve position is a function of upstream pressure, thus requiring a change in pressure to cause a change in fuel flow to the turbine (pressure droop). This mode will permit operation of more than one gas turbine on a common gas fuel header in a turbine follow mode. In the all-gas fuel mode the turbine output will fluctuate with changes in gas production rate, gas heating value, etc. For Modes 1 and 2, load changes are accomplished by changing fuel production rates first, i.e., changing extraction air flow, coal feed, etc. Mode 3 is the normal gas turbine control mode wherein fuel demand is not sensitive to pressure as long as upstream fuel gas pressure does not fall below a minimum preset value. For gas turbine lead (Mode 3), the load is first changed from the gas turbine control panel, resulting in a change in fuel demand. The gasifier would be in a follow mode for this case.

Sequencing - Due to the need to have the gas turbine operating before starting the gasifier, the turbine starting sequence is basically identical to that for a distillate fueled unit. Once the unit reaches operating speed, air can be extracted to start the gasifier. Significant time lapses may occur between steps of the sequence to allow for startup of other components in the plant such as booster compressors, gasifiers, gas cleanup system, etc. Once the gasification plant has been started, it is necessary to establish fuel gas quality at the fuel gas skid by venting a small flow back to the vent flare. When the purge of the upstream piping is complete, then a fuel gas purge of the fuel gas manifold begins. Once this purge is complete the fuel transfer can begin. This is done by slowly ramping open the fuel gas control valve and decreasing distillate fuel flow such as to maintain constant load. Fuel gas plant pressure must be above the pressure control setpoint for this to occur. Opening of the fuel gas control valve causes the plant pressure to decrease to the setpoint and the control valve modulates to maintain the upstream pressure at the setpoint. Distillate fuel flow is modulated to maintain constant load. After the fuel gas pressure settles at the setpoint, the distillate is slowly ramped to zero, thus causing gas turbine output to be entirely a function of fuel gas flow.

Gasifier/Gas Turbine Interfaces

In addition to the mechanical interfaces represented by extraction air and fuel gas piping, process interfaces and electrical interfaces exist between the gas turbine and the gas plant:

1. Process Interfaces - These are interfaces which affect the performance of the gas turbine such as fuel heating value, extraction air flow, etc., and are mainly of interest from a dynamic viewpoint. Limits on rates of change, upper and lower limits, etc., are important in sizing and design of the control system as well as hardware.

2. Electrical Interfaces - These are basically control interfaces in the form of logic, or permissive/protective functions, and control signals such as load references and "handover" signals such as for pressure control. A simplified fuel control schematic is shown in Figure 5.12. The box designated "Coordinated Plant-Load Pressure Control" actually contains an undefined (at this time) control interface between the gasification plant and the gas turbine. Consuming fuel gas at the same rate at which it is being produced, necessitates control of a very closely coupled dynamic process.

To assure balance of the gas turbine flows, the gas turbine air extraction from each turbine must be apportioned as a function of the gas being consumed by that turbine. This is effected by controlling the individual air extraction valves and is necessary because the extraction flow of more than one turbine may be the input to a single boost compressor.

The changes and additions to the electrical control functions fall in several categories. Obviously, a gas fuel control function and an extraction air control function are needed. The increased mass flow through the turbine which occurs when operating on low Btu gas introduces requirement for modification of the exhaust temperature control function, compressor pulsation protection function, modified load control function, additional speed/load control functions integrated with the fuel supply, and a dual fuel control function. The gas fuel control

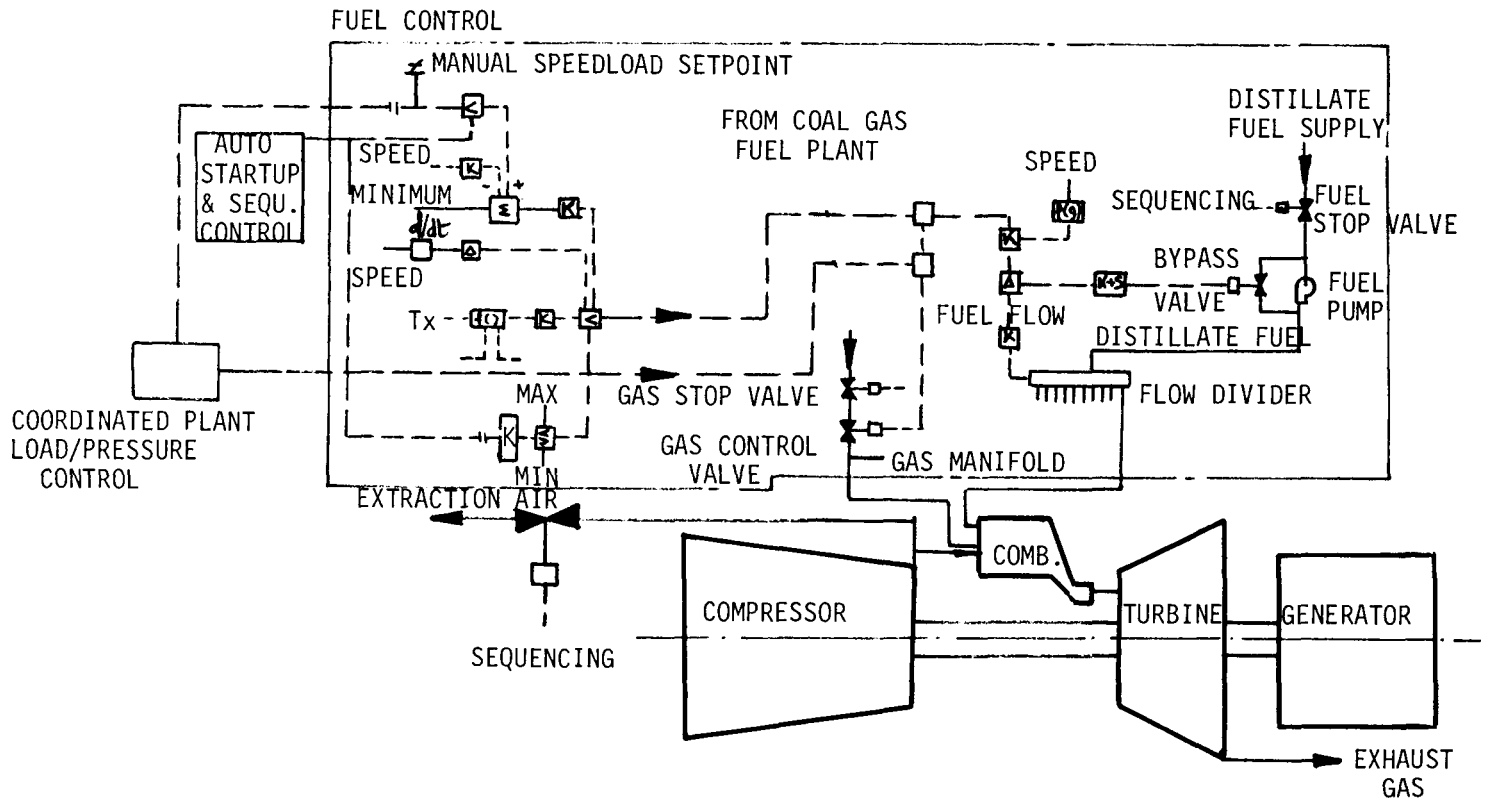

Figure 5.12: Fuel Control Schematic

function will accommodate the combustion system. Additionally the electrical controls are capable of participating in the high level of gas plant/gas turbine integration.

As with the high Btu gas control systems, sizing of the control components will be done for each application. This is necessary to properly account for all the operational considerations of individual plants.

Steam System Design Impact

As already noted, a high degree of interaction exists between the steam systems of the gas plant and the power plant, the Synthetic Gas Cooler essentially serving as a parallel evaporator section to the power plant's HRSG. (In this discussion, it is assumed that a non-reheat steam system with present combined-cycle state-of-the-art steam conditions will be used). Due to the resulting increase in economizer and superheater duty in the HRSG, the added internals will require either a larger HRSG or else two HRSG boxes in parallel. Later discussion will show the latter approach preferable in retrofit cases.

The resulting increase in steam generation capacity due to the Synthetic Gas Cooler will support a much larger steam turbine generator output. Again, in retrofit cases, this can be accommodated by addition of a second steam turbine, condenser and auxiliaries.

Two major factors dictate the high degree of steam side integration in this Integrated Gasification/Combined-Cycle System:

- State of the art of the Synthetic Gas Cooler (SGC) technology limits steam conditions to that of saturated steam (for near term consideration).

- Due to the very high raw gas temperature, the SGC's economizer can only furnish about 1/3 of the water required for use in the evaporator.

Consequently, the HRSG provides the superheating for the steam generated in the SGC and the HRSG, and also provides 40 to 50 percent of the SGC's

high temperature economizing requirements. This increased economizer capability contributed by the HRSG must be supplemented by the use of high pressure regenerative feed water heaters, as indicated, to permit the SGC to achieve its full steaming capability. A reduction in the supplementary economizer capability from either the HRSG or feedwater heaters would require more feed water heating in the SGC's drum, reduce the net steam generation and adversely affect overall plant efficiency.

High temperature water from the HRSG economizer is also utilized for clean gas heating to a level of 500°F (260°C). This is the most effective utilization of this heat, even though it requires an increased amount of high pressure extraction for feed water heating to meet the needs of the SGC, as described above.

Process air is extracted from the gas turbine compressor, pre-cooled, further compressed in a steam turbine-driven booster compressor, and then regeneratively reheated in one of the booster pre-coolers. Note that three stages of pre-cooling are used in order to recover and utilize the heat at the highest efficiencies. Heat from the first stage is utilized in the gasification system; second stage heat is recovered for low level feedwater heating.

Steam for the two booster compressor drivers is taken from the crossover point. This enhances overall plant performance by reducing the exhaust steam flow and the associated exit loss in the steam turbine.

Note that integration for improved plant efficiency is also used in the recovery of raw gas cool down heat in the condensate cooler. The heat pickup in the condensate cooler is limited to a level which leaves about 50°F (28°C) of feed water heating required in the deaerating heater in order to assure adequate deaeration.

Overall Plant Impact

The integrated air-blown entrained flow system has a major impact on the overall plant. In addition to the coal gasifiers and gas cleanup system, provision must be made for the coal storage and handling, and the process waste ponds must be greatly enlarged to accommodate gas plant

wastes. A rail siding must be added for coal delivery. Due to the increased steam generation, a larger steam turbine building is needed and a larger switch yard is also required. A larger building to house the deaerating steam supply heater (DASSH) system must also be provided. Larger cooling tower capacity, water treatment capacity, pumps and other associated auxiliaries will also be needed. The booster compressors, their steam turbine drivers and condensers and compressor air precoolers must be provided. The net result is a more than twofold increase in plant area.

5.2.3 Performance Comparisons of an Oil Plant Converted to Coal-Derived Fuels

The preceding sections emphasize the design impact of two coal-derived liquid fuels and two coal-derived gaseous fuels intended to represent the minimum and maximum impacts of coal-derived fuels. In considering performance and retrofit effects, a broader spectrum of fuels is needed. An internal design effort at the General Electric Company has considered in depth the consequences of conversion to a variety of coal-derived fuels as follows:

- A Coal-Derived Liquid (medium cut)
- A Coal-Derived Liquid (heavy cut)
- Low Btu Gas (from an air-blown entrained flow gasifier)
- Low Btu Gas (from a fixed-bed gasifier)
- Intermediate Btu Gas (from an oxygen-blown entrained flow gasifier)
- Intermediate Btu Gas (from a free-standing oxygen-blown gasification plant)
- Methanol

Four of the coal-derived fuel categories are representative of fuels which would be delivered to the combined-cycle plant by outside suppliers. These include the medium and heavy cut coal-derived liquds, methanol and an Intermediate Btu gas from a free-standing plant. The other three categories are gasious fuels which would be manufactured at the power plant site in a process which is integrated with the combined cycle.

The two coal-derived liquids have already been described in Table 5.3 and the four coal-derived gases in Table 5.6. The Methanol characteristics are given in Table 5.10.

It is to be understood that these selections were chosen only inasmuch as they are considered representative and draw upon broad classifications of coal-derived fuels which are near-term, viable possibilities.

1. Performance on Distillate

The intent of the General Electric design effort is to produce a current state-of-the-art, oil-fueled combined-cycle plant specifically designed for ease of conversion to any of the above coal-derived fuels. The resulting baseline oil-fueled plant is referred to as the Interim STAG. The word "Interim" refers to the fact that the operation of this plant on distillate or residual petroleum fuels is intended only as an interim step until the development and commercialization of coal-derived liquids and coal gasification processes can be applied. Performance aspects of the Interim STAG on petroleum based fuels are identical to those of the New Centerline Design except for the fact that steam injection is used for NOx suppression in the Interim STAG vs. the dry, low NOx combustor in the New Centerline Design. For brevity, in this report, the steam injection case will be labeled the "WET HRGTCC", and the New Centerline Design the "DRY HRGTCC". Both systems use four MS7000 gas turbines, each with its own unfired HRSG. The four HRSG's supply a single steam turbine generator via a common header.

Figure 5.13 shows the system schematic and estimated performance of the Dry HRGTCC, and Figure 5.14 shows the same information for the Wet HRGTCC. Table 5.11 compares the two performances. Added gas turbine mass flow due to steam injection results in a 10 MW higher gas turbine output for the Wet HRGTCC system. However, the steam extracted for wet NOx control results in an 11.5 MW lower steam turbine output for the Wet HRGTCC system. The overall result, after allowing for auxiliary power, is a net decrease of .250 MW output and an increase of 172 Btu/kWh in heat rate when the Wet (Steam) NOx is used.

Table 5.10

Methanol (CH_3OH) Liquid Fuel Physical Properties

Appearance	Clear, Colorless
Boiling point at 1 ATM, °F (760 mm Hg, °C)	148.4 (64.65)
Critical Pressure, atmos.	78.7
Coefficient of Cubical expansion: Per °F	0.666×10^3
Coefficient of Cubical expansion: Per °C	1.199×10^3
Dielectric constant at 68°F (20°C)	31.2
Explosive limits in air: Lower Limit, vol %	6.0
Explosive limits in air: Upper Limit, vol %	36.5
Evaporation rate (n-butyl acetate = 1)	3.7
Flash Point: Tag closed cup, °F (°C)	54 (12)
Flash Point: Tag open cup, °F (°C)	60 (16)
Freezing point, °F (°C)	-144 (-97.8)
Heat of combustion: Gas, Btu/lb (cal/g)	3175 (5711)
Heat of combustion: Liquid, Btu/lb (cal/g)	3013 (5420)
Heat of vaporization, Btu/lb (cal/g)	146 (262.8)
Ignition temperature, °F (°C)	878 (470)
Molecular weight, calculated	32.04
Odor	Alcohol-like
Refractive index η >	1.3285
Reid vapor pressure at 100°F, psi (38°C, KPa)	2.2 (15.17)
Solubility in alcohol, ether, water	Complete
Specific heat: At 32°F, Btu/lb/°F (0°C, cal/g/°C)	0.175 (0.566)
Specific heat: At 68°F, Btu/lb/°F (20°C, cal/g/°C)	0.185 (0.599)
Specific gravity: At 68/39.2°F (20/4°C)	0.7910
Specific gravity: At 68/68°F (20/20°C)	0.7924
Surface tension at 68°F, lbf-ft (20°C, N-m)	$30.57\ (22.55) \times 10^3$
Vapor density (air = 1)	1.11
Vapor pressure at 68°F, ATM (20°C, mmHg)	0.126 (96.0)
Viscosity at 68°F, lb-sec/in^2 (20°C, Pa-sec)	$4.089\ (0.593) \times 10^3$
Weight, pounds per gallon at 60°F (Kg/liter at 16°C)	6.63 (0.794)

NOTE: No fuel bound nitrogen, alkali metals or vanadium

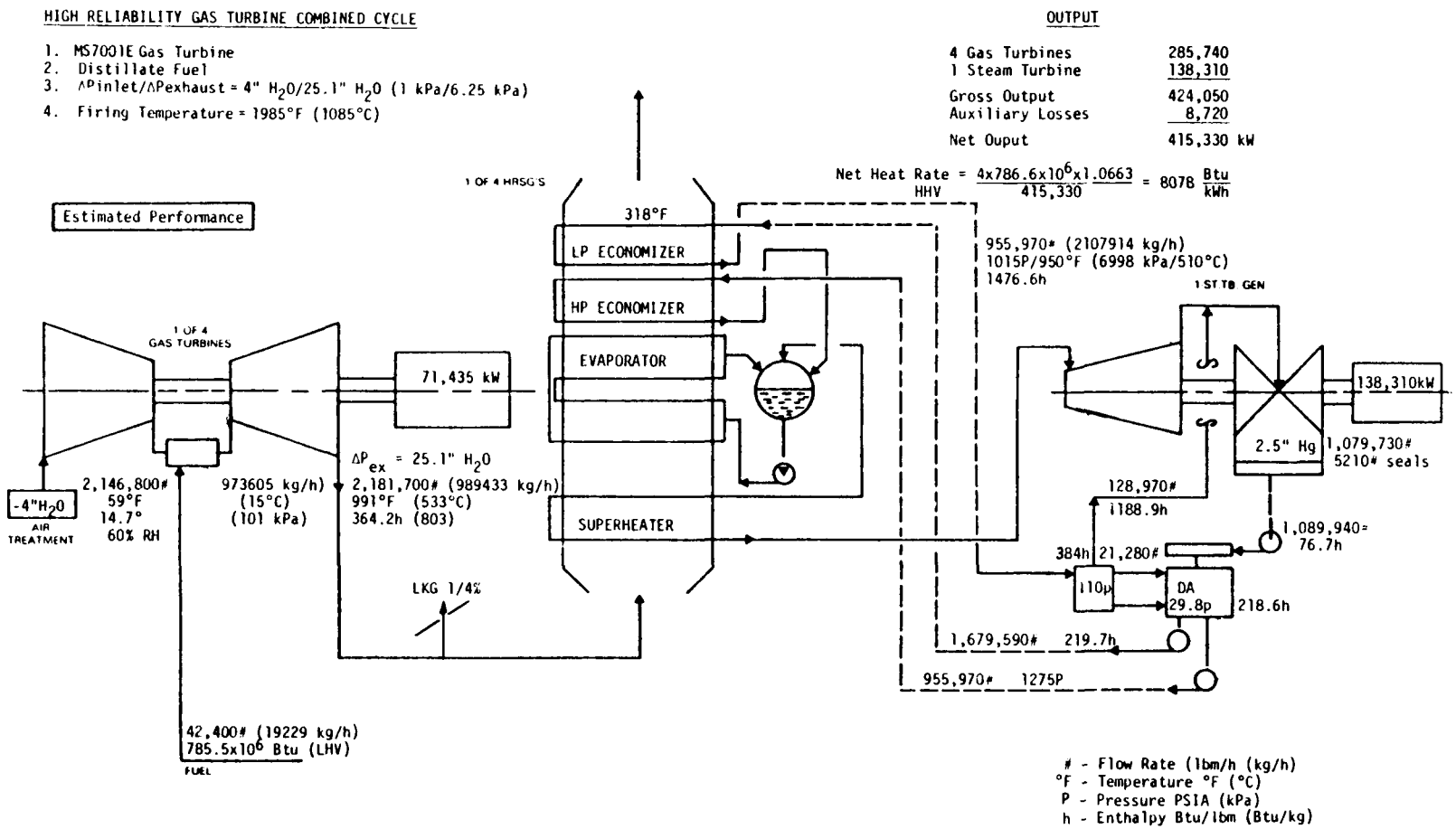

Figure 5.13: HRGTCC Plant Performance with Dry NOx Control and Distillate Fuel

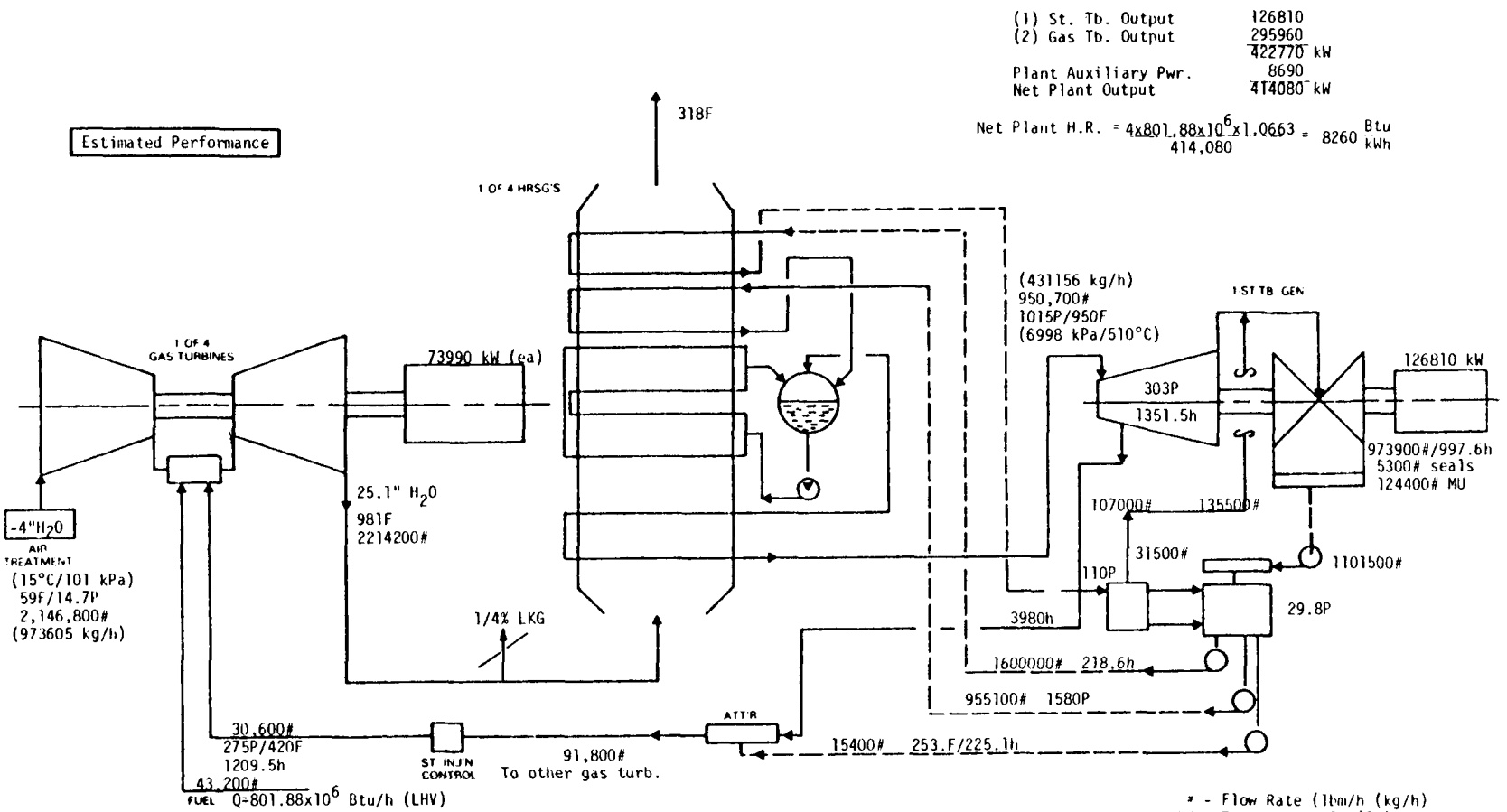

Figure 5.14: HRGTCC Plant Performance with Wet NOx Control and Distillate Fuel

In the following cycle studies for the coal-derived fuels, the Wet HRGTCC on distillate is the baseline system, and steam injection continues to be used where NOx suppression is applied in the gas turbine combustor. For consistency, performance comparisons are made to the Wet HRGTCC distillate fueled case. An improvement on the order of that shown in Table 5.11 for the distillate case can be expected in all the steam injected CDF cycles if a dry low NOx combustor is used.

2. Performance on Medium Cut CDL

The overall estimated plant performance on the medium cut CDL is presented in Figure 5.15, indicating a net plant output of 411,450 kW and a net plant heat rate of 8233 Btu/kWh. This is 27 Btu/kWh, or about 0.3%, better than the baseline Wet HRGTCC plant heat rate. Factors influencing the estimated performance of this system vs. the baseline are summarized in columns 3 and 1 respectively of Table 5.12. Note that the inherently lower HHV:LHV ratio introduces about 0.7 percent improvement (Item 4). About half of this is offset by the effects of steam injection for NOx control.

The total auxiliary power of 8960 kW includes the following:

	kW
• Boiler Feed Pump	1990
• Condensate Pump	60
• Auxiliary Power for 4-HRSG's including:	1320
- Circulating Pumps	
- Seal Air Fan	
- Scavenging Air Flow	
- Control & Instrumentation	
• Steam Turbine Auxiliaries	50
• Circulating Water Pump	2160
• Evaporative Cooling Tower Fan	860
• Miscellaneous Plant Auxiliaries	2520
	8960

Table 5.11

Preliminary Performance Comparison

	HRGTCC WET NOx CONTROL	HRGTCC DRY NOx CONTROL
1. GAS TURBINE		
1.1 Compressor Flow, lb/h (kg/h)	2,146,800 (4732884)	2,146,800 (4732884)
1.2 $\Delta P_i/\Delta P_x$ (H_2O)	4/25.1	4/25.1
1.3 Output (4 Units, kW)	295,960	285,740
1.4 Specific Work, kW Sec/lb (kW Sec/kg)	---	119.79 (264.09)
1.5 NOx Control (St. Injection/Air)	.0144	0
1.6 Heat per Gas Turbine (LHV) (Btu/kg)	801.88×10^6	786.6×10^6
2. STEAM TURBINE		
2.1 St. Conds. PSIG/F/"HgAbs (MPa/°C/kPa)	1000/950/2.5 (6.9/510/8.47)	1000/950/2.5 (6.9/510/8.47)
2.2 Throttle Flow Lb/h (kg/h)	950,700 (431230)	955,970 (433621)
2.3 St. Admission Lb/h (kg/h)	135,500 (61462	128,970 (58500)
2.4 St. Tb. Output (kW)	126,810	138,310
2.5 Stack Temp. °F (°C)	318 (159)	318 (159)
3. PLANT PERFORMANCE		
3.1 Gas Tb. & St. Tb. Gen (1.3 & 2.4)(kW)	422,770	424,050 kW
3.2 Aux. Pwr. (kW)	8,690	8,720 kW
3.3 Net Plant kW	414,080	415,330 kW
3.4 HHV:LHV	1.0663	1.0663
3.5 Net Plant H.R. (HHV)	8,260	8,078
3.6 Δ Net Plant H.R. (Btu/%)	172/+2.13	BASE

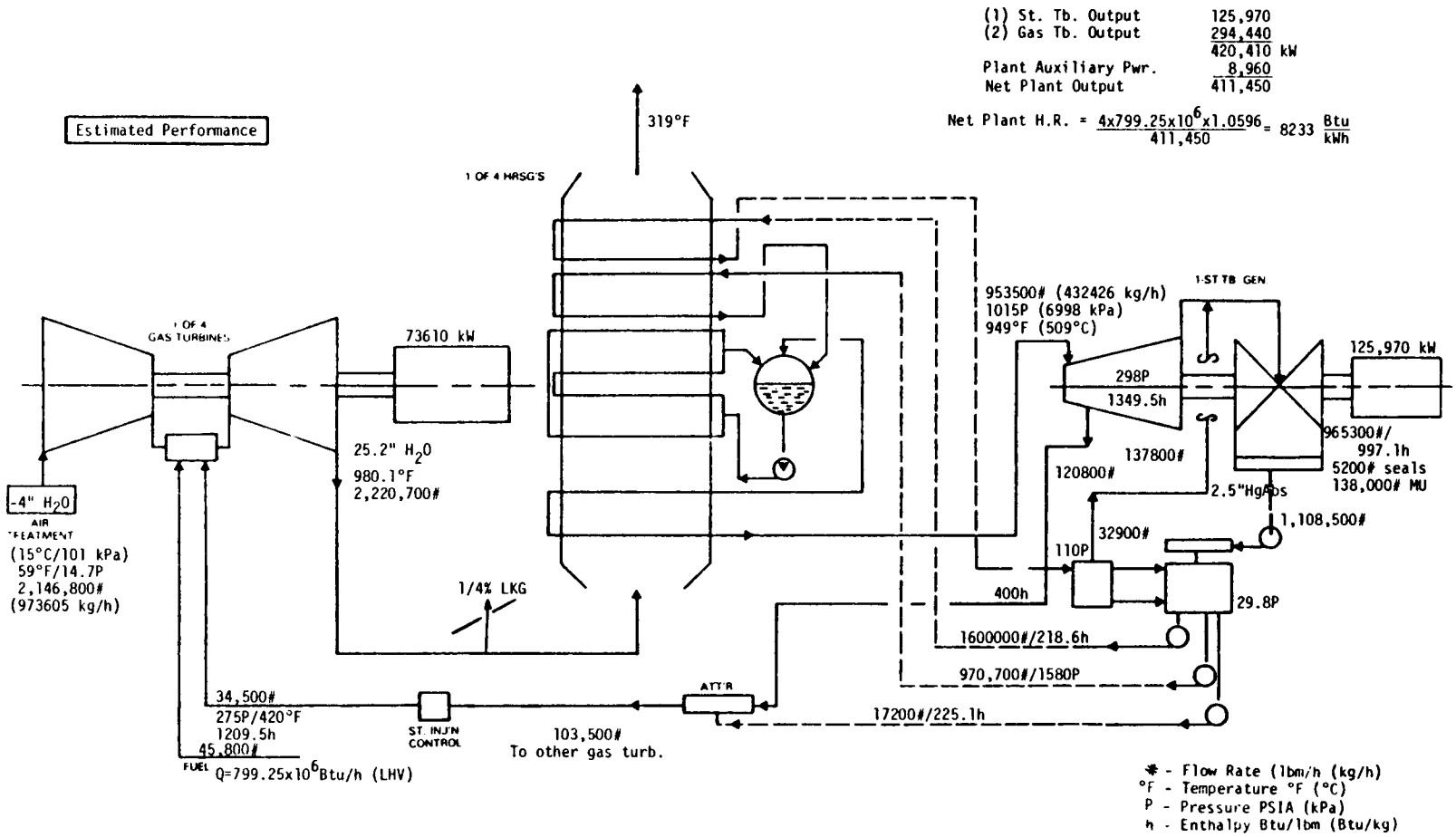

Figure 5.15: HRGTCC Plant Performance with Wet NOx Control and Medium Cut CDL

Table 5.12

STAG Plant Performance Reconciliation - Non-Integrated Plants

FUEL	NO. 2 DIST.	RESIDUAL	CDL MED. CUT	CDL HEAVY CUT	METHANOL	INT. BTU GAS
1.0 FIRING TEMP °F (°C)	1985 (1085)	1850 (1010)	1985 (1085)	1850 (1010)	1985 (1085)	1985 (1085)
1.1 %Δ (NET H.R.)	BASE	+3.8	0	+3.80	0	0
2.0 HHV: LHV	1.0663	1.0691	1.0596	1.0511	1.1389	1.0678
2.1 %Δ (NET H.R.)	BASE	+0.3	-0.65	-1.40	+6.80	+.10
3.0 STEAM: AIR	.0144	.0140	.0162	0	.0028	.0152
3.1 %Δ (NET H.R.)	BASE	-0.05	+0.35	-3.34	-2.32	--
4.0 FUEL: GAS TB. FLOW	.0195	.0178	.0206	.0194	.0435	.0698
4.1 %Δ (NET H.R.)	BASE	+.03	-0.03	0	-0.33	-.91
5.0 Σ%Δ H.R.	BASE	+4.08	-0.33	-0.94	+4.15	-0.81
6.0 NET PLANT H.R. (HHV) (Btu/kWh)	8260	8597	8233	8182	8603	8193

3. Performance on Heavy Cut CDL

The schematic diagram and estimated heat and mass balance data for operation on heavy cut CDL are shown in Figure 5.16. For this case, the firing temperature is shown to be cut back to 1850°F (1010°C) to reduce ash deposition effects. Also, due to the high fuel-bound nitrogen content in the heavy cut CDL, NOx control is by catalytic denitrification in the HRSG, eliminating the need for steam injection in the gas turbine combustor.

The net effect of operation at the indicated firing temperature of 1850°F (1010°C) and without steam injection is a 15.2 percent drop in gas turbine output, and a 15.3 percent drop in steam turbine output; the overall plant output of 359060 kW is a reduction of 13.3 percent from the Baseline case. However, the net plant heat rate of 8182 Btu/kWh is actually 78 Btu/kWh, or 0.9 percent, better than for the Baseline. A summary of the factors resulting in this estimated overall improvement is shown in columns 4 and 1 of Table 5.12 for heavy cut CDL and #2 distillate-fueled systems respectively. Note that the 3.8 percent loss in overall plant performance due to the lower firing temperature is offset by the combined effects of lower HHV:LHV ratio (1.4 percent) and the elimination of steam injection for NOx control (3.3 percent).

The total auxiliary power of 8450 kW includes the following:

	kW
• Boiler Feed Pump	1700
• Condensate Pump	60
• Auxiliary Power for 4-HRSG's	1320
• Steam Turbine Auxiliaries	50
• Circulating Water Pump	2180
• Evaporative Cooling Tower Fan	870
• Miscellaneous Plant Auxiliaries	2270
	8450

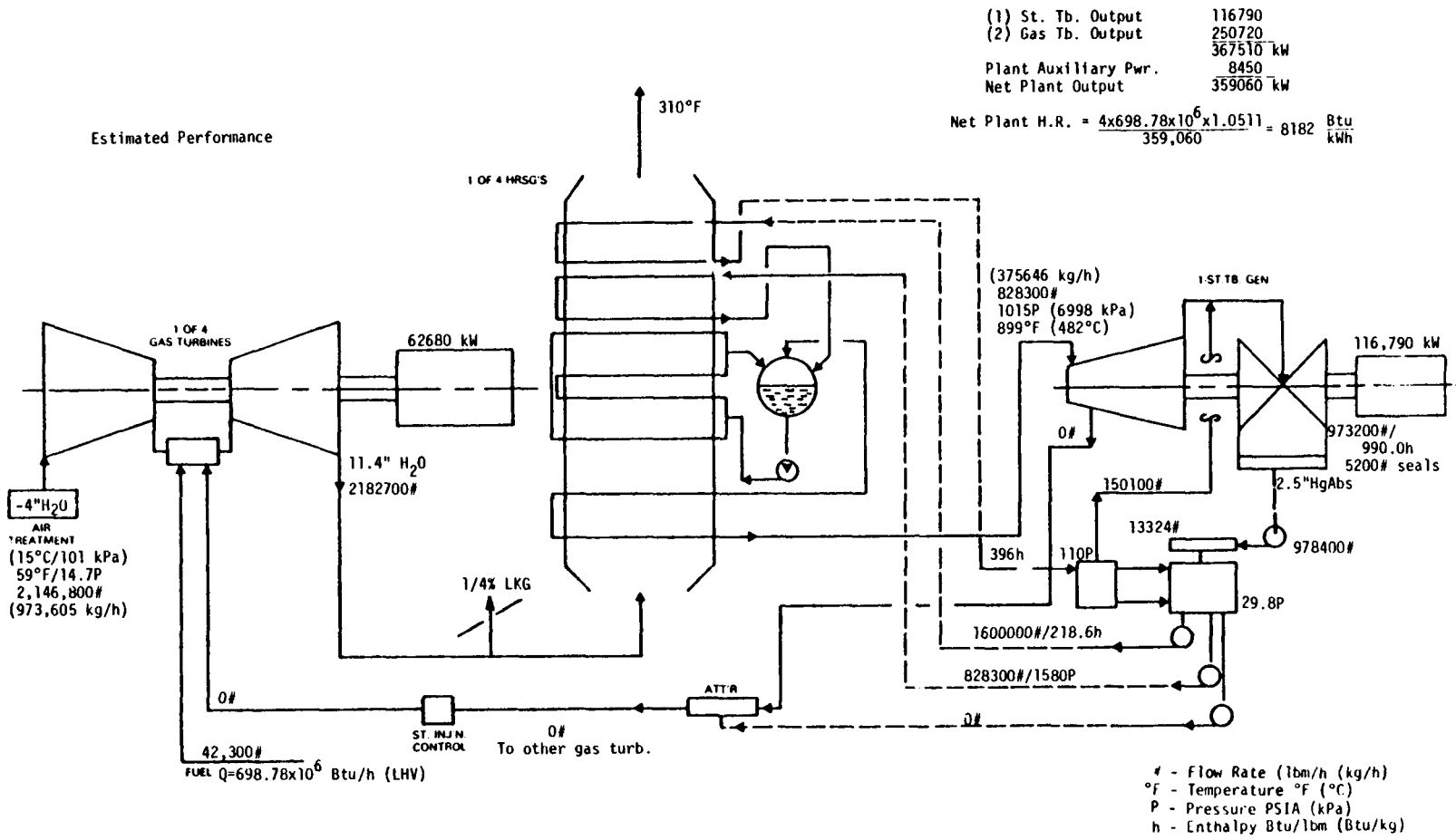

Figure 5.16: HRGTCC Plant Performance with Wet NOx Control and Heavy Cut CDL

4. Estimated Plant Performance on Methanol

The gas turbine will be capable of dual fuel operation on both the #2 distillate and methanol fuels. Startup and shutdown will be on #2 distillate.

The cycle is essentially unchanged relative to that for the Baseline system except for the effects of eliminating almost all of the steam for NOx control, reflecting the low adiabatic temperature associated with methanol combustion. There is also a small effect due to the relatively high fuel to air ratio associated with methanol.

Estimated heat and mass balance data for operation on methanol are shown on Figure 5.17.

As indicated on Figure 5.17, the net plant output is 443,180 kW, and the net heat rate is 8603 Btu/kWh, about 4.2 percent poorer than the Baseline system. Data on Table 5.12 summarizes the factors contributing to this relative estimated performance. Note that the HHV to LHV ratio is 13.9 percent greater, but is somewhat offset by the combined effects of very low steam injection requirements, lines 3.0 and 3.1, and high fuel mass flow, lines 4.0 and 4.1.

The total auxiliary power of 9480 kW includes the following:

	kW
• Boiler Feed Pump	1720
• Condensing Pump	150
• Auxiliary Power for 4-HRSG's	1320
• Steam Turbine Auxiliaries	50
• Circulating Water Pump	2480
• Evaporative Cooling Tower Fan	990
• Miscellaneous Plant Auxiliaries	2770
	9480

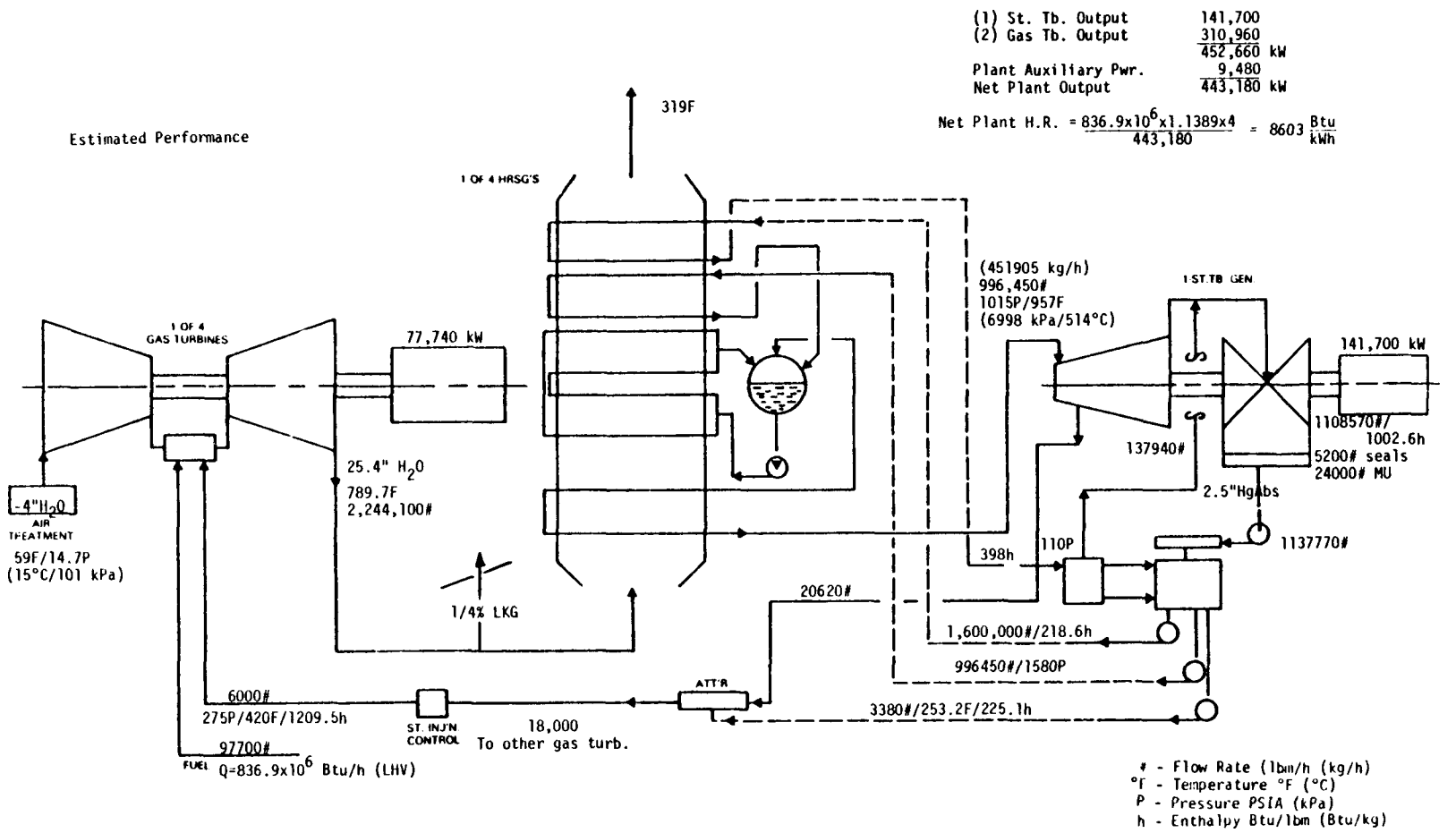

Figure 5.17: HRGTCC Plant Performance with Wet NOx Control and Methanol Fuel

5. Performance on Intermediate Btu Coal Gas From a Free Standing Plant

This Intermediate or medium Btu (MBTU) gas is considered to be as received from a totally independent source, without any requirements for auxiliary power, steam or water, from the STAG plant.

The gas turbine will be capable of dual fuel operation on both #2 distillate and MBtu gas fuels.

Estimated heat and mass balance data for operation on MBtu gas are shown on Figure 5.18.

The net plant output of 441,780 kW is 6.7 percent greater and the net plant heat rate 0.8 percent better than for the Baseline system reflecting the mass flow of the MBtu gas. A summary of the factors affecting the performance of this system is shown in column 6, Table 5.12. Note that the effects of the increased mass flow in the gas turbine, lines 4.0 and 4.1 offset the loss due to a higher HHV to LHV ratio.

The total auxiliary power of 9190 kW includes the following:

	kW
• Boiler Feed Pump	1900
• Condensate Pump	110
• Auxiliary Power for 4-HRSG's	1320
• Steam Turbine Auxiliaries	50
• Circulating Water Pump	2250
• Evaporative Cooling Tower Fan	890
• Miscellaneous Plant Auxiliaries	2670
	9190

6. Performance for Integrated Gasifier/Combined-Cycle Systems - General

Reconciliation of performance to the baseline system cannot be estimated for the integrated systems in the format of Table 5.12.

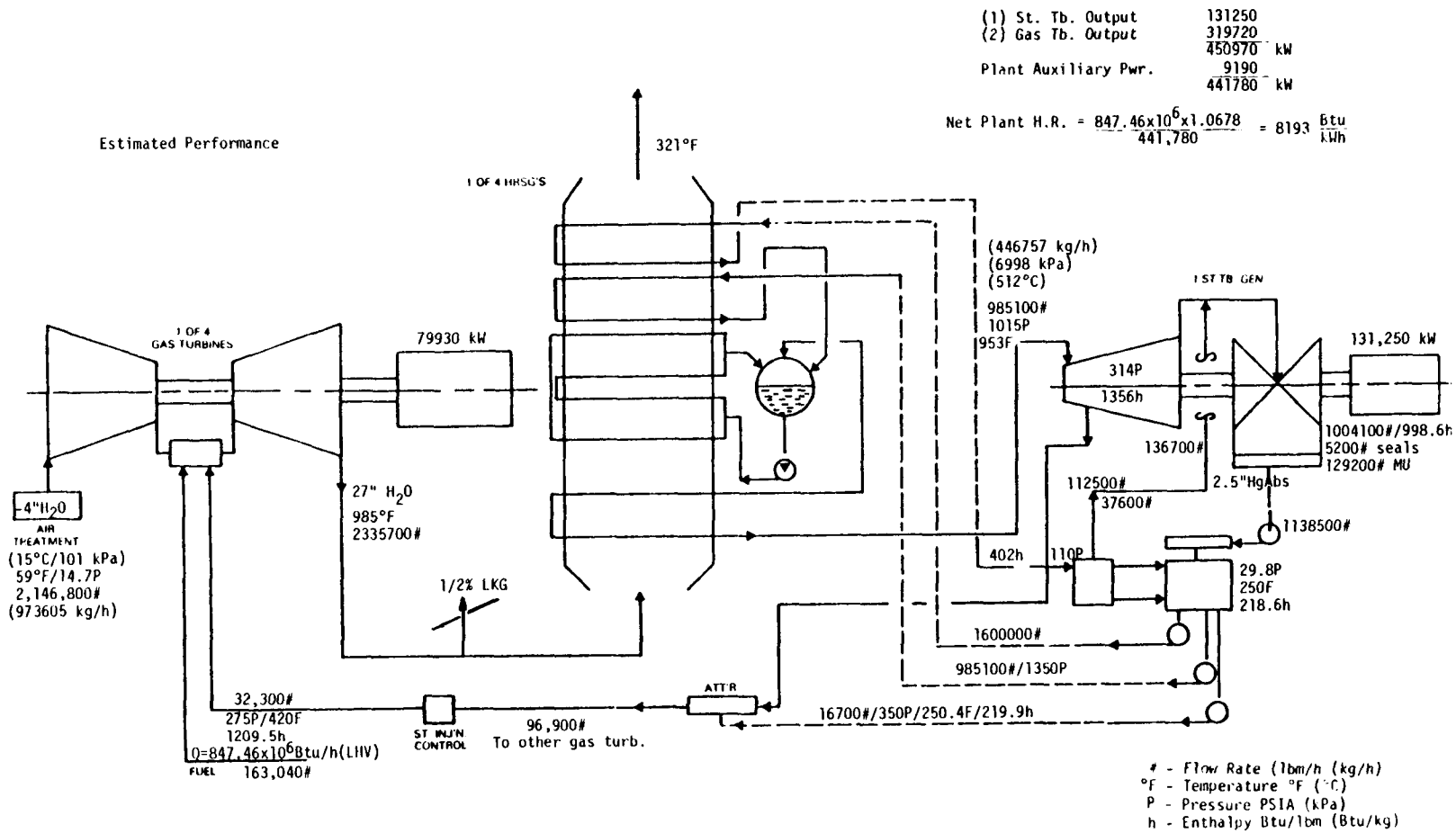

Figure 5.18: HRGTCC Plant Performance with Wet NOx Control and MBtu Gas from a Free Standing Fuel Plant

The overall plant performance for integrated gasification system-combined-cycle systems is a function of the interaction of several major subsystems which, on an individual basis, are not indicative of the excellence of the system. Consequently, it is desirable to establish the "common denominators" of these systems in order to make more meaningful comparisons and assessments of the systems and to assist in the development of more efficient systems.

The approach used in the integrated systems is as follows:

1. Use of an estimated combined cycle defined schematically as the "Power Plant" in Figures 5.19, 5.20, and 5.21; wherein the Gross output is:

   - kW Generation of Gas & Steam Turbine
   - kW equivalent of driver shaft horse power and the heat input is:
   - Q_{CH} = Chemical heat in fuel
   - Q_{SF} = Sensible heat in fuel gas
   - Q_S = Latent and Sensible heat in steam from fuel plant
   - Q_{CU} = Heat from cleanup system to condensate system of power plant (or equivalent)
   - Q_{LF} = Latent heat in fuel gas and the heat output is:
   - Q_{SP} = Latent and sensible heat in steam to gasification system
   - Q_O = Sensible heat in oxygen to process
   - Q_A = Sensible heat in air to process

Then, the Gross Heat Rate of the power plant is

$$GHR = \frac{Q_{CH} + Q_{SF} + Q_{LF} + Q_S + Q_{CU} - (Q_{SP} + Q_O + Q_A)}{\text{Generation kW} + \text{Driver kW}} \qquad \text{eq. 1}$$

Estimated Performance

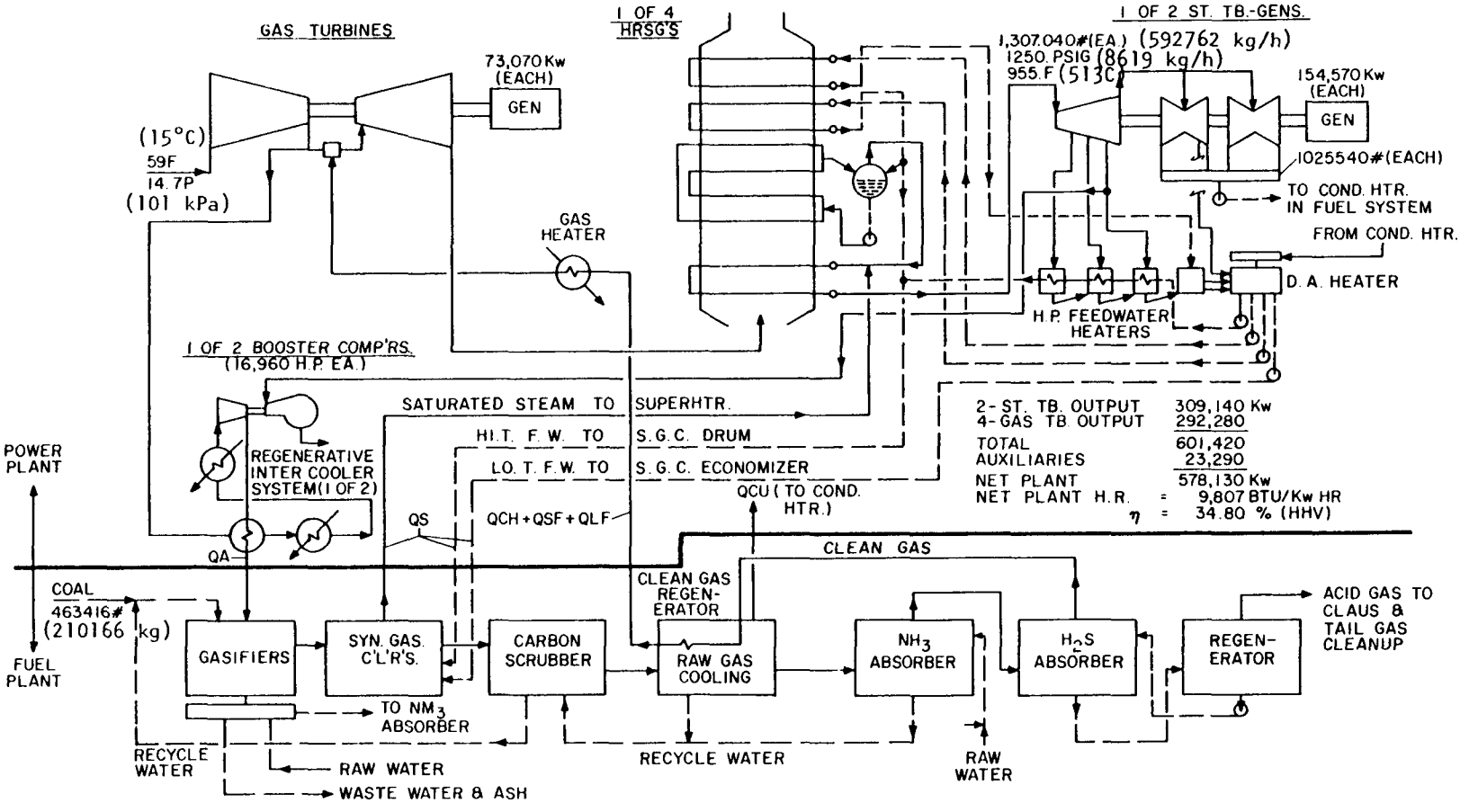

Figure 5.19: Integrated Air Blown Entrained Flow-CC

Estimated Performance

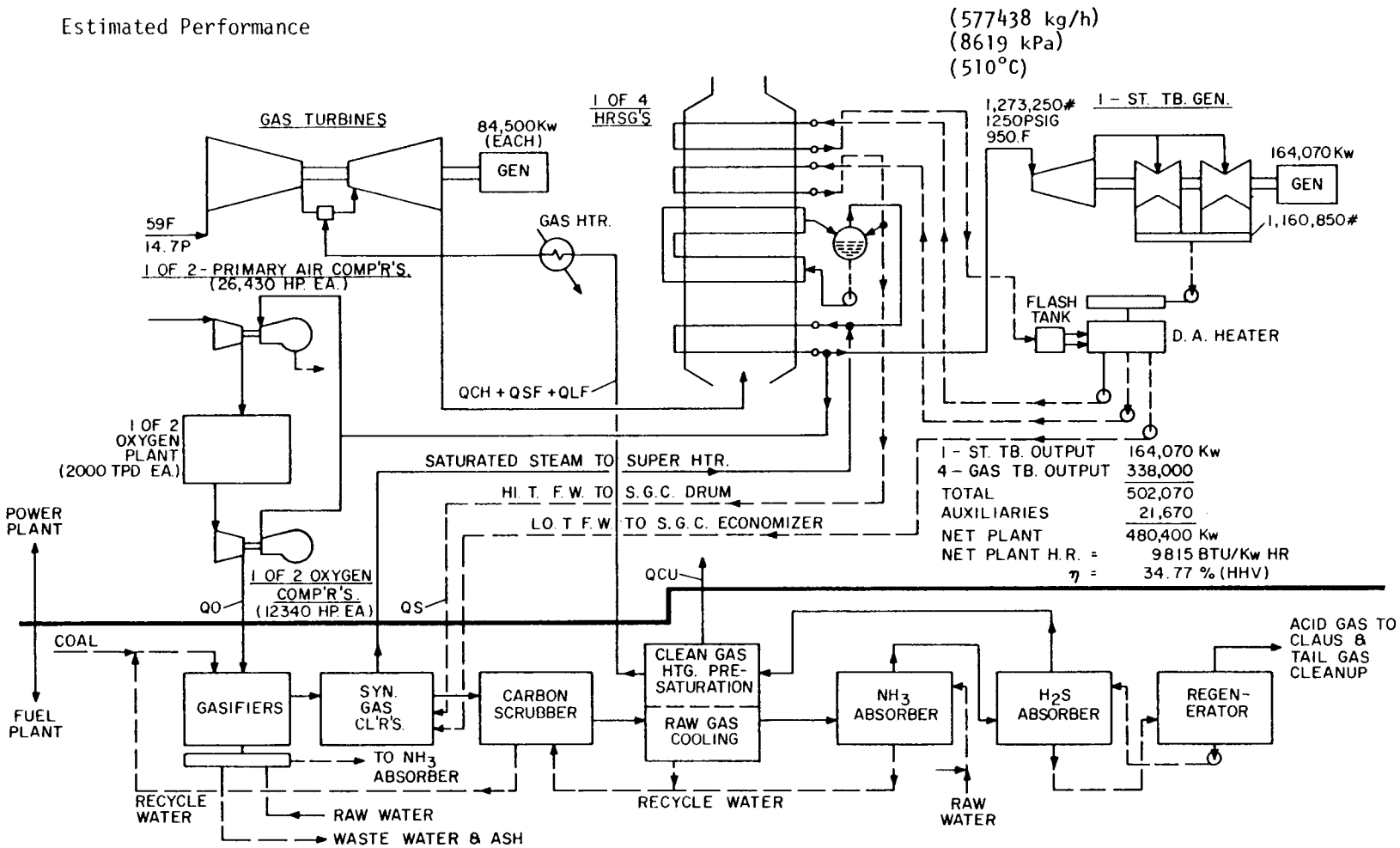

Figure 5.20: Integrated O_2 Blown Entrained Flow-CC

Estimated Performance

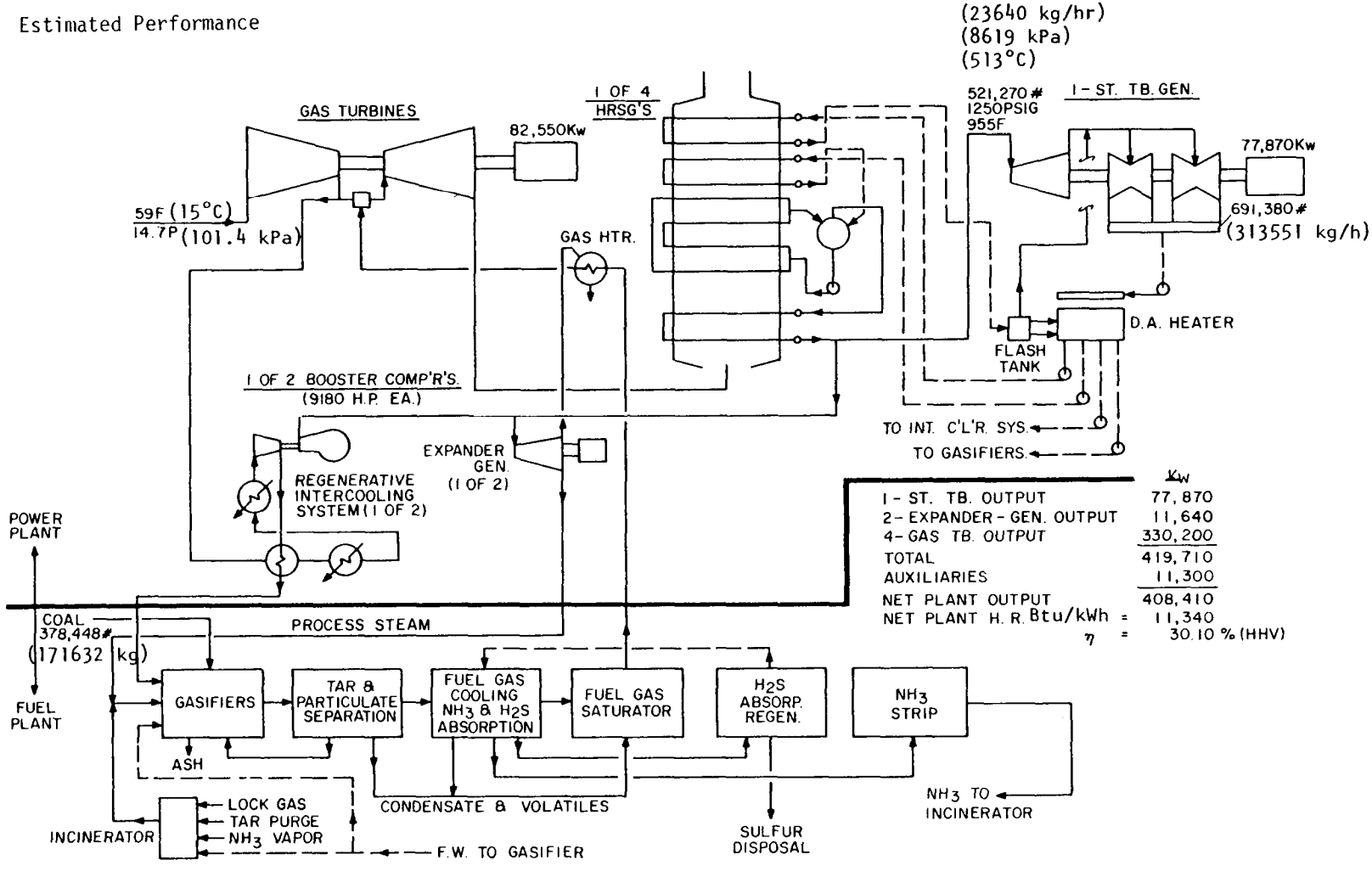

	KW
1-ST. TB. OUTPUT	77,870
2-EXPANDER-GEN. OUTPUT	11,640
4-GAS TB. OUTPUT	330,200
TOTAL	419,710
AUXILIARIES	11,300
NET PLANT OUTPUT	408,410
NET PLANT H.R. Btu/kWh =	11,340
η =	30.10 % (HHV)

Figure 5.21: Integrated Air Blown Fixed Bed - Gasification System - CC

Note that the GHR receives full credit for the export of the sensible heat in either air (Q_A) or oxygen (Q_O) so that the absolute level of performance is properly comparable with that of the Baseline conventional STAG systems, (i.e., not deducting the BOP auxiliary power).

Now, however, since the GHR, Eq. 1, is based on the net heat from the gasification system, the actual gasifier efficiency cannot be directly applied to relate performance to the coal pile heat input. This impass is handled in the next step.

2. The actual gasification system efficiency, N_{GA}, is first established on the basis of the gasification system's gross heat output, EQN. 2, and then modified to the same net heat output basis as the Power Plant GHR and the heat from the coal pile in order to facilitate a direct conversion from "Power Plant" heat rate to coal pile heat rate, EQN. 3.

$$N_{GA} = \frac{Q_{CH} + Q_{SF} + Q_{LF} + Q_S + Q_{CU}}{Q_C + Q_{SP} + Q_A + Q_O} \qquad \text{eq. 2}$$

where:

N_{GA} = Actual efficiency of gasification system

Q_C = Heat from coal pile (HHV)

$$N_{GCP} = \frac{Q_{CH} + Q_{SF} + Q_{LF} + Q_S + Q_{CU} - (Q_{SP} + Q_A + Q_O)}{G}$$

$$N_{GCP} = N_{GA} - (1-N_{GA}) \times \frac{Q_{SP} + Q_A + Q_O}{Q_C} \qquad \text{eq. 3}$$

3. The auxiliary power requirements for the gasification system and the Power Plant are accummulated separately to permit the determination of the effects of both classes.

Table 5.13 summarizes and uses the various data in the manner described above. For reference, the estimated Gross Heat Rate (GHR) of the Baseline system on #2 distillate, i.e., without penalty for auxiliary power requirements, is 8090 Btu/kWh.

Table 5.13

Integrated Coal Gasification System-Combined Cycle
Performance Factors & Overall Plant Performance Summary

	ENTRAINED BED		FIXED BED
	(IAE-CC) AIR BLOWN	(IOE-CC) OXYGEN BLOWN	(IAF-CC) AIR BLOWN
1.0 Q TO POWER PLANT (10^6 BTU/HR)			
1.1 $Q_{CH} + Q_{SF} + Q_{LF}$	3557.6	3933.0	4236.9
1.2 Q_S	1738.6	646.1	--
1.3 Q_{CU}	183.7	20.4	--
1.4 Q_{SP}	--	--	486.5
1.5 Q_O	--	17.1	--
1.6 Q_A	265.0	--	107.3
1.7 Σ Q TO POWER PLANT L1.1+L1.2+L1.3-(L1.4+L1.5+L1.6)	5214.9	4582.4	3643.1
2.0 POWER PLANT OUTPUT			
2.1 GAS TB. kW	292,280	338,000	330,200
2.2 ST. TB. GEN. kW	309,140	164,070	77,870
2.3 HOUSE GEN. SET kW	--	--	11,640
2.4 BOOSTER COM'R kW	25,300	--	13,700
2.5 O_2 PLANT PRIM. A.C.	--	39,440	--
2.6 O_2 PLANT OXYGEN COMP.	--	18,410	--
2.7 Σ POWER PLANT	626,720	559,920	433,410
2.8 POWER PLANT G.H.R. L1.7 ÷ L2.7	8321	8184	8406
3.0 GASIFIER PERFORMANCE			
3.1 η_{GA} (BASED ON GROSS GASIFIER Q OUT)	0.9233	0.9719	0.8110
3.2 η_{GCP} (BASED ON NET GASIFIER Q OUT)	0.9197	0.9817	0.7868
4.0 AUXILIARY POWER			
4.1 GASIFICATION SYSTEM kW (NOT INCLUDING DRIVERS)	10280	11340	3940
4.2 TOTAL GASIFICATION SYSTEM kW (L2.4+L2.5+L2.6+L4.1)	35580	69190	17640
4.3 TOTAL POWER PLANT AUX. kW	13010	10330	7360
4.4 NET PLANT OUTPUT L2.8-L4.2-L4.3	578,130	480,400	408,410
4.5 NET PLANT HEAT RATE (L1.7 ÷ L3.2) ÷ L4.4	9807	9815	11337

7. Performance for Integrated Air-Blown Entrained Flow Blown Entrained Flow Gasifier System

Figure 5.19 shows estimated heat and mass balance data for operation with an integrated air-blown entrained flow gasifier plant. As will be discussed in Section 5.2.4, the plant will use two steam turbine generators to absorb the high steam making capability of this system. Steam conditions are 1250 psig (8.619 MPa), 950°F (510°C) (vs 1000 psig (6.895 MPa), 950°F (510°C) for the non-integrated systems).

Referring to Table 5.13, line 2.8 shows the estimated power plant GHR to be 8321 Btu/kWh, or a 2.9 percent degradation of the "power system" heat rate from the 8090 Btu/kWh GHR of the baseline case. This reflects the very high quantity of heat input to the "power system" (or equivalent STAG system) by the gasifier, and the consequential degradation. The need for regenerative high temperature feedwater heating is an "index" that the supplementary heat contributed to the power system is excessive i.e., acting to degrade overall plant performance. Fundamentally, the addition of heat to the steam system without the need for feedwater heating is an indication that the actual chargeable heat to the system is in the evaporation and superheating range; feedwater heating to the steaming point would be by the exhaust gas in the HRSG's high temperature economizers. On this basis, the heat rate of an incremental kW is only about 7000 Btu/kWh at the 1250 psig/950°F (8.619 MPa/510°C) conditions. The continued addition of steam past the point where regenerative feedwater heating would initially be required, results in incremental steam turbine kW at a heat rate of about 10000 Btu/kWh. It is estimated that the GHR of the Power Plant is about 200/Btu/kWh higher due to this effect.

Another area of loss is the relatively poor efficiency for the small booster compressor drives.

The major factors in going from the power plant to the overall estimated plant performance include:

- the gasification system heat, chemical and fluid losses
- the oxident compression power

- other fuel plant auxiliaries
- power plant auxiliaries

The gasification system efficiency, N_{GA}, line 3.1 of Table 5.13 indicates associated losses of about 7.7 percent or about 700 Btu/kWh. In the same manner, losses associated with the above mentioned factors have been derived and summarized on Figure 5.22. Only the loss indicated by power plant auxiliary power has an equivalent area of loss in the baseline system.

Auxiliary power requirements associated with the fuel plant, line 4.2, include the following:

	kW
• Booster Air Compressors	25300
• Synthetic Gas Cooler Feedwater Pumps	4640
• Steam Turbine Driver	
- Condensate Pump	30
- Circulating Water Pumps	840
- Cooling Tower Fans	340
• Coal Crushers	1110
• Miscellaneous Fuel Plant Auxiliaries	3320
	35580

Auxiliary power requirements associated with the power plant itself, line 4.3, include the following:

	kW
• Boiler Feed Pump	420
• Condensate Pumps	120
• HRSG Power	1320
• Steam Turbine Auxiliaries	100
• Circulating Water Pumps	4450
• Fan Power	1780
• Miscellaneous Plant Auxiliaries	4820
	13010

8. Performance for Integrated Oxygen-Blown Entrained Flow Gasifier System

Figure 5.20 gives the estimated heat and mass balance data for operation with an integrated, oxygen blown, entrained flow gasifier system. Integration of the power and fuel plants is effected through the steam system and oxygen plant. Atmospheric air is compressed by a steam turbine driven compressor to serve the oxygen plant, and the oxygen product is re-compressed by the steam turbine driven oxygen compressors for transmission to the gasifiers. The Synethic Gas Coolers of the gas plant produce saturated steam, as in the previous case, which is delivered to the power plant's HRSG drums.

Referring to Table 5.13, line 2.8, column 2, it is seen that this system's estimated power plant GHR is poorer than the baseline system by 94 Btu/kWh, or 1.2.percent The primary factor causing this loss is the relatively low levels of efficiency associated with the small condensing steam turbine drivers for the oxygen plant's primary air compressors and oxygen compressors. It is interesting to note that the total economizer and evaporator-steaming capability for this system is very well matched; no supplementary regenerative feedwater heating by steam turbine extraction is required. This contrasts to the integrated air blown system where a significant amount of high temperature regenerative feedwater heating is required, and is the primary reason for the oxygen blown system's 137 Btu/kWh better plant heat rate.

As in the other integrated systems, the major factors in going from the power plant to the overall plant performance includes:

- the gasification systems heat, chemical and fluid losses
- the oxident compression power
- other fuel plant auxiliaries
- power plant auxiliaries

The gasification system efficiency (N_{GCP}), column 2, line 3.2 of Table 5.13, indicates associated losses of about 2.8 percent or about 240 Btu/kWh. This contrasts with the 7.7 percent loss for the integrated air blown entrained flow system; the rates of losses are approximately

equal to the ratios of this clean fuel gas weight rates, reflecting similar types of heat loss per pound of fuel flow.

In the same manner, losses associated with the aforementioned factors have been derived and are summarized on Figure 5.22. Only the loss indicated by power plant auxiliary power has an equivalent area of loss in the baseline system.

It is interesting to note that, in comparing the integrated oxygen-blown and air-blown system efficiencies, the oxygen-blown system's better gasification efficiency combined with its better power plant efficiency just about balances off the significantly higher power requirements for oxident compression.

Auxiliary power requirements associated with the fuel plant, line 4.2 include the following:

	kW
• Oxygen plant primary air compressor	39440
• Oxygen plant oxygen compressor	18410
• Coal crusher	920
• Steam Turbine Driver	
- Condensate Pumps	70
- Circulating Water Pumps	1050
- Cooling Tower Fans	420
• Oxygen plant heat Revaporization	4120
• Synthetic Gas Cooler Feedwater Pumps	2000
• Miscellaneous Fuel Plant	2760
	69190

Auxiliary power requirements associated with the power plant itself, line 4.3, include the following:

	kW
• Boiler feed pumps	1820
• Raw Gas Cooler Pump	140
• Condensate Pumps	110

• HRSG	1320
• Steam Turbine	50
• Circulating Water Pumps	2560
• Cooling Tower Fans	1030
• Coal Crushers	920
• Miscellaneous Plant Auxiliaries	2380
	10330

9. Performance for Integrated Air-Blown Fixed Bed Gasification System

The air-blown fixed-bed gasification system is characterized by a raw gas that is at relatively low temperature and contains an extremely high level of particulates. Consequently, the raw gas is initially water scrubbed to eliminate the possibility of any significant level of sensible heat in the final clean product gas. This is in sharp contrast to the entrained flow gasifier systems where the steam that is normally generated in Baseline STAG systems is increased by about 180 percent and 80 percent respectively, due to the high level of sensible heat in the fuel gas. However, in spite of the relatively low level of steam generation, the need for approximately 35 percent of the total steam generation for use in the gasification process at about 430 psia (2.965 MPa), still requires that the best possible steam conditions be used for the highest overall plant efficiency. Therefore, in designing a baseload distillate fired system for later retrofit to an air-blown fixed bed gas supply, it is mandatory that, with reasonable modifications, the original steam system be compatible with these conditions. The latter constraint is important for near term application and dictates non-reheat state-of-the-art steam conditions.

Figure 5.21 shows the estimated heat and mass balance with the integrated air-blown, fixed-bed gasification system.

Condensing steam turbine drivers are utilized for the two booster air compressors, and two non-condensing steam expander-generator sets are utilized to furnish process steam to the gasifiers. Consideration was given to using non-condensing drivers for the booster air compressors, but rejected because of the inherent conflict in the controlability of

furnishing both air and steam. Almost 50 percent of the total high pressure steam is required for the four small steam turbines. This factor, in addition to the effect of operating the main turbine at about 40 percent of fuel capacity, significantly degrades the steam turbine and overall plant performance.

Process air, as in the integrated air-blown entrained flow system, is obtained from the gas turbine compressor discharges and is regeneratively precooled before being further compressed. Note that three stages of precooling are used in order to recover and utilize the heat at the highest efficiency. Heat from the first stage is utilized in the gasification system; second stage heat furnishes low level feed water heating plus some low pressure admission steam to the turbine.

Referring to Table 5.13, column 3, line 2.8, it is seen that this system's power plant GHR of 8406 Btu/kWh is 316 Btu/kWh or 3.9 percent poorer than the GHR for the Baseline system. The primary factor causing this loss is the very low steam turbine efficiency associated with the small condensing booster compressor drivers and the non-condensing turbine-generator sets. A similar but smaller effect is the poorer performance of the main steam turbine-generator due to partial load operation at about 40 percent capacity.

The major factors in going from the power plant to the overall plant performance include:

- the gasification system's heat, chemical and fluid losses
- the oxident compression power
- other fuel plant auxiliaries
- power plant auxiliaries

The gasification system, column 3, line 3.2 of Table 5.13, indicates associated losses of about 22 percent, or about 2300 Btu/kWh. The high loss due to the gasifier reflects the large quantity of process steam that is charged to the gasifier, Q_{SP} in line 1.4, and its relatively low conversion to chemical heat. In addition, the large amount of sensible heat in the raw gas cool down is only partially recovered, due to the inherent temperature differences in the system. Other significant areas

of loss which are unique to the fixed bed system are those associated with non-recoverable tar oils and lock hopper gases.

In the same manner, losses associated with the aforementioned factors have been derived and summarized on Figure 5.22. Only the loss due to power plant auxiliary power has an equivalent area of loss in the baseline system.

Auxiliary power requirements associated with the fuel plant, line 4.2 include the following:

	kW
• Booster Air Compressor	13700
• Steam Turbine Driver	
- Condensate Pumps	20
- Circulation Water Pumps	250
- Cooling Tower Fans	100
• Coal Crushers	900
• Gasifier Feed Water Pump	40
• Miscellaneous Fuel Plant Auxiliaries	2630
	17640

Auxiliary power requirements associated with te power plant itself, line 4.3, include the following:

	kW
• Boiler Feed Pumps	1970
• No. 1 Inter-cooling Pump	20
• Condensate Pumps	60
• HRSG Power	1320
• Steam Turbine Auxiliaries	50
• Circulating Water Pumps	1410
• Fan Power	560
• Miscellaneous Plant Auxiliaries	1970
	7360

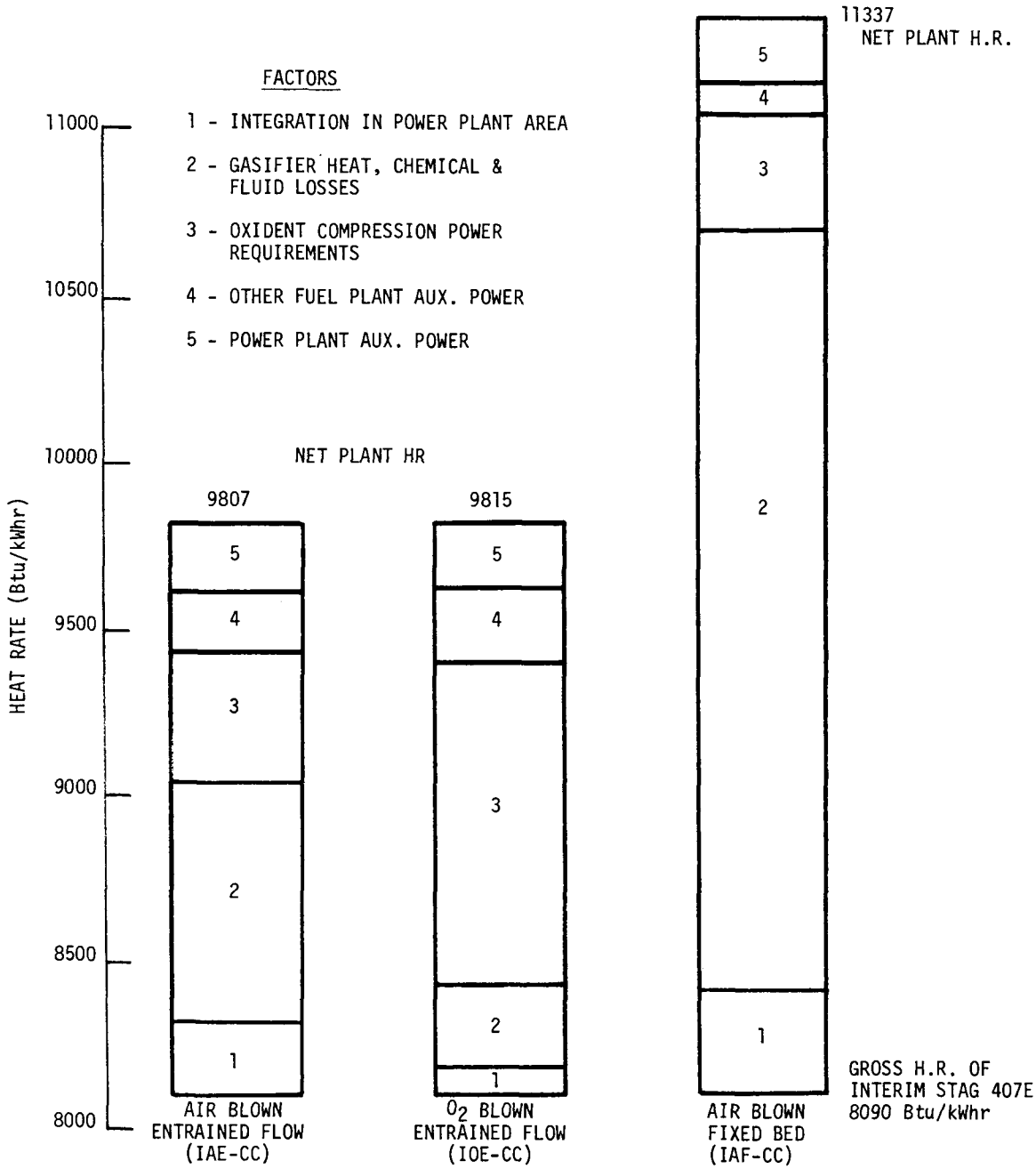

Figure 5.22: Effects of System Integration & Fuel Plant Loss Factors on Plant Performance

10. Plant Performance Summary

The estimated performance results of the previous sections are summarized in Table 5.14. In comparing heat rates, note that the integrated plants are rated on a coal pile to busbar basis. The non-integrated plants heat rate do not reflect losses associated with the coal-derived fuel conversion process.

5.2.4 Retrofit and Availability Consideration for Coal-Derived Fuels

At this time, it is not clear which of the coal-derived fuels will predominate in the future, but it will more than likely fall within the range of fuels discussed earlier in this section. Since ultimate retrofit to alternate fuels is mandated by the Fuel Use Act for base and mid-range loaded plants, the New Centerline Design must be designed with conversion to coal-derived fuels in mind. By anticipating the later modifications, subsequent roadblocks and design compromises can be avoided. The latter, by itself, can be a major contribution to reliability and availability of a plant running on coal-derived fuels.

The approach in the following discussion is to first review the impact of retrofit considerations on the Baseline plant design. Then, the retrofit modifications for specific representative gas and liquid coal-derived fuels will be reviewed, and provisions for maintaining availability discussed.

1. Baseline Design Considerations

Section 5.2.3 showed that, when operating on Coal-Derived Fuels, significant changes in electrical output of the gas and steam turbine generators would result (Table 5.14). This impacts not only those major items of equipment, but also the electrical switchyard and a number of auxiliary systems. In addition, major changes in steam generation and steam flows result when operating on CDF's, and these will impact not only the HRSG's and steam turbine, but also a number of auxiliary systems and components.

Table 5.14

Overall Plant Performance Summary

FUEL	BASE NO. 2 DIST.	CDL MED. CUT	CDL HEAVY CUT	METHANOL	CDG ENTRAINED FLOW OXYGEN BLOWN FREE STANDING	CDG ENTRAINED FLOW AIR BLOWN INTEGRATED (IAE-CC)	CDG ENTRAINED FLOW OXYGEN BLOWN INTEGRATED (IOE-CC)	CDG FIXED BED AIR BLOWN INTEGRATED (IAF-CC)
• GAS TURBINE FIRING TEMP °F (°C)	1985 (1085)	1985 (1085)	1850 (1010)	1985 (1085)				
• STEAM INJ'N.: AIR (IN COMBUSTOR)	0.0144	0.0162	--	0.0028	0.0152	--	0.0031	--
• STEAM CONDITIONS PSIG/°F/"HgAbs (MPa/°C/KPa)	1000/950/2-1/2 (6.895/510/8.5)	1000/949/2-1/2 (6.895/509/8.5)	1000/899/2-1/2 (6.895/482/8.5)	1000/957/2-1/2 (6.895/514/8.5)	1000/953/2-1/2 (6.895/512/8.5)	1250/950/2-1/2 (8.619/510/8.5)	1250/950/2-1/2 (8.619/510/8.5)	1250/955/2-1/2 (8.619/513/8.5)
• GAS TB. kW (1-UNIT) (4-UNITS)	73990 295960	73610 294440	62680 250720	77740 310960	79930 319720	73070 292280	84500 338000	82550 330200
• ST.TB. kW/No. OF UNITS	126810/1	125970/1	116790/1	141700/1	131250/1	309140/2	165060/1	77870/1 11640/2*
• TOTAL GENERATOR kW	422770	420410	367510	452660	450970	601420	502070	419710
• AUXILIARY kW	8690	8960	8450	9480	9190	23290	21670	11300
• NET PLANT OUTPUT (kW)	414080	411450	359060	443180	441780	578130	480400	408410
• NET PLANT H.R. (Btu/kWh)	8260	8233	8182	8603	8193	9807**	9815**	11340**
• NET PLANT η (HHV)	0.413	0.414	0.417	0.397	0.416	0.348	0.348	0.301

* EXPANDER SETS

** COAL PILE TO BUS-BAR

Some of these differences can be accommodated by later changes, but, for major items of equipment, the capability must be built in from the start. This is the approach taken in designing the Interim STAG and it is recommended as the procedure to follow in the High Reliability Baseline Design. Items to be considered include both equipment design and plant layout.

The following discussion draws heavily on the General Electric Interim STAG design effort which used the following procedure:

- For each of the CDF's, optimum overall plants were configured, but with certain over-riding constraints, as required, to assure state-of-the-art compliance.

- The functional specifications for the major components and subsystems for all of the plants were compared, and the dictating functional design criteria determined in these respective areas. (It should be recognized that, in carrying out Items 1 and 2, conceptual design and layout criteria for the various coal gas systems were derived from information in the public domain, principally in the EPRI reports (Ref. 19 and 20)).

- Alternative Interim STAG plant arrangements were developed with major components and subsystems which reflected the dictating functional design criteria.

- Alternative arrangements were tested for convertability and evaluated.

- With the preferred configuration, designs were developed for each of the seven plants, including engineering specifications, preliminary designs for major components, and final plant layouts.

a. Design Criteria

Design criteria used in the Interim STAG design are as follows:

Gas Turbine Design Criteria -

- A major objective is to recognize the baseload operational requirements of the plant in carrying out the design modifications, considering both redundancy and improved design criteria.

- Retention of the fundamental packaging approach, with factory-assembled, skid-mounted construction and associated outdoor lagging to permit slab-type installation. This is especially pertinent for new components and/or subsystems that will be required for conversions.

- Enclosures for gas turbine accessory systems where necessary to provide weather, thermal and acoustic insulation; these will be readily removable, in sections, for ease of maintenance.

- An automatic control system that will permit the machine to be started, synchronized, and loaded on #2 distillate. As appropriate, the control system in design and installation will anticipate the new interfacing and functional criteria that will be required for conversion.

Steam Plant Design Criteria -

- The steam turbine generator and its associated accessories and balance of plant components will be located in a steam turbine building.

- Special provisions that are required for operation in the converted mode will be recognized and considered in design, construction and installation, as required.

- The heat recovery steam generators will be designed for and installed outdoors.

b. Design Basis

Gas Turbine Design Basis

With the above criteria to consider, gas turbine provisions for retrofit should include sizing of the generator and mechanical components to handle gas turbine loads for the worst case expected on the coal-derived fuels. Table 5.14 shows this to be the integrated, oxygen-blown entrained-flow case, where gas turbine output is 84.5 MW. This should be reflected in all electrical equipment associated with the gas turbine, as well as the turbine components themselves and the load coupling. If a slight decrease in firing temperature for operation on coal-derived gases is not to be tolerated, an improved turbine bucket alloy should be used. Also, for operation on CDL's, consideration should be given to vacuum plasma sprayed coatings for added bucket protection.

Probably the worst on-base modifications anticipated for CDF fuels are associated with the air-blown entrained flow system, where provision must be made for the very large fuel gas and air extraction piping typified by Figures 5.2, 5.6, 5.10 and 5.11. Consideration of this impact should be made in designing the piping and components for the baseline machines liquid fuel system, atomizing air system, and cooling and sealing air system. Stainless steel piping and components in the liquid fuel system can preclude later changeout should CDL's be used. Provisions for sustaining the higher mechanical loads on the gas turbine structure associated with the large piping need be made. Consideration of a second liquid fuel system for the CDL's and methanol must also be given. Later retrofit for air extraction can be facilitated by providing four blanked-off extraction ports in the combustion wrapper (Figure 5.6) of the baseline machine. Also, in laying out the baseline machine, space must be left for later changeout to longer combustors which may be needed on coal derived fuels. This may require a higher centerline of the gas turbine to permit clearance of the canted combustors with the base.

Heat Recovery Steam Generator Design Basis

Some of the major functional specifications that have been considered in the selection of the design criteria for the major components and subsystems in the power plant area are summarized in Tables 5.15 and 5.16.

Table 5.15 indicates the generation and utilization of high pressure steam. Note the high generation rate in the Synthetic Gas Coolers (SGC's), line 1.2, for both the Integrated Air-Blown Entrained Flow (IAE-CC) and Integrated Oxygen-Blown Entrained Flow (IOE-CC) systems; the higher rate in the IAE-CC relative to the IOE-CC system reflects the greater flow of raw gas due to the entrained nitrogen. Since all of the superheating duty is carried out in the HRSG's, and the available heat to the pinch point is unchanged, the steam generation in the HRSG evaporator, line 1.1, is reduced relative to that in the interim STAG system; this reduction is greatest in the IAE-CC system.

Consequently, the HRSG arrangements when converted to either the IOE-CC or IAE-CC system will have significantly increased superheater surface in order to account for both the increased thermal duty and the inherently smaller Log Mean Temperature Difference (LMTD). Lower LMTD's also offset the reduced functional requirements in the evaporator sections. The net effect is a significant increase in the total surface for both the superheater and evaporator sections.

When converted to either the IOE-CC or IAE-CC systems, the surface in the HRSG economizer sections must also be significantly increased to handle the feedwater heating requirements for the SGC; as indicated in Table 5.13, line 2.0, the functional requirements are about twice that for the Baseline system. Consequently, in converting to either of the entrained flow systems, there must be a significant increase in the proportion of economizer surface in the high temperature range; the proportion in the DASSH system would be reduced accordingly.

In addition, with respect to the overall HRSG design for the entrained flow systems, IAE-CC and IOE-CC, overall HRSG effectivenesses higher than for the Baseline system are economically feasible due to the much greater steam flows. In order to achieve this, and at the same time

Table 5.15

Generation & Utilization of High Pressure Steam

lb/h (Kg/h) x 10^{-3}

PLANT	INTERIM STAG	INTEGRATED AIR-BLOWN ENTRAINED BED (IAE-CC)	INTEGRATED AIR-BLOWN FIXED BED (IAF-CC)	INTEGRATED OXYGEN-BLOWN ENTRAINED BED (IOE-CC)
CASE		C	D	E
1.0 HIGH PRES. STEAM GENERATION				
1.1 HRSG (4-UNITS)	951 (431)	218 (98.9)	1029 (467)	705 (320)
1.2 SYN. GAS COOLER	NA	2396 (1087)	NA	1034 (469)
1.3 TOTAL H.P. STEAM	951 (431)	2614 (1186)*	1029 (467)	1739 (789)*
2.0 H.P. ECONOMIZER	951 (431)	1916 (869)	1029 (467)	1904 (864)
3.0 HIGH PRES. STEAM DEMAND				
3.1 PRIM. AIR COMP. (OXYGEN PLANT)	NA	NA	NA	317 (144)
3.2 OXYGEN COMP. (OXYGEN PLANT)	NA	NA	NA	149 (676)
3.3 BOOSTER AIR COMP. DRIVERS	NA	LOW P. ST. USED	110 (49.9)	NA
3.4 PROCESS STEAM VIA H.P. EXPANDER-GEN.	NA	NA	398 (181)	NA
4.0 STEAM TURBINE THROTTLE/NO. TBS.	951/1 (431/1)	2614/1 (1186/1) 1307/2 (593/2)	521/1 (236/1)	1273/1 (577/1)
5.0 RELATIVE H.P. TB. FLOW REQUIREMENTS @ OPERATING PRESSURE (%)	91	2x100 **	40	97
6.0 OPERATING PRESSURE PSIG (MPa)	1000 (6.895)	1250 (8.619)	1250 (8.619)	1250 (8.619)

* ALL SUPER HTG. IN HRSG's

** 2-UNITS

limit both the gas side and steam side pressure drops to SOA levels with SOA tubing and headering, conversion to both the IOE-CC and IAE-CC systems will include going to twin HRSG boxes. To achieve duplicity of both boxes, the initially installed box for the Baseline system should have provisions for the future installation of increased superheater surface, an increase in the economizer surface allocated to the high temperature range, and an increase in the total economizer surface.

In addition, the structural design for the initial Baseline system installation will be suitable for the heavier conversions.

The functional requirements for the IAF-CC, Case D, as summarized in Table 5.15, although more demanding than for the baseline system, can be met satisfactorily without HRSG modifications.

Steam Turbine, Condenser & Heat Rejection System Design Basis

The steam turbine throttle flow is shown in line 4.0 of Table 5.15, reflecting the total generation, line 1.3, minus (-) the steam utilized for other purposes lines 3.1, 3.2, 3.3 and 3.4. Note that with the high demand for driver power in the oxygen plant, the steam to the throttle in the IOE-CC system is slightly less than half of that for the IAE-CC system.

The selected design criteria with respect to the flow passing capability of the steam turbine and the throttle conditions was based on meeting the most demanding, or dictating, functional requirements as indicated for the IAE-CC system, by the use of two steam turbines with throttle conditions of 1250 psia/950°F (8.619 MPa/510°C). All of the other systems would use one steam turbine. The rationale in establishing these design criteria is as follows:

- The large amount of supplementary steam for both the IAE-CC and IOE-CC systems requires the highest possible steam conditions, compatible with S.O.A. constraints; this is considered to be 1250 psig/950°F (8.619 MPa/410°C). The gas exhaust temperature limits the maximum steam temperature to 950°F (510°C), and a maximum compatible throttle pressure is 1250 psia (8.619 MPa), based on water erosion criteria.

- The use of one such machine for the Baseline system results in operation that is reasonably close to the control valve position for guarantee flow at a throttle pressure of 1000 psig (6.895 MPa) where the overall plant performance is optimized.

- The use of one machine for the IOE-CC system results in operation that is even closer to the control valve position for guarantee flow at the desired maximum throttle pressure of 1250 psig (8.619 MPa).

- The use of one such machine for the IAF-CC system would require only about 40 percent valve position for operation at 1250 psig (8.619 MPa); the nature of the cycle would require this pressure for the best overall plant efficiency in spite of some degradation due to part-load operation. However, in spite of the under utilization of the machine, operation would be entirely satisfactory.

Table 5.16 is a summary of the major functional requirements which were considered for sizing the low pressure section of the steam turbine, the condenser and the heat rejection system.

Note that the IOE-CC system has the maximum low pressure section flow requirement in spite of having a smaller throttle flow than the IAE-CC system, line 5. This reflects the combined effects of high extraction requirements and the use of two steam turbines in the latter system. Note that the condenser has the same sizing criteria, but would be tubed initially only to meet the functional requirements of the baseline plant.

As indicated, the design basis for the heat rejection system, line 8.0, is the functional requirements of the interim STAG plant, reflecting the relative ease with which additional modules could be added, as required, at the time of conversion.

2. Plant Arrangement

The plant arrangement has been configured such that space is available for the proper orientation and integration of equipment for all subsequent conversions.

Table 5.16

Steam Turbine-Condenser & Heat Rejection Summary

lb/h (kg/h) x 10^{-3}

PLANT	INTERIM STAG	INTEGRATED AIR-BLOWN ENTRAINED-BED (IAE-CC)	INTEGRATED AIR BLOWN FIXED BED (IAF-CC)	INTEGRATED OXYGEN-BLOWN ENTRAINED-BED (IOE-CC)
CASE		C	D	E
1.0 THROTTLE FLOW/NO.TBS.	951 (431)	2614/2 (1185/2)		
2.1 F.W. HEATING & SEALS	5 (2.3)	188 (85.3)	5 (2.3)	78 (35.4)
2.2 MECHANICAL DRIVERS	-	375 (170)	-	-
2.3 NOx CONTROL	107 (48.5)	-	-	23 (10.4)
2.4 GAS CLEANUP PROCESS	-	-	-	11 (5)
3.0 STEAM TB ADMISSION	136 (61.7)	-	175 (79.4)	-
4.0 CONDENSER FLOW/NO.TBS.	974 (442)	2051/2 (930/2) 1026/1 (465/1)	691/1 (313/1)	1161/1 (527/1)
5.0 RELATIVE MAIN CONDENSER FLOW (%)	84	88 (EACH OF 2)	60	100 *
6.0 MECHANICAL DRIVER CONDENSER FLOW	-	375.2 (170.2)	109.8 (49.8)	465.8 (211.3)
7.0 TOTAL CONDENSER FLOW	973.9 (441.8)	2426.2 (1100.2)	800.8 (362.9)	1626.6 (738.3)
8.0 RELATIVE HEAT REJECTION SYSTEM (%)	100 *	249	82	167

* DESIGN BASIS

Figure 5.23 shows, in building-block fashion, the major classification of equipment for which the allocation of land would have to be made. The scope of equipment for the Interim STAG would comprise those blocks labeled CC Power Plant, Switchyard, Water Treatment, Cooling Tower and Distillate Fuel Oil Tanks. Subsequent conversion to coal-derived fuels which would be delivered to the site would essentially require this same land area. Conversion to the integrated gasification alternatives mandates the remainder of land allocations shown. Only the Oxygen-Blown Entrained Flow case would require the oxygen plant. Provision is made in each block for retrofit. For instance, space will be available in the CC Power Plant block for second HRSG boxes and other steam additions. Figure 5.24 shows the arrangement of the Combined-Cycle Power Plant block for the baseline plant for a configuration where exhaust from each pair of gas turbines is carried off in a common tall stack. (Where environmental regulations permit it, tall stacks will not be necessary). Note the room available for additional HRSG boxes.

The nature of the plot configuration available at each utility's site can be expected to vary and will influence the plant arrangement shown considerably. It should be stressed, however, that the Interim STAG has a very high power-to-area ratio which is conducive to applications where space is limited. Suggested plant arrangement drawings are included in the report for all of the plant selections. Figure 5.25 shows the suggested plant arrangement for the baseline plant.

3. Modifications for Coal-Derived Fuels - Summary

As in earlier discussions of Sections 5.2.1 and 5.2.2, the extreme cases of modifications of coal-derived liquids and gases will be considered here. The Medium and Heavy Cut CDL's, the "Free Standing" Intermediate Btu gas and Integrated Air-Blown Entrained Flow Low BTU gases will be considered. The gas turbine power plant modifications required to accommodate these fuels have been discussed in Section 5.2.2 and are summarized in Table 5.17. Modifications to the steam system are summarized in Table 5.18 and plant layout modifications in Table 5.19.

To assess the range of impacts on plant arrangement, Figures 5.26 through 5.29 show the plant arrangements for the Medium Cut CDL, Heavy

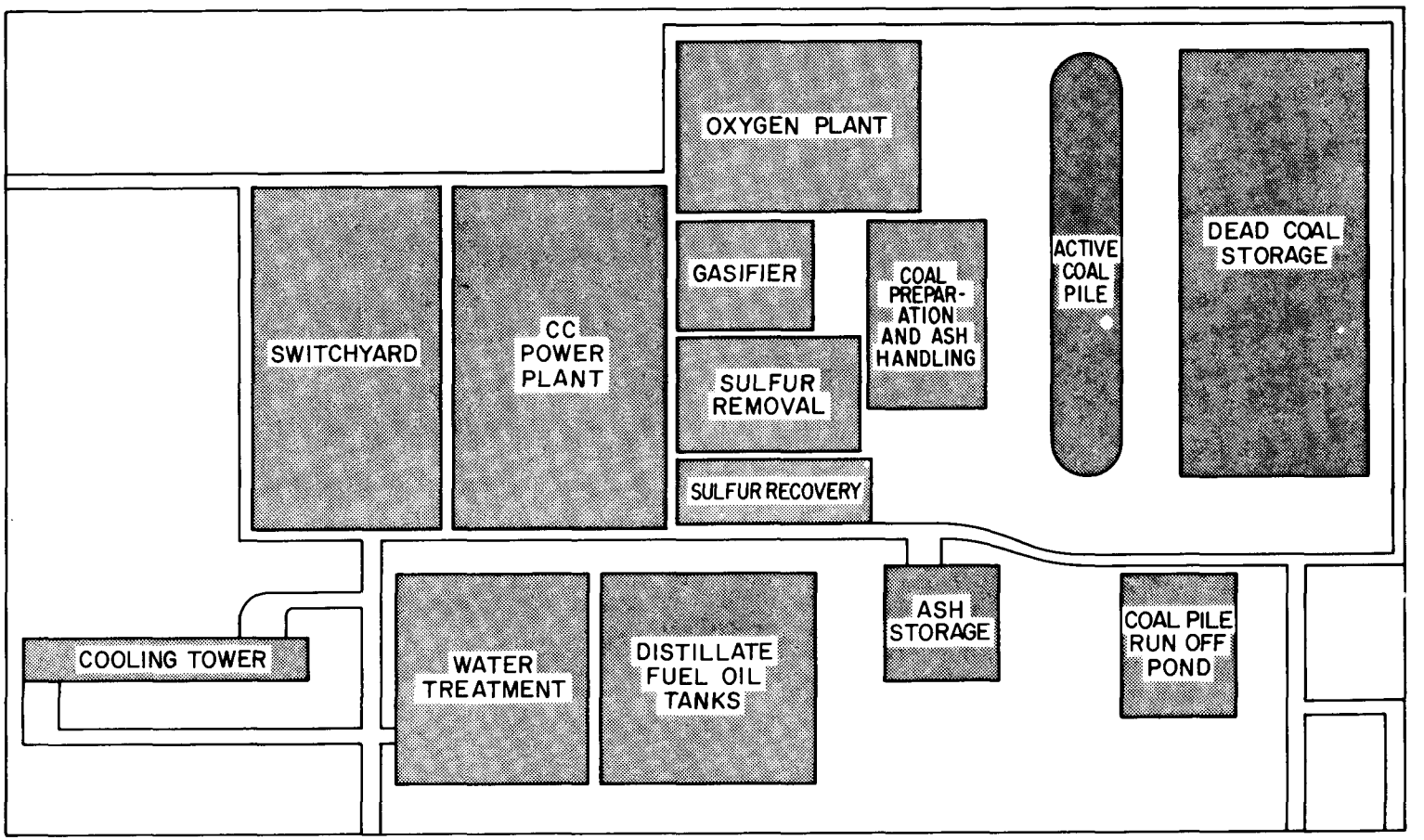

Figure 5.23: Plant Arrangement Drawing Showing Building Block Layout

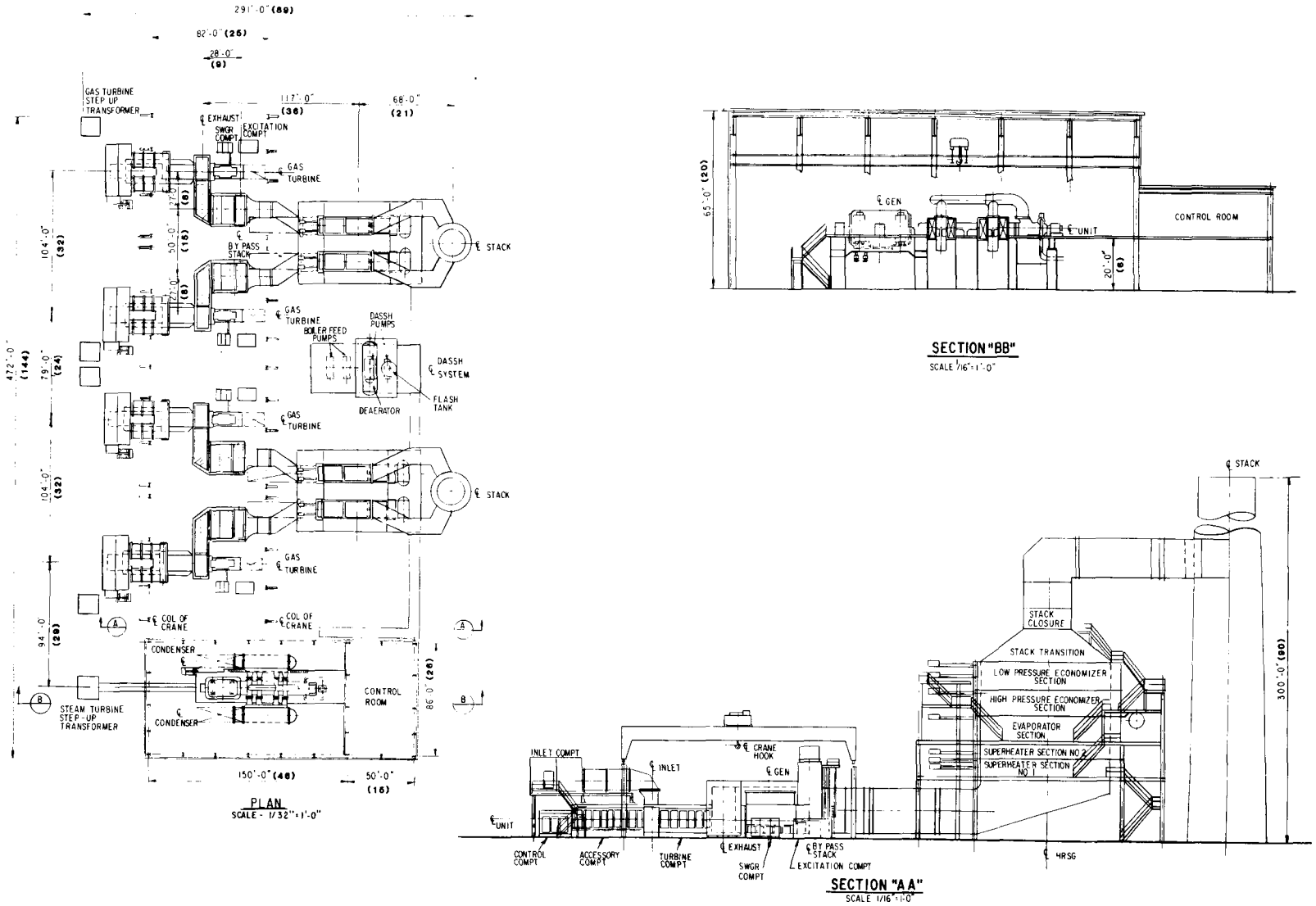

Figure 5.24: Typical Arrangement for Distillate Fuel with Common Stacks

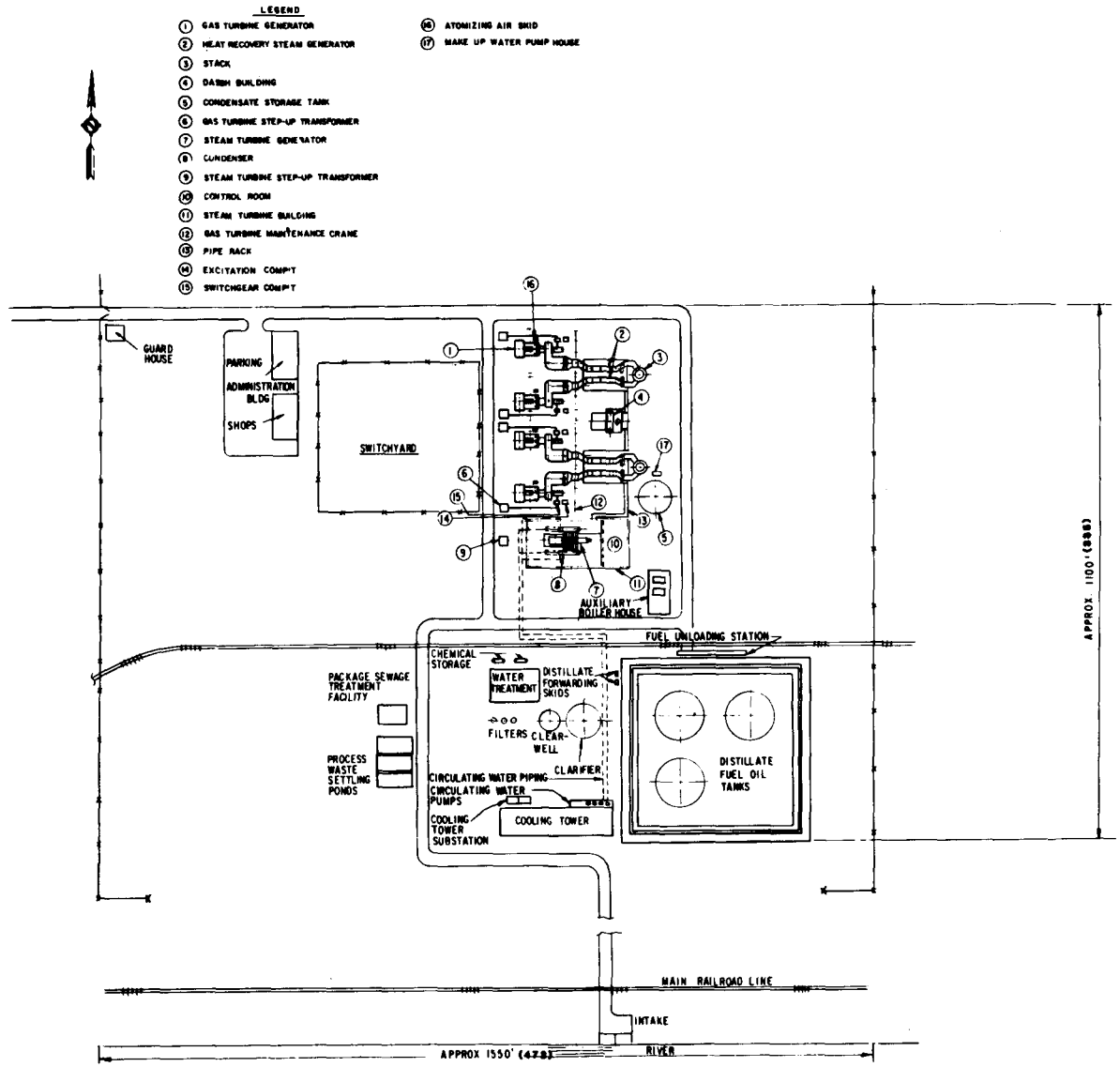

Figure 5.25: Base Case - No. 2 Petroleum Distillate Plant

Table 5.17

Gas Turbine Equipment Additions and Modifications

	CDL MEDIUM CUT	CDL HEAVY CUT	LOW BTU GAS, INTEGRATED, AIR BLOWN ENTRAINED FLOW	INTERMEDIATE BTU GAS FREE STANDING
NEW COMBUSTION SYSTEM	X	X	X	X
DRY LO NOx OR STEAM INJECTION	X	X		X
1850°F FIRING TEMPERATURE		X		
LIQUID FUEL TRANSFER SKID	X			
MAIN FUEL PUMP + FLOW DIVIDER SKID		X		
ADDED SPEEDTRONIC PANEL	X	X	X	X
GAS FUEL VALVE SKID			X	X
EXTRACTION AIR VALVE SKID			X	
HIGH PRESSURE ATOMIZING AIR	X	X		
INTERCONNECT FUEL TUBING		X		
FUEL LINE PURGE SYSTEM		X	X	X
GAS MANIFOLD + PIPING			X	X
EXTRACTION AIR SYSTEM & WRAPPER MODS.			X	
INTERCONNECT CONTROL OIL PIPING		X	X	X
INTERCONNECT CONDUIT		X	X	X
NEW ROOF			X	X
WIDER LAGGING			X	X
NEW WALKWAYS			X	X
ADDED CO_2 CAPACITY			X	X
TURBINE NUT SHELL SYSTEM		X		
TURBINE WATER WASH SYSTEM		X		
FUEL WASH AND/OR BUCKET MAT'L/CLAD.		X		

Table 5.18

Steam System Additions & Modifications

	No. 2 PETROLEUM DISTILLATE	CDL-MED. CUT	CDL-HVY. CUT	AIR BLOWN ENTR. FLOW GASIF.	FREE STANDING O_2 BLOWN GASIF.
• RELATIVE STM TURB. FLOW CAPACITY @ RATED STM. COND.(%)	91	91	78	(2) 100	94
• HRSG MOD'S	BASE	NONE	• ADD 2ND HRSG BOX TO EACH HRSG • ADD DeNOx MODULE • REPLACE STEAM DRUM W/LARGER DRUM FOR TWIN HRSG'S	• ADD 2ND HRSG BOX TO EACH HRSG • REPLACE STEAM DRUM W/LARGER DRUM FOR TWIN HRSG'S • ADD TUBE RUNS IN SUPERHEATER • COMBINED ECONOMIZER AND DASSH SECTIONS • ADD NEW DASSH SECTION REDUCE TUBE ROWS IN EVAPORATOR	NONE
• STEAM TURBINE MOD'S	BASE	NONE	NONE	ADD 2ND TURBINE	NONE
• TURBINE THROTTLE PRESS (PSIG)	1000	1000	1000	1250	1000
• PROVISIONS FOR NOx CONTROL	EXTRACTION FOR STEAM INJECTION	EXTRACTION FOR STEAM INJECTION	DeNOx	NONE	EXTRACTION FOR STEAM INJECTION

Table 5.19

Major Plant Mods

	CDL MED. CUT	CDL HEAVY CUT	LBTU GAS INTEG. AIR BLOWN ENT. FLOW	IBTU GAS FREE STANDING
ADDED FUEL TANK & FORWARDING EQUIPMENT	X	X		
HEAT TRACED LINES & FUEL HEATERS		X		
COAL STORAGE & HANDLING			X	
GASIFIERS & CLEANUP SYSTEM			X	
ADDED STEAM SYSTEM SUPPORT EQUIP.			X	
LARGER STEAM TURBINE BUILDING			X	
BOOST COMPS. & DRIVE TURBS.			X	
ADDED COOLING TOWER & AUX.			X	
DASSH BLDG. EXTENSION			X	
ADDED WATER TREAT. & PUMPS			X	
ENLARGE SWITCH YARD			X	
ENLARGE PROCESS WASTE PONDS			X	
ADDED 2d MAINT. SHOP & GARAGE			X	
ADDED RAIL SIDING			X	
PLOT SIZE (ACRES)	≈40	≈40	95	≈40

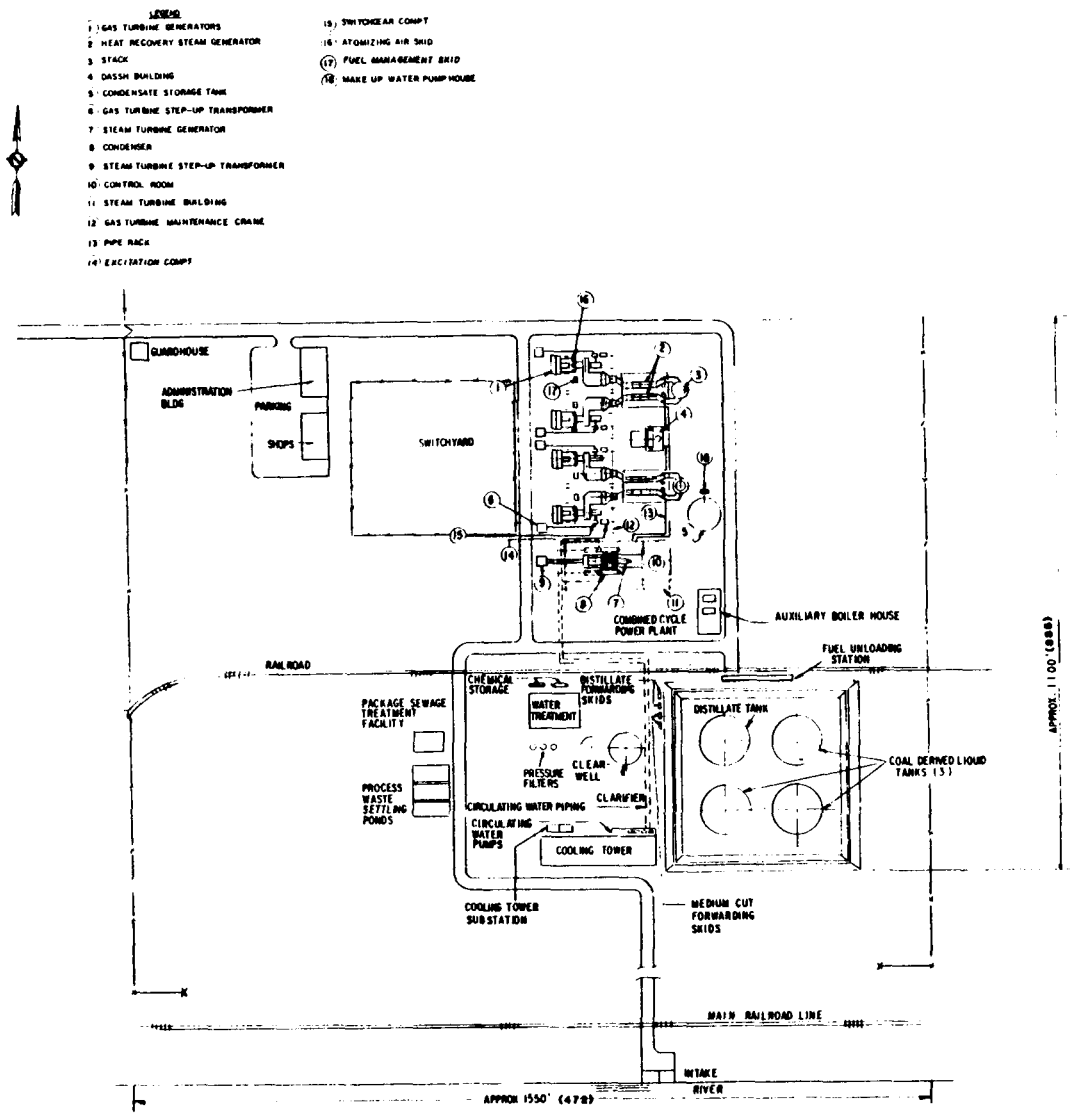

Figure 5.26: Medium Cut Coal Derived Liquid Plant

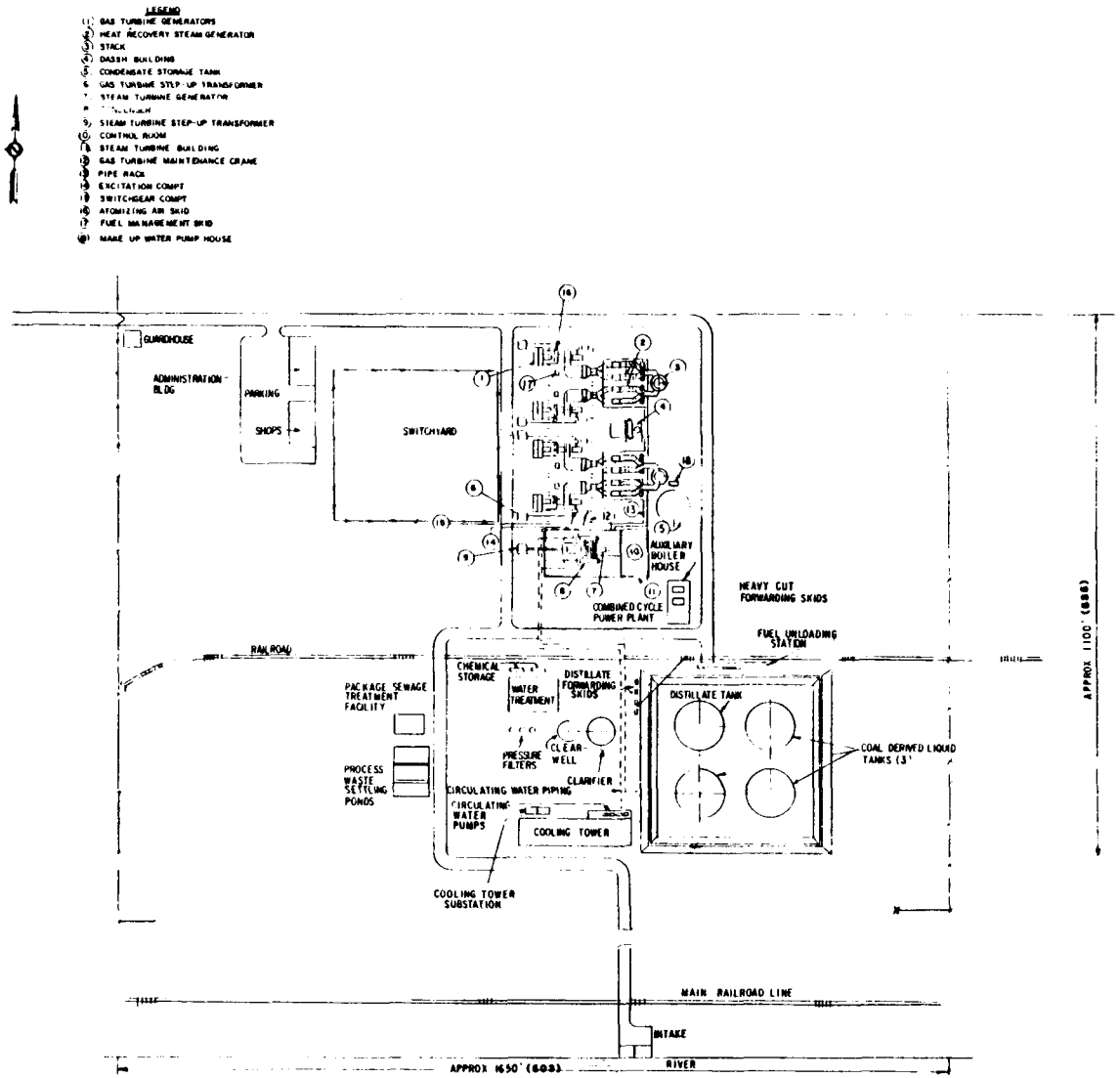

Figure 5.27: Heavy Cut Coal Derived Liquid Plant

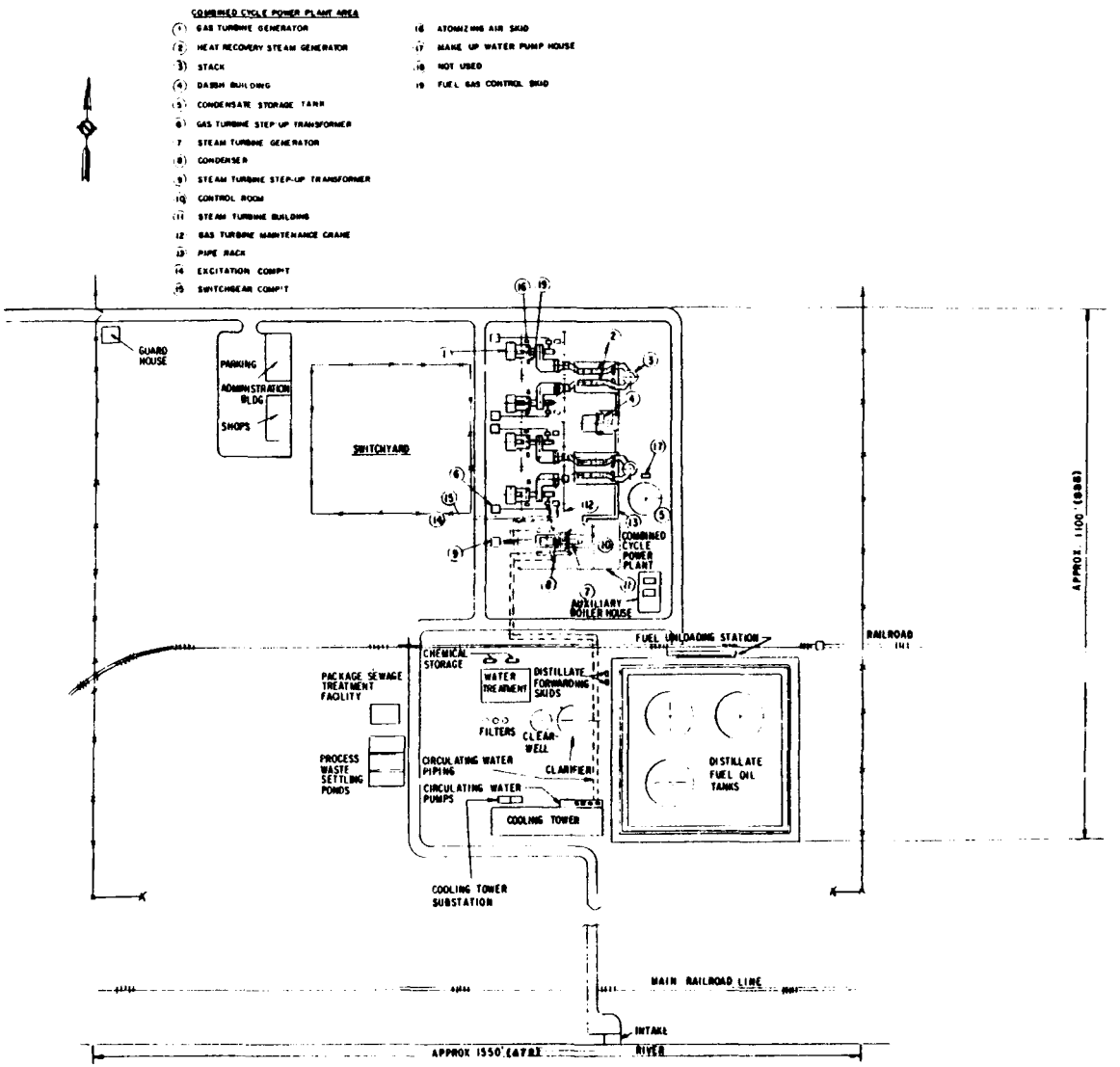

Figure 5.28: Free Standing Oxygen Blown Intermediate Btu Coal Gas Plant

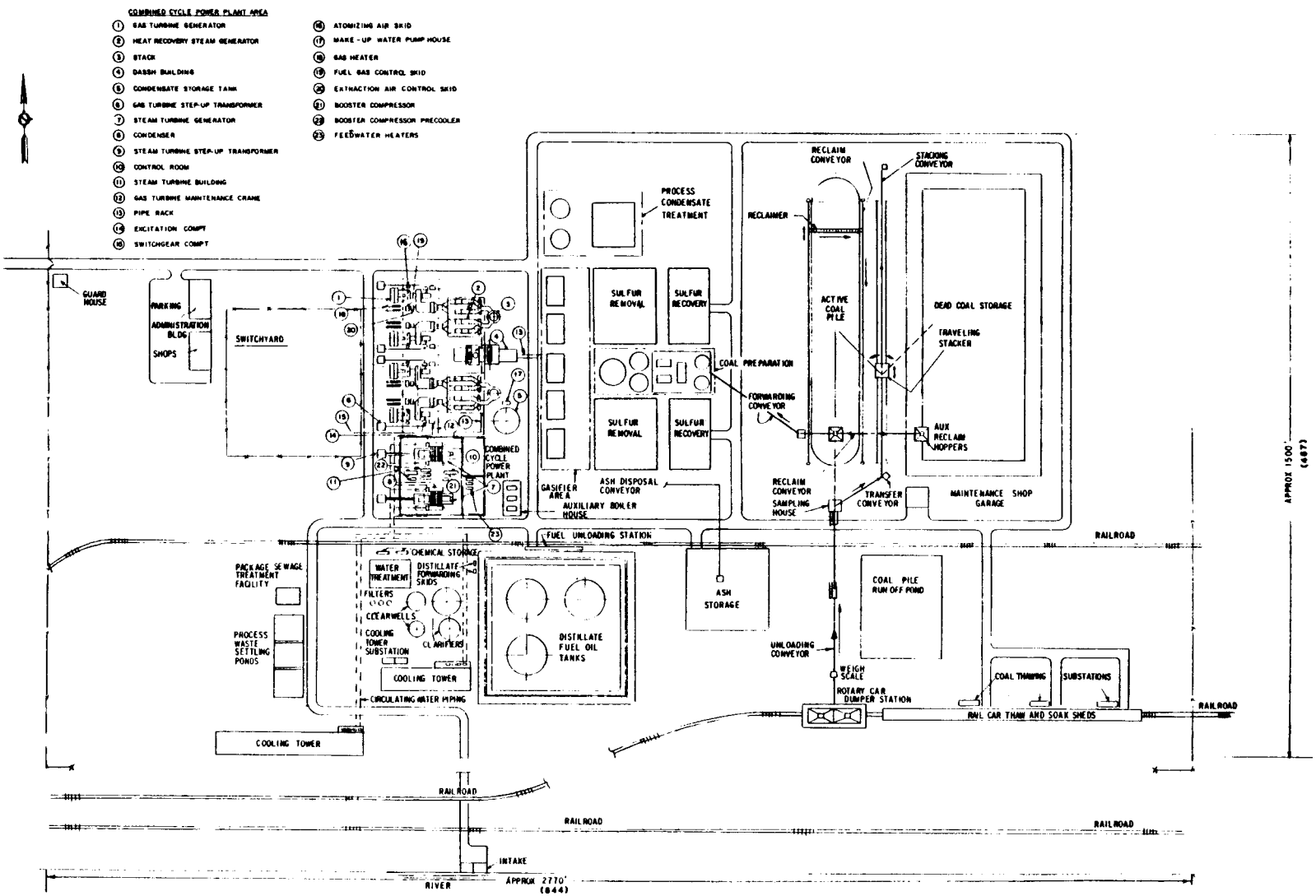

Figure 5.29: Integrated Air Blown Entrained Flow Low Btu Gasification Plant

Cut CDL, Free-Standing Intermediate Btu Gas, and Integrated Air-Blown entrained flow cases, respectively. Figure 5.29 shows the much larger impact on plant arrangement for the integrated air-blown entrained flow gasifier case. This bears out the impression from Table 5.19.

4. Provisions for Availability on Coal-Derived Fuels

The concepts incorporated in the New Centerline Design to enhance availability will be extended to the Baseline design. Basic reliability on coal-derived fuels could be enhanced by designing the baseline system from the start for retrofit, and by incorporating material and design modifications normally reserved for residual fuels. In addition, in the modified plants, petroleum distillate remains as a startup and shutdown fuel as well as a backup fuel in all cases (with the possible exception of the Medium Cut CDL). This provides a basic backup for continued operation of the plant during an outage or deficiency in the coal-derived fuel supply system. The electronic control panel should be designed with consideration in mind for minimum field wiring changes or addition of a second panel containing CDF provisions.

In the CDL systems, redundant fuel filters will permit element changeout while operating. Self-cleaning filters may also prove useful, although the wax problem expected with heavy petroleums will not be as severe in CDL's. Other provisions to assure availability including fuel cleaning, heat tracing of fuel lines and fuel system purging have already been discussed.

All of the coal-derived gas systems can benefit from redundant filtration as well. In addition, the possibility of moisture slugs due to condensation can be met by adequate heat tracing of the gas lines and provision of knockout drums. The fuel gas system must be designed to avoid accumulation of moisture during shutdowns and a purge system provided to assure the gas system is filled with dry, inert gas during shutdowns. Since gas quality can change (LHV, water content and superheat level, alkali metals, etc.) with changes in gas plant operating mode, gas condition monitors must be provided. Ideally, when the gas goes out of limits, an automatic transfer to distillate operation can be effected when the gas condition monitor system commands it. Such a

system does not now exist, but should be a development objective for future plants.

Availability of integrated gasification combined-cycle plants will benefit from a carefully integrated control system and by arrangement of critical components into appropriate parallel, independent trains. The latter will not only permit isolation of plant units on forced or planned outage, but also permits normal operation of the plant at improved part load efficiency, as shown in Figure 5.30. In that figure, the Heat Rate vs. Load curve is shown for one and two trains operating. It can be seen that a heat rate improvement will result from shutting down one train below a certain load level.

An overview of the integrated plant control system is given in Figure 5.31. The system must have the capability for automatic startup on No. 2 distillate, subsequent transfer to low Btu fuel when available, operation at load and fail-safe operation when required due to contingencies. Provision should be made for automatic transfer back to distillate to maintain load on gas turbines affected by a fuel gas system upset. This not only provides improved power generation availability, but also permits quick return of the fuel gas system to normal operation in many cases by providing continuous availability of steam and, in the case of air-blown plants, of extraction air.

In the integrated oxygen-blown entrained flow, for example, the gasification plant will be configured as follows:

		No. of Trains	
	Function	Operating	Spare
1.	Coal Handling & Pulverization	1	0
2.	Oxygen Plant	2	0
3.	Coal Grinding	2	0
4.	Slurry Preparation	1	0
5.	Gasification/Synthetic Gas Cooling	2	1 (1 gasif. + SGC)
6.	Ash Handling	1	0
7.	Carbon Scrubber	2	0

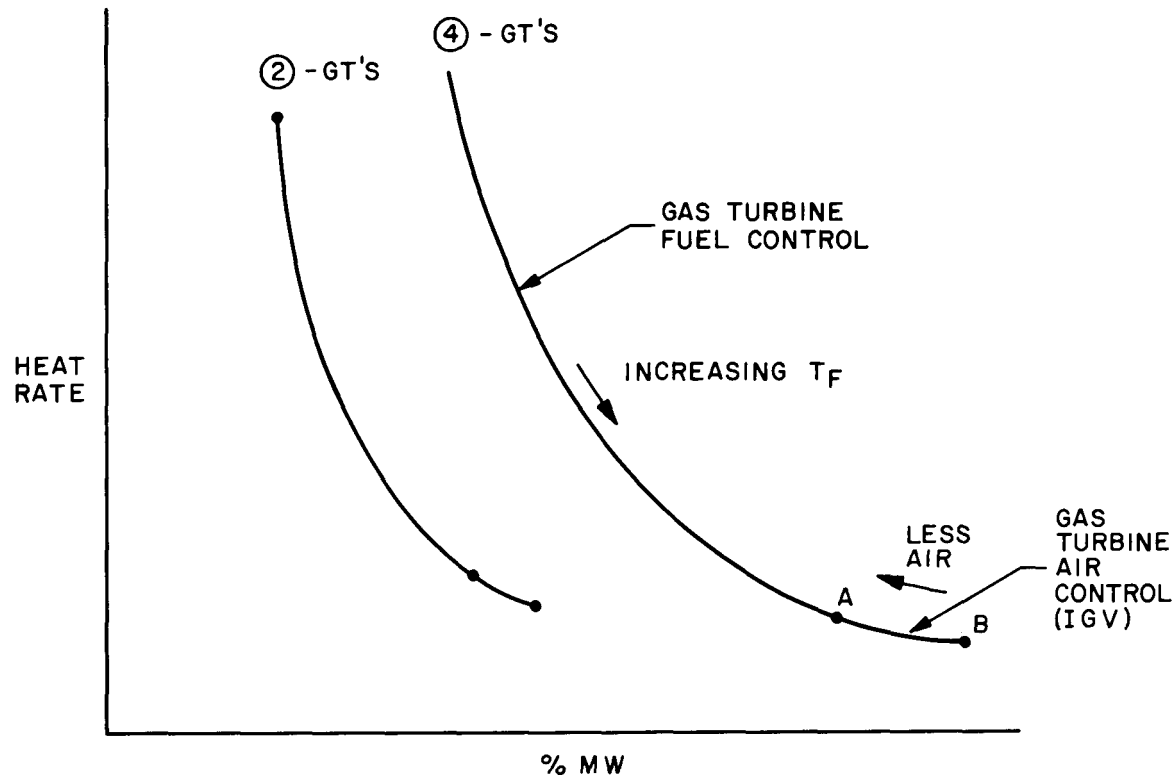

Figure 5.30: Load Control Modes IOE-CC

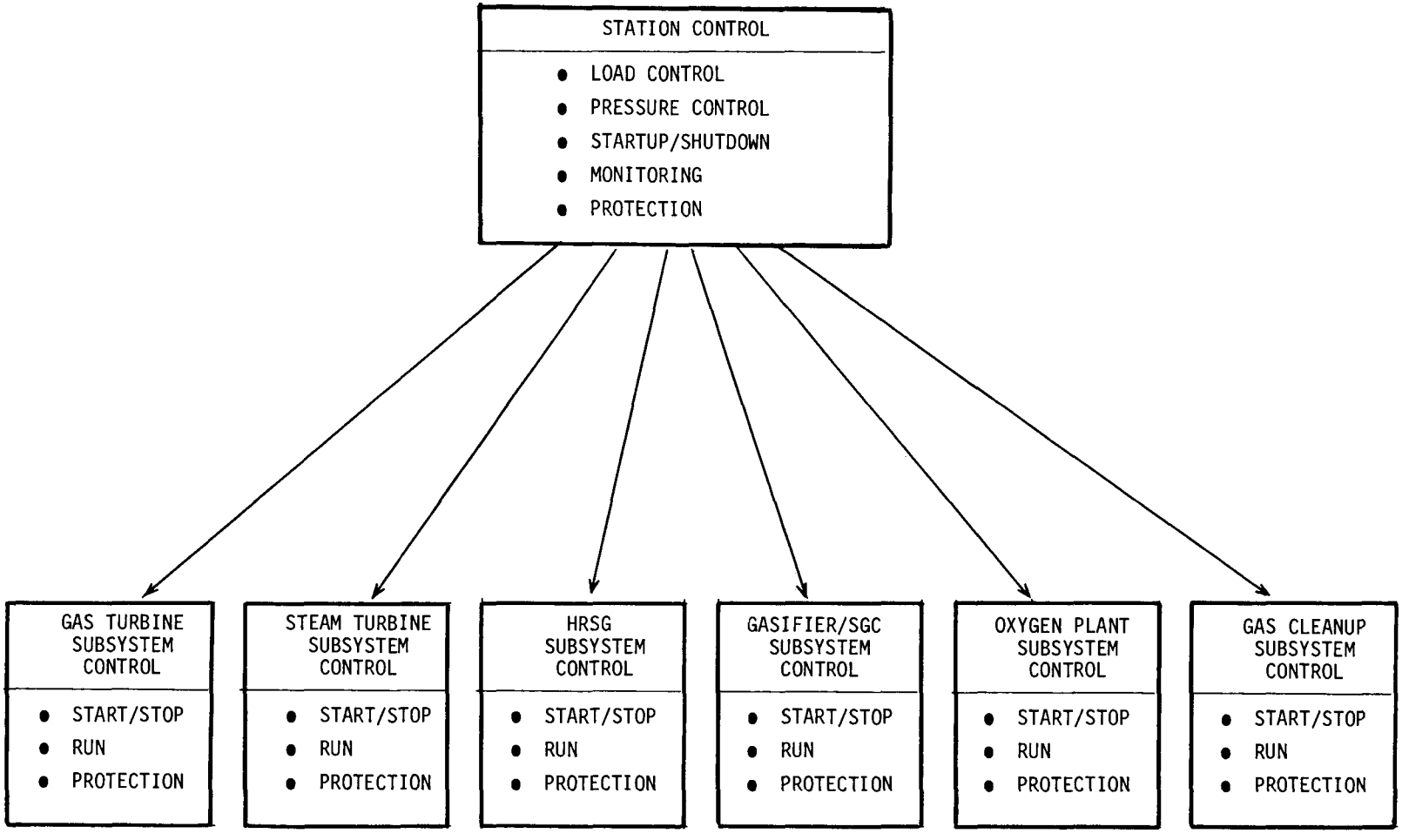

Figure 5.31: IGCC Station Control
Entrained Flow-Oxygen Blown Gasifiers

8.	Gas Cooling	2	0
9.	Acid Gas Removal	2	0
10.	Sulfur Treatment & Tail Gas	2	1

The integrated plant schematic diagram is presented in Figure 5.32, illustrating the above arrangement of trains in the fuel gas plant, and Figure 5.33 shows a simplified schematic diagram of the resulting station control.

Referring to Figure 5.32, each fuel gas train contains entrained-flow oxygen-blown gasifiers, with associated synthetic gas coolers (SGC's), feeding into a common raw fuel gas header. A spare gasifier and SGC is provided which may be coupled into either fuel gas train to permit maintenance and repair of a gasifier. Gas flow from each raw gas header passes through a separate gas cleanup system where the particulates, H_2S, COS and NH_3 are removed. Clean gas from each gas cleanup system flows to a fuel gas header which serves the two gas turbines in the train. Both gas cleanup systems are serviced by a single Stretford unit which serves to remove sulfur from the tail gas leaving each of the Claus plants.

Oxygen required for operation of the gasifiers is generated in two completely independent oxygen plants which separates oxygen from atmospheric air and compress the oxygen up to a pressure suitable for use in the gasifiers. Figure 5.34 shows the schematic of one oxygen plant. Each oxygen plant feeds and controls the pressure in an oxygen supply header which feeds the two gasifiers in a fuel gas train. Each oxygen plant contains a steam turbine driven air and oxygen compressor. Steam for the driver turbines is obtained from the plant main steam headers.

The above arrangement provides a flexibility of operation permitting continued availability of power generation while portions of the fuel gas plant are shut down for maintenance or repair. It can be seen that similar approaches to the air-blown integrated fuel gas plants will yield similar benefits.

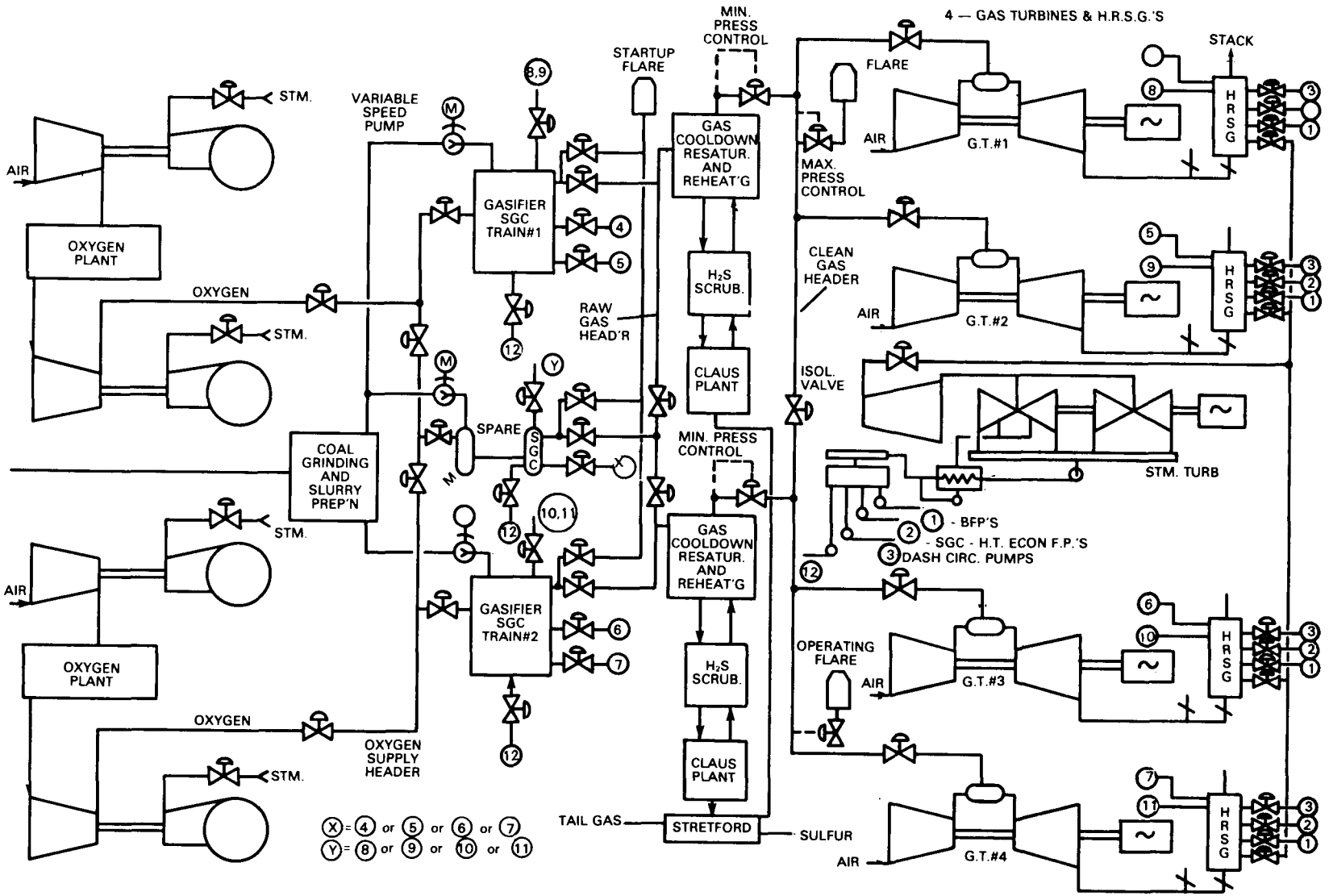

Figure 5.32: Simplified Schematic - IGCC
Entrained Bed Oxygen Blown Gasifier/Combined Cycle

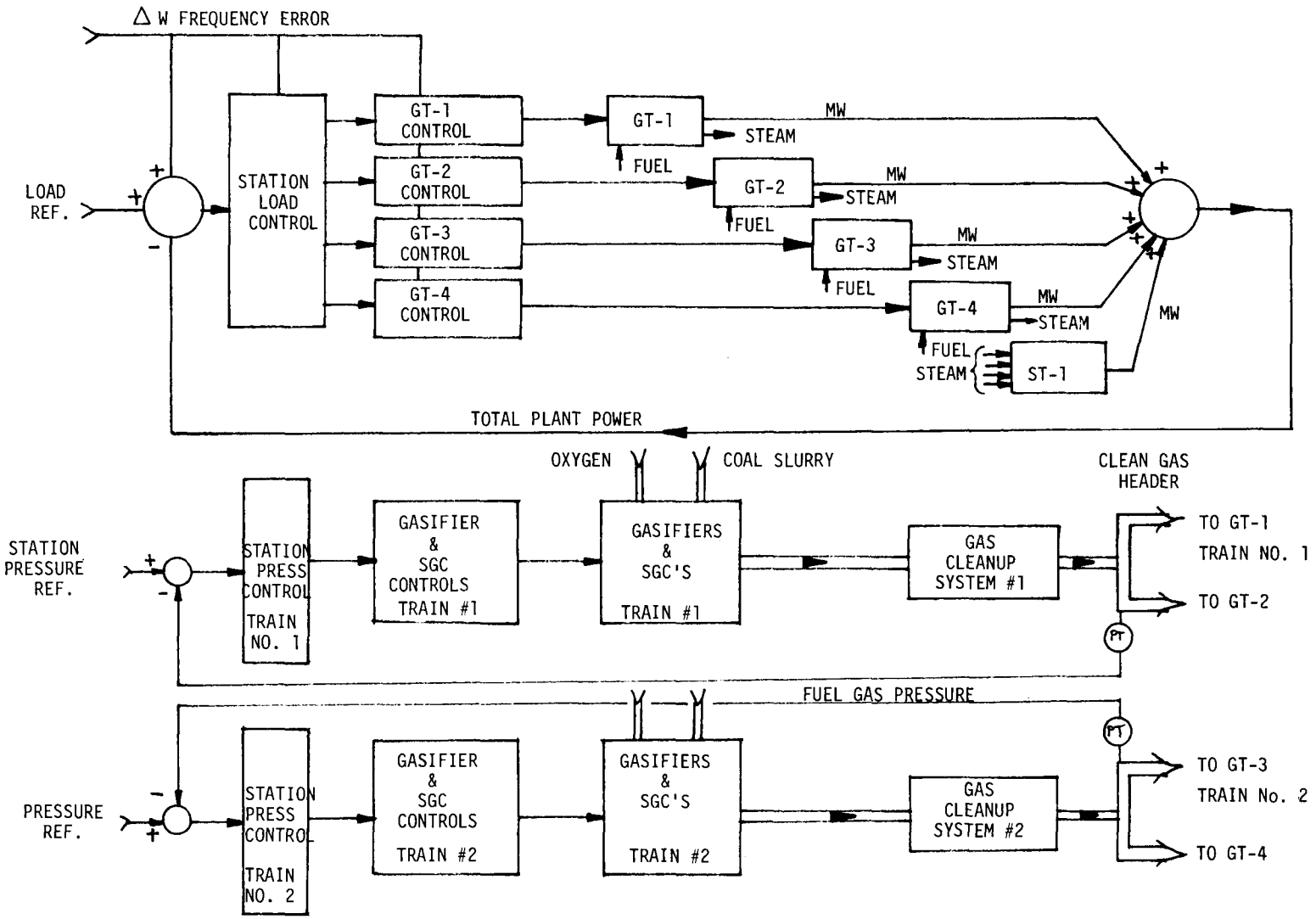

Figure 5.33: Simplified Schematic IGCC - Station Control

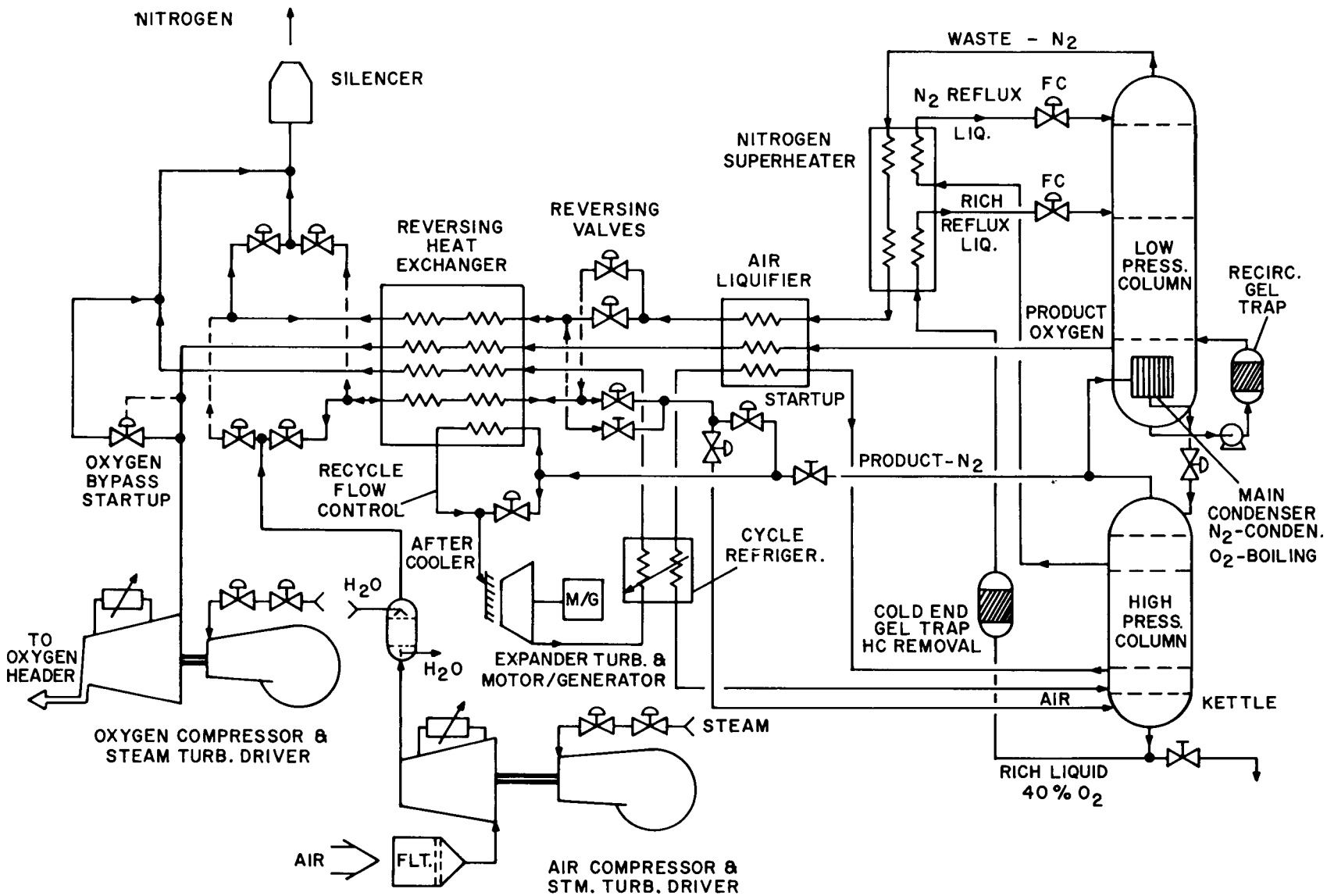

Figure 5.34: Oxygen Plant Simplified Schematic - Typical

Coal Derived Fuel References

1. Combustion Properties of Coal Liquids from the Exxon Donor Process, C.W. Quinlan and C.W. Siegmund. American Chemical Society Meeting, Anaheim, CA, March 12-17, 1978.

2. Utilization of Coal-Derived Liquid Fuels in a Combustion Turbine Engine, A.V. Cabal, M.J. Dabkowski, R.H. Hick, T.R. Stim, R.M. Chamberlin, P.R. Mulik, P.P. Singh and W.C. Rovesti. American Chemical Society Meeting, Anaheim, CA, March 12-17, 1978.

3. The SRC-II Process, B.K. Schmid and D.M. Jackson (Gulf Mineral Resources). Second Pacific Chemical Engineering Congress, 1977.

4. Economic Screening Evaluation of Upgrading Coal Liquids to Turbine Fuels, Mobil R&D Corp. EPRI Report AF-710, March, 1978.

5. Comparative Characterization and Hydrotreating Response of Coal, Shale, and Petroleum Liquids, Ashland Oil Inc. American Chemical Society, preprint Vol. 11, 1976, pp. 785-792.

6. DOE Report FE-2893-16, Summary of Exxon Donor Solvent Development, July, 1978.

7. SRC-II Review of Development and Status, D.M. Jackson and B.K. Schmid, Fifth Annual Energy Technology Conference, Washington, D.C., Feb., 1978.

8. Characterization and Combustion of SRC-II Fuel Oil, EPRI Report Fp-1028, June, 1979.

9. Upgrading of Coal Liquids For Use As Power Generation Fuels, EPRI Report 361-1, January, 1976.

10. Fuel Effects in Recent Combustion Turbine Burner Tests of Six Coal Liquids, P. Pillsburn, A. Cohn, P. Mulik, P. Singh and T. Stein. ASME Gas Turbine Conference, March, 1979.

11. Trace Elements in the Solvent Refined Coal Process, R.H. Filby, K.R. Shah (Washington State University), Symposium on Environmental Aspects of Fuel Conversion Technology.

12. Presentation of SRC-II pilot plant fuel product properties and status. Low NOx Combustor Study Contractors Conference. NASA, LERC Cleveland, July, 1979.

13. Evaluation and Test of SRC-II Pilot Plant Coal Liquid Fuels for Gas Turbine Application. GE-Gas Turbine Division Engineering Memo Report, 78FC973, J.W. Hickey, October, 1978.

14. Low-Btu Gas Combustion, R.A. Farrell. Internal G.E. Report 79-GTD-137 May, 1979.

15. Alternate Gaseous Fuels, R.A. Farrell, R.L. Gessner, H. von E. Doering. General Electric Publication GER-3092.

16. High Reliability Gas Turbine Combined Cycle Development Program. EPRI Contract 1187-3, Phase 1 Topical Report, R.G. Kunkel, et al.

17. Development of an Industrial Gas Turbine Combustor Burning a Variety of Coal Derived Low Btu Fuels and Distillate, R.A. Battista and R.A. Farrell. ASME Power 79-GT-112.

18. Heavy Duty Gas Turbine Design Changes for Use with Low Btu Coal Gas, W.A. Boothe and J.C. McMullen. ASME Power 79-GT-198.

19. Economic Studies of Coal Gasification Combined-Cycle Systems for Electric Power Generation by Fluor Engineer & Constructors, Inc., EPRI Report AF-642, January, 1978.

20. Preliminary Design Study for an Integrated Coal Gasification Combined-Cycle Power Plant, by Ralph M. Parsons Co., EPRI Report AF-880, August, 1978.

Blank

6.0 Present Market Offering Retrofits

In considering any component or system for retrofit potential, two basic factors have to be investigated --

a. the cost benefit of the retrofit,
b. the need for the retrofit.

It is unlikely that any innovations in the flange-to-flange area will prove to be cost effective retrofits. It would require major design changes to accommodate, for example, the canted combustor. In the accessories area, some retrofits are apparent. Table 6.1 lists the potential accessories retrofits and a value judgment as to their probability for retrofit. It must be remembered, however, that the cost effectiveness of a retrofit will depend very heavily on the age and useful life of the machine. This is discussed further below. Retrofits are more likely to be cost effective for mid to baseload duty cycles. The microprocessor-based controller would appear to be an ideal retrofit when it becomes available. Improvements in availability can also be realized from redundancy in control devices. Although essentially all of the changes shown in Table 6.1 have currently been incorporated into our MS7001E machine as standard or optional features or will be in the very near future, the vast majority of the field units have few of them installed. The feasibility of retrofitting these changes to current field units is very difficult to evaluate. The question of the cost effectiveness of even the simplest change will vary greatly depending on the service conditions and usable life of each specific unit. This problem is further compounded by the varying labor costs at each given site. To begin with, any change which has an impact on system design would not be cost effective because of the complexity of the modifications and the large associated installation cost. Changes which fall into this category would be: changing to a hydrogen cooled generator, addition of a media filter, conversion to independent cooling modules, installation of a new torque converter and dual lube oil filters.

Other changes which would probably not be cost effective because of the high conversion cost when compared to a moderate to slight reliability improvement would be: new fuel pump, new flow divider, elimination of fuel

Table 6.1

Summary of Potential Accessories Retrofits

		ESTIMATE OF DIFFICULTY OF INSTALLING RETROFIT		COST EFFECTIVENESS OF RETROFIT
		LOW	HIGH	ΔHDW $/ΔFAIL.$
ATOMIZING AIR	- TRIP DEVICES ELIMINATED	X		0.0
	- MEDIA FILTER		X	NOT EVALUATED
FUEL SYSTEMS	- TRIP PRESSURE SWITCHES ELIMINATED	X		0.0
	- SCREW TYPE FUEL PUMP		X	NOT EVALUATED
	- IMPROVED STAINLESS STEEL FLOW DIVIDER		X	NOT EVALUATED
	- NO FUEL PUMP CLUTCH		X	NOT EVALUATED
	- DUAL LOW PRESSURE FILTERS	X		0.1
	- DUAL FUEL FORWARDING PUMPS	X		NOT EVALUATED
	- REDUNDANT FUEL FORWARDING SKID	X		0.4
COOLING WATER	- DUAL WATER PUMPS		X	0.5
	- INDEPENDENT MODULES		X	NOT EVALUATED
LUBRICATING SYSTEM	- FULL SIZE AC AUX. PUMP		X	0.05
	- DUAL HEAT EXCHANGERS		X	0.7
	- DUAL FILTERS		X	0.2
	- REDUNDANCY IN TRIP SWITCHES	X		0.0
LOAD	- HYDROGEN COOLED GENERATOR		X	0.2
STARTING SYSTEM	- IMPROVED SEQUENCE	X		0.2
	- IMPROVED TORQUE CONVERTER		X	0.0
FIRE PROTECTION	- FEWER DETECTORS	X		0.0
	- IMPROVED DETECTORS	X		0.0
	- EXTERNAL SENSOR WIRING	X		0.0
HYDRAULIC SYSTEM	- DUAL FILTERS	X		0.2

Note: Cost Effective if <1.0

0.0 ⇒ Reduction in failure rate without an increase in hardware costs

pump clutch, independent cooling modules, dual water pumps, dual lube oil heat exchangers and full size auxiliary lube pump. The changes which offer the best reasonable chance of improving reliability at a justifiable cost are: dual low pressure fuel filters, dual fuel forwarding pumps, elimination of atomizing air and fuel systems trip switches, redundancy of lube oil system trip switches, and use of improved externally wired fire detectors. As stated before, an independent evaluation must be made for each specific unit and site but these would be the most likely candidates.

Because the new centerline design is essentially a modified MS7001E, all fixed fleet modifications, shown in Table 6.2, will be retrofitable. The specific retrofit compatabilities will depend on the model being retrofitted.

Table 6.2

Fixed Fleet Retrofits

- COMBUSTION LINER
- THICK WALL TRANSITION PIECE
- EXTENDED THERMOCOUPLES
- BUCKET INSPECTION
- STRAIGHTENED BUCKETS
- BORE FAN DELETION

APPENDIX A

LIFE CYCLE COST

It is our intent to utilize as simple a trade-off tool as practical, which closely aligns the objectives of all levels of the manufacturer's organization with the more global objectives of the customer. Of particular importance is the need to be able to answer design detail reliability questions simultaneously with subsystem and system questions. This is a basic manufacturer's reliability engineering objective.

It is also important to establish higher system level design criteria at the same time as (if not before) establishing lower system level design criteria. The system design for reliability needs to be integrated vertically. The power cost formula provides one form of this needed vertical reliability design integration; the Life Cycle Cost (LCC) analysis, previously used by GTD reliability engineering, provides another. The power cost formula is a utility system analytical tool which requires certain gas turbine (a component in the system) reliability-oriented parameters to be quantified with some degree of accuracy in order to satisfactorily complete the analysis. Conversely, the LCC analysis, as used by GTD, is a manufacturer-oriented tool which requires certain utility system reliability cost-oriented parameters to be quantified with some degree of accuracy in order to satisfactorily complete the analysis. What is the cost of downtime (value to availability or cost of forced outage rate) when a particular component in the system is down?

All reliability and maintenance costs are a function of the (classical) failure rate, and we have grouped these in a single matrix. The independent variables in this matrix are combined-cycle system hardware constituency, system failure modes, failure rates, and three maintainability-oriented parameters. The model output parameters are the equivalent capital investments of all failure and maintenance (F&M) costs, both separately and combined. Since the equivalent capital investment F&M cost is calculated it may be added directly to initial costs of the system. Similarly, the equivalent capital investment of fuel costs is calculated (including two percent fuel escalation above general inflation).

The equations used to make the LCC trade-off calculations are as follows:

$$\text{LCC} = \text{Initial Costs} + \text{Fuel Costs} + \text{Fail/Maint Costs} + \text{Non-variable Costs}$$

Where:

LCC = equivalent capital investment of life cycle costs associated with all factors which effectively cause or control costs. LCC is minimized to optimize all factors simultaneously.

INITIAL COSTS = First costs or capital investment of the system. A base price of the combined-cycle system is set such as $315 per kW.

FUEL COSTS = Equivalent capital investment of Fuel LCC

FAIL/MAINT COSTS = Equivalent capital investment of downtime costs and maintenance costs.

NON-VARIABLE COSTS = All costs which do not vary with alternatives proposed are eliminated from the tradeoff analysis. For our purposes, these costs are not needed. As the tradeoff proceeds to later phases, constant costs will become variables as needs for reliability decisions arise.

The LCC fuel costs are calculated by the following equation:

$$\text{LCC FUEL COSTS} = \frac{(P)(HR)(FC)(SF)(L)(8760)(R)}{1000}$$

Where:

P = Equivalent capital investment factor for fuel costs. Since general inflation is estimated as six percent and an additional fuel cost escalation is estimated as two percent then P = .45 for fuel (nominal value).

HR = Heat rate - Btu/kWh (Based on HHV)

FC = Fuel price - $\$/10^6$ Btu - For a unit which goes commercial in 1989, fuel prices were estimated by EPRI as \$4.00 and $\$3.58/10^6$ Btu for #2 distillate and #6 residual fuels, respectively, when stated in 1980 dollars.

R = Rating - MW

SF = Service factor - use factor - ratio of fired hours (service hours) to period hours.

L = Useful life 30 Years

The failure and maintenance costs are calculated by the Reliability Model by the following three equations. The model is additive within the hardware system in terms of failure rates (λ) and LCC (\$). For higher level hardware groupings the maintenance parameters are averages. The lowest level hardware line items in the reliability model represent analytical inputs. The first two of these costs combined represent maintenance costs, excluding spare parts initial capital investment:

$$\text{LCC LABOR} = P\,\lambda\,L\,(MMH)\,(MMHC)$$

$$\text{LCC MATERIALS} = P\,\lambda\,L\,(MATL)$$

$$\text{LCC DOWNTIME} = P\,\lambda\,L\,(DT)(DTC)(R)$$

\$MAINT. COSTS

Where:

P = equivalent capital investment factor for failure and maintenance costs. Since general inflation is estimated as six percent, then P = .35 for F&M costs (nominal value).

λ = failure (or maint. event) rate - inverse of MTBF (mean time between failure). Units are events/Gas Turbine unit year (dependent on given usage rates of fired hours/unit year and starts/unit year).

L = System useful life - 30 years.

MMH = Average No. of maintenance manhours per event.

MMHC = Average maintenance cost - $24/man hour (incl. technical direction).

MATL = Average Material cost per event (incl. off-site repair labor and parts).

R = Rating - MW

DT = Average no. of downtime hours per event.

DTC = Average downtime cost. For forced outages DTC = $10/MWh (nominal 1978 value for STAG base and mid-range). For scheduled outages DTC = $5/MWh (nominal 1978 value for STAG base and mid-range). Downtime cost constituents are a reserve cost estimate and an additional energy cost estimate. These estimates were calculated on the basis of the failure definitions, duty cycle definition, and time to repair distributions prior to the use of the power cost equation.

The downtime cost parameter is the utility system reliability cost-oriented parameter which can be set equal to that provided by the power cost formula, if that is determined expedient, thus enabling us to use the more simple and visable programmed LCC analysis in future design-oriented reliability cost trade-offs. Of most importance, however, is the need for customers to be cognizant of, and agreeable to, values used. Thus, they will purchase the more optimum designed machine rather than rejecting it in favor of one with an advantage in the more visible initial and fuel costs.

VALIDITY ASSESSMENT

The validity of the LCC math model almost always exceeds the validity of input parameters. The most critical inaccuracies are judged to lie in the failure rate estimates. It is emphasized that as more is learned, input parameters are expected to change, which may in turn result in improved decisions.

ANALYTICAL OUTPUTS

Standard outputs which are available from the computer without further computation are as follows for any hardware line item (or assembly) listed in the reliability model matrix:

- Failure Rates (λ_{FO}, λ_{SO}) - Events/Unit year
- Maintenance Man hours (MMH_{FO}, MMH_{SO}) = Hours/Event
- Materials Cost ($MATL_{FO}$, $MATL_{SO}$) = $/Event
- Downtime (DT_{FO}, DT_{SO}) = Hours/Event
- LCC Maint - $/Unit
- LCC Matl. - $/Unit
- LCC Downtime - $/Unit
- LCC F&M Total - $/Unit

Standard parameters which are calculated for the total gas turbine combined-cycle power plant for input to the power cost formula are as follows:

- Availability - percent
- Forced outage rate (EPRI) - percent (EPRI Technical Assessment Guide Supplement No. 1 Formula)
- Maintenance labor and materials cost - mills/kWh

Blank

APPENDIX B

Supplement No. 1 to the EPRI Technical Assessment Guide

Economic Premises for
ELECTRIC POWER GENERATING SYSTEMS
Complete Plant
Utility Financing
(Reference Date: November 1, 1978)

A. CAPITAL INVESTMENT BASIS (An example format for presenting the cost is presented in Table B.1.)

1. Total Plant Investment The total plant investment is the sum of:

(a) Process (or On-Site) Capital
(b) General Facilities (or Off-Site) Capital
(c) Engineering and Home Office Fees
(d) Project Contingency
(e) Process Contingency

These items are discussed below.

Process Capital

Process capital is the total constructed cost of all on-site processing and generating units, including all direct and indirect construction costs. All sales taxes should be included. When possible, the process capital costs should be broken down by major plant section (e.g., fuel storage, combustion system, emissions control systems, generators). The specific section breakdown should be agreed upon with the EPRI project manager. Also, if possible, the contractor should provide a breakdown of the total process capital into factory materials, field materials and field labor.

General Facilities or Offsite Capital

The capital cost of the off-site facilities is to be given explicitly in the report. The off-site facilities include roads, office buildings, shops, laboratories, etc., and generally are in the range of five to 20 percent of the on-site capital cost. Fuel, chemical, and byproduct storage systems are to be included in the on-site capital costs and are not part of the off-site facilities. The cost basis for the off-sites will be established by the contractor with the concurrence of the EPRI project manager. Sales taxes should be included where applicable.

Engineering and Home Office Overhead Including Fee

The contractor will include an estimate of the engineering and home office overhead and fee that are considered representative of this type of plant. These fees may be included in the process capital and general facility capital costs if the contractor's cost-estimating system incorporates estimates of these fees as a part of the equipment costs. The capital cost summary tables must indicate where these fees have been included (10 to 15% of the process capital is typical for these fees).

Project Contingency

A capital cost contingency factor should be developed by the contractor for each major section of the plant. This is a project contingency factor that is intended to cover additional equipment or other costs that would result from a more detailed design of a definitive project at an actual site. Table B.3 presents guidelines for relating the project

contingency to the level of design/estimating effort. Thus, by specifying the project contingency, the level of design/estimating effort can be defined. The contingency factors developed for each plant section should be explicitly shown in the report.

Process Contingency

This is a capital cost contingency applied to new technology in an effort to quantify the uncertainty in the design and cost of the commercial-scale equipment. The following guidelines are provided to aid in assigning process contingency allowances to various sections of the plant.

State of Technology Development	% of Installed Section Cost
New concept with limited data	25% and up
Concept with bench-scale data available	15%-25%
Small pilot plant data (e.g., 1 MW size) available	10%-15%
A full-size module has been operated (e.g., 20-100 MW)	5%-10%
The process is used commercially	0%-5%

The process contingency should be shown separately for each major plant section.

2. Total Capital Requirement

The total capital requirement for a regulated utility includes all capital necessary to complete the entire project. These items include:

(a) Total Plant Investment
(b) Prepaid Royalties
(c) Preproduction (or startup) Costs
(d) Inventory Capital
(e) Initial Chemical and Catalyst Charge
(f) Allowance for Funds During Construction (AFDC)
(g) Land

These items are discussed below.

Total Plant Investment — Defined in Item 1, above.

Paid-up Royalties — See Table B.2 for definition.

Preproduction Costs — The preproduction costs are intended to cover operator training, equipment checkout, major changes in plant equipment, extra maintenance, and inefficient use of fuel and other materials during plant startup. The preproduction costs are estimated as follows:

(a) One month fixed operating costs (Fixed operating costs are operating and maintenance labor, administrative and support labor, and maintenance materials.)

(b) One month of variable operating costs at full capacity excluding fuel (There variable operating costs include chemicals, water, and other consumables and waste disposal charges.)

(c) 25 percent of full capacity fuel cost for one month (This charge covers inefficient operation that occurs during the startup period.)

(d) 2 percent of total plant investment (This charge covers expected changes and modifications to equipment that will be needed to bring the plant up to full capacity.)

Inventory Capital

The value of inventories of fuel, other consumables, and byproducts is capitalized and included in the inventory capital account. The inventory capital is estimated as follows:

(a) One month supply of fuel based on full capacity operation

(b) One month supply of other consumables (excluding water) based on full capacity operation

Initial Catalyst and Chemicals Charge

The initial cost of any catalyst or chemicals that are contained int he process equipment (but not in storage, which is covered in inventory capital) is to be included.

Allowance for Funds During Construction (AFDC)

An AFDC charge is computed based on the time period from the center of gravity (cg) of expenditures until the plant is in commerical operation. The interest rate is eight percent per year. The AFDC is then calculated from the total plant investment (TPI) as shown below.

$$AFDC = (1.08)^{cg} - 1 \quad (TPI)$$

Numerical Example

TPI = $100

cg = 2 years

$$AFDC = (1.08)^{2} - 1 \quad (100) = \$16.6$$

The center of gravity time period (cg) is to be estimated by the contractor. Representative centers of gravities for several types of power plants are shown in the following table:

Type of Plant	Total Design-Construction Time	cg
Pulverized Coal Fired (1000 MW)	5 years	2 years
Oil Fired Combined Cycle (500 MW)	3 years	1 year
Combustion Turbine Unit (75 MW)	2 years	0.5 year

Since the AFDC charge is to be expressed in the same year dollars as the total plant investment, cost escalation (inflation) is not included.

Table B.4 gives an example of an AFDC calculation based on a construction cash flow schedule.

Land

Land Costs are site-specific and variable. See Table B.2 for a land cost.

B. CAPACITY FACTOR

For EPRI evaluation purposes the following capacity factors (CF) are suggested as design values.

Type of Plant	Design Capacity Factor
Base	70%
Intermediate	30%
Peaking	10%

The design capacity factor for this study is given in Table B.2. The CF is assumed to be constant over the life of the plant (i.e. levelized)

C. OPERATING COST BASIS

The operating costs are to be estimated on a first year basis. The costs will also be presented on a 30-year levelized basis (details are given in the following section).

The operating costs are divided into fixed and variable costs. The fixed costs are essentially independent of capacity factor and are generally expressed in $/kW-yr. The variable costs are directly proportional to the amount of power produced and are generally expressed in mills/kWh.

1. Fixed Operating Costs

Fixed operating costs include the following:

(a) Operating Labor
(b) Maintenance (may also have a variable component)
(c) Overhead Charges

These items are discussed below.

Operating Labor

The contractor will estimate the number of operating jobs (OJ) that are required to operate the plant. Ther operating labor charges (OLC) are then computed using the average labor rate (ALR) as follows:

$$OLC = \frac{(OJ) \times (ALR) \times (8760\ hr/yr)}{(\text{Full capacity of plant in kW})}$$

The average labor rate includes payroll burden and is given in Table B.2.

Maintenance Costs

Annual maintenance costs for new technologies are often estimated as a percentage of the installed capital cost of the facilities. The percentage varies widely depending on the nature of the processing conditions and the type of design. Maintenance costs in the ranges shown below are representative.

Type of Processing Conditions	Maintenance % of Process (or offsite) Capital Cost/Yr
Corrosive and abrasive Slurries	6.0 - 10 (& higher)
Severe (solids, high pressure & temperature)	4.0 - 6 (& higher)
Clean (liquids and gases only)	2.0 - 4
Off-site facilities & steam/electrical systems	1.5

The maintenance costs will be developed by the contractor with concurrence of the EPRI project manager.

The maintenance costs should be separately expressed as maintenance labor and maintenance materials. A maintenance labor/materials ratio of 40/60 may be used for this breakdown if other information is not available.

Overhead Charges

The only overhead charge included in the power plant studies is a charge for administrative and support labor, which is taken as 30 percent of the operating and maintenance labor.

General and administrative expenses are not included.

2. Variable Operating Costs

Consumables

Variable operating costs includes fuel, water, chemicals, waste disposal, etc. The first year values to use for these items are given in Table B.2.

Variable Maintenance

A variable component of the maintenance cost should be included if there is a basis for estimating how maintenance costs vary with capacity factor.

3. By-product Credits

By-product credits (if any) are based on values given in Table B.2.

4. Levelized Operating Costs

Inflation will tend to increase the operating costs (in current dollars) over the life of the plant. In EPRI analyses, a long-term inflation rate of six percent per year is assumed in estimating the cost of capital (discussed in a following section) and in estimating the life cycle revenue requirements

for other expenses. To represent these varying revenue requirements for fixed and variable costs (including fuel), a single "levelized" value is computed using the "present worth" concept of money. Based on the following assumptions,

Inflation rate = 6%/year
Discount rate = 10%/year

The 30-year levelization factor (LF) for operating and maintenance (O&M) costs (excluding fuel) is 1.886 (see Chapter V of the EPRI Technical Assessment Guide (TAG) for further detail).

30-year levelized O&M = 1.886 x (1st year O&M)

The 30-year LF for fuel is given in Table B.2.

D. COST OF CAPITAL

The cost of capital is based on an assumed six percent per year inflation rate and the following assumptions:

Debt/Equity Ratio	50/50
Debt Cost	8%/yr
Preferred Stock Ratio	15%
Preferred Stock Cost	8.5%/yr
Common Stock Ratio	35%
Common Stock Cost	13.5%/yr
Weighted Cost of Capital	10%/yr
Federal + State Income Tax Rate	50%
Property Taxes and Insurance	2%/yr
Investment Tax Credit	0
Book Life	30 yr
Tax Life	20 yr
Iowa Type S_1 Retirement Dispersion	

The 30-year levelized fixed charge rate (LFCR) calculated from the above assumptions is 18 percent per year. For more information see Chapter V of the Technical Assessment Guide (TAG).

Levelized Fixed Charges (30-Year Plant)

The levelized fixed charges (LFC) are based on the total capital requirement (TCR) and are computed as follows:

$$LFC = \frac{(LFCR)\ (TCRO}{(\text{plant size in kW})} = \$/kW\text{-}yr$$

Where LFCR = 0.18

Levelized Fixed Charges (Interim Replacement)

If major portions of the plant have short life (5-10 years), and would have to be capitalized as interim replacements, a fixed charge rate consistent with the shorter life must be applied to these capital items. The contractor should obtain the proper fixed charge rate in this case from the EPRI project manager.

E. BUSBAR POWER COST

The cost of electricity from a power plant is not a single value but varies with the plant capacity factor. Therefore, the power costs should be presented in the form of a "Power Cost Sensitivity Curve" plot as defined below.

Power Cost Sensitivity Curve

Vertical axis = cost of electiricity (mills/kWh)

Horizontal axis = capacity factor (0 to 100 percent)

30-year levelized costs are used. An example is shown in Figure B.1. The contractor will prepare this curve for the power generation option being evaluated.

The range of capacity factors for which the design/cost estimate are reasonable valid should be represented by a solid curve. A dashed curve can be used to indicate the cost trends outside the design range.

Numerical Power Cost

For convenience of discussion, a levelized busbar cost of power for the design capacity factor (the value of which is given Table 2) will be calculated using the 30-year levelized fixed charges, O&M charges, and fuel charges. The format for this cost calculation is shown in Table B.1.

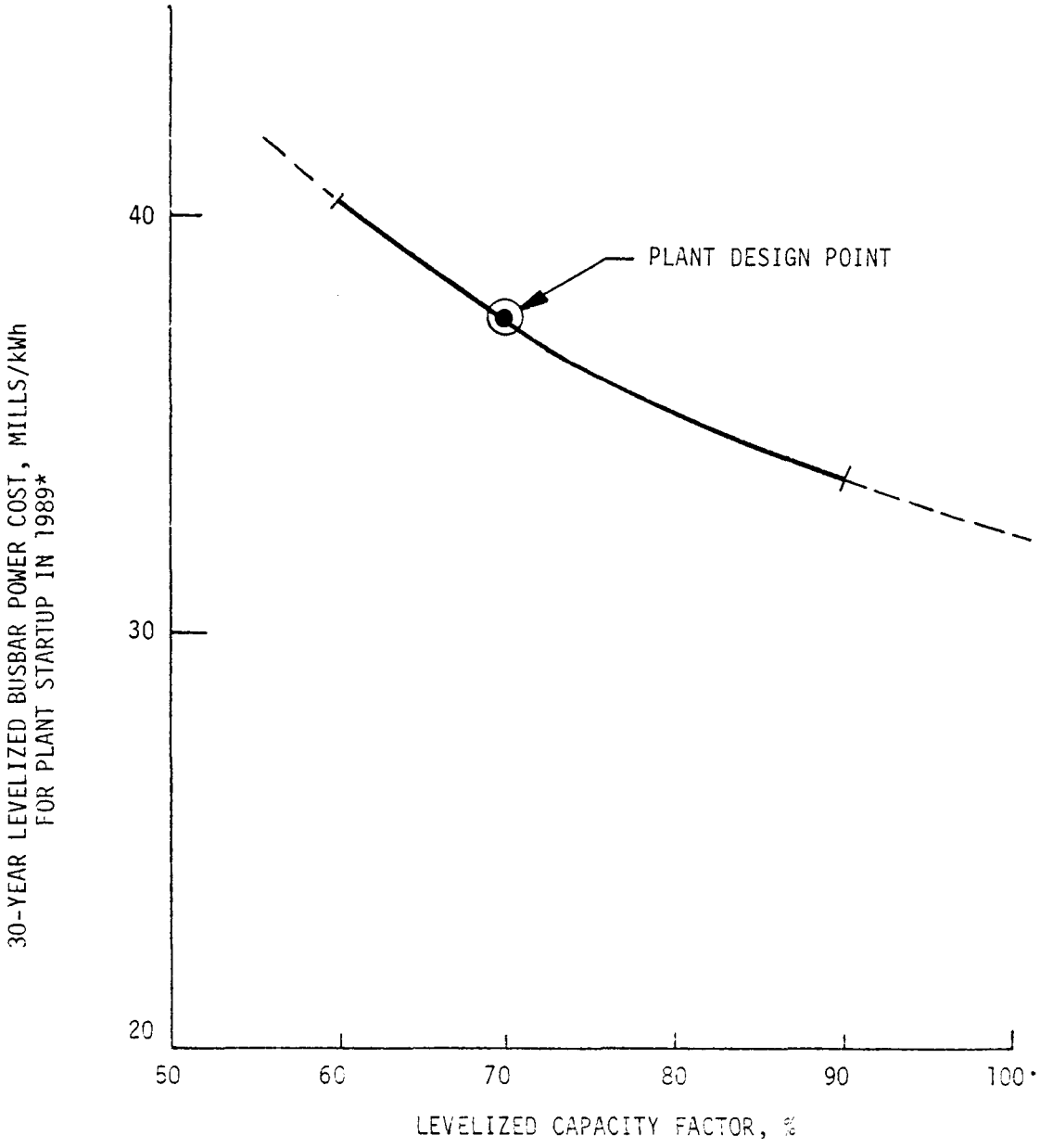

Figure B.1: Sensitivity of Power Cost to Changes in Capacity Factor

*First year costs expressed in 1989 dollars. To determine costs in 1980 dollars, divide levelized costs by $(1.06)^9 = 1.69$.

Table B.1

Example Format for Capital Investment and Revenue Requirement Summary Tables

Title

Plant Capacity, Fuel Type, Etc.

Capital Investment (year $)	$/kW
Process Capital*	A
General Facilities	B
Engineering and Home Office Fees	C
Project Contingency	D
Process Contingency	E
Sales Tax**	F
Total Plant Investment	TPI = A+B+C+D+E+F
Royalty Allowance	G
Preproduction Costs	H
Inventory Capital	I
Initial Catalyst and Chemicals	J
AFDC	K
Land	X
Total Capital Requirement	TCR = TPI+G+H+I+J+K+X

Fixed Operating Costs (First Year)	$/kW-yr
Operating Labor	L
Maintenance Labor	M
Maintenance Materials	N
Administrative and Support Labor	P = 0.3 (L+M)
Total Fixed O&M First Year	FOM = L+M+N+P

* Show sales tax here if not already included in A and/or B.

** A detailed breakdown of the process capital by plant section should be presented in a separate table.

Table B.1 (Continued)

Variable Operating Cost Excluding Fuel (First Year)		
	Mills/kWh	
Water	Q	
Chemicals	R	
Other Consumables	S	
Waste Disposal	T	
Variable Maintenance (if known)	U	
Total Variable (excluding fuel, first year)	VOM = Q+R+S+T+U	
Byproduct Credits (First Year)	V	
Fuel Cost (First Year)	W	
30-Year Levelized O&M Costs	Equations	
30-year Levelized Fixed O&M	LFOM = 1.886x(FOM)	$/kW-yr
30-year Levelized Variable O&M (excl. fuel)	LVOM = 1.886x(VOM)	mills/kWh
30-year Levelized Byproduct Credit	LB = Z* x V	mills/kWh
30-year Levelized Fuel	LFU = Y** x W	mills/kWh
30-Year Levelized Fixed Charges (Capital)	LFC = 0.18x(TCR)	$/kW-yr

30-Year Levelized Busbar Cost of Power at Levelized-Capacity Factor (CF)

$$\text{Power Cost} = \frac{(\text{LFC} + \text{LFOM})\ 1000\ \text{mills}/\$}{(\text{CR})\text{x}(\text{CF})\text{x}(8760\ \text{hr/year})} + \text{LVOM} - \text{LB} + \text{LFU mills/kWh}$$

where $\text{CR} = \frac{C_{eff}}{C_{np}}$ = Capacity Ratio

C_{np} = Name Plate Rated Capacity (MW) for NEMA Standards (80°F at 1000 ft. alt.)

C_{eff} = Effective Capacity = $c\text{-}m \ln((1-r) + re^{c/m})$

r = Forced Outage Rate = $\frac{\text{FOH} + \text{MOH}}{\text{FOH} + \text{AH}}$

$c = C_{np}$ (At the NEMA Standard)

FOH = Forced Outage Hours

MOH = Maintenance Outage Hours

AH = Available Hours

* Z is the 30-year levelization factor for byproducts given in Table 2.

** Y is the 30-year levelization factor for fuel given in Table 2.

Table B.2

Economic Variables (Reference Date 11/1/78)
For EPRI RP1187 Combined Cycle Projects

Dollars To Be Expressed in 1980 and 1989 Dollars (Year of Commercialization = 1989)

Utility System Characteristic, m, Perform Sensitivity Study for Values = 100, 500, 1000

Capacity Factor, CF, Perform Sensitivity Study

for values = 0.7, and $A_E - \frac{RSH}{PH}$

where A_E = Equivalent Availability = $\frac{S_E + RSH}{PH}$

S_E = Equivalent Service Hours = $\frac{\text{MWhr Delivered}}{C_{np}}$

Capital Investment Items

Paid-up Royalties: 0.5% of Process Capital

Operating Labor (Mid-1980 $)

First Year: $14.05/person hour (This labor rate is based on a 1978 direct labor charge of $9.25/hr plus a 35% payroll burden).

Labor Inflation Rate: 6%/year

Purchased Materials (Delivered Cost), East Central Region
(1989 Fuel Prices Expressed in 1980 Dollars)

	Mid-1980 $	Price Escalation Rate/Yr (Including Inflation)	30-Year Levelization Factor (LF)
Distillate (#2) Oil (0.3-0.5% Sulfur)	4.00 $/10^{6}Btu	8.12%	2.463
Residual Oil (0.3-0.5% Sulfur)	3.82 $/10^{6}Btu	8.12%	2.463
Residual Oil (1% Sulfur)	3.58 $/10^{6}Btu	8.12%	2.463
Residual Oil (>1% Sulfur)	3.23 $/10^{6}Btu	8.12%	2.463
Water (River)	0.45 $/10^{3}gal[a]	6.00%	1.886
Disposal Charges			
Sludge	$9.55/ton (dry basis)	6.0%	1.886
Dry, Granular Solids	$4.49/ton	6.0%	1.886
Waste Water	(waste water treating costs to be included in plant capital and O&M)		

Byproduct Credits = 0.0

Land Cost $5618/acre

(a) This is a raw water acquisition charge only. Intake structures, treating, and pumping costs are to be included in plant capital and O&M.

Table B.3

Design and Cost Estimate Classifications

ITEM	DESIGN/ ESTIMATE DESCRIPTION	PROJECT CONTINGENCY RANGE	DESIGN INFORMATION REQUIRED	COST ESTIMATE BASIS		
				MAJOR EQUIPMENT	OTHER MATERIALS	LABOR
Class I	Simplified	20% to 30%	General Site Conditions, geographic location & plant layout. Process flow/operation block diagram. Product output capacities.	By overall project or section-by-section based on capacity/cost graphs, ratio methods, and comparison with similar work completed by the contractor, with material adjusted to current cost indices and labor adjusted to site conditions.		
Class II	Preliminary	15% to 20%	As for Type Class I plus engineering specifics, e.g.: Major equipment specifications. Preliminary P&I flow diagrams.	Recent purchase costs (including freight) adjusted to current cost index.	By ratio to major equipment costs on plant parameters	Labor/material ratios for similar work, adjusted for site conditions and using expected average labor rates.
Class III	Detailed	10% to 15%	Complete process design. Engineering design usually 20% - 40% complete. Project construction schedule. Contractual conditions & local labor conditions. Actual site defined.	Firm quotations adjusted for possible price escalation with some critical items committed. Pertinent taxes & freight included.	Firm unit cost quotes (or current billing costs) based on detailed quantity take-off.	Estimated man-hour units (including assessment) using expected labor rate for each job classification.
Class IV	Finalized	5% to 10%	As for Class III - with engineering essentially complete.	As for Class III - with most items committed.	As for Class III - with material on approximately 100% firm basis.	As for Class III - some actual field labor productivity may be available.

Table B.4

Example of AFDC Calculation from the Construction Period Cash Flow

Example

Total Plant Investment (TPI) = \$100 (year 1 \$)

Construction Expenditure Schedule (Assumed)

Year	\$ (year 1 \$)
1	5
2	15
3	30
4	35
5	15

Assuming expenditures are uniform over a given year, the effective interest rate for the first year is 1/2 the annual interest rate. (Using annual end-of-year compounding)

Annual Interest Rate = 8%

Calculation of AFDC

$$
\begin{aligned}
5 \times (1.04)(1.08)^4 &= 7.07 \\
15 \times (1.04)(1.08)^3 &= 19.65 \\
30 \times (1.04)(1.08)^2 &= 36.39 \\
35 \times (1.04)(1.08) &= 39.31 \\
15 \times (1.04) &= 15.60 \\
\text{Total (TPI + AFDC)} & \quad 118.02
\end{aligned}
$$

$$\text{Center of Gravity (cg)} = \frac{\log \frac{\text{AFDC}}{\text{TPI}} + 1}{\log (1.08)}$$

$$\text{cg} = \frac{\log \frac{18.02}{100} + 1}{\log (1.08)} = 2.15 \text{ years}$$

Therefore, 2.15 years is the center of gravity (cg) for the construction expenditure schedule shown above.