CONF-901007--5

UCRL-JC--103938

DE91 000791

The Cascade ICF Reactor with an X-ray and Debris Shield and a Heavy-Ion Driver

John H. Pitts
Max Tabak

This paper was prepared for submittal to
Ninth Topical Meeting
on the Technology of Fusion Energy
Oak Brook, Illinois
October 7-11, 1990

Received by OSTI
OCT 15 1990

September 28, 1990

Lawrence Livermore National Laboratory

This is a preprint of a paper intended for publication in a journal or proceedings. Since changes may be made before publication, this preprint is made available with the understanding that it will not be cited or reproduced without the permission of the author.

DISTRIBUTION OF THIS DOCUMENT IS UNLIMITED

DISCLAIMER

This document was prepared as an account of work sponsored by an agency of the United States Government. Neither the United States Government nor the University of California nor any of their employees, makes any warranty, express or implied, or assumes any legal liability or responsibility for the accuracy, completeness, or usefulness of any information, apparatus, product, or process disclosed, or represents that its use would not infringe privately owned rights. Reference herein to any specific commercial products, process, or service by trade name, trademark, manufacturer, or otherwise, does not necessarily constitute or imply its endorsement, recommendation, or favoring by the United States Government or the University of California. The views and opinions of authors expressed herein do not necessarily state or reflect those of the United States Government or the University of California, and shall not be used for advertising or product endorsement purposes.

THE CASCADE ICF REACTOR WITH AN X-RAY AND DEBRIS SHIELD AND A HEAVY-ION DRIVER*

JOHN H. PITTS
Lawrence Livermore National Laboratory
P.O. Box 5508
Livermore, CA 94550
(415) 422-5327

MAX TABAK
Lawrence Livermore National Laboratory
P.O. Box 5508
Livermore, CA 94550
(415) 423-4791

ABSTRACT

The use of a 1-kg solid-lithium x-ray and debris shield around each fusion fuel pellet prevents vaporization of, and destructive shock waves in, the Cascade blanket granules thereby increasing their lifetime. The shield vaporizes as it absorbs energy and the vapor flows into the blanket several centimeters. The shield also increases tritium breeding and enhances vacuum pumping of high Z materials that are vaporized in the fuel pellet. Using heavy ion beams allows illumination of the fuel pellets with the restricted geometry present in Cascade. We used a 5 MJ driver with 18 beams (one 3 x 3 array from each end).

INTRODUCTION

The Cascade inertial-confinement-fusion (ICF) reactor,[1] shown in Figure 1, rotates at 50 rpm and is made of low-activation ceramic materials. A 1-m-thick renewable blanket, made of 1-mm-diameter carbon and $LiAlO_2$ granules, flows through the reactor and is held against the wall by the rotation. The blanket absorbs energy from fusion reactions that occur in the center of the reactor at 5 Hz, transfers this energy to 5-MPa helium gas in heat exchangers external to the reactor for eventual conversion to electric power, protects the wall from damaging fusion neutrons, and breeds tritium to replace that burned in the fusion reactions. Cryogenic fuel pellets, each surrounded by a 1-kg solid-lithium x-ray and debris shield, are injected at ~50 m/s. The shields contain two holes so that the fuel pellets can be illuminated by heavy-ion beams passing through the ends of the reactor. Each fuel pellet yields 375 MJ of energy.

All of the short-range x-ray and ion-debris energy, and some of the neutron energy (a total of about one-third of the yield), is deposited in the shield. Both the fuel pellet and the shield vaporize, and the resulting high pressure accelerates the vapor radially outward toward the granular blanket. The vapor arrives at the inside surface of the blanket after ~0.3 ms.

If the inside surface of the blanket were impermeable, the vapor would stagnate. In this case, LASNEX[2] calculations show that 30 MJ of energy would be deposited at the inside surface over ~60μs before the vapor rebounded back toward the center. This energy-deposition time is nearly 4 orders of magnitude longer than the 10-ns deposition time without a shield, and it allows the energy deposited at the surface of the granules to be conducted into the granules without their reaching the vaporization temperature of 3640 K. Blanket vaporization that would occur without a shield is eliminated. Destructive shock waves that would result if granule vaporization occurred do not develop. Granule lifetime is increased.

The speed of the vapor that rebounds from the surface of the blanket decreases with time, and the vapor becomes more uniformly distributed throughout the void space in the reactor. Subsequent energy pulses resulting from further rebounds of the vapor on the blanket inside surface do occur, but their magnitude is small and their energy can also be conducted into the granules without their reaching the vaporization point.

In fact, the granular blanket is permeable. Most of the vapor penetrates a few centimeters into the blanket (see Figure 2) while the remaining vapor is stagnated at the blanket surface. The surface area available for heat transfer is at least an order of magnitude larger than for an impermeable blanket. Heat conduction into the granules is rapid, and the temperature of the vapor reaches that of the granules within a millisecond or so. During the remainder of the 200-ms interpulse time, the pressure of the vapor in the pores of the blanket is higher than that in the central cavity. The vapor now flows back out of the blanket, through the holes at the ends of the reactor, and is condensed on cooled plates outside the reactor. The energy in the vapor leaving the reactor is about 6% of the yield energy. The economics of converting the energy leaving with the vapor into

*Work performed under the auspices of the U.S. Department of Energy by Lawrence Livermore National Laboratory under Contract W-7405-Eng-48.

DISTRIBUTION OF THIS DOCUMENT IS UNLIMITED

MASTER

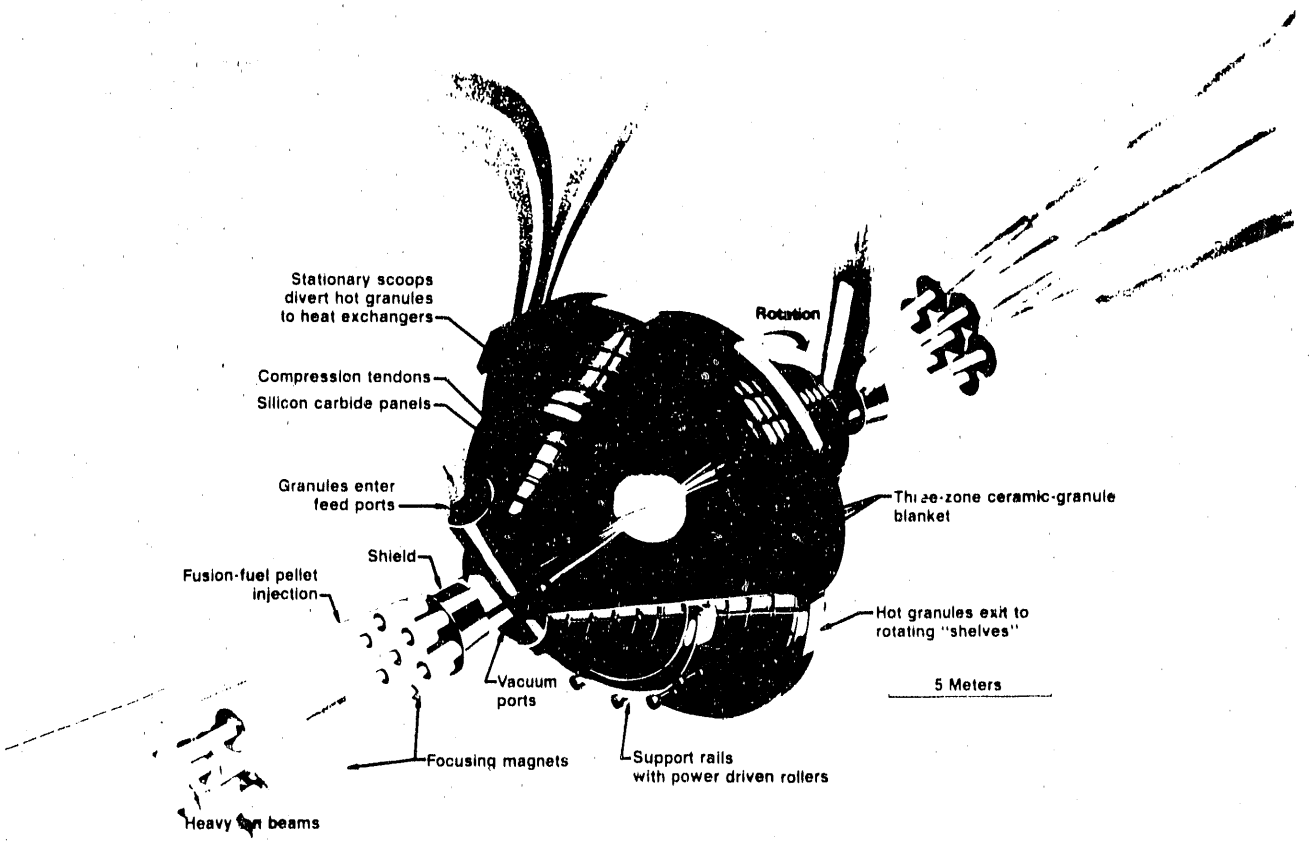

Figure 1. The Cascade rotating ceramic-granule-blanket reactor concept.

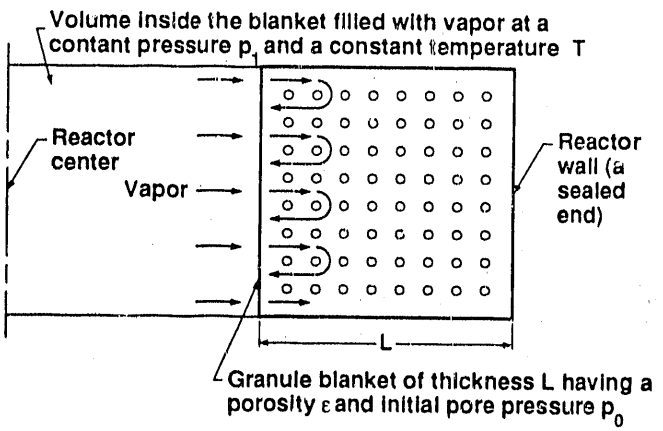

Figure 2. Schematic of the vapor flow into and back out of the granular blanket.

electric power has not been examined, and in fact it may be better to use this energy as process heat in a cogeneration mode than to produce electricity with it.

The shield has two additional advantages besides eliminating vaporization and destructive shock waves in the blanket. First, the solid lithium placed around the fuel pellet enhances tritium breeding.[3] A tritium breeding ratio slightly greater than unity can be reached using $LiAlO_2$ as a breeding material without including a BeO neutron multiplier. Second, the shield enhances vacuum pumping of high atomic number (high-Z) material, such as lead, that must have a 30 times lower pressure than lithium for heavy ion beam propagation in the high-vacuum ballistic-propagation mode. The mass of the lithium in the shield is 2500 times greater than that of the high-Z materials. The high-Z material is entrained with the lithium during the vacuum pumping. The total pressure that can be reached inside the reactor during the 200-ms interpulse time is roughly the same with or without a shield, but the partial pressure of the high-Z material reached with a shield is over 600 times less than without a shield. Hence, acceptable pressures for ballistic heavy-ion propagation can be reached with both the lithium and high-Z material.

We also switched from laser to heavy-ion beams for a driver because better coupling of driver energy to presently designed fuel pellets can be achieved with the restricted illumination geometry in Cascade.

VAPOR PENETRATION INTO THE GRANULAR BLANKET

We calculated the vapor penetration into the granular blanket using Morrison's model,[4] with the vapor assumed to be a constant-temperature (isothermal) perfect gas that does not condense. (In our case, the lithium remains a vapor at the temperatures of the blanket granules, so that the no-condensation assumption is valid.) Although the driving pressure calculated with LASNEX rises and falls in a bell-shaped fashion, we approximated this pressure as a constant 5 MPa for a time t = 10 μs.

Morrison developed a similarity variable, θ, given by

$$\theta = \frac{x}{2}\left[\frac{\varepsilon\mu}{k\,(p_1 - p_0)\,t}\right]^{1/2} \qquad (1)$$

Here, k is the permeability[5] of the granular material, equal to $6.5 \times 10^{-4} d^2$, where d is the diameter of the granules (1 mm). This gives $k = 6.5 \times 10^{-10}$ m². The pressure difference $p_1 - p_0$ is the driving pressure less the initial pore pressure, which for our case is 5 MPa. ε is the porosity, equal to ~0.4, and μ is the vapor viscosity,[6] equal to 1.37×10^{-5} Pa s for lithium vapor at the average 1500 K temperature of the carbon in the blanket. θ = 0.43 at the distance x into the blanket at which $p_1 - p_0$ is half the value at the blanket surface. $p_1 - p_0$ is zero at θ = 0.81, which is the value at the maximum extent of the vapor into the blanket. Equation (1) is valid until the vapor completely penetrates the blanket.

The result is that the pressure is half the driving vapor in the blanket (θ = 0.81) is at x = 12.4 cm, which is only 12.4% of the blanket thickness. Hence the solution is valid for our blanket thickness. With our assumption of isothermal flow of the vapor in the blanket, all the heat transfer occurs at the surface of the blanket, and the vapor flows inside at the temperature of the granules without further temperature change. If we had assumed that the flow was adiabatic, so that the vapor retained its energy, the corresponding values of x would have been 5.1 and 9.7 cm. The assumptions of isothermal and adiabatic flow bound the problem as far as heat transfer is concerned, so we conclude that the actual penetration of the vapor into the blanket is between the values of x calculated.

The surface area available for heat transfer from the vapor to the granules would be about that of the granules to a depth of between 5.1 and 6.6 cm (where $p_1 - p_0$ is half the driving pressure) unless the vapor reached the temperature of the granules beforehand. For our 1-mm-diameter granules, this surface area is 200 to 260 times that of a sphere at the inner radius of the blanket, which we used in LASNEX for radiation and electron-conduction heat transfer from the vapor to the granules. We therefore conclude that most of the heat transfer occurs at the surface of the granules inside the blanket as the vapor flows into and back out of the interstices. Furthermore, the temperature of the vapor leaving the blanket and exiting the reactor will be at a temperature of the blanket, or on an average about 1500 K.

VACUUM PUMPING

Several pressure regimes for the propagation of heavy-ion-beam energy to the fuel pellets have been studied.[7,8] The most probable regime is the so-called high-vacuum ballistic-propagation mode.[7] This regime is the most restrictive as far as vacuum pumping is concerned and requires pressures (at 1500 K) of less than 60 mPa for light elements such as lithium and less than 2 mPa for heavy elements such as lead. The equivalent number densities are 3×10^{12} and 1×10^{11} cm⁻³, respectively. It may be possible[7] to propagate heavy ions in a self-pinched mode at a much less restrictive pressure of ~7 kPa, but this regime is less likely to exist and remains to be examined experimentally.

We determined the pressures that could be reached between fusion pulses inside the Cascade reactor with and without the use of a 1-kg lithium shield. Table 1 compares the various parameters. We assumed that 0.4 g of lead would be representative[9] of the high-Z material present in each fuel pellet. This high-Z material dominates the vapor species if no shield is present. If a 1-kg shield is present, the lithium is the dominant vapor species.

In order to determine the flow regime, we calculated the mean free path λ using[10]

$$\frac{1}{\lambda} = 2^{1/2}\,\sigma N \qquad (2)$$

where σ is the collisional cross section,[11] equal to 1.5×10^{-19} and 3.8×10^{-19} m² for lithium and lead, respectively, and N is the number density (m⁻³). We took the lower pressure limit for viscous flow as that at which the diameter of the openings in the ends of the reactor (1.54 m) was 100 times the mean free path of the vapor atoms.[12] Molecular flow exists if the mean free path is less than the diameter of the openings; a mixture of viscous and molecular flow exists otherwise. Vacuum pumping is mostly in the viscous regime with a shield and mostly in the molecular regime without a shield.

With viscous flow, the pressure, p, that can be reached in a volume V within the interpulse time t is[12]

$$p \cong \frac{2V}{Et}, \qquad (3)$$

Table 1. Comparison of vacuum pumping parameters.

Parameter	Fuel pellet only	With a 1-kg lithium shield
Helium and hydrogen[a], g/s	0.032	0.032
Lead vapor, g/s	2	2
Lithium vapor, g/s	0	5000
Initial total pressure[b], Pa	0.15	1.1×10^4
Mean free path[c], m	0.25	8.8×10^{-6}
Flow regime	molecular	viscous
Final total pressure[d], Pa	0.057	0.038
Final partial pressure of lead[d], Pa	0.057	8.4×10^{-5}
Final partial pressure of lithium[d], Pa	0	0.038
Maximum allowed partial pressure of lead[e], Pa	0.002	
Maximum allowed partial pressure of lithium[e], Pa	0.06	

[e]For high vacuum ballistic heavy-ion propagation require.
[d]At 1500 K inside the reactor at the end of the 0.2-s interpulse time.
[c]At the initial pressure and 1500 K.
[b]Averaged throughout the reactor void space inside the blanket at 1500 K.
[a]Include deuterium and tritium.

where

$$E = \frac{2\pi D^4}{128\,\mu L}, \tag{4}$$

D is the diameter of the end openings, μ is the vapor viscosity[6] mentioned earlier, and L is the duct length, which we took equal to 1 m. Equation (3) assumes that the pumping speed of the vacuum pumps is high. In our case, all of the vapor except the hydrogens and helium is condensed immediately outside of the reactor and does not enter the vacuum system. The condensation plates can be made as large as required so that the effective pumping speed is high.

In the molecular regime, the pressure that can be reached is[12]

$$p = p_i\, e^{-ct/v}, \tag{5}$$

where p_i is the initial total pressure inside the reactor,

$$c = 38.1\left(\frac{T}{M}\right)^{1/2}\frac{D^3}{L}, \tag{6}$$

T is the vapor temperature (1500 K), and M is the vapor molecular weight. The use of condensation plates again results in a high pumping speed, so that the duct conductance calculated with Equation (6) is essentially the same as the effective pumping speed that includes the vacuum pumps. If no shield is used, we can reach a partial pressure of lead of 0.057 Pa, which is above the maximum allowed for heavy-ion-beam propagation in the high-vacuum ballistic-propagation mode.

If a shield is present, all vapors would mix together as long as viscous flow existed. The dominant vapor, lithium, entrains the other vapors, and all vapors flow out of the reactor together. The total pressure at the limit of viscous flow is about 1800 times lower than the initial pressure, so the partial pressure of the entrained gases would be reduced by a factor of ~1800 as the lithium vapor flows out of the reactor. The total pressure of vapor in the reactor is similar with or without a shield, but the partial pressure of lead at the end of the 0.2-s interpulse time is over 600 times lower with a shield (see Table 1). Hence, the use of the shield reduces the amount of lead vapor below the maximum allowed in the high-vacuum ballistic-propagation mode. Because the amount of lithium that can be tolerated is 30 times higher than the amount of lead, we can also reach an acceptable lithium pressure in the reactor.

A schematic of the vacuum system is shown in Figure 3. Only hydrogen and helium vapors reach the vacuum system because condensable vapors, i.e., lead and lithium, are removed by the condensation plates. The vacuum system[9] consists of an axial-flow

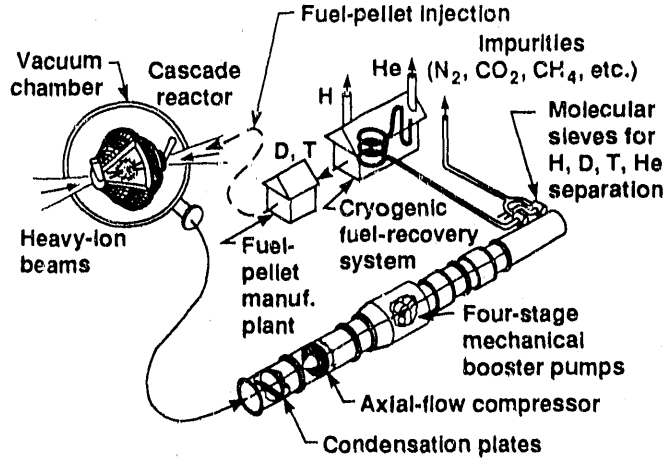

Figure 3. A mechanical vacuum system for pumping the hydrogens, helium and leno vapors are condensed before they enter the vacuum system.

compressor followed by mechanical booster pumps in series having a combined total of four stages. A fuel recovery system separates deuterium and tritium from hydrogen and helium. The former are recycled for use in manufacturing fuel pellets.

HEAVY-ION DRIVER

We prefer heavy-ion drivers over laser drivers because energy coupling to presently designed fuel pellets can be achieved with the restricted illumination geometries present in Cascade. We chose[13] mass-210 ions with charge state +1, accelerated to 10 GeV in an induction linear accelerator. We used 18 beams (one 3 x 3 array from each end) with a total peak power of 450 TW. The peak current is 2.5 kA per beam, and the focal spot radius is 0.24 cm. Total energy in the driver pulse is 5 MJ. Fuel pellet gain is 75, and the driver efficiency is 20%. Superconducting quadrupole magnets focus the beams. The last two focusing magnets, and associated shielding, are shown in Figure 4 (note that we consider 3 x 3 arrays here, where a circular cluster of 7 beams from each end is shown in Figure 1). We placed a 1-m-thick shield in front of the final magnet for protection against direct neutron exposure. Internal cooling would be needed for the shielding. If this shield is also used as a condensation plate for the vacuum system, condensed liquid would be present to protect the shield from short-range x rays and fuel-pellet debris. We also placed 1- to 3-cm-thick shielding between the beam and the inside radius of each magnet to reduce heating by scattered neutrons. The amount of shielding is only an estimate, and additional shielding may be required. The radius of the ion-beam cluster at the reactor wall is 540 mm, which is less than the 780 mm radius of the opening.

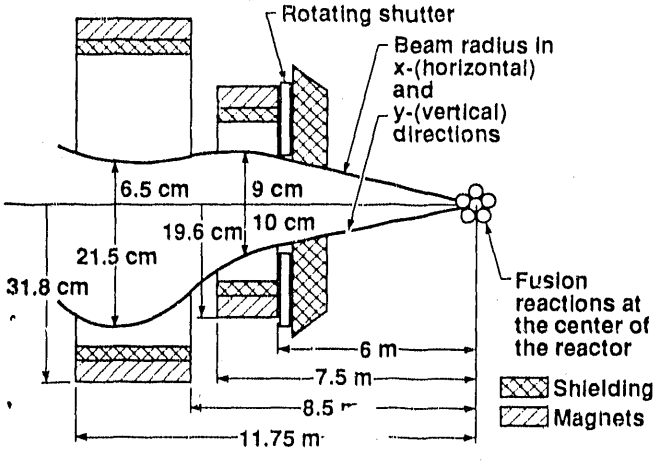

Figure 4. Shape of a heavy-ion beam and the last two magnets that focus the beam onto the center of the Cascade reactor.

CONCLUSIONS

The use of a 1-kg solid-lithium x-ray and debris shield around each fuel pellet eliminates vaporization and destructive shock waves in the blanket granules. The shield also increases tritium breeding and enhances vacuum pumping by entraining high-Z materials such as lead from the fuel pellet as it flows out of the reactor. Lithium and lead vapor pressures that allow propagation of heavy ions in the high-vacuum ballistic-propagation mode can be reached.

A heavy-ion driver with 18 beams (one 3 x 3 array from each end) can illuminate fuel pellets with the restricted geometry present in the Cascade reactor concept.

REFERENCES

1. J. H. PITTS, et al., "The Cascade Inertial Confinement Fusion Reactor Concept," Lawrence Livermore National Laboratory Report UCRL-LR-104546, to be published.

2. G. B. ZIMMERMAN and W. L. KRUER, "Numerical Simulation of Laser-Initiated Fusion," Comments Plas. Phys. 2 (2) (1975), p. 51.

3. M. T. TOBIN, "Adapting an X-ray/Debris Shield to the Cascade ICF Power Plant: Neutronics Issues," these proceedings. Available as Lawrence Livermore National Laboratory Report UCRL-JC-103939 (1990).

4. F. A. MORRISON Jr., "Transient Gas Flow in a Porous Column," Ind. Eng. Chem. Fundam. 11 (2) (1972), p. 191.

5. R. J. M. DeWEIST, "Flow Through Porous Media," Academic Press, New York, 1969, pp. 97-98.

6. N. B. VARGAFTIK, "Handbook of Physical Properties of Liquids and Gases," Hemisphere Publish. Co., Washington, D. C., 2nd. ed., 1975, p. 98.

7. C. L. OLSON, "HIF Transport Issues for $P > 10^{-3}$ Torr and $Z > 1$," AIP Conference Proc. 152: Heavy Ion Inertial Fusion, Washington, D. C., Am. Inst. Phys., New York, 1986, pp. 215-226.

8. A. B. LANGDON, private communication, Lawrence Livermore National Laboratory, 1990.

9. J. H. PITTS and H. G. PATTON, "Vacuum Pumping for Inertial-Confinement-Fusion Reactors," J. Vac. Sci. Technol. A 8 (3), 1990, pp. 3052-3057.

10. W. H. GIEDT, "Thermophysics," Van Nostrand Reinhold, New York, 1971, p. 524.

11. D. A. YOUNG, private communication, Lawrence Livermore National Laboratory, 1990.

12. A. ROTH, "Vacuum Technology," North Holland, Amsterdam, 1976, p. 76 and Sec. 3.7.

13. J H. PITTS, et al., "Cascade and HYLIFE ICF Reactor Concept Revisions," Proceedings, 16th Symposium on Fusion Tech., London, September 3-7, 1990, to be published. Available as Lawrence Livermore National Laboratory Report UCRL-JC-103337 (1990).

END

DATE FILMED

10 / 29 / 90