DOE/SF/15929-1
FSC-ESD-86-368-11

SURVIVABILITY ENHANCEMENT STUDY FOR C^3I/BM GROUND SEGMENTS

FINAL REPORT

Rec ... STI

OCTOBER 30, 1986

Prepared For:

UNITED STATES DEPARTMENT OF ENERGY
SAN FRANCISCO OPERATIONS OFFICE
1333 BROADWAY
OAKLAND, CALIFORNIA 94612

CONTRACT NO. DE-AC03-85SF15929

DO NOT MICROFILM
THIS PAGE

MASTER

FAIRCHILD
SPACE COMPANY
GERMANTOWN MARYLAND 20874-1181

DISTRIBUTION OF THIS DOCUMENT IS UNLIMITED

DISCLAIMER

This report was prepared as an account of work sponsored by an agency of the United States Government. Neither the United States Government nor any agency Thereof, nor any of their employees, makes any warranty, express or implied, or assumes any legal liability or responsibility for the accuracy, completeness, or usefulness of any information, apparatus, product, or process disclosed, or represents that its use would not infringe privately owned rights. Reference herein to any specific commercial product, process, or service by trade name, trademark, manufacturer, or otherwise does not necessarily constitute or imply its endorsement, recommendation, or favoring by the United States Government or any agency thereof. The views and opinions of authors expressed herein do not necessarily state or reflect those of the United States Government or any agency thereof.

DISCLAIMER

Portions of this document may be illegible in electronic image products. Images are produced from the best available original document.

DISCLAIMER

This report was prepared as an account of work sponsored by an agency of the United States Government. Neither the United States Government nor any agency thereof, nor any of their employees, makes any warranty, express or implied, or assumes any legal liability or responsibility for the accuracy, completeness, or usefulness of any information, apparatus, product, or process disclosed, or represents that its use would not infringe privately owned rights. Reference herein to any specific commercial product, process, or service by trade name, trademark, manufacturer, or otherwise does not necessarily constitute or imply its endorsement, recommendation, or favoring by the United States Government or any agency thereof. The views and opinions of authors expressed herein do not necessarily state or reflect those of the United States Government or any agency thereof.

DOE/SF/15929-1
FSC-ESD-86-368-11

SURVIVABILITY ENHANCEMENT STUDY FOR C^3I/BM GROUND SEGMENTS

FINAL REPORT

DOE/SF/15929--1

DE88 011554

OCTOBER 30, 1986

Prepared For:

UNITED STATES DEPARTMENT OF ENERGY
SAN FRANCISCO OPERATIONS OFFICE
1333 BROADWAY
OAKLAND, CALIFORNIA 94612

CONTRACT NO. DE-AC03-85SF15929

Prepared By:

FAIRCHILD SPACE COMPANY
FAIRCHILD INDUSTRIES
GERMANTOWN, MARYLAND

DISTRIBUTION OF THIS DOCUMENT IS UNLIMITED

Table of Contents

		Page
1.0	Foreword	1
2.0	Summary and Conclusions	2
3.0	Introduction	8
3.1	Background	8
3.2	Significance to SDI	9
3.3	Study Objective	13
3.4	Study Approach	14
4.0	C^3I/BM Systems	16
4.1	Status of SDI C^3I/BM Systems	16
4.2	Strategic Nuclear Command and Control System	19
4.2.1	Attack Warning/Attack Assessment System	19
4.2.2	Command and Decision-Making	21
4.2.3	Strategic Communications	22
4.2.4	Relevance to SDI C^3I/BM	24
4.3	NSEP Telecommunications System	28
4.3.1	NSEP Telecommunications Policy	29
4.3.2	NSTAC	31
4.4	Representative Telecommunications Systems	32
4.4.1	L-4 Transcontinental Cable	33
4.4.2	Microwave Repeater Stations	34
4.4.3	Satellite Ground Terminals	35
4.4.4	Low Frequency Radio Network	36
4.4.5	Optic Fiber Communications Systems	36
4.5	Postulated SDI C^3I/BM Systems	37

Table of Contents (continued)

		Page
5.0	Nuclear and Other Threats to the C^3I/BM Ground Segments	43
5.1	Direct Nuclear Threats	43
5.1.1	Blast Effects	44
5.1.2	Thermal Effects	52
5.1.3	Nuclear Radiation Effects	53
5.2	Collateral Nuclear Threats	63
5.2.1	Ionization Blackout	64
5.2.2	Electromagnetic Pulse	66
5.3	Non-Nuclear Threats	81
5.3.1	Electronic Countermeasures	81
5.3.2	Electronic Eavesdropping	82
5.3.3	Sabotage	83
5.3.4	Natural Disasters	84
5.3.5	Accidental Damage	85
6.0	Power Systems for C^3I/BM Ground Segments	86
6.1	Public Power System	86
6.2	Uninterruptible Power Supplies	87
6.3	Independent Power Supplies	92
6.4	Selection of Power Systems	94
7.0	Terrestrial Isotope Power Systems	98
7.1	Low-Powered RTGs	98
7.2	High-Powered RTGs	106
7.3	Dynamic Isotope Power Systems	111
8.0	Sr-90 Fuel Availability	129
8.1	Defense Wastes	130
8.2	Commercial Power Wastes	136

Table of Contents (continued)

		Page
9.0	Sr-90 Power System Costs	140
10.0	Model Applications of Hardened Isotope Powered C^3I/BM Sites	143
10.1	Hardened Fiber Optic Telecommunications Repeater Station	145
10.1.1	Siting	146
10.1.2	Equipment Vault	148
10.1.3	Repeater Station Equipment	151
10.1.4	Thermal Considerations	155
10.2	Hardened Remote Satellite Ground Terminal	157
10.2.1	Siting	160
10.2.2	Equipment Vault	162
10.2.3	Site Equipment	164
10.2.4	Thermal Considerations	166
10.3	Safety	168
11.0	Implementation Plan	172

List of Figures

Figure No.		Page
3.1	Survivable Communications Network	10
4.5	Postulated SDI C^3I/BM System	38
5.1.1-1	Minimum Distances from Ground Zero for Only Slight Damage to Small, Heavy, Well Designed Underground Structures	47
5.1.1-2	Peak Overpressure from Free Air Bursts for Sea-Level Ambient Conditions	49
5.1.2	Thermal Radiation Exposures at Ground Level	54
5.1.3-1	Typical Gamma Doses from Air-Burst Thermonuclear Weapons	57
5.1.3-2	Typical Neutron Doses form Air-Burst Thermonuclear Weapons	58
5.1.3-3	Rate of Decay of Fission Products after a Nuclear Explosion	61
5.1.3-4	Approximate Maximum Height of Burst for Appreciable Local Fallout	62
5.2.2-1	EMP Ground Coverage for High-Altitude Bursts at 100, 200, and 300 Miles	70
5.2.2-2	Variations in Electric Fields on Surface for High Yield Burst at 300 Miles Over Continental U.S.	72
5.2.2-3	High-Altitude Electromagnetic Pulse Waveshape	73
5.2.2-4	High-Altitude Electromagnetic Pulse Spectrum and Energy Density Spectrum	74
6.2	Static Uninterruptible Power System (UPS) Block Diagram	90
7.1-1	Schematic of Terrestrial Radioisotope Thermoelectric Generator (RTG)	100
7.1-2	Sentinel 25E Characteristics	107
7.1-3	Sentinel F Series Characteristics	108

List of Figures (continued)

Figure No.		Page
7.2-1	Exploded View of BUP-500 RTG	110
7.2-2	BUP-500 RTG in Shipping Container	112
7.3-1	Terrestrial Organic Rankine Isotope Power System	118
7.3-2	Sr-90 Organic Rankine Power System in Shipping/ Installation Container	126
8.0	Byproduct Recovery Sequence	131
8.2	Cumulative Inventory of Heat Source Grade Sr-90 Available for Recovery from High-Level Wastes	139
10.1.1	Hardened RTG-Powered Fiber Optic Cable Repeater Station	147
10.1.3-1	RTG Powered Fiber Optic Telecommunications Cable Repeater	152
10.1.3-2	Electronic Repeater Unit for Fiber Optic Telecommunications Cable	154
10.2	Hardened Satellite-To-Ground Segment	159
10.2.1	Isotope Powered Satellite Ground Terminal	161

List of Tables

Table No.		Page
5.2.1	Effects of Nuclear Detonations on Radio and Radar Systems	67
5.2.2	HEMP Threat Levels	80

1.0 FOREWORD

This report documents the results of the Survivability Enhancement Study for C^3I/BM Ground Segments, a part of the Department of Energy's New and Innovative Concepts Program in support of the Strategic Defense Initiative. This one-year study was performed by the Fairchild Space Company, Germantown, Maryland, a division of Fairchild Industries, under DOE contract DE-AC03-85SF15929.

The study was conducted under the technical direction of Joseph D. Krupa, FGS Division, San Francisco Operations Office, DOE. Dr.George Spillman, Los Alamos National Laboratory, was technical advisor to the program.

The principal investigator for this study program was Robert T. Carpenter, Energy Systems Department, Fairchild Space Company.

2.0 SUMMARY AND CONCLUSIONS

This study involves a concept developed by the Fairchild Space Company which is directly applicable to the Strategic Defense Initiative (SDI) Program as well as other national security programs requiring reliable, secure and survivable telecommunications systems.

The overall objective of this study program was to determine the feasibility of combining and integrating long-lived, compact, autonomous isotope power sources with fiber optic and other types of ground segments of the SDI communications, command, control and intelligence/battle management (C^3I/BM) system in order to significantly enhance the survivability of those critical systems, especially against the potential threats of electromagnetic pulse(s) (EMP) resulting from high altitude nuclear weapon explosion(s).

Cognizant government agencies, laboratories and/or contractors were contacted/visited and an extensive literature search was made to gather data on relevant C^3I/BM systems, plans and schedules; electronic/electro-optic telecommunications technologies; threat definitions; survivability and hardening approaches/needs; power requirements; and defense nuclear waste byproduct availability/costs. State of the art and projected compact power systems technologies were evaluated, compared and concepts selected or developed for the survivable power sources. Isotope heat source concepts utilizing byproducts from the DOE's defense wastes program were included. This information was used as a basis for selecting

representative applications which can best benefit from the use of integrated isotope power units.

Since the SDI C^3I/BM system studies had not yet progressed to where various ground segments had been defined, existing C^3I/BM systems were examined to determine the types of ground links being used or planned in order to postulate representative ground segments which would be useful in a survivable SDI C^3I/BM system.

Direct and collateral nuclear weapon effects on communications facilities/equipment were investigated along with mitigation guidelines and techniques which can be used to harden communications ground segments. Non-nuclear, including clandestine, threats important to an SDI C^3I/BM system were explored.

Almost all ground segments of current C^3I/BM systems are powered by the utility power grid. Weapon tests have shown that the power grid is the weak link in communications systems because of the vulnerability of overhead power transmission lines to nuclear blast wave effects, the potential for system outages due to insulator breakdown under nuclear irradiation, and the potential for collecting and conducting very large surges of EMP energy into communications facilities/equipment.

Normal disturbances in utility power, caused by weather, load switching, failures, etc., can cause malfunctions, alteration of data, and shutdown of modern telecommunications equipment. Therefore, power protection equipment is usually provided in the form of an uninterruptible

power source (UPS) and, in some cases, back-up generators. The UPS must be on-line to guard against power grid fluctuations, making it just as vulnerable to EMP surges as any communications equipment connected to the power grid. The UPS only has a limited battery/momentum energy reserve to maintain power to the system during grid power outages, so back-up generators are used to handle longer outages, until they use up their fuel supply. However, generator air/fuel/exhaust systems are hard to protect and difficult to integrate into a hardened, underground site. Compact, autonomous power sources with long endurance capabilities eliminate the power grid problems and the concerns of running out of power and having to conduct post-attack reconstitution activities in areas which might still be contaminated.

The status and availability of terrestrial isotope power systems were reviewed. Long-lived, Strontium-90 (Sr-90) fueled Radioisotope Thermoelectric Generators (RTGs) have been in use in remote terrestrial applications for over 25 years and have been demonstrated to be highly reliable and safe under the harshest of operating environments. Dynamic isotope power systems are technology-ready to be used for higher powered applications to make more efficient use of the isotope fuel. A conceptual design of a 1.5 kwe Sr-90 fueled Organic Rankine power system was developed to illustrate its application. The main concern with the use of large isotope power units in hardened C^3I/BM sites, especially in small, underground structures, is the removal of the heat under all normal and emergency conditions.

Two model applications of hardened isotope powered C^3I/BM sites were selected: (1) a fiber optic telecommunications cable repeater station powered by a Sr-90 fueled RTG, and (2) a remote satellite ground terminal powered by a Sr-90 fueled dynamic power system. One or the other of these two types of unmanned sites could apply to all ground segments of any SDI C^3I/BM system; therefore, they should be of great benefit to the SDI Program.

The underground, reinforced concrete structures used for these sites can withstand very high blast wave overpressures (100 psi or more), and provide shielding of the equipment from thermal, gamma, neutron and EMP radiations from nuclear weapon explosions. The primary features of these sites which greatly enhance their survivability over current C^3I/BM systems are their independence from the utility power grid, the use of dielectric fiber optic signal cables (and other non-conductive facility penetrations), and the use of compact isotope power units which can operate unattended for years without refueling or maintenance.

There is a natural match between fiber optic telecommunications cable technology and isotope power systems. The two provide a balanced hardness/security for the communications system by the small, buried, long-lived repeater stations, the immunity of the cables to EMP or jamming interference, and the security provided against eavesdropping or interception of the signals and sabotage. Due to the high communications capacity of individual fibers, only a small number of fibers is required per cable. This leads to the low power levels for the repeater stations, which are ideally suited to RTG power units. The much larger distances

permitted between fiber optic cable repeaters (compared to coax cable repeaters) mean that significantly fewer repeaters are required and more cable miles can be powered with a limited number of RTGs. Large repeater spacing also provides more flexibility in siting repeaters and routing cables where they can be protected. The lower installation costs of fiber optic cables tend to offset the higher initial costs of isotope power units, so that the system should exhibit a low life cycle cost, including very low operational/maintenance costs.

Large quantities of Sr-90 fuel will be produced as a byproduct of the DOE's defense materials production operations at Hanford (WA) and Savannah River (SC). A DOD requirement for the Sr-90 power units to be used in C^3I/BM systems would justify a DOE recovery/encapsulation operation which could produce up to 80 25-watt RTGs per year (enough for up to 4,800 miles of fiber optic cable) or eight 1.5 kwe power units per year for remote ground terminals. Much more Sr-90 could be recovered from commercial nuclear power wastes, if those wastes would be processed.

The DOE policy of supporting DOD requirements has been amply demonstrated over the years by the success achieved by the cooperative efforts of DOE's Defense Programs. Prototype development and demonstration of isotope power units, which beneficially use defense waste byproducts, for C^3I/BM applications is a normal type activity for the DOE and can be accomplished on a schedule consistent with SDI Program plans.

The overall conclusions of this study program are:

1. Many hardened ground segments will be required, in addition to satellite links, to assure the survivability of the SDI C^3I/BM system.

2. The use of isotope power systems and fiber optic telecommunications technology can significantly enhance the survivability of all SDI C^3I/BM ground segments.

3. The government can supply the isotope fuel in the quantities required, on a timely schedule, and at a cost consistent with the importance of the SDI program to implement this survivability enhancement approach.

3.0 INTRODUCTION

This section includes a brief discussion of the background activities at Fairchild which led to this study program; the study's significance to the Strategic Defense Initiative (SDI); the objective of the study program; and the approach that was followed in conducting the study effort.

3.1 Background

Fairchild Industries, as a member of the telecommunications industry, is represented on the President's National Security Telecommunications Advisory Committee (NSTAC). Several Fairchild companies, which provide telecommunications equipment or services, were participants in NSTAC working group or task force studies concerning the survivability of commercial telecommunications satellites and ground segments. Fairchild Space Company, with its combination of in-house interests and expertise in communications systems and space and terrestrial nuclear power systems, conducted some related company-funded investigations into the effects of nuclear electromagnetic pulse (EMP) on telecommunications systems.

These investigations showed that existing commercial U.S. telecommunications systems are highly vulnerable to the EMP threat which would be expected to result from a high altitude nuclear explosion(s) over the United States. It was also found that various hardening techniques which are normally effective against EMI and lightning are of limited value

against EMP because of the peak value and the short rise time of the imposed energy pulse. Microwave beams and fiber optic signal cables are inherently less susceptible to EMP coupling than metallic communications cables; but, over long distances where repeaters or signal regenerators are required, electronic repeater stations remain a weak link in the system as long as they depend on the utility power grid for electricity. Back-up power supplies are also vulnerable and are limited by battery/fuel reserves.

Survivable communications systems require autonomous, compact power sources at all times. The Survivable Communications concept developed by Fairchild involves the use of an isotope power supply, integrated with the repeater unit within an EMP shield, to harden a portion of a commercial telecommunications fiber optic trunk line (See Figure 3.1). This concept could be equally beneficial to improving the survivability of military communications systems.

3.2 Significance to SDI

Each segment of the SDI C^3I/BM system architecture must be highly survivable against all probable hostile threats. The C^3I/BM system would include spaceborne, airborne, and ground segments, with a high degree of connectivity and redundancy. A large amount of effort has been and is being directed toward the difficult problem of enhancing the survivability of discrete platforms, such as spacecraft and aircraft. However, ground installations and their interconnecting data/communications networks involve survivability issues which require solutions.

Figure 3.1

Survivable Communications Network

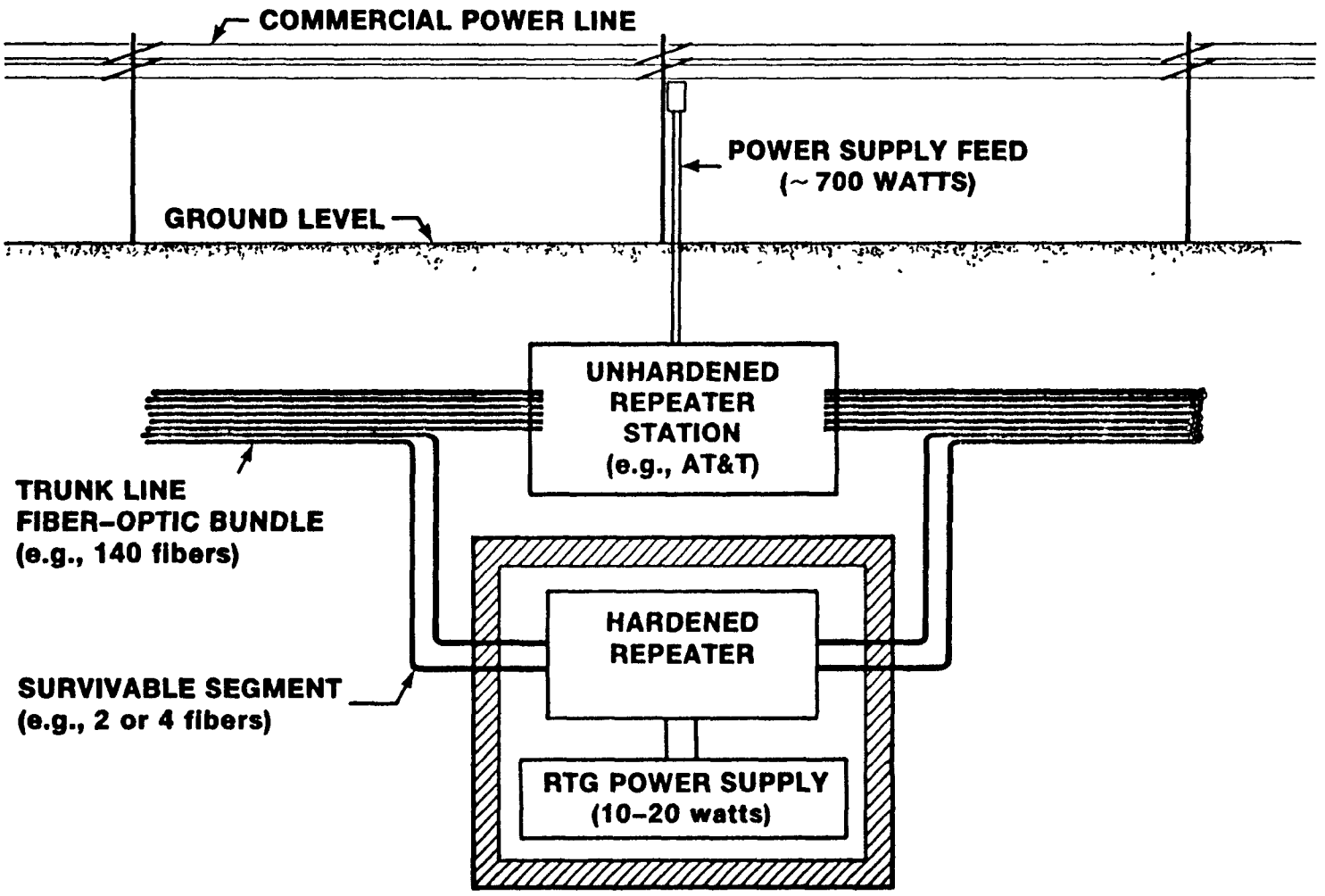

Under the SDI concept, the National Command Authority (NCA) options in battle management, such as positive control of a response to an alert situation and follow-up commands to the operating forces, and interactions between various ground-based defense installations require that certain ground segments of the C^3I/BM system remain functional after various types of pre-emptive attacks. Otherwise, the NCA and ground control are essentially removed from the loop and SDI merely reverts back to an automatic retaliation strategy. Not only must critical C^3I/BM ground segments be protected to withstand significant threats from direct endoatmospheric nuclear attack (such as from submarine launched ballistic or cruise missles), but also from the collateral effects of exoatmospheric nuclear explosions - such as EMP.

Nuclear EMP is a very significant threat to U.S. ground-based electronics equipment and telecommunications links, because a potentially devastating energy pulse could almost instantaneously reach all parts of the continental United States from the detonation of a single clandestine thermonuclear weapon in a satellite traveling in low earth orbit, while over the mid-section of the country. The rapid rise time and the magnitude of the resulting energy pulse would almost certainly disable/destroy/shutdown all unprotected electronics systems (especially solid state circuits), all existing commercial telecommunications land lines, and the entire national power grid.

This EMP threat is certainly well recognized, and is being addressed, within the defense establishment. However, the countermeasures against such a large-scale threat to critical national security

telecommunications systems are limited - particularly when large investments in commercial systems are involved. Over 90% of the National Communications System (NCS) relies on existing commercial telecommunications facilities. Its continued survival during national crises relies primarily on the multiplicity of alternate routes available. However, if most of these lines were disabled by a pre-emptive EMP attack, the NCS would be severely affected. The Administration has taken measures to investigate the survivability of the NCS against nuclear EMP (and other threats), but the implementation of a survivable NCS based largely on commercial assets will be complex, costly and slow.

As for dedicated defense systems, such as the SDI C^3I/BM system, hardening against EMP must be assured and is best accomplished when installing new systems or making major retrofits. For example, new electronic data processing and control centers and remote relay and switching stations can be buried below ground and surrounded with electromagnetic shields; new telecommunications lines can use fiber optic cables which are less susceptible to EMP; and independent power supplies can be used to provide electricity for normal or emergency operations of manned sites and remote switching, relay, or repeater stations.

The EMP threat situation is a dynamic one. As more sophisticated electronics (e.g. higher speed, larger capacity computers) are required for new operational systems, the devices are generally even more susceptible to EMP upset or damage. In addition, even if equipment was protected against a specified level of EMP, a number of simultaneous weapon bursts or one of much greater energy level could conceivably exceed that threat level and

cause damage to the equipment. If in-line devices were adequate to protect against the short rise times of EMP as we know them, there is nothing to prevent the development of new EMP source devices with even faster rise times of the resultant energy pulse. However, a quantum improvement in current evolutionary countermeasures could negate the effectiveness of such threat enhancement efforts.

For EMP-proof electrical power for critical ground segments of the SDI C^3I/BM system, dependence on the commercial power grid is unacceptable. Any power system in series or parallel with the power grid through switches, surge suppressors, fuses, etc. is only of limited usefulness. A revolutionary approach to EMP-proof power is needed to provide reliable electrical power prior to, during, and for significant periods after a sneak nuclear EMP attack.

For large power-consuming installations, e.g. manned sites, compact nuclear reactors or fuel cells are probably good choices as independent power sources. For lower power needs at remote, unattended sites, the advantages of long life, ruggedness, compactness and reliability of isotope power sources can provide enhanced survivability and autonomy of the ground segment(s) of the SDI C^3I/BM system at a low life cycle cost.

3.3 Study Objective

The overall objective of this study program was to determine the feasibility of combining and integrating long-lived, compact, autonomous isotope power sources with fiber optic and other types of ground segments

of the SDI communications, command, control and intelligence/battle management (C^3I/BM) system in order to significantly enhance the survivability of those critical systems, especially against the potential threats of electromagnetic pulse(s) (EMP) resulting from high altitude nuclear weapon explosion(s).

3.4 Study Approach

The approach used to conduct this application study program started with the collection, evaluation, and integration of data from several diverse technical disciplines. Cognizant government agencies, laboratories and/or contractors were contacted and/or visited and an extensive literature review was made to gather the latest information on relevant C^3I/BM ground segments (SDI studies and existing systems), electronic/electro-optic telecommunications technologies, nuclear and non-nuclear threat definitions, survivability and hardening approaches being used or planned for communications ground segments, ground segment power requirements and power sources being used or considered to meet these requirements, current and projected terrestrial compact power systems technologies (including isotope power systems utilizing byproducts from the DOE's defense wastes program), and the availability and costs of Sr-90 fueled heat sources. Based on the findings of this survey, the types of C^3I/BM system ground segments which would benefit most from the use of isotope power sources were selected as model applications for further investigation.

Conceptual designs of isotope power systems were developed for use in the model applications. These designs were physically, electrically, and thermally integrated with the electronics equipment in hardened facility conceptual designs to illustrate the enhanced survivability of such isotope powered C^3I/BM sites.

Finally, an implementation plan was prepared to describe how such isotope power sources can be obtained for use in SDI C^3I/BM ground segments.

The results of these various study activities are discussed in the following sections of this report.

4.0 C^3I/BM SYSTEMS

This section discusses the results of the survey made concerning the various types of C^3I/BM ground segments in use or planned which are relevant to the SDI ballistic missile defense system. It includes a discussion of the status of the SDI C^3I/BM system studies; a brief description of current C^3I systems, representive ground segment communications technologies in use or planned, and their relevance to an SDI C^3I/BM system; and, finally, a postulated, but simplified, SDI C^3I/BM system depicting the various types of ground segments it would include.

4.1 Status of SDI C^3I/BM Systems

The Strategic Defense Initiative (SDI) investigations into what combination of weapon systems, if any, might be developed to provide an effective multi-layered defense of the United States and its allies against the threat of Soviet long-range ballistic missiles are currently in their second year of intensive study and are continuing in a narrowing-down approach. These so-called SDI Systems Architecture Studies are intended to define, within the next year or so, the types of surveillance (i.e. sensor) systems required to detect and track hostile missiles and warheads in various phases of their flight trajectories and the types of defensive weapon systems which can destroy a large fraction of them before they reach their targets. Undoubtedly, an overall SDI operational system will involve a multitude of space platforms and earth-bound installations which need to be integrated in a reliable, time-critical, controlled fashion. The primary systems architecture studies, and related efforts, are also

expected to define the support systems required to effectively implement and coordinate such a complex operational missile defense system.

The importance of an effective command, control, communications and intelligence/battle management (C^3I/BM) network to the program has been acknowledged by the Strategic Defense Initiative Organization (SDIO), and a high priority is assigned to this very challenging aspect of the SDI program. The Eastport Study Group (in a December 1985 report to the SDIO) concurred with SDIO on the importance of the C^3I/BM functions, and emphasized the need for early resolutions of C^3I/BM issues as an integral part of the whole ballistic missile defense system -- not something to be added later. It recommended that the on-going System Architecture Studies should be broadened to give more consideration to the C^3I/BM issues in coordinating and controlling the sensor and weapon systems both under simulation tests and operational use. So far, the continuing SDI systems studies have not yet identified their C^3I/BM requirements.

The current C^3I/BM project activities under the SDIO include a number of efforts on C^3I/BM architecture concepts, processor and software technology, and communications network design and evaluation. The implementation of these activities is a coordinated effort between the Air Force's Electronic Systems Division (ESD) and the Army's Strategic Defense Command (SDC). ESD is focusing on the C^3I/BM architectures required during the boost phase and the early mid-course trajectory of the missiles based on spaceborne and airborne platforms, while SDC is concentrating on C^3I/BM systems of interest during the late mid-course and terminal phases of flight, based primarily on ground-based assets. These efforts involve a

multi-year, narrowing-down approach, in step with the overall SDI system architecture efforts. They have not yet identified specific C^3I/BM ground segments to be required, what their capabilities must entail, how users will interact with them -- or how survivable they must be to carry out an effective ballistic missile defense operation. It is this last issue that is of particular concern to this study.

The importance of the survivability of all operational components of an SDI system is amply recognized by the SDIO and its program. Survivability experts are involved with all aspects of the SDI program to ensure that survivability concerns are addressed from the out-set, rather than requiring retrofits or re-engineering of programs or technologies later on. Most of the survivability issues addressed to date involve the space assets of SDI which are undergoing the most intense investigations. As the SDI C^3I/BM systems evolve, their survivability issues will certainly receive similar attention. For example, SDC has recently initiated a program effort for a detailed study and test evaluation of the nuclear survivability and operability of candidate C^3I/BM architectures -- presumably including ground segments -- which will run concurrently with the architecture definition studies.

It was initially planned that this application study would start with the identification and relevant descriptions of C^3I/BM ground segments already determined to be necessary for, and perhaps critical to, the SDI program. Since the SDI C^3I/BM system is still in the early stages of evolvement, it has been necesssary to base this study on information from current or planned C^3I/BM systems which are like or similar to those

expected to be applicable to an operational SDI system.

This change in departure point has required somewhat more study effort, but should increase the value of the study results to the Government. The results from this study are available for timely inputs to the evolving SDI C^3I/BM efforts and are also directly applicable to other DOD C^3I/BM systems -- both in existence and under development.

4.2 Strategic Nuclear Command and Control System

A review of the DOD C^3I assets showed that current strategic C^3I systems are more akin to expected SDI C^3I needs than are tactical systems. Further, the SDI C^3I/BM system would be expected to require many of the same capabilities and functions, while facing similar threats or countermeasures, as those included in the current Strategic Nuclear Command and Control System (SNCCS). Specifically, the SDI C^3I/BM system is anticipated to be similar to some combination of the attack warning and attack assessment; command and decision-making; and, strategic communications operations currently used or planned for use in the SNCCS.

4.2.1 Attack Warning/Attack Assessment System

The Attack Warning/Attack Assessment (AW/AA) system is a complex super-system of widely dispersed sensors, command centers, and inter-connecting communications networks which provides national warning capabilities against hostile missile and air attacks. The North American Aerospace Defense Command (NORAD) is responsible for operating and

controlling the AW/AA system. Early warning satellites are designed to detect/locate ballistic missile launches and transmit that data back (through relay systems) to NORAD's underground Cheyenne Mountain Complex (CMC) south of Colorado Springs, CO. The Ballistic Missile Early Warning System (BMEWS) long-range radars (located at sites in Alaska, Greenland, and England) would be used to acquire and track the missiles to confirm the attack and to predict their impact points. The BMEWS sites also must transmit their data back to NORAD's CMC (and other command centers). Several other radar systems in and around the United States provide similar data to NORAD for warning of potential attacks on North America by submarine launched ballistic missiles, cruise missiles or bombers. NORAD also receives and integrates inputs from various sources within the intelligence community. The Space Defense Operations Center (SPADOC), inside the CMC, also detects, tracks, identifies and maintains the status of over 5,000 objects in space through several optical and radar sites around the World and can monitor potential hostile actions against U.S. space assets.

The NORAD CMC must be equipped to rapidly process, integrate, and assess huge amounts of data transmitted to it from a large number of different sources around the World (including space) and then transmit unambiguous results over various types of reliable, secure, and survivable communications networks to the National Command Authorities (NCA) and the Commanders-in-Chief of the Unified and Specified Commands. A similar survivable data collection, processing and forwarding ground installation and associated communications networks would be required for an SDI C^3I/BM system.

The capabilities of the AW/AA system must be continually up-graded to meet the challenge of changing hostile threats to the U.S. Currently, major modifications to the CMC are underway to enhance automatic data processing and display capabilities to better meet the goals cited above. An improved independent power generating system was recently installed in the CMC. In addition, many programs are underway to improve, replace, or augment warning sensor systems, such as the BMEWS and the perimeter radars. However, the most significant shortfall of today's AW/AA system is the vulnerability of its associated communications networks required to collect data from the widely dispersed sensors and to disseminate the processed warning information to those who need to act on it. These deficiencies are being addressed within the scope of new C^3I initiatives by the Government.

4.2.2 Command and Decision-Making

The Command and Decision-Making portion of the Strategic Nuclear Command and Control System involves the military and civilian authorities, including the President, located at the National Military Command Center (NMCC) in Washington, the Alternate NMCC at Fort Ritchie, MD, the SAC Command Post, and the various Unified Command Headquarters (as well as some mobile/airborne command posts). Upon receipt of the warning from NORAD, any discussions or data transfer required between the Nation's leaders at these widely dispersed command posts to support an informed and timely decision as to the appropriate response to be made must be rapidly communicated over the National Military Command System (NMCS). This requires an extremely reliable, survivable, high-data-rate telecommunications network between the various participants in the decision-making. A

similar command and decision-making process with its associated communications system would be required for the SDI C^3I/BM system, assuming the NCA would remain "in the loop". The time constraints on a response from the NCA for the SDI, particularly during the missile boost phase, will probably be more severe than for the current nuclear response alternatives.

To date, the NMCS has mainly relied upon a dedicated cross-country telecommunications cable system with the highly redundant commercial telecommunications network as a back-up. These minimally protected systems are also being re-assessed under the new DOD C^3I initiatives to determine if more survivable alternatives can be provided to meet the NMCS requirements.

4.2.3 Strategic Communications

Strategic communications is the key to any time-sensitive military operation involving widely dispersed assets and organizations such as the Strategic Nuclear Command and Control System -- or an SDI C^3I/BM system. Until recently, most of the DOD's strategic communications needs between ground installations were satisfied by Government-leased privately-owned telecommunications cable and microwave systems. High frequency (HF), low frequency (LF) and very low frequency (VLF) radio links of various types were used to communicate between mobile assets (e.g. aircraft and ships). With the introduction of communications satellites, more high-data-rate communications became available for use over large distances. With the increased perception of the vulnerability of the ground telecommunications networks due to the changing threat scenarios, several new strategic C^3I initiatives have been undertaken by the Government.

Several independent programs are being developed/deployed by the DOD to eventually provide reliable, survivable, and endurable strategic communications systems. The primary emphasis is on the Milstar communications satellite system. This is planned to be a multi-orbit constellation (providing complete coverage of the Earth) of hardened satellites operating in the jam-resistant extra high frequency (EHF) range which can relay messages between fixed or mobile users of any kind. The Air Force, Army and Navy are developing Milstar ground terminals for use by their respective forces. Milstar will be useful for connectivity between sensor sites, NORAD, the various command posts, and the nuclear forces. Milstar will not be fully operational until well past 1990.

In the near term, various military communications satellite systems (DSCS, FLTSATCOM and AFSATCOM) have been deployed which can fulfill some of the strategic command and control connectivity needs until the Milstar system is operational. These satellites are not as survivable as Milstar and operate at lower frequencies which are easier to jam and are more subject to interference by nuclear scintillation effects.

Another nearer-term program is the Ground Wave Emergency Network (GWEN) which is a highly redundant grid of unmanned low frequency (LF) radio stations within the United States to relay low-data-rate messages between strategic sites/forces. Eventually, over 200 of these relay stations will be installed. GWEN is designed to be resistant to nuclear collateral effects and jamming.

Several separate applications for adaptive HF radio techniques are also being investigated for use as a survivable and enduring long-range communications system alternative.

The only up-grade in the private telecommunications networks included in the DOD C^3I initiatives is the Nationwide Emergency Telecommunications System (NETS). The National Communications System (NCS) is planning and implementing the NETS using public switched networks owned and operated by the commercial telecommunications carriers. Special switching controls will allow critical Government calls to be routed over available segments to effect connectivity even with a partially damaged or congested network. This activity is part of the National Security Emergency Preparedness (NSEP) system which covers a much broader range of crisis management and emergency communication needs, but is available for use by the SNCCS.

4.2.4 Relevance to SDI C^3I/BM

The SNCCS has been reviewed in detail as the current C^3I/BM system which is most representative of a future SDI C^3I/BM system. They both have many similar communications functions and segments. The ground segments of the current system have been evolving from a dependence on leased, but dedicated, privately-owned telecommunications networks with questionable survivability to a Government-owned network of hardened LF radio relay nodes and ground terminals for use with UHF to EHF satellite relays. Much of the survivability of the new ground segments is based on proliferation (large numbers) of fixed stations, mobility of satellite terminals,

hardened equipment and use of jam-resistant frequencies which are less affected by a nuclear-disturbed environment. However, there are still reasons to believe that these new DOD systems will not totally obviate the need for more survivable telecommunications network ground segments, either for the SNCCS or for a survivable SDI C^3I/BM system of the future.

The LF GWEN system is a special purpose part of the Minimum Essential Emergency Communications Network (MEECN) primarily to disseminate emergency action messages (EAM) to the nuclear forces from the NCA during or after a nuclear attack. It is a low-data-rate system which means it takes a while to transmit even short, pre-arranged messages. It is not very useful for time-constrained operations like attack warning or decision-making coordination or data transmissions which require high-data-rate systems. Although GWEN is supposed to counter the threat of electromagnetic pulses (EMP), there is no way to test a GWEN installation complete with antennas, power lines, etc. against EMP effects. If GWEN is susceptible to EMP damage, the proliferation of nodes in the network is less meaningful -- similar to the present commercial telecommunications network.

Dependence on a limited number of satellites for relaying all high-priority, high-data-rate communications without an alternate or back-up system appears to be a high risk approach. Milstar plans include having four satellites (plus a spare) in geosynchronous orbit and a similar number in elliptical polar orbits. Thus only a few Milstar satellites will be in sight of the U.S. ground terminals at the time of a missile launch crisis. Although Milstar satellites are to be "the most survivable

satellites yet", they may become vulnerable to increased threats by the Soviets in the areas of anti-satellite weaponry (such as space-based directed energy weapons) in support of a coordinated missile attack.

The SDI program will also be based on an architecture which includes commmunications satellites to relay data and commands between sensor and weapon platforms and ground installations. Undoubtedly, the SDIO is addressing the vulnerability of such a system. Perhaps the use of forward airborne relay platforms would add some survivability to the system.

The ground terminals to be used with the satellite communications system must be survivable not only from jamming and other signal interferences, but from direct targeting (by mobility and redundancy) and from preemptive attacks such as EMP and sabotage. The susceptability of UHF antenna dishes (approximately 8 feet in diameter) or EHF dishes (approximately 4 feet across) and the associated high-data-rate communications equipment, connected by waveguides or cables, to damage by nuclear blast effects and EMP needs to be addressed. (Commercial ground terminals are notorious for their outages caused by lightning.)

It is not immediately obvious that the present system or an SDI C^3I/BM system could or should do without an alternative ground segment based on a reliable, survivable, and enduring or reconstitutable telecommunications network.

Current Government programs and funding levels for hardening ground facilities and terrestrial communications are minimal. The entire commercial landline network is vulnerable to collateral nuclear effects and would need to be hardened considerably. However, the Pentagon treats hardening of the commercial telecommunications facilities with a relatively low priority compared to its C^3I initiatives, previously described. The primary reason given for this is the anticipated high costs involved. The importance of the EMP threat is partially rationalized away by assuming that most of the major switching nodes in the commercial network are located in major cities or near other likely targets that would be destroyed in a major nuclear attack anyway. So why harden them against EMP? This totally ignores the value of such networks prior to the arrival of enemy warheads or in a ballistic missile defense system. (Many strategists believe that a preemptive EMP threat, which would be coordinated with a Soviet first strike, will be deterred by our endurable strategic nuclear missile submarine retaliatory capabilities. But, it has been reported that both U.S. and Soviet plans contain first strike options, including EMP strategies designed to disable C^3I systems.)

The cost of hardening the existing commercial telecommunications network is relatively meaningless until an adequate up-grade program is defined. The only historical data in this area, for the hardening AT&T did during the 1960's and 1970's, was buried in the cost of providing telephone service to its customers nationwide. It is reasonable to assume that AT&T's follow-on competitive carriers will not incur costs for hardening their systems without adequate inducements or reimbursements by the Government. In addition, the use of public funds to improve

privately-owned assets within a very competitive, regulated industry would introduce legal issues which must be addressed.

Perhaps the entire private telecommunications network does not have to be hardened. A few hardened landlines to provide the connectivity critical to the NMCS prior to the arrival of enemy warheads would certainly enhance the SNCCS capabilities (and perhaps SDI). These systems could be installed and operated under Government contract so they would be owned by the Government. Many of the Government leased systems are over 20 years old and much improved telecommunications techniques are available and in use today.

The commercial telecommunications industry has been working with fiber optics for a decade or more. New systems are being installed which make use of this fiber optic equipment because of its high-data-rate and larger traffic carrying capabilities -- and it is less expensive than coax cable systems. Thousands of miles of fiber optic cables are being installed by the commercial carriers. Fiber optics telecommunications systems provide a great potential for survivability in a nuclear-disturbed environment and for security enhancements resulting from the lack of radiated emissions.

4.3 NSEP Telecommunications System

There are some 22 government agencies responsible, to some degree, for what is called national security/emergency preparedness (NSEP). These include both military and civilian organizations which are charged with

responsibilities in time of national crises, from natural disasters to nuclear war. The national telecommunications infrastructure necessary to support essential national leadership requirements during such crises is called the NSEP Telecommunications System.

The NSEP agencies have some government-owned systems, but they depend very heavily on commercial telecommunications carriers and other privately owned communications systems. For example, the DOD depended on non-Government lines for about 95 percent of its voice and data transmissions before the AT&T break-up in January 1984. This continues to be the case, except now it must depend on a number of independent commerical carriers. This could be another reason the DOD is pursuing the installation of government-owned alternative strategic systems discussed earlier.

4.3.1 NSEP Telecommunications Policy

In November, 1979, Presidential Directive/NSC-53 was issued in an attempt to integrate the redundant commercial telecommunications system into national defense policy. This policy statement requires that the nation's telecommunications systems must provide for: (1) connectivity between the NCA and strategic and other forces to support flexible execution of retaliatory strikes during and after an enemy nuclear attack; and (2) responsive support for operational control of the armed forces, even during a protracted nuclear conflict.

The present Administration has continued this policy by emphasizing

the value of the entire telecommunications infrastructure of the U.S., including commercial and private networks as well as Government systems, as a crucial element of U.S. deterrance policy. In mid-1983, the White House issued National Security Decision Directive 97 which recognized the critical role of the commercial carrier system in support of wartime communications, the continuity of government, and mobilization for general war expanding the concept behind PD/NSC-53 and taking into account the less regulated environment in which the nation's telecommunications system would be operating.

In April 1984, the President issued Executive Order 12472 which established a framework for the planning, development and the implementation of the capability to meet all NSEP needs of the Government. This E.O. clarified the roles among the various departments and agencies and re-established the National Communication System (NCS) to assist the national leadership in carrying out these NSEP telecommunications functions. The NCS is composed of the telecommunications assets and representatives of the 22 Federal agencies which own or lease telecommunications facilities or services of significance to NSEP. The NCS is co-located with and funded via the budget of the Defense Communications Agency (DCA).

The NCS is the focal point for all joint industry-government NSEP telecommunications matters. It is responsible for ensuring that a national telecommunications infrastructure is developed which: (1) is responsive to the NSEP needs of the President and government agencies, including telecommunications in support of national security leadership and

continuity of government; (2) is capable of satisfying priority telecommunications requirements under all circumstances through use of commercial, government and privately owned telecommunications resources; and (3) incorporates the necessary hardness, redundancy, mobility, connectivity, interoperability, restorability and security to achieve the maximum practicable survivability of NSEP telecommunications under all conditions of crisis or emergency.

It is apparent from this that the NSEP telecommunications system has substantial policy and organizational direction by the Government and its broad scope includes telecommunications systems applicable to the SNCCS or a future SDI C^3I system.

4.3.2 NSTAC

The NCS also provides support for the National Security Telecommunications Advisory Committee (NSTAC). NSTAC was established by E.O. 12382 to foster the joint planning between government and industry needed to meet NSEP requirements. Its membership consists of senior executives of the major companies which make up the nation's telecommunications industry. The NSTAC, through various sub-groups and task forces, is addressing several ways to make commercial telecommunications more survivable, restorable, and responsive to emergency situations including: promotion of links between different networks and standards to make them interoperable, use of materials or equipment resistant to EMP, creation of back-up power sources, and standardization of procedures for restoring networks after a disaster. Final reports have

been issued by two task forces which are especially pertinent to this program concerning Commercial Network Survivability and EMP.

NSTAC is also looking into funding and regulatory issues concerning the NSEP telecommunications system. NSTAC and NCS have created a National Coordinating Center staffed with representatives of the NSEP agencies and the commercial carriers to expedite cooperative efforts in response to NSEP needs. NCS is preparing guidelines for the industry and government to use in obtaining, maintaining and restoring (including an updated restoration priority plan) NSEP telecommunications services.

These current activities taking place at the very hub of the NSEP telecommunications system confirm the continuing importance of up-grading the current infrastructure and offer potential timely opportunities for application of the concepts being addressed in this study program.

4.4 Representative Telecommunications Systems

The U.S. commercial telecommunications infrastructure includes all types of networks such as coax cables (both buried and aerial land lines), microwave repeater systems, communications satellites with their earth terminals, radio networks, and optical fiber cable systems. Prior to the January 1984 divestiture of AT&T, the Bell system set the standards for telecommunications technologies and the AT&T systems, now owned by a number of independent operating companies, which utilize switching and repeater equipment based on these technologies. However, each network is designed to suit the market it serves and new technologies are included as they

become available. Now, with the new carrier companies entering the competitive market with their own equipment, there is a wide variety of equipment in use and there is really no such thing as a "typical" system with "typical" repeaters, switches, power sources, etc.

There are some telecommunications networks which are representative of those being used or planned for NSEP purposes which would also be applicable to an SDI C^3I/BM system.

4.4.1 L-4 Transcontinental Cable

The L-4 transcontinental underground coax cable system is the backbone of the operational communications network linking the main nuclear command centers and operational forces. The L-4 cable is laid in 150 mile sections joined by underground manned maintenance facilities. There are also a number of ground entry points in the system where airborne assets can be connected into the system. The underground coax cable system includes repeater stations every mile or two in pre-fabricated manholes hardened to 10-150 psi overpressure.

Electrical power for the repeaters is fed from the manned stations through a power lead in the cable. In 1972, a section of the L-4 cable was knocked out for 30 minutes by a magnetic storm. Since then, back-up or uninterruptible power supplies have been added to the system. Battery systems are provided with sufficient capacity to last four hours at manned stations and eight hours at unmanned sites. Although each coax line requires very small power levels at each repeater, there are nine working

pairs in the cable and a large number of repeaters between the manned stations, so that about a kilowatt of power is required at each manned station for the electronics, plus power for lighting, heating, etc. Switching or multiplexing stations require even more power. The prime power for the L-4 system comes from the public power grid with diesel generator back-ups.

4.4.2 Microwave Repeater Stations

For AT&T microwave repeater sites, located 15 to 20 miles apart, the electronics for each transmitter/receiver circuit (with a back-up each way) requires about 750 watts. Each AT&T microwave repeater site has at least 6 or 7 of these circuits. In addition, the installation requires power for lighting, heating, etc. The AT&T WT4 millimeter wave repeater station requires about 10 kw DC and another 30 kw AC for utilities, etc. A 60 KVA turboalternator unit is used as a back-up power source at these sites with prime power supplied by the utility grid. The above-ground buildings and antenna towers are not hardened against blast or EMP threats.

4.4.3 Satellite Ground Terminals

Satellite ground terminals come in all sizes from the likes of the deep space stations at Goldstone to the back-yard TV receiver. Military ground terminals for operation in the UHF range, such as with the AFSATCOM or DSCS satellites, have antenna dishes about 8 feet in diameter. The EHF range antennas for use with the future Milstar satellites are only about 2 to 4 feet in diameter. These antennas can be mounted on the tops of

fixed ground facilities or remote from them (and redundant) for survivability reasons. Displacement of antennas from a fixed ground facility prevents their use in targeting the facility. The signals can be transmitted directly to the ground site by coax cables or transformed and transmitted over optical fiber links. The antenna can also be mounted on a mobile ground terminal of either a truck-mounted or transportable modular design. Mobile ground terminals have been built for use within NATO which have been hardened with EM shielding, pulse limiting, common mode signal rejection, an uninterruptible power supply and an auxiliary power generator. The power requirements for such ground stations depend on their overall function, but remote ground terminals for the reception and relay of signals from satellites require only a few kilowatts or less. Dish antennas must be exposed while in operation and are, therefore, vulnerable to blast overpressures and wind effects.

4.4.4 Low Frequency Radio Network

The GWEN system will consist of hundreds of small low frequency unmanned radio stations in a widely dispersed grid and will use low data rate packet-switching techniques to relay vital strategic messages. Each relay node resembles a low-power commercial AM radio station with a 300 foot antenna tower and a buried ground-wave antenna on an intrusion protected site. Each site will also include two EM shielded enclosures. One will contain the radio receiver-transmitter and switching electronics. The other will house an emergency power supply as a back-up to local utility power.

A GWEN station requires about 3 KW (or less) and in case of local power failure, uses a battery UPS to carry the load until the diesel generator set starts-up. GWEN enclosures with double shielding and surge suppressors have been subjected to simulated EMP tests.

4.4.5 Optical Fiber Communications Systems

Lightwave cable systems utilizing hair-thin glass fibers are being installed by all of the commercial carriers. All forms of telecommunications, telephone calls, video signals, computer data, and facsimile and teleconferencing services, can be sent over optical fiber systems with pulse rates of over 500 million per second. (Gigabits/sec may be possible in the near future.) Over 6000 simultaneous phone calls can be carried on a single pair of fibers. Optical cables are easier to install and are more economical than other systems and are less affected by electromagnetic interference, thus providing clearer signals with lower error rates. Since they emit no external signals, they are also more secure against eavesdropping.

As fiber quality improves, greater distances between signal regenerators or repeaters are permitted. Single mode fiber losses are only hundredths of a dB/KM. In 1982, repeater spacing of 4 miles was used. In 1985, this increased to 20 miles between repeaters. The power required for optical fiber cable repeaters depends on the size of the system, trunk lines versus dedicated lines. A dedicated line with one working fiber and one back-up in each direction would require only 10-14 watts for the regenerator electronics.

The AT&T Southern Transcontinental Lightguide System now under construction includes an 860 mile section between Los Angeles and El Paso. This cable contains 30 fibers and is buried at a depth of 3 1/2 feet. Signal regeneration stations are located every 20-22 miles. Power from the local power grid is used for the electronics and utilities at each above-ground, unmanned station.

About 3,000 miles of the AT&T nationwide system has been installed using optical fibers. By 1990, AT&T will have connected 120 U.S. metropolitan areas with fiber optic cables. Other carriers also are installing nationwide light-guide systems. Military systems using optical fibers are also being utilized to upgrade or expand current systems.

4.5 Postulated SDI C^3I/BM Systems

A simplified sketch of a postulated SDI C^3I/BM system network is shown in Figure 4.5. Those sites (or nodes) to be located on (or beneath) the earth's surface and which require interconnecting communications links are shown below the dashed line in Figure 4.5.

The Strategic Defense Initiative (SDI) System Architecture will undoubtedly include an Attack Warning/Attack Assessment (AW/AA) System similar to the present NORAD system composed of space and ground based assets (perhaps augmented with forward airborne platforms) to detect and track ballistic missile launches and assess the threat of such launches to the United States and its allies. This information must be collected at some central data processing and control center (presumably in the U.S.)

Figure 4.5

POSTULATED SDI C3I/BM SYSTEM

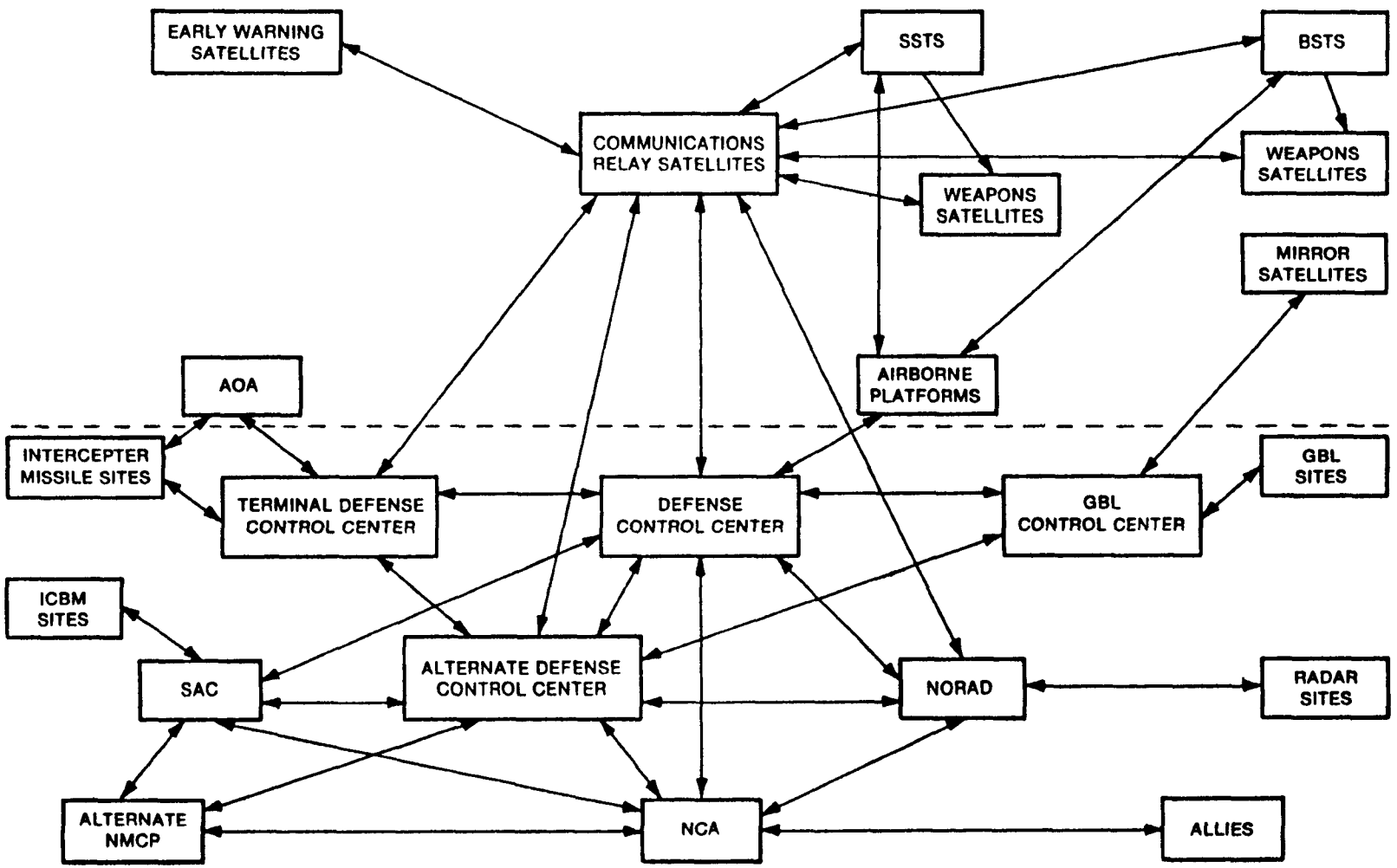

either directly from the sensor platforms and ground sites (through data relay systems where necessary) or through dispersed data collection, processing, and relay centers strategically located closer to the sensors (presumably outside the U.S.), or both. The data must be rapidly processed, analyzed, and correlated with current data from similar systems concerning the status of air-breathing threats, theater missile threats (such as submarine launched missiles) and intelligence information having a bearing on the world's situation.

Worldwide communications systems must be available to funnel all of this data to the Central Control Center. The Center must be equipped to process and display this diverse information in essentially real time. High-speed computer capability must be available to analyze the data and alert Center personnel of potential as well as actual crisis situations as they develop.

Tracking data received during the early missile boost phase must be relayed to spaceborne weapon systems (e.g. KEW) and ground-based laser systems with their associated space-based mirror platforms, as necessary. This requires real time control links between satellites, satellite-to-ground, ground-to-ground, and ground-to-satellite assets for information, verification and implementation.

Assuming the current man-in-the-loop control policies continue to apply, the Central Control Center (and any back-up or alternate control centers) must communicate the status and its assessment of the situation to the National Command Authority (NCA) for appropriate action. This requires

reliable, secure, redundant, high data rate communications links between the Control Center(s) and the various NCA Command Posts and their alternates. Coordination, discussion, and support would be required from many dispersed elements of the U.S. defensive and offensive forces by the national military and civilian leadership during their decision-making process. This will require telecommunications links between various locations within the U.S. as well as with our allies. Having decided to respond against the missile threat, the NCA must issue appropriate orders to the defensive and offensive forces (presumably in accordance with pre-arranged operational plans). In regard to the defensive forces, the orders must be transmitted from the NCA to the Control Centers which operate the ground and space-based weapons aimed at the hostile ballistic missiles.

To effect an attack against the missiles while they are still in the boost phase requires that the data collection/processing/assessment, alerting the NCA, leadership decision-making, issuance of orders by the NCA, and implementation of the orders by carrying out the attack must be accomplished in a few minutes.

The surveillance and tracking systems must continue to operate in order to discriminate surviving missiles from boost phase battle debris, detect and track multiple warheads as they separate from the launch vehicles, and hand over the targets to the mid-course surveillance and tracking system. All of this data must be transmitted between satellites and ground control facilities for battle management assessment and control.

At various times during the defensive engagement, appropriate data and other inputs must be communicated between the defense Control Center(s), the NCA, and the offensive forces as to when, or if, the strategic nuclear forces are to be released (launched).

The mid-course phase of the defensive battle requires the continued availability of data transmission, data processing, and weapon control links between various satellite sensor, data relay, and weapon platforms, as well as the associated ground facilities. Status information must also be communicated to the NCA and the Commanders-in-Chief of the Unified and Specified Commands.

As the battle progresses, any surviving warheads approaching the terminal or reentry phase must be handed over to the terminal phase tracking, control and intercept system. This system would include ground and airborne sensor systems, interceptor missile launch facilities, and battle management and control centers which must be linked by communications and data relay systems. This system might be widely dispersed in order to intercept incoming warheads aimed at various targets in the U.S.

If the Strategic Defense System is highly successful, very few, if any, warheads will reach their intended targets. If not, many hostile warheads will undoubtedly reach high priority targets, including any offensive forces still held in reserve, critical C^3I nodes (such as those used for the missile defense system), and national command posts. The fewer the number of warheads to reach their targets, the easier it will be

to maintain or reconstitute a national defense C^3I/BM system for use against any follow-on attacks.

The above scenario only addresses the ballistic missile defense operations and assumes that the hostilities begin with a massive ballistic missile attack on the U.S. by a known potential adversary nation, such as the U.S.S.R. However, it is much more likely that such an adversary would launch a coordinated attack by bombers, cruise missiles and submarine launched ballistic missiles, as well as strategic ballistic missiles. Such a multi-faceted attack would stress the nation's communications systems to a much greater degree. In addition, pre-emptive clandestine attacks, high altitude nuclear EMP bursts, anti-satellite attacks, and off-shore missile launches designed to destroy or disrupt critical communications systems and command/control centers should be expected to precede the other attacks. The SDI C^3I/BM system must be considered a prime target of such pre-emptive attacks.

Therefore, the SDI C^3I/BM facilities and equipment must be physically protected against clandestine operations, hardened to survive intense EMP levels, and hardened against nuclear weapon threats associated with off-shore missile attacks. For those facilities which cannot be hardened sufficiently to withstand such direct attacks, redundant, widely dispersed facilities must be provided with alternate connecting communications links in order to increase the probability of survival of the operational defense system long enough to engage the ensuing ballistic missile attacks.

5.0 NUCLEAR AND OTHER THREATS TO THE C^3I/BM GROUND SEGMENTS

This section summarizes the various threats that could potentially destroy, disrupt or otherwise negate defense communications systems. The threats of most concern to the designers and users of critical C^3I/BM segments include potential hostile actions involving direct and collateral effects of nuclear weapons, electronic countermeasures, and covert activities. Defense communications systems must also be concerned with natural and accidental causes of system outages.

A detailed treatment of these various threats is far beyond the scope of this study program report. However, it is meaningful to generally describe the types and magnitudes of the various threats in order to provide the proper prospective for a survivable and secure operational communications system which can endure prior to, during, and after hostile attacks.

5.1 Direct Nuclear Threats

The direct effects of a nuclear explosion include the blast and shock effects associated with any explosion, albeit at much higher levels, plus the thermal radiation effects, the initial or prompt nuclear radiation effects and the residual or delayed nuclear radiation effects.

About 85% of the energy yield from a nuclear weapon explosion is released in the blast effects and as heat. The remaining 15% is given off as nuclear radiation and fission products - 5% in the initial nuclear

radiation released within a minute after the explosion and 10% in the residual radiation released over a longer period of time. For a thermonuclear weapon in which about half of the energy is due to fission, only 5% of the energy is released in the form of residual radioactivity.

The direct nuclear effects vary with the energy yield of the explosion, the distance (or slant range) from the explosion, and the location of the explosion relative to the earth's surface. Nuclear weapon explosions are generally categorized as high altitude bursts, air bursts, surface bursts, and underground (or underwater) bursts.

5.1.1 Blast Effects

When a nuclear weapon is detonated, large amounts of energy are released in the form of fission or fusion energy, prompt gamma and neutron radiation, and fission products. This energy is released so rapidly that intensely high temperatures (10's of millions of degrees) and extremely high pressures (millions of atmospheres) are created, vaporizing everything in the immediate vicinity of the explosion. The thermal energy, in the form of soft x-rays, the other radiations from the explosion, and the pressure forces of the expanding gases interact with the surroundings to cause the nuclear blast effects.

The blast effects on the surroundings vary with the location of the explosion. For example, in an air burst, the expanding gases cause a fireball to be formed with its size depending on the yield of the weapon and the density of the air. The fireball from a 1 Megaton (MT) air burst

reaches a maximum radius of about 3,500 feet. However, in a high altitude burst, no real fireball is formed and the energy is deposited over a very large region. For an underground burst, depending on the depth, the fireball may break the surface or be completely contained beneath the surface (such as in underground weapon tests).

Cratering - If the fireball from an air burst touches the ground, a shallow crater is formed by vaporization of the soil and removal of the soil by air movements during the debris cloud formation. If the explosion point is nearer the surface, a larger crater is formed. The size of the crater varies with weapon yield and type of surface as well as the height of burst. For a 1 MT burst on a dry soil surface, a crater with a 485 foot radius would be expected, with a maximum depth of about 220 feet.

There is an optimum depth of burst which can be selected to create the maximum sized crater for any particular weapon size/type of surface combination. For example, the optimum depth of burst for a 1 MT weapon is about 1,030 feet resulting in a crater with a 1,670 foot radius and about 875 feet deep. This is only the crater which is apparent after the explosion. The soil or rock around this crater can be disturbed (crushed, cracked, shifted, etc) out to distances of over twice the apparent radius. In the case of the 1 MT example above, the affected volume of earth extends to about 3600 feet from ground zero (directly over the burst). The volume of the crater is roughly proportional to the yield of the weapon, so that a 20 MT weapon would create a maximum crater with a radius about 2 1/2 times as large as that formed by the 1 MT weapon.

Figure 5.1.1-1 shows the minimum distances from ground zero for only slight damage to small, heavy, well designed underground structures due to cratering for various types of soil and surface or optimum underground bursts as a function of weapon yield.

During crater formation, a ground shock wave is generated which moves out radially from the point of burst. Because of the density of the soil and/or rocks, these ground shock waves are rapidly attenuated. Only in the vicinity of the crater will they be energetic enough to be a significant damage mechanism to substantial structures. However, well beyond the area of the crater, the ground shock waves will be similar to the light tremors associated with earthquakes which can cause damage to fragile materials and delicate equipment which are not shock mounted.

It would appear that any target receiving a direct hit with a high yield nuclear weapon would be severely damaged or destroyed by the huge cratering effects of such weapons. Even control centers or command posts which are deeply buried underground could be destroyed if hit by a large enough weapon. However, useful guidance is provided by the cratering effects in designing target perimeter sites and for achieving a balanced hardness in a system against all types of threats.

Blast Wave - Within a fraction of a second after a nuclear explosion, the expansion of the hot gases in the fireball causes a high-pressure wave to develop which moves rapidly away from the point of the explosion. This is the air shock wave (or blast wave) which is the

Figure 5.1.1-1

MINIMUM DISTANCES FROM GROUND ZERO FOR ONLY SLIGHT DAMAGE TO SMALL, HEAVY, WELL DESIGNED UNDERGROUND STRUCTURES

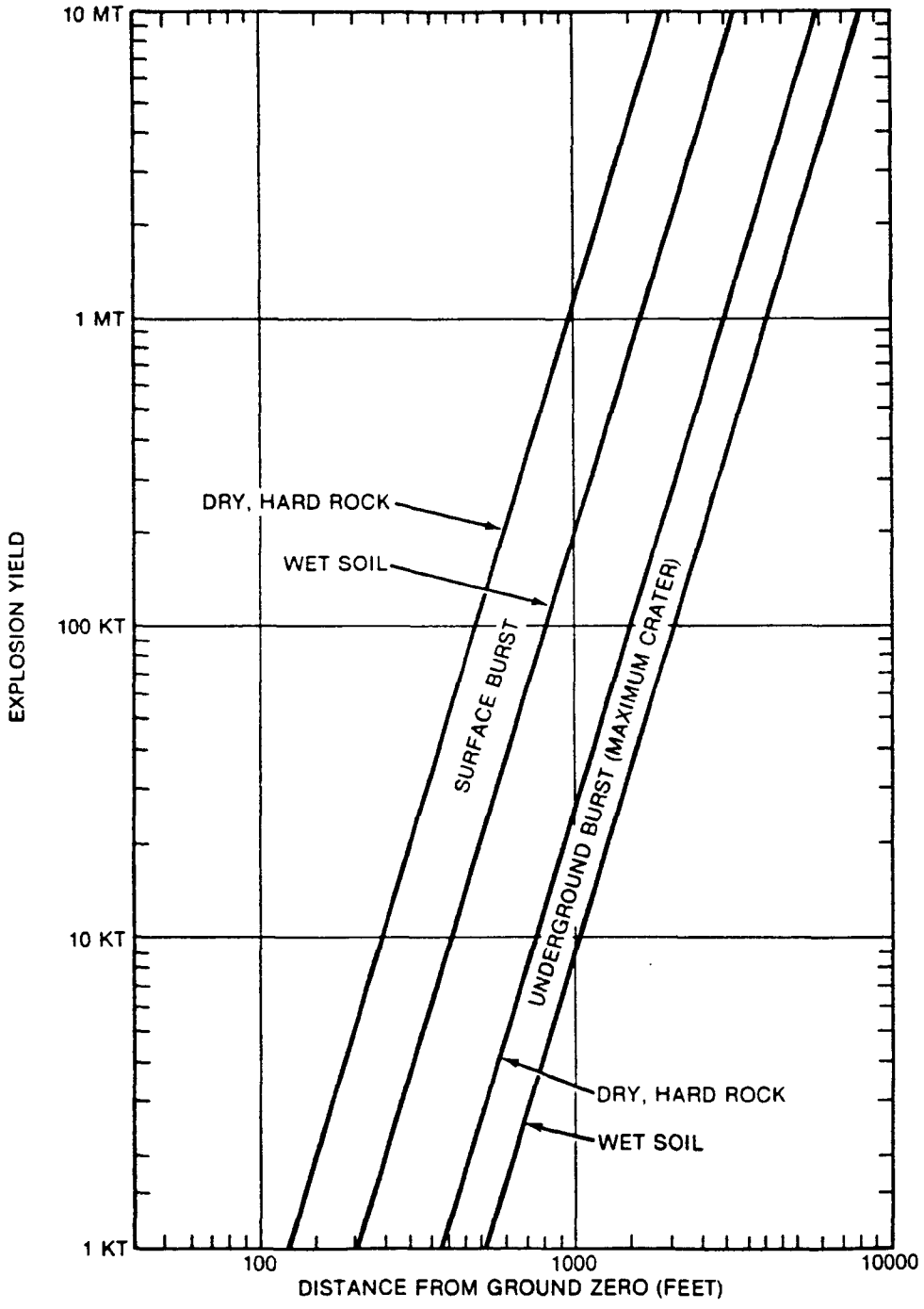

cause of much of the destruction accompanying a nuclear explosion at or near the earth's surface.

The destructive effects of the blast wave are related to the characteristics of the pressure pulse within the moving shock wave, the peak over-pressure, and the pulse duration. The pulse causes the pressure on a target to rise abruptly to a peak value as it passes the target and then decay rapidly to ambient levels within about one second. The magnitude of the peak over-pressure at any distance from a nuclear explosion is a function of the yield and the height of burst. The peak over-pressure decreases with distance from the explosion point, but the pulse has a longer duration because the shock wave moves slower as it spreads out from the explosion. Figure 5.1.1-2 shows peak over-pressures versus distance expected from free air bursts of various yields for sea-level ambient conditions.

A lower burst altitude would be selected for harder targets, while a higher burst height with lower pressures over a larger area might be more effective for softer targets.

When the blast wave from an air burst strikes the earth, it is reflected like a sound wave, causing two blast waves with the reflected wave moving faster than the direct wave. When the direct and reflected waves merge, the over-pressure is about twice as high as for the direct blast wave front without reflection. The distance beyond which the shock waves are merged into a single pulse will vary with the height of burst and

Figure 5.1.1-2

PEAK OVERPRESSURE FROM FREE AIR BURSTS FOR SEA-LEVEL AMBIENT CONDITIONS

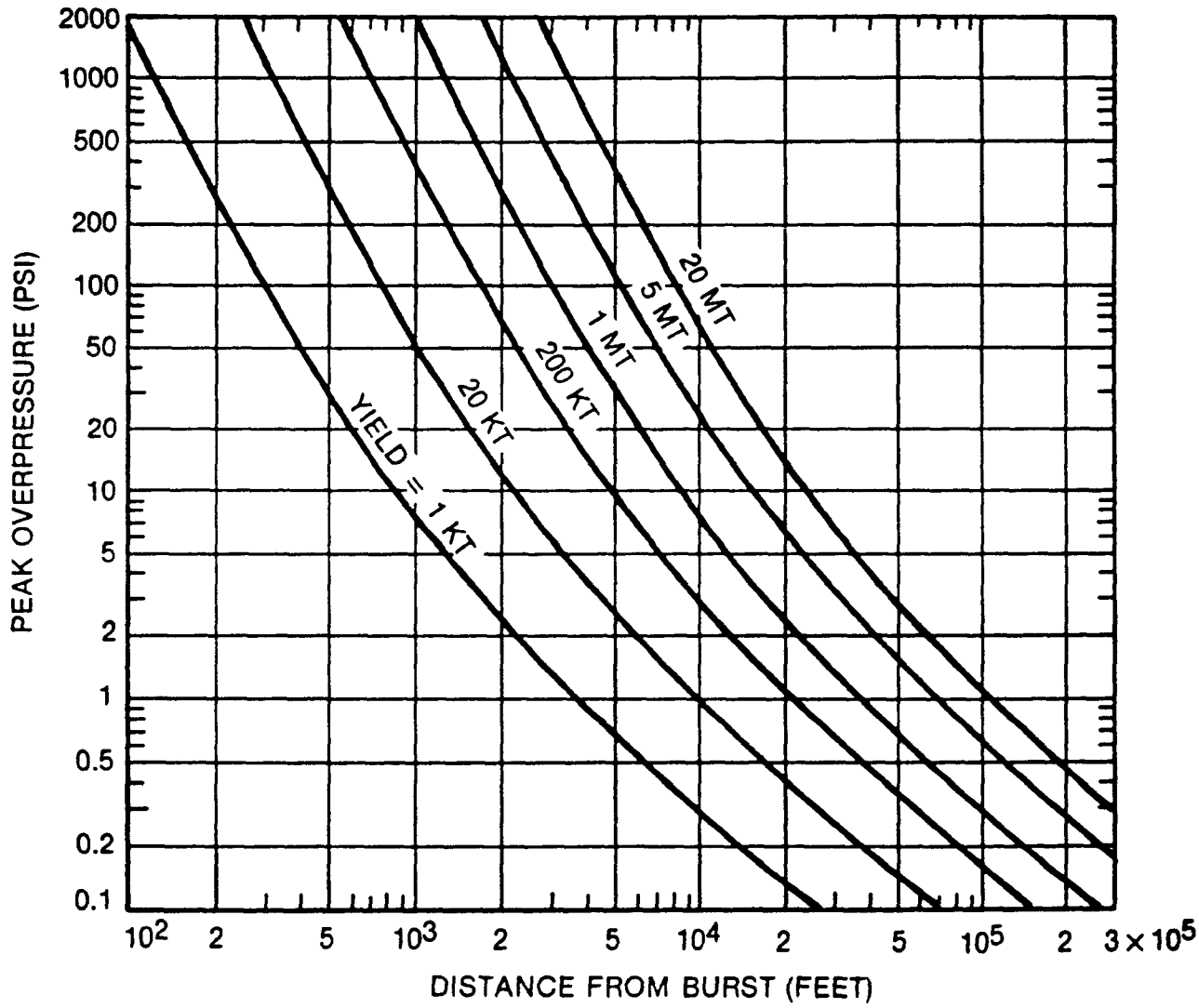

the yield of the weapon. For a surface burst, the waves coincide so there is only one shock wave.

Where the fireball breaks the surface in an underground burst, part of the fireball energy is tranformed into an air blast wave above the surface with lower peak over-pressures than for an air or surface burst. For high altitude bursts, the energy is spread over such a large area before reaching the denser atmosphere that no significant shock wave reaches the earth's surface.

Strong transient winds are associated with the passage of the air shock front. These winds may have peak velocities of hundreds of miles per hour and can contribute greatly to the blast damage from a nuclear explosion. The dynamic pressure pulse due to the blast wave lasts longer than the over-pressure pulse and damaging winds may persist at distances well beyond where the over-pressure loads are significant. For many structures, the degree of blast damage depends largely on the drag forces associated with the strong blast wave winds.

The air blast pressure wave is the source of most of the stress on shallow-buried undergound structures, even for shallow sub-surface bursts (at distances beyond the crater area). The blast wave over-pressure may be taken as the effective load on shallow-buried structures. There are no wind drag forces involved and tests have shown no increase in pressure due to reflection of the ground shock wave at the interface between the soil and the structure. For the soil to attenuate much of the load from the air

blast, the underground structure must be buried to depths equal to three times its span, or greater.

Blast wave effects on above ground communications and utility facilities have been evaluated in nuclear bomb tests. Only the strongest buildings of heavily framed steel and reinforced concrete, like those designed to be earthquake resistant, can withstand blast over-pressures as high as 5 psi. Telephone poles, antenna towers, satellite dishes, and power lines are all high-drag structures which can be blown down by the winds caused by the blast wave or damaged by flying debris. A blast wave with only 5 psi over-pressure would be expected to destroy many of these high-drag facilities, primarily due to the winds.

Shallow-buried, reinforced concrete structures have shown only light damage (cracking) at peak over-pressures in the air blast wave of 120-160 psi. These over-pressures are associated with distances from the burst (or ground zero) either within or just beyond the maximum crater sizes expected from large nuclear weapons, and are therefore considered worst case over-pressures. Underground cables and power lines, which are flexible enough to accommodate some slight earth movement, have stood up well under blast wave pressures expected beyond cratering effects.

The peak over-pressure of 100 psi from a 1 MT air burst occurs at a slant range of about 3,500 feet. This is similar to the maximum crater radius for a 1 MT weapon exploded at the optimum depth. In the latter case, the 100 psi over-pressure would occur at only 700 feet from ground zero, well within the cratered region.

5.1.2 Thermal Effects

One of the important differences between nuclear and conventional weapons is the large amount of energy released by the former as thermal radiation (or heat). The extremely high temperatures of the fireball cause it to radiate its heat away in the form of soft x-rays, which are quickly absorbed in the first few feet of the surrounding air. This heats the air layer causing it to reradiate its energy as thermal radiation of longer wavelengths (in the ultraviolet, visible, and infrared spectra).

The amount of heat radiated and the duration of the thermal pulse are functions of the yield and location of the explosion. In a high altitude burst, the fireball temperature is much lower so that its thermal pulse is very short and of little significance on the earth. In an air burst, about 35% of the yield is released in the form of thermal radiation which can cause damage over great distances. The thermal threat to personnel exposed to the fireball is obvious; but the heat pulse from a nuclear weapon, which moves at the speed of light, can also start fires and weaken structures before they are hit by the blast wave.

Since the duration of the thermal pulse is so short (on the order of seconds, depending on the yield), most of its energy is deposited near the surface of exposed targets. This can destroy surface coatings and warp contoured surfaces used in communications, such as antennas.

The effect of the thermal radiation is reduced by distance from the explosion. The thermal radiation is spread over a larger area and the

radiation is attenuated (by absorption and scattering) in the atmosphere. The attenuation is also a function of the clarity of the air. Smoke, fog and dust in the air will result in lower thermal transmittance. Significant thermal effects can reach distances beyond the range of blast wave effects.

Figure 5.1.2 shows the thermal radiation exposures at ground level at various distances from nuclear air bursts of various yields at or below 15,000 feet altitude on a clear day.

The thermal radiation from a surface or sub-surface burst is less than for an air burst, mostly due to the smaller fireball and the greater air density along the surface.

Any solid opague material between the target and the fireball will act as a shield and provide some protection from the direct thermal radiation. Atmospheric scattering of the radiation will cause some exposure behind such a shield and the thermal radiation will pass through transparent materials.

5.1.3 Nuclear Radiation Effects

Another threat unique to nuclear weapons is the nuclear radiation created as a result of the explosion. About 5% of the weapon's yield is released as initial nuclear radiation within the first minute after the explosion. The initial radiation is composed of primary gammas and

Figure 5.1.2

THERMAL RADIATION EXPOSURES AT GROUND LEVEL*

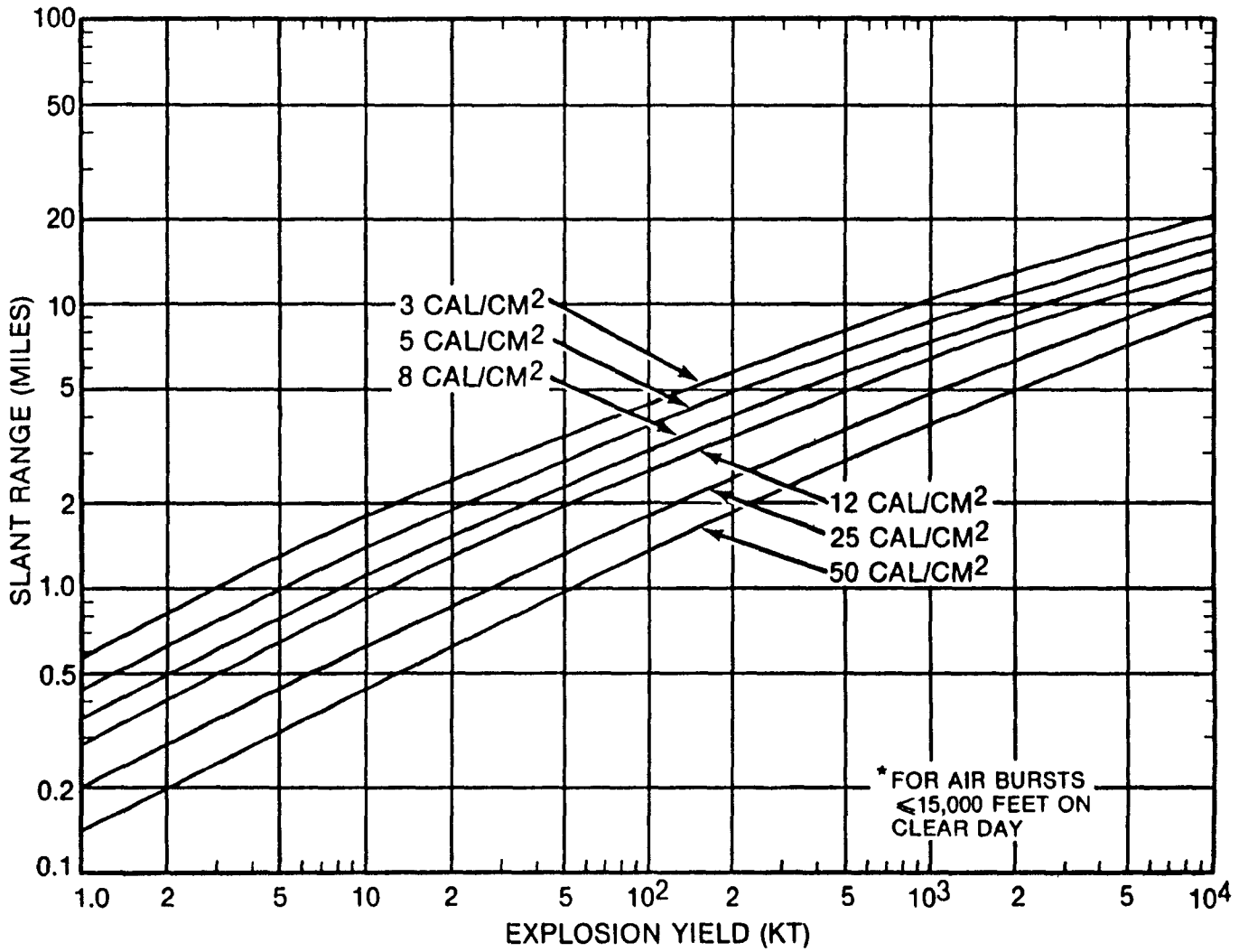

REF: "THE EFFECTS OF NUCLEAR WEAPONS", S. GLASSTONE & P.J. DOLAN, U.S. GPO, 1977

neutrons formed during the fission and fusion processes, secondary gammas resulting from neutron interactions with the constituents of the surrounding atmosphere (primarily nitrogen), and alpha, beta and gamma radiation from the decay of fission products. Much of the radiation is absorbed almost immediately, but some of the gammas and neutrons escape the fireball region to cause a nuclear radiation hazard at much greater distances. These penetrating radiations contain about 3% of the energy yield of the weapon and move at nearly the speed of light to impose a significant, almost instantaneous threat to personnel and sensitive electronic equipment in the vicinity of the explosion.

The gamma and neutron fluxes coming from the fireball travel in straight lines, generally radially from the burst point, until they collide with materials in their paths. Thus, the direct fluxes (and potential dose rates) are decreased with distance from the burst point. Upon interaction with intervening materials, the direct radiation can be scattered or absorbed causing these energetic gamma and neutron fluxes to be slowed down and more easily absorbed as they pass through such materials. Although gammas and neutrons are affected differently by different materials, generally the denser the material the better it will stop or shield against such nuclear radiation. Thus, effective shielding can be provided to protect personnel and sensitive equipment against this initial radiation at sufficient distances from the explosion.

Although the fluxes and potential dose rates associated with the initial radiation from a nuclear explosion are extremely high, the radiation pulse is relatively short (<1 minute) so that the potential doses

(dose rate X time) are finite and within manageable limits. Typical gamma and neutron doses from air-burst thermonuclear weapons are shown in Figures 5.1.3-1 and 5.1.3-2, respectively.

The initial nuclear radiation threat from a high altitude burst is relatively insignificant at the earth's surface because of the absorption in the intervening atmosphere. Likewise, much of the radiation is absorbed in the surrounding earth for underground bursts. Therefore, the primary concerns are associated with initial nuclear radiation from air and surface bursts. It's this initial nuclear radiation that can cause a large number of casualties among inadequately protected personnel and damage unprotected equipment. Unlike the thermal radiation, the gammas and neutrons penetrate into a material until they deposit all of their energy, causing damage within the body or equipment components.

Damp earth and concrete are good neutron and gamma shielding materials. Each foot of concrete can reduce the neutron flux from a thermonuclear weapon by a factor of ten. Adding iron, boron ore and other materials to the concrete can improve its neutron capture and shielding effectiveness. Dense materials containing elements with high atomic numbers (e.g. lead, tungsten, etc) make good gamma radiation shields. However, bulky construction materials are also effective in sufficient thicknesses. For example, four feet of ordinary concrete would protect personnel from the initial nuclear radiation at about one mile from a 1 MT air burst (assuming they are protected against the air blast). Unmanned electronic equipment installations require much less radiation protection (shielding).

Figure 5.1.3-1

TYPICAL GAMMA DOSES FROM AIR-BURST THERMONUCLEAR WEAPONS

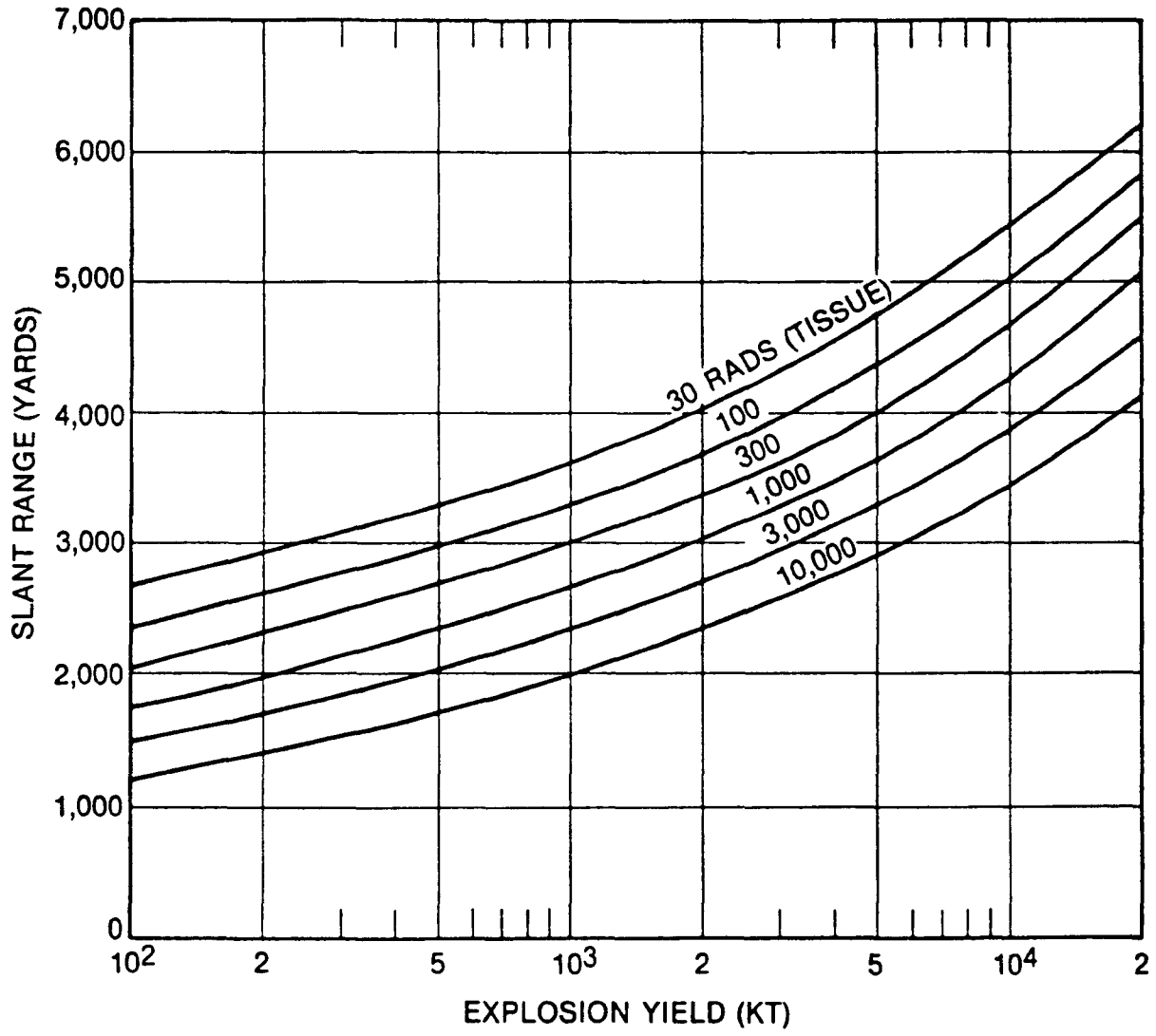

REF: "THE EFFECTS OF NUCLEAR WEAPONS", S. GLASSTONE & P.J. DOLAN, U.S. GPO, 1977

Figure 5.1.3-2

TYPICAL NEUTRON DOSES FROM AIR-BURST THERMONUCLEAR WEAPONS

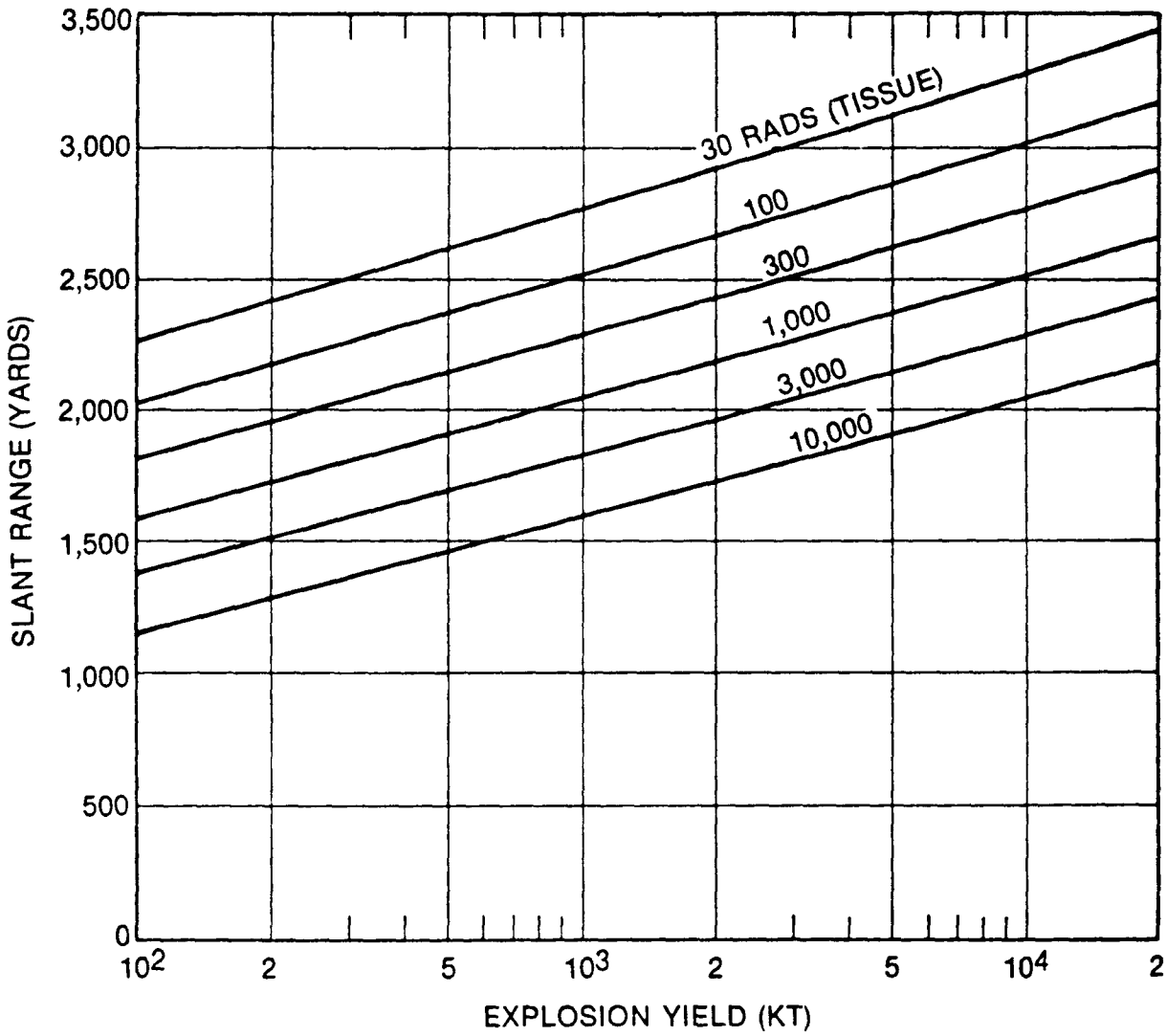

REF: "THE EFFECTS OF NUCLEAR WEAPONS", S. GLASSTONE & P.J. DOLAN, U.S. GPO, 1977

Residual nuclear radiation from a nuclear weapon explosion is defined as that which is emitted later than one minute after the explosion. From a fission weapon, the residual nuclear radiation is mainly from weapon debris, fission products, and, if it is close to the surface, induced activity from neutron interactions with materials in the explosion environment. The residual nuclear radiation from a fusion weapon is mainly from the neutron reactions.

The primary hazard from residual radiation is in the fallout of particulates containing radioactive materials and the fact that the winds can carry the fallout to distances far beyond other direct effects of the explosion and deposit them over long periods of time.

Early (or local) fallout, in the form of larger particles, reaches the ground in the first 24 hours after the explosion. Delayed fallout (after one day) is in the form of fine particles which settle in low concentrations over large areas (can be worldwide from high altitude bursts) and over time periods up to years after the explosion.

Residual radiation is greatly reduced as the fission products decay. Only the local fallout causes an immediate direct radiation hazard while all of the fallout causes concern about long term effects like health hazards from working in a contaminated area, inhaling contaminated air, or ingesting contaminated food and water.

Although the total radioactivity in the residual radiation at one minute after a nuclear weapon explosion is about 3×10^{10} curies per KT

(kiloton), by the end of one day this has decayed 2000-fold from the one minute level. The decay rate for the fission products from a nuclear weapon over the first two weeks is roughly a factor of ten decrease in radioactivity for every seven-fold increase in time (e.g., the radiation level at the end of 7 days will be one tenth the level at the end of one day). (See Figure 5.1.3-3). The decay rate continually changes as the shorter-lived materials decay and leave only the longer-lived fission products. In actual situations, radiation measurements should be taken to determine whether or not an area is safe for personnel.

For an air burst in which the fireball does not touch the surface, there will be negligible early fallout. Figure 5.1.3-4 shows the approximate maximum height of burst versus yield for appreciable local fallout. For lower bursts, early fallout is mostly a concern to personnel. If sensitive equipment is shielded adequately to protect it from the initial nuclear radiation, it would also be protected from the residual radiation in early fallout. However, residual radiation sources can be concentrated into hot spots by various mechanisms, such as air supplies, water run-off and drainage systems, etc.

The effects of nuclear radiation on communications equipment is of particular concern to this study. Much has been done to determine how such equipment is affected by nuclear radiation and to develop materials, components and circuits which are much more resistant to damage or disruption by nuclear radiation. The two primary radiation effects on materials are the transient effects caused by ionization as the radiation (mainly gammas) passes through the equipment and the permanent effects

Figure 5.1.3-3

RATE OF DECAY OF FISSION PRODUCTS EXPLOSION AFTER A NUCLEAR

(Activity is taken as 100 at 1 hour after the detonation.)

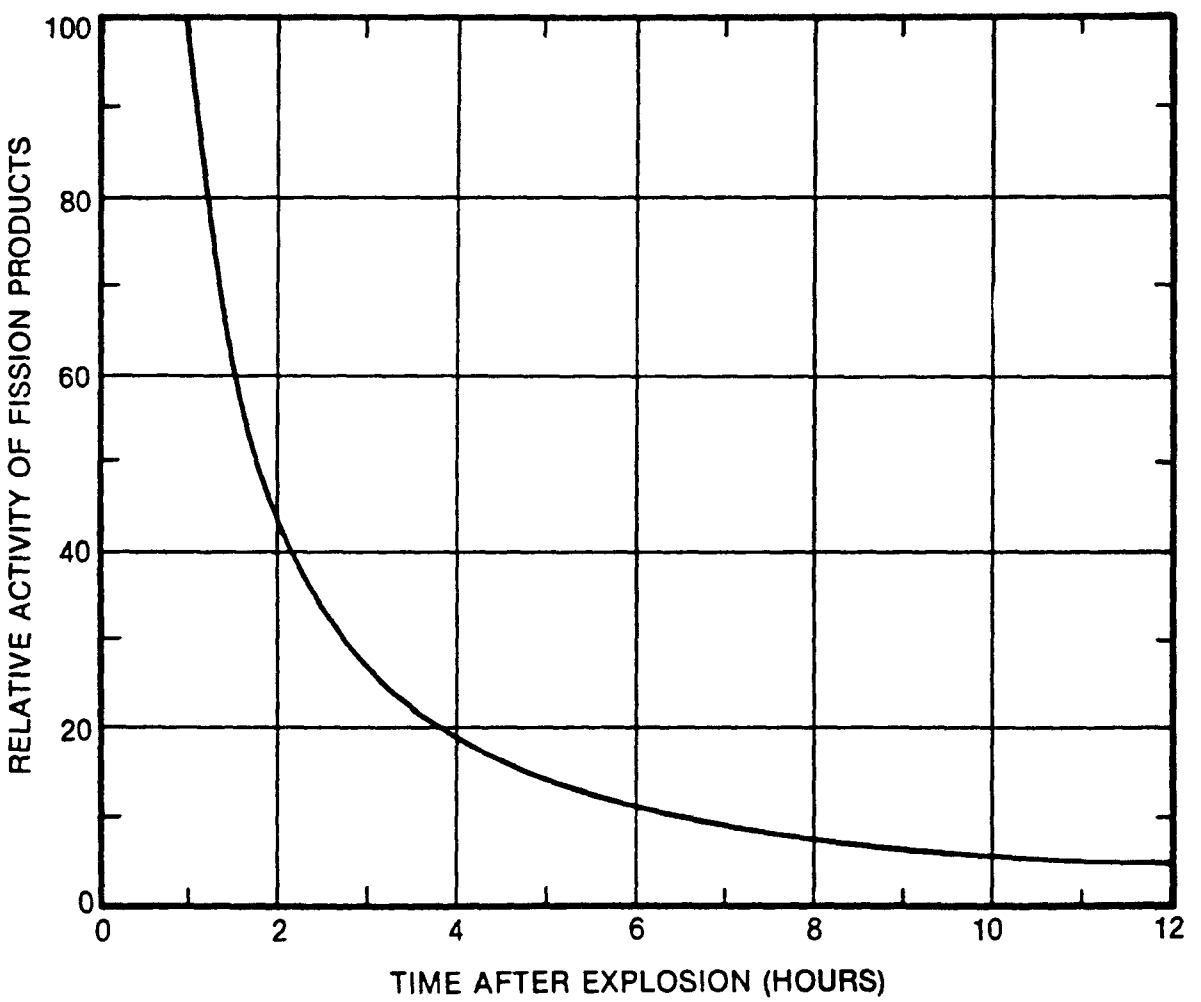

REF: "THE EFFECTS OF NUCLEAR WEAPONS", S. GLASSTONE & P.J. DOLAN, U.S. GPO, 1977

Figure 5.1.3-4

APPROXIMATE MAXIMUM HEIGHT OF BURST FOR APPRECIABLE LOCAL FALLOUT

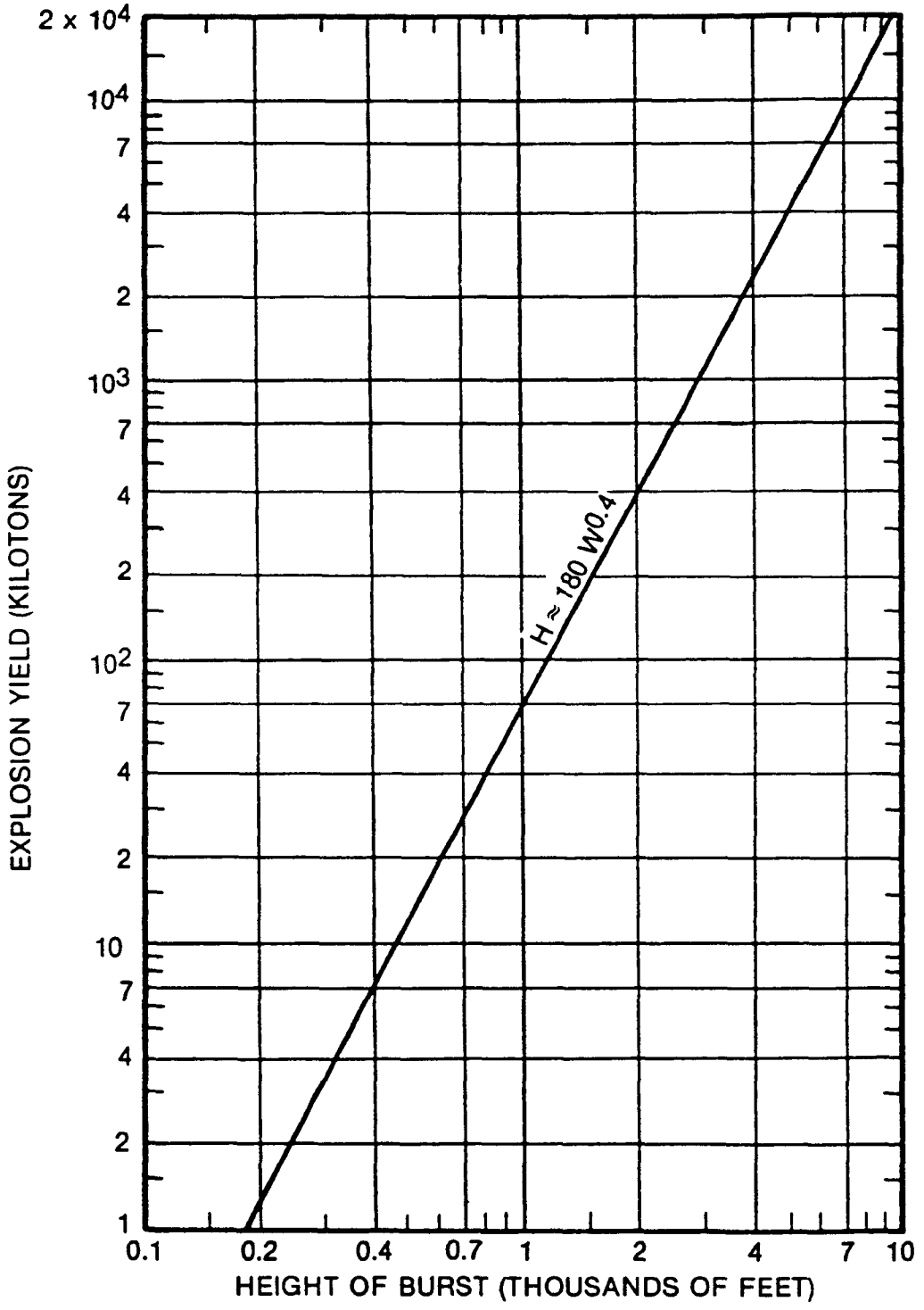

REF: "THE EFFECTS OF NUCLEAR WEAPONS", S. GLASSTONE & P.J. DOLAN, U.S. GPO, 1977

caused by displacements in the material (mainly from high energy neutrons). The ionization can cause spurious currents; breakdown of resistors, insulators, and capacitors; and change operating characteristics of components. Photoluminescent effects can cause anomalies in optoelectronic equipment. Dislocations in various materials can alter their electrical properties, such as in solid state devices, or their ability to transmit light, such as in optic fibers.

Transient effects are dependent on dose rates and are generally only a concern while exposed to the radiation pulse. Permanent effects are more related to the total dose of radiation received during a pulse exceeding a threshold damage level. However, some defect damage does anneal out within reasonable periods of time after a radiation pulse has been experienced.

By proper design and selection of the components, reasonable threshold radiation doses and dose rates for gammas and neutrons can be established for the communications equipment. Then by providing sufficient shielding to reduce the radiation threat at the equipment to levels below those thresholds, the communications system can be hardened to survive and operate through the nuclear radiation pulse, assuming it can survive other direct nuclear effects.

5.2 Collateral Nuclear Threats

Nuclear weapon explosions in or above the earth's atmosphere can cause major disturbances in the electromagnetic properties of the

atmosphere which can interfere with communications link transmissions and disrupt or damage communications equipment. These indirect or collateral nuclear effects on communications systems include the ionization blackout and the electromagnetic pulse (EMP).

5.2.1 Ionization Blackout

The radiations from the fireball of a nuclear explosion and its radioactive debris can produce marked changes in the natural ionization levels in the earth's atmosphere. A nuclear explosion can, therefore, disturb the propagation of electromagnetic waves with a wavelength of 1 mm or longer, which includes practically the entire communications frequency spectrum. The magnitude of the effects is a function of weapon yield, altitude, signal frequency, and location of the propagation path with respect to the explosion. In some circumstances, high frequency (HF) communications can be blacked out completely for several hours after a nuclear explosion in the atmosphere.

The electrons and ions formed by a nuclear explosion can absorb or attenuate radio waves trying to propagate through them and they can bend (or refract) radiowaves from regions of higher ionization levels in the atmosphere. A large nuclear explosion can add as many electrons to the atmosphere as normally exist at any time in the entire ionosphere. When the burst is at a low altitude, near the surface, this ionization is over a limited region which is opaque to radio waves for a few seconds. However, there is little effect on propagation paths outside this small region. As the altitude of the burst increases, the ionization effects spread over

larger deposition regions until at higher altitudes (>70 miles) the electrons can be deposited over hundreds to thousands of miles. In fact, the increased electron concentrations can be trapped by the earth's magnetic field and spread around the world. These enhanced electron levels can persist for several days.

This nuclear-induced ionization can degrade, i.e., attenuate, distort, or interfere with, communications signals which depend on the ionosphere for propagation. This can occur for periods of minutes to hours over large areas from a single high altitude burst. While systems which use line-of-sight communications between ground stations, like microwave relay systems, will experience little signal degradation, long range systems which reflect signals off natural ionization layers of the atmosphere can be severely affected as these natural layers are disturbed. Signal to noise ratios can be decreased as signals are attenuated or noise levels are increased. Scattering off increased ionization layers can cause signal phase shifts and interference by altering the skip distances and causing signal delays between the transmitter and the receiver.

Nuclear explosions will generally not degrade low frequency (LF) systems which normally depend on ground waves, unless the reflections or sky waves are very strong. HF radio transmissions which are used for long-range communications beyond line-of-sight can be seriously degraded by nuclear explosions. Black-out of HF signals can last from a few seconds to several hours. A 1 MT burst at 200 miles altitude in the daytime would be expected to disrupt HF signals out to a distance of about 1500 miles from the burst point.

Higher frequency (VHF and above) line-of-sight communications are only affected in the vicinity of the fireball and in transmissions which must pass through the ionization layers of the atmosphere, such as those between satellites and ground terminals. The attenuation is inversely proportional to the frequency used. Therefore, signals in the gigahertz range are less perturbed than those in the megahertz range. The much shorter wavelengths used in laser communications should not be significantly affected by nuclear ionization of the atmosphere.

Table 5.2.1 summarizes the effects of nuclear detonations on the various frequency bands (up through UHF) used in radio and radar systems.

Complex computer programs based on modeling the atmosphere, the weapon effects, the antenna patterns, etc. are required to quantitatively analyze signal propagation attenuation for various communications links. Since there is little actual data from previous atmospheric tests, these analyses are only as good as the theoretical models on which they are based.

5.2.2 Electromagnetic Pulse

The blast, thermal, nuclear radiation, and radio blackout effects of nuclear explosions are generally well known. A lesser known collateral effect of nuclear weapons exploded in or above the atmosphere could conceivably be the greatest threat to those C^3I/BM ground segments important to the SDI program. A single, large nuclear explosion, properly placed, could generate a very high energy electromagnetic pulse (EMP) with

Table 5.2.1

EFFECTS OF NUCLEAR DETONATIONS ON RADIO AND RADAR SYSTEMS

Frequency Band	Degradation Mechanism	Spatial Extent and Duration of Effects*	Comments
VLF	Phase changes, amplitude changes	Hundreds to thousands of miles; minutes to hours	Ground wave not affected, lowering of sky wave reflection height causes rapid phase change with slow recovery. Significant amplitude degradation of sky wave modes possible
LF	Absorption of sky waves, defocusing	Hundreds to thousands of miles; minutes to hours	Ground wave not affected, effects sensitive to relative geometry of burst and propagation path
MF	Absorption of sky waves, defocusing	Hundreds to thousands of miles; minutes to hours	Ground wave not affected
HF	Absorption of sky waves, loss of support for F-region reflection, multipath interference	Hundreds to thousands of miles, burst region and conjugate; minutes to hours	Daytime absorption larger than nighttime, F-region disturbances may result in new modes, multipath interference
VHF	Absorption, multipath interference, or false targets resulting from resolved multipath radar signals	Few miles to hundreds of miles; minutes to tens of minutes	Fireball and D-region absorption, FPIS circuits may experience attenuation or multipath interference
UHF	Absorption	Few miles to tens of miles; seconds to few minutes	Only important for line-of-sight propagation through highly ionized regions

*The magnitudes of spatial extent and duration are sensitive functions of detonation altitude and weapon yield.

REF: "THE EFFECTS OF NUCLEAR WEAPONS", S. GLASSTONE & P.J. DOLAN, U.S. GPO, 1977

a frequency spectrum encompassing almost all communications bands, which could disrupt or damage critical communications and power systems over an area as large as the continental United States.

Endo- and exo-atmospheric nuclear explosions of all types are accompanied by an EMP. The intensity and duration of the pulse and the area over which it occurs varies greatly with the location of the explosion. The strongest EMP fields are caused by a burst at or near the earth's surface where the air is most dense; the greatest areas are affected by the EMP from a high altitude burst.

When the gamma rays from a nuclear explosion collide with air molecules, electrons are knocked free. This occurs in the deposition (or ionization) region which surrounds the fireball in a low altitude or surface burst and which lies in a layer at the top of the atmosphere within line-of-sight of a high altitude burst. These free high energy electrons, called Compton recoil electrons, move outward from the burst point and separate from the heavier, slower positive ions left in the deposition region. This causes an intense electric field to be formed which tends to draw the electrons back toward the explosion. The movement of the charged particles produces intense magnetic and electric fields in the region called the EMP source region. Beyond this region, a radiated EMP field is generated due to the asymmetrical currents that exist in the source region and the interaction of the geo-magnetic field with these large electron currents.

For a near surface burst, the vertical movement of the electrons causes a local EMP and the return current in the earth creates a local magnetic pulse. Although the source region in this case is limited in size, extending perhaps a mile out from the burst point; the EMP fields within this region are extremely high - hundreds of thousands of volts/meter - and millions of amperes of current are generated. Like any electromagnetic wave, the EMP radiated from the source region falls off with distance due to absorption in the atmosphere. The radiated EMP field from a 1 MT surface burst can extend out to about 8 miles in all directions, comparable in range with other effects from such an explosion. (However, conducting cables passing through this region can collect large current pulses and carry them to facilities well beyond the region.)

In the case of a high altitude burst, above the sensible atmosphere, the gamma rays directed toward the earth are stopped within a thick layer of the upper atmosphere, producing a large deposition region limited only by the line-of-sight from the burst point and the curvature of the earth. The Compton electrons produced are deflected by the earth's magnetic field, turning around the flux lines and generating an EMP plane wave toward the earth. EMP fields on the order of 25,000 - 50,000 volts/meter are radiated over the large geographical area beneath the deposition region.

The geographical extent of high altitude EMP (HEMP) is determined entirely by the height of burst (HOB), with ground ranges extending to the tangent to the earth from the burst point. Figure 5.2.2-1 shows the extent of the coverage for various heights of burst over the United States.

Figure 5.2.2-1

EMP GROUND COVERAGE FOR HIGH-ALTITUDE BURSTS AT 100, 200, AND 300 MILES

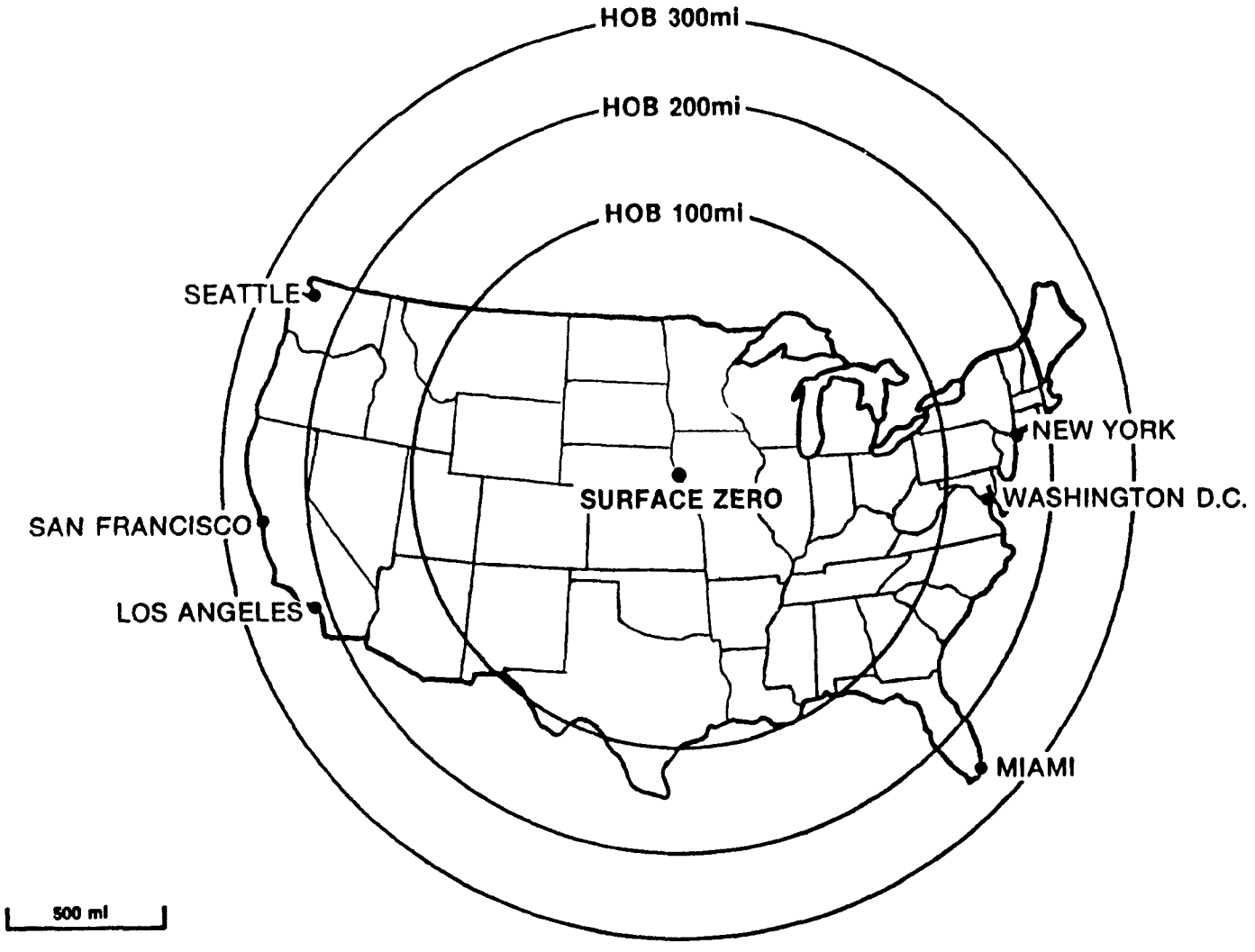

Clearly, a single, large weapon exploded over the central U.S. can produce an EMP over the entire continental U.S. Since the radiations travel with the speed of light, the whole area would be affected simultaneously, and immediately, by a single high altitude burst.

Although the EMP field strength varies over the area due to the orientation of the geomagnetic field, large EMP fields extend over the entire area. The distribution of the expected EMP field strengths over the U.S. is shown in Figure 5.2.2-2.

Since the gamma rays are emitted from a nuclear explosion in a very short period of time, the EMP increases rapidly to its peak strength in about 10 nanoseconds (10^{-8} seconds) and then decays over a longer period (tenths of a microsecond). Therefore, the EMP covers a broad spectrum of frequencies, up to several hundred megahertz. The shape of an actual pulse would be complex and unique to each case based on the various physical phenomena involved, including the HOB, the yield of the weapon, and the relative position of the target. However, a generic worst case waveform has been developed and is shown in Figure 5.2.2-3. The EMP contains both a changing electric field and a proportional magnetic field, which is also shown in Figure 5.2.2-3.

Although of short duration, the EMP contains a considerable amount of energy. The total pulse energy in the generic wave form is nearly 1 Joule/meter^2. The frequency spectrum and the normalized energy density spectrum for the worst-case waveform is shown in Figure 5.2.2-4. About 99% of the energy in the EMP waveform lies in frequencies below 100 megahertz.

Figure 5.2.2-2

VARIATIONS IN ELECTRIC FIELDS ON SURFACE FOR HIGH YIELD BURST AT 300 MILES OVER CONTINENTAL U.S.

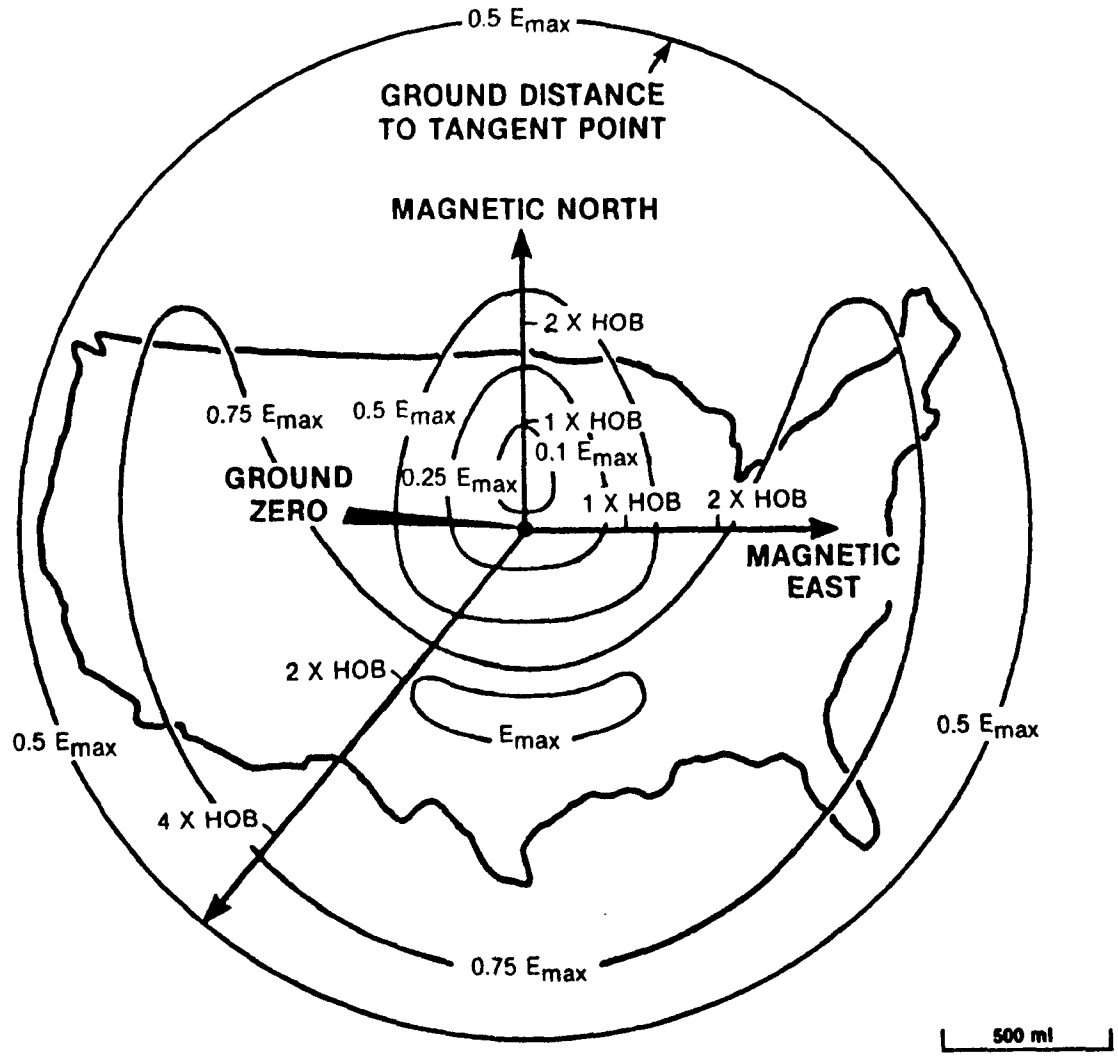

REF: "THE EFFECTS OF NUCLEAR WEAPONS", S. GLASSTONE & P.J. DOLAN, U.S. GPO, 1977

Figure 5.2.2-3

HIGH-ALTITUDE ELECTROMAGNETIC PULSE WAVESHAPE

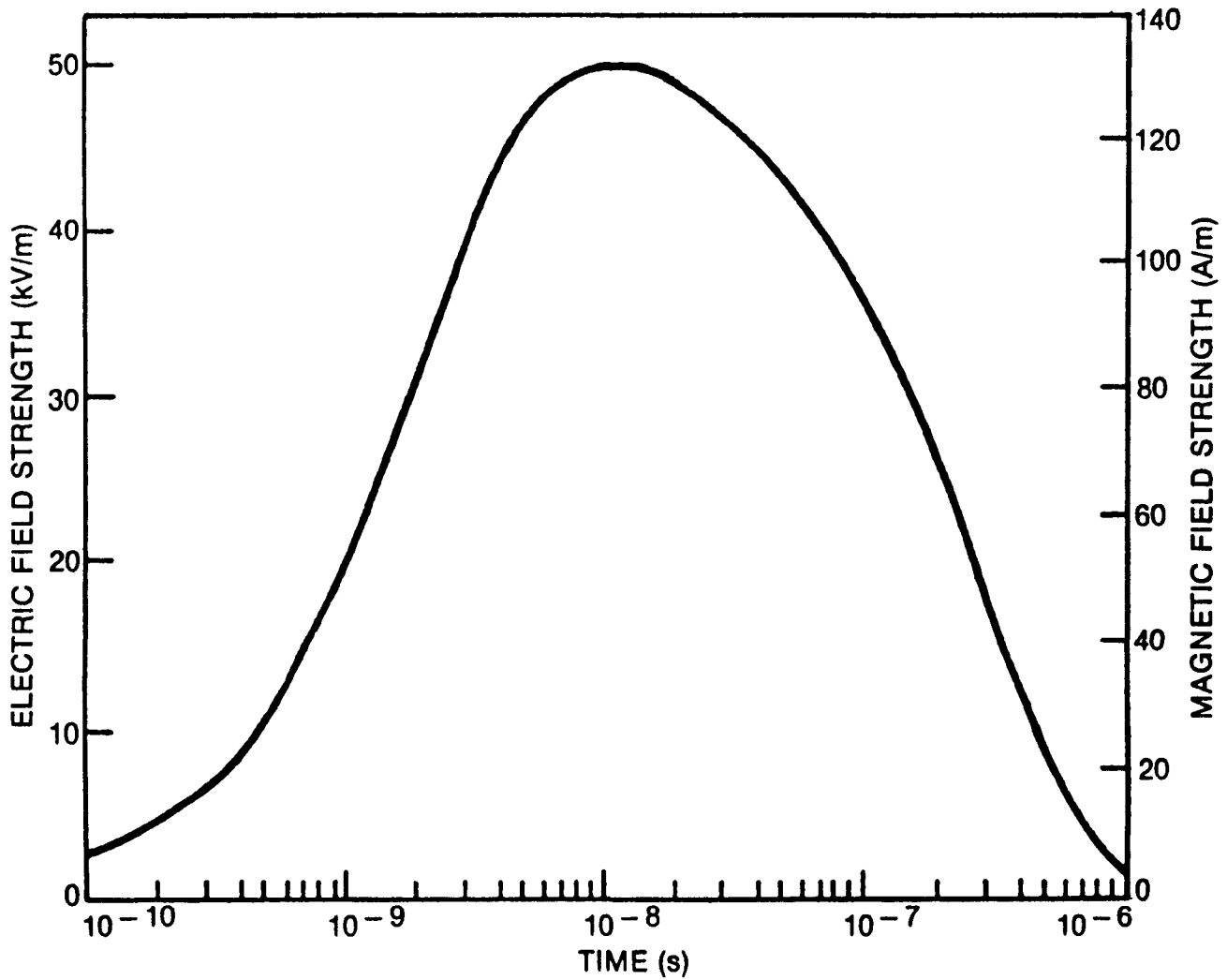

REF: HDL-SR-83-14

Figure 5.2.2-4

HIGH-ALTITUDE ELECTROMAGNETIC PULSE SPECTRUM AND ENERGY DENSITY SPECTRUM

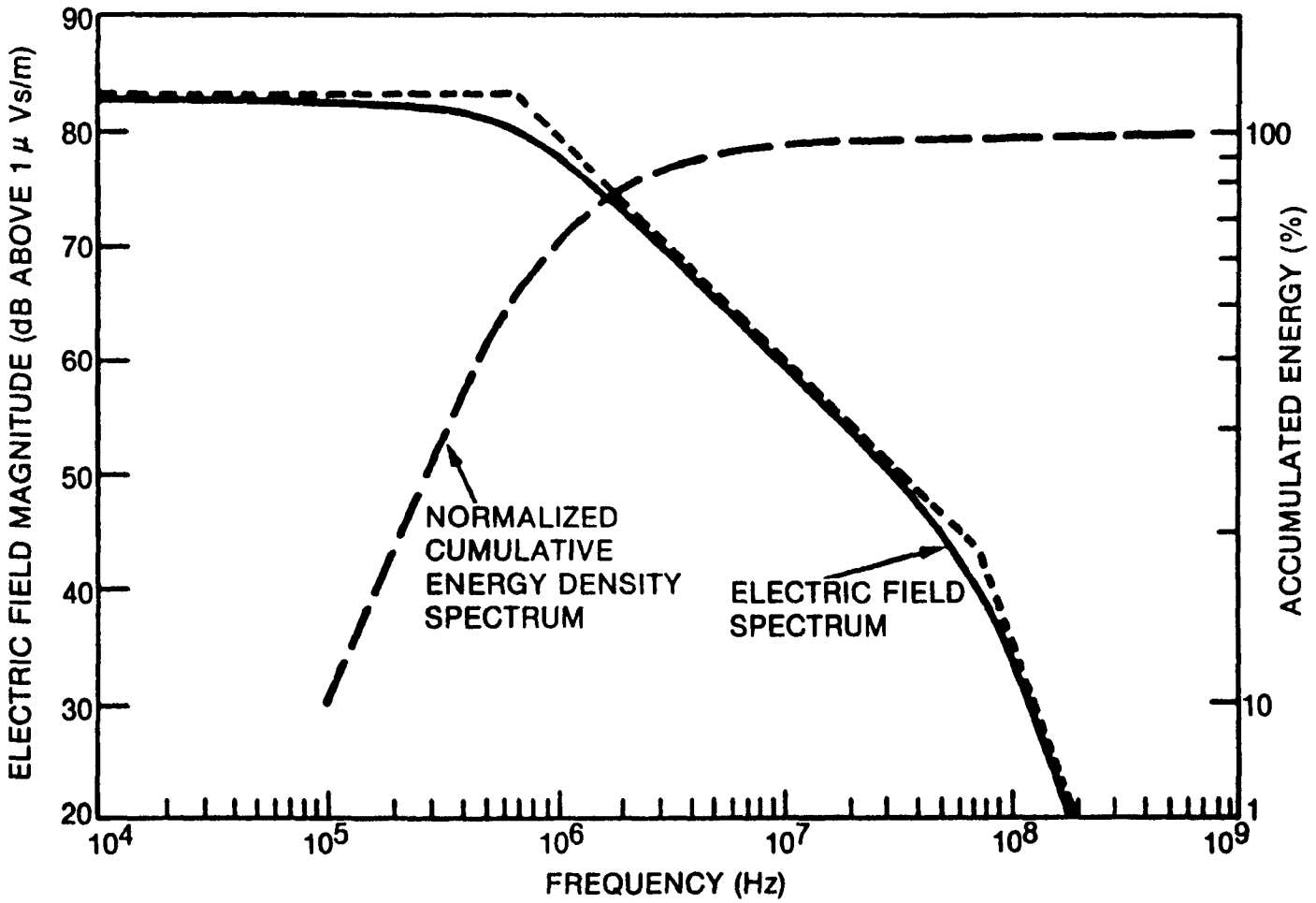

REF: HDL-SR-83-14

Antennas designed to receive signals in the UHF and lower frequency bands can be expected to pick up EMP energy. Any conductor with dimensions greater than about 30 cm (1 foot) must be considered a potential collector of EMP radiated energy. The energy collected by such antennas can be coupled to susceptible electrical or electronic components and can temporarily impair or permanently destroy their ability to function.

Comparing HEMP with more familiar electromagnetic (EM) phenomena, both HEMP and lightning generate large EM fields for a short time and both can induce large voltages and currents on long wires or other conductors. The lightning pulses have much slower rise times (about 100 nanoseconds) and last about a millisecond or so. The faster rise time of the HEMP is one reason that conventional lightning protection devices probably would not be adequate to protect against HEMP. Lightning is a local phenomena and each stroke dissipates its energy easily to the earth, while HEMP is widespread like lightning striking all over the affected area at the same time. The magnetic fields associated with HEMP are similar to those caused by solar-induced magnetic storms which have been known to knock out telecommunications systems.

Coupling of radiated EMP energy into communications facilities can occur by free field diffusion through unshielded enclosures or by any conducting path leading into the facility which may act as a collector. The EM radiation can be collected by conductors by electric induction, like radio waves are picked up by antennas, and by magnetic induction into conductive loops. Conductors buried in the ground can collect energy from the pulse by resistive coupling, even though some of the higher frequencies

are absorbed by the earth. The energy can be converted to strong electric currents and high voltage surges which can cause operational upsets or permanent damage to unprotected electrical or electronic equipment.

Complex computer programs or simulation tests are required to determine the actual voltages and currents induced into an electrical system by postulated EMP fields. Generally, larger conductors collect greater amounts of the EMP energy. Typical collectors of EMP energy which could focus that energy into a communications facility (and its electronics) include: long metallic cable runs (including buried cables), antennas and antenna support towers, metallic waveguides, overhead power and telephone lines, water pipes, fuel lines, air conditioning and ventilation systems, metal fences and grounding systems.

The interference or damage to electronic equipment by EMP depends largely on the amount of EMP energy dissipated within the equipment. For each component there exists a threshold level such that electrical surges or transients greater than that level are likely to affect the component's performance, either in the form of functional damages or operational upset. Functional damage, such as component burn-out, is permanent and would require replacement of the component. Operational upset is temporary and does not require replacement of the part, but could lead to faulty outputs. Some of the electronic components most susceptible to EMP are the types used in state-of-the-art communications equipment. For example, an older type UHF oscillator vacuum tube might require 1 joule of energy to burn it out, while a silicon microwave diode could be burned out by absorbing only 10^{-7} joule - or 10 million times less energy. It only requires about 1

nanojoule of energy to cause circuit upset in integrated circuitry.

Since much of the communications equipment is frequency selective, it will only absorb energy within a limited frequency band. However, it takes very little energy (about 10^{-21} joules) to cause interference in a typical high gain amplifier. The use of extremely high frequencies, above UHF, and lightwave communications, including lasers, are ways to avoid in-band interference from EMP.

Voltage breakdown of the insulation system in electric cables, such as transmitter cables, and power lines is another potential effect from EMP fields. The high voltage from the EMP could easily exceed the safety margins in these stressed insulation components so that signals could be lost and power outages could occur.

Dielectric fiber optic communications cables are not affected by EMP fields and will not carry electrical pulses into the optoelectronics equipment within repeater/switching stations or terminals. However, the optoelectronic equipment must be protected by shielded facilities and against pulses collected by any external conductors just like any other electronic communications equipment.

Technology for protection of communications systems against EMP effects has advanced rapidly and standard devices and techniques are available for hardening high priority systems. Providing EMP protection for new facilities and equipment during the design and construction phases is usually more effective and less expensive than attempting to retrofit

existing systems. Once provided and tested for its effectiveness, EMP protection must be monitored to insure continued effectiveness over the operational life of the system.

The design practices which have proven effective against electromagnetic interference (EMI) generally are applicable for protection against EMP as long as the strong magnetic field component and the high amplitude of the incident field are considered. Eliminating loops, minimizing lengths of conductors, and proper routing of conductors help reduce magnetic pick-up. Proper shielding and grounding of facilities and equipment enclosures, including seams, joints and apertures (openings), and location of equipment can reduce the free field coupling within the enclosures. By proper selection of components, circuit design, and use of surge protection on all incoming and outgoing leads, the susceptibility of the system to EMP effects can be lowered quite a bit.

Problems from EMP can be expected from antennas, long connecting cables, and power lines. Terminal protection devices (TPD) must be provided in these conductive paths which do not adversely affect system performance but are capable of reacting to the fast rise time of the pulse and handling the magnitude of the EMP transients. This probably requires more than one device in series or parallel in the TPD design. Devices used in TPDs include: spark gaps, valve arrestors, varistors, silicon zener diodes, selenium rectifiers, avalanche diodes, carbon blocks, and cut-off filters. Isolation techniques can also be used such as dielectric separators in metallic wave guides. Coupling between conductors can be reduced by separation or rerouting.

Because of the magnitude of potential EMP fields and resultant current surges and since a single shield or TPD may allow enough energy to pass which still exceeds threshold damage levels of susceptible electronic components, several layers of protection in series should be provided between the incident wave and the internal electronic components. For example, successive layers (or zones) of protection can be provided by the site housing (building or structure), intrasite room (shielded equipment vault or computer room), equipment enclosure (cabinet rack or cable shield), and individual component housing. Each zone provides a degree of shielding and TPDs between zones reduces the amount of surge energy reaching the internal components.

The worst case EMP energy threat levels via various access routes to a communications facilty are listed in Table 5.2.2. AC power lines are expected to produce the highest energy surges of 10^7 joules (or 10 megawatt-seconds). The lowest damage level considered in EMP protection guides is 10^{-5} joules (or 10 microwatt-seconds) which is typical of integrated circuits. This means the EMP energy pulse from AC power lines must be reduced by a factor of 10^{12}. This is why multiple layers of protection are required.

Current practices for EMP protection consider it impractical to attempt to protect against the extremely low energy levels required for the transient upset of some equipment. It is assumed that these operational upsets, such as computer faults, can be better handled by operating procedures or fault-tolerant software techniques.

Table 5.2.2

HEMP THREAT LEVELS

EXTERNAL CONDUCTOR PATH	WORST-CASE PULSE ENERGY (JOULES)
AC POWER LINES	10^7
DC POWER LINES	10^6
SIGNAL CABLE	10^5
CONTROL CABLE	10^5
ANTENNA	10^5
WAVEGUIDE	10^5
WATER PIPE	3.2×10^2
SEWAGE DRAIN	3.2×10^2
FUEL LINE	3.2×10^2
AIR-CONDITIONING DUCT	3.2×10^2
GROUNDING WIRE	10^5

REF: HDL-SR-83-14

Protection techniques against EMP for very high frequency or high data rate communications systems are still under development and must be engineered on a case-by-case basis. This least developed area of EMP protection applies to the types of systems thought to be most applicable to SDI C^3I/BM needs.

Even though high altitude nuclear weapon bursts do not produce air blast, thermal, direct radiation or fallout effects to significantly affect ground-based communications facilities, the potential for widespread damage from HEMP effects make them a major threat to such facilities. Such a HEMP attack on the communications system must be considered as a highly probable threat just prior to and/or during an all-out attack on the United States - just when the SDI C^3I/BM system must perform its mission.

5.3 Non-Nuclear Threats

The non-nuclear threats to ground communications links include electronic countermeasures, electronic eavesdropping, acts of sabotage, natural disasters, and accidental damage. Such threats exist for all communications systems at practically any time, not just during periods of open hostilities. However, these threats are especially important for the C^3I/BM systems in support of the SDI program, since its defensive capability must be functional before and during the outbreak of open hostilities.

5.3.1 Electronic Countermeasures

Electronic countermeasures or jamming of operational radio

frequencies by hostile forces is a primary threat to any military communications system. Potentially, C^3I/BM links which depend on radio or microwave transmissions can be disrupted, or jammed, by properly placed high-powered transmitters, even within the U.S. Ships lying off-shore can beam interfering signals against coastal installations and clandestine transmitters can be pre-positioned within range of inland sites for use during the critical missile alert and defense period.

Several types of anti-jamming techniques and equipment are in operational use or under development by the military to counter this threat. These include anti-jam techniques such as direct sequence modulation, time hopping, frequency hopping, burst transmission and packet message transmission. The use of extra high frequencies with small directional beams and reduced side-lobe antenna patterns also make jamming of the signals more difficult.

Laser communications cannot be jammed by electronic signals, but the receivers might be "blinded" by enemy laser sources unless the optics can be protected by filters, collimators, dual mode rejection techniques, etc. Shielded wire transmission cables are relatively immune to normal EMI (i.e., much lower fields than those of EMP) and fiber optic cables are not affected by EMI. However, cables are vulnerable to physical interdiction and/or damage, as discussed later on.

5.3.2 Electronic Eavesdropping

Electronic eavesdropping or any unauthorized interception of

national security communications is a threat which must also be considered. Therefore, much effort is devoted to shielding and preventing access to communications and data processing equipment within secure defense facilities. Secure transmissions are protected by use of dedicated links, by the encryption of messages and data, and by several of the anti-jam techniques listed above. Fiber optic telecommunications cables are especially secure, since they emit no EM signals. Shielding to protect electronic or optoelectronic equipment against EMP will also prevent EM radiations generated by the equipment from escaping the facility.

5.3.3 Sabotage

The physical protection of critical communications facilities and equipment against sabotage takes on increased importance in the design and location of SDI C^3I/BM ground segments. Remote, unmanned telecommunications facilities, such as radio and microwave relay stations and above ground telephone cables, are quite vulnerable to attack by individuals equipped with conventional explosives, small arms, etc. The use of buried and/or concealed systems, multiple or parallel cable routing, redundant satellite ground terminals, and location of critical nodes on government reservations or other places where they can be guarded or access to them can be controlled are some examples of how increased protection can be provided for the most important SDI C^3I/BM ground links.

Exclusion fences, strong vault-type enclosures, and intrusion alarms along with functional status alarms or diagnostic systems should be included in all remote telecommunications facilities which are a part of

the defense system. In those cases where intruders gain access to the site, an early warning will permit security forces and maintenance personnel to make a rapid response to protect or reconstitute the site.

5.3.4 Natural Disasters

Damage to communications facilities from naturally occurring phenomena is usually minimized by the design and siting of the facilites. Damage from electrical and magnetic storms can be avoided by the protection provided against the more severe EMP effects. The damage from windstorms and ice storms, which are particularly damaging to exposed overhead cables, can be avoided through use of underground cables and beefed-up antenna supports (such as for satellite ground terminals), which might also be provided to counter air blast effects from nuclear weapon explosions. Commercial satellite dish antennas are particularly vulnerable to damage from high winds, hail and ice build-up. In severe climates, they must be protected within strong radome-type enclosures.

Reinforced construction and shock-mounting of sensitive equipment, which are useful against nuclear weapon blast effects, will provide some protection against natural earthquakes. Location of communications sites away from flood plains and particular attention to protection of cables crossing streams and rivers will prevent inundation of facilities and damage from floating debris during a flood. High water tables should also be avoided in siting an underground facility because of increased ground shock effects from nuclear weapon explosions in such areas.

Fireproof or underground systems should be adequate protection against naturally caused fires. Overhead power and telephone lines on wooden poles are particularly susceptible to damage from brush and forest fires and falling trees or limbs, requiring increased maintenance costs to periodically clear the right-of-way of such growth.

5.3.5 Accidental Damage

Telecommunications cables and power lines are routinely victims of unintentional or accidental damage, in many cases because they are routed along roadways, railroads, etc. Motor vehicles frequently collide with power and telephone poles causing local outages as well as trunk line interruptions. Underground cables are often severed by construction and road building crews. In a defense system, there is a trade-off in marking the location of an underground cable to prevent inadvertant damage and telling a potential saboteur where the cable is. This is even more critical with fiber optic cables which cannot be located with ordinary metal detectors like coax cables.

Many of the newly installed commercial fiber optic telecommunications systems are being laid along existing railroads to economize on the costs of acquiring right-of-ways. Railroads are built on relatively direct routes between population centers - just where the larger telecommunications markets are. Defense systems should consider that railroad tracks are some of the better collectors of EMP and that railroads, as are major highways, are prime targets for disrupting a nation's transportation system.

6.0 POWER SYSTEMS FOR C^3I/BM GROUND SEGMENTS

This section includes a discussion of the power sources being used in exisiting C^3I systems, including the public power grid, uninterruptible power systems, and independent power soursces. Considerations in selecting a survivable power system for SDI C^3I/BM ground segments are also discussed.

6.1 Public Power System

Nearly all of the military and commercial telecommunications systems in the U.S. are powered by the nation's public utility power grid. Since most commercial telecommunications systems provide services between and among populated areas where there is also public utility power available, it is most economical to use this power for normal telecommunications operations. This is also true for most military communications systems which use government-owned or leased commercial equipment.

Nuclear weapon tests have shown that the weak link in the communications system's chain is the electrical power grid. Not only are the above ground power transmission lines highly vulnerable to physical damage by nuclear blast effects, but nuclear radiation effects can cause insulation system break-downs resulting in local power outages and oscillatory shut-down of a portion of the grid. Most significantly, the long, overhead power lines are good collectors of EMP energy, imposing the greatest conductor surge threat to communications equipment connected to

the power grid. EMP is a wide area effect which could potentially knock out the entire power grid all at once.

Normal day-to-day disturbances in utility power are caused by lightning, icy weather, cable failures, load switching, etc. The power disturbances include voltage transients, momentary interruptions, voltage dips, brownouts, frequency variations and complete power failures (or outages). While such power fluctuations are harmless to most electrical equipment, they can cause severe malfunctions, alterations of data, and shut-downs in computers and all equipment controlled by microprocessors, including modern telecommunications equipment. Since these disturbances cannot be economically eliminated from the public power grid, power protection equipment has been developed for use in critical systems which employ devices that are sensitive to the power fluctuations or which cannot tolerate disruptions in operation - such as national security telecommunications systems. The power protection equipment then becomes an integral part of any communications site which normally depends on power from the utility grid. It is also available for use in protection against site power losses due to nuclear threats; but it must also be protected against such threats.

6.2 Uninterruptible Power Supplies

Several types of power protection equipment are available, each with its capabilities and limitations in handling the power problems of any particular application. Only an on-line or standby independent power source can handle a grid power failure or outage. Uninterruptible Power

Systems (UPS) provide a high degree of protection since they keep the system in operation during interruptions in utility power and can prevent power fluctuations from being imposed on sensitive loads.

For continuous service, various types of UPS are provided for existing telecommunications sites. Battery plants with several hours of reserve power are standard equipment at smaller sites and engine generator sets are used to back up the batteries at larger installations, depending on the size of the load and the length of time the protection is required.

A UPS may be defined as a power system which uses input from a local utility, batteries, or a standby generator to transform an irregular or undependable source of power into well-regulated, uninterrupted power for critical loads. All UPS can be divided into two major classes: static and rotary. A static UPS utilizes electric storage batteries, while a rotary UPS relies on a motor/generator, backed up by batteries or an internal combustion engine. The UPS can be operated in two modes. A continuous, on-line UPS converts the commercial AC power to filtered, regulated AC power to the load with a battery source connected at all times to provide instantaneous backup when the commercial power fails. A standby UPS is not connected to the load and must be switched into the load circuit when the primary power goes off or drops to a low voltage level. A standby UPS will not prevent fluctuations in utility power from reaching the load as is the case with an on-line UPS. There is also a risk of power interruption to the load while the standby system is being connected. The best guarantee against start-up failures of a standby engine generator set is to provide redundant backup set(s) where the application justifies it.

The main elements of a static UPS (see Figure 6.2) are a rectifier (battery charger), inverter, bypass switch, battery and control logic. The rectifier converts the AC line power to DC which is fed to the inverter to maintain the load and which charges the battery bank as needed. The battery bank contains the number of cells needed to provide the voltage required by the inverter and the capacity to power the load for the desired period of time (usually a matter of hours). Most small telecommunications sites use sealed maintenance-free lead acid batteries which can power the load for 4 to 8 hours. Larger sites provide enough battery capacity to allow for continuous operation while a standby generator can be started and brought on line or the situation can be assessed and an orderly shut-down of the system can be accomplished, if the situation calls for that.

The key element of the UPS is the inverter. The inverter transforms the DC power from the rectifier or the battery to AC power for the load, at the proper voltage and frequency. Thus utility power fluctuations and interruptions are eliminated. The bypass switch allows the load to be switched from the inverter output to an alternate AC line, either from the utility or from a standby generator, in the event of a failure in the UPS or to accommodate large load changes. The control logic maintains synchronization of the AC power on the system, senses deviations in power and controls the switching functions.

A motor/generator (or rotary) UPS includes an electric motor, driven by utility power, which turns a generator for the power output to the load. Electric motors are relatively insensitive to transients in line

Figure 6.2

STATIC UNINTERRUPTIBLE POWER SYSTEM (UPS) BLOCK DIAGRAM

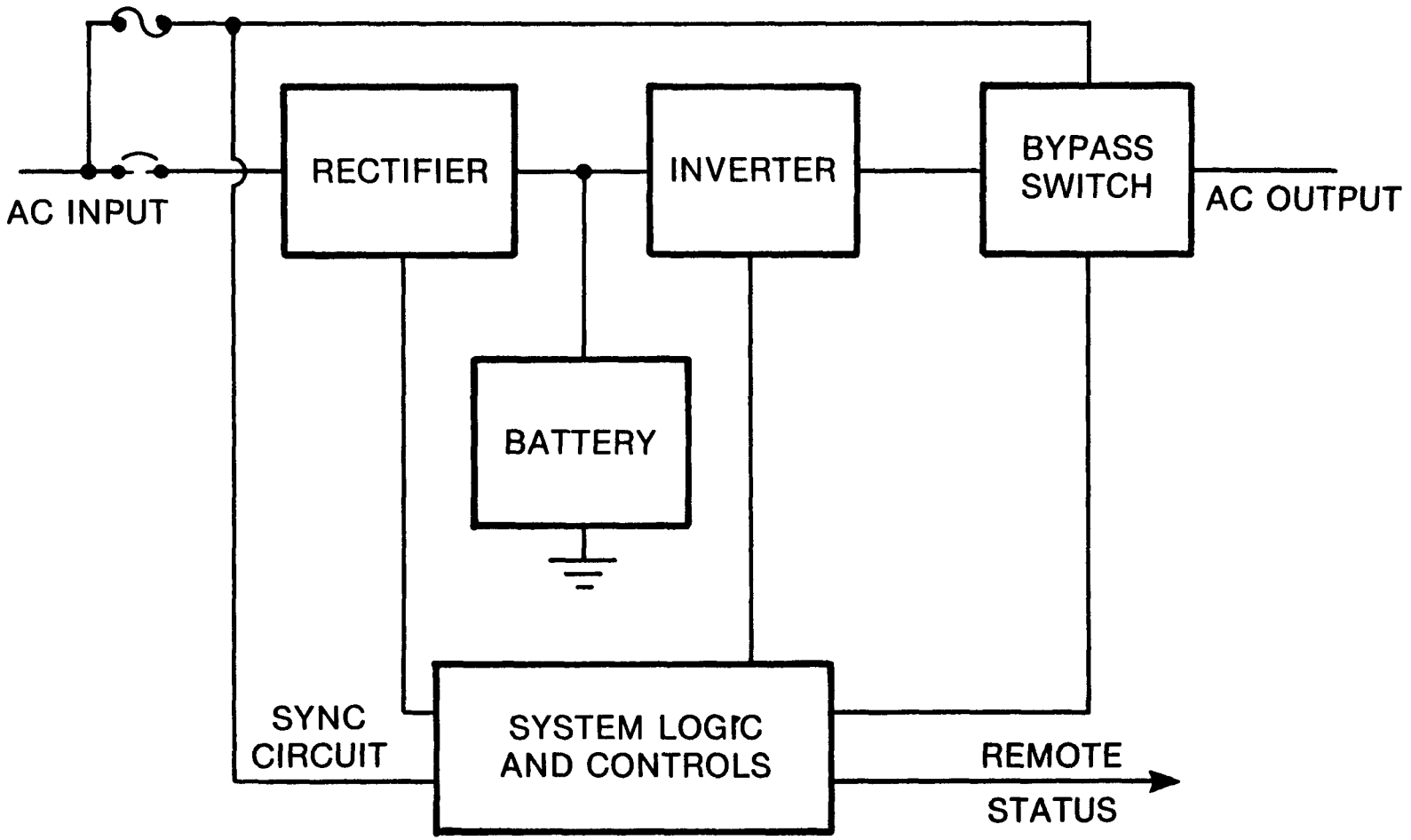

voltage and their momentum permits them to coast through momentary interruptions in utility power while the generator continues to provide the electricity required by the load. The motor/generator can provide regulated power for longer periods of power outage by including a flywheel in the system to store additional momentum or by driving the motor with a battery (through a DC/AC converter). A standby engine generator can be used to drive the motor/generator UPS for extended power outages. The UPS must provide power to the load long enough for the standby generator to come on line. The engine generator can keep the system operating as long as fuel is supplied to it.

Other types of standby sources of power are also available. For low power requirements, propane fired thermoelectric generators and solar photovoltaic power sources have been used. For larger power needs, fuel cells and fossil fueled dynamic conversion systems are options for standby power sources. For very large installations, diesel or turbo-generators are just about the only alternatives available, short of a complete on-site power generating plant.

The UPS for a defense communications site must be hardened against nuclear weapon effects if it is going to contribute to the overall survivability of the communications system. Since the elements of a UPS include solid state devices which are directly connected to the utility power lines, they are subject to damage by line surges caused by EMP unless the terminal protection system provided on the incoming lines is extremely effective, i.e., it can reduce the energy pulse to the same degree that it must to protect the communications electronics. The sensitive components

of the UPS must also be shielded against nuclear radiation effects. Batteries can withstand much larger energy pulses before sustaining significant damage. However, batteries used in power substations were severely damaged by blast effects during nuclear weapon tests. As a result, a static UPS must be protected just like the rest of the electronic equipment.

Motor/generators are much more rugged and less susceptible to damage by electrical power surges. However, if the electronic controls for the rotary UPS use solid state devices, they must be adequately protected. Fuel-burning engine generator sets introduce additional hardening problems at a site. The size, noise, air and fuel supply, and exhaust products associated with these generator sets lead to larger, and usually separate, facilities for housing and maintaining them. The air supplies, exhaust ducts, fuel lines, and connecting power cables require special attention in siting the equipment and shielding it against blast and EMP effects. Above-ground sites require added blast protection. Underground sites require additional apertures and ducts (or lines) for operation of the fuel-burning engine. Unprotected fuel storage systems have been shown to be vulnerable to nuclear blast effects, especially flying debris. Similar site hardening concerns apply to any open-cycle, fuel-burning standby power source requiring an air supply.

6.3 Independent Power Supplies

There are many telecommunications sites and other installations remote from population centers where power is required and local utility

power is not available. For these remote sites, power line extensions can be installed, power can be supplied through the communications cable (e.g. for cable repeaters) from larger installations, or independent power supplies can be provided for the facility (e.g. a microwave relay station).

All sorts of long-lived, reliable independent power supplies are currently in use by telecommunications systems in various arctic, mountainous, and desert regions where utility power is not accessible or economically feasible. For example, there are propane fired thermoelectric generators used with microwave relay stations in the Rocky Mountains; solar photovoltaic and solar organic Rankine power units operating in desert regions; propane fired organic Rankine power units providing communications along the Alaskan pipe line; and Strontium - 90 fueled Radioisotope Thermoelectric Generators (RTGs) are in use by the Federal Aviation Administration for aircraft communications in Lake Clarke Pass, Alaska. Plutonium- 238 RTGs have also been used in classified communications applications.

Multiple diesel or gasoline fueled generator sets are in use at, or planned for, many remote C^3I/BM sites where larger power levels are required, such as the small unmanned radar sites in the North Warning System. Larger remote manned sites include industrial type power plants for communications as well as other power needs.

There has been little standardization of communications sites or their power supplies except for portable (or mobile) military

communications units. Generally, each site (or system) is designed to meet its own operational requirements.

6.4 Selection of Power Systems for SDI C^3I/BM Ground Segments

In selecting a power system for a critical, survivable, secure, reliable and enduring C^3I/BM ground segment for the SDI program, one must consider the operational requirements of the segment, its importance in relation to other segments of the system and its contribution to the cost-effectiveness of the system. The operational requirements for each site in the segment must be considered as part of the integrated system to accomplish the ballistic missile defense mission. Selection of a power system at a particular C^3I/BM site must consider the power level and the quality requirements, the duration of self-sustaining power, whether the site is manned or unmanned, the location of the site, the number of sites in the system, the degree of hardness required against nuclear and other threats, the cost of installing and maintaining the site over its life cycle, etc.

A telecommunications system which includes many small, low-powered, unmanned repeater or relay stations between a much smaller number of larger, manned installations requires different power systems for the two types of sites. A small repeater site can be provided with a long-lived, independent power system in a hardened site, whether remote or not, much easier and cheaper than a large, manned installation. By making these small sites independent of the power grid, a large EMP threat would be eliminated and the cost (and uncertainty) associated with EMP terminal

protection devices, which are comparable to those needed for any utility powered facility, would be obviated for the most numerous types of sites.

The reliability and endurance of the unattended power system are extremely important to an operational defense communications system which must always be ready to thwart an attack and which must operate during and for some time after such an attack without assurance of early access by maintenance personnel. For example, the 4 to 8 hours of battery reserve power currently used in most small telecommunications sites (without standby generator backup) may be adequate for normal peacetime power outages and response by maintenance personnel from a nearby manned installation. However, such a small energy storage system seems to be inadequate for use in reconstitution efforts after a nuclear attack, especially in contaminated areas. Of course, if the power system or communications equipment does not survive the EMP or other nuclear effects, then the duration of the reserve storage system is less important.

For manned installations, much larger power levels are required not only for the communications equipment but also to support a manned environment. A hardened facility to protect operating personnel is much more complex and costly than one to protect only equipment. The use of large engine generator sets, which require more maintenance to keep them operational, is acceptable for a large facility with maintenance personnel on-site.

The energy sources for an independent power supply include fossil fuels, other chemical fuels (e.g., hydrogen), solar energy, and nuclear

energy sources. Fossil fueled generators are widely used and the best known. They require an air supply and produce exhaust products which must be removed. They require periodic refueling and maintenance schedules based on the power level, whether static or rotating power conversion equipment is used, and the difficulty in providing logistical support.

Chemical fuel cells involve relatively new technologies, but have recently demonstrated adequate lifetimes to be considered for long-lived, quiet, independent power sources for terrestrial applications. Open-cycle fuel cells require an air supply and exhaust system, but require only storage of the hydrocarbon fuel. The fuel-to-electricity conversion efficiency for a fuel cell is higher than for other static conversion systems, dynamic turbo-electric systems, or internal combustion engine generator sets; thus the fuel storage requirements are smaller. Closed-cycle fuel cells which burn hydrogen and oxygen to form water, heat and DC electricity lend themselves to an enclosed facility such as an underground vault, but the volume required for storage of the reactants (fuel and oxidizer) is much larger. Fuel cells include electronic control circuits (and DC/AC inverters for AC loads) which must be protected like any other electronic equipment.

Solar powered systems are subject to variations in the solar energy reaching the earth and therefore are not predictable enough for continuous power applications in most locations. The exposed solar energy collectors are susceptible to and cannot be protected against many nuclear weapon and natural threats.

Self-contained nuclear energy sources have been developed which can be combined with various power conversion systems to provide compact unattended power systems which are relatively independent of the environment, are inherently hard to nuclear effects, and have long maintenance-free operational lifetimes to offset relatively high initial costs. Isotope heat sources are used in low-powered systems; self-controlled nuclear reactor heat sources are more suitable for higher-powered systems. Compact nuclear power systems must be considered in choosing an independent power source for any unmanned, survivable site and should be considered as a viable option for large manned installations where an independent, long-lived power system is required.

7.0 TERRESTRIAL ISOTOPE POWER SYSTEMS

Over the past twenty-five years the United States has demonstrated the safe use of Radioisotope Thermoelectric Generators (RTGs) in numerous terrestrial applications, both government and commercial, where reliable, long-lived power systems are required to operate under extreme environments and/or difficult logistics or supply conditions. In addition, some three dozen RTGs have been used on U.S. space missions during the same 25-year period. Several other countries also have active isotope power system applications programs.

There has also been a continuing investigation of the more efficient dynamic isotope power systems for space and terrestrial applications requiring power levels between those best served by RTGs and compact nuclear reactor power systems.

7.1 Low-Powered RTGs

During the early 1960's, the U.S. Atomic Energy Commission (now the Department of Energy or DOE) developed and demonstrated the use of Strontium-90 (Sr-90) fueled RTGs as power sources for government weather stations located north of the Arctic Circle, in Antarctica near the South Pole, and in a buoy on the Gulf of Mexico; and for navigational aids in a Coast Guard buoy and lighthouse on the Chesapeake Bay, on an industrial oil rig in the Gulf of Mexico, and in a Navy acoustic beacon on the floor of the Atlantic Ocean off Bermuda. These first-generation RTGs led to the first commercially available generators of this type starting in the

mid-1960's. Since then, dozens of these commercial RTGs, ranging in power levels up to 100 watts, have been procured for use by the Navy, Air Force, Federal Aviation Administration and industry to power instrumentation, telemeter data, and relay communications at various remote terrestrial locations, accumulating a maintenance-free record of over 5 million generator-hours without a failure. One 25-watt RTG powered a Navy surveillance station on Fairway Rock in the Bering Strait for nearly 130,000 hours or almost 15 years from 1966 to 1981, when it was replaced with 2 RTGs for powering a larger station.

An RTG consists basically of six components: an encapsulated radioisotope heat source, thermal insulation, a thermoelectric converter, a housing, heat rejection fins, and a biological radiation shield (if required). The physical arrangement of these components is illustrated in Figure 7.1-1. Heat is generated within the heat source as the particles emitted during spontaneous decay of the radioisotope fuel are slowed down in collisions with the surrounding fuel or fuel capsule. The thermal insulation minimizes the direct heat losses, increases the temperature of the heat source, and channels most of the heat to the hot side of the thermoelectric converter. As the heat passes through the converter, a portion of it is transformed into DC electricity by thermoelectric elements. The unconverted, or waste, heat is conducted to the housing and fins where it is rejected to the surrounding environment. The electrical current flows from the converter through the power cable to the load. The entire system is static, i.e., it has no moving parts, providing a quiet, compact, rugged, and reliable power source with a lifetime primarily dictated by the decay rate or half-life of the fuel.

Figure 7.1-1

SCHEMATIC OF TERRESTRIAL RADIOISOTOPE THERMOELECTRIC GENERATOR (RTG)

1. FINNED RADIATOR (REMOVABLE)
2. THERMOELECTRIC MODULE
3. GENERATOR HOUSING
4. FUEL CAPSULE
5. Sr-90 FUEL
6. RADIATION SHIELDING
7. THERMAL INSULATION

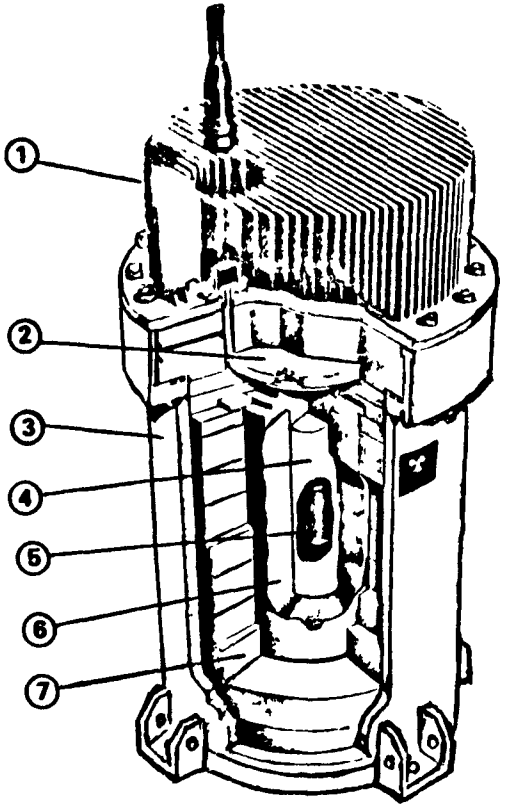

The principal radioisotopes used in RTGs are Sr-90 and Plutonium-238 (Pu-238). Differences in their decay characteristics (i.e., type of emissions or radiation levels, half-lives, power density, etc.), availability and costs determine which fuel is to be used in a particular application. Pu-238, predominantly an alpha emitter with an 87-year half-life, has a high power density and a low external radiation level. Little or no biological shielding is required, thus permitting a very light-weight generator. Therefore, Pu-238 has been used extensively in spacecraft applications and has only been used in terrestrial applications where generator weight and size restrictions could justify the costs. Pu-238 has a limited availability and requires costly operations for its production in nuclear reactors and subsequent processing. Sr-90, a beta emitter with a 28-year half-life, has a lower power density and a high external radiation level necessitating a heavy biological shield. Sr-90 is produced in relatively large quantities as a byproduct in nuclear reactor fuel processing wastes and can be recovered at a much lower cost/watt than can Pu-238. Therefore, Sr-90 is the primary fuel choice for terrestrial applications where generator size and weight are not limiting.

The early RTGs employed strontium titanate ($SrTiO_3$) as the fuel form because of its high melting point (1910°C), its chemical stability, and its low solubility in natural water and seawater. Later on, the fuel form was changed to strontium fluoride (SrF_2) because of its compatibility with waste processing and recovery operations. SrF_2 is easier and cheaper to produce without sacrificing much in operating temperature (1473°C melting point), chemical stability or solubility. The fluoride fuel form also has a somewhat higher power density than the titanate.

The Sr-90 fuel form is doubly encapsulated in a liner and a strength member to form a heat source. Both capsules are hermetically sealed by welded closures. The liner and strength member are made of high strength superalloys, such as Haynes-25 or Hastelloy, which are compatible with the fuel and are oxidation and corrosion resistant in natural environments. The fuel capsule is designed, and tested, to meet the impact, puncture, fire, thermal shock and pressure test criteria specified in the International Atomic Energy Agency (IAEA) Safety Series No. 33 for terrestrial RTGs. These test requirements meet or exceed those specified by the Nuclear Regulatory Commission (NRC) in accordance with Title 10, Code of Federal Regulations, Part 71.

Bremsstrahlung (x-ray or gamma) radiation is given off during the slowing-down of the beta particles emitted during decay of Sr-90 and its daughter product, Yttrium-90. Therefore, heavy (thick) shielding is required around a Sr-90 heat source to reduce the radiation levels on the outside of the RTG to those required for personnel protection. A good shield material can be any dense, high atomic number material which can withstand the operating temperatures of the shield. Depleted uranium, iron, and tungsten alloys have been used as shields in Sr-90 RTGs. Since the radiation shielding effectiveness is a function of the thickness of a given shield material, the volume, weight and costs are smallest for an RTG shield that is closest to the heat source, i.e., immediately surrounding the fuel capsule, within the thermal insulation. In this case the shield acts as a heat accumulator block to smooth out temperature distributions and transients, but also causes the fuel capsule to run somewhat hotter.

An internal shield permits installation or replacement of the thermoelectric converter assembly without a remote, hot cell operation.

If the RTG includes a thick pressure vessel for a housing, e.g., for deep-sea applications, the housing can also be considered part of the shield so that the inner shield can be smaller. The shield is sized so that the radiation levels external to the RTG do not exceed the limits specified by the Department of Transportation (DOT) and the IAEA requirements for national and international transportation, respectively. The radiation levels for these small RTGs are always less than 100 mr/hr a foot or so from the generator. This requires an equivalent of 5 to 10 cm (2 to 4 in) of tungsten shielding.

Thermal insulation is used around the inner shield to reduce heat losses and to funnel the heat to the thermoelectric converter. Bulk insulations of various types are used in terrestrial RTGs. To support the weight of the heat source and shield and the preload forces required to hold the components in place during shocks and vibration encountered during shipment and use, a rigid insulation, such as fused silica foam, with a high compressive strength is required. The more efficient Min-K type fibrous insulation can be used where the compressive loads are not encountered.

The thermoelectric converter is an assembly of many thermoelectric couples. Each couple contains an "n" element and a "p" element, thermally in parallel and electrically in series, joined by a metallic hot shoe. Couples are connected to other couples through metallic cold shoes. When a

temperature gradient is established across the couple, a Seebeck voltage is created which will cause a current to flow through an external circuit. The thermoelements are of the telluride type (e.g., PbTe or TAGS) which typically operate between a hot shoe temperature of 510-538°C (950-1000°F) and a cold shoe temperature on the order of 93°C (200°F) or less. This produces a thermoelectric efficiency of 7-9% and an overall generator efficiency of 6-8%. The couples are spring loaded to hold them in place and to minimize thermal and electrical resistances at the interfaces. Electrical connections are made on the cold side to collect the electricity produced and conduct it to the power output cable. The couples can be connected in series and parallel to produce the optimum conversion efficiency and the necessary reliability for long operating lifetimes.

RTGs produce a relatively high current, low voltage DC output which can be matched to the load requirements by a DC/DC converter,(or DC/AC inverter), -regulator or power conditioner. The power conditioner also matches the impedance seen by the RTG for maximum power transfer by maintaining a constant load on the RTG via a variable shunt resistor load. Over the operating life of the RTG, as the fuel decays, less heat is produced and the temperature profile across the thermoelements is lowered causing the power output to drop off somewhat faster than the decay curve of the heat source. For example, over 10 years the Sr-90 fuel will decay to about 78% of its beginning of life (BOL) thermal output, while the power output of the RTG would be about 70% of the BOL value.

The thermoelectric converter is usually sealed in a bellows type container to control the environment for the thermoelements. Telluride

thermoelements will sublime in a hard vacuum and oxidize in air at the operating temperatures, causing them to degrade in performance. They can also be contaminated by any residual off-gases released from the other internal generator components, such as the bulk insulation. To prevent this, they are operated in a low-conductivity inert cover gas (e.g. argon).

Under an external short condition, RTGs operate somewhat cooler on the hot side due to the Peltier cooling of the higher short-circuit current. Upon removal of the short, they return to normal operating conditions. Under open-circuit conditions; an RTG will run somewhat hotter in order to reject all of the heat from the heat source, instead of the normal 92-94% waste heat.

The RTG housing is designed to structually support and protect the generator components for the intended application and to remove the waste heat from the thermoelectric assembly(ies). It can be made of heavy gage aluminum for land uses or it can be a steel pressure vessel for deep sea operations in which it can withstand pressures up to 15,000 psi. The housing also includes mounting brackets and lifting/tie-down lugs to facilitate handling, transportation, and installation of the RTG.

Heat rejection fins are usually attached to the housing to assist in removing the waste heat to an ambient air environment. Auxiliary cooling techniques, such as pumped loops or heat pipes, can be used to reject the heat in a more insulating site or to utilize the waste heat for thermal control of instruments, electronics, etc., such as in an arctic application.

Although other U.S. companies have produced Sr-90 RTGs in the past, the only commercial producer of such RTGs in the U.S. today is Teledyne Energy Systems (TES), located in Timonium, MD. TES offers a line of standardized Sentinel generators over a range of power levels on a fixed price basis with power warranties for periods up to 10 years. TES manufactures its own generators, thermoelectric converters and fuel capsules. The Sr-90 fuel is supplied and loaded into the fuel capsules by the DOE. Lead times for delivery are on the order of 6-9 months. TES is licensed by the NRC to handle encapsulated fuel and fueled RTGs and can assist a user in obtaining any necessary licenses for intended applications, including exports to foreign (Western Bloc) nations.

Figure 7.1-2 shows the characteristics of a Sentinel 25E RTG with a steel housing designed for deep-sea use and can produce up to 32 watts after 5 years. Figure 7.1-3 illustrates the Sentinel 25F and 100F models with lighter aluminum housings for land and shallow water applications. These are available in sizes up to 150 watts after 5 years. Smaller standard models are also available and licensed.

7.2 High-Powered RTGs

The DOE is currently developing a 500 watt Sr-90 RTG designed to utilize the Sr-90 storage capsules from its Waste Encapsulation and Storage Facility (WESF) in Hanford, WA. This effort is part of the Byproducts Utilization Program (BUP) under the DOE's Defense Programs. The DOE's contractor for the BUP-500 RTG program is TES. The BUP-500 generator was fueled in August 1986 at the Oak Ridge National Laboratory (ORNL) and had

Figure 7.1-2

SENTINEL 25E * CHARACTERISTICS

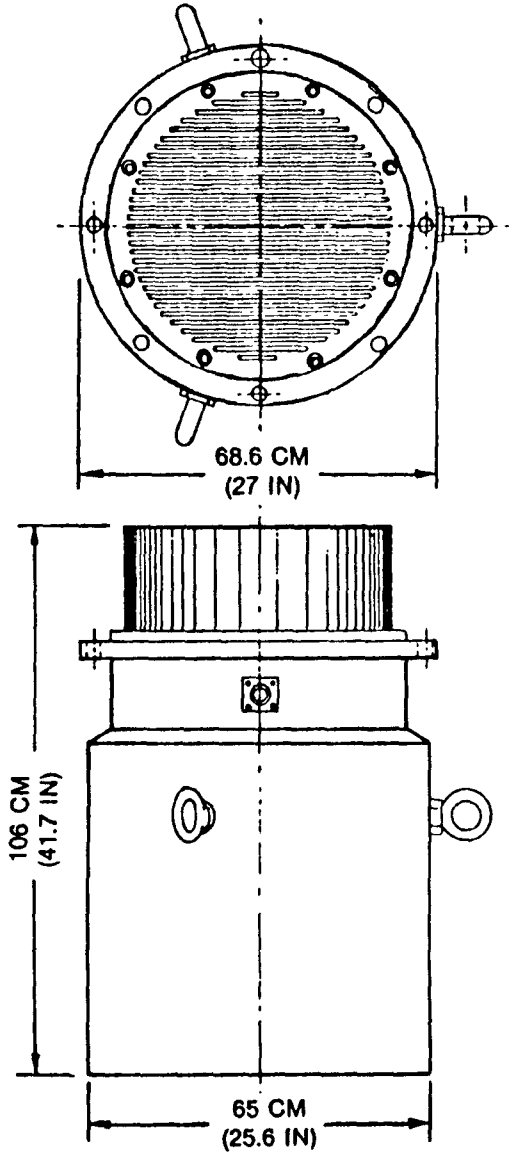

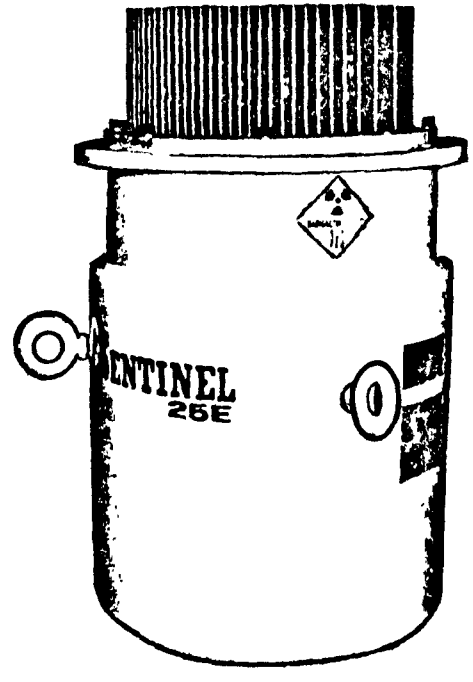

POWER OUTPUT	32 WATTS AFTER 5 YEARS 25 WATTS AFTER 10 YEARS
WEIGHT	1905 KG (4200 LB)
HOUSING MATERIAL	CARBON STEEL
SURFACE RADIATION	100 MR/HR
OPERATING LIMITS IN AIR	−40 TO +50°C (−40 TO +122°F)

*SENTINEL IS THE TRADENAME OF TELEDYNE ENERGY SYSTEMS

Figure 7.1-3

SENTINEL * F SERIES CHARACTERISTICS

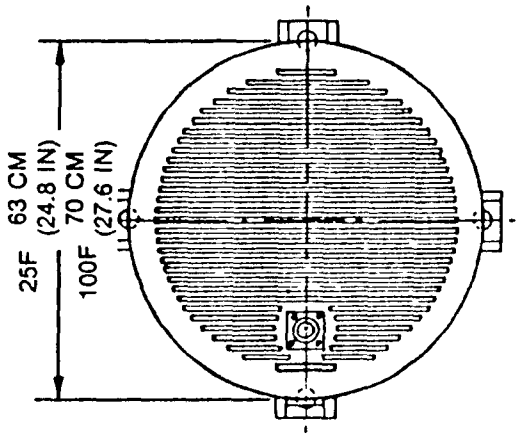

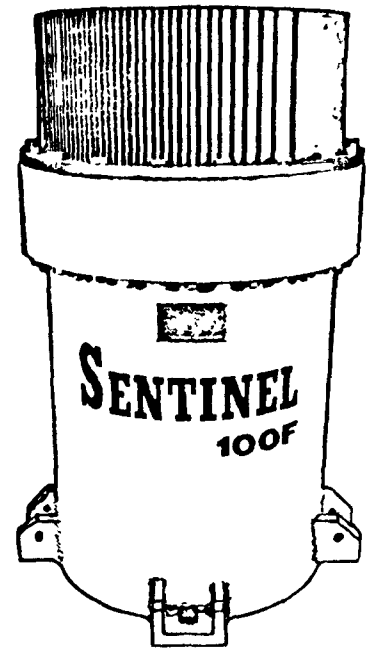

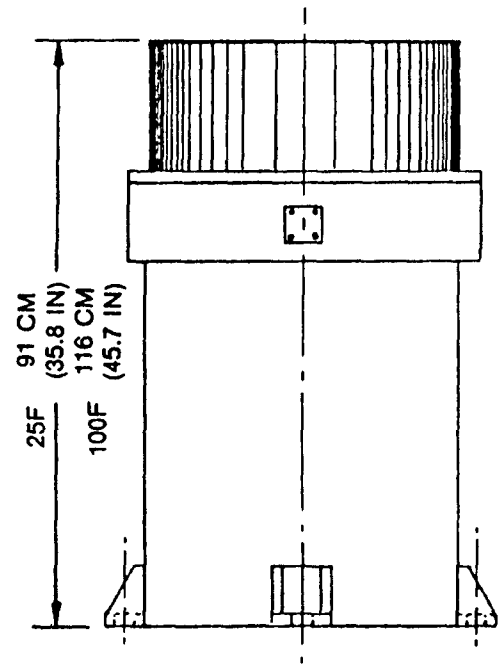

	25F	100F
POWER OUTPUT (AFTER 5 YRS)	UP TO 32 WATTS	UP TO 150 WATTS
WEIGHT	650 KG (1433 LB)	1275 KG (2811 LB)
HOUSING MATERIAL	ALUMINUM	ALUMINUM
SURFACE RADIATION	200 MR/HR	200 MR/HR
OPERATING LIMITS IN AIR	−40 TO +50°C	(−40 TO +122°F)

*SENTINEL IS THE TRADENAME OF TELEDYNE ENERGY SYSTEMS

an initial power output of 650 watts, some 6.5% higher than the design BOL power level.

The BUP-500 generator program is directed at demonstrating the feasibility of extrapolating the well established low-powered Sr-90 RTG technology into higher power levels required for many defense applications. One of the potential uses for the BUP-500 involves providing power and heat for emergency shelters for visiting repair crews at the unmanned radar sites in the North Warning System. An equally important objective of the program is to promote the beneficial use of defense nuclear waste byproducts.

The BUP-500 RTG consists of multiple SrF_2 heat sources within a tungsten alloy radiation shield, six thermoelectric converter assemblies mounted around the sides of the shield, thermal insulation, and a finned cylindrical aluminum housing, (see Figure 7.2-1). It is designed to produce at least 500 watts (at 28VDC) at the end of its five-year design life. Beyond that, the power output is expected to decrease at the rate of only a few percent per year. The BUP-500 weighs 3,220 kg (7,100 lbs); its height is 1.18 m (3.87 ft); and its diameter is 1.52 m (5 ft). It is designed to meet all NRC, IAEA, and DOT standards and regulations.

The shield is designed to accommodate various grades of Sr-90 fuel (i.e., fresh or aged fuel) requiring 3 to 7 fuel capsules to make up the 7,500 watt heat source. The only change in design is the number of fuel capsule cavities to be drilled into the shield block. The shield, with three 2,500 watt fuel capsules installed, is 51.8 cm (20.4 in) in diameter

Figure 7.2-1

EXPLODED VIEW OF BUP-500 RTG

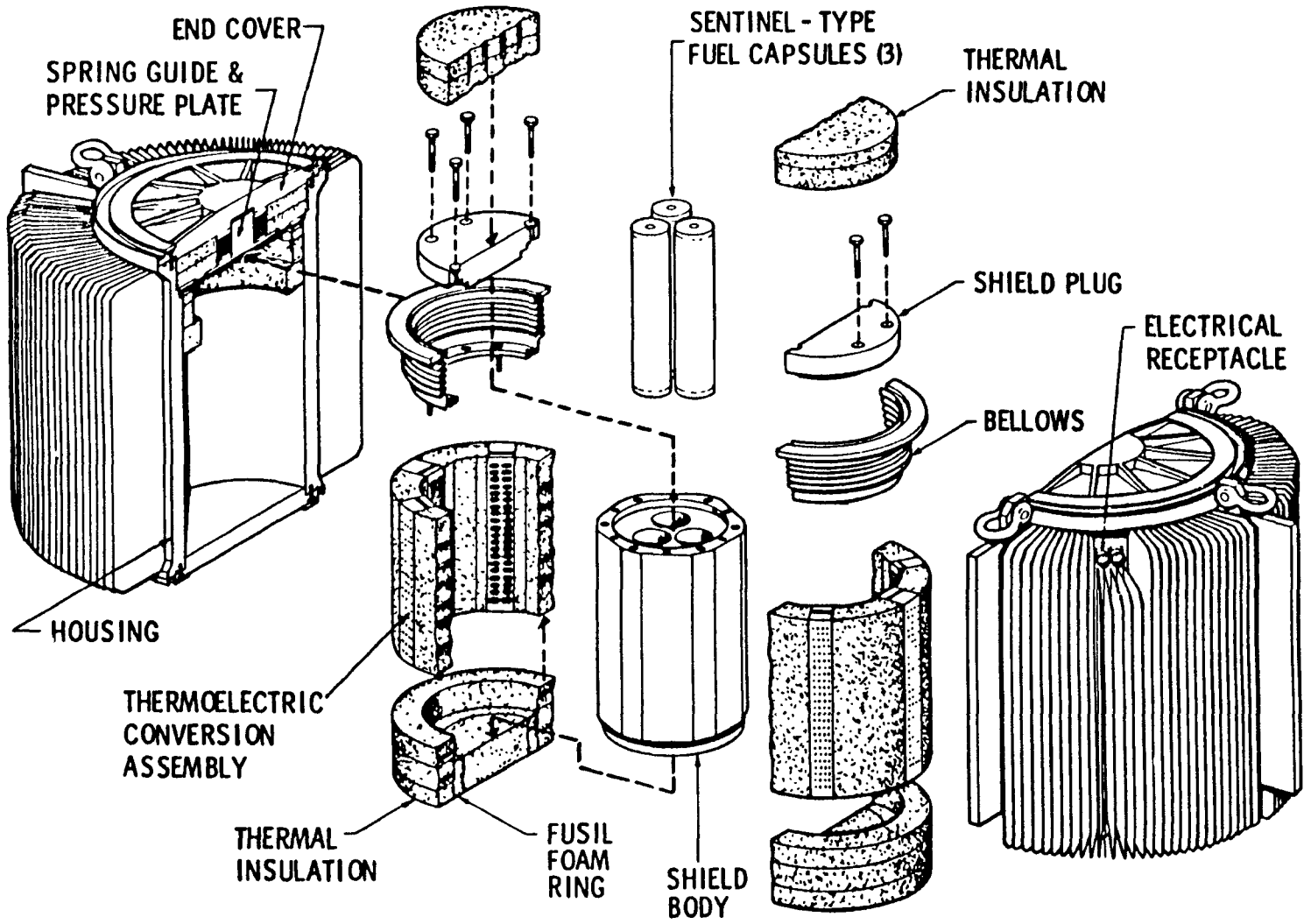

COURTESY: TELEDYNE ENERGY SYSTEMS

and 72.6 cm (28.5 in) high and weighs 2,313 kg (5,100 lbs). The radiation levels at the surface of the BUP-500 shipping container are 35 mr/hr or less.

A drawing of the BUP-500 RTG in its shipping container is shown in Figure 7.2-2. The shipping container is designed for transporting the generator, but it is also intended that it will serve as an operating stand. The tubular aluminum framework, covered with expanded metal to allow free air circulation, includes isolation mounts to attenuate shocks encountered during transportation, handling, and use. The container weighs 345 kg (761 lbs). The unit can be handled with a fork lift or by lifting/tie down lugs.

This large RTG has all the ruggedness and reliability associated with smaller RTGs with a somewhat lower unit cost/watt expected. However, the overall conversion efficiency for a thermoelectric generator is still only about 8% and the size of the unit is large due to the large amount of waste heat to be rejected. Better use of the Sr-90 fuel could be made by using a more efficient power conversion system. The need to reject less waste heat would result in a more compact power unit, especially to meet a power need of a kilowatt or more for which multiples of the BUP-500 would be required.

7.3 Dynamic Isotope Power Systems

Dynamic power conversion systems involving the use of rotating turbogenerators and reciprocating piston engines have been investigated for

Figure 7.2-2

BUP-500 RTG IN SHIPPING CONTAINER

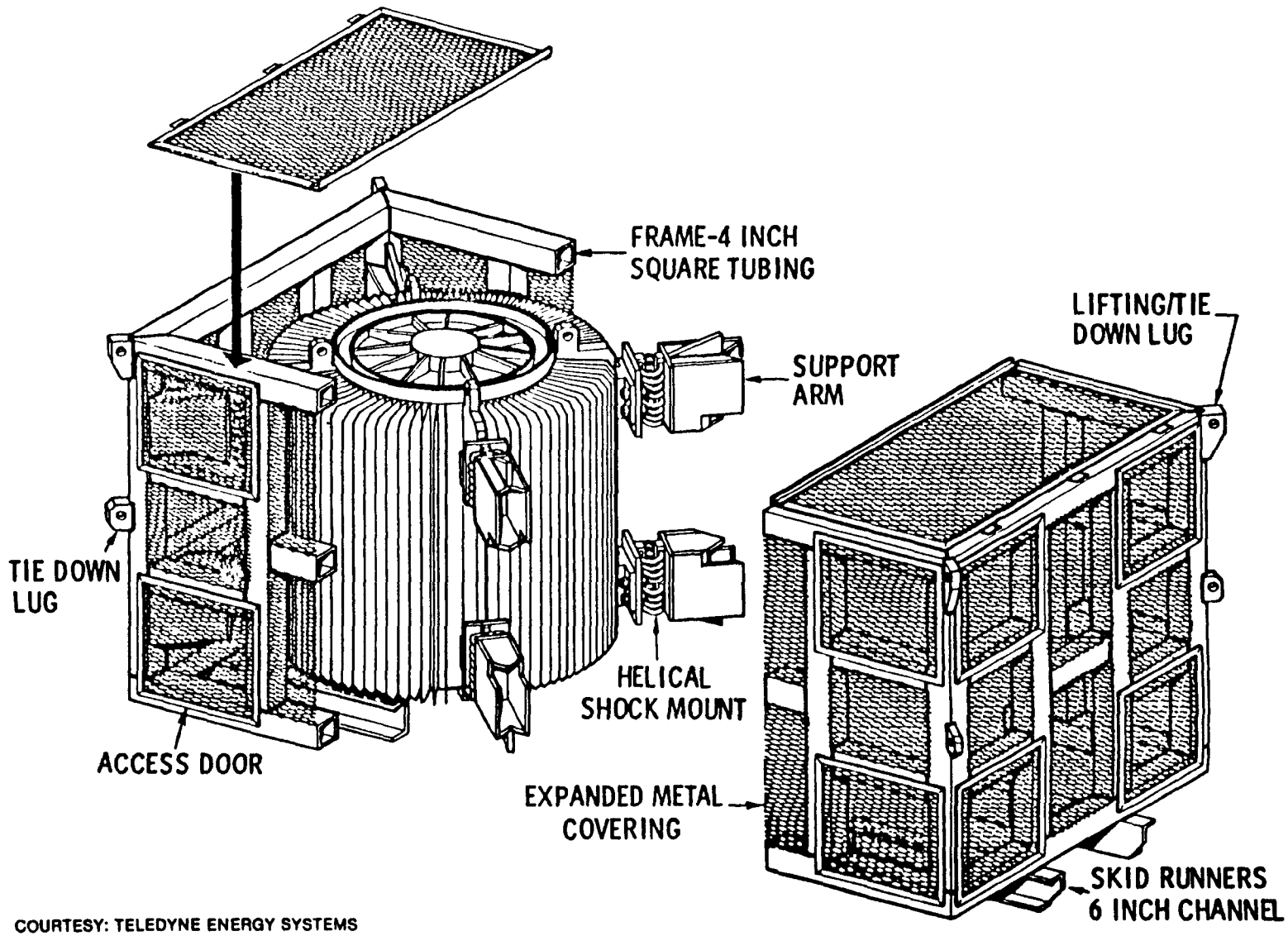

COURTESY: TELEDYNE ENERGY SYSTEMS

use in terrestrial power applications as well as in space missions. These types of conversion systems are quite efficient over a wide range of power levels and when combined with a nuclear heat source result in a lightweight, compact power system. Therefore, much of the development effort in the U.S. on dynamic power systems has been oriented toward space applications.

The first isotope and reactor heated space power systems, starting in the early 1950's, were based on Mercury Rankine turbogenerators with power outputs of 0.5 and 3 kwe, respectively. As spacecraft lifetimes increased, these systems were superceded by static thermoelectric power systems due to their longer expected lifetime. The question of the reliability or operating life of dynamic power conversion equipment has been its primary disadvantage in competition with static systems for many long-lived power system applications.

Over the years, dynamic conversion cycles which are much more efficient than the Mercury Rankine cycle have been explored. These include the Brayton, Organic Rankine and Stirling cycles. Brayton gas turbine equipment is widely used in aircraft engines and cabin air-conditioning equipment. NASA developed and demonstrated the closed-cycle mini-Brayton turbine-alternator-compressor power unit for space use. Small, low-temperature Organic Rankine turbogenerator power units were developed in Israel which could be used with solar or propane heaters. Propane-fired units of this type were selected for use along the Alaskan oil pipeline. The Army, Navy and Air Force have supported the development of high performance Organic Rankine turbogenerators for use in mobile terrestrial power units.

The British developed a terrestrial isotope power system which used a Stirling engine developed by a Dutch company. Several design studies were conducted by the AEC for isotope power systems using all three conversion cycles in order to evaluate and compare their performance characteristics.

In the mid-1970's, the Energy Research and Development Administration (ERDA) initiated ground demonstration unit development programs for 1 to 2 kwe Brayton and Organic Rankine space isotope power systems and a 1 kwe isotope heated Stirling power system for an underwater application. These programs produced electrically heated prototype units which were tested for a year or more to demonstrate their reliability. The DOE is currently planning to initiate a multi-kilowatt Dynamic Isotope Power System (DIPS) flight unit development program in support of military space missions. NASA has also recently selected a solar dynamic power system as part of a hybrid power system for its manned space station program.

Dynamic power system technology is also ready for use in long-lived terrestrial isotope applications requiring a kilowatt or so. Therefore, the DOE's Byproduct Utilization Program is re-evaluating Sr-90 fueled dynamic power systems and plans to demonstrate a 1 kwe Stirling generator being designed and fabricated by the Pacific Northwest Laboratory (PNL), Richland, WA.

In order to illustrate the benefits of a high-efficiency isotope power supply for a survivable C^3I/BM site which requires over 1 kwe of power, a conceptual design of a Sr-90 fueled dynamic isotope power system was developed under this study program. To simplify this task, the BUP-500

heat source/shield block design was used as a starting point. This 7,500 watt heat source was designed to meet all governing regulations for safe handling, transportation, and use and has been fabricated and recently fueled with Sr-90 fuel capsules using fuel from the Hanford WESF inventory.

The next step was the selection of the dynamic conversion cycle to use with the BUP-500 heat source. The Brayton and Stirling cycles use single phase inert gas working fluids which are ideal for the near-zero gravity of space. The Organic Rankine cycle depends on the two-phase boiling and condensing of an organic working fluid. Multi-phase working fluids are of some concern in space, but not in the gravity field here on earth. The organic working fluid permits lower parasitic fluid pumping losses and better heat transfer than the gaseous fluids. The Organic Rankine cycle offers an overall system efficiency with a higher percentage of the ideal Carnot cycle efficiency due to the low losses and its high degree of regeneration. This permits a very high system conversion efficiency at a relatively low peak cycle temperature, even at low power levels. The other cycles only yield comparable system efficiencies at much higher operating temperatures or much higher power outputs. Low cycle temperatures are important for a terrestrial power system because of the advantages of using lower cost, oxidation resistant (non-refractory) metals and bulk thermal insulation materials. Peak temperatures of the Organic Rankine cycle are limited by the pyrolytic (thermal) degradation effects on existing organic working fluids to levels which are below the hot junction temperatures of the telluride thermoelectric materials. Therefore, the BUP-500 heat source can be used in a high-efficiency Organic Rankine terrestrial power system.

Heat rejection temperatures, which are important for space radiator sizes and weights, especially for larger systems, are relatively insignificant in selecting a low-powered terrestrial cycle. Any of these cycles are suitable in this respect.

The reliability of the various high-performance dynamic conversion equipment still has not been demonstrated for very long operating lifetimes (5 years or more) for any of the cycles. However, there are differences in the equipment which bear on the reliability issue. The Organic Rankine and Brayton cycles involve combined rotating units (CRUs) with the turbine-alternator-pump/compressor on a common shaft within a hermetically sealed housing. The CRU is the only moving component. The working fluid serves as the lubricant for the bearings of the CRU and also the coolant for the bearings and the alternator. The organic fluid is a better lubricant and coolant than a gas. Conventional thrust and journal bearings can be used with the organic fluid, while relatively new, very close tolerance foil bearings are required to support the Brayton CRU. The Organic Rankine CRU is smaller and lighter than the Brayton CRU for the same power output, easing the loads on the bearings. This is significant in terrestrial applications where the power unit is subject to vibration and shock loads during handling, transportation and use while the power system is operating. The Stirling engine includes reciprocating pistons which are prevented from rubbing the cylinder wall by the gas working fluid. The reciprocating action can be converted to a rotating motion through a rhombic drive mechanism with an oil lubricant. The problems encountered with long-lived seals between the working gas and the oil sump led to the development of the free piston Stirling engine in which the

power piston is connected to a linear alternator, all within the same housing and operating on gas bearings. The reliability of this free piston Stirling engine/linear alternator combination is the least demonstrated of all the systems considered. The Organic Rankine CRU is easier to scale at low power levels and should be less expensive to produce within tolerances than either the Brayton CRU or the Stirling engine. The heat exchanger components for the organic system are smaller and offer more design flexibility than do the gas cycles. All systems require leak proof, pressurized fluid loops. The lower temperatures and lower temperature gradients of the organic fluid loop increase the options for a reliable fluid containment system.

As a result of the above considerations, the Organic Rankine power conversion system was selected for use with the BUP-500 heat source as the most efficient, most reliable, most rugged, and lowest cost system for terrestrial power applications. The organic working fluid used is toluene (CP-25), which was determined by the Army to be the optimum fluid for terrestrial power systems because of its high peak temperature capability (>800°F), very low freezing point (-140°F) and its optimum vapor pressure at low condenser temperatures (4 psia at 160°F). This vapor pressure is high enough to prevent pump cavitation without imposing a high back-pressure on the turbine.

A schematic diagram of the Terrestrial Organic Rankine Isotope Power System (TORIPS) is shown in Figure 7.3-1. The six thermoelectric converter assemblies of the BUP-500 RTG have been replaced with heat pipes and thermal insulation. The liquid metal (NaK) heat pipes collect the heat

Figure 7.3-1

TERRESTRIAL ORGANIC RANKINE ISOTOPE POWER SYSTEM

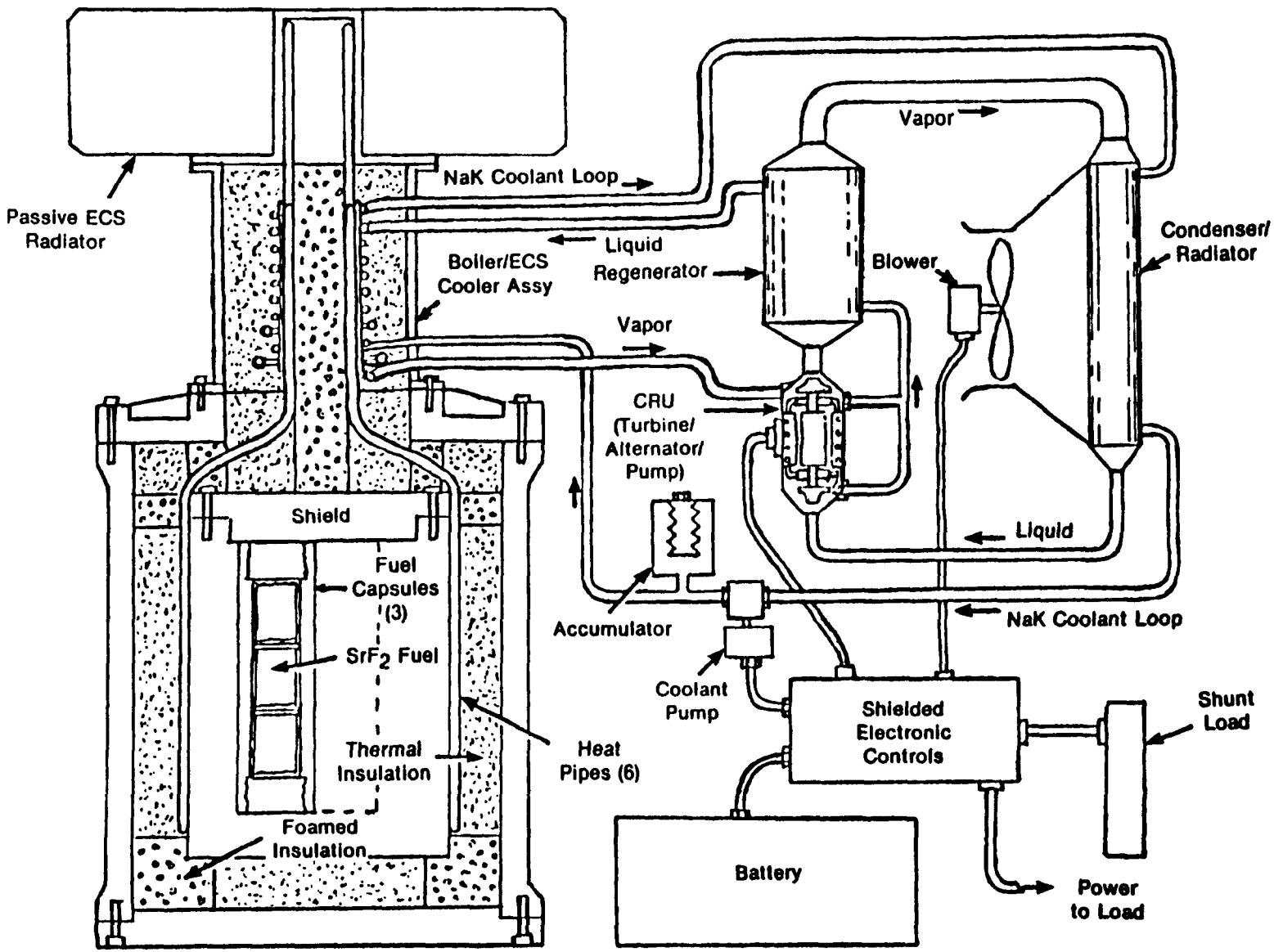

from the BUP-500 heat source (external to the biological shield) and conduct it to the TORIPS boiler above the heat source/shield assembly. The heat pipes act as reflux condensers and can be over-sized to carry the heat even in the unlikely event of a heat pipe failure. The spacing and length of the heat pipe condenser sections can be altered to match the heat transfer requirements of the boiler assembly.

The heat pipe assembly is designed to be installed after the shield has been loaded with Sr-90 fuel capsules. A new top cover is required to allow the heat pipe condenser sections to extend above it for mating with a heat removal system. A shielded facility is not required to assemble the heat removal system, but a finite time is available before the heat source/shield block reaches operating temperatures and a heat removal system must be in place to prevent over-heating of the fuel capsules. The large heat capacity of the heat source/shield block permits ample time for installing/exchanging heat removal systems. The 7,500 watt heat source has only about twice the heat output of a typical household steam iron and the heat source/shield block weighs about 5,100 pounds. Its temperature will not change rapidly, only about 125-150°F/HR under adiabatic conditions.

Once the heat pipes are in place, a finned heat removal cover or a pumped coolant loop heat exchanger can be bolted in place for temporary storage, shipment, etc. prior to the installation of the TORIPS conversion system. For example, the heat source and shield assembly can be loaded at the fueling facility just as in the case of the BUP-500 RTG. Then, with the temporary heat rejection system installed, the shielded heat source unit can be shipped to the TORIPS contractor's facility or to an

operational site for mating with the TORIPS power conversion unit. The heat source unit can be shipped in the BUP-500 shipping container or a similar, but larger, TORIPS shipping/installation container.

The Organic Rankine power conversion system includes a boiler, a turbine/generator/pump combined rotating unit (CRU), a regenerator and a condenser connected by the hermetically sealed Toluene working fluid loop. Detailed designs of these components were beyond the scope of this study; however, the components used in this conceptual design are based on existing designs of similar, state-of-the-art equipment.

The boiler assembly includes a single-pass, continuous tube, superalloy boiler coil wrapped around a heat collector plate which receives the heat from the heat pipe condenser sections. The length of the boiler tube depends on the fluid flow rate and the degree of super-heating used in the thermodynamic cycle. For a normal sub-critical fluid pressure, the boiler must include stand-offs between the collector plate and the boiler tube to accommodate the various heat transfer rates required for the liquid, boiling and vapor sections to prevent boiler burn-out. The use of a super-critical cycle, i.e. fluid pressures in the boiler exceeding 600 psia, eliminates the different fluid phases in the boiler and the need for different heat fluxes between the tube and the fluid. The length, diameter and spacing of the boiler coil can be matched to the heat pipes and fluid properties with this flexible design concept. The boiler assembly is heavily insulated to minimize thermal losses from the system.

The toluene working fluid exits the boiler as a super-heated vapor at approximately 800°F and 630 psia (super-critical) and flows to the turbine inlet nozzle. The single stage turbine has a rotor diameter of 2 to 2 1/2 inches allowing it to operate at a high rotating speed, on the order of 65,000 rpm, to produce a turbine efficiency of up to 80% of ideal isentropic expansion. The turbine produces the work to rotate the generator and pump which are mounted on the same shaft within the sealed CRU housing.

The vapor from the turbine outlet (~560°F, 5 psia) is ducted directly to the regenerator where it exchanges most of its remaining superheat to the high pressure liquid before it reenters the boiler. The vapor side of the regenerator operates at a pressure of about 4 psia while the liquid side operates at about 645 psia. The plate and fin heat exchanger design used in the regenerator results in a high effectiveness, 0.95 or better, with a low vapor side pressure drop (imposing less back-pressure on the turbine) and a compact size. The regenerator is also enclosed in thermal insulation to minimize heat losses from the working fluid loop.

From the regenerator, the toluene vapor enters the condenser where it is cooled to slightly below the saturated liquid point prior to entering the pump in the CRU. An average condenser temperature of 145°F provides the necessary temperature difference for cooling the condenser with ambient air while maintaining a toluene vapor pressure of 3 psia, a sufficient suction head on the pump to prevent unwanted cavitation.

The condenser/radiator in this conceptual TORIPS design is forced air-cooled by an electrical motor driven blower and uses a finned tube heat exchanger, similar to the radiator of an automobile. Other types of heat rejection systems can be used. Separate pumped coolant loops or heat pipes can remove the waste heat from the condenser and dump it through a much larger natural convection radiator to an air environment or to alternative heat sinks, such as the earth, depending on the application. The forced air condenser imposes a parasitic electrical load penalty on the system and perhaps introduces a reliability problem for long-lived applications; but it allows the TORIPS to be self-contained, useful in any air environment application, and operable during transportation and handling. A speed control feature on the electric motor driven blower can be used to maintain a constant condenser temperature (and constant cycle conditions) under variable ambient air temperatures.

The small, high-speed centrifugal pump increases the working fluid pressure to about 650 psia and circulates the working fluid through the system. It has an overall efficiency of only 60-65%, but is highly reliable. The low liquid flow rates and moderate pressure levels result in small pumping losses to the system.

The liquid toluene is pumped through the CRU where it cools and lubricates the bearings and cools the stator windings of the permanent magnet generator, reintroducing these thermal losses back into the cycle. The small, high-speed generator produces a high frequency AC electrical output which is the input to the shielded power control unit. The net electrical efficiency of such a generator is on the order of 95%. This

type of permanent magnet generator uses no brushes to wear out and all electrical windings are in the stator where they can be easily cooled. The small, light-weight, high-speed rotor of the CRU, mounted on conventional thrust and journal bearings which are lubricated and cooled by the toluene working fluid, provides a highly reliable integrated power conversion unit which should operate unattended and without maintenance for long operating lifetimes - 5 to 10 years or longer.

The working fluid flows from the CRU housing, through the liquid side of the regenerator and then back to the boiler to restart the cycle.

An emergency cooling system (ECS) is provided to dump the heat from the heat source prior to start-up of the TORIPS power conversion unit or in case there is a failure in the power conversion unit, such as loss of the working fluid. The ECS also serves as a power flattening system to accommodate the decay of the Sr-90 fuel over the operating life of the TORIPS. By adjusting the flow of the ECS coolant, excess thermal energy from the heat source (early in life) can by-pass the power conversion system to maintain constant cycle conditions and electrical power output at end-of-life (EOL) design values.

The ECS selected for this conceptual design is a separate pumped liquid metal (NaK) loop with a separate coil in the boiler assembly and an independent heat exchanger core in the condenser/radiator. The NaK pump is driven by an electric motor, powered by the storage battery, with a control system which can be operated manually or automatically by sensing loss of power from the generator or excess temperatures in the boiler assembly.

Parallel redundant Nak pumps would be used for increased reliability and maintenance during operation. The pumped loop ECS has a time limit associated with it based on the energy storage capacity of the battery to run the NaK pump and the blower. Maintenance personnel would have to provide additional power, replace the power conversion unit, or provide for adequate heat removal before the battery supply is exhausted.

Normally this type of conditional safety is not good enough and a more positive, fail-safe heat removal system is required. Therefore, a more passive and reliable ECS is used to back-up the separate pumped coolant loop. For this small system, a static finned radiator back-up heat rejection system can be activated by use of variable conductance heat pipes (VCHPs) whenever the heat removal through the working fluid boiler or Nak coolant loop is inadequate to maintain the heat source temperature below a pre-set level. The VCHPs can be in place of or in addition to the heat source heat pipes described above. The gas reservoir feature of VCHP can control the active condenser length of the heat pipe(s) to extend beyond the boiler to an ECS radiator to remove the heat not removed by the working fluid(s). This is a passive, self-controlled system requiring no external power. This type of ECS is only practical for systems where the radiator size is reasonable and the free air space is adequate to passively remove the heat output. However, the ECS radiator would operate at or near heat source temperatures and would be much smaller than a passive radiator designed to dump the waste heat from the system at the lower condenser temperature. Each application would have to assure that there is a fail-safe means for continually removing the heat to the surrounding environment.

The electrical control unit (ECU) is required to convert, regulate, and control the electrical output from the generator and match it to the load. The high frequency output from the generator is rectified by the ECU to charge the storage battery and to supply DC loads. The ECU maintains a constant load on the generator in order to control the speed of the CRU. When the various loads are insufficient to use the power generated, and the battery is fully charged, the ECU diverts the excess output to a shunt resistor load. For AC electrical loads, the ECU would include an inverter and/or transformer to deliver the proper voltage and frequency to the load(s). The ECU would also operate any system controls or status sensors to alert operating personnel of any power system malfunctions. The ECU and connecting cables are all shielded against electromagnetic fields. The battery is provided to handle peaked power loads and to provide reserve power for the ECS pump and blower. The battery capacity would be tailored to the application.

A sketch of the TORIPS as it would be packaged in its shipping/ installation container is shown in Figure 7.3-2. The container is made of a heavy tubular aluminum framework covered with expanded metal panels similar to the container for the BUP-500 RTG. The BUP-500 heat source/ shield/ housing (without fins) is mounted at one end of the container and supported through shock isolation mounts to the container frame. The power conversion loop, electrical control unit and the storage battery are installed, with proper supports, in the rest of the container. Thermal insulation blankets, mechanical support details, metal mesh panels, etc. are omitted from Figure 7.3-2 for a clearer depiction of the TORIPS components, their relative locations and sizes. The container is

Figure 7.3-2

SR-90 ORGANIC RANKINE POWER SYSTEM IN SHIPPING/INSTALLATION CONTAINER*

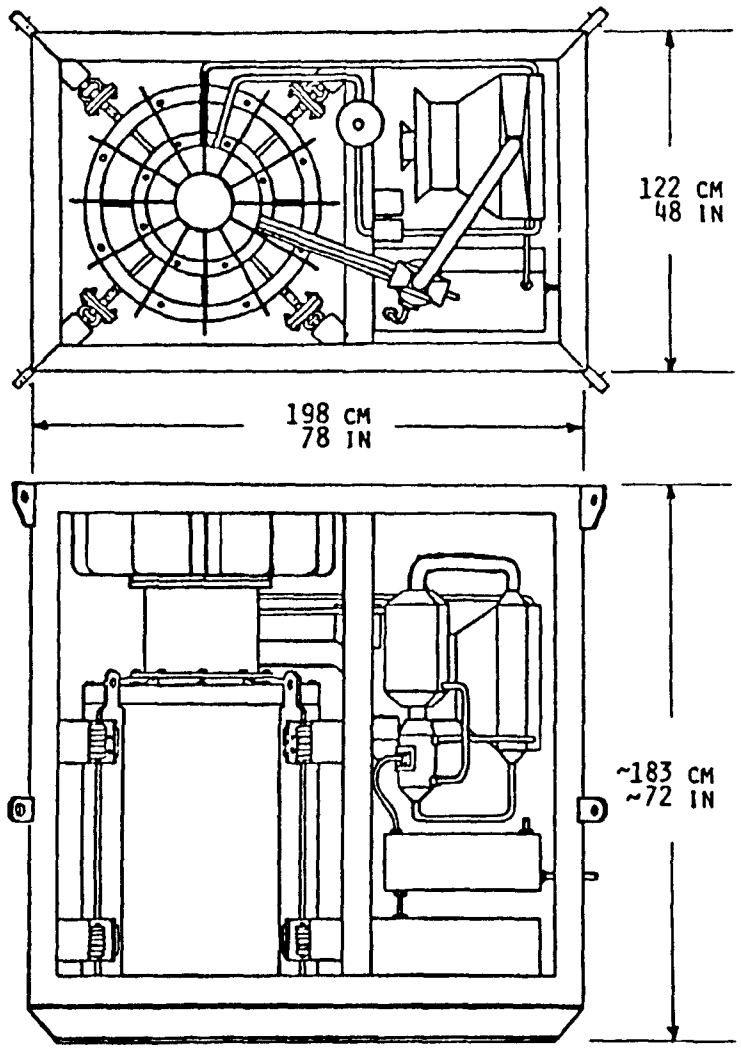

POWER LEVEL: 1.5 KWE
OPERATING LIFE: 5-10 YEARS
TOTAL WEIGHT: ~3,670 KG (8090 LB)
RADIATION LEVEL: <100 MR/HR

*INSULATION AND STRUCTURAL DETAILS OMITTED FOR CLARITY

skid-mounted and includes lifting/tiedown lugs for use during handling, shipping and installation.

The overall dimensions of the TORIPS are 1.98 m (6.5 ft) long by 1.22 m (4 ft) wide by about 1.83 m (6 ft) high (about the same volume as the BUP-500 RTG unit). The total estimated weight of the TORIPS is 3,628 kg (8,000 lb) including about 2,993 kg (6,600 lb) for the heat source/shield/housing assembly, 136 kg (300 lb) for batteries, and 363 kg (800 lb) for the shipping/installation container. The maximum radiation level at the external surface of the container would be the same as for the BUP-500 RTG, 35 mr/hr.

The electrical power output from the TORIPS generator depends on the heat input to the working fluid, the power conversion system efficiency, and the design life of the system. In this conceptual design it is assumed the BUP-500 Sr-90 heat source is used which has a 7,500 watt thermal output at BOL. This heat generation rate decays with the 28 year half-life of Sr-90 so that after 5 years the thermal output is only 88.4% BOL level or 6,627 watts. After 10 years, the heat generation rate will be 78.1% BOL level or 5,855 watts. The estimated heat loss from the well insulated heat source/boiler assembly is 375 watts, based on a 800°F temperature difference between the hot internal surfaces and the ambient air.

For a 10-year design life, the power conversion unit would be designed for a 5,480 watt input to the working fluid. (This is the EOL heat source output, less the constant thermal loss.) The power flattening

system would have to remove 1,645 watts at BOL, which would steadily decrease to zero at the 10-year point. After that, the temperatures would drop off and the CRU would drop below the speed control limits built into the system design. The super-critical toluene cycle used in this design with a 800°F turbine inlet temperature and a 145°F condenser temperature provides an ideal Carnot cycle efficiency of 52%. With the other high performance components in this TORIPS design, a turbine efficiency of 70% would permit an overall cycle efficieny of 27.3% (or 52.5% of Carnot). At this cycle efficiency, the TORIPS generator could produce 1,496 watts (electrical) for 10 years from the 7,500 w Sr-90 heat source.

For a 5-year design life, the power conversion unit would be designed to handle 6,252 watts input and generate 1,707 w(e) for 5 years. Much better use of the Sr-90 fuel is made with the 10-year design life; but in either case, the more efficient dynamic conversion system produces nearly three times as much electrical power from the BUP-500 heat source compared to the RTG.

8.0 Sr-90 FUEL AVAILABILITY

Nearly 500 different stable and radioactive isotopes are produced by fission, capture, and decay processes in large nuclear reactors, like the DOE's defense production reactors and commercial power reactors. When the fuel elements are removed from the reactors, they are held in cooling pools for the short-lived radioactive materials to decay. This reduces the radiation levels and heat output from the spent (irradiated) fuel elements. The spent fuel is either processed to recover the desired nuclear materials they contain, or held in storage for ultimate disposal at a government site, as is the current plan for spent fuel from commercial power reactors. The materials which are not recovered by processing are generally referred to as nuclear high level wastes (HLW) which continue to give off radiation and heat for a very long period of time.

These wastes contain many materials which could be recovered and beneficially used, reducing the liability of storing them as wastes. One of these fission waste byproducts is Strontium-90. It is one of the most abundant isotopes formed in the fission process. Sr-90, along with Cesium-137 (Cs-137), produces 98% of the thermal energy and 97% of the penetrating radiation in HLW thirty years after discharge from the reactor. These two byproducts dictate the design constraints for waste storage facilities. Their removal has the same effect as aging the wastes for hundreds of years.

Sr-90 is potentially available from currently stored defense wastes, from future processing of defense wastes, and from commercial spent

fuels. Commercial spent fuels represent a major source of byproduct Sr-90, if reprocessing of commercial fuels is restarted.

A generalized schematic flowsheet for the recovery of nuclear byproduct materials is shown in Figure 8.0.

8.1 Defense Wastes

Defense wastes are produced at the three DOE sites where fuels from defense reactors are processed, including Hanford, the Savannah River Plant (Aiken, SC), and the Idaho Chemical Processing Plant. All of the Sr-90 used in RTGs to date has been produced (i.e. separated from other wastes) at Hanford; and Hanford remains the only site in the U.S. equipped to recover the quantities of Sr-90 required for power applications. For early heat sources, Sr-90 carbonate was shipped from Hanford to the Oak Ridge National Laboratory (ORNL) where it was converted to the titanate fuel form and encapsulated in the heat source capsules. (For a brief period, this fuel conversion and encapsulation operation was also performed at the Martin Company's Quehanna, PA, hot cell facility under AEC license.)

As part of the waste management program at Hanford, the Waste Encapsulation and Storage Facility (WESF) was established to separate, encapsulate and store Sr-90 and Cs-137 apart from the residual wastes. Thus, in recent years, the Sr-90 for RTGs has come from the WESF inventory in the form of SrF_2. The WESF Sr-90 capsules were not designed for heat sources, so they have to be enclosed in an additional heat source strength member or the fuel must be removed from the WESF capsule and reencapsulated

Figure 8.0

BYPRODUCT RECOVERY SEQUENCE

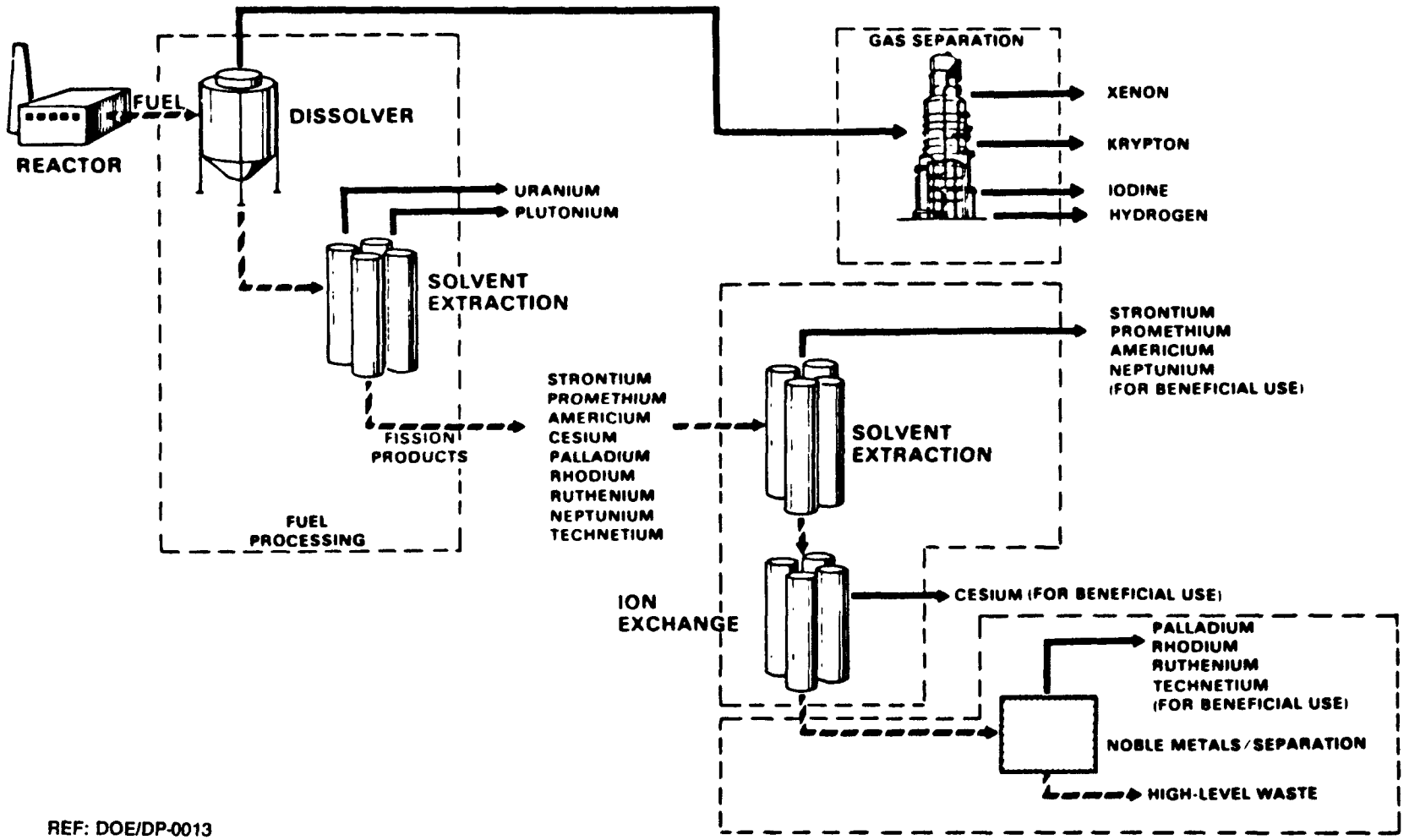

REF: DOE/DP-0013

in approved heat source capsules. This reencapsulation operation is currently performed at ORNL. However, should the future demand for Sr-90 heat sources justify it, WESF could be equipped to load the fuel directly in the heat source capsules so there would be no need to ship the fuel to ORNL.

The final fuel power density (i.e. how much heat will be produced from a given sized fuel capsule) depends on the age of the fuel, the impurity level, and the degree of compaction (bulk density) of the final fuel form. When discharged from the reactor, the Sr-90/total Sr isotopic ratio in the fuel is 55 to 62%. This ratio decreases as the time from reactor discharge increases, i.e. as the Sr-90 decays. The ratio is also decreased by any natural strontium introduced during processing. To be useful as a fuel for power units, the Sr-90/total Sr ratio should be at least 40% at the time of fuel loading. The SrF_2 from WESF also includes about 10% impurities which further reduce the fuel's power density. Existing WESF Sr-90 storage capsules vary in fuel loading and exhibit an average bulk density of only 65 to 75% of theoretical density. Using improved techniques, such as hot-pressing or melt casting, it would be possible to obtain bulk fuel densities of 95% theoretical density or better. Significant reduction in impurity levels would be a side benefit of the melt casting process. ORNL pulverizes and hot-presses the WESF fuel form prior to reencapsulating it for RTG heat sources.

Few of the WESF storage capsules contain Sr-90 which is suitable for use in power generators. In mid-1982, only 12% of the WESF capsules contained power-grade Sr-90 with a total inventory of 23.8 kwt, which has

since decayed to 21.5 kwt. A large fraction of this has been used in making heat sources for the BUP-500 RTG and the PNL Stirling demonstration power units. Another 237 kwt of Sr-90 has been encapsulated at WESF since 1982, but only about 24 kwt had a Sr-90 isotope concentration of 40% or better. There is another 429 kwt of Sr-90 in stored wastes at Hanford, but it is not considered recoverable from the insoluble sludge layer in the tanks.

In 1984, reprocessing of wastes at the Hanford PUREX plant was restarted. Sr-90 fuel of high quality can be recovered from this waste. Assuming a 95% recovery rate, it is estimated that the inventory of Sr-90 recoverable from these fresh PUREX wastes would be approximately 34 Megacuries or 225 kwt by the end of GFY 1990. Currently, there are no plans to separate the Sr-90 from the PUREX wastes. The Sr-90 will remain in the HLW sludge, which is to be solidified for disposal in a geologic repository, unless sufficient need is found to justify the recovery of the Sr-90. (This is not consistent with the heat removal before storage approach, but it probably has to do with costs and needs. Cs-137 will be removed; it is easier to remove the Cs-137 from the natant liquid layer and there is a backlog of requests for Cs-137 irradiation sources. Also, the DOE is still studying what to do with the defense wastes. A Sr-90 requirement could easily tip the scale in favor of its separation.)

HLW in storage at the Savannah River Plant (SRP) contains large quantities of Sr-90, but all of it is either in the insoluble sludge layer in the tanks, and therefore unrecoverable, or the isotopic content is too low for use in power sources, without isotope enrichment.

Future annual recovery rates of Sr-90 from fresh HLW at SRP are estimated to be about 6 Megacuries (or 40 kwt) per year with an Sr-90 isotopic content of about 60%. Assuming continued operation of the plant at current levels, the total Sr-90 inventory at SRP at the end of the year 2000 would be about 92 Megacuries or 620 kwt.

Currently, there are no facilities at SRP for recovering, purifying or encapsulating Sr-90. Such facilities could be constructed if the need for Sr-90 justifies the expanded capacity. Otherwise, SRP waste management plans call for immobilizing the Sr-90 along with the other HLW for ultimate disposal in a government geologic repository.

There are also no facilities for recovering byproducts from the defense wastes at the Idaho Chemical Processing Plant (ICPP), except for krypton and xenon gases. The amounts of byproducts that could be produced at ICPP are only about 10% of those from Hanford and SRP.

Options in the waste management program at Hanford and SRP are still under consideration. Studies have indicated that byproducts recovery options that include recovery of the transuranic (TRU) elements together with Sr-90 will have major beneficial impacts on waste management. However, byproduct recovery options which do not include recovery of the TRU elements will have small impacts on waste management. Further studies are planned, so there is still time to consider high priority needs for Sr-90 in the overall defense waste management plans.

In summary, the facilities available for recovering, purifying, and encapsulating Sr-90 are limited. Past emphasis has been on the safe, cost-effective management of Sr-90 wastes, not on production of optimized heat sources. In the future, changing the emphasis to heat source uses of the Sr-90 could insure high-quality sources by minimizing the addition of natural strontium during processing, installing the melt casting/purification process, and loading the fuel directly into heat source capsules.

Military needs for Sr-90 power units could lead to continued recovery of Sr-90 at Hanford and, if necessary, installation of Sr-90 recovery facilities at SRP. The smaller quantity of Sr-90 available from ICPP might not justify installation of recovery facilities there, unless dictated by waste management considerations.

There is a limited quantity of high-grade Sr-90 already encapsulated at WESF which can be used for prototype power unit demonstrations while modifications and new facilities are being installed at Hanford and SRP, respectively. Hanford could produce about 20 kwt of Sr-90 per year and SRP could produce about 40 kwt per year. Over 850 kwt of Sr-90 will be produced in defense production reactors by the year 2000, assuming they continue in operation until then. This is enough fuel for about 80 25-watt RTGs/year and over 1,000 such RTGs by the year 2000. However, this would only support about one tenth as many BUP-500 RTGs or 1-2 kwe Dynamic Isotope Power Systems.

Should the future military requirements for nuclear weapon materials change so that the defense production reactors would be shut down, one or more of these reactors could still be operated to produce isotope heat source fuels--primarily Pu-238 for space applications and perhaps other military uses. Operation of the reactor(s) to irradiate Neptunium-237 targets to produce Pu-238 will generate fission products from which Sr-90 could continue to be recovered.

8.2 Commercial Power Wastes

Spent fuel elements from commercial power reactors represent a major source of Sr-90, if reprocessing of commercial reactor fuels is restarted. As of 1985, there were 80 power reactors in operation in the U.S. with a capacity of 94,000 megawatts of electrical power. This number is projected to grow slowly as new reactors come on line and older ones are decommissioned. By the year 2020, some 120 plants might be in operation in the U.S. The spent fuel from these reactors represents a formidable waste management problem to the utility industry and to the nation as a whole. This spent fuel will contain about 5,000 kwt of Sr-90 by the year 2000.

In the original planning and design of commercial power reactors, it was expected that the used fuel elements would be reprocessed and the unburned fuel would be recycled. Indeed, with breeder reactors the fuel must be recycled to take advantage of the fissionable material formed during their operation. Most sites were designed to accomodate about two reactor fuel loadings in their cooling pools. It was presumed that the fuel would be cooled for a few months on-site and shipped to a reprocessing

plant. There the fissionable material would be separated and recycled for new fuel element fabrication and the HLW, including the fission products, would be solidified for shipment to a national repository for ultimate disposal.

Small fuel reprocessing facilities were built by the industry in New York and Illinois, followed by the full-scale Barnwell Nuclear Fuels Plant, Barnwell, SC, which was privately constructed by Allied/Gulf Nuclear Services. In 1977, the Administration issued a ban on private reprocessing in the U.S. in the hope that such action would encourage other nations to follow suit, thus reducing the chance of nuclear weapons proliferation. Reprocessing of defense fuels by the Government continued in this country as did reprocessing in other countries, including France, England, Germany, and Japan. The present Administration lifted the restriction in 1981, but the industry has not seen fit to resume private reprocessing efforts. Perhaps this reluctance is due to the present marginal economic benefits in fuel recycling while fresh fuel supplies are abundant and the uncertainty in future Administration policies in this area.

Meanwhile, the spent nuclear fuel is continuing to accumulate at the reactor sites. The Nuclear Waste Policy Act of 1982 requires the Government to provide a waste disposal site and to take possession of spent commercial fuel starting in 1998. In the interim, the pools at reactor sites are totally inadequate and several approaches are being studied to alleviate the situation so that the reactors can remain in operation. One approach involves shipment of the spent fuel to government facilities for interim storage. Perhaps the fuel could also be shipped to Hanford or SRP

for reprocessing and recovery of the byproducts, including Sr-90. There are also some options involving the Government's operation of the Barnwell plant, which is adjacent to the Savannah River site.

Assuming that beneficial uses of nuclear byproducts and/or waste management considerations support the reprocessing of commercial spent fuel and the recovery of Sr-90 from the HLW, then the estimated availability of high-quality Sr-90 through the year 2000 is shown in Figure 8.2. If commercial fuels could be reprocessed starting in 1990, they would greatly increase the availability of Sr-90 after that time.

Should the defense production reactors be shut down, recovery of heat sources, both Sr-90 and Pu-238, from commercial HLW certainly appears to be an economical option for continued availability of these materials compared to operating a defense reactor(s) to deliberately produce heat source fuels and generating more wastes.

Figure 8.2

CUMULATIVE INVENTORY OF HEAT SOURCE GRADE STRONTIUM-90 ($^{90}SR/SR \geqslant 40\%$) AVAILABLE FOR RECOVERY FROM HIGH-LEVEL WASTES

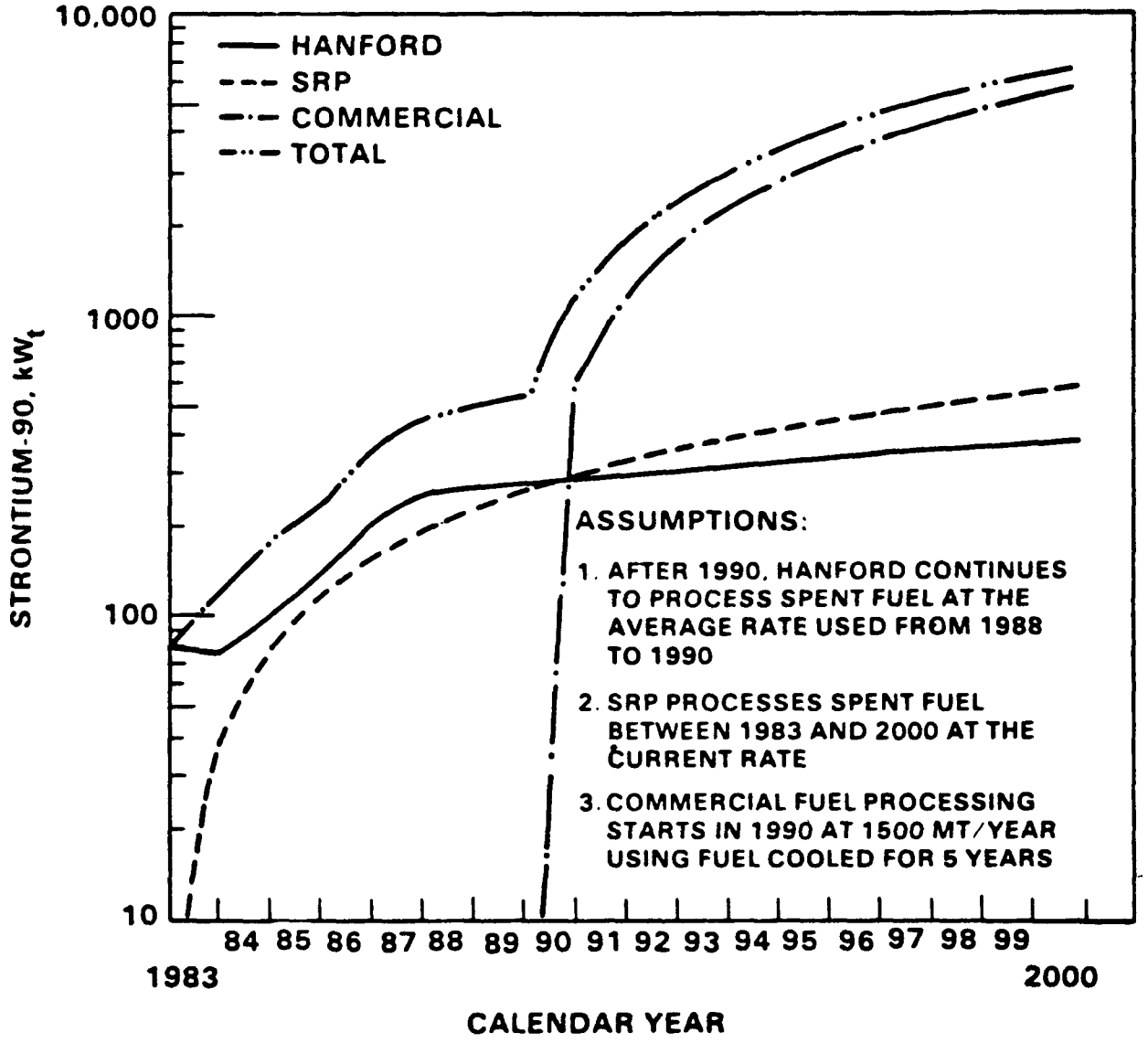

REF: DOE/DP-0013

9.0 Sr-90 POWER SYSTEM COSTS

The costs of Sr-90 RTGs have always been a problem in promoting their use, especially in non-government or commercial applications. The number of units involved have been small and sporadic, so there has never been what one would call a production run of Sr-90 RTGs. The small Teledyne Sentinel RTGs come in standard sizes which can be firmly priced on a case-by-case basis, at least for the non-fuel costs. The fuel has to be produced, processed, and loaded in government laboratories, which were designed for other purposes, on a campaign basis whenever a heat source is required.

In 1972, the AEC announced in the Federal Register that it would sell Sr-90 sources from WESF at the price of 10 cents/curie. At 148 curies/thermal watt, that means the SrF_2 would cost $14.80/thermal watt. The WESF capsules contained up to 1,000 watts of SrF_2. For a 10 year, 25-watt RTG containing 720 watts of SrF_2, the basic fuel cost from WESF would be at least $10,656, neglecting losses and differences in the WESF capsule loading and the amount required.

To ship the WESF capsule(s) to ORNL and to remove the SrF_2, pulverize it, hot-press it into pellets, load it into the fuel capsule(s), and load the fuel capsule(s) into the RTG or a shipping cask at ORNL, a substantial service charge is required. Each time the fueling facility must set aside high level hot cells for the fuel processing and loading operation and then these cells must be decontaminated. For quality control purposes, the fuel capsule welding techniques must be mocked-up, rehearsed,

sample before and after closures made, and then destructively examined. Applied to a single RTG, these costs result in a major part of the generator price. For example, a recent quote from ORNL to fuel a 60-watt RTG was $145,000, almost one third of the total generator cost of $450,000. A 25-watt Sentinel generator currently costs about $300,000. Teledyne estimates the BUP-500 RTG will cost $650,000 - 700,000.

These commercial prices indicate that the Sr-90 fuel cost is relatively small compared to the one-at-a-time fueling and generator costs. However, the unit cost per watt decreases substantially for the larger RTGs. At $300,000 for 25 watts over 10 years, the cost of the electricity is nearly $137/kwh--not very competitive with other terrestrial power sources unless operating costs, maintenance, logistics, unique requirements, etc., are considered.

If the requirements for Sr-90 power units increased to where a production-type operation could be implemented at a single laboratory, e.g. WESF, and the contractor could produce a quantity of generators, then the Sr-90 power unit costs could be reduced substantially from those cited above. However, nuclear quality and safety controls and hot cell operations will never permit RTG costs to be as low as diesel generator sets, for example. Considerations other than initial costs must be included in selecting nuclear power units for terrestrial uses.

The DOE has a policy to promote the use of byproduct strontium and will support user agencies during the development and demonstration phases of a new application, especially for a critical military or national

strategic need. Unfortunately, until the use, quantities, schedules, etc. are defined and an interagency committment is made, actual costs for such government programs cannot be determined.

10.0 MODEL APPLICATIONS OF HARDENED ISOTOPE POWERED C^3I/BM SITES

Two model applications were selected to illustrate how isotope power systems can be used to enhance the survivability of C^3I/BM ground segments critical to the SDI program. Conceptual designs of these hardened installations are discussed in this section of the report.

Since the supply of suitable isotope fuels is not unlimited, their use can only be considered in C^3I/BM systems with total power requirements which are consistent with this limitation. These can be systems with a large number of sites requiring a small amount of power per site or systems with a few sites requiring much more power per site. However, very large installations or systems with many high power consuming facilities must be powered by some other means than by isotope power units. Aside from the fuels availability considerations, the technology for isotope power systems has been demonstrated only at power levels of a few kilowatts per system, or less.

The outstanding reliability exhibited by long-lived isotope power systems in remote, unattended sites, even under extreme environmental conditions, suggests their use in remote telecommunications relay or repeater sites between larger, manned installations. Because of their inherent hardness and independence of external power or fuel supplies, isotope power systems appear to be well suited for use at C^3I/BM sites on the perimeter of prime target areas where post-attack access by personnel might be prevented for some time due to high contamination levels.

Since isotope power systems permit a facility to be totally independent of the utility power grid, their use should be considered for those critical ground segments which must continue to operate during and after a severe EMP attack. For maximum benefit from the isotope power systems, they should be used in systems with a balanced survivability, i.e. the systems should not include weak links which are vulnerable to the expected threats whether isotopic power is used or not. For example, isotope powered repeaters in an above ground wire telecommunications cable system merely eliminates power grid problems; the cable-system is still vulnerable to blast and EMP threats.

Large, manned installations usually require large power systems, well beyond isotope power levels. Although isotope power sources might be useful for selected loads requiring extremely "clean" power, e.g. computers, or highly reliable power, e.g. safety or security systems, they would not be used to power the entire installation. Personnel are available in such an installation to keep on-site power supplies in operation or to quickly reestablish power in the event of a failure. Supplying fuel for an on-site power system should present no particular problems for a manned facility requiring life support systems for the operating personnel. Adequate protection of the power system can be provided by facilities designed to protect operating personnel.

Due to the costs and limited availability (at least in the near-term future) of isotope power systems, they are probably better suited for use in newly installed or upgraded government-owned C^3I/BM systems than in retrofitting existing commercial telecommunications systems.

The two types of hardened installations selected to illustrate the use of isotope power systems are: (1) a fiber optic telecommunications cable repeater site powered by an RTG, and (2) a satellite ground terminal associated with a major missile defense control center powered by a dynamic isotope power system. One of these two types of ground installations is critical to any ground segment of the SDI C^3I/BM system.

10.1 Hardened Fiber Optic Telecommunications Repeater Station

Highly survivable telecommunications cable systems will be required between various command posts, control centers and other dispersed ground installations in the SDI C^3I/BM system. It is assumed that the Government will install new, hardened, secure and dedicated defense cable systems to satisfy this requirement as part of its National Communication System up-grading program, rather than depend entirely on the aging commercially-owned systems. Presumably these new cable systems will exploit the benefits and advantages of the rapidly developing digital fiber optic telecommunications systems technology. Fiber optic cables have greater capacities, lower repeater power requirements, greater distances between repeaters, and lower installation costs. With RTG power supplies independent of the power grid, fiber optic cables provide the most survivable links between hardened manned ground installations for a C^3I/BM system with a balanced survivability of the highest degree possible.

Fiber optic telecommunications cables are now available which can permit extremely low bit error rates with repeater spacings up to 100 km (62 miles) or more. This means a fiber optic cable between Colorado

Springs, CO and Washington, DC, a distance of 2,000 miles, only requires about 30 repeater stations. One hundred small Sr-90 RTGs could provide enough power for over 6,000 miles of fiber optic telecommunications cables between SDI C^3I/BM installations. 6,000 miles of coax cables would require 3,000 or more repeater sites, 30 times as many; while a microwave relay system over a similar distance would require about 400 relay stations of much higher power levels. The costs of installing either coax cable or microwave systems are much higher than for fiber optic cable systems, whether they are hardened or not.

10.1.1 Siting

The fiber optic telecommunications cables can be routed to avoid prime target areas and to take advantage of protection provided by the natural terrain. The large distance between repeaters provides flexibility in locating the repeater sites away from flood plains, population centers, etc. The lower costs associated with the fiber optic cables permits routing the cables to maximize use of Government controlled land and to build redundancy into the system by alternative routing.

A conceptual design of an unmanned, low-powered fiber optic telecommunications repeater site powered by a Sr-90 RTG is shown in Figure 10.1.1. This underground installation is hardened to withstand nuclear blast overpressures up to 100 psi, direct nuclear radiation levels associated with these overpressures, and nuclear EMP threats of 50,000 volts/meter, or more. There are no conductive paths penetrating the reinforced concrete enclosure, only the dielectric fiber optic cables.

Figure 10.1.1

HARDENED RTG-POWERED FIBER OPTIC CABLE REPEATER STATION

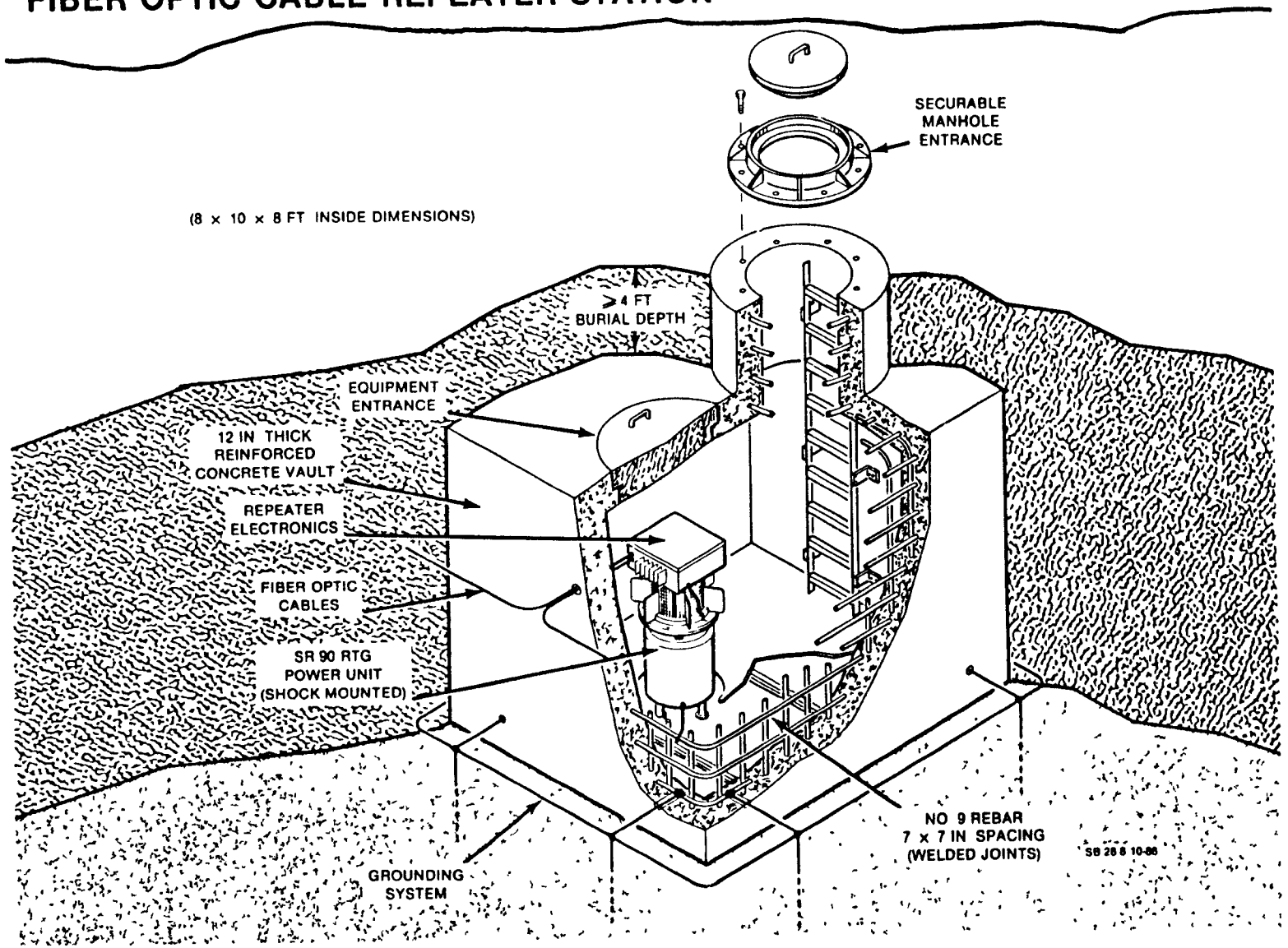

This hardness level assures survivability of the site so long as it is outside the region disturbed by the cratering effect of a nearby nuclear weapon burst. This equates to a distance of about 1.1 km (3,500 ft) from a 1 MT weapon exploded above, on or beneath the surface, and correspondingly smaller distances from weapon bursts of smaller yields.

For those sites which are not on government reservations or otherwise protected from public access, an exclusion fence can be placed around the site to discourage entry by unauthorized personnel. However, such an enclosure will only deter, and not prevent, the entry of determined trespassers and might aid in locating and identifying the significance of the underground communications facility more than protecting it. An exclusion fence is not required to protect the general public, or wildlife, from the low radiation levels given off by the isotope power unit.

10.1.2 Equipment Vault

A reinforced concrete structure or equipment vault (shown in Figure 10.1.1) provides the underground operating space for the communications equipment and the Sr-90 RTG power supply and constitutes the entire hardened fiber optic cable repeater station. The vault is buried under 4 feet (or more) of earth with access provided through a manhole column to the surface (as shown). The manhole is large enough for personnel, tools, the electronic equipment, etc., but not large enough to install or remove the RTG. The manhole cover should be securable from the outside to prevent unauthorized access and can be equipped with an intrusion alarm tied into the signal cable alarm system. A separate equipment entrance plug is

provided directly over the RTG so the heavy generator can be installed and removed by an overhead hoist without requiring further movement of the RTG within the vault. The equipment plug is covered with soil because it would only be used infrequently. It should be securable from the inside.

The interior dimensions of the equipment vault are: 10 ft x 8 ft x 8 ft high. This provides space to work around the equipment, sufficient heat removal area, and EMP shielding separation distance between the vault walls and the internal equipment. The vault is air-tight and sealed against ground water seepage into it. The only penetration of the vault below grade, besides the equipment plug, is the conduit port for the incoming and outgoing fiber optic cables.

The walls of the equipment vault are made of concrete, poured in place, and reinforced by steel rebar. To withstand a 100 psi overpressure (with a dynamic safety factor of 2), the concrete walls are 12 inches thick and are reinforced with No. 9 rebar on a 7 inch by 7 inch spacing, and a 3 1/2 inch spacing at the edges. The reinforcing bars are welded at all joints to form an EMP shield (Faraday Cage) for the interior of the vault.

The rebar shield is grounded through several heavy gage cables to an exterior ground loop welded to a number of ground rods (8 to 10 ft long) driven into the earth around the structure. The shielded equipment plug and metal manhole cover are also grounded to the rebar shield when in place. The access ladder, if metallic, would also be grounded to the rebar shield. A dielectric conduit is used to pass the signal cables through the vault wall.

Electromagnetic shielding practice dictates that internal equipment (or electrical conductors) be separated from the shield by at least five times the size of any aperture in the shield. Therefore, a 3-foot minimum separation is provided between the internal equipment and the walls and ceiling of the vault.

The 4 feet (or more) of earth cover and the 12 inches of concrete (with steel rebar) provide adequate shielding against the thermal radiation and direct neutron and gamma radiation from nuclear weapon bursts with an energy yield and a distance commensurate with the 100 psi overpressure (e.g. about 3,500 feet from a 1 MT air burst). The fast neutron flux would be decreased by about 10^4 (3×10^{14} n/cm^2 to $< 10^{11}$ n/cm^2) and the total neutron dose would be < 400 rad. The fission and secondary gamma dose would be reduced similarly to less than 100 rad. This amount of shielding is not adequate to protect personnel, but provides radiation levels well below threshold damage levels for radiation resistant electronic equipment.

The radiation levels imposed on the electronic equipment from the Sr-90 RTG are much lower than those caused by a nearby nuclear weapon burst, but they continue over the life of the equipment. At 1 meter or more from the center of the RTG, the gamma radiation level is less than 10 mr/hr. Over 5 years operating life, the accumulative dose to the equipment is less than 438 rads.

These radiation levels will not cause darkening of radiation resistant fiber optic cables. Although spurious photemission signals might be expected in the cable or optoelectronic equipment for the brief duration

of the radiation pulse, no permanent damage to the communications system would be experienced.

10.1.3 Repeater Station Equipment

The fiber optic telecommunications cable repeater equipment consists of an electronic repeater unit integrated with the Sr-90 RTG power supply (see Figure 10.1.3-1). The Sr-90 RTG is a standard Sentinel 25E generator with a modified heat rejection system to provide additional cooling fin area extending beyond the diameter of the generator housing. These extended cooling fins are necessary to improve the convective heat transfer to the air in the confined space of the air-tight vault. The number and length of the fins can be tailored to the application. The heat removal fins are simply bolted to the top of the generator in place of the removable fins of the standard design.

A stiffened metal mesh/frame support structure is provided between the generator and the electronics unit. This mounting arrangement provides a close coupling between the power unit and the load equipment, minimizing the length of the power cable between them; provides for better thermal control of the electronics in cold weather applications; and incorporates all of the equipment in a single massive unit for installation on the shock-isolation mounts to the floor of the vault. The open mesh support structure allows free air flow between the cooling fins and provides another layer of EMP shielding around the connecting power cable. The power cable itself is a shielded-type two-wire DC cable. All components

Figure 10.1.3-1

RTG POWERED FIBER OPTIC TELECOMMUNICATIONS CABLE REPEATER

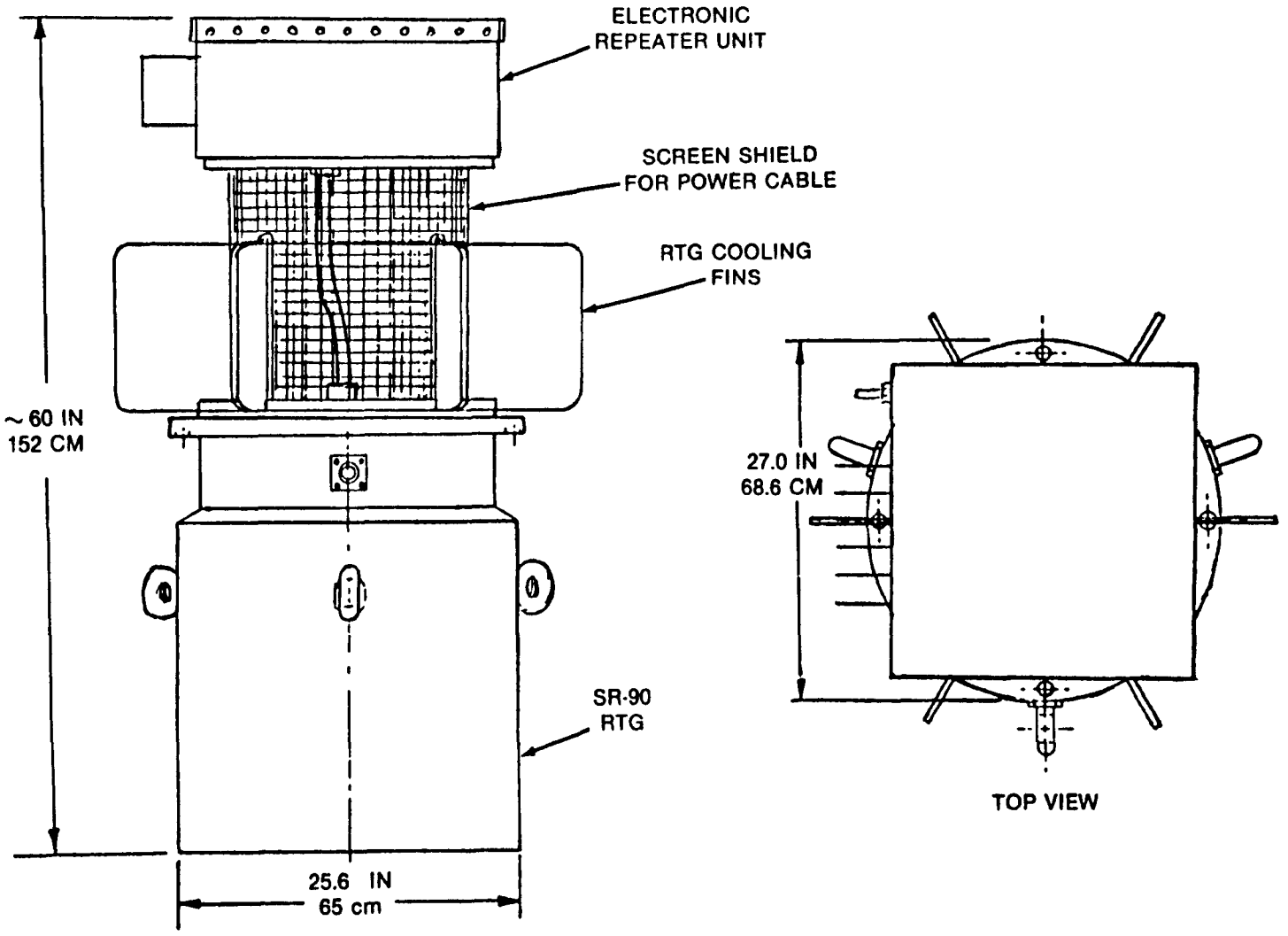

are well grounded to each other, and the generator is equipped with a ground cable tied into the rebar shield of the vault.

The electronic repeater unit is shown in Figure 10.1.3-2. It includes a sealed (water-tight) metal enclosure or housing with a removable lid for access to the internal components. The water-tight feature provides a dry operating environment for the internal components even if the vault should become wet during rainy weather. The housing forms a second free-field EM shield against EMP threats.

The internal components include a power converter/regulator unit, an alarm/status system, and at least six optoelectronic repeaters. The converter/regulator receives the low voltage (about 3.5 v) DC power from the Sr-90 RTG and steps it up to the voltages required by the electronic load (± 5 v, +15 v). It also keeps a constant load on the RTG for maximum power transfer. The excess power during the early life of the generator is shunted to a resistive load and dumped as heat through the finned part of the electronics unit enclosure. The alarm/status unit is to monitor and transmit data on the operational status of the repeater station over the fiber optic cables to manned installations on the network.

A minimum of six repeaters is required to provide for one active fiber, one standby fiber, and one alarm/status fiber in each direction. This provides a broad band, high data rate communications system equivalent to over 6,000 simultaneous telephone conversations. The capacity could be doubled by adding one active fiber each way. Each repeater receives the light pulses from the incoming fiber, transforms them into electrical

Figure 10.1.3-2

ELECTRONIC REPEATER UNIT FOR FIBER OPTIC TELECOMMUNICATIONS CABLE

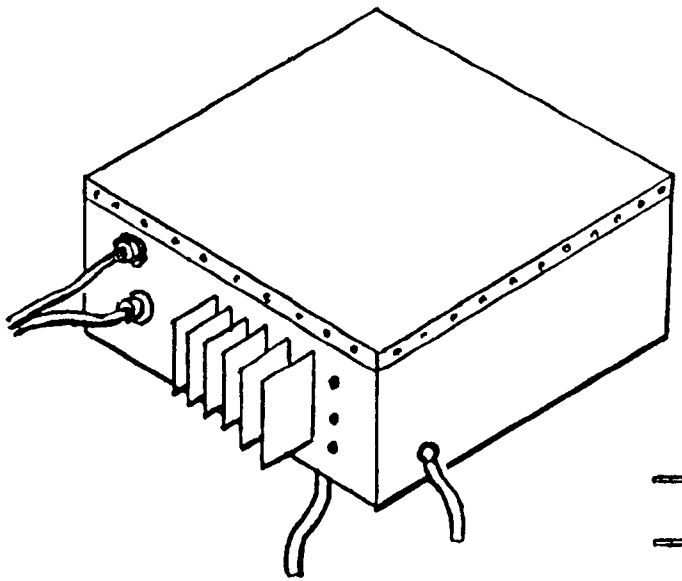

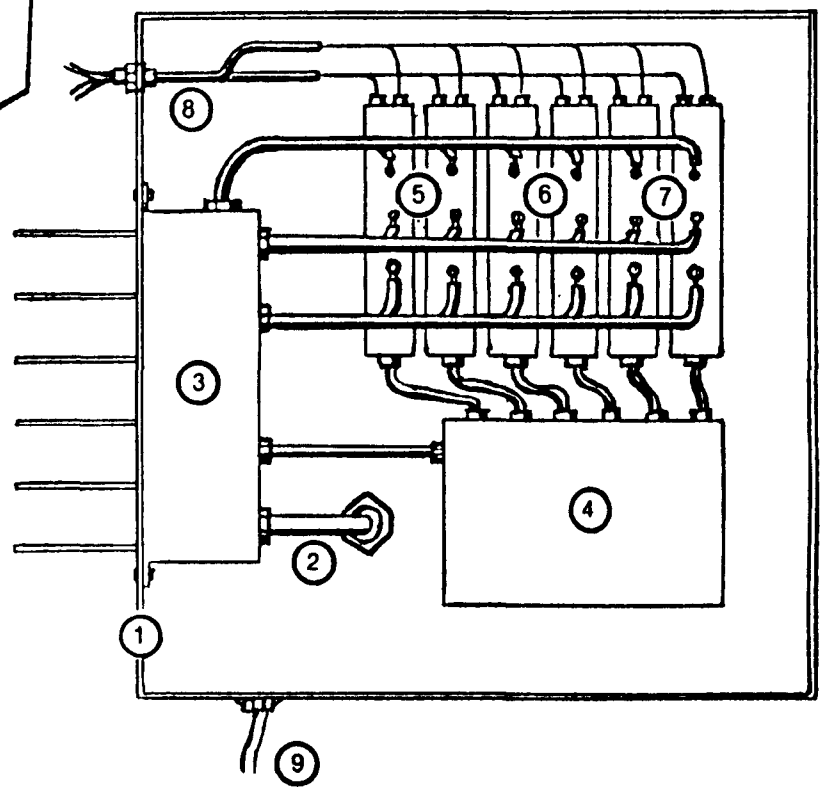

1. SEALED, SHIELDED ENCLOSURE
2. POWER CABLE FROM RTG
3. POWER CONVERTER/REGULATOR
4. ALARM/STATUS SYSTEM
5. ACTIVE 2-WAY REPEATERS
6. BACK-UP 2-WAY REPEATERS
7. ALARM/STATUS REPEATERS
8. TWO SIX-FIBER OPTIC CABLES
9. GROUNDING CABLE

pulses, regenerates them to their original form and retransmits them as light pulses over the outgoing fiber. A fiber optic repeater requires about 3.0 to 3.5 watts of DC power, so the 6-fiber repeater station requires an average power of less than 20 watts DC. An 8-fiber station would require about 25 watts DC. Therefore, a standard 25-watt Sr-90 RTG can supply power for an 8-fiber cable repeater station for 10 years or a 6-fiber cable repeater station for about 15 years.

Each component within the electronics unit is contained within its own housing to provide a third level of EM shielding for the individual electronic/optoelectronic parts and circuits within these components. All connecting electrical cables are also shielded and loops in the cables/wires are avoided. The lead-throughs for the fiber optic cables are designed to prevent EM leakage to electrical components. All housings are well grounded into the common earth ground system.

No external power or signal conductors lead into the vault to carry voltage or current pulses into the electronics. Therefore, no terminal protection devices are required. The triply shielded power cable and electronics unit should be amply protected against a nominal 50 kilovolt/meter (or 1 Joule/m^2) HEMP field and even higher fields such as those associated with nearby nuclear bursts.

10.1.4 Thermal Considerations

A thermal analysis of the repeater station was performed to determine that the waste heat from the generator and the electronics unit

could be rejected through the vault walls to the surrounding soil without overheating the generator's thermoelectrics or the electrical components. The thermal load from the Sr-90 heat source at BOL is 720 watts. From this, 40 watts of electricity is generated and passed to the electronics unit where it is distributed between the communications electronics and the shunt load resistor. Essentially all of the electricity is converted back into heat in the electronics unit. (There is very little power in the light signals transmitted over the cables.)

The heat must be removed from the surfaces of the generator, cooling fins and the electronics unit housing by natural convection of the air within the vault. The air must dump its heat to the walls of the vault and recirculate past the equipment. It was assumed that an air gap forms between the outer wall of the vault and the surrounding soil. (This is a worst case condition since any such gap could be filled with water during rainy weather.)

Under these conditions, it was found that a 25°C (45°F) temperature difference between the air in the vault and the exterior soil temperature is required to reject 720 watts through the walls. (Uniform air/soil temperatures and air gap resistance were assumed around a rectangular vault. No credit was taken for the losses through the manhole column or the metal manhole cover.) With soil temperatures of 0-20°C (32-68°F), the internal air temperature would be in the range of 25-45°C (45-81°F), or nearly normal room air temperatures. The RTG and electronics heat rejection surfaces would run somewhat warmer, but well within their normal operating temperature capabilities.

A more detailed thermal analysis would take into account the thermal gradients in the various media (especially the surrounding soil). Under some very hot and dry climatic conditions, it might be necessary to provide some auxiliary (but passive) cooling paths between the air in the vault and the ambient atmosphere above the surface. (This will be addressed further under the application of a larger power source in the following section.)

10.2 Hardened Remote Satellite Ground Terminal

Highly survivable satellite ground terminals will be required for the satellite-to-ground and ground-to-satellite data transfer and control links of an SDI C^3I/BM system. The manned data processing/control centers associated with an SDI C^3I/BM system can be hardened by deeply burying them underground and providing them with independent power sources, similar to the NORAD Cheyenne Mountain Complex. Widely dispersed back-up or alternate manned installations can be provided to achieve redundancy in the system. The use of buried fiber optic telecommunications cables to connect those manned sites with each other and other ground installations can also contribute to the survivability of the system since these cables will not pick up EMP energy pulses and conduct them into the hardened facilities.

However, for these installations to communicate with satellites or airborne platforms at UHF or higher frequencies, their antennas must be exposed above ground, within line of sight of these space or airborne platforms. Normally, the antennas are located as close as possible to their associated transmitter/receiver electronics to minimize signal losses

in the connecting waveguides. The antenna, with its tracking and control mechanisms, the transmitter/receiver electronics, and the signal conversion/interface equipment make up what is generally called the ground terminal. Electrical power is required at the ground terminal to amplify the communications signals received from or delivered to the connecting ground network, to operate the antenna, and to provide environmental control for the equipment, as necessary. This electrical power is usually obtained directly from the utility power grid or through power cables from nearby manned facilities.

In the case of a hardened, underground installation, its ground terminal(s) should be located far enough away to prevent it (them) from being damaged by weapons targeted on the main installation. Separation of the facilities can also prevent the signal emissions from the antenna(s) from being used by homing devices against the main facility. Redundant ground terminals can also increase the survivability of the overall system. The use of fiber optic signal/control cables between the underground data processing/control center and its unmanned, remote ground terminal(s) provides great flexibility in separating and protecting the hardened facilities (as shown in Figure 10.2).

To further enhance the survivability of the overall ground segment, the remote ground terminal(s) should be independently powered, free of power lines from the utility grid or from the underground center. A good choice for the independent power source is a long-lived isotope power system.

Figure 10.2

HARDENED SATELLITE-TO-GROUND SEGMENT

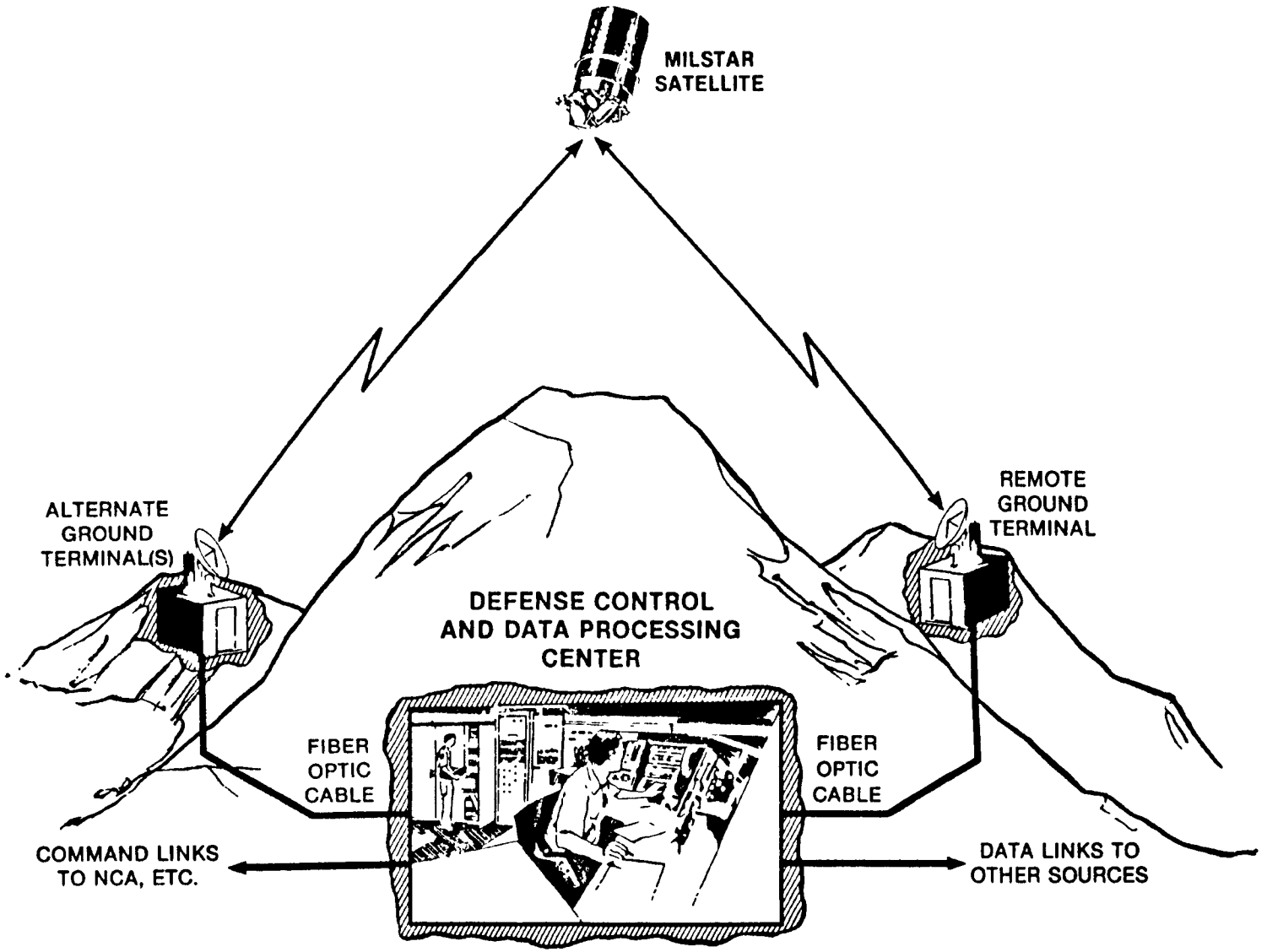

The amount of electrical power required for the remote ground terminal varies with its purpose and design. A receive-only terminal with a fixed antenna only requires electrical power to convert the signals and transmit them to the manned installation. This type of ground terminal could be powered by a small RTG. A transmit/receive satellite ground terminal with a tracking antenna, such as would be used with the Milstar satellite, would require a much larger electrical power unit, such as a dynamic isotope power system. This latter type of remote ground terminal is illustrated in the following discussion.

10.2.1 Siting

The unmanned, remote satellite ground terminal must be located with a clear field of view of the satellites with which it must communicate. This means the antenna must be located at an elevated site or must be far enough from surrounding hills if it is situated on level terrain. In hilly or mountainous terrain, the ground terminal(s) can be located on peaks at some distance from the underground control center. These terminals can be well beyond the range of nuclear blast effects from the primary installation and can even be behind a hill from it. These remote ground terminal(s) can be hardened against EMP threats, near-miss weapons bursts, sabotage, etc. by enclosing them in underground reinforced concrete vaults, similar to the cable repeater stations discussed earlier. A conceptual design of an unmanned hardened satellite ground terminal is shown in Figure 10.2.1.

Figure 10.2.1

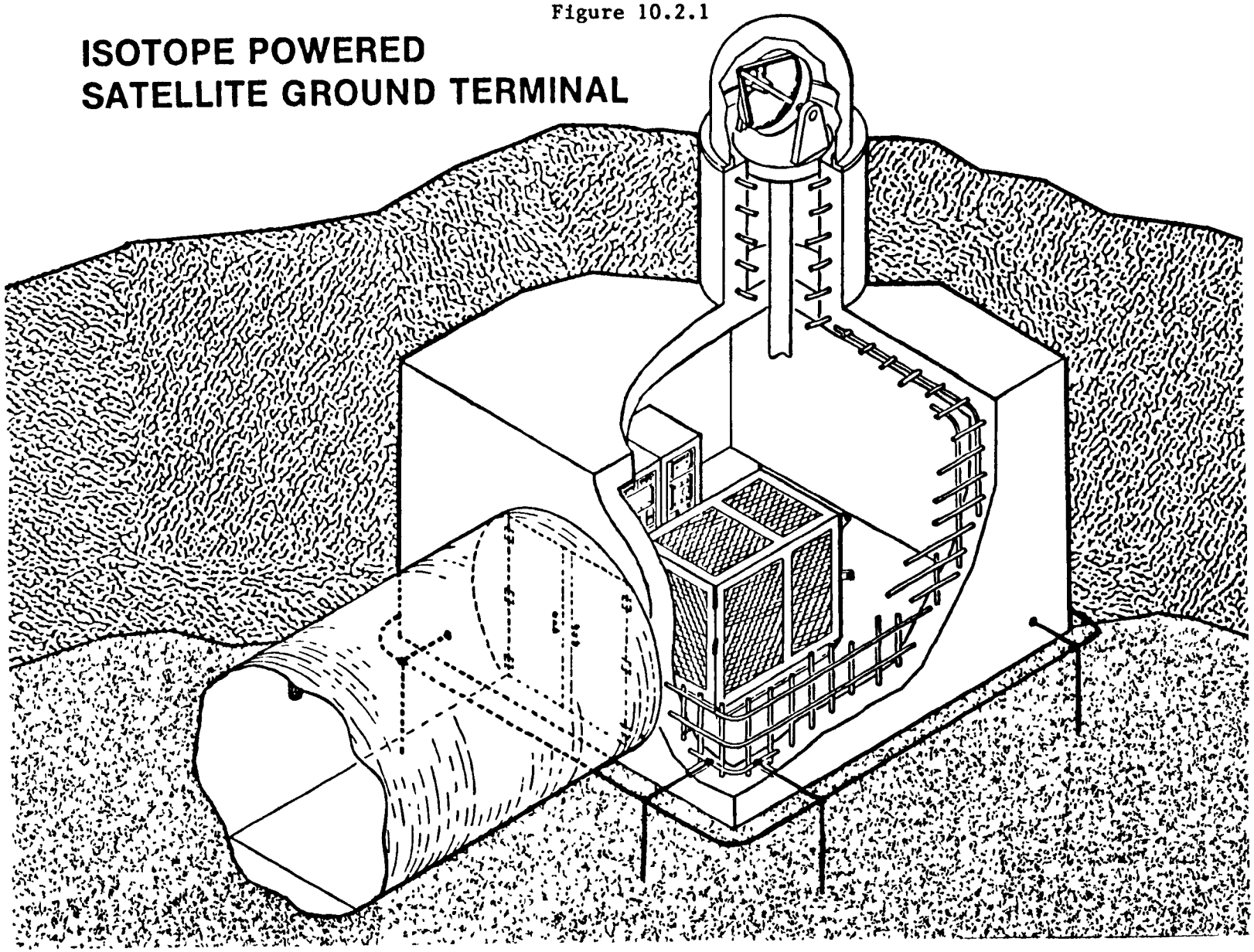

10.2.2 Equipment Vault

The reinforced concrete equipment vault for this application is based on the same hardness guidelines followed for the RTG powered repeater station. This equipment vault is somewhat larger (about 16 x 16 x 10 feet high inside dimensions) to provide space for the larger equipment. A side entrance is shown in Figure 10.2.1 with an access tunnel sloping away from the facility. This could lead to an entrance in a side of the hill on which the ground terminal is located. Other below-grade access designs can be used as long as they provide for handling the large, heavy (up to 4 tons) equipment and for ground run-off water drainage. The use of heavy metal doors in the side of the vault for a personnel and equipment entrance was deemed more appropriate for this application than a large access plug in the ceiling of the vault (as used before). The securable metal doors are grounded to and form a part of the EMP shield provided by the vault enclosure.

Figure 10.2.1 also shows a reinforced concrete column extending from the top of the equipment vault to or above ground level which supports and protects the antenna mount and related equipment. The antenna is shown in its normal operating position, within a protective radome weather enclosure. The antenna dish for use with Milstar, operating in the EHF range, is only about 4 feet in diameter. Antennas for use with current UHF military or civilian communications satellites would be much larger. The Milstar antenna must also have a near-hemispherical tracking capability. Antennas for use only with satellites is geostationary (geosynchronous equatorial) orbit can have a much more restricted tracking capability.

For hardening against the EMP threat, the antenna can be grounded; its waveguide feed can include a choke flange, filters, and/or a dielectric section to prevent unwanted signal interference and electrical energy pulses from being conducted into the ground terminal equipment; and, the antenna support and drive system can be designed to use only non-conducting (dielectric) materials between the exterior and the interior of the vault's electromagnetic shield. For example, the antenna drive system can use a mechanical system of gears, belts and pulleys, and/or hydraulic components on the outside of (and through) the shield so that any electrically driven motor/pumps can be protected within the shielded vault. (A detailed design of the antenna support and tracking system is beyond the scope of this study.)

The obvious question is: How can the exposed antenna be hardened against nuclear blast wave effects to achieve a balanced hardness for the entire ground terminal site? There are several options available, depending on the threat scenario for any particular application. If the ground terminal is located far enough from other prime targets, the weather-proof radome (or other exterior structure) can be built to withstand the low-level overpressures and winds. In this case, the entire facility might only be designed to resist physical damage and entry by clandestine threats (i.e. saboteurs). However, more redundant ground terminals of this type would be required to provide the necessary survivability for the overall ground segment. A much harder antenna installation, designed to counter much higher nuclear blast effects, can achieve the same degree of survivability with fewer ground terminals per primary installation.

One concept for protecting a small EHF antenna from nuclear blast effects is to be able to retract the antenna below ground level, within a reinforced concrete "silo", and cover it with blast doors or a movable cover slab of concrete. Since the antenna is not functional in the retracted position, it would only be placed in that position during standby (while other ground terminals were in use) or upon being alerted of incoming warheads. The antenna would have to be returned to its above-ground position for post-attack operation. This "pop-up" technique is currently used on some hardened C^3I systems. However, the larger the antenna, the more difficult and costly it is to protect it against nuclear blast effects.

Antennas and their support structures can be beefed-up to withstand much larger blast wave levels, but there is some limit in size and weight of the antenna subsystem which would require too much electrical power to move it (even during normal tracking) to use an isotope power system, and some other independent power source would be a more practical choice. Further investigations are needed to determine the best way of improving the hardness of various antennas in order to achieve a balanced hardness for the associated ground segment(s).

10.2.3 Site Equipment

In addition to the antenna and its related equipment (support, drive mechanism, controls, and antenna feed), the equipment vault provides space and protection for the ground terminal electronics and the dynamic isotope power system.

The electronics equipment includes interface units to convert the signals to and from the connecting fiber optic signal/control cables, frequency converters, and transmitter/receiver signal amplifiers, etc. normally required for an EHF transmit/receive terminal. This equipment is housed in a shielded and grounded electronics cabinet with special provisions for removing the waste heat generated by the electronic components. While in the receive-only or standby modes, the station uses only 200 to 300 watts of electrical power. In this case, the waste heat could be safely rejected to the surrounding air space through passive radiators. However, during the transmitting mode, several kilowatts of electrical power are required and all but about 1 kw must be rejected as heat. This requires an active (either pumped loop or heat pipe) cooling system for the electronics.

Assuming a radiated RF signal power of 1,000 watts from the antenna and a 1/9 transmit/receive duty cycle for the ground terminal, a continuous electrical power of 1.5 kwe is adequate to power the electronics and the antenna tracking system. For this illustrative application, this power is provided by the 1.5 kw Sr-90 fueled Terrestrial Organic Rankine Isotope Power System (TORIPS) discussed in Section 7.3. Sufficient battery storage capacity is provided to power the transmitter continuously for up to 30 minutes at a time. However, it would take at least 4 to 5 hours (in receive-only mode) to completely recharge the battery. Higher transmit/receive duty cycles are possible if less radiated power is required from the antenna.

A detailed design of a specific EHF ground terminal site might show that a somewhat larger TORIPS would be required for more operational flexibility in transmit/receive cycles or larger radiated RF power requirements. This illustration simply shows what can be done with the 1.5 kwe TORIPS discussed earlier. Dynamic isotope power units up to 5 kwe or so could be used for this type of application so long as the waste heat can be safely removed during normal operations or in case of an emergency, such as a failure in the power generating or power consuming equipment.

10.2.4 Thermal Considerations

In the 1.5 kwe system illustrated here, the Sr-90 heat source generates 7,500 watts (thermal) at BOL. Essentially all of this heat must be rejected continuously during normal and emergency operations. This heat load is more than ten times larger than that for the RTG repeater station; and it would be impractical to passively dump the heat through the walls of the vault without some sort of auxiliary heat rejection system.

Ultimately, the heat from an underground source must be delivered to and removed by the free atmospheric air above the surface of the ground. For small heat sources, and shallow depths of burial, soils with high thermal conductivities will dissipate the heat to the surface under reasonably small temperature gradients. However, for larger heat sources, greater depths, or lower soil conductivities, the temperature gradients required to remove the heat to and from the surface are too large and an auxiliary heat flow path must be provided between the source and the ambient atmosphere.

In the TORIPS powered ground terminal application, the air in the equipment vault must be maintained at a sufficiently low temperature to cool the TORIPS condenser/radiator, the power system electronics and battery, and the communication electronics. This would normally be done with environmental control equipment (i.e. a ventilation or cooling system) requiring power for air movement and/or cooling and air ducts to the surface. In order to minimize the electrical power requirements and to maximize the hardness of the installation, and the reliability of the heat rejection system, a passive (unpowered) thermal siphon system can be used between the air within the vault and the ambient atmosphere.

A heat exchanger (evaporator) can be used near the ceiling (and perhaps along the walls) of the vault to pick up the heat from the enclosed air by evaporating a low-temperature coolant. The low density vapor would rise through connecting pipes to another heat exchanger (condenser) located above ground where the air can remove its heat, causing it to condense to a liquid. The liquid would flow back to the evaporator, due to gravity, to complete the cycle.

The heat exchangers must be constructed of metal to achieve the heat transfer required; but the thermal siphon system can be hardened by grounding the internal and external heat exchangers, connecting them with dielectric piping through the vault shield, and beefing up the external heat exchanger to withstand blast wave effects.

The detailed thermal analysis required to size the thermal siphon system and to determine actual temperature gradients to be expected is

beyond the scope of this study. However, this is a flexible, survivable, and reliable heat rejection system which can be adapted to any such underground application. (The thermal siphon heat rejection system might be needed for the RTG powered cable repeater station discussed under Section 10.1 in some hot and dry locations.)

In locations where icing conditions occur, the antenna enclosure (radome) might also be used to reject the waste heat and at the same time prevent ice build-up on the radome without providing additional electrical power. The thermal integration of the power system, electronics, and facility enclosure must be tailored to the application and its location.

10.3 Safety

These proposed applications of terrestrial isotope power systems in remote, unmanned C^3I/BM installations are well within the bounds for safe use of such Sr-90 power units, as demonstrated by past experience. The power units are designed and built to safety standards to protect operating personnel during normal handling, transportation, and use; and to prevent release of radioactive material or over-exposure of operating personnel or anyone else under accidental or emergency conditions. In the proposed applications, the power systems are further protected by the underground equipment vaults which also physically separate them from the general populace.

Total containment of the radioactive fuel material is assured by doubly encapsulating the fuel in heavy walled, superalloy fuel capsules and

liners which are fabricated and seal-welded under stringent nuclear quality control standards. The liner and capsule materials are selected based on their chemical compatibility with the fuel materials and their decay products at temperatures and times well in excess of those encountered in operational use. These capsules are designed and tested to contain the fuel under all probable operating and accident conditions which could be encountered during their transportation and use, including impact, fire, over-pressure and corrosive environment conditions. The fuel capsules are further protected by the heavy biological shield and the generator housing surrounding them.

The fuel continues to generate heat at a totally predictable and unalterable, but declining rate. This provides a very reliable, long-lived heat source; but it also means the heat must be continuously removed to prevent over-heating the fuel capsules and/or power system components. Should the system become insulated well enough and long enough to cause the fuel capsules to melt, the fuel form would still be contained within the shield and generator/heat source housing. It is highly improbable that the unit could be insulated well enough and long enough to melt the tungsten biological shield (melting point over 3000°C (5432°F)). As long as the shield is intact, the fuel is contained and its direct radiation threat to personnel is controlled.

The biological shield reduces the radiation levels on the exterior of the generator (or shipping/installation container) to those approved for shipping, handling and operating personnel. Obviously, these low radiation levels are not harmful to anyone having uncontrolled, but limited, access

to the power supply. In the proposed applications, the underground vaults prevent access by unauthorized personnel; and the external (above-ground) radiation levels from the isotope power units would be below natural background levels for most locations. An exclusion fence, where appropriate, and/or an intrusion alarm system would serve as a positive means to protect the general populace from exposure as well as to protect the equipment from intruders.

Should anyone gain access to the underground equipment vault, the shielded heat source unit containing the radioactive material is too large and too heavy to remove without heavy-duty handling equipment (e.g. crane, fork lift, etc.). There are no nuclear proliferation concerns about unattended Sr-90 fueled isotope power units falling into the wrong hands, because they contain no special nuclear (i.e. fissionable) materials.

An added safety feature of the proposed applications is that the site is fire-proof and earthquake resistant. The underground, airtight, passively cooled, reinforced concrete vaults are about as good as can be done for safe, engineered storage of radioactive materials.

Once the isotope power units have fulfilled their operational mission requirements, they can be returned to the DOE for safe disposal or perhaps recovery and recycle of the remaining Sr-90 fuel.

For the safety of operating personnel, and to maintain proper exposure records, standard precautionary radiation monitoring procedures should be performed at the site prior to personnel entering and working in

the equipment vault. These include simple air samples and surface swipe samples of the equipment to establish a positive record that there has been no release of radioactive material from the power unit, or that the radiation levels from the unit have not changed. In addition, portable exterior air supplies (i.e. blowers) would probably be required to provide fresh, cool air in the vault for the comfort of personnel operating in the equipment vault, just as communications workers now do in manholes without environmental control systems.

The isotope power units for these applications must be built and tested to meet Nuclear Regulatory Commission (NRC), International Atomic Energy Agency (IAEA), and Department of Transportation (DOT) standards for such units. Each generic application will require a comprehensive Safety Analysis Report (SAR) to be prepared and reviewed prior to receiving approval for the intended operational use (whether or not formal licensing is required). Conclusions from the SAR will also be necessary for any Environmental Impact Statement (EIS) required prior to installing the nuclear-powered C^3I/BM system. Well established procedures and precedents have been established in this area so that no great institutional or socio-political problems are envisioned concerning these proposed military applications.

11.0 IMPLEMENTATION PLAN

This section describes how isotope power systems can be obtained for survivable C^3I/BM ground segments for the SDI and other national defense programs. Its purpose is to summarize in one place the various steps necessary for program planners to consider in the development, production, and use of such terrestrial isotope power units.

The first step is to establish a need for these units within the DOD, i.e., for the various program elements involved to convince themselves that isotope power units have the potential for improving the survivability of C^3I/BM ground segments at an affordable life-cycle cost. This study report represents a first attempt at this. However, additional studies might be required which are directed at specific needs of the DOD program(s) in order to provide more detailed and quantitative data on power levels, thermal integration considerations, hardness of components (e.g., RTGs, antennas, etc.), schedules and costs. It is also necessary for the DOD program planners to understand that this is just another type of nuclear program for the military that requires the support of the DOE organizations which were established to provide such support to the DOD.

Having defined a need for C^3I/BM isotope power units within the DOD, a joint DOD/DOE program must be established to fulfill that need. This is normally initiated by a DOD requirement letter, through established interagency committees such as the Military Liaison Committee (MLC), to the DOE. Then program staffs within the two agencies can prepare a Memorandum of Understanding (MOU) which defines their respective roles and

responsibilities for carrying out the joint program. The MOU forms the basis for planning and budgeting for the program within the two agencies, as well as obtaining the support of the OMB and Congress. This might sound complicated, and perhaps cumbersome, to a DOD program manager, but it can be done simply and quickly as evidenced by many similar terrestrial and space isotope power programs for military applications in the past. The DOD program manager does not relinquish control of an integral part of his system; and he gains the resources of another large government agency to meet the interagency commitments set forth in the MOU.

The DOE has strong incentives, and indeed a stated policy, to support DOD requirements and programs of national strategic significance. As discussed earlier, an objective of the DOE's Byproduct Utilization Program is to promote beneficial uses of Sr-90 fission products generated in the defense reactors. In addition, DOE's nuclear waste management programs can be guided by the recovery and beneficial use of its waste byproducts. The DOE is chartered by the Atomic Energy Act to conduct the development and demonstration of devices which utilize nuclear materials.

Therefore, it is DOE policy to develop and demonstrate first-of-a-kind isotope power systems for new government applications. To support prototype applications, the DOE will provide the fuel, heat sources and safety support, as required, as well as contract for the development and qualification of the prototype power systems. The DOE will also support the use of isotope power units by government agencies by providing special transportation services, assistance in the event of an emergency involving the nuclear units, and recovery of the units for safe disposal.

Follow-on production of isotope power units can be handled in various ways. However, the production of the Sr-90 fuel form, encapsulation of the fuel in the heat source, and loading the heat source into a shielded generator or shipping container must continue, for the foreseeable future, to be performed at DOE facilities. There might be some time in the future when the volume of business in this area becomes large enough and routine enough to entice commercial ventures to become involved in it. For now, the DOD would budget for the costs of these production operations and reimburse the DOE as agreed to in the MOU and as required by the Economy Act of 1931. The production of the thermoelectric generators or dynamic isotope power systems, the associated non-nuclear heat source/shielding components, and support equipment by industrial contractors under government contracts is also best done by the DOE with reimbursement of costs by the DOD. This way the DOE expertise, carried over from its development responsibilities, can be utilized to assure the production of safe, qualified power systems and is available to make modifications or product improvements required during the production program. In addition, nuclear indemnification of its contractors can be granted by the DOE under the Price-Anderson legislation. Many post-development isotope power systems have been successfully procured in this manner in the past for use on government programs.

Although standard commercial RTGs are available, which are already licensed or easily licensable for such DOD applications, and could be procured by the DOD program; a joint DOD/DOE program is required to establish DOE fuel production and encapsulation capabilities for cost effective Sr-90 heat sources. An RTG system contractor is also required to

support the safety approvals and perform the system integration activities for new applications. Until the operational use of isotope power units in C^3I/BM ground segments becomes more routine, it would be more practical to handle the procurement of the entire isotope power system as an integrated unit than to split responsibilities for procurement of the power system between agencies, whether a standard RTG or the development of a dynamic isotope power system is required.

In order for Sr-90 fueled power units to be available for use in SDI C^3I/BM ground segments, adequate lead times must be allowed for the DOE to plan, budget, and contract for the establishment of fuel production and encapsulation facilities and the development of prototype (first-of-a-kind) power systems. Prototype Sr-90 fueled RTGs can be provided for a demonstration or field tests within a year or two after being requested by the DOD, assuming availability of funding. Modification of the DOE's Waste Encapsulation and Storage Facility (WESF) for production and direct delivery of Sr-90 heat sources would require a longer time, perhaps 2 to 3 years. The installation and check-out of Sr-90 recovery and encapsulation capabilities at Savannah River will require 5 years or more from go-ahead. The development and test of a prototype Sr-90 fueled dynamic isotope power system will require 3 to 4 years after award of contract. These estimated lead times are consistent with published SDI program schedules, assuming that interagency planning and coordination between the DOD and the DOE proceeds in a timely manner.