NOTICE

CERTAIN DATA CONTAINED IN THIS DOCUMENT MAY BE DIFFICULT TO READ IN MICROFICHE PRODUCTS.

DOE/PC/89659--T1

DOE/PC/89659--T1

DE91 000014

FINAL

ENVIRONMENTAL INFORMATION VOLUME FOR THE COKE OVEN GAS CLEANING PROJECT AT THE BETHLEHEM STEEL CORPORATION SPARROWS POINT PLANT

U.S. DEPARTMENT OF ENERGY

COOPERATIVE AGREEMENT NO. DE-FC22-90PC89659

PREPARED FOR

BETHLEHEM STEEL CORPORATION

PREPARED BY

ENVIRONMENTAL RESOURCES MANAGEMENT, INC.

APRIL 24, 1990

***

PATENTS CLEARED BY CHICAGO ON MAY 14, 1990

DISCLAIMER

This report was prepared as an account of work sponsored by an agency of the United States Government. Neither the United States Government nor any agency thereof, nor any of their employees, makes any warranty, express or implied, or assumes any legal liability or responsibility for the accuracy, completeness, or usefulness of any information, apparatus, product, or process disclosed, or represents that its use would not infringe privately owned rights. Reference herein to any specific commercial product, process, or service by trade name, trademark, manufacturer, or otherwise does not necessarily constitute or imply its endorsement, recommendation, or favoring by the United States Government or any agency thereof. The views and opinions of authors expressed herein do not necessarily state or reflect those of the United States Government or any agency thereof.

DISTRIBUTION OF THIS DOCUMENT IS UNLIMITED

TABLE OF CONTENTS

Section		Page
1	Introduction	1-1
2	The Proposed Action and Its Alternatives	2-1
2.1	The Proposed Action	2-1
2.1.1	Site Description	2-1
2.1.2	Existing Plant Operation	2-5
2.1.3	Engineering Description of the Proposed Action	2-13
2.1.3.1	Description of Project Phases	2-23
2.1.3.2	Description of Installation Activities	2-28
2.1.3.3	Project Source Terms	2-28
2.1.3.4	Potential EHSS Receptors	2-38
2.2	Alternatives to the Proposed Action	2-38
2.2.1	The No Action Alternative	2-38
2.2.2	Alternative Technologies	2-39
2.2.3	Alternative Sites	2-41
3	Existing Environment	3-1
3.1	Atmospheric Resources	3-1
3.2	Land Resources	3-5
3.3	Water Resources	3-14
3.4	Ecological Resources	3-20
3.5	Socioeconomic Resources	3-21
3.6	Energy and Material Resources	3-24
4	Consequences	4-1
4.1	Atmospheric Impacts	4-1
4.2	Land Impacts	4-2
4.3	Water Quality Impacts	4-4
4.4	Ecological Impacts	4-5
4.5	Socioeconomic Impacts	4-6
4.6	Energy and Materials Impacts	4-6
4.7	Impact Summary	4-6

TABLE OF CONTENTS (continued)

Section		Page
5	Regulatory Compliance	5-1
5.1	Regulations and Permit Requirements	5-1
5.2	Anticipated Permit Modifications	5-1
5.2.1	Air Permits	5-1
5.2.2	Water/Solid Waste Permits	5-3
5.2.3	Other Required Permits and Approvals	5-5
5.2.3.1	Chesapeake Bay Critical Area	5-5
5.2.3.2	Review of Historic Properties	5-6
5.2.3.3	Coastal Zone Program Consistency	5-6
5.3	Potentially Applicable Regulatory Initiatives	5-6
6	References	6-1
Appendix A	Priority Pollutants Analytical Data	
Appendix B	Copies of Relevant Permits	
Appendix C	Administrative Consent Order	
Appendix D	Records of Agency Contacts	

LIST OF FIGURES

Figure		Page
2-1	Location of Sparrows Point	2-2
2-2	Aerial View of Sparrows Point Plant	2-4
2-3	Existing Plant Layout	2-6
2-4	Flow Diagram for Existing Process	2-8
2-5	Layout for Proposed Gas Treatment System	2-16
2-6	Aerial View of Project Site	2-17
2-7	Unit Operations in the Proposed Process	2-18
2-8	Ammonia/Hydrogen Sulfide Removal and Recovery Units	2-19
2-9	Ammonia Destruction and Sulfur Recovery Units	2-20
2-10	Project Implementation Schedule	2-24
2-11	New and Existing Gas Treatment Equipment	2-29
3-1	Distribution of Hourly Wind Direction and Average Wind Speed for Wind Direction	3-2
3-2	Topographic Map of Sparrows Point Area	3-6
3-3	Flood Zones Around Sparrows Point	3-7
3-4	Geologic Cross-Section	3-9
3-5	Chesapeake Bay Critical Area Boundary	3-12
3-6	Location of Archaeological Sites within One Mile of Project Site	3-13
3-7	Water Bodies in the Sparrows Point Area	3-15
3-8	Wetlands of the Sparrows Point Area	3-22

LIST OF TABLES

Table		Page
2-1	Typical Composition of Raw Coke Oven Gas	2-11
2-2	Existing Biological Treatment Plant Loading	2-12
2-3	1987 Monthly Average Concentrations in Discharge from Wastewater Treatment Plant	2-14
2-4	Resource Requirements for Existing and Proposed Coke Oven Gas Cleaning Process	2-30
2-5	Projected Labor Requirements for Construction	2-33
2-6	Comparison of Existing and Proposed Loading to the Biological Treatment Plant	2-37
3-1	Ambient Air Quality Standards	3-3
3-2	Water Quality Criteria	3-17
3-3	Regional Inorganic Ground Water Quality	3-19

SECTION 1

INTRODUCTION

On December 19, 1985, President Reagan signed Public Law No. 99-190, which provides funds to conduct clean coal technology projects that are cost-shared between industry and government. To implement this law, the Department of Energy (DOE) instituted a Clean Coal Technology Program. The goal of this program is to evaluate emerging technologies that are designed to utilize coal more cleanly, efficiently, or economically than is achievable using currently available technology. Individual clean coal projects are intended to demonstrate the feasibility of future commercial applications of emerging technologies. DOE issued its most recent Program Opportunity Notice (PON) on February 22, 1988, to provide prospective applicants with information about the Clean Coal Technology Program.

In response to that PON, the Bethlehem Steel Corporation (BSC) is planning to conduct a demonstration project involving an integrated system that can be retrofitted into coke oven gas handling systems to address a variety of environmental and operational factors in a more cost-effective manner. Successful application of this technology to existing U.S. coke plants could:

- reduce emissions of sulfur dioxide, cyanide, and volatile organic compounds (including benzene),
- reduce the cost and handling of processing feed chemicals,
- reduce the disposal costs of nuisance by-products, and
- increase reliability and reduce operation/maintenance requirements for coke oven gas desulfurization systems.

The successful demonstration of a practical retrofit technology could provide domestic cokemakers with a cost-effective method of achieving increasingly stringent environmental standards, as an alternative to the prohibitively expensive replacement of cokemaking by-product facilities.

The system to be demonstrated consists of a unique arrangement of previously demonstrated technologies. The proposed system will remove sulfur from the coke oven gas in the form of hydrogen sulfide using the ammonia indigenous to the gas as the primary reactive chemical. Ammonia and hydrogen cyanide are also removed in this process. The hydrogen sulfide removed from the coke oven gas is routed to a modified Claus plant for conversion to a saleable sulfur by-product. Ammonia and hydrogen cyanide will be catalytically converted to hydrogen, nitrogen, carbon dioxide, and carbon monoxide. The tail gas from the sulfur recovery unit is recycled to the coke oven gas stream, upstream of the new gas cleaning system.

The proposed demonstration project will be installed at the existing coke oven facilities at BSC's Sparrows Point Plant and will replace current gas processing. This volume describes the proposed actions to be taken at the Sparrows Point Plant and the resulting environmental impacts.

The purpose of this volume is to provide DOE with all relevant information on the environmental, health, safety, and socioeconomic impacts of this proposed project. This information is intended to aid DOE in preparing the environmental documents required to comply with the National Environmental Policy Act of 1969.

SECTION 2

THE PROPOSED ACTION AND ITS ALTERNATIVES

The proposed project is to be located within the existing process areas at the Bethlehem Steel Sparrows Point Plant. This section describes the existing facility at the Sparrows Point Plant, presents a brief technical description of the proposed coke oven gas cleaning process, describes the anticipated demonstration project, defines project resource requirements and discharges, and lists Environmental, Health, Safety, and Socioeconomic (EHSS) areas that could potentially be affected by the project.

2.1 The Proposed Action

2.1.1 Site Description

The Sparrows Point Plant is an integrated iron and steel complex which has operated at this site since 1889. The complex consists of both raw steelmaking and finishing operations. The plant occupies approximately 3,000 acres of the Sparrows Point Peninsula, which extends into the Patapsco River from its eastern shore in Baltimore County, Maryland. Figure 2-1 shows the general location of the plant, about 10 miles southeast of downtown Baltimore, Maryland.

There are three basic operations involved in steelmaking. First, coal is pyrolytically converted to coke (primarily carbon) in the coke ovens. Second, coke is combined with iron ore and limestone in the blast furnace to produce iron. Third, iron is refined into steel in the basic oxygen or open hearth furnaces. The steel is cast into slabs in the continuous casting process or poured into ingot molds.

The ingots or slabs undergo various finishing or forming operations in the primary and plate mills. The hot strip mill utilizes the slabs to produce coiled steel for sale or for further production in the cold sheet or tin mill. The cold sheet mill and tin mill finishing operations impart certain surface or mechanical

Figure 2-1
Location of Sparrows Point in Baltimore County, Maryland

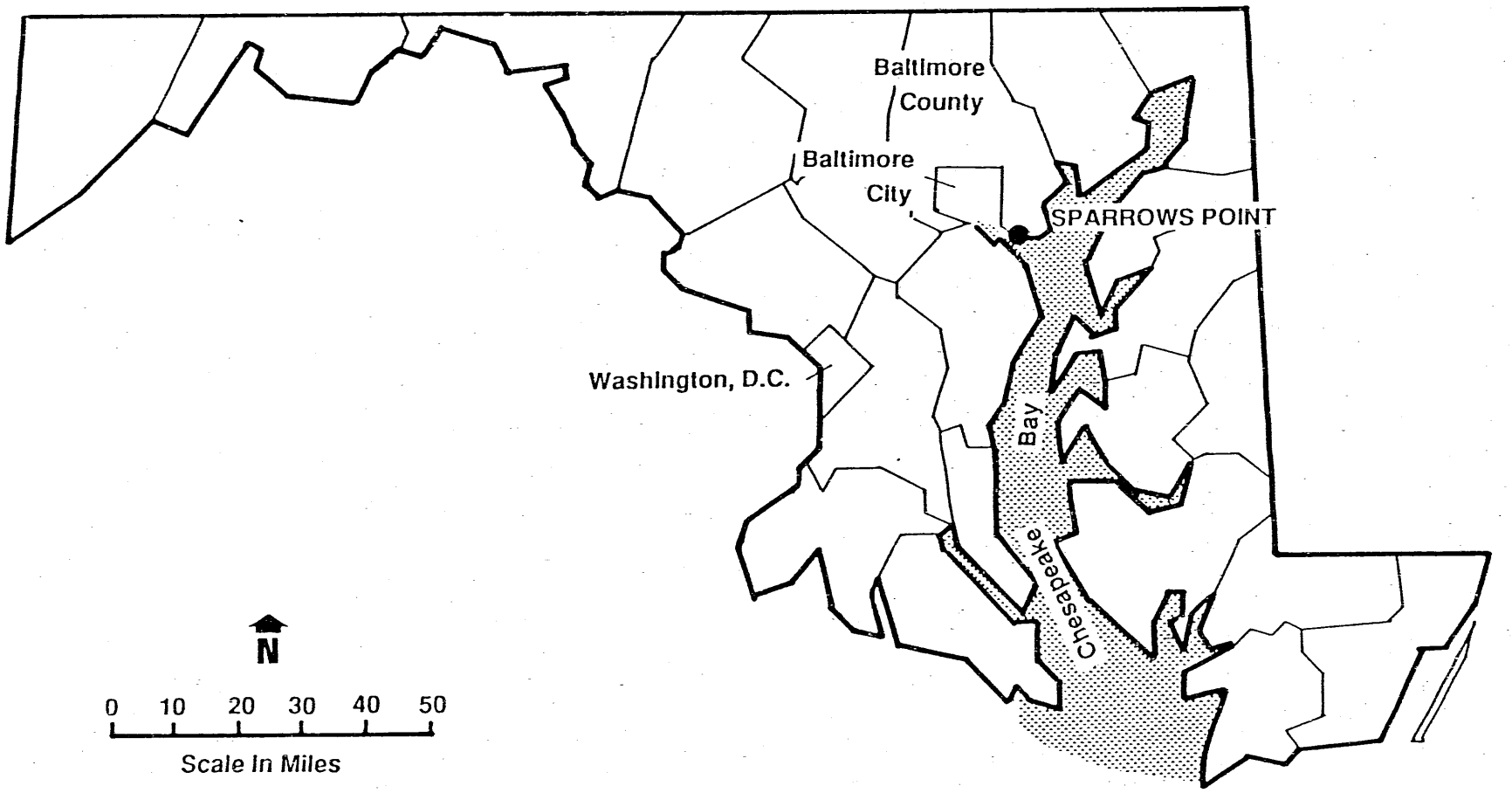

The ERM Group

characteristics to the product. In 1988, the Sparrows Point Plant produced approximately 3.9 million tons of steel products, of which approximately 2 million tons were light flat roll products.

The proposed coke oven gas cleaning project will be physically located at the existing "B" Coal Chemicals Plant at the Sparrows Point Plant Coke Works. The coke works includes three working coke oven batteries (eight others are no longer operating), and two coal chemicals plants, designated "A" and "B." These facilities constitute the southernmost structures on the site. The demonstration plant will be constructed in between and in place of existing facilities at the southern edge of this area. An aerial photo of the entire steelworks showing the location of the proposed demonstration plant is included as Figure 2-2. The existing coal chemicals plant has all of the conventional infrastructure (electricity, steam, water, sewer, etc.) needed to service the proposed project.

The plant has good access to the surrounding area by both land and water modes. The plant has its own docking facilities to accommodate deep-draft vessels and barges. Rail service is by BSC's Patapsco and Back River Railroad, which interconnects to the Chessie System, Conrail, and the Western Maryland Railway. Coal is generally shipped from the mines to the Baltimore area by rail. The coal is then loaded onto barges for delivery to the open coal storage area at Sparrows Point.

Access by major highways is comparatively good for a peninsula. This is largely due to the completion of the Patapsco Freeway, a four-lane divided highway connecting Sparrows Point directly to the Baltimore Beltway (I-695). Access has been further improved by the completion of the Francis Scott Key Bridge between Hawkins Point and Sollers Point.

The Sparrows Point Plant has four water systems. The City of Baltimore supplies potable water, the Back River Sewage Treatment Plant's treated effluent is used for process water and noncontact cooling, water from the Patapsco River is used for noncontact cooling, and a limited quantity of well water is used for contact cooling.

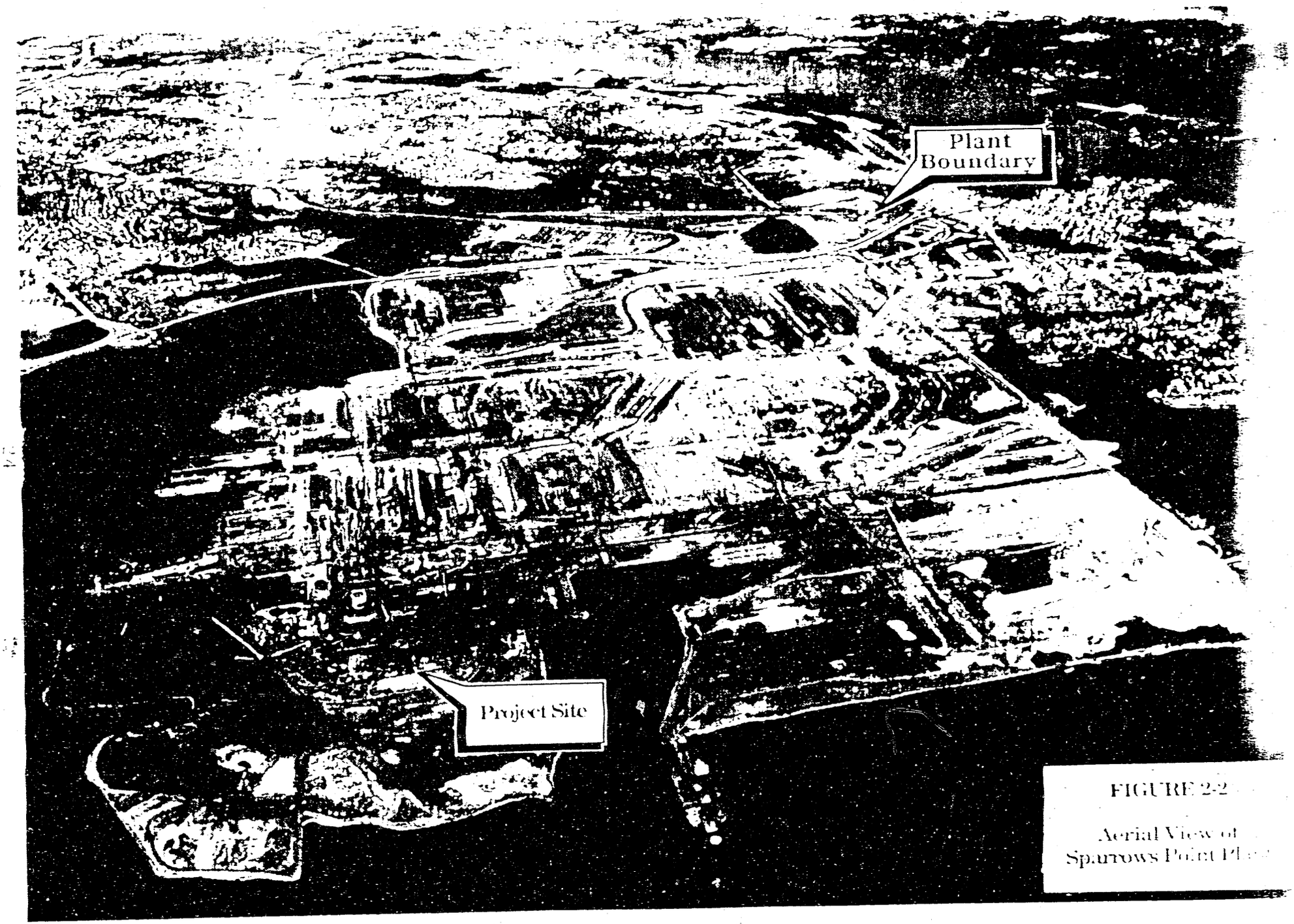

FIGURE 2-2

Aerial View of
Sparrows Point Plant

2.1.2 Existing Plant Operation

The proposed demonstration plant will be located in the Coke Works of the Sparrows Point Plant. More specifically, the proposed project will be retrofitted into the coal chemicals plants, which recover by-products from the cokemaking process.

Coke batteries are operated at integrated steel plants to supply metallurgical coke for chemical reduction of iron ore in the blast furnaces. Coke is produced by the destructive distillation (heating in the absence of air to drive off volatile components) of bituminous coal. Approximately 70 percent of the coal feed is converted to the coke product, with the remaining 30 percent driven from the coal as by-product gases and vapors. These offgases are treated in the coal chemicals plants to recover usable by-products such as coke oven gas, sulfur, coal tar, light oils, and ammonium sulfate. The by-product coke oven gas is used as a fuel to heat the coke ovens and to fire the furnaces at the steel plant. All other by-products are sold to outside customers.

The Sparrows Point Coke Oven Department operates three coke oven batteries (A, 11, and 12) and two coal chemicals plants (A and B). The coke ovens currently consume approximately 5,700 tons of coal per day and produce approximately 4,000 tons of coke and 74 million standard cubic feet (SCF) of coke oven gas per day. In addition, the coal chemicals plants currently produce approximately 4.1 tons of recovered sulfur, 43,000 gallons of coal tars, 23,000 gallons of light oils, and 36 tons of low-grade ammonium sulfate per day. The coal utilized in the coking process is a combination of low and high volatile coking coals from BSC's mines in Pennsylvania, West Virginia, and Kentucky. This coal is sometimes supplemented with purchased domestic coal. The specification for the coke that is used in the blast furnaces limits the range of acceptable coals for the cokemaking process.

Figure 2-3 shows the current layout of the coke oven gas treatment equipment at the B Coal Chemicals Plant. A simplified flow diagram, illustrating the present

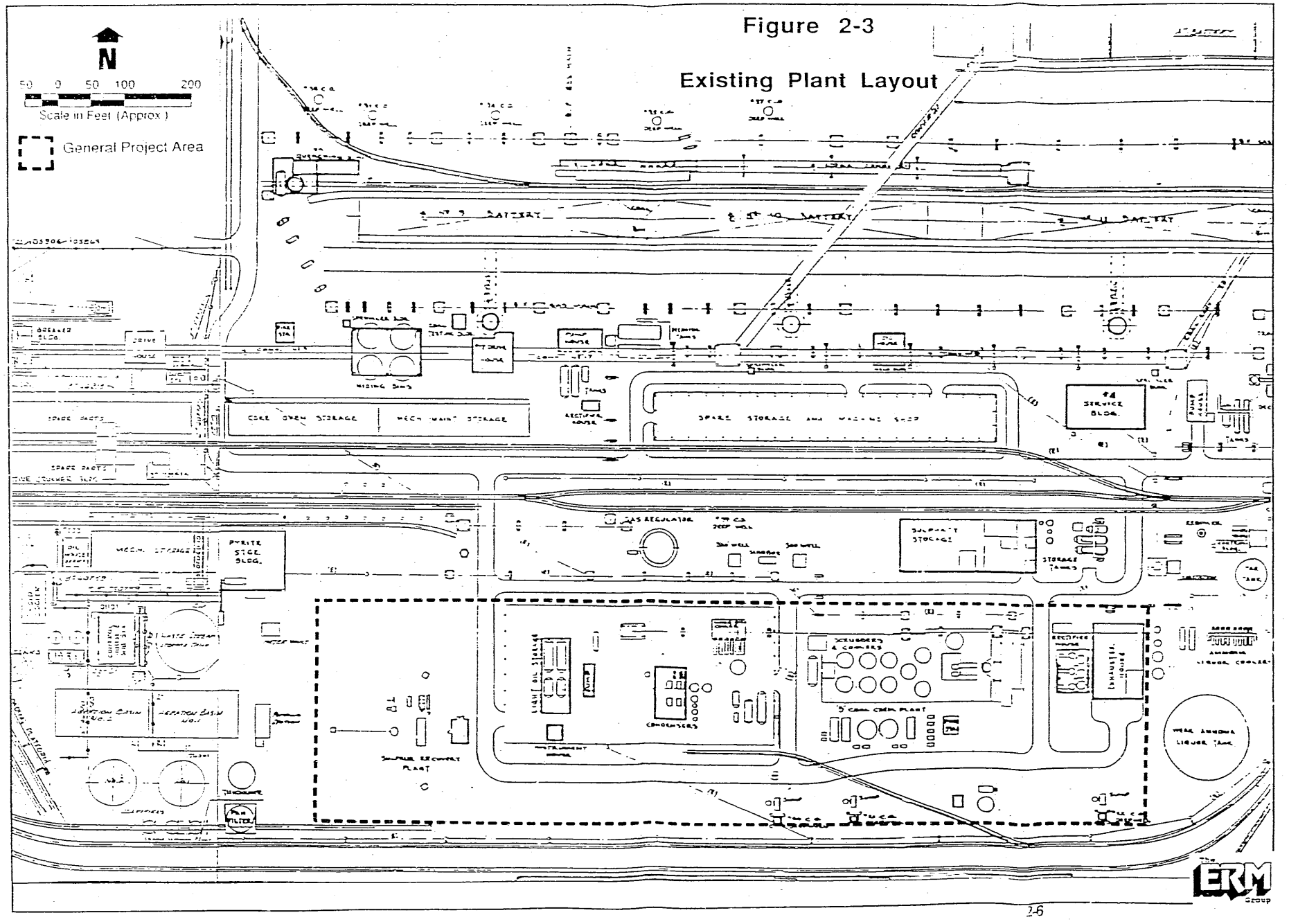

Figure 2-3

Existing Plant Layout

coke oven gas cleaning process, is included as Figure 2-4. The function of each of the components of the current coke oven gas cleaning system is described below.

- Primary Cooling and Tar Removal

The crude gas leaving the coke oven chambers is cooled first by liquor sprays located in the oven offtakes. The weak ammonia liquor used is called flushing liquor and provides a carrying medium for the condensed tars and solids that are carried out of the ovens with the crude gas. The liquor flows by gravity from the oven collecting mains and the suction main to a decanter tank.

Gas from the A Battery is handled in the A Coal Chemicals Plant; gas from the 11 and 12 Batteries is processed in the B Plant. In the coal chemicals plant, the gas is cooled further in the primary cooling step to remove additional tar and a major portion of the water vapor to reduce both the volume and temperature of the gas before it is sent through the by-product system. The condensate is transferred to the decanter tank. Tar settles out in the decanter tank and is removed from the bottom and pumped out for storage prior to delivery to customers.

The cooled gas passes through the exhausters that provide pressure for transporting the gas downstream through the plant. The exhausters operate on high-pressure steam and generate low-pressure steam which is used in downstream processes. Gas leaving the exhausters contains small amounts of tar that would cause difficulty in the operation of subsequent units in the system if not removed. This tar is removed in an electrostatic precipitator and flows from there to the decanter tank for separation. After the tar is separated from the flushing liquor, most of the liquor is recirculated to the ovens for gas cooling, while the excess is processed in an ammonia still.

- Ammonia Removal and Recovery

The ammonia formed during coking is partially removed from the gas by contact with the flushing liquor. Additional ammonia is removed by reacting it with sulfuric acid in the saturators.

Figure 2-4

Flow Diagram For Existing Process

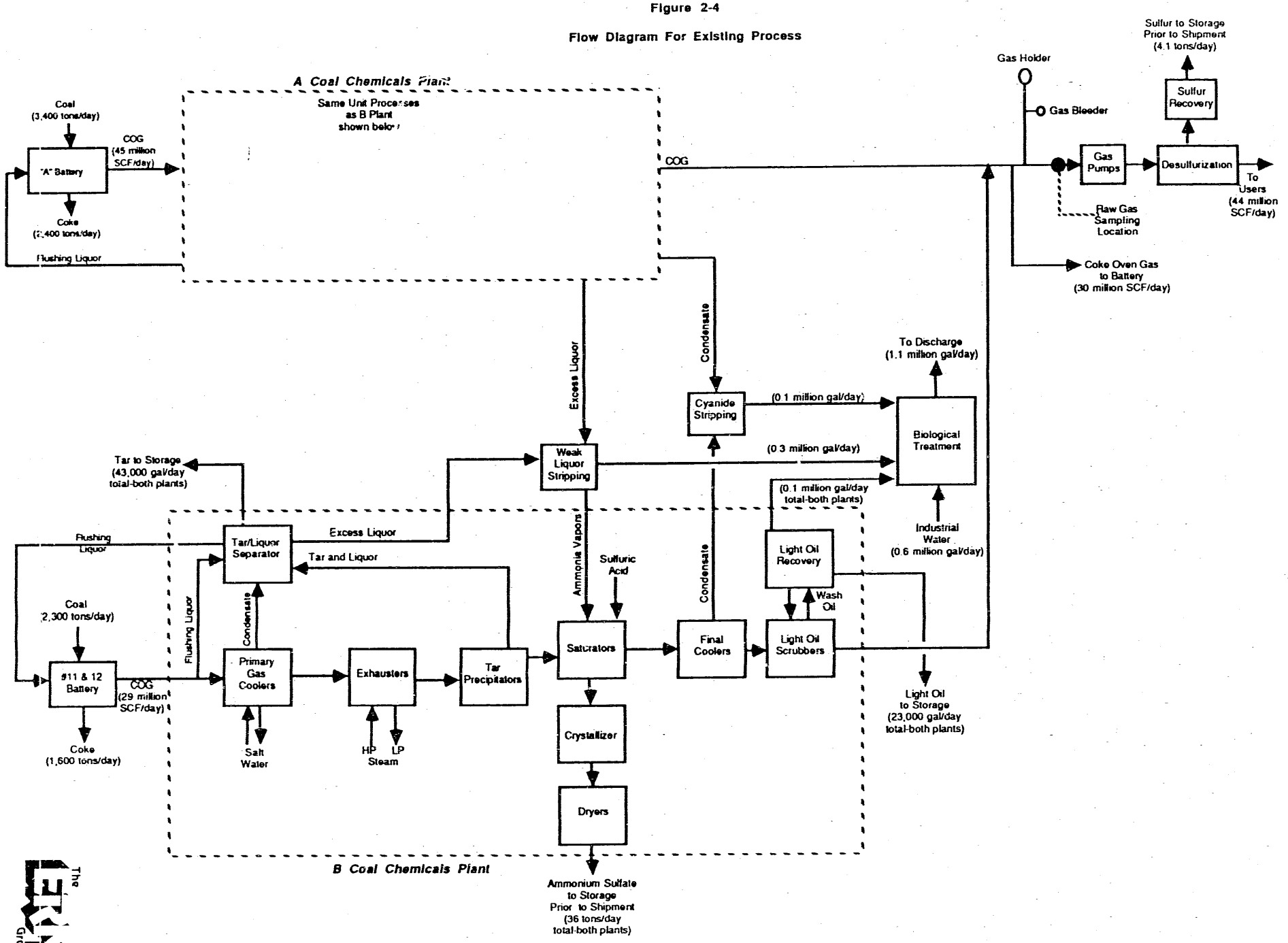

The Group

After leaving the tar precipitators, the coke oven gas enters the bottom of the ammonia absorber vessels or saturators, where it contacts a spray of sulfuric acid as it flows upward. The reaction of the sulfuric acid with the ammonia forms ammonium sulfate in solution, which flows from the bottom of the saturator into a crystallizer tank. As the gas leaves the saturator, it flows through an acid catcher, which collects any sulfuric acid that was carried over with the gas and returns it to the saturator.

The solution in the crystallizer tank becomes saturated and crystals of ammonium sulfate are precipitated. A portion of this slurry is removed and pumped to a slurry tank and the remaining portion is pumped to the spray nozzles in the absorber. The amount of the recirculation and draw-off to the slurry tank varies with the quantity of ammonia contained in the inlet gas. The solid ammonium sulfate is separated out of the slurry and dried before being sold and shipped off site.

- Final Cooling

From the saturators, the gas flows to a final cooler, since lower temperatures promote more efficient recovery of light oil. The final cooling system at Sparrows Point uses wash oil. The wash oil is cooled by indirect heat exchange and recirculated to the final cooler. A slip stream is routed to light oil recovery for removal of light oil. At the Sparrows Point Plant, benzene emissions are not expected from the indirect spiral cooling of the wash oil. However, at steel plants which use direct final cooling, this is typically a significant source of benzene emissions.

- Light Oil Recovery

Benzol washers, also known as benzol scrubbers or light oil scrubbers, are next used in the gas cleaning process for removing benzene, toluene, and xylene contained in the coke oven gas. The process uses a petroleum wash oil as the absorbent. After the wash oil has absorbed the light oil from the gas, it is pumped to the light oil recovery plant and then recirculated back through the scrubbers. After undergoing light oil scrubbing, the gas streams of the A and B Plants are combined. About one third of the cleaned coke oven gas is delivered to the coke

oven batteries while the remainder is routed to the desulfurizers and distributed to other consumers in the steelworks.

- Sulfur Removal and Recovery

Approximately two thirds of the total gas flow is desulfurized under the present system. Table 2-1 gives the typical makeup of the coke oven gas before desulfurization (at the sampling location indicated in Figure 2-4). The existing sulfur removal process uses a vacuum carbonate system to scrub the hydrogen sulfide from the gas. The clean gas is sent to consumers in the plant. The hydrogen sulfide that has been removed from the coke oven gas is stripped from the carbonate solution and routed to the existing Claus sulfur recovery unit for conversion to elemental sulfur.

- Effluent Treatment

To maintain the overall liquids balance, some of the recirculating flushing liquor is withdrawn from the system and must be treated prior to discharge. This excess liquor is sent to the ammonia still, then to the biological treatment plant.

Ammonia is present in the flushing liquor in two forms, free and fixed. In the ammonia still, excess flushing liquor is reacted with lime to convert all the ammonia to a free form, which is then released by steam stripping. The still is located at the B Coal Chemicals Plant, although it treats excess liquor from both the A and B Plants. The ammonia that is released by the steam flows upward and out of the top of the still into the gas line, joining the coke oven gas in the B Plant after it leaves the electrostatic precipitators.

The stripped liquor flowing from the bottom of the ammonia still contains phenols and cannot be discharged without further treatment. This effluent is sent to the coke oven wastewater treatment plant for biological oxidation. Other influents to the treatment plant are wastewaters from the light oil recovery units, and from the air stripper that removes hydrogen cyanide from the final cooling condensate. A small blowdown stream from the waste heat boiler at the existing Claus plant is also routed to the wastewater treatment plant. The wastewater flows and the total loadings of contaminants to the biological treatment plant are shown in Table 2-2.

Table 2-1

Typical Composition of Raw Coke Oven Gas

Bethlehem Steel Corporation
Sparrows Point Plant

Hydrogen	55%
Methane	25%
Nitrogen	10%
Carbon monoxide	6%
Carbon dioxide	2%
Volatile organic compounds (benzene, toluene, xylene)	2%
Ammonia	up to 300 grains/100 cu. ft.
Hydrogen sulfide	up to 340 grains/100 cu. ft.
Hydrogen cyanide	up to 50 grains/100 cu. ft.

NOTE: Composition of gas stream on a dry basis at sampling location indicated on Figure 2-4; moisture content ranges from 2% to 10%.

Table 2-2

Existing Biological Treatment Plant Loading

	Range	Average
Flow (gpm)[1]	497-877	711.3
Ammonia (lb/day)[2]	345.1-4681.3	1428.2
Cyanide (lb/day)[1]	74.48-172.60	95.1
Phenol (lb/day)[1]	636.22-3576.94	1292.8

	Estimated Contribution to Total Flow
Ammonia Still Effluent	219 gpm
Light Oil Recovery Unit Wastewater	35 gpm
Cyanide Stripper Effluent	50 gpm
Industrial Water as Diluent	400 gpm
	704 gpm

[1]Data from fourth quarter 1988
[2]Data from first quarter 1989; fourth quarter 1988 data for ammonia did not represent typical ammonia concentrations

The effluent from the biological treatment plant is monitored at Monitoring Point 121 prior to discharge to the Patapsco River through Outfall 021. Noncontact cooling water and stormwater runoff from the coal chemicals plant also discharge through Outfall 021. A portion of the sludge from the treatment plant is recycled to the aeration tank and the balance is discharged to the nearby Back River Sewage Treatment Plant, a Baltimore City POTW.

The facility's NPDES discharge permit stipulates that effluent quality at Monitoring Point 121 shall not exceed the following average monthly concentration levels: 2.9 lb/day for phenols; 1,968 lb/day for ammonia nitrogen; and 75.8 lb/day for total cyanide. Table 2-3, which shows the actual monthly average concentrations of these constituents in the plant's discharge, indicates that the facility is presently operating well within its NPDES permit limits. Data from priority pollutant analyses, performed under the conditions of the NPDES permit, are presented in Appendix A. No biomonitoring data have been required or obtained for this monitoring point, but data are available for Outfall 021. These results are discussed in Section 4.3.

2.1.3 Engineering Description of the Proposed Action

The proposed coke oven gas cleaning technology was developed by associated companies of Davy/Still-Otto and is comprised of four steps:

- Secondary Cooling of the Coke Oven Gas
- Hydrogen Sulfide and Ammonia Removal
- Hydrogen Sulfide and Ammonia Recovery
- Ammonia Destruction and Sulfur Recovery

Commercial-scale facilities of each of the above processes and various combinations thereof are operating successfully throughout the world. The secondary gas cooling process has been demonstrated at two installations. Davy/Still-Otto and associated companies have built over 40 plants which remove hydrogen sulfide from gas using ammonia/water solutions, like those to be used at Sparrows Point. The Claus sulfur recovery process, a well-proven technology in cokemaking as well as other industries, is currently in operation at the Sparrows Point Plant. The ammonia destruction process, developed by Firma

Table 2-3

1987 Monthly Average Concentrations in Discharge from Wastewater Treatment Plant (in pounds per day)

	Phenol	Ammonia as Nitrogen	Total Cyanide
Permitted Discharge Rates	2.9*	1,968*	75.8
Actual Discharge Rates			
January	0.5	804	3.6
February	0.9	855	2.3
March	1.0	877	3.8
April	0.8	788	2.1
May	0.4	544	1.9
June	0.7	455	4.2
July	0.6	783	2.7
August	0.8	973	2.9
September	1.4	508	3.5
October	1.5	555	2.2
November	1.1	550	3.3
December	1.5	451	2.3

*BSC has requested a 301(g) variance for these pollutants. EPA has decided to stay the BAT limits pursuant to Section 301(j) of the Clean Water Act. Should the waiver be granted, the alternate limitations would be as shown above. Until the expiration of the stay, BSC must comply with these alternate limits. See discussion in Section 4.3.

Carl Still of West Germany, is currently in use at four installations. Three of the four processes have been successfully combined and demonstrated at Svenstel Stal in Sweden, but the proposed project at Sparrows Point would be the first demonstration of all four process steps in an integrated system.

The proposed demonstration plant is designed to modernize and improve the existing gas handling systems in the A and B Coal Chemicals Plants at Sparrows Point. The demonstration project equipment would replace the existing ammonia removal system, final coolers, hydrogen sulfide removal system, and sulfur recovery system in both plants. The existing wastewater treatment, tar recovery, and one of the three light oil recovery systems will continue to be used to support the new gas treatment system. The proposed project is to be constructed on the site of B Coal Chemicals Plant and will treat the gas currently processed by both the A and B plants. Coke oven gas from A Battery will proceed through primary cooling and exhausters at the A plant, and then will be combined with coke oven gas from the 11 & 12 Battery at the inlet to the tar precipitators. The remainder of A Coal Chemicals Plant will not operate after the new plant comes on line.

The proposed layout of the demonstration facility in the B Coal Chemicals Plant area is shown in Figure 2-5. Whereas the proposed project area consists of approximately 8.6 acres, most of the new equipment installations are limited to five much smaller areas within the general project area. An aerial view of the proposed facility site, showing the current configuration of the B Coal Chemicals Plant, is presented as Figure 2-6.

Figure 2-7 is a simplified process flow diagram showing the unit operations in the proposed gas treatment process after installation of the proposed equipment. The new processes are indicated on the diagram, receiving the coke oven gas as it exits the existing tar precipitators and removing sulfur and ammonia from the gas prior to treatment in the existing light oil scrubbers. Figure 2-8 shows the coke oven gas treatment processing in greater detail, indicating the equipment and process streams. Figure 2-9 is a process flow diagram for the ammonia destruction and sulfur recovery units. Each of the four new processes is discussed in detail below.

Figure 2-5
Layout for Proposed Gas Treatment System

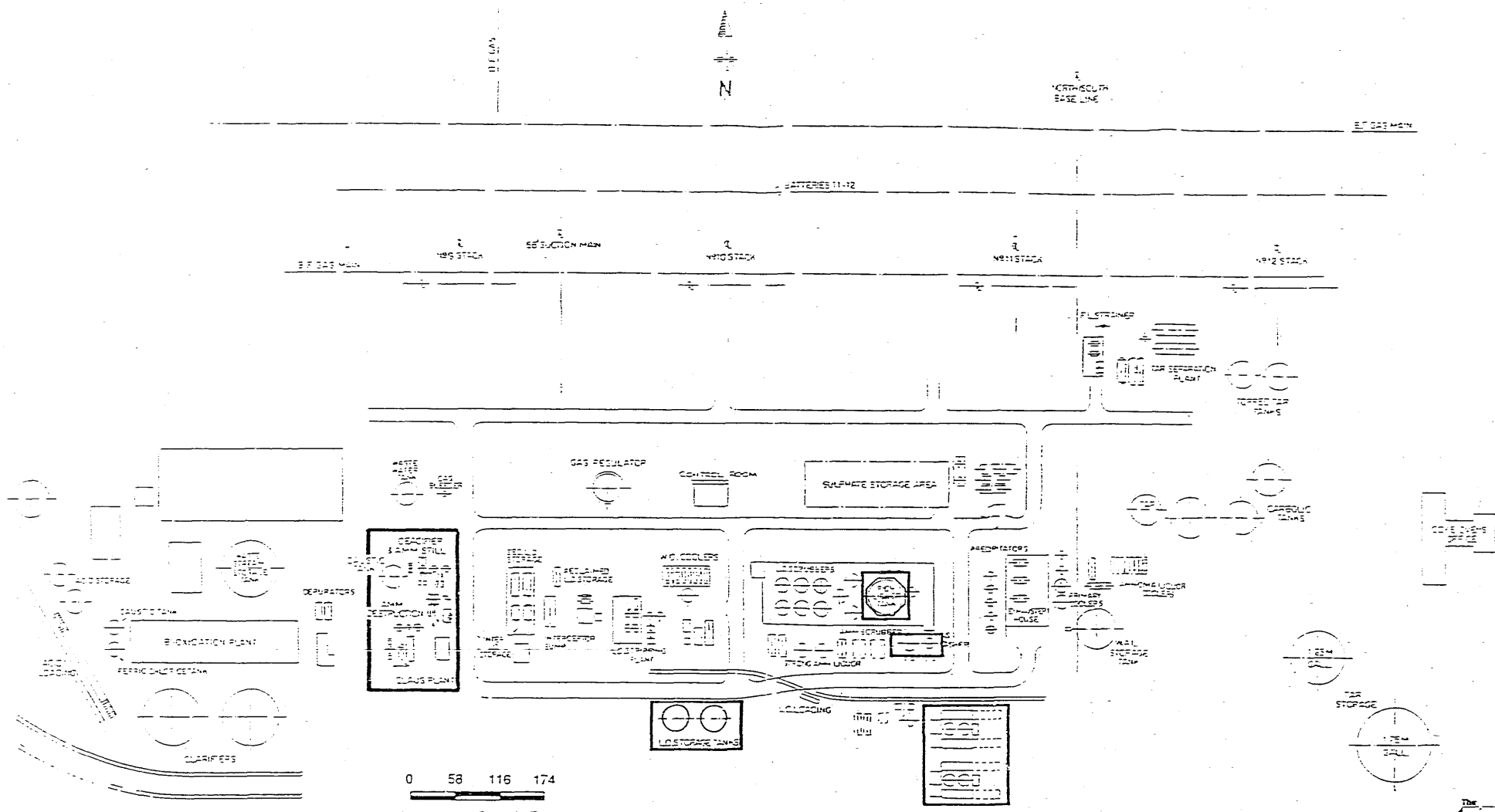

Note: Bold outline indicates new equipment.

Figure 2-6
Aerial View of Project Site

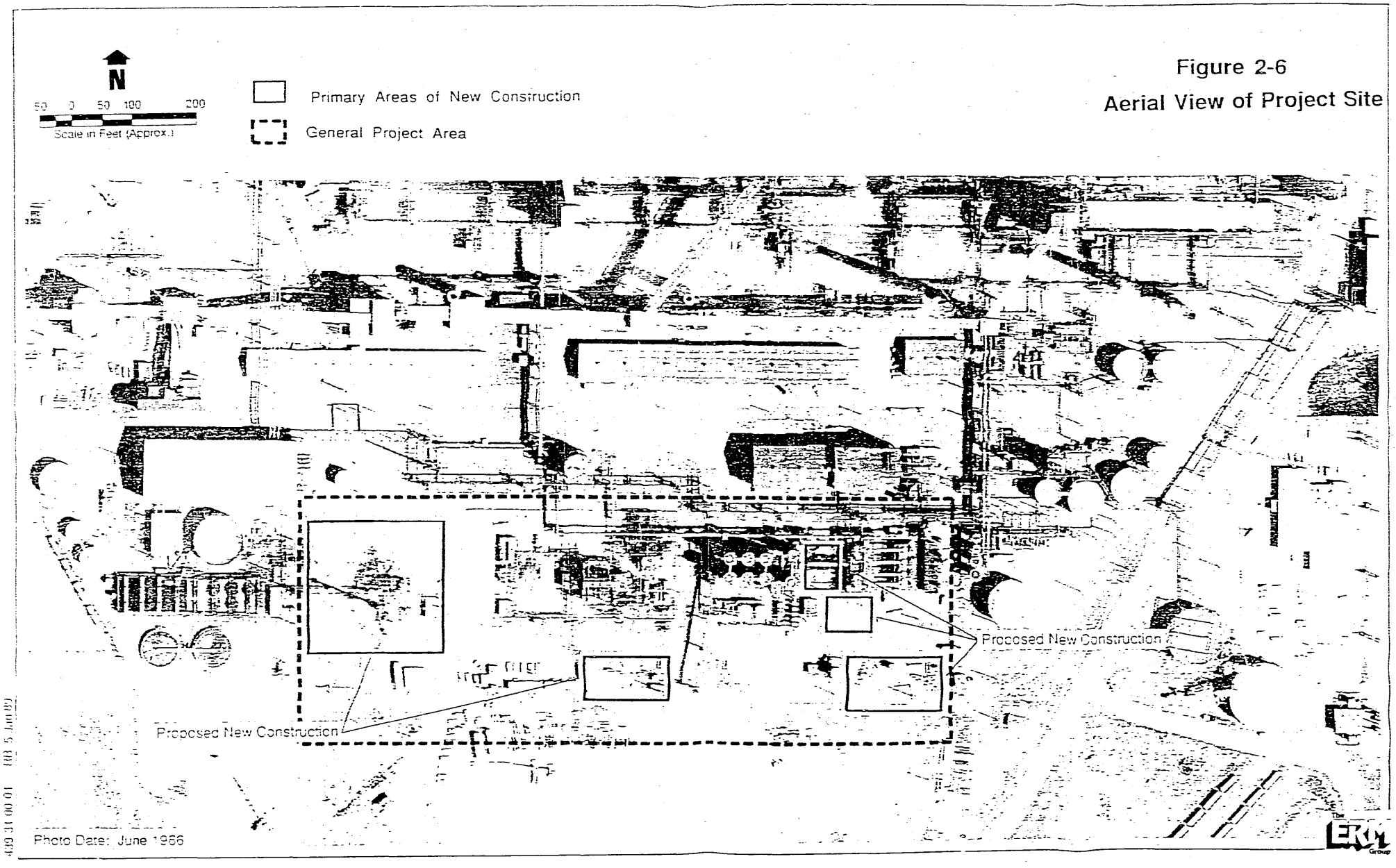

Figure 2-7

Unit Operations in the Proposed Process

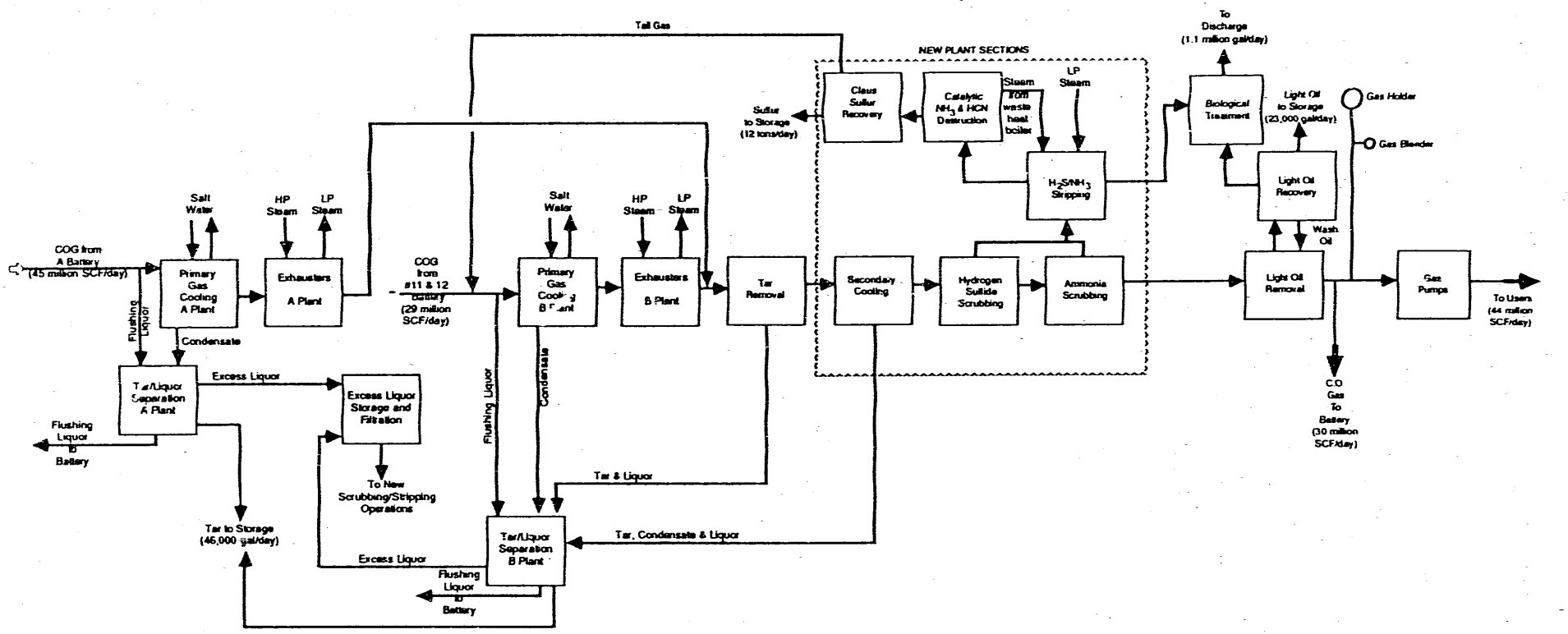

The ERM Group

Figure 2-8

Ammonia/Hydrogen Sulfide Removal and Recovery Units

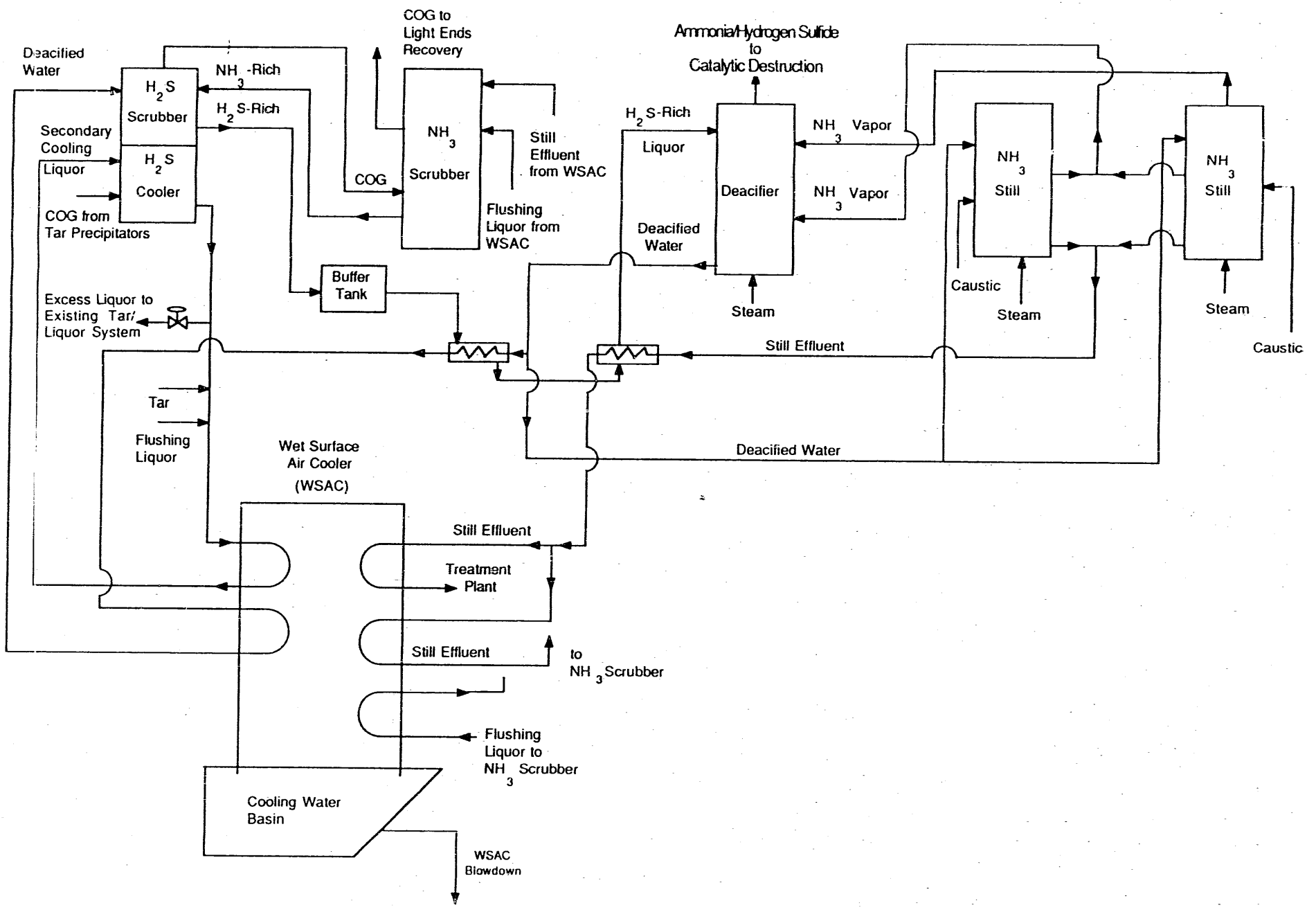

Figure 2-9

Ammonia Destruction and Sulfur Recovery Units

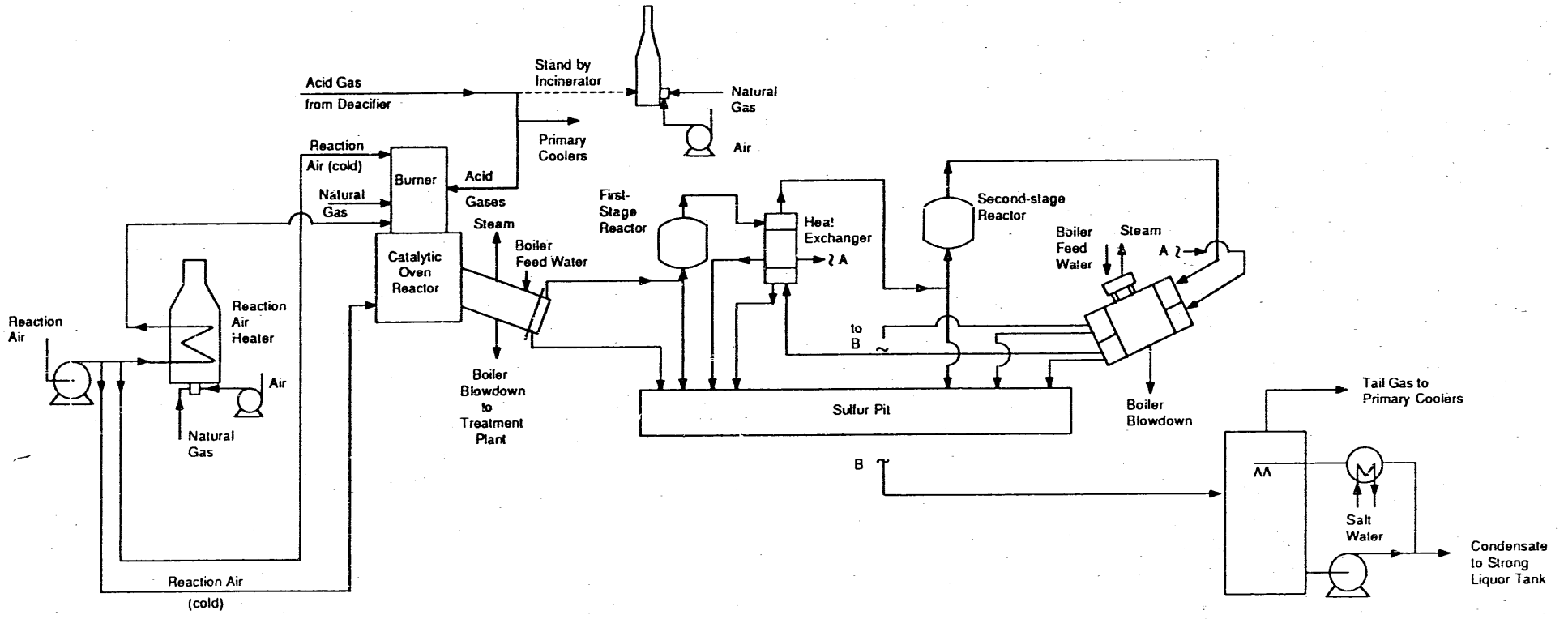

- Secondary Cooling

The first step in the proposed process is secondary cooling. The purpose of the secondary cooling step is to further reduce the temperature of the coke oven gas since the removal of hydrogen sulfide by the ammonia-rich liquor scrubbing process is temperature dependent (i.e., efficiency increases with decreasingtemperature). In order to optimize the absorption of hydrogen sulfide, the coke oven gas is cooled by direct contact with excess flushing liquor containing three to five percent tar (by weight). The tar absorbs the condensing naphthalene to minimize plugging in the tower. A noncontact evaporative type cooler (wet surface air cooler) cools the recirculating flushing liquor without any atmospheric emission from the process. A small stream of the flushing liquor is purged from the secondary cooling system to prevent the buildup of dissolved salts. This blowdown returns to the existing tar and liquor system.

- Hydrogen Sulfide and Ammonia Removal and Recovery

The hydrogen sulfide and ammonia removal process involves treatment of the coke oven gas by gas/liquid contact in a series of columns including a hydrogen sulfide scrubber and an ammonia scrubber.

The cooled gas passes upward to the hydrogen sulfide scrubber from the secondary cooler. In the scrubber, ammonia-rich liquor absorbs hydrogen sulfide from the coke oven gas and converts it to ammonium hydrosulfide (NH_4HS). Cool water from the deacifier is fed to the lower portion of the tower to scrub hydrogen sulfide. Warm water from the deacifier is added to the middle section of the scrubbing tower to create a temperature differential allowing additional ammonia to be released into the gas. This results in a high localized concentration of ammonia ions which react quickly with the hydrogen sulfide. Strong ammonia liquor from the bottom of the ammonia scrubber is fed to the top of the hydrogen sulfide scrubber to remove as much of the residual hydrogen sulfide as possible.

The coke oven gas, scrubbed of most of the hydrogen sulfide, then flows to the ammonia scrubber. Fresh flushing liquor and effluent from the bottom of the ammonia still contact the gas and absorb the ammonia. Following the ammonia scrubber, the clean coke oven gas flows to the Light Ends Recovery Unit of the

existing B Coal Chemicals Plant. The ammonia-rich effluent from the bottom of the tower is returned to the hydrogen sulfide scrubber.

- Hydrogen Sulfide and Ammonia Recovery

The hydrogen sulfide and ammonia recovery process involves treatment of the rich scrubbing liquor from the hydrogen sulfide scrubber tower to strip the dissolved gas from the liquor. The rich liquor from the bottom of the hydrogen sulfide scrubber flows to a liquor buffer tank, through a series of heat exchangers to warm the liquor, and into the deacifier. In the deacifier, hydrogen sulfide, other acid gases, and some ammonia are stripped from the liquor with low-pressure steam. The gases flow to the ammonia destruction and sulfur recovery processes.

A portion of the deacified water returns to the hydrogen sulfide scrubber and the remainder flows to the ammonia stills. Caustic soda is added to the deacified liquor to release the ammonia from the fixed salts, then low-pressure steam is used to strip the free ammonia from the water. The ammonia vapor returns to the deacifier where it is combined with the acid gases. The stripped water from the bottom of the ammonia still is low in ammonia and hydrogen sulfide. Part of this effluent flows to the ammonia scrubber and approximately 200 gallons per minute (gpm) flows to the existing biological treatment facility.

- Ammonia Destruction and Sulfur Recovery

The offgas from the deacifier and the ammonia still are treated in the ammonia destruction and sulfur recovery process.

In the ammonia destruction process, ammonia, hydrogen cyanide and organics are oxidized to form carbon monoxide, carbon dioxide, nitrogen, hydrogen, and water promoted by a nickel catalyst at 2,000°F. The gas is then mixed proportionally with air to convert one third of the hydrogen sulfide to sulfur dioxide before it flows to the Claus sulfur recovery plant.

In the Claus plant, the gas enters the first of two reactors. In the first reactor, the hydrogen sulfide reacts with sulfur dioxide in the presence of an alumina catalyst

to produce elemental sulfur. The gas leaving the reactor is partially cooled to condense the pure sulfur which is collected in the existing sulfur pit. The cooled gas is then reheated and passed through a second identical reactor in which the remaining hydrogen sulfide and sulfur dioxide react to produce additional elemental sulfur. The gas is again cooled to condense the sulfur. Approximately 1,000 pounds per hour of elemental sulfur is expected to be recovered. The hydrogen sulfide-lean gas, known as tail gas, is recycled to the coke oven gas stream ahead of the plant exhausters. The flow of tail gas is expected to be 3.25 million SCF per day, or approximately four to five percent of the coke oven gas flow rate.

2.1.3.1 Description of Project Phases

The demonstration project is estimated to take 49 months to complete, following the start date of the project (1 April 1989). Figure 2-10 illustrates the scheduled timeline for the project. The work will be divided into three phases: Design and Permitting; Procurement, Construction, and Startup; and Demonstration Plant Operation. After the 49-month demonstration project, the new process will continue to be operated as part of the ongoing commercial operation.

Phase I, Design and Permitting, is scheduled to be completed three months after the project start date. Under Phase II, construction planning is begun during the design process and will be completed 12 months after the start date. Actual construction of the demonstration plant will begin at that point, and will continue for about 23 months thereafter.

Phase III, Plant Evaluation and Operation, will consist of a 12-month period of operating the plant over a range of conditions to optimize the hydrogen sulfide removal efficiency. Circulation rates and steam requirements will be varied at different coke oven gas temperatures, and the hydrogen sulfide removal efficiency and utility requirements will be measured under each set of conditions. Routine sampling and analysis of the coke oven gas and the ammonia still effluent will be performed. This 12-month evaluation period will be followed by a 2-month plant reassessment process, during which BSC will select conditions to be used for commercial operation of the system.

Figure 2-10

Project Implementation Schedule

BETHLEHEM STEEL CORP / DOE

CLEAN COAL PROJECT

SPARROWS POINT, MD.

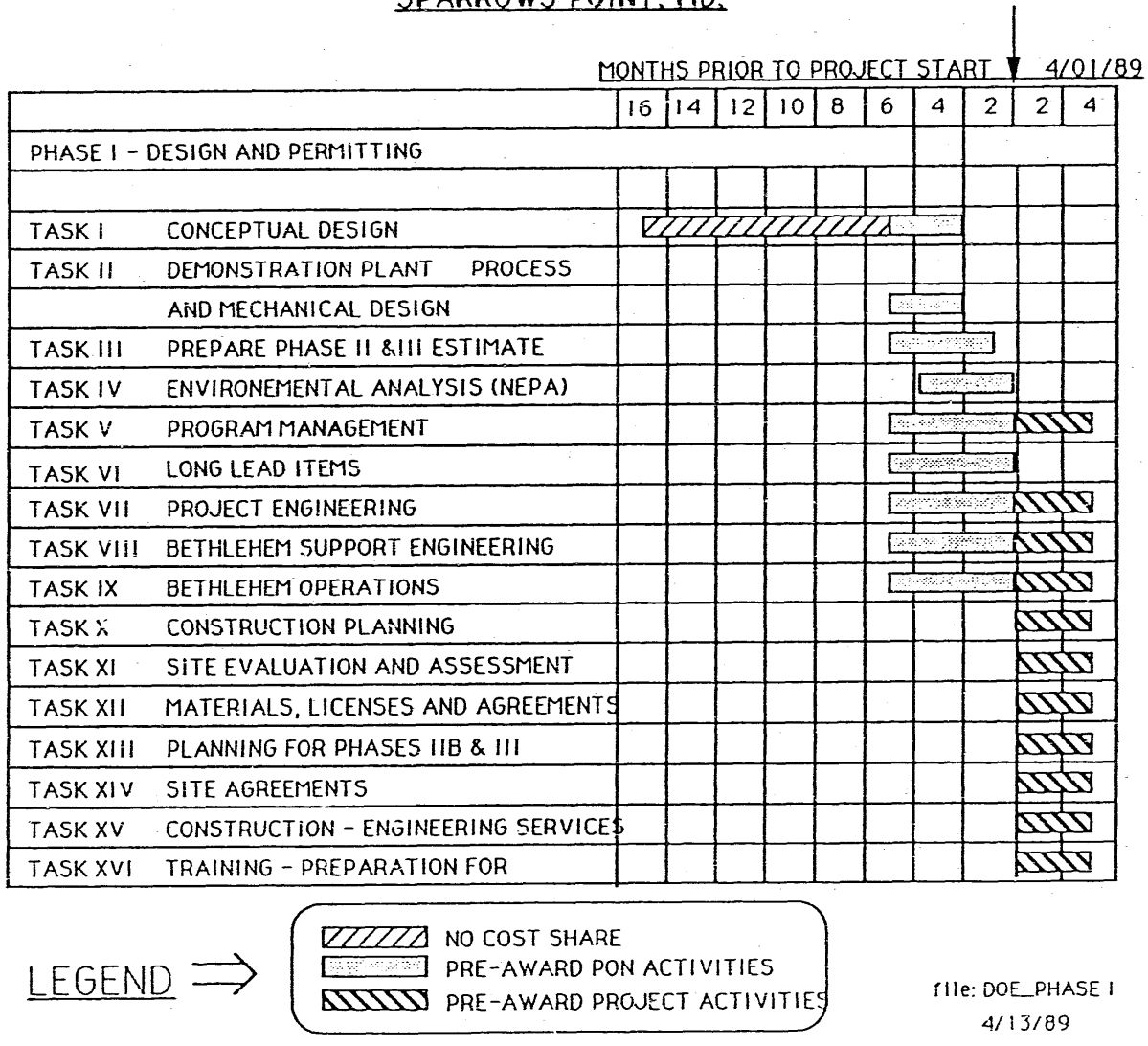

file: DOE_PHASE I
4/13/89

Figure 2-10 (continued)

BETHLEHEM STEEL CORP / DOE

CLEAN COAL PROJECT

SPARROWS POINT, MD.

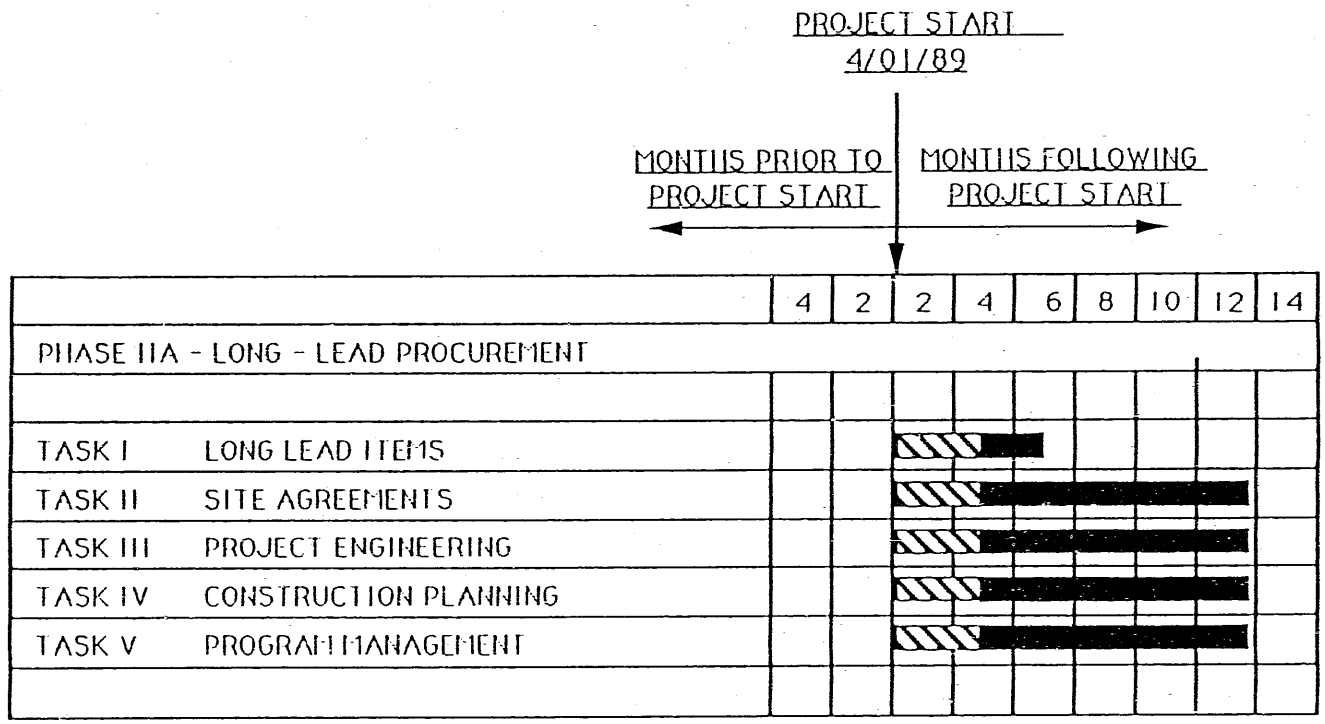

LEGEND

PRE-AWARD PROJECT ACTIVITIES

REQUEST COST SHARE

file: DOE_PHASE IIA

4/13/89

Figure 2-10 (continued)

BETHLEHEM STEEL CORP / DOE
CLEAN COAL PROJECT
SPARROWS POINT, MD.

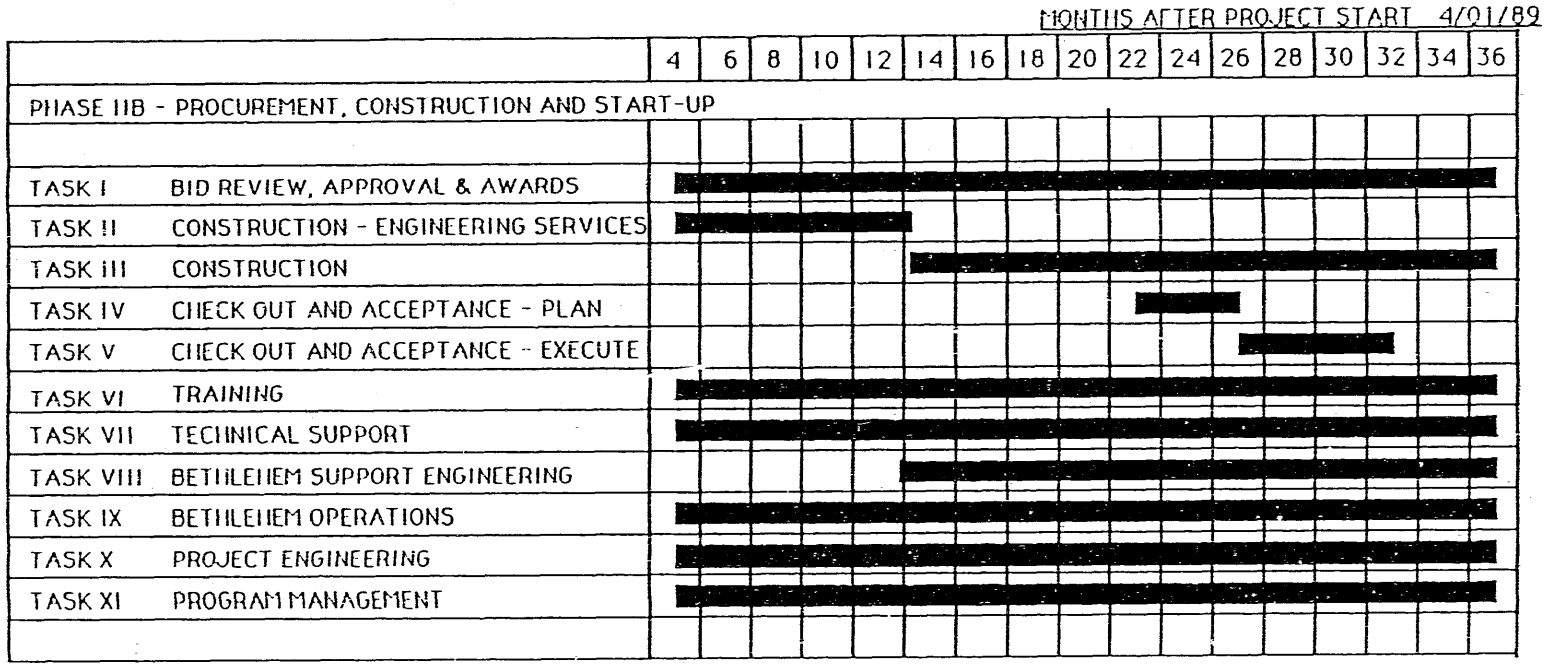

LEGEND:

REQUEST COST SHARE

File: DOE_PHASE IIB
4/13/89

Figure 2-10 (continued)

BETHLEHEM STEEL CORP / DOE

CLEAN COAL PROJECT

SPARROWS POINT, MD.

MONTHS FOLLOWING PROJECT START 4/01/89

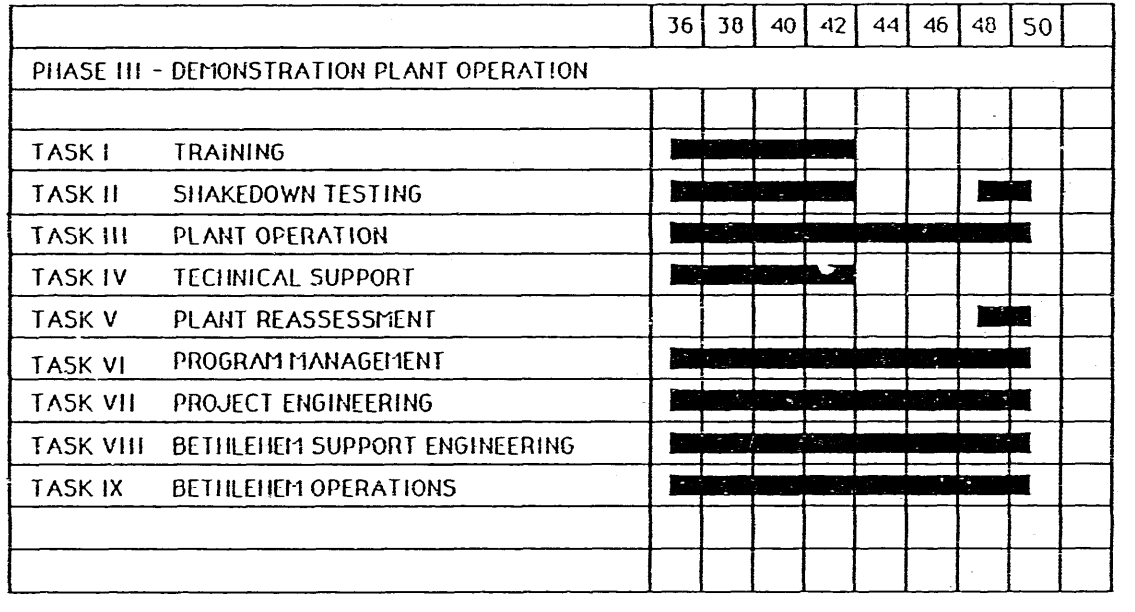

LEGEND

REQUEST COST SHARE

file DOE_PHASE III
4/13/89

BSC will continue to operate the plant commercially after completion of the demonstration. It is anticipated that the plant will operate for approximately 30 years.

2.1.3.2 Description of Installation Activities

There will be no significant downtime in the operation of the existing plant during the construction and startup of the new system. The new equipment can be installed while the existing plant is in operation, and tie-ins to the existing coke oven gas mains can be done by hot-tapping. Figure 2-11 shows the utilization of existing equipment in the proposed gas treatment system. Tie-ins to utility lines can be done by hot-tapping or minor shutdowns. Debugging, purging, and startup of the liquor circulation streams can be carried out prior to putting the new system on line. When the system is ready, the isolation valves to the existing gas mains can be opened, and the coke oven gas can be passed through the new hydrogen sulfide and ammonia scrubbers.

2.1.3.3 Project Source Terms

This section characterizes all of the source terms of the proposed coke oven gas cleaning demonstration plant. Source terms can be divided into the categories of resource requirements and project discharges.

- Resource Requirements

The resource requirements for the proposed demonstration project are land, water, energy, and materials. These requirements are summarized in Table 2-4, which also includes a comparison with raw material usage at the existing plant. BSC states that it has coal reserves sufficient for decades and has the ability to mine and deliver sufficient coal to the Sparrows Point Plant to maintain maximum coke production at all times.

There is no anticipated requirement for land outside the existing Sparrows Point Plant boundaries or beyond the current confines of the B Coal Chemicals Plant. Because the proposed modification involves a retrofit of new equipment into an existing process, no additional utility or other infrastructure is needed. The area

Figure 2-11
New and Existing Gas Treatment Equipment

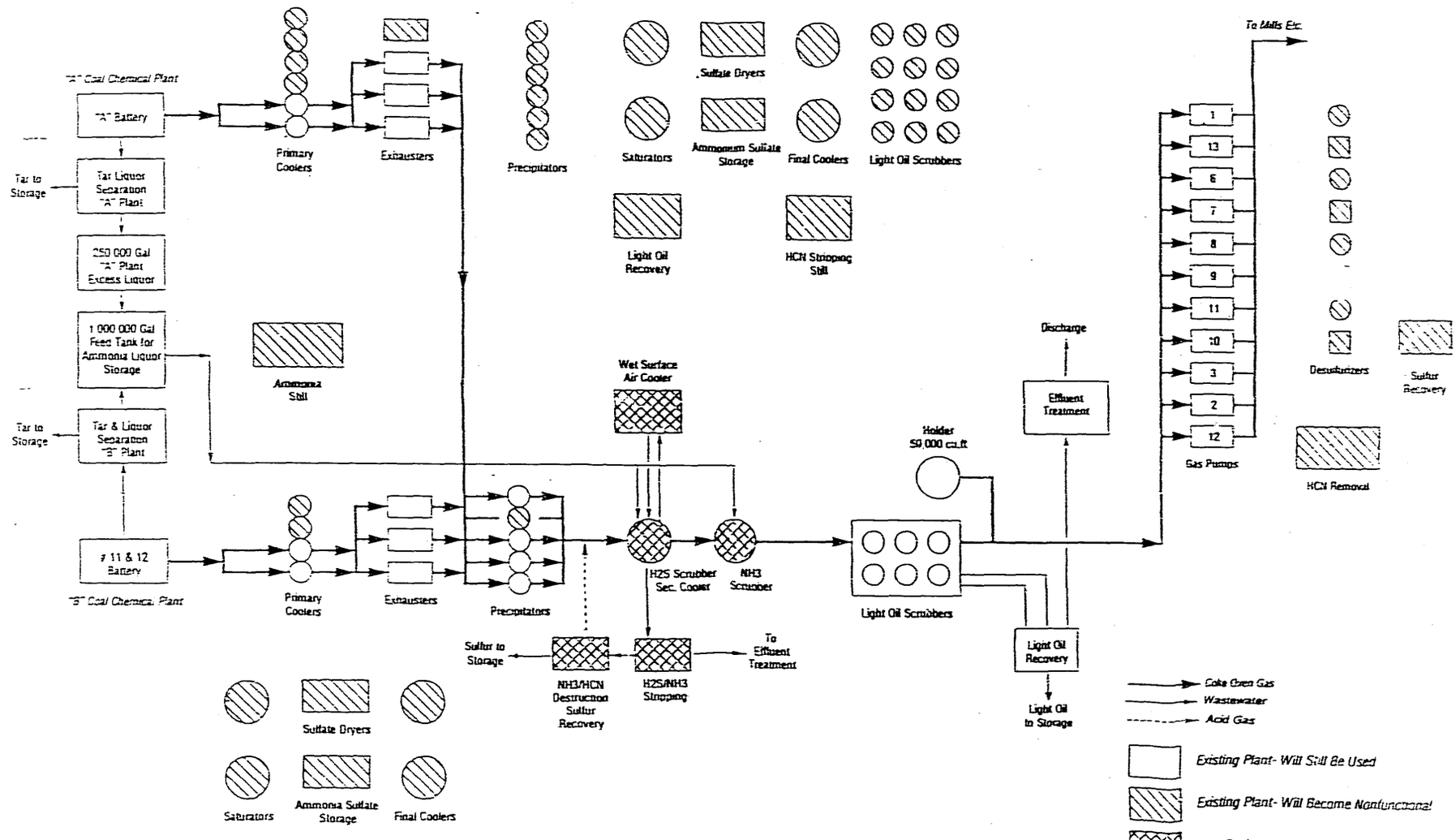

NOTE. Drawing not to scale

Table 2-4

Resource Requirements For Existing and Proposed Coke Oven Gas Cleaning Process

	Existing Plant	Proposed Plant
Land	8.6 acres (B Plant only)	No change
Potable Water	20,800 gallons per day	32,000 gallons per day
Industrial Water	580,000 gallons per day	910,000 gallons per day
Patapsco River Water	28.6 million gallons per day	21.6 million gallons per day
Electricity	121,000 kwhr/day	106,000 kwhr/day
Steam	58,158 pounds per hour	No change
Natural Gas	151 million Btu per day	77 million Btu per day
Alkali	6.2 tons/day of lime	3.9 tons/day of sodium hydroxide

NOTE: Average daily values based on continuous operation.

of the coal chemicals plant has been examined and preliminary layouts show that there is sufficient space for the new equipment and required construction activities. The approximate plot areas required for the new equipment are as follows: hydrogen sulfide and ammonia scrubbers 65' x 35'; wet surface air cooling system 60' x 90'; hydrogen sulfide and ammonia recovery system plus ammonia destruction and Claus plant 60' x 80'.

Potable water from the City of Baltimore will be required as makeup to the waste heat boilers. The average requirement for city water will be 950,400 gallons per month, or an average of about 32,000 gallons per day. This is an increase of approximately 50 percent over the existing boiler makeup requirement. By comparison, the entire steelworks uses about 14 million gallons of city water per day. Therefore, the potable water requirement for the proposed facility represents only 0.2% of the total potable water usage at the steelworks.

Approximately 330,000 gallons per day of industrial water (treated effluent from the Back River Sewage Treatment Plant) will be used in the proposed process as makeup for the wet surface air cooler. Of this, approximately 170,000 gallons per day will be lost to evaporation and 160,000 gallons per day will be discharged through outfall 021. Currently, about 580,000 gallons per day of industrial water is mixed with the combined effluent from the ammonia stills, the benzol plant, and the cyanide stripper to reduce the strength of the wastewater prior to biological treatment. The proposed system will result in a net increase of 330,000 gallons per day in the plant's industrial water requirement. The total plant currently uses approximately 100 million gallons of industrial water per day, so the proposed increase at the coal chemicals plant would increase the total industrial water requirement at Sparrows Point by less than 0.4%.

In addition, Patapsco River water for cooling the tail gases from the sulfur recovery plant will amount to about 312,000 gallons per day. This noncontact cooling water requirement will be supplied by the existing once-through system for the plant and virtually all of the water will therefore be returned directly to the river. Cooling water is currently used in the final cooling and cyanide and ammonia removal processes, which will be eliminated. This will result in a net

decrease in cooling water requirements for the plant from 28.6 million to 21.6 million gallons per day. All water is available in sufficient quantities to serve the proposed project.

The process will require 8,200 kilowatt hours per day in electrical power. The ammonia saturators, final coolers, ammonia still, and cyanide stripper, all of which will be replaced by the new process, require 23,200 kilowatt hours per day. As a result of this substitution, the overall daily electricity consumption of the coal chemicals plant will decrease by 12 percent, from 121,000 kilowatt hours to 106,000 kilowatt hours.

The exhausters require 58,158 pounds of high-pressure steam per hour, and generate low-pressure steam for use throughout the A and B Coal Chemicals Plants. The amount of steam currently generated is sufficient to meet the needs of the proposed process.

The system will require 8.5 tons per day of caustic soda (46% solution), as well as an undetermined amount of dosing chemicals for boiler makeup and circulating cooling towers (scale inhibitor, rust inhibitor, and sodium chloride, sulfite, and phosphate). The requirement for these chemicals is dependent upon the actual analysis of the makeup water used. Under normal conditions, natural gas may be needed for heating at a maximum level of 77 million Btu per day. The existing desulfurizers and Claus sulfur recovery unit consume an average of 151 million Btu/day of natural gas. Therefore, there will be a net decrease in the natural gas requirement.

Additional labor will be required during the construction phase only. Table 2-5 presents the expected number of man-hours that will be needed for construction in each trade listed. The total labor requirement for actual construction is estimated to be 202,000 man-hours. This project represents about one fifth of the Sparrows Point Plant's capital improvements commitments for 1989, $40 million out of a total budget of $190 million for the year. In 1986 through 1988, capital commitments totaled about $44 million, $33 million, and $69 million, respectively. A sufficient work force is readily available to support projects of this size.

Table 2-5

Projected Labor Requirements for Construction

Trade	Man-hours
Ironworkers	22,000
Electricians	48,000
Pipefitters	69,000
Carpenters	14,000
Laborers	12,000
Millwrights	5,000
Pile Drivers	9,000
Masons	4,000
Painters	5,000
Insulators	10,000
Operating Engineers	4,000
TOTAL	**202,000**

- Project Discharges

Air Emissions

During normal operation of the new gas cleaning process, air emissions will result from combustion of the clean coke oven gas throughout the plant in process units and boilers. These emissions will consist primarily of sulfur dioxide and nitrogen oxides. Nitrogen oxides emissions are expected to remain at 0.1 pound per million Btu, since the proposed equipment will not alter the heating value or the ammonia content of the product gas.

As a result of this new process, the emissions of sulfur dioxide resulting from burning coke oven gas are expected to be approximately 2,600 tons per year. This rate is based on the projected sulfur concentration in the coke oven gas of 70 grains of hydrogen sulfide per 100 SCF, a design gas flow rate of 74 million SCF/day, and continuous operation. This represents a net reduction of approximately 4,600 tons per year of sulfur dioxide from 1986 emission rates. The 1986 emission rates were based on continuous operation of all coke oven gas burning equipment at the plant and take into account the difference in emissions between sources burning raw and clean coke oven gas. For clean coke oven gas, the desulfurization system was assumed to operate continuously. These emission rates were provided by Sparrows Point to Maryland Department of the Environment for its use in developing the statewide emissions inventory.

At a typical steel plant, significant amounts of volatile organic compounds (VOCs) are emitted by the final coolers, which are replaced by this new process. Typically the final cooling process involves direct contact between the coke oven gas and water, followed by cooling the water in a cooling tower. EPA estimates the benzene emissions from this type of final cooling to be 0.75 pound per ton of coke produced, or over one million pounds per year from an average sized plant. However, the final cooling system at Sparrows Point is a wash oil cooler, which does not emit a significant amount of VOCs because the wash oil is cooled indirectly. Since the wash oil final cooler process essentially eliminates VOC emissions, the replacement of the final coolers in the new process layout will only slightly reduce VOC emissions at Sparrows Point. However, installation of the new system may result in a significant decrease in fugitive VOC emissions at

Sparrows Point due to the replacement of old leaking equipment with new equipment. The new equipment will be designed to comply with the proposed emissions standard for benzene from coal chemicals plants (53 FR 28496), which may not have been achievable with the existing equipment. Installation of new equipment should also reduce the potential for odorous emissions.

During startup and shutdown, the hydrogen sulfide and ammonia removal and recovery units will not be as efficient as during normal operation and will result in higher concentrations of these compounds in the coke oven gas. Therefore, the sulfur dioxide and nitrogen oxide emissions from burning the coke oven gas will also be increased. The hydrogen sulfide and ammonia removal and recovery processes are not expected to require scheduled outages; any outage would be an unplanned event. The design of the gas cleaning system includes a redundant ammonia stripping column. In the event either the hydrogen sulfide scrubber or ammonia scrubbing tower was shut down and restarted, equilibrium would be reached in a few hours. Therefore these emissions are not expected to be significant.

During a shutdown of the Claus plant, sulfur will not be removed from the acid gases and the gas will be burned in the standby incinerator. The total estimated sulfur dioxide emission rate from the incinerator and the coke oven gas under these conditions is 2,726 pounds per hour. These emissions would be equivalent to current emissions when the existing Claus plant is not operating. The existing Claus plant has less than 80 percent availability as a result of two weeks of scheduled downtime for maintenance as well as unscheduled downtime due to upsets and unscheduled maintenance. The new equipment in the replacement Claus plant will require only scheduled maintenance, resulting in two weeks of downtime annually (about 336 hours), allowing 8,424 available hours for use per year, or 96 percent availability. In addition, the existing plant only removes the hydrogen sulfide from two thirds of the coke oven gas stream; the new plant will treat the entire gas stream.

Wastewater

Wastewaters will be produced during normal operation of the proposed project. They will contain primarily ammonia, hydrogen sulfide, hydrogen cyanide, and phenols.

During normal operating conditions, the proposed project will discharge approximately 200 gpm to the existing biological treatment plant as wastewater from the hydrogen sulfide and ammonia removal and recovery system. The approximate composition of this wastewater is 20 parts per million (ppm) hydrogen sulfide, 150 ppm ammonia, 200 ppm carbon dioxide, 10 ppm hydrogen cyanide, and 350 ppm phenols, based on operating data from other plants designed by Davy/Still-Otto (Platts 1989). This effluent rate and composition is similar to that of the existing ammonia recovery process. The existing light oil recovery plant waste contributes an additional 35 gpm of wastewater to this flow.

Blowdown from the boilers and the wet surface air cooler will contribute approximately 110 gpm of wastewater containing phosphates and chlorides. This wastewater will replace a fraction of the industrial water (approximately 400 gpm) currently used to dilute the process wastes prior to biological treatment.

During startup, removal and recovery of hydrogen sulfide and ammonia will not be as efficient. Lower blowdown flow rates will increase the concentrations in the absorbing liquids to the level necessary for efficient removal. When any of the towers are shut down, blowdown to the existing treatment plant will need to be adjusted to maintain the liquid balance in the remaining towers. However, no change in effluent quality is expected.

Table 2-6 provides a comparison of current and proposed flows and wastewater loadings. Since there is no increase in loading or significant change in the composition of wastewater due to the proposed project, the existing treatment plant is expected to be capable of treating this wastewater to meet all applicable permit levels. As indicated in Discharge Monitoring Reports submitted to the State, the treatment plant is currently meeting all discharge limits identified in the NPDES permit.

Table 2-6

Comparison of Existing and Proposed Loading to the Biological Treatment Plant (in pounds per day)

Constituent	Average Existing	Average Proposed	Change
Ammonia	1,428	427	(1,001)
Cyanide	95	28	(67)
Phenol	1,293	996	(297)

Component of Total Flow	Existing Process	Proposed Process
Ammonia Still Effluent	219 gpm	202 gpm
Light Oil Recovery Unit Wastewater	35 gpm	35 gpm
Cyanide Stripper	50 gpm	--
Industrial Water as Diluent	400 gpm	400 gpm
	704 gpm	637 gpm

Solid Wastes

The proposed project will not generate solid waste on a routine basis. The nickel catalyst (approximately 320 cubic feet or 5 tons) and alumina catalyst (approximately 650 cubic feet or 10 tons) in the ammonia destruction and sulfur recovery units will eventually need to be replaced, once every five to eight years. At that time, the nickel catalyst will be returned to a vendor who will regenerate the catalyst. If regeneration of the catalyst is not feasible, it will be properly managed as a potential hazardous waste. The Sparrows Point Plant has in place a hazardous waste management program with procedures for handling wastes generated throughout the plant. The spent alumina catalyst from the existing Claus plant has been tested and found to be nonhazardous; it is disposed of in an on-site landfill. The current management practices will be continued for the alumina catalyst in the new system.

The characteristics of the sludge from the biological treatment plant will not change as a result of the new process, since contaminant loadings to the treatment plant will not increase. Furthermore, the composition of the coke oven gas itself, which is the ultimate source of the contaminants in the sludge, will not change. As is the current practice, a portion of the sludge will be recycled to the aeration tank and the balance discharged to the Back River Sewage Treatment Plant.

2.1.3.4 Potential EHSS Receptors

A number of environmental features could potentially be affected by the proposed action. These include air quality, surface water quality, ground water quality, land use, labor force, and energy resources. Section 3 focuses on characterizing the existing environment with respect to these probable receptors. Section 4 evaluates the probable impact of the proposed project on these receptors.

2.2 Alternatives to the Proposed Action

2.2.1 The No Action Alternative

The Sparrows Point Plant produces 1.4 million tons of coke per year. This production gives rise to about 400,000 pounds of coke oven gas annually. BSC estimates that burning that amount of gas with no sulfur controls at all would produce 14,300 tons of sulfur dioxide per year. Under the current control technology used at the plant, actual emissions in 1986 were reported as 7,200 tons per year. The estimated post-project emissions are 2,600 tons per year, based on continuous production of 74 million SCF/day at a concentration of 70 grains H_2S/100 SCF. There is expected to be no change in nitrogen oxide emissions due to the proposed project.

The no action alternative is not viable. BSC is under a Consent Order to reduce visible emissions from the Sparrows Point Plant. Eight operations or sources of air emissions were identified in the Consent Order as requiring modifications to comply with COMAR 26.11.10. BSC has proposed the coke oven gas cleaning project as a means to fulfill requirements of the second area identified in the order, the "Coke Oven Batteries - Combustion Stacks and Gas Desulfurization" area. The Consent Order also covers the following areas: the basic oxygen furnace (BOF) shop, by-product slot type coke oven batteries, Number 4 open hearth shop, "L" blast furnace baghouse, BOF reladling baghouse, BOF reladling operations, and miscellaneous installations including the sinter plant cooler, Penwood boiler, blooming mill scarfer, and blooming mill soaking pit furnaces Numbers 9 and 20.

The proposed gas cleaning process is designed to reduce visible emissions from the coke oven batteries by desulfurizing the underfire gas burned in the batteries, to eliminate the visible white sulfate plume currently generated. If this project is not completed, the facility will be forced to install alternative controls.

Removal of ammonia from the coke oven gas is required to prevent downstream corrosion. At the Sparrows Point Plant, as at the majority of U.S. cokemaking facilities, the ammonia is removed from the gas by contacting it with sulfuric acid to make a low-grade ammonium sulfate. The existing ammonia removal process

is no longer cost-effective because the ammonium sulfate produced is very difficult to sell and the acid normally costs more than the salt generated.

Another disadvantage of the no action alternative is the use of sulfuric acid, which increases the potential for a hazardous material spill in the plant.

2.2.2 Alternative Technologies

Common technologies for removing hydrogen sulfide from coke oven gas can be divided into two categories: absorption/desorption processes and liquid oxidation processes. The basic characteristics of each process category are described below.

Both the proposed system and the process currently used at the Sparrows Point Plant are of the absorption/desorption type. In general, acid gases are absorbed into a recirculating alkaline solution to remove them from the coke oven gas, and the solution is then stripped of the acid gases, from which the sulfur is recovered in the form of elemental sulfur or sulfuric acid. Individual processes differ primarily in the composition of their absorbent and the conditions under which the acid gases are stripped from it. The existing desulfurization method at the plant uses a sodium carbonate solution and two-stage steam stripping. Another commercially available absorption/desorption process uses a monoethanolamine (MEA) solution, which must be filtered as it is recirculated to remove degradation products. The MEA process produces a sludge waste from this filtration, creating a waste disposal need that is avoided in the system proposed for Sparrows Point. Other advantages of the proposed system include its use of ammonia liquor produced at the plant as an absorption agent, eliminating the need to purchase an additional absorbing solution; and the destruction of hydrogen cyanide along with ammonia in the catalytic oven, eliminating the need to remove and treat it separately. It also will require less intensive maintenance than the existing carbonate absorption process.

In liquid oxidation, the other type of commercially available desulfurization process, hydrogen sulfide is catalytically converted to sulfur in the scrubbing solution, without secondary recovery equipment such as a Claus plant. In the Stretford process, a particular liquid oxidation method, coke oven gas must first be contacted with an ammonium polysulfide solution that reacts with hydrogen

cyanide, removing it from the gas stream. This is necessary to minimize the formation of toxic by-products during the oxidation step. Then the gas is washed with a mixture of alkali and catalytic reagents. The hydrogen sulfide is oxidized in this solution to elemental sulfur, which is separated out and purified for shipment. Other liquid oxidation processes use different reagents and use different methods to deal with the presence of hydrogen cyanide in the gas.

Most of these liquid oxidation processes produce effluents that contain thiosulfate and thiocyanate, which must be incinerated or otherwise treated. They also require the use of expensive catalysts and reagents. Catalysts are regenerated by air oxidation and recycled, but some amount of blowdown and replacement is necessary. A drawback to this type of system is that upstream plant upsets can contaminate the desulfurizing medium, requiring total discharge of absorbent and charging of fresh absorbent before operations can resume. By contrast, the proposed desulfurization process utilizes the ammonia already present in the untreated coke oven gas to produce the absorbents. This points to another advantage of the proposed system over liquid oxidation methods, in that desulfurization is combined with removal of the ammonia in the gas. Thus the costly process of removing ammonia by formation of ammonium sulfate will be eliminated. No chemicals or catalysts need be added to the desulfurization scrubbing liquors and there are not attendant waste disposal problems.

2.2.3 Alternative Sites

The existing A Coal Chemicals Plant at Sparrows Point was also considered as a possible location for the new facility. However, the other portions of the existing coal chemicals plant required to treat the coke oven gas were in better condition at the B plant. In addition, the layout of the B plant was better suited to the installation of the new facility.

SECTION 3

EXISTING ENVIRONMENT

This section describes the existing environmental conditions at the proposed project site and in the area of the Sparrows Point Plant.

3.1 Atmospheric Resources

The climate in the project area is characterized by warm, humid summers and fairly cold winters. Summer weather is under the influence of the Bermuda High, a large semipermanent high pressure system that brings warm humid air from the south. Winter weather is characterized by the frequent passage of polar air masses originating over northern Canada. Data from Baltimore-Washington International Airport (BWI) collected over 31 years indicate that precipitation averages 40.5 inches per year in the area. Precipitation is relatively evenly distributed over the year, ranging from 2.8 inches per month in February to 4.2 inches in August. Mean monthly minimum temperatures at BWI are lowest in January at 24.1°F. Monthly maximum temperatures are highest at 87.0°F in July. Winds are predominantly from the west at an average of 9.3 miles per hour; highest wind speeds are generally in the winter and spring. Figure 3-1 illustrates the distribution of hourly wind direction and average wind speed at BWI.

The project area is located in the Metropolitan Baltimore Air Quality Control Region (also known as Area III) as designated by the Maryland Department of the Environment (MDE), Air Management Administration (AMA). Maryland AMA has monitored levels of criteria pollutants (pollutants for which National Ambient Air Quality Standards (NAAQS) have been established) and several noncriteria pollutants since the early 1970s. Table 3-1 lists current primary and secondary NAAQS.

Statewide monitoring indicates that all of Maryland is in compliance with air quality standards for sulfur dioxide, nitrogen dioxide, and lead. Area III, including the project area, and the Maryland portions of Area IV (Washington, D.C. metropolitan area) are not in compliance with the ozone standard. Portions

Figure 3-1
Distribution of Hourly Wind Direction (top) and Average Wind Speed for Wind Direction (bottom) at BWI, 1951-1980

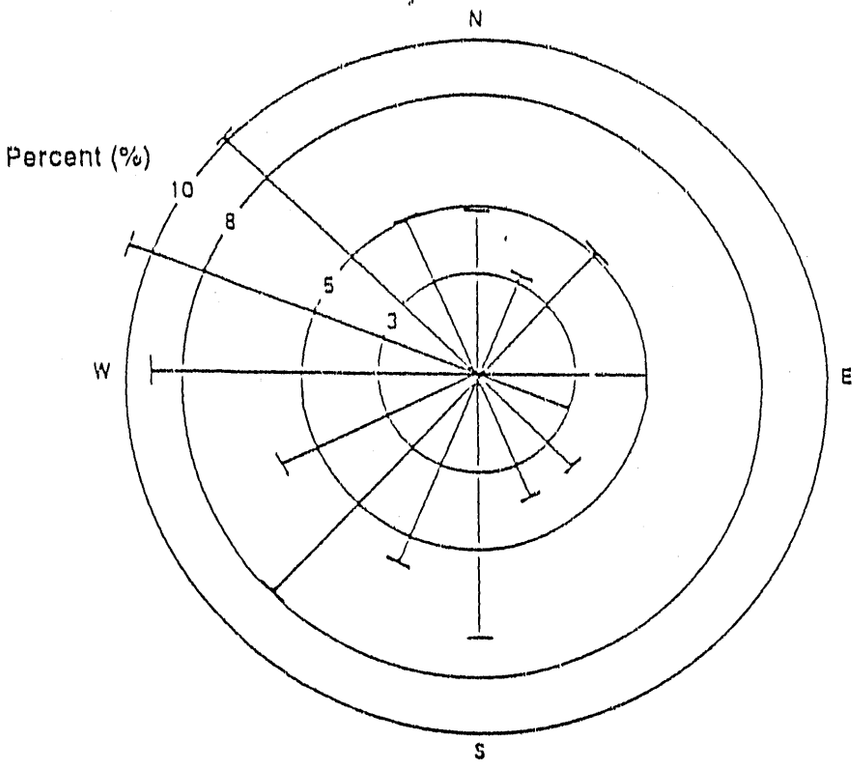

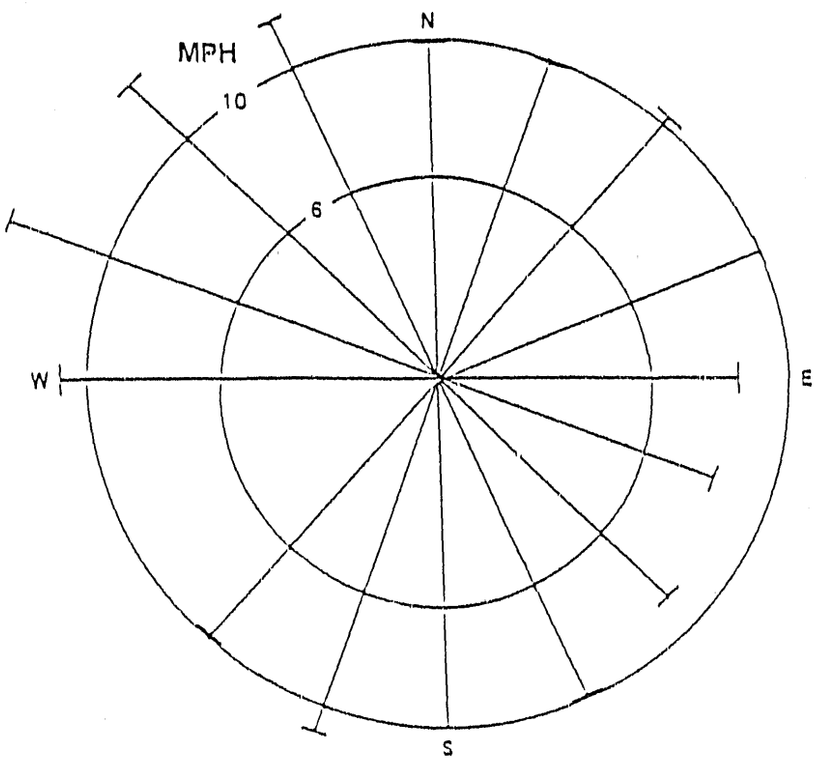

Adapted from: Ecological Analysts (1984)

Table 3-1
Ambient Air Quality Standards

Pollutant	Averaging Period	Standards (ug/m³) Primary (a)	Standards (ug/m³) Secondary (a)
PM_{10}	Annual (Arithmetic mean)	50	50
	24-hour (b)	150	150
Sulfur Dioxide	Annual (Arithmetic mean)	80	—
	24-hour (c)	365	—
	3-hour (c)	—	1,300
Nitrogen Dioxide	Annual (Arithmetic mean)	100	100
Ozone	1-hour (d)	235	235
Carbon Monoxide	8-hour (c)	10,000	10,000
	1-hour (c)	40,000	40,000
Lead	Calendar Quarter	1.5	1.5
Gaseous Fluorides (e)	24-hour	1.2	1.2
	72-hour	0.4	0.4

Source: 40 CFR 50; 40 CFR 52 Subpart V

(a) Primary standards are set to protect human health; secondary standards are set to protect human welfare (e.g., livestock, vegetation, economic value of objects).
(b) Not to be exceeded more than three days in three years when data are adjusted to an every-day sampling schedule.
(c) Not to be exceeded more than once per year.
(d) Expected number of days in which one or more hourly ozone concentrations exceed this value must be less than or equal to 1.
(e) Applies to Maryland only.

of these two areas are also not in compliance with carbon monoxide standards; however, the Sparrows Point area is in compliance with the carbon monoxide standard. Parts of the Baltimore industrial area had been in violation of the old secondary total suspended particulate (TSP) standards. However, the NAAQS for TSP was eliminated on 31 July 1987 by the U.S. EPA and was replaced by a standard for particulate matter less than 10 microns in diameter (PM_{10}). AMA established four PM_{10} monitoring stations in Area III in anticipation of the new PM_{10} standard. The annual average PM_{10} standard of 50 micrograms per cubic meter ($\mu g/m^3$) has not been exceeded since PM_{10} monitoring began in 1985; however, the 24-hour PM_{10} standard of 150 $\mu g/m^3$ was exceeded once in the City of Baltimore, indicating a potential there for violations of the NAAQS for PM_{10}. Particulate regulations in Maryland have not yet been modified to reflect the U.S. EPA replacement of the TSP standard with a PM_{10} standard. Therefore, the area around Sparrows Point is still classified as not in compliance with the secondary standard for TSP. When new PM_{10} regulations are enacted, AMA expects that the Sparrows Point area will be labeled a Group III PM_{10} area, indicating that there is a less than 20 percent chance that the area will violate the PM_{10} standard (Carter 1988).

Based on the reported monitoring results, air quality in the project area is in compliance with ambient air quality standards for all criteria pollutants with the exception of ozone. The ozone nonattainment status is a regional problem primarily associated with vehicle emissions in the Washington and Baltimore metropolitan areas, and is not related to the activities in the proposed project area. The proposed project should not be adversely affected by the ozone nonattainment status since installation of the new equipment will result in a decrease of fugitive VOC emissions.

Noise levels have not been measured near the project area. Since the proposed coke oven gas cleaning system will be constructed within the existing coal chemicals process area, existing process equipment and plant vehicles contribute to ambient noise levels in the vicinity of the proposed project. Also, the project area is located within two miles of several heavily traveled major roadways, including I-695, Sparrows Point Boulevard, and North Point Boulevard, all of which are thought to make significant contributions to ambient noise levels at the project site.

The nearest available noise measurements were collected on North Point Boulevard within approximately 200 yards of BSC property, about two miles northeast of the proposed project area. AMA measured daytime noise levels at this locations on three occasions in late 1988. There are plans to measure nighttime levels at the same location in the near future (Kaughlin 1988).

During the monitoring, ambient noise levels ranged from the upper 40s to the upper 50s dBA, with an equivalent sound level (L_{eq}) of 52-53 dBA[1] (Kaughlin 1988). The noise levels were found to be in compliance with Maryland standards. Maximum allowable daytime (0700 to 2200 hours) noise levels specified in COMAR 26.02.03.03 are 75 dBA for industrial, 67 dBA for commercial, and 65 dBA for residential land uses. Nighttime standards are 75, 62, and 55 dBA for industrial, commercial, and residential areas, respectively. An AMA official stated that the Sparrows Point monitoring indicated the major noise source at the monitoring location was motor vehicle traffic on North Point Boulevard; AMA could not discern any noticeable impact from any source at BSC (Kaughlin 1988).

3.2 Land Resources

The Sparrows Point Peninsula encompasses about 5,000 total acres and is roughly two miles by two miles square. Land at Sparrows Point, including the area of the proposed project, is relatively flat. The topography varies from sea level to approximately 15 feet above mean sea level (see Figure 3-2). As shown in Figure 3-3, the proposed site is above the 500-year floodplain in an area described by the Federal Emergency Management Agency as a zone of minimal flooding (FEMA 1981). Stormwater flows overland to storm sewers, which discharge through the facility's permitted 021 outfall to the Patapsco River, or infiltrates into the slag substrate.

---

[1] Noise levels are reported in the A-weighted decibel scale (dBA), which is a logarithmic scale that weights various components, or frequencies, of noise based on the response of the human ear. The equivalent sound level (L_{eq}) is defined as "the level of a constant sound which, in a given situation and time period, would convey the same sound energy as does the actual time-varying sound during the same period" (COMAR 26.02.03.01) and thus is essentially an average sound level.

Figure 3-2
Topographic Map of Sparrows Point Area

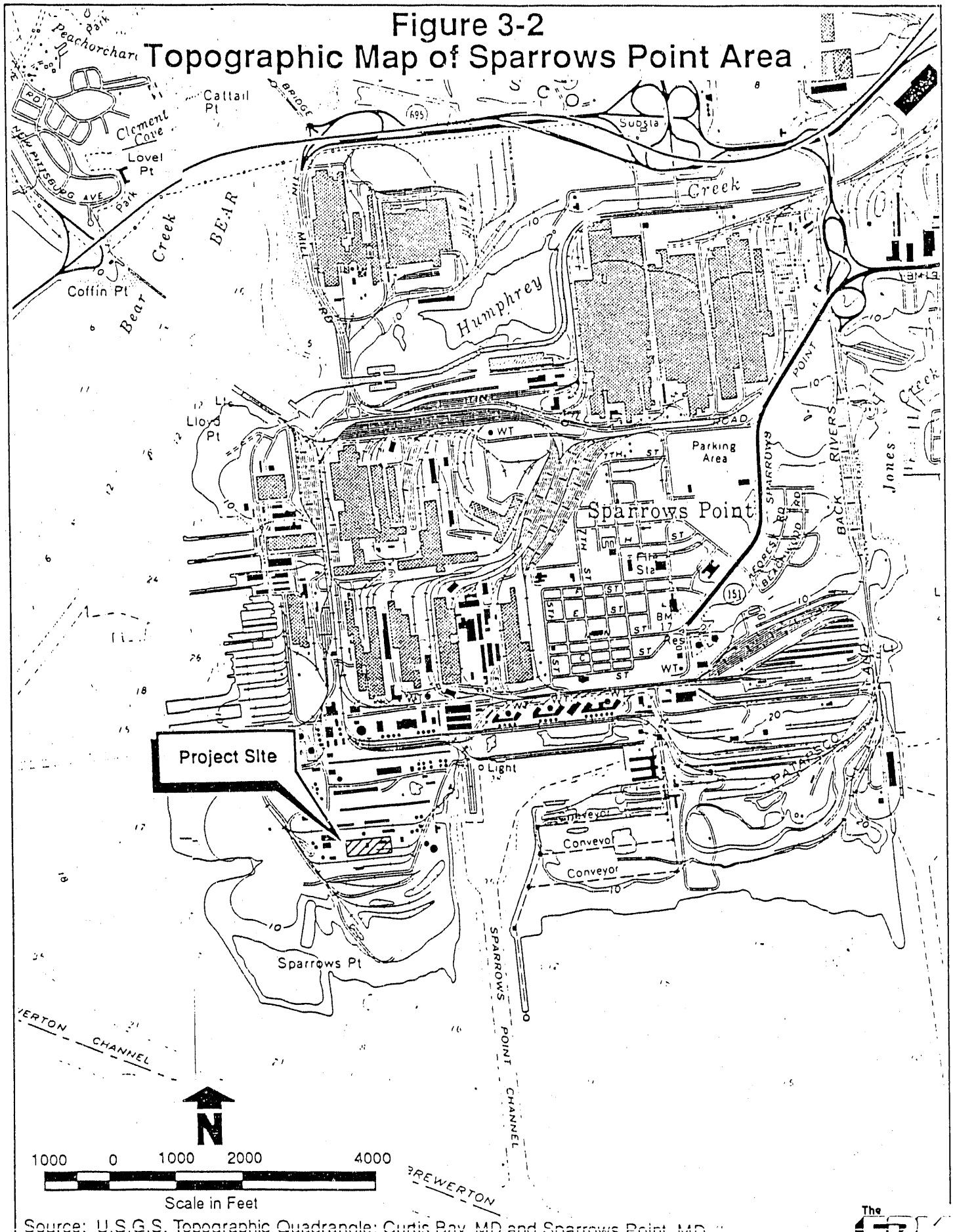

Source: U.S.G.S. Topographic Quadrangle; Curtis Bay, MD and Sparrows Point, MD

Figure 3-3
Flood Zones Around Sparrows Point

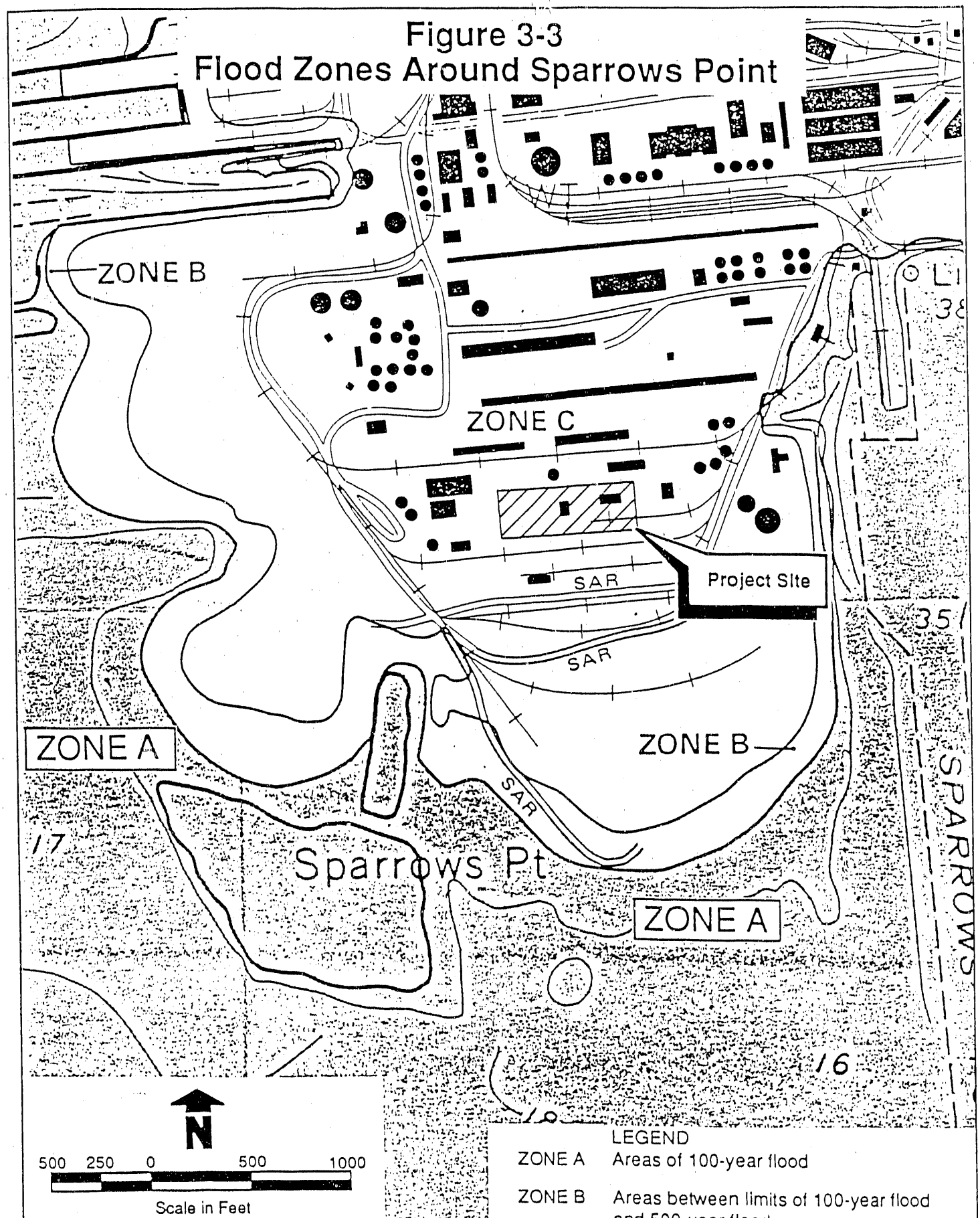

LEGEND

ZONE A	Areas of 100-year flood
ZONE B	Areas between limits of 100-year flood and 500-year flood
ZONE C	Areas of minimal flooding

Source: Flood Insurance Rate Map, Baltimore Co., Maryland

The ERM Group

The Sparrows Point site is located within the Atlantic Coastal Plain physiographic province. This geological province is characterized by the presence of thick deposits of unconsolidated clay, silt, sand, and gravel beds overlying the crystalline Precambrian Age rocks. These deposits range in age from Cretaceous (more than 100 million years old) to recent. The older deposits were laid down in a shifting fluvial (river) environment. The more recent deposits occur as surficial deposits along the trace of existing rivers and streams.

The major Coastal Plain geological units present beneath the site, from oldest to youngest, are summarized below. Figure 3-4 presents a typical geologic cross-section of the area.

- Patuxent Formation. The sediments of the Patuxent Formation consist of interfingered deposits of fine- to medium-grained sand and gravel, silt, and clay. The total thickness of the Patuxent Formation in the Sparrows Point area is estimated to be 300 feet.

- Arundel Clay. This unit directly overlies the Patuxent Formation and is comprised of a dense, plastic clay with thin layers of silt and sandy silt. This formation is approximately 100 to 150 feet thick beneath Sparrows Point.

- Patapsco Formation. This unit overlies the Arundel Clay and consists of sand beds interlayered with thin, discontinuous clay and silt beds. The unit is approximately 300 feet thick beneath Sparrows Point.

- Holocene and Pleistocene deposits. This mixture of gravel, sand, silt, and clay deposits forms the top 30 feet of surface outcrop. The deposits represent the river and terrace deposits of the Patapsco River.

Much of the present configuration of Sparrows Point, including the proposed project site, was created by filling shallow water areas and low areas with slag. Inspection of logs from foundation borings conducted within and near the project

Figure 3-4

Geologic Cross-Section

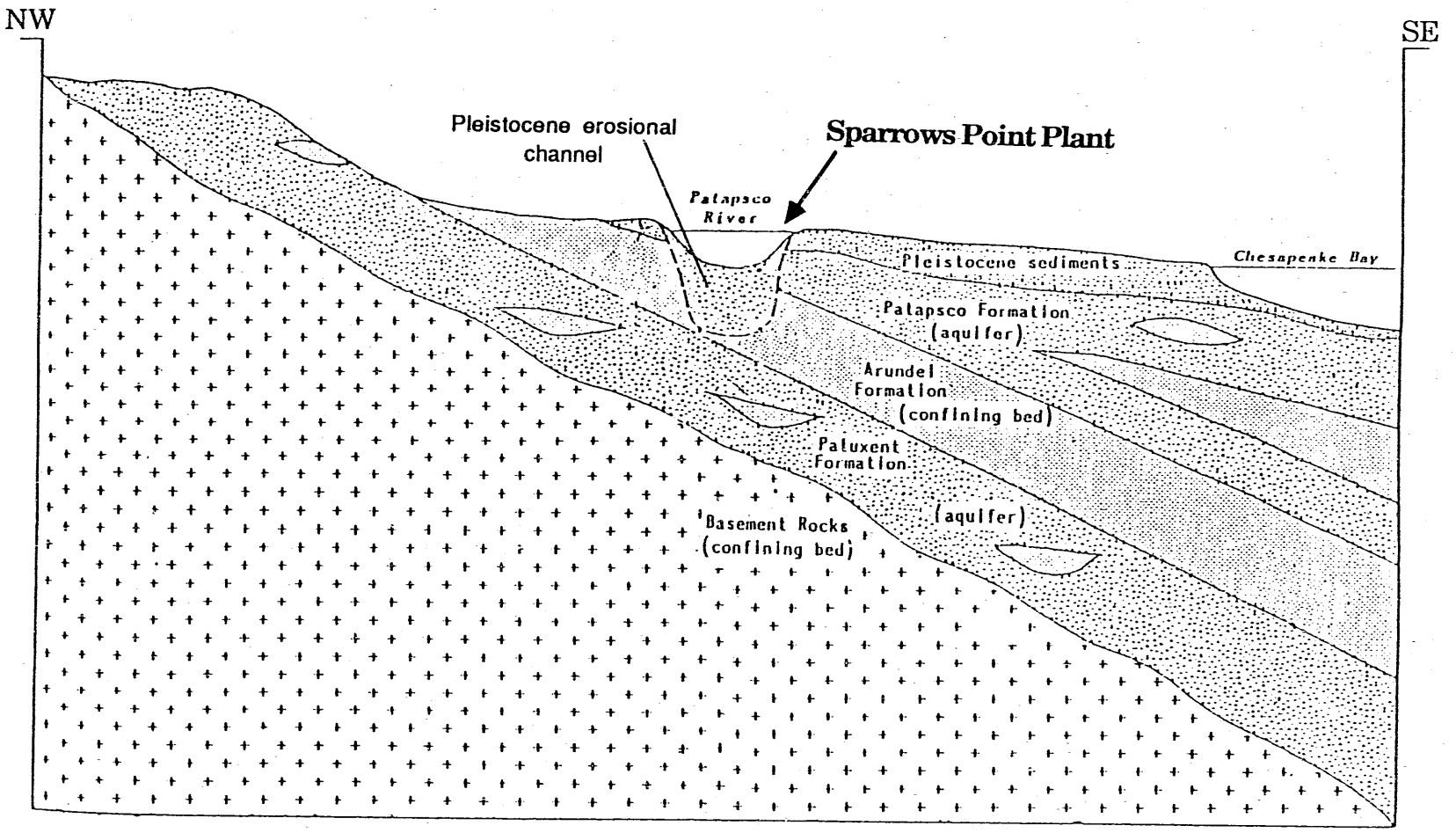

Legend: SEDIMENT PREDOMINANTLY SAND AND GRAVEL; SEDIMENT PREDOMINANTLY CLAY; CRYSTALLINE ROCKS

Source: Chapelle 1985

The ERM Group

site indicate that the approximate upper 20 feet of material consists generally of blast furnace slag and other fill materials such as refractories, concrete, brick bats, etc. Beneath the slag, the composition of the natural deposits varies considerably from location to location. Generally, there appear to be clayey silts and organic silts overlying more sandy material. Most of the borings were completed at depths ranging from 60 to 100 feet.

The proposed project site consists of the approximately 8.6 acres currently occupied by the existing B Coal Chemicals Plant. The site is located well within the boundaries of the Sparrows Point Plant, approximately 1,000 feet from the nearest shoreline property boundary and approximately two miles from the nearest land property boundary. The project site is bounded on all sides by existing process facilities, including the machine shop, coke oven batteries, and the A Coal Chemicals Plant to the north; the biological effluent treatment plant to the west; the coke oven offices to the east; and the slag fill area to the south.

The dominant land use feature in the area of the project is the steel plant itself, which is located in an area zoned "MH" (Manufacturing/Heavy) (Carignon 1989). Areas adjacent to the Sparrows Point property include residential areas across Jones Creek and Old Road Bay to the east; the I-695 interchange to the north; residential areas of Dundalk across Bear Creek to the northwest, and the Dundalk Marine Terminal, located further northwest approximately two miles from Sparrows Point; SCM Corporation and industries along Curtis Bay across the harbor from Sparrows Point to the west; and residential areas located in Anne Arundel County across the harbor to the south. The residential area nearest the project site is located approximately two miles east-northeast across Jones Creek.

Much of the proposed site (the existing B Coal Chemicals Plant) is located within the Chesapeake Bay Critical Area, a 1,000-foot zone surrounding the bay and its tributaries. The Critical Area was established by the State of Maryland in order to maintain and improve the water quality of the bay by regulating nonpoint-source run-off. Land use criteria and implementation guidelines were first developed by the Chesapeake Bay Critical Area Commission (a Maryland state agency); subsequently, the counties around the bay implemented the criteria by revising local zoning ordinances and development regulations.

The Critical Area within the Sparrows Point Plant is regulated by the Baltimore County Critical Area ordinances. The Critical Area portion of the plant is classified under the ordinances as an "intensely developed area" (IDA). Figure 3-5 shows the project site in relation to the Critical Area boundary. Development of additional facilities within the IDA must comply with regulations to reduce the intensity and pollutant load of run-off from storms. The required "best management practices" are now viewed as standard techniques for residential and industrial construction nationwide, and compliance for this project site should be readily achievable.

In addition, because the project site is within Maryland's Coastal Zone and will be supported in part by federal funds, it must be compatible with the stated goals and objectives of the State of Maryland Coastal Management Program. This type of project at this location (i.e., previously industrialized) is consistent with the State's program.

The area within a one-mile radius of the project area was reviewed for the presence of cultural resources, including archaeological sites, historic sites, and recreational areas. No recreational areas are located within one mile of the site. However, there are several parks and recreational areas two miles or more from the project site, including Fleming Park, located across Bear Creek in Dundalk (2 miles); Fort Howard, located across Old Road Bay to the east (2-1/4 miles); Fort Armistead Park, located to the west across Baltimore Harbor (2-1/4 miles); the Sparrows Point Country Club, located north of BSC (2-3/4 miles); and Fort Smallwood Park, located south across the Harbor (3 miles).

Two sites within one mile of the project site are listed as unconfirmed archaeological sites by the Maryland Historical Trust. Figure 3-6 shows the general locations of the sites. Both are believed to be approximate locations of old piers, based on information gathered during an underwater archaeological project. However, the sites have not been evaluated by a professional underwater archaeologist (Eaton 1988). Both sites are well outside the area to be affected by this project.

No historic sites listed on the National Register of Historic Places are located within one mile of the project site. However, the Maryland Historical Trust

Figure 3-5

Chesapeake Bay Critical Area Boundary

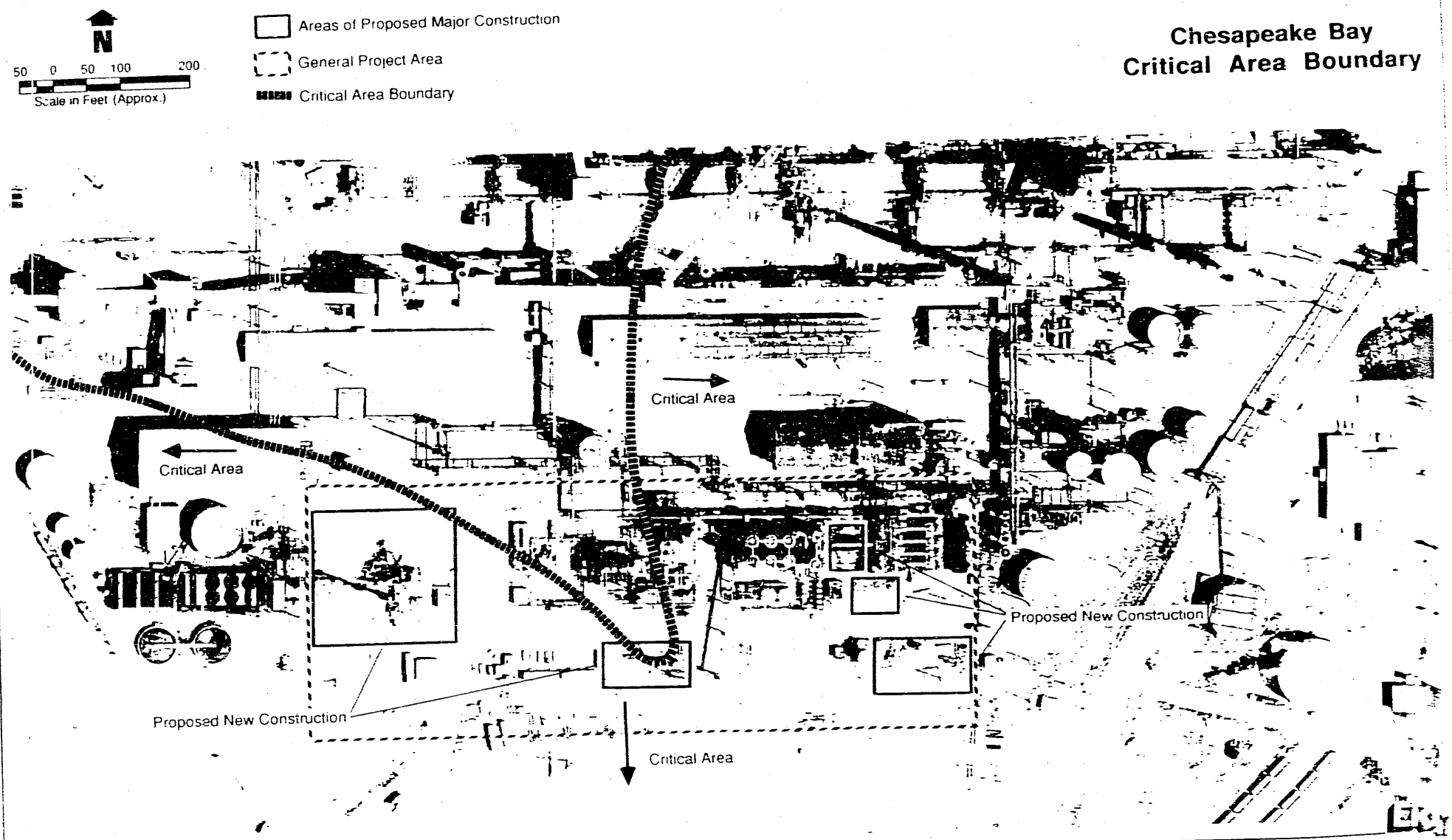

RB 5 Jan 89

Figure 3-6
Location of Archaeological Sites within One Mile of Project Site

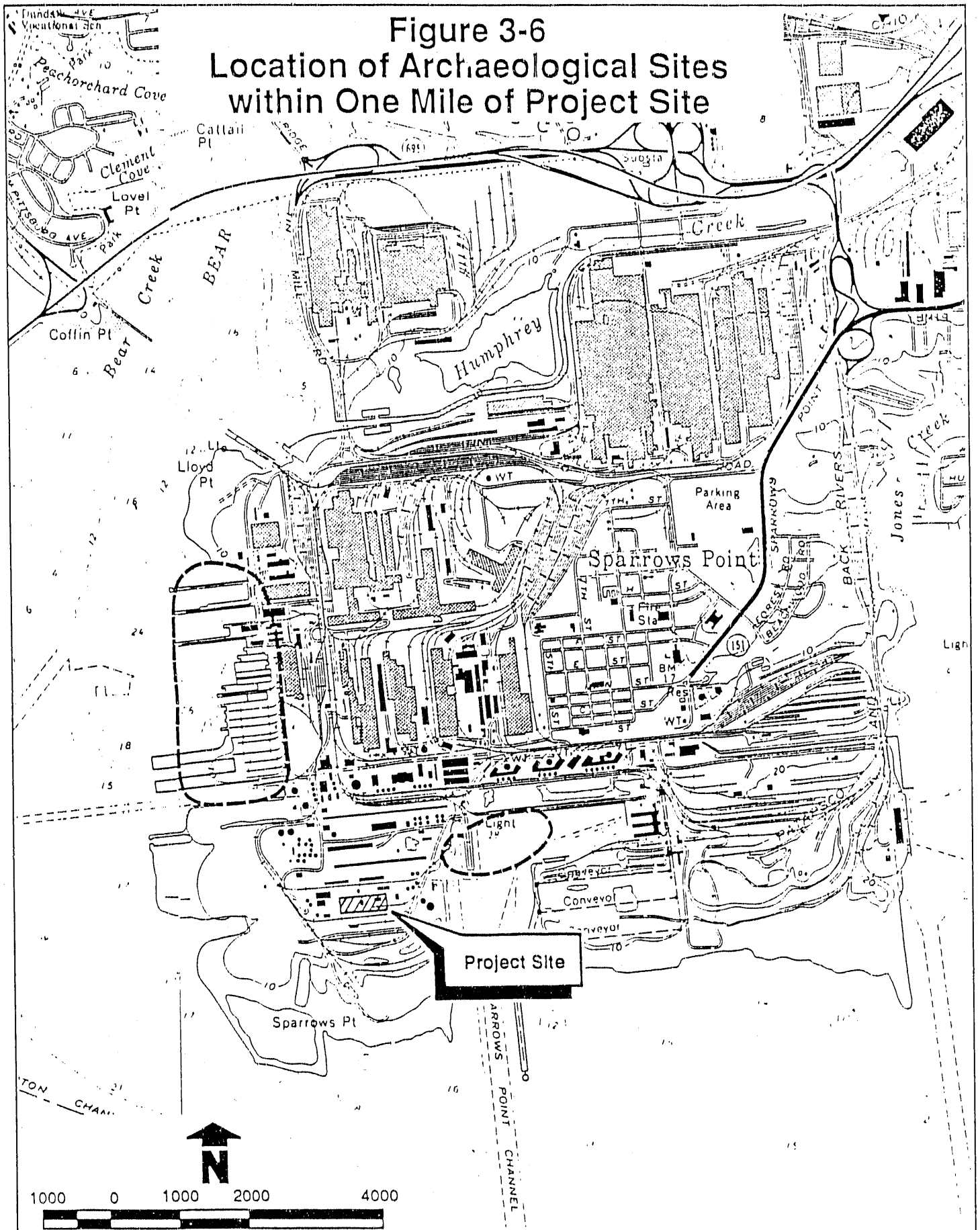

Source: Maryland Historical Trust

LEGEND
Approximate Archaeological Site Boundary

The ERM Group

determined in 1987 that the entire Sparrows Point Plant may be eligible for National Register status (Pencek 1988). No other potential Register sites are located within the one-mile radius.

Fort Carroll, an historic site eligible for National Register status, is located in Baltimore Harbor approximately 1-3/4 mile from the project site. Although it is distant from the project site, it is mentioned here because of the potential visibility of the proposed project from this site. Fort Carroll has been privately owned since 1958, and visitors are not allowed on the site. It was considered by Baltimore County for development as a recreational area, but was rejected (McGrain 1989). It is presently abandoned and there are no known plans for development.

The visual quality of the Harbor is dominated by industrial components. Although Sparrows Point is highly visible from many areas around the Harbor, the project site is overshadowed by the much larger components and many acres which comprise the rest of the plant. Components in the area of the proposed project are approximately two stories high. Other highly visible plant components include furnace stacks to the north, which are approximately 300 feet tall, and the large, bright orange ore field unloaders to the east.

3.3 Water Resources

Sparrows Point protrudes into the portion of the Patapsco River estuary that comprises the Baltimore Harbor. The 14-mile Patapsco estuary is located in the upper west side of the Chesapeake Bay. Baltimore Harbor is divided into two sections: the Inner Harbor, including the Northwest and Middle Branches, and the Outer Harbor, which includes the waters surrounding Sparrows Point. Sparrows Point is located approximately three miles upstream of the interface of Baltimore Harbor and the Chesapeake Bay proper. Surrounding the peninsula are Bear Creek to the west and Old Road Bay to the east. Figure 3-7 shows in greater detail the location of the Sparrows Point Plant with respect to surrounding water bodies.

Generally, the water quality of Baltimore Harbor degrades with distance upstream from the mouth. Major sources of pollution are urban stormwater run-off, industrial waste discharges, and sewage discharges. Water quality has

Figure 3-7
Water Bodies in the Sparrows Point Area

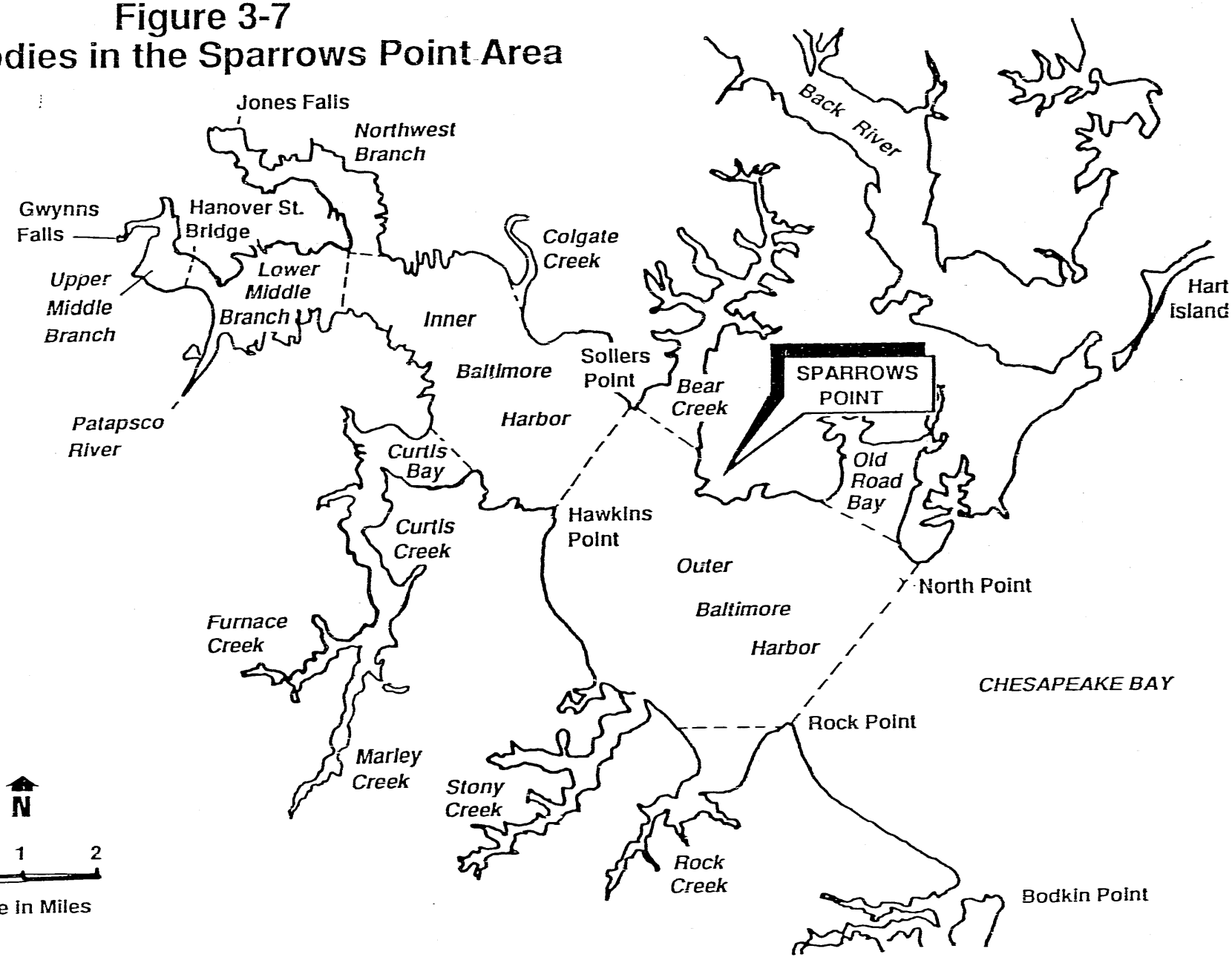

improved since the late 1960s and early 1970s. Dissolved oxygen concentrations have increased and fecal coliform bacteria concentrations have decreased, although sediments and water remain contaminated in portions of the harbor. Sediments have accumulated heavy metals, nutrients, and other contaminants, and may serve as a source of pollution to the waters. Almost continual dredging and filling operations have occurred in Baltimore Harbor over the years (Regional Planning Council 1982).

Waters of Baltimore Harbor are considered Class I, the least restrictive of the four classes that describe water use in Maryland and dictate the water quality criteria applied to an area. Class I waters are those which are protected for water-contact recreation and for fish, other aquatic life, wildlife, and water supply (COMAR 26.08.02.01). Water quality criteria for Class I waters are given in Table 3-2. According to MDE'S preliminary 304(l) lists, which identify stream segments impacted or possibly impacted by toxic materials, the water of Baltimore Harbor is impaired for aquatic life and human health. Toxic pollutants of particular concern are cadmium, copper, lead, mercury, and nickel, which are discharged to the harbor by industrial and municipal sources (MDE 1988).

The tide in the harbor is semidiurnal, with a mean tidal range of 1.1 foot measured at Fort McHenry in the Inner Harbor. The mean low tide for Baltimore is 0.6 foot below sea level. The water level of the 100-year storm wind surge is 8 feet above the mean local water level at Sparrows Point (U.S. Army Engineer District 1979). However, as stated earlier, the project site is more than 10 feet above sea level, which is above the level of the 500-year flood.

Port and industrial uses account for two thirds of harbor use, mainly concentrated in the Inner Harbor (U.S. Army Engineer District 1979). The Port of Baltimore is one of the world's leading seaports, and all heavy cargo traffic passes by Sparrows Point on its way up the harbor. The Brewerton Channel is the main channel in the harbor, and passes approximately 1,700 feet from Sparrows Point. Three ship channels serve Sparrows Point from the main channel (U.S. Army Engineer District 1979).

Much of the Inner Harbor's shoreline is bulkheaded or altered. This area is heavily industrialized, and many shipping channels dissect the waters,

Table 3-2

Water Quality Criteria Applicable to Class I Waters (State of Maryland)

Bacteriological: There may not be any sources of pathogenic or harmful organisms in sufficient quantities to constitute a public health hazard. A public health hazard will be presumed:

(i) If the fecal coliform density exceeds a log mean of 200 per 100 ml, based on a minimum of not less than five samples taken over any 30-day period;

(ii) If 10 percent of the total number of samples taken during any 30-day period exceed 400 per 100 ml; or

(iii) Except when a sanitary survey approved by the Department of the Environment discloses no significant health hazard, §D (3)(a)(i) and (ii) does not apply.

Dissolved Oxygen: The dissolved oxygen concentration may not be less than 5.0 mg/liter at any time.

Temperature:

(i) The maximum temperature in accordance with §F of this regulation or with COMAR 26.08.03.03 may not exceed 90°F (32°C) or the ambient temperature of the surface waters, whichever is greater.

(ii) A thermal barrier that adversely affects aquatic life may not be established.

pH: Normal pH values may not be less than 6.5 or greater than 8.5.

Turbidity:

(i) Turbidity may not exceed levels detrimental to aquatic life

(ii) Turbidity in the surface water resulting from any discharge may not exceed 150 units at any time or 50 units as a monthly average. Units may be measured in Nephelometer Turbidity Units, Formazin Turbidity Units, or Jackson Turbidity Units.

Toxic Materials Criteria: Toxic materials criteria are established to protect freshwater aquatic life, saltwater aquatic life or human health. The toxic materials listed below may not exceed these designated limits in any waters of this State:

(a) Aldrin-Dieldrin -- .003 micrograms/liter;

(b) Benzidine -- 0.1 micrograms/liter;

(c) DDT -- .001 micrograms/liter;

(d) Endrin -- .004 micrograms/liter;

(e) Polychlorinated Biphenyls (PCB's) -- .001 micrograms/liter;

(f) Toxaphene -- .005 micrograms/liter.

Source: COMAR 26.08.02.01

supporting the heavy ship traffic that is basic to Baltimore's economy. There are small areas of natural shoreline along creeks, with small private piers (Regional Planning Council 1982).

The Outer Harbor, where Sparrows Point is located, has four major tributaries: Stony Creek, Rock Creek, Bear Creek, and Old Road Bay. Much of the shoreline of the Outer Harbor is altered, but large stretches of natural shoreline exist along Stony and Rock Creeks. Water quality is better in these southern creeks than in Bear Creek and Old Road Bay, which are located on the northern side of the Outer Harbor around the Sparrows Point peninsula. These two northern creeks have altered shorelines, particularly around Sparrows Point, but wetlands are present in protected coves.

In addition to BSC's Sparrows Point Plant, residential and recreation/open space uses are found along the Outer Harbor. Several marinas are located along Old Road Bay and Bear Creek, but bathing along these areas has been restricted for several years due to high coliform counts resulting from residential septic tank seepage (U.S. Army Engineer District 1979).

Undisturbed natural shoreline dominates the mouth of the Outer Harbor, located to the east of Sparrows Point, where numerous wetlands exist and water quality is good. Large stretches of publicly owned land exist in this area (Regional Planning Council 1982).

Ground water in the Sparrows Point area occurs under confined conditions in the Patuxent Formation, and under unconfined (water table) conditions in the undifferentiated Patapsco Formation and Quaternary (Pleistocene and Holocene) deposits. The Arundel Clay acts as the overlying confining unit for the Patuxent aquifer and separates the two units. Table 3-3 lists typical concentrations of major ions and indicators of water quality in the Patuxent and Patapsco aquifers as measured in Baltimore area wells. No data exist on ground water quality below the specific project site, since there has not been a need to either pump or monitor ground water in that portion of the plant.

The Patuxent aquifer is used as a source of fresh water in the Baltimore area, including numerous wells located at Sparrows Point. Water quality data indicate

Table 3-3

Regional Inorganic Ground Water Quality

Dissolved Constituent	Concentration Range (in ppm) Patuxent Aquifer	Patapsco Aquifer
Calcium	0.4 - 150	0.5 - 14
Iron	<0.003 - 53	<0.003 - 3.3
Magnesium	0.3 - 340	0.3 - 6.7
Sodium	0.7 - 3,000	1.2 - 60
Potassium	0.3 - 85	0.2 - 2.1
Sulfate	1.0 - 240	1.0 - 17
Chloride	1.1 - 6,000	1.8 - 120
Fluoride	<0.1 - 0.6	<0.1

Indicators of Water Quality	Range Patuxent	Patapsco
pH	3.6 - 8.2	4.2 - 11.8
Temperature	11.0° - 18.0°C	12.5° - 16.0°C
Total Dissolved Solids	18 - 9,960 ppm	16 - 212 ppm

Source: Chapelle 1985

The ERM Group

that the water quality of the Patuxent can be highly variable (Chapelle 1985); however, in the Sparrows Point area the water quality is generally good. In fact, this area is distinguished by relatively low chloride concentrations indicating that the water has not been significantly affected by brackish water encroachment caused by excessive pumping. Generally, the Arundel Clay effectively isolates the Patuxent aquifer from industrial and pumping activities occurring at shallow depths.

Historically, the unconfined Patapsco aquifer was the first utilized in the Baltimore area as a source of fresh water. At the present time, use of this aquifer for potable water is very limited because its quality is generally poor, especially in the Sparrows Point area. Brackish water encroachment caused by past pumping at Sparrows Point has affected aquifer water quality, with chloride concentrations typically exceeding drinking water standards. Although most of the high-yield withdrawals in the Patapsco have ceased, it appears that the high chloride conditions in the Sparrows Point area persist, thus rendering the Patapsco water nonpotable.

3.4 Ecological Resources

A broad-scope biological study of Baltimore Harbor conducted in 1970-1971 by the University of Maryland Center for Environmental and Estuarine Studies (Regional Planning Council 1982) was concerned with four major groups of organisms: fish eggs and larvae, benthos, fish, and blue crab. Most aquatic organisms in the harbor were shown to be under stress. Results also showed that spawning habitat for fishes is very limited in the harbor. Although the water column still serves as a nursery and feeding ground for a variety of fish, bottom feeders do not do as well, indicating an unsuitable bottom habitat. Studies of benthic organisms and fish showed a decreasing trend from the entrance to the Outer Harbor to the Inner Harbor, indicating a less healthy environment in the upstream direction (Regional Planning Council 1982; Ecological Analysts 1984).

Wetlands are not extensive in the harbor area, but a number of healthy wetlands are present near the mouth of the Outer Harbor and in some of the tributaries. These areas are an important component of aquatic ecosystems. Although no wetlands exist on the project site itself, the National Wetland Inventory (NWI)

Map of the area (Figure 3-8), last updated in March 1982, indicated that there were small wetland areas to the southwest and northeast, the closest being approximately 1,500 feet in the southwesterly direction. These wetlands were classified as diked or impounded palustrine areas with open water which is intermittently exposed/permanent (NWI classification POWZh). The Inventory Map also indicated the presence of small areas of estuarine wetlands (NWI classification E1OWL) elsewhere along the shoreline of Sparrows Point.

Based on our own recent inspection of the project site, no part of it should be classified as wetlands. The substrate is primarily metallurgical slag, and there is no evidence of present or past saturation due to high water tables. The sparse vegetation of the site is devoid of any obligate wetland species. These observations revealed none of the characteristics that are indicative of established or emerging wetlands.

Our inspection confirmed the presence of the two potential wetland areas to the southwest of the project site shown in Figure 3-8. These are diked impoundments that were apparently in the process of being filled with slag at the time of the NWI mapping. Neither area shows as wetlands on the Maryland state wetland maps, based on earlier photographs taken in 1971. The dikes were constructed to contain slag and dredge spoil, and they temporarily impounded water prior to filling. Our inspection of the area to the northeast of the project site, indicated on the Inventory Map as a wetland area in 1982, did not reveal the presence of any wetlands.

The entire area surrounding the project site has been altered through slag filling and construction. Vegetation is non-existent at the project site and the areas surrounding it due to the filled nature of the site and the absence of any soil to support growth. Vegetation is sparse to the south of the project site because of the continual slag filling operations. There are no threatened or endangered species present and no unique habitats exist on or near the site (Burtis 1989; Wolflin 1989).

3.5 Socioeconomic Resources

Population in Baltimore City and Baltimore County was estimated for 1988 at 749,200 and 682,000 respectively, based on 1987 data. Growth rate forecasts show a

Figure 3-8
Wetlands of the Sparrows Point Area

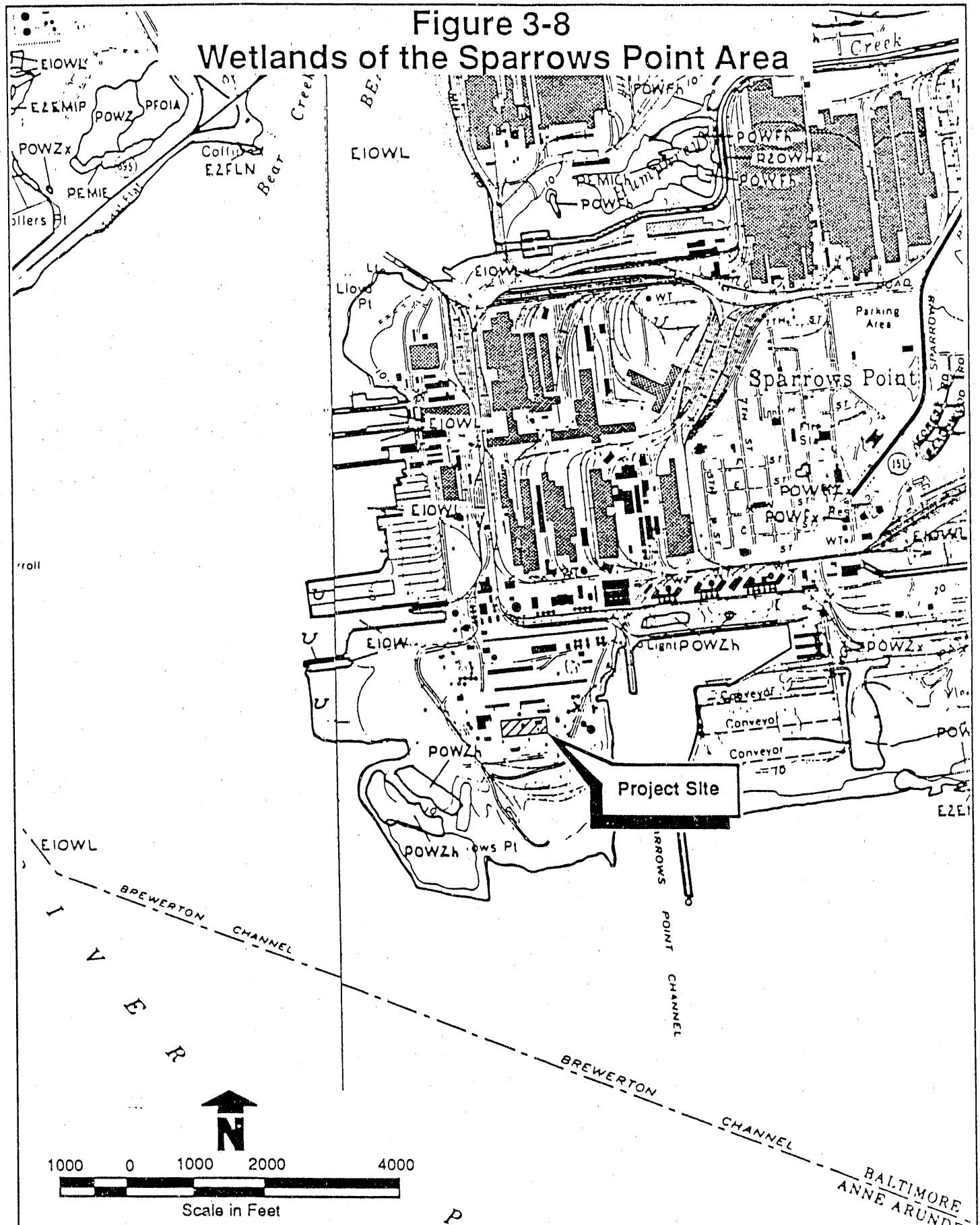

Source: National Wetlands Inventory Maps, Curtis Bay and Sparrows Point, Maryland Quadrangles

Figure 3-8 (continued)

Wetland Map Legend - for those areas occurring within Sparrows Point Plant boundary

U - Primarily represents upland areas, but may include unclassified wetlands such as man-modified areas, non-photo-identifiable areas, and/or unintentional omissions.

Estuarine Wetlands:

E1OWL Subtidal, Open Water/Unknown Bottom

Palustrine Wetlands:

PEM1Ch Emergent, Persistent, Seasonal (diked/impounded)

POW Open Water/Unknown Bottom
- POWFh Semipermanent (diked/impounded)
- POWFx Semipermanent (excavated)
- POWZ Intermittently Exposed/Permanent
- POWZh Intermittently Exposed/Permanent (diked/impounded)
- POWZx Intermittently Exposed/Permanent (excavated)

Riverine Wetlands:

R2OWHx Lower Perennial, Open Water/Unknown Bottom, Permanent (excavated)

1.1% decrease in the city and a 1.8% increase in the county from 1987 to 1992. Population is expected to decrease to 721,100 in Baltimore City and increase to 707,000 in the county by the year 2000 (Logan 1989).

Approximately 426,600 people were employed in the City in 1987, while about 360,500 were employed in Baltimore County. By the year 2000, these numbers are expected to reach 442,800 and 391,500 respectively (Logan 1989).

BSC's Sparrows Point Plant is a major employer in the Baltimore Metropolitan area with a large work force. Approximately 8,000 people are currently employed at the steel plant itself, comprising a total annual payroll of $255 million in 1988. In addition to the value of the payroll and the value of production, BSC also paid $9 million in taxes to the local and state governments in 1988.

Sparrows Point has excellent transportation facilities. BSC has its own docking facilities at Sparrows Point, which can accommodate deep-draft vessels and barges. BSC also has its own rail service, which connects to the Chessie System, Conrail, and the Western Maryland Railway. Highway access to the plant is good due to its connection via Sparrows Point Boulevard to the Baltimore Beltway (I-695) and the Francis Scott Key Bridge, which crosses the Patapsco River between Sollers Point on the north side and Hawkins Point to the south.

3.6 Energy and Material Resources

Potable water for use at the plant is obtained from the City of Baltimore. Water for industrial use is supplied by the Back River Sewage Treatment Plant, and brackish water from the Patapsco River is used for noncontact cooling. Other utilities, including electricity, sewer, steam, and natural gas, are already in place at the plant. Resource requirements for the project are described in Section 2.1.3.3 and Table 2-4.

SECTION 4

CONSEQUENCES

EHSS impacts associated with the proposed coke oven gas cleaning system are expected to be minimal. The following discussion considers the consequences of both construction and operation of the project on the various environmental conditions that were described in Section 3.

4.1 Atmospheric Impacts

Removal of existing equipment and construction and installation of new equipment will generate fugitive emissions of dust at the proposed project site; however, fugitive emissions from construction are not expected to have a significant effect on air quality in the region for several reasons. Installation of the proposed project does not involve any major earth moving. All roads to be used for access to the construction site are paved, so any increase in traffic on roads in the plant during construction should not lead to significant increases in amounts of road dust emitted. Also, the area affected by the proposed project is relatively small (less than 10 acres), and is in a location within the plant that has previously been developed.

Any impacts from fugitive dusts resulting from construction activities will be temporary and will cease when construction is complete. As Figure 2-10 illustrates, construction activities are expected to occur over a period of 23 months.

During operations, the proposed project will produce a positive impact on air quality in the area. Sulfur dioxide emissions from coke oven gas burning are expected to decrease from approximately 7,200 tons per year to 2,600 tons per year. This assumes that sulfur concentrations in the coke oven gas will be 70 grains H_2S/100 SCF, or about one-third the permitted sulfur concentration limit of 213 grains H_2S/100 SCF. Particulate emissions are expected to decrease under the proposed project also, since the new gas cleaning system will clean all of the coke oven gas, not just a portion as is the current practice. Nitrogen dioxide emissions

will not be significantly different from the current level of 0.1 pound per million Btu, since the proposed gas cleaning system will not significantly alter the nitrogen content or heating value of the product coke oven gas. Replacement of existing equipment with new project equipment will result in decreased fugitive VOC emissions, although it is difficult to estimate the magnitude of the reduction.

No significant increase in noise emissions should occur as a result of the proposed project, since the project is replacing currently operating equipment. Noise resulting from the project should be indistinguishable at the plant from noise generated by other processes and equipment at Sparrows Point. Further, noise from the project should not be distinguishable outside plant boundaries and there should be no discernable increase in off-site ambient noise levels, since the closest boundary to the project area is the Patapsco River approximately 1,000 feet to the south and the closest residential area is more than two miles to the northeast.

4.2 Land Impacts

Construction activities will occur primarily in the area of the "B" Coal Chemicals Plant. Less than 10 acres will be required for the project, and the project site is well within plant boundaries in an area composed of slag fill that is already developed. No land outside plant boundaries will be required for the project. All necessary utilities are currently in place.

The project site is located outside the 100- and 500-year floodplains, so no flooding problems are anticipated. The location of the project site within Baltimore County's Chesapeake Bay Critical Area zoning designation is not incompatible with this project, since the area is sub-classified as Intensely Developed, which allows for industrial development and redevelopment. Development or redevelopment within the Critical Area requires that certain procedures be followed, including the stipulation that a 100-foot buffer from the water's edge be left undisturbed during construction. Since the project area is approximately 1,000 feet from the nearest shore, a 100-foot buffer zone can easily be provided. It is further expected that the project will be able to comply with other Critical Area requirements to reduce run-off pollutant loadings. Compliance can be achieved by the employment of accepted "best management practices" to control

stormwater run-off. Plans for the proposed project include paving and curbing of process areas to collect stormwater for treatment in the existing wastewater treatment system. This will satisfy the requirement to reduce the intensity and pollutant load in run-off from the project site.

Cultural resources, including archaeological, historic, and recreational sites, are not expected to be impacted since all are located at a sufficient distance from the project area. Although the entire plant is eligible for National Historic Register status, the Maryland Historic Trust indicated that the proposed project is not expected to adversely impact the historic significance of the plant (Pencek 1989).

Impacts to the visual quality of the Baltimore Harbor area will be insignificant since the project is expected to be indistinguishable from the larger existing structures of the plant.

Since the proposed project will not generate solid waste on a routine basis, and the volumes to be generated will be small, requirements for landfill capacity and impacts to off-site disposal areas are expected to be minimal. The proposed project will eliminate the generation of low-grade ammonium sulfate, which is currently difficult to market and may require disposal. Spent catalysts will be generated approximately every five to eight years, when 320 cubic feet of nickel catalyst (5 tons) and 650 cubic feet of alumina catalyst (10 tons) will require replacement. It is anticipated that nickel catalyst will be returned to the vendor for regeneration or metal recovery. If regeneration is not feasible, the spent catalyst will be properly managed as a potential hazardous waste at an off-site treatment or disposal facility. Spent alumina catalyst from the existing Claus plant has been found to be nonhazardous, and has been disposed of in an approved on-site landfill. It is anticipated that this practice will continue with installation of the new Claus plant. If, however, the spent alumina catalyst were determined to be hazardous or recyclable, it would be properly managed. All hazardous waste handling at the plant will be conducted in accordance with Sparrows Point's existing hazardous waste management program.

4.3 Water Quality Impacts

Wastewater discharges from the coal chemicals plant are expected to consist of process effluents, noncontact cooling water, and stormwater run-off. Process effluents will be routed to the existing biological treatment system. Loadings are expected to be lower than those from the existing plant. As indicated in Table 2-4, plant noncontact cooling water requirements are expected to decrease by 24 percent after installation of the proposed project, reducing thermal discharges to the Patapsco River. The project will include paving and curbing of the process areas that are presently unpaved, to allow collection and treatment of stormwater in the existing biological treatment system.

The proposed coke oven gas cleaning facility uses an almost completely closed-cycle process that generates little liquid waste. The primary waste stream is the stripped wastewater from the ammonia stills, containing low concentrations of ammonia and hydrogen sulfide, which flows to the plant's existing biological treatment facility. This flow is projected to be 202 gpm, compared to the current estimated flow of 219 gpm. Another liquid waste stream flowing to the biological treatment facility is the effluent from the existing light oil recovery unit. This flow is expected to be 35 gpm. The current discharge from the cyanide stripper will be eliminated by the proposed process.

Two other units, the wet surface air cooler and the waste heat boiler, will generate a total flow of 110 gpm of blowdown water containing dissolved solids. Finally, occasional discharges from the overflow seal pots on each unit of the system will generate small intermittent flows to the treatment facility. All of these flows are small relative to the capacity of the treatment facility, which was designed to handle wastewater flows of up to 1422 gpm. As indicated in Table 2-6, the pollutant loading to the existing biological treatment system will be reduced by the proposed project. Since the existing plant meets discharge limits, the reduced pollutant loadings should ensure continued compliance.

As noted on Table 2-3 and in the plant's NPDES permit, BSC has requested a variance, under Section 301(g) of the Clean Water Act (CWA), for its ammonia and phenol discharge limits at Monitoring Point 121. While reviewing this request, EPA has decided to stay the more stringent Best Available Technology

(BAT) limits for these pollutants, pursuant to CWA Section 301(j). Should the waiver be granted, the alternate limits would be: ammonia – 1,968 pounds per day average; 4,724 pounds per day maximum; and phenol – 2.9 pounds per day average, 8.7 pounds per day maximum. Until the expiration of the stay, BSC must continue to comply with these alternate limits.

In 1987, BSC conducted acute and chronic bioassays on effluents collected from NPDES permitted outfalls 001, 014, and 021 (EA 1987). No acute toxicity was observed at any of the outfalls, but chronic toxicity was found at Outfall 021, which includes the treated effluent from the biological treatment plant. The State suspects that ammonia might play an important role in the Outfall 021 toxicity, but notes that BSC has applied to EPA for a 301(g) variance request for ammonia (Veil 1987). Since this request is still under review and, therefore, BSC's final effluent limit is uncertain, the State has not proposed that BSC conduct additional biomonitoring to date. If ammonia is, in fact, a contributor to chronic toxicity at Outfall 021, the proposed project will prove beneficial since ammonia loadings are expected to be reduced.

4.4 Ecological Impacts

Construction of new components and removal of old equipment will temporarily disturb several areas within the 8.6-acre project site. As discussed earlier, the entire area surrounding the project site is highly disturbed and has been altered through slag filling and construction, with no vegetation or natural communities remaining. Other higher quality habitat areas, including wetlands, are at sufficient distance (1,500 feet) from the project site that they will not be impacted by the project.

No threatened or endangered plants or animals are present on or near the project site. In addition, there are no expected negative impacts to water and air quality, with some beneficial consequences in terms of decreases in pollutant loading to the biological treatment system and sulfur dioxide emissions to the atmosphere. Therefore, no negative impacts to biota in the area are expected.

4.5 Socioeconomic Impacts

This project is a moderate-sized capital project for the Sparrows Point Plant. It is not unusual for BSC to have one or more projects of this size in process at Sparrows Point. At $40 million, this project represents only about one fifth of the capital project commitments for 1989.

As discussed in Section 2.1.3.3, the total amount of labor required for construction is expected to be approximately 202,000 man-hours, which will be spread over a 23-month period. Operational manpower requirements will not change significantly from current levels. Due to the availability of an ample work force in the metropolitan Baltimore area, the project will have negligible effect on population and local employment. Therefore, no impacts to local housing and support facilities are anticipated. The purchase of small items and materials may have a small positive impact on the local economy. Transportation impacts are expected to be minimal, since existing roads provide good access to the plant and are designed to handle large volumes of traffic. In addition, most transportation effects will be concentrated during the construction rather than operational phase of the project.

4.6 Energy and Materials Impacts

Resource requirements for the project are outlined in Section 2.1.3.3. All necessary utilities are already in place at the plant. River water, electricity, and natural gas requirements will decrease, while steam requirements will remain unchanged. The requirements for potable water, which is supplied by the City of Baltimore, and industrial water, which is treated sewage effluent, will increase slightly, causing the total plant demand to rise by 0.2% over current levels. Both types of water will be available in sufficient quantities to serve the project. Sodium hydroxide and other chemicals will also be required, all of which are readily available.

4.7 Impact Summary

Based on available information, no EHSS issues have been identified that would predict any significant adverse environmental impacts resulting from

construction and operation of the proposed coke oven gas cleaning system. In fact, the project is expected to result in a beneficial reduction in sulfur dioxide and visible emissions. Environmental impacts are expected to be minimal or negligible for several reasons, including: 1) the relatively small size of the project in relation to the existing plant and other industrial facilities in the area; 2) the highly developed nature of the project site and surrounding areas; 3) improvements or insignificant changes in waste production and discharges over current levels; and 4) the location of the proposed site well within plant boundaries, away from residential areas, cultural sites, and unique biological habitats.

No negative impacts have been identified that require mitigation or warrant additional environmental monitoring requirements. Current compliance monitoring practices should provide sufficient information to document compliance with applicable environmental standards. Effluent discharges from the biological treatment plant will continue to be sampled at Monitoring Point 121 and analyzed under the current conditions of the NPDES permit, included in Appendix B. Biomonitoring of Outfall 021 has been conducted in the past, and may be required again upon permit renewal.

The plant will also continue to monitor sulfur production and visible emissions to demonstrate compliance with air permits. As required in the Administrative Consent Order, BSC will conduct particulate emissions tests on the combustion stacks of Batteries A, 11, and 12 during 1990 (see Consent Order in Appendix C).

In summary, no negative environmental impacts have been identified that would cause the Sparrows Point site to be unsuitable for the proposed project. In fact, several beneficial consequences have been identified that could improve environmental conditions at Sparrows Point. These include: 1) reduction of sulfur dioxide and visible atmospheric emissions; 2) reduction of noncontact cooling water requirements; 3) reduction of pollutant loading to the effluent treatment system; 4) elimination of ammonium sulfate by-product, which is currently difficult to market; 5) reduction of cyanide and fugitive VOC emissions.

SECTION 5

REGULATORY COMPLIANCE

5.1 Regulations and Permit Requirements

This section describes the environmental laws and regulations with which the coke oven gas cleaning facility must comply. They include federal, State of Maryland, and Baltimore County statutes. In some cases, two or more levels of government maintain enforcement or other regulatory authority over the same issue. This section does not address non-environmental regulations affecting the construction and operation of the proposed facility (e.g., building construction permits and inspections).

This review of regulations focuses on the proposed coke oven gas cleaning system, from the point that the gas leaves the coke oven to the stage at which cleaned gas is piped to other parts of the plant and by-products are collected. The regulatory aspects of other plant operations that will not be affected by the installation or operation of the gas cleaning system (e.g., coal transshipment, cokemaking, steelmaking, forming and finishing operations, etc.) are not discussed.

5.2 Anticipated Permit Modifications

5.2.1 Air Permits

The Maryland Air Management Administration (AMA) is currently evaluating regulatory aspects of the proposed facility. AMA officials have identified three regulatory areas for which determinations must be made before permitting of the project can take place (Hall 1988). These areas include:

- applicability of Maryland's VOC regulations (COMAR 26.11.06.06);
- specifics of proposed National Emission Standard for Hazardous Air Pollutants (NESHAP) for benzene from chemical recovery plants (40 CFR

61, Subpart L--"National Emission Standard for Benzene from Coke By-Product Recovery Plants," proposed at 53 FR 28496); and

- requirements of Maryland's Toxic Air Pollutant (TAP) regulations (COMAR 26.11.15).

A fourth area in question regards a determination by AMA on whether the project qualifies as a new source or a modification to an existing source. AMA officials expect that the project will most likely be considered a modification to an existing source (Hall 1988).

BSC will be required to obtain a Permit to Construct (COMAR 26.11.02.03(A)) from AMA for the proposed project. The amount of information BSC must provide in support of the application, the need for a public hearing as part of the permitting process, and the duration of the permitting process will depend on whether the proposed project is considered by AMA as a new source or a modification to an existing source (Hall 1988). The project will also require an annually renewable Permit to Operate (under COMAR 26.11.02.03(B)), which similarly could be a new operating permit or a modification to an existing permit, depending on AMA's final determination. Permit requirements (monitoring, emissions limits, etc.) will be determined after AMA evaluates estimated emissions from the proposed project.

The VOC regulations in question (COMAR 26.11.06.06(B)) set limits on discharges of VOCs from installations in Areas III and IV (the Baltimore and Washington, D.C. metropolitan areas, respectively). For installations constructed after 12 May 1972, VOC emissions are limited to 20 pounds per day unless the discharge is reduced by 85 percent or more overall. AMA must determine the number of separate process lines involved in operations at BSC to determine compliance with the 20 pounds per day regulation (Hall 1988). AMA is evaluating the existing coal chemical operations, and will make its determination regardless of the status of the proposed project. If the new process has any effect on compliance, it will be a beneficial one, since replacement of existing equipment will reduce fugitive VOC emissions.

AMA officials stated that the proposed project will be subject to Maryland's Toxic Air Pollutant Regulations (COMAR 26.11.15) (Hall 1988). These regulations may require that Bethlehem Steel:

- quantify toxic air pollutant emissions from the proposed project;
- demonstrate Best Available Control Technology for toxic air pollutants (T-BACT); and
- perform an Ambient Impact Analysis.

AMA has not determined specific applicability of TAP regulations to the proposed project. For example, the T-BACT demonstration requirement may be waived since the project itself is the installation of emission reduction equipment.

One other regulation directly applicable to the proposed project is the "Sulfur Content Limitation for Coke Oven Gas" regulation (COMAR 26.11.10.05(B)). This regulation states that coke oven process gases used as fuel may not contain a plant-wide average of greater than 1.0 percent sulfur by weight (approximately 213 grains hydrogen sulfide per 100 SCF) in any two-hour period. The proposed project is designed to produce coke oven gas with a hydrogen sulfide concentration less than one third of the amount allowed by the regulation, so no compliance problems with the regulation are anticipated.

Despite the complex regulations involved, no major impediments to the air permitting process are expected. The fact that the project will assist BSC in complying with an Administrative Consent Order from MDE, and that the project involves installation of pollution control equipment, should expedite the permitting process (see Section 2.2.1).

5.2.2 Water/Solid Waste Permits

The environmental permits that may be required can be classified into construction-phase permits and operating permits. Construction permits address design and construction issues while operating permits govern the routine operational aspects of disposal of all solid and liquid wastes.

During construction, appropriate measures must be taken to control erosion and prevent sediment run-off from polluting nearby water bodies (COMAR 26.09.01). A Sediment and Erosion Control Plan must be submitted to the Baltimore County Department of Public Works as part of the overall county building permit application process. This plan must be approved by the county before any grading or construction can begin.

A related permit required by the state and issued by the county is a stormwater management plan for the operating facility (COMAR 26.09.02). The county may request that this plan be submitted with the Sediment and Erosion Control Plan if it appears that construction-phase sediment control facilities can also serve to control operation-phase stormwater run-off. Stormwater run-off control measures for the proposed facility must also address Maryland's Critical Area Regulations. These are discussed in detail in Section 5.2.3 below.

As discussed in Section 2, process wastewater from operation of the proposed facility will be sent to the existing biological treatment facility. The treatment facility is presently allowed to discharge its effluent under State Discharge Permit No. 79-DP-0064 (federal NPDES Permit No. MD0001201), which expires October 10, 1990. Effluent from the treatment plant is monitored at Monitoring Point 121, prior to discharge to the Patapsco River through Outfall 021. Noncontact cooling water and stormwater runoff from the coal chemicals plant also discharge through Outfall 021. As discussed in Section 4.3, the existing biological treatment facility will accommodate wastewater from the proposed process, which will be less than that from the existing process, and still meet the quality and quantity limitations of its existing permit. Thus, this project will not require that the State Discharge Permit be modified.

The BSC plant uses a total of about 400 million gallons per day of Patapsco River water for noncontact, once-through cooling; 28.6 million gallons per day of cooling water is required for the existing coal chemicals process. The discharge of the heated effluent is permitted under the existing State Discharge Permit. As discussed in Section 2.1, the proposed project will reduce noncontact cooling water requirements for the coal chemicals plant to 21.6 million gallons per day. Thus,

the provisions of the State Discharge Permit that address the intake and discharge of once-through cooling water are not likely to require modification.

The existing Spill Prevention, Control and Countermeasure Plan for the Sparrows Point Plant will be modified to include new operations under the proposed project. BSC will pave and curb the new process areas to allow collection of stormwater and to prevent contaminated run-off from entering surface water or infiltrating to ground water.

Solid wastes from the operation of the proposed facility will need to be managed, as discussed in Section 4.2. However, since materials will either be returned to the manufacturers for regeneration (spent nickel catalyst) or managed as nonhazardous waste on site (spent alumina catalyst), no new solid waste management permits should be required.

5.2.3 Other Required Permits and Approvals

Several state regulations apply to development in the coastal zone. These include state regulations governing construction on floodplains (COMAR 08.05.03), regulations limiting development in tidal wetlands (COMAR 08.05), and the Chesapeake Bay Critical Area regulations (COMAR 14.15). As described in Sections 3.2 and 3.4, the project will be constructed outside the 100-year floodplain and it will not affect tidal wetlands during either the construction or operation phases. The Critical Area regulations will, however, apply to this project. In addition, because federal funds are involved in a project located within Maryland's coastal zone, the project must be compatible with the state's Coastal Management Program.

5.2.3.1 Chesapeake Bay Critical Area

Part of the proposed facility site falls within Baltimore County's Chesapeake Bay Critical Area, a 1,000-foot wide zone extending inland from the high tide line of Chesapeake Bay waters. Development in this zone is regulated by the Baltimore County Critical Area Protection Plan, implemented in March 1988 to comply with state critical area regulations (COMAR 14.15.01-14.15.11). The location of the project site within the Critical Area zoning designation is not incompatible with

this project, since the area is sub-classified by the County as Intensely Developed, which allows for industrial development and redevelopment.

Development or redevelopment within the Critical Area requires that certain procedures be followed, including the stipulation that a 100-foot buffer from the water's edge be left undisturbed during construction. Since the project area is approximately 1,000 feet from the nearest shore, no impact will occur within the required buffer zone. Further, the project must comply with other Critical Area requirements to reduce run-off pollutant loadings. Compliance can be achieved by the employment of accepted "best management practices" to control stormwater run-off.

5.2.3.2 Review of Historic Properties

As discussed in Section 3.2, the entire BSC Sparrows Point Plant is eligible for National Historic Preservation under Section 106 of the National Historic Preservation Act. According to the Maryland Historical Trust, the proposed project is not expected to adversely affect the historical significance of the plant. Nevertheless, the Section 106 review process, outlined in 36 CFR 800, must be followed for the proposed project, and BSC has sent the appropriate information and written request to prompt this review (see Appendix D).

5.2.3.3 Coastal Zone Program Consistency

As stated in Section 307(c)(1) of the Coastal Zone Act (15 CFR 930), federal agencies supporting activities in the coastal zone must do so in a manner that is consistent with approved state management programs. BSC has determined that the proposed project is compatible with the State of Maryland Coastal Management Program, and has sent the appropriate information and written request to prompt the state's independent review of consistency (see Appendix D).

5.3 Potentially Applicable Regulatory Initiatives

EPA published proposed rules for a NESHAP for benzene from coke by-product recovery plants in July 1988 (53 FR 28496). The proposed rules list standards for a variety of equipment and processes applicable to the proposed project, including

standards for process vessels, tar storage tanks and intercepting sumps, light oil sumps, naphthalene processing, and benzene equipment leaks. Promulgation of the proposed NESHAP could affect the operating permit requirements for the proposed project. These standards would also affect the existing operation or any of the possible alternatives to the proposed project.

Although the proposed facility may not trigger modification of the existing NPDES discharge permit, other ongoing regulatory initiatives may cause the permit limitation to be modified about the time that the proposed facility is being put on line. As discussed in Section 4.3, BSC has applied for a 301(g) variance for its permitted discharge at Monitoring Point 121. EPA has granted a stay of the more stringent BAT effluent limitations, and the plant is currently complying with the alternate limits established in the NPDES permit. The permit limits could change in the future, upon expiration of the stay or when EPA makes a final determination on the variance request.

Another possible cause for a permit modification would be the upcoming review under Section 304(l) of the federal Clean Water Act of 1987. This statute requires that the state identify water bodies that are not meeting their receiving water goals because of point-source discharges of toxic substances. By February 4, 1989 the states were to have identified those discharges that contribute toxic materials in toxic amounts to these water bodies. The states must then promulgate individual control strategies for these discharges (e.g., Best Available Technology), and require the implementation of the strategies by means of modifications to the discharge permits. The State of Maryland did place BSC's Sparrows Point Plant on its final 304(l) list. However, the Section 304(l) review is independent of the proposed gas cleaning facility and will not directly affect the permitting of the project.

SECTION 6

REFERENCES

Burtis, J. 1989. Letter from J. Burtis, Assistant Director, Maryland Forest, Park and Wildlife Service, Annapolis, MD, to J. Tomko, Environmental Resources Management, Inc., Annapolis MD. 9 January 1989.

Carignon, R. 1989. Personal communication from R. Carignon, Director, Baltimore County Economic Development Commission, Towson, MD, to J. Bartoshesky, Environmental Resources Management, Inc., Annapolis, MD. 4 January 1989.

Carter, E. 1988. Personal communication from E. Carter, Maryland Department of the Environment, Air Management Administration, Baltimore, MD, to J. Bartoshesky, Environmental Resources Management, Inc., Annapolis, MD. 29 December 1988.

Chapelle, F. H. 1985. Hydrology, digital solute-transport simulation, and geochemistry of the Lower Cretaceous aquifer system near Baltimore, Maryland: Report of Investigations No. 43, Maryland Geological Survey.

EA Engineering, Science, and Technology, Inc. 1987. Acute and chronic toxicity tests on effluents collected from Outfalls 001, 014, and 021 of Bethlehem Steel's Sparrows Point Plant. Prepared for Bethlehem Steel, Sparrows Point, MD.

Eaton, E. 1988. Personal communication from E. Eaton, Maryland Historical Trust, Annapolis, MD, to J. Tomko, Environmental Resources Management, Inc., Annapolis, MD. December 1988.

Ecological Analysts, Inc. 1984. Seagirt Marine Terminal environmental inventory/existing conditions report. Prepared for Maryland Port Administration, Baltimore, MD.

FEMA (Federal Emergency Management Agency). 1981. National Flood Insurance Program, Flood Insurance Rate Map, Baltimore County, MD.

Flowers, D. 1988. Personal communication from D. Flowers, Baltimore County Department of Environmental Protection and Resource Management, Towson, MD, to J. Tomko, Environmental Resources Management, Inc., Annapolis, MD. 12 December 1988.

Hall, R. 1988. Personal communication from R. Hall, Maryland Department of the Environment, Air Management Administration, Baltimore, MD, to J. Bartoshesky, Environmental Resources Management, Inc., Annapolis, MD. 29 December 1988.

Kaughlin, M. 1988. Personal communication from M. Kaughlin, Maryland Department of the Environment, Air Management Administration, Baltimore, MD, to J. Bartoshesky, Environmental Resources Management, Inc., Annapolis, MD. 20 December 1988.

Logan, M. 1989. Personal communication from M. Logan, Regional Planning Council, Baltimore, MD, to J. Bartoshesky, Environmental Resources Management, Inc., Annapolis, MD. 4 January 1989.

McGrain, J. 1989. Personal communication from J. McGrain, Baltimore County Planning Department, Towson, MD, to J. Bartoshesky, Environmental Resources Management, Inc., Annapolis, MD. 4 January 1989.

MDE (Maryland Department of the Environment). 1988. Preliminary Clean Water Act Section 304(l) lists: Maryland waters impaired by toxic pollutants. Submitted to U.S. EPA Region III, Philadelphia, PA.

Pencek, W. 1988. Personal communication from W. Pencek, Maryland Historical Trust, Annapolis, MD, to J. Tomko, Environmental Resources Management, Inc., Annapolis, MD. 9 December 1988.

_____. 1989. Personal communication from W. Pencek, Maryland Historical Trust, Annapolis, MD, to J. Tomko, Environmental Resources Management, Inc., Annapolis, MD. 4 January 1989.

Platts, M. 1989. Personal communication from M. Platts, Davy/Still-Otto, Pittsburgh, PA, to D. Mountain, Environmental Resources Management, Inc., Annapolis, MD. 18 April 1989.

Regional Planning Council. 1982. Baltimore Harbor environmental enhancement plan.

U.S. Army Engineer District, Baltimore, MD. 1979. Permit application for slag filling at the Bethlehem Steel Sparrows Point Plant, Baltimore County, Maryland.

Veil, J. 1987. Letter from J. Veil, Chief, Industrial Point Source Control Division, Maryland Department of the Environment, Baltimore, MD, to J. Mendelson, Environmental Control, Bethlehem Steel Corporation, Sparrows Point, MD. 9 November 1987.

Wolflin, J. 1989. Letter from J. Wolflin, U.S. Fish and Wildlife Service, Division of Ecological Services, Annapolis, MD, to G. Cada, Oak Ridge National Laboratory, Oak Ridge, TN. 12 April 1989.

APPENDIX A

Priority Pollutants Analytical Data

E PRINT OR TYPE IN THE UNSHADED AREAS ONLY. You may report some or all of
ormation on separate sheets *(use the same format)* instead of completing these pages.
STRUCTIONS.

EPA I.D. NUMBER *(copy from Item I of Form 1)*
MDD 053945432

Form Approved OMB No. 158-R0173

OUTFALL NO
121

TAKE AND EFFLUENT CHARACTERISTICS *(continued from page 3 of Form 2-C)*

A - You must provide the results of at least one analysis for every pollutant in this table. Complete one table for each outfall. See instructions for additional details.

LUTANT	2. EFFLUENT a. DAILY VALUE (1) CONCENTRATION	(2) MASS	b. MAXIMUM 30 DAY VALUE (if available) (1) CONCENTRATION	(2) MASS	c. LONG TERM AVRG. VALUE (if available) (1) CONCENTRATION	(2) MASS	d. NO. OF ANALYSES	3. UNITS (specify if blank) a. CONCENTRATION	b. MASS	4. INTAKE (optional) a. LONG TERM AVERAGE VALUE (1) CONCENTRATION	(2) MASS	b. NO. OF ANALYSES
hemical Demand	-	-					-	-	-	See Intake 050		
nical Demand	490	4095					1	mg/l	lb/d			
Organic (TOC)	51.5	515					1	mg/l	lb/d	Bio-ox plant		
Suspended (TSS)	278	2780					1	mg/l	lb/d	effluent		
onia (as N)	119	1190					1	mg/l	lb/d	(1987)		
	VALUE 11.2		VALUE		VALUE		1	MGD	-	V flow 0.75 MGD		
erature	VALUE		VALUE		VALUE		-	°C		V		
erature	VALUE 27.0		VALUE		VALUE		4	°C		VALUE		
	MINIMUM 7.0	MAXIMUM 7.1	MINIMUM	MAXIMUM			4	STANDARD UNITS				

B - Mark "X" in column 2-a for each pollutant you know or have reason to believe is present. Mark "X" in column 2-b for each pollutant you believe to be absent. If you mark column 2-a for any pollutant, you must provide the results of at least one analysis for that pollutant. Complete one table for each outfall. See the instructions for additional details and requirements.

LUTANT (NO. lable)	2. MARK "X" a. EXPECTED PRESENT	b. BELIEVED ABSENT	3. EFFLUENT a. DAILY VALUE (1) CONCENTRATION	(2) MASS	b. MAXIMUM 30 DAY VALUE (if available) (1) CONCENTRATION	(2) MASS	c. LONG TERM AVRG. VALUE (if available) (1) CONCENTRATION	(2) MASS	d. NO. OF ANALYSES	4. UNITS a. CONCENTRATION	b. MASS	5. INTAKE (optional) a. LONG TERM AVERAGE VALUE (1) CONCENTRATION	(2) MASS	b. NO. OF ANALYSES
ide 67-9)	X		Interference	-					1	mg/l	lb/d	See Intake 050		
rine, esidual	X		0	0					4	mg/l	lb/d			
	X		1000	-					1	Pt-Co	--			
n	X		0	-					4	per 100 ml	-			
ide 43-8)	X		4.0	40					1	mg/l	lb/d			
ig - (as N)	X		<0.1	<0					1	mg/l	lb/d			

CONTINUE ON REVERSE

1. POLLUTANT AND CAS NO. (If available)	2. MARK "X" a. BELIEVED PRESENT	b. BELIEVED ABSENT	3. EFFLUENT a. DAILY VALUE (1) CONCENTRATION	(2) MASS	b. MAXIMUM 30 DAY VALUE (If available) (1) CONCENTRATION	(2) MASS	c. LONG TERM AVRG. VALUE (If available) (1) CONCENTRATION	(2) MASS	d. NO. OF ANALYSES	4. UNITS a. CONCENTRATION	b. MASS	5. INTAKE (optional) a. LONG TERM AVERAGE VALUE (1) CONCENTRATION	(2) MASS	b. NO. OF ANALYSES
) Nitrogen, Total Organic as N)	X		1.4	14					1	mg/l	lb/d	See Intake 050		
. Oil and Grease	X		2.34	23.4					4	mg/l	lb/d			
Phosphorus as P), Total 7723 14 0)	X		0.33	3.3					1	mg/l	lb/d			
. Radioactivity														
1) Alpha, Total		X	-	-					-	-	-			
2) Beta, Total		X	-	-					-	-	-			
3) Radium, Total		X	-	-					-	-	-			
4) Radium 226, Total		X	-	-					-	-	-			
. Sulfate as SO_4) 14808 79-8)	X		825	8255					1	mg/l	lb/d			
. Sulfide as S)	X		<0.02	<0.2					1	mg/l	lb/d			
. Sulfite as SO_3) 14265 45-3)	X		2.0	20					1	mg/l	lb/d			
. Surfactants	X		0.52	5.2					1	mg/l	lb/d			
. Aluminum, Total 7429 90 5)	X		1.5	15					1	mg/l	lb/d			
. Barium, Total 7440 39 3)	X		0.03	0.3					1	mg/l	lb/d			
. Boron, Total 7440 42 8)	X		0.52	5.2					1	mg/l	lb/d			
. Cobalt, Total 7440 48-4)	X		<0.05	<0.5					1	mg/l	lb/d			
Iron, Total 7439 89 6)	X		1.25	12.5					1	mg/l	lb/d			
Magnesium, Total 7439 95 4)	X		10.5	105					1	mg/l	lb/d			
Molybdenum, Total 7439 98 7)	X		<0.1	<1					1	mg/l	lb/d			
. Manganese, Total 7439 96 5)	X		0.09	0.9					1	mg/l	lb/d			
. Tin, Total 7440 31 5)	X		<0.5	<5					1	mg/l	lb/d			
. Titanium, Total 7440 32 6)	X		0.02	0.2					1	mg/l	lb/d			

CONTINUE ON PAGE V-3

EPA I.D. NUMBER (copy from Item 1 of Form 1)	OUTFALL NUMBER
MDD 053945432	121

Form Approved OMB No. 158-R0173

ONTINUED FROM PAGE 3 OF FORM 2-C

PART C - If you are a primary industry and this outfall contains process wastewater, refer to Table 2c-2 in the instructions to determine which of the GC/MS fractions you must test for. Mark "X" in column 2-a for all such GC/MS fractions that apply to your industry and for ALL toxic metals, cyanides, and total phenols. If you are not required to mark column 2-a *(secondary industries, non-process wastewater outfalls, and non-required GC/MS fractions)*, mark "X" in column 2-b for each pollutant you know or have reason to believe is present. Mark "X" in column 2-c for each pollutant you believe to be absent. If you mark either columns 2-a or 2-b for any pollutant, you must provide the results of at least one analysis for that pollutant. Note that there are seven pages to this part; please review each carefully. Complete one table *(all seven pages)* for each outfall. See instructions for additional details and requirements.

1. POLLUTANT AND CAS NUMBER (if available)	2. MARK 'X' a. TESTING REQUIRED	b. BELIEVED PRESENT	c. BELIEVED ABSENT	3. EFFLUENT a. DAILY VALUE (1) CONCENTRATION	(2) MASS	b. MAXIMUM 30 DAY VALUE (if available) (1) CONCENTRATION	(2) MASS	c. LONG TERM AVRG. VALUE (if available) (1) CONCENTRATION	(2) MASS	d. NO. OF ANALYSES	4. UNITS a. CONCENTRATION	b. MASS	5. INTAKE (optional) a. LONG TERM AVERAGE VALUE (1) CONCENTRATION	(2) MASS	b. NO. OF ANALYSES
ETALS, CYANIDE, AND TOTAL PHENOLS															
M. Antimony, otal (7440-36-0)	X			0.11	1.1					1	mg/l	lb/d	See Intake 050		
M. Arsenic, Total 440-38-2)	X			0.02	0.2					1	mg/l	lb/d			
M. Beryllium, otal, 7440-41-7)	X			<0.05	<0.5					1	mg/l	lb/d			
M. Cadmium, otal (7440-43-9)	X			<0.05	<0.5					1	mg/l	lb/d			
M. Chromium, otal (7440-47-3)	X			0.09	0.9					1	mg/l	lb/d			
M. Copper, Total 660-50-8)	X			<0.03	<0.3					1	mg/l	lb/d			
M. Lead, Total 439-97-6)	X			0.25	2.5					1	mg/l	lb/d			
M. Mercury, Total 439-97-6)	X			<0.001	<0.01					1	mg/l	lb/d			
M. Nickel, Total 440-02-0)	X			<0.1	<1					1	mg/l	lb/d			
M. Selenium, tal (7782-49-2)	X			0.08	0.8					1	mg/l	lb/d			
M. Silver, Total 440-22-4)	X			<0.5	<5					1	mg/l	lb/d			
M. Thallium, tal (7440-28-0)	X			<0.5	<5					1	mg/l	lb/d			
M. Zinc, Total 440-66-6)	X			0.09	0.9					1	mg/l	lb/d			
M. Cyanide, tal (57-12-5)	X			1.78	17.8					4	mg/l	lb/d			
M. Phenols, tal	X			<0.01	<0.1					4	mg/l	lb/d			
OXIN															
7,8 Tetra-orodibenzo P-oxin (1764-01-6)			X	DESCRIBE RESULTS											

POLLUTANT AND CAS NUMBER (if available)	2. MARK 'X' a. TEST PRODUCED	b. BELIEVED PRESENT	c. BELIEVED ABSENT	3. EFFLUENT a. DAILY VALUE (1) CONCENTRATION	(2) MASS	b. MAXIMUM 30 DAY VALUE (if available) (1) CONCENTRATION	(2) MASS	c. LONG TERM AVRG. VALUE (if available) (1) CONCENTRATION	(2) MASS	d. NO. OF ANALYSES	4. UNITS a. CONCENTRATION	b. MASS	5. INTAKE (optional) a. LONG TERM AVERAGE VALUE (1) CONCENTRATION	(2) MASS	b. NO. OF ANALYSES
MS FRACTION – VOLATILE COMPOUNDS															
Acrolein (7 02 8)	X			ND*						1	ug/l	lb/d	See Intake 050		
Acrylonitrile (7-13 1)	X			ND						1	ug/l	lb/d			
Benzene (43 2)	X			< 10	< 0.1					1	ug/l	lb/d			
Bis (Chloro-hyl) Ether (2 88 1)	X			ND						1	ug/l	lb/d			
Bromoform (26 2)	X			ND						1	ug/l	lb/d			
Carbon rachloride (23 5)	X			ND						1	ug/l	lb/d			
Chlorobenzene (8 90-7)	X			< 10	< 0.1					1	ug/l	lb/d			
Chlorodi-momethane (4 48-1)	X			ND						1	ug/l	lb/d			
Chloroethane (00 3)	X			ND						1	ug/l	lb/d			
2-Chloro-ivinyl Ether (0 75 8)	X			ND						1	ug/l	lb/d			
Chloroform (66 3)	X			ND						1	ug/l	lb/d			
Dichloro momethane (27-4)	X			ND						1	ug/l	lb/d			
Dichloro-uoromethane (71 8)	X			ND						1	ug/l	lb/d			
1,1 Dichloro-ane (75 34 3)	X			ND						1	ug/l	lb/d			
1,2 Dichloro-ane (107-00-2)	X			ND						1	ug/l	lb/d			
1,1 Dichloro-ylene (75 35 4)	X			ND						1	ug/l	lb/d			
1,2 Dichloro-pane (78 87 5)	X			ND						1	ug/l	lb/d			
1,2 Dichloro pylene (2 75 6)	X			ND						1	ug/l	lb/d			
Ethylbenzene (0 41 4)	X			ND						1	ug/l	lb/d			
Methyl mide (74 83 9)	X			ND						1	ug/l	lb/d			
Methyl oride (74 87 3)	X			ND						1	ug/l	lb/d			

CONTINUE ON PAGE V-5

...PUFO FROM PAGE V-4 | ADD 055545432 | 121 | Form Approved OMB No. 158 R0173

1. POLLUTANT AND CAS NUMBER (if available)	2. MARK "X" a. TASTING REQUIRED	b. RELIEVED PRESENT	c. RELIEVED ABSENT	3. EFFLUENT a. DAILY VALUE (1) CONCENTRATION	(2) MASS	b. MAXIMUM 30 DAY VALUE (if available) (1) CONCENTRATION	(2) MASS	c. LONG TERM AVRG. VALUE (if available) (1) CONCENTRATION	(2) MASS	d. NO. OF ANALYSES	4. UNITS a. CONCENTRATION	b. MASS	5. INTAKE (optional) a. LONG TERM AVERAGE VALUE (1) CONCENTRATION	(2) MASS	b. NO. OF ANALYSES
C/MS FRACTION — VOLATILE COMPOUNDS (continued)															
V. Methylene loride (75-09-2)	X			ND						1	ug/l	lb/d	See Intake 050		
V. 1,1,2,2-Tetra loroethane 9 34 5)	X			ND						1	ug/l	lb/d			
V. Tetrachloro- ylene (127-18-4)	X			< 10	< 0.1					1	ug/l	lb/d			
V. Toluene 8-88-3)	X			< 10	< 0.1					1	ug/l	lb/d			
V. 1,2-Trans- chloroethylene 6 50 5)	X			ND						1	ug/l	lb/d			
V. 1,1,1-Tri- ernethane 55 6)	X			ND						1	ug/l	lb/d			
V. 1,1,2-Tri- oroethane 00 5)	X			ND						1	ug/l	lb/d			
/. Trichloro- ylene (79-01-6)	X			ND						1	ug/l	lb/d			
/. Trichloro- romethane 69 4)	X			ND						1	ug/l	lb/d			
/. Vinyl oride (75-01-4)	X			ND						1	ug/l	lb/d			
MS FRACTION — ACID COMPOUNDS															
2 Chlorophenol 67 8)	X			ND						1	ug/l	lb/d			
2,4 Dichloro- nol (120 83 2)	X			ND						1	ug/l	lb/d			
2,4-Dimethyl- nol (105 67-9)	X			ND						1	ug/l	lb/d			
4,6 Dinitro-O- ol (534 52-1)	X			ND						1	ug/l	lb/d			
2,4 Dinitro- nol (51-28-5)	X			ND						1	ug/l	lb/d			
2 Nitrophenol 75 5)	X			ND						1	ug/l	lb/d			
4 Nitrophenol 02-7)	X			ND						1	ug/l	lb/d			
P Chloro M- ol (59 50-7)	X			ND						1	ug/l	lb/d			
Pentachloro- ol (87 86 5)	X			ND						1	ug/l	lb/d			
Phenol 96 2)	X			< 2.0	< .02					1	ug/l	lb/d			
2,4,6 Tri- ophenol 06 2)	X			ND						1	ug/l	lb/d			

POLLUTANT AND CAS NUMBER (If available)	2. MARK "X" a. TEST INCLUDED	b. BELIEVED PRESENT	c. BELIEVED ABSENT	3. EFFLUENT a. DAILY VALUE (1) CONCENTRATION	(2) MASS	b. MAXIMUM 30 DAY VALUE (if available) (1) CONCENTRATION	(2) MASS	c. LONG TERM AVRG. VALUE (if available) (1) CONCENTRATION	(2) MASS	d. NO. OF ANALYSES	4. UNITS a. CONCENTRATION	b. MASS	5. INTAKE (optional) a. LONG TERM AVERAGE VALUE (1) CONCENTRATION	(2) MASS	b. NO. OF ANALYSES
GC/MS FRACTION – BASE/NEUTRAL COMPOUNDS															
1B. Acenaphthene (83-32-9)	X			<10	<0.1					1	ug/l	lb/d	See Intake 050		
2B. Acenaphtylene (208-96-8)	X			ND						1	ug/l	lb/d			
3B. Anthracene (120-12-7)	X			ND						1	ug/l	lb/d			
4B. Benzidine (92-87-5)	X			ND						1	ug/l	lb/d			
5B. Benzo (a) Anthracene (56-55-3)	X			ND						1	ug/l	lb/d			
6B. Benzo (a) Pyrene (50-32-8)	X			ND						1	ug/l	lb/d			
7B. 3,4-Benzo-fluoranthene (205-99-2)	X			ND						1	ug/l	lb/d			
8B. Benzo (ghi) Perylene (191-24-2)	X			ND						1	ug/l	lb/d			
9B. Benzo (k) Fluoranthene (207-08-9)	X			ND						1	ug/l	lb/d			
10B. Bis (2-Chloro-ethoxy) Methane (111-91-1)	X			ND						1	ug/l	lb/d			
11B. Bis (2-Chloro-ethyl) Ether (111-44-4)	X			ND						1	ug/l	lb/d			
12B. Bis (2-Chloro-isopropyl) Ether (39638-32-9)	X			ND						1	ug/l	lb/d			
13B. Bis (2-Ethyl-hexyl) Phthalate (117-81-7)	X			35.5	0.36					1	ug/l	lb/d			
14B. 4-Bromo-phenyl Phenyl Ether (101-55-3)	X			ND						1	ug/l	lb/d			
15B. Butyl Benzyl Phthalate (85-68-7)	X			ND						1	ug/l	lb/d			
16B. 2-Chloro-naphthalene (91-58-7)	X			<10	<0.1					1	ug/l	lb/d			
17B. 4-Chloro-phenyl Phenyl Ether (7005-72-3)	X			ND						1	ug/l	lb/d			
18B. Chrysene (218-01-9)	X			ND						1	ug/l	lb/d			
19B. Dibenzo (a,h) Anthracene (53-70-3)	X			ND						1	ug/l	lb/d			
20B. 1,2-Dichloro-benzene (95-50-1)	X			ND						1	ug/l	lb/d			
21B. 1,3-Dichloro-benzene (541-73-1)	X			ND						1	ug/l	lb/d			

CONTINUE ON PAGE V

CONTINUED FROM PAGE V-6 | M... 05...432 | 121 | Form Approved OMB No. 158-R0173

POLLUTANT AND CAS NUMBER (if available)	2. MARK "X" a. TESTING REQUIRED	b. BELIEVED PRESENT	c. BELIEVED ABSENT	3. EFFLUENT a. DAILY VALUE (1) CONCENTRATION	(2) MASS	b. MAXIMUM 30 DAY VALUE (if available) (1) CONCENTRATION	(2) MASS	c. LONG TERM AVRG. VALUE (if available) (1) CONCENTRATION	(2) MASS	d. NO. OF ANALYSES	4. UNITS a. CONCENTRATION	b. MASS	5. INTAKE (optional) a. LONG TERM AVERAGE VALUE (1) CONCENTRATION	(2) MASS	b. NO. OF ANALYSES
C/MS FRACTION — BASE/NEUTRAL COMPOUNDS (continued)															
B. 1,4 Dichlorobenzene (106-46-7)	X			ND						1	ug/l	lb/d	See Intake 050		
B. 3,3'-Dichlorobenzidine (1-94-1)	X			<10	<0.1					1	ug/l	lb/d			
B. Diethyl Phthalate (4-66-2)	X			<10	<0.1					1	ug/l	lb/d			
B. Dimethyl Phthalate (31-11-3)	X			ND						1	ug/l	lb/d			
B. Di N-Butyl Phthalate (4-74-2)	X			ND						1	ug/l	lb/d			
B. 2,4-Dinitrotoluene (121-14-2)	X			ND						1	ug/l	lb/d			
B. 2,6 Dinitrotoluene (606-20-2)	X			ND						1	ug/l	lb/d			
B. Di N-Octyl Phthalate (17-84-0)	X			12.8	0.13					1	ug/l	lb/d			
B. 1,2-Diphenylhydrazine (as Azobenzene) (122-66-7)	X			ND						1	ug/l	lb/d			
B. Fluoranthene (06-44-0)	X			ND						1	ug/l	lb/d			
B. Fluorene (8-73-7)	X			<10	<0.1					1	ug/l	lb/d			
B. Hexachlorobenzene (18-71-1)	X			ND						1	ug/l	lb/d			
B. Hexachlorobutadiene (7-68-3)	X			ND						1	ug/l	lb/d			
B. Hexachlorocyclopentadiene (7-47-4)	X			ND						1	ug/l	lb/d			
B. Hexachlorobenzene (67-72-1)	X			ND						1	ug/l	lb/d			
B. Indeno (2,3 cd) Pyrene (93-39-5)	X			ND						1	ug/l	lb/d			
B. Isophorone (3-59-1)	X			ND						1	ug/l	lb/d			
B. Naphthalene (1-20-3)	X			ND						1	ug/l	lb/d			
B. Nitrobenzene (3-95-3)	X			ND						1	ug/l	lb/d			
B. N Nitrodimethylamine (2-75-9)	X			ND						1	ug/l	lb/d			
B. N Nitrosodi-Propylamine (21-64-7)	X			ND						1	ug/l	lb/d			

1. POLLUTANT AND CAS NUMBER (if available)	2. MARK "X"			3. EFFLUENT							4. UNITS		5. INTAKE (optional)		
	a. TESTING REQUIRED	b. BELIEVED PRESENT	c. BELIEVED ABSENT	a. MAXIMUM DAILY VALUE (1) CONCENTRATION	a. MAXIMUM DAILY VALUE (2) MASS	b. MAXIMUM 30 DAY VALUE (if available) (1) CONCENTRATION	b. MAXIMUM 30 DAY VALUE (if available) (2) MASS	c. LONG TERM AVRG. VALUE (if available) (1) CONCENTRATION	c. LONG TERM AVRG. VALUE (if available) (2) MASS	d. NO OF ANALYSES	a. CONCENTRATION	b. MASS	a. LONG TERM AVERAGE VALUE (1) CONCENTRATION	a. LONG TERM AVERAGE VALUE (2) MASS	b. NO OF ANALYSES
GC/MS FRACTION – BASE/NEUTRAL COMPOUNDS *(continued)*															
43B. N Nitrosodiphenylamine (86 30 6)	X			ND						1	ug/l	lb/d	See Intake 050		
44B. Phenanthrene (85 01-8)	X			ND						1	ug/l	lb/d			
45B. Pyrene (129 00 0)	X			ND						1	ug/l	lb/d			
46B. 1,2,4-Trichlorobenzene (120 82-1)	X			ND						1	ug/l	lb/d			
GC/MS FRACTION – PESTICIDES															
1P. Aldrin (309 00 2)			X												
2P. α BHC (319 84 6)			X												
3P. β BHC (319 85-7)			X												
4P. γ BHC (58 89 9)			X												
5P. δ BHC (319 86 8)			X												
6P. Chlordane (57-74 9)			X												
7P. 4,4'-DDT (50 29 3)			X												
8P. 4,4'-DDE (72 55 9)			X												
9P. 4,4'-DDD (72 54 8)			X												
10P. Dieldrin (60 07-1)			X												
11P. α Endosulfan (115 29-7)			X												
12P. β Endosulfan (115 29-7)			X												
13P. Endosulfan sulfate (1031 07-8)			X												
14P. Endrin (72 20 8)			X												
15P. Endrin aldehyde (421 93 4)			X												
16P. Heptachlor (76 44 8)			X												

CONTINUE ON PAGE V-9

CONTINUED FROM PAGE V-8

EPA I.D. NUMBER (copy from Item 1 of Form 1)	OUTFALL NUMBER
MDD 053945432	121

Form Approved OMB No. 168 R0173

1. POLLUTANT AND CAS NUMBER (If available)	2. MARK "X" a. Testing Required	b. Believed Present	c. Believed Absent	3. EFFLUENT a. MAXIMUM DAILY VALUE (1) Concentration	(2) Mass	b. MAXIMUM 30 DAY VALUE (If available) (1) Concentration	(2) Mass	c. LONG TERM AVRG. VALUE (If available) (1) Concentration	(2) Mass	d. NO. OF ANALYSES	4. UNITS a. Concentration	b. Mass	5. INTAKE (optional) a. LONG TERM AVERAGE VALUE (1) Concentration	(2) Mass	b. NO. OF ANALYSES
GC/MS FRACTION – PESTICIDES (continued)															
17P. Heptachlor Epoxide (1024 57-3)			X										See Intake 050		
18P. PCB-1242 (53469 21 9)			X												
19P. PCB-1254 (11097-69 1)			X												
20P. PCB-1221 (11104-28-2)			X												
21P. PCB-1232 (11141-16-5)			X												
22P. PCB-1248 (12672-29-6)			X												
23P. PCB-1260 (11096 82-5)			X												
24P. PCB-1016 (12674-11-2)			X												
25P. Toxaphene (8001-35-2)			X												

APPENDIX B

Copies of Relevant Permits

The ERM Group

List of Permits

- NPDES Discharge Permit
- Air Permits
  - Permit to Operate "A" Coke Oven Battery
  - Permit to Operate Coke Oven Batteries 11 & 12
  - Permit to Operate Claus Sulfur Recovery Plant
  - Application for Permit to Operate "A" and "B" Coal Chemical Plants

State of Maryland

OFFICE OF ENVIRONMENTAL PROGRAMS

DEPARTMENT OF HEALTH AND MENTAL HYGIENE

201 WEST PRESTON STREET • BALTIMORE, MARYLAND 21201 • Area Code 301 • 383-[illegible]

Adele Wilcox, R.N., M.S., Secretary

Harry Hughes, Governor

DISCHARGE PERMIT

State Discharge Permit Number	79-DP-0064
NPDES Permit Number	MD0001201
Effective Date	October 10, 1985
Expiration Date	October 10, 1990

Pursuant to the provisions of Title 9 of the Health-Environmental Article, Annotated Code of Maryland and regulations promulgated thereunder and the provisions of the Clean Water Act, 33 U.S.C. §1251 et seq. and implementing regulations 40 C.F.R. Parts 122, 123, 124 and 125, the Department of Health and Mental Hygiene, hereinafter referred to as "DHMH" hereby authorizes

Bethlehem Steel Corporation
Bethlehem, PA 18016

TO DISCHARGE FROM

an integrated steel plant

LOCATED AT

Sparrows Point, Baltimore County, Maryland 21219

VIA OUTFALLS

001-006, 012-019, 021, 022, 030, 032-045, 053-059, 062, 063, 065, 066, and 068-072 as identified herein

TO

Patapsco River, Bear Creek and Old Road Bay which are classified for water contact recreation, for fish, other aquatic life and wildlife

in accordance with the following special and general conditions, and map made a part hereof.

I. Special Conditions

A1. EFFLUENT LIMITATIONS AND MONITORING REQUIREMENTS

Beginning on the effective date of the permit and lasting through the expiration date the permittee is authorized to discharge from outfall number 001 consisting of process waste from sinter plant and blast furnaces, noncontact cooling water, gas loop seals, miscellaneous.

Such discharge shall be limited and monitored at outfall monitoring building by the permittee as specified below:

Constituent	Effluent Limitations (lbs/day)		Other Units (Specify)		Monitoring Requirements	
	Monthly Avg.	Daily Max.	Monthly Avg.	Daily Max.	Measurement Frequency	Sample Type
Flow	N/A	N/A	*	*	1/Week	Calculated
Temperature	N/A	N/A	*	*	Continuous	Recorded
Ammonia as N	*	*	*	*	**	24 Hr. Comp.
Phenol (4AAP)	*	*	*	*	**	24 Hr. Comp.

The pH shall not be less than 6.0 nor greater than 9.0 and shall be monitored and recorded continuously.

Excursions to this range are allowed as follows: 1) the total of all excursions in any calendar month shall not exceed 7 hours and 26 minutes; and 2) no excursion shall last for more than 60 minutes.

There shall be no discharge of floating solids or persistent foam in other than trace amounts. Persistent foam is foam that does not dissipate within one-half hour of point of discharge.

*Monitoring required without limits.

**1/Week for 1 year. After 1 year following the date on which the final effluent limitations become effective, the monitoring frequency may be reduced to 1/month, provided that the permittee demonstrates that these pollutants are present at consistently low levels with respect to background and that allowed at 101. If significant levels of these pollutants are found to be present, permittee will initiate a program to identify the sources of contamination and minimize contamination of this discharge.

I. Special Conditions

A2. EFFLUENT LIMITATIONS AND MONITORING REQUIREMENTS

Beginning on the effective date of the permit and lasting through the expiration date the permittee is authorized to discharge from outfall number 001-monitoring point 101 consisting of the discharge from the wastewater treatment facility for the blast furnaces and sinter plant.

Such discharge shall be limited as specified below:

Constituent	Effluent Limitations (lbs/day)		Other Units (Specify)		Monitoring Requirements	
	Monthly Avg.	Daily Max.	Monthly Avg.	Daily Max.	Measurement Frequency	Sample Type
Flow	N/A	N/A	*	*	Continuous	Recorded
Total Suspended Solids (1)	1373 lb/day	4127 lb/day	*	*	2/Week	24 Hr. Comp.
Ammonia as N	205 lb/day (2)	615 lb/day (2)	*	*	2/Week	24 Hr. Comp.
Total Cyanide (1)	61.8 lb/day	122.7 lb/day	*	*	2/Week	24 Hr. Comp.
Phenol (4AAP)	2.1 lb/day (2)	4.1 lb/day (2)	*	*	2/Week	24 Hr. Comp.
Oil & Grease (1)	204.9 lb/day	616 lb/day	*	*	2/week	3 Grabs in 24 Hr.
Total Lead	6.2 lb/day	18.5 lb/day	*	*	2/Week	24 Hr. Comp.
Total Zinc (1)	21.8 lb/day	63.7 lb/day	*	*	2/Week	24 Hr. Comp.
GC/MS Acid Fraction Organics (3)	*	*	*	*	1/Quarter	24 Hr. Comp.

*Monitoring required without limits.

(1) Permittee is allowed net credits as specified in this note and note B. Permittee shall sample the incoming industrial water for each of these parameters at the same frequency as for the effluent. The net effluent concentration shall be determined by subtracting (the influent concentration x net allowance) from the actual effluent concentration. Net effluent loadings shall be determined by multiplying flow (MGD) x 8.34 x net effluent concentration. The net allowances to be used are: TSS - 0.8; O & G - 0.7; Cr - 0.4; Pb - 0.3; Zn - 0.4; and CN - 0.75.

(2) Permittee has requested a 301(g) variance for these pollutants. EPA has decided to stay the BAT limits pursuant to Section 301(j) of the Clean Water Act. Should the waiver be granted, the alternate limitations would be: ammonia - 1634 lb/day average; 4571 lb/day maximum; and phenol - 22 lb/day average, 57 lb/day maximum. Until the expiration of the stay, the permittee must comply with the alternate limits.

(3) This requirement is only effective if and when a Section 301 (g) variance for phenol (4AAP) is granted.

Notes: A. For all parameters which have net limits, the gross effluent data shall be summarized and reported quarterly.

I. Special Conditions

A3. EFFLUENT LIMITATIONS - 101

Note: B. The net limitations allowed above will remain in effect for one year following the date on which the final permit limitations become effective (See Consent Decree). During this time period, permittee may elect to demonstrate whether any net effluent limitations are appropriate and to what extent they should be applied. Should permittee elect not to demonstrate or otherwise fail to demonstrate that net effluent limitations are appropriate within six months after the date on which the final limitations become effective, the final effluent limitations provided in the permit shall, after the one year time period, be applied on a gross basis. If the permittee elects to demonstrate the net credit should be extended, the net limitations will remain in effect until the Department determines whether or not to accept the request for extended net credit.

I. Special Conditions

B. EFFLUENT LIMITATIONS AND MONITORING REQUIREMENTS

Beginning on the effective date of the permit and lasting through the expiration date the permittee is authorized to discharge from outfall number 012 consisting of noncontact cooling water from various operations plus blast furnance gas main loop seals contact water, fuel oil tank farm dike drainage contact water, coke oven gas main drip legs, and emergency sanitary sewage pumping station overflow.

Such discharge shall be limited and monitored at the outfall monitoring building by the permittee as specified below:

Constituent	Effluent Limitations (lbs/day)		Other Units (Specify)		Monitoring Requirements	
	Monthly Avg.	Daily Max.	Monthly Avg.	Daily Max.	Measurement Frequency	Sample Type
Flow	N/A	N/A	*	*	2/Week	Estimate
Temperature	N/A	N/A	*	*	Continuous	Recorded
Oil & Grease	N/A	N/A	15 mg/l	30 mg/l	1/Month	Avg. of 3 Grabs/24 Hr.
Total Suspended Solids	N/A	N/A	30 mg/l	60 mg/l	1/Month	24 Hr. Comp.
Phenol (4AAP)	N/A	N/A	*	*	1/Week**	24 Hr. Comp.
Ammonia as N	N/A	N/A	*	*	1/Month	24 Hr. Comp.
CN (Total)	N/A	N/A	*	*	1/Month	24 Hr. Comp.

The pH shall not be less than 6.0 nor greater than 9.0 and shall be monitored and recorded continuously.

Excursions to this range are allowed as follows: 1) the total of all excursions in any calendar month shall not exceed 7 hours and 26 minutes; and 2) no excursion shall last for more than 60 minutes.

There shall be no discharge of floating solids or persistent foam in other than trace amounts. Persistent foam is foam that does not dissipate within one-half hour of point of discharge.

*Monitoring required without limits.

**1/Week for 6 consecutive months. Upon demonstration that the phenols (4AAP) are at consistently low levels with respect to background levels, the monitoring frequency will be reduced to 1/month. If significant levels of phenols (4AAP) are found to be present, permittee will initiate a program to identify the sources of contamination and minimize contamination of this discharge.

I. Special Conditions

C. EFFLUENT LIMITATIONS AND MONITORING REQUIREMENTS

Beginning on the effective date of the permit and lasting through the expiration date the permittee is authorized to discharge from outfall number 013 consisting of noncontact cooling water from various hot forming operations plus blast furnance gas main loop seals contact water, sanitary sewage pumping station emergency overflow and stormwater runoff.

Such discharge shall be limited and monitored at the outfall monitoring building by the permittee as specified below:

Constituent	Effluent Limitations (lbs/day)		Other Units (Specify)		Monitoring Requirements	
	Monthly Avg.	Daily Max.	Monthly Avg.	Daily Max.	Measurement Frequency	Sample Type
Flow	N/A	N/A	*	*	Continuous	Recorded
Temperature	N/A	N/A	*	*	Continuous	Recorded
Oil & Grease	N/A	N/A	*	*	1/Month	Avg. of 3 Grabs/24 Hr.
Total Suspended Solids	N/A	N/A	*	*	1/Month	24 Hr. Comp.
Phenol (4AAP)	N/A	N/A	*	*	1/Week**	24 Hr. Comp.
Ammonia (as N)	N/A	N/A	*	*	1/Month	24 Hr. Comp.
Total Cyanide	N/A	N/A	*	*	1/Month	24 Hr. Comp.

The pH shall not be less than 6.0 nor greater than 9.0 and shall be monitored and recorded continuously.

Excursions to this range are allowed as follows: 1) the total of all excursions in any calendar month shall not exceed 7 hours and 26 minutes; and 2) no excursion shall last for more than 60 minutes.

There shall be no discharge of floating solids or persistent foam in other than trace amounts. Persistent foam is foam that does not dissipate within one-half hour of point of discharge.

*Monitoring required without limits.

**1/Week for 6 consecutive months. Upon demonstration that the phenols (4AAP) are at consistently low levels with respect to background levels, the monitoring frequency will be reduced to 1/month. If significant levels of phenols (4AAP) are found to be present, permittee will initiate a program to identify the sources of contamination and minimize contamination of this discharge.

I. Special Conditions

D1. EFFLUENT LIMITATIONS AND MONITORING REQUIREMENTS

Beginning on the effective date of the permit and lasting through the expiration date[1] the permittee is authorized to discharge from outfall number 014 consisting of Humphrey's Creek Treatment Plant effluent.

Such discharge shall be limited and monitored at effluent sump by the permittee as specified below:

Constituent	Effluent Limitations (lbs/day)		Other Units (Specify)		Monitoring Requirements	
	Monthly Avg.	Daily Max.	Monthly Avg.	Daily Max.	Measurement Frequency	Sample Type
Flow	N/A	N/A	*	*	Continuous	Recorded
Total Suspended Solids (2)	16656 lb/day	43359 lb/day	*	*	5/Week (3)	24 Hr. Comp.
Oil & Grease (2)	5388 lb/day	11498 lb/day	*	*	5/Week (3)	3 grabs in 24 Hr. Period
Total Zinc (2)	73.1 lb/day	171.4 lb/day	*	*	5/Week (3)	24 Hr. Comp.
Total Chromium (2)	59.7 lb/day	114.8 lb/day	*	*	5/Week (3)	24 Hr. Comp.
Total Lead (2)	31.8 lb/day	78.8 lb/day	*	*	5/Week (3)	24 Hr. Comp.
Naphthalene	N/A	3.1 lb/day	N/A	*	1/Month (4)	24 Hr. Comp.
Tetrachloroethylene	N/A	4.66 lb/day	N/A	*	1/Month (4)	24 Hr. Comp.
Total Ammonia as N	*	*	*	*	1/Month	24 Hr. Comp.
Dissolved Oxygen	N/A	N/A	N/A	4.0 mg/l min.	Continuous	Recorded
Free Cyanide	18.2	44	*	*	2/Week	24 Hr. Comp.

(1) This date will be earlier of: a) the expiration date shown on the cover page; or b) the date when Back River Sewage Treatment Plant has completed the required improvements for the wastewater sent to Bethlehem Steel.

(2) Permittee is allowed net credits as specified in this note and note B. Permittee shall sample the incoming industrial water for each of these parameters at the same frequency as for the effluent. The net effluent concentration shall be determined by subtracting (the influent concentration x net allowance) from the acutal effluent concentration. Net effluent loadings shall be determined by multiplying flow (MGD) x 8.34 x net effluent concentration. The net allowances to be used are: TSS - 0.8; O&G - 0.7; Cr-0.4; Pb - 0.3; and Zn - 0.4.

(3) After 1 year following the date on which the final limitations become effective, the monitoring frequency may be reduced to 2/week, provided permittee has consistently complied with the effluent limitations.

(4) After 1 year following the date of which the final limitations become effective, the monitoring frequency may be reduced to 1/quarter, provided permittee has consistently complied with the effluent limitations.

*Monitoring required without limits.

I. Special Conditions

D1. LIMITS FOR 014 (continue)

The pH shall not be less than 6.0 nor greater than 9.0 and shall be recorded continuously.

Excursions to this range are allowed as follows: 1) the total of all excursions in any calendar month shall not exceed 7 hours and 26 minutes; and 2) no excursion shall last for more than 60 minutes.

There shall be no discharge of floating solids or persistent foam in other than trace amounts. Persistent foam is foam that does not dissipate within one-half of point of discharge.

Notes: A. For all parameters which have net limits, the gross effluent data shall be summarized and reported quarterly.

B. The net limitations allowed above will remain in effect for one year following the date on which the final permit limitations become effective (See Consent Decree). During this time period, the permittee may elect to demonstrate whether any net effluent limitations including net limitations on naphthalene and tetrachloroethylene are appropriate and to what extent they should be applied. Should the permittee elect not to demonstrate or otherwise fail to demonstrate within one year after the date on which the final limitations become effective that net effluent limitations are appropriate, the final effluent limitations provided in the permit shall, after the one year time period, be applied on a gross basis. If the permittee elects to demonstrate that net credit should be extended, the net limitations will remain in effect until the Department determines whether or not to accept the request for extended net credit.

I. Special Conditions

D2. SPECIAL FINAL EFFLUENT LIMITATIONS AND MONITORING REQUIREMENTS - To be in effect only if Back River STP has completed the required improvements for the wastewater sent to Bethlehem Steel prior to this permit's expiration date.

Beginning on the date of completion of the improvements mentioned above and lasting through the expiration date the permittee is authorized to discharge from outfall number 014 consisting of Humphreys Creek Treatment Plant effluent.

Such discharge shall be limited and monitored at effluent sump by the permittee as specified below:

Constituent	Effluent Limitations (lbs/day)		Other Units (Specify)		Monitoring Requirements	
	Monthly Avg.	Daily Max.	Monthly Avg.	Daily Max.	Measurement Frequency	Sample Type
Flow	N/A	N/A	*	*	Continuous	Recorded
Total Suspended Solids (1)	16656 lb/day	43359 lb/day	*	*	2/Week	24 Hr. Comp.
Oil & Grease (1)	5388 lb/day	11498 lb/day	*	*	2/Week	3 Grabs In 24 Hr. Period
Total Zinc (1)	73.1 lb/day	171.4 lb/day	*	*	2/Week	24 Hr. Comp.
Total Chromium (1)	59.7 lb/day	114.8 lb/day	*	*	2/Week	24 Hr. Comp.
Total Lead (1)	31.8 lb/day	78.8 lb/day	*	*	2/Week	24 Hr. Comp.
Free Cyanide	18.2 lb/day	44 lb/day	*	*	2/Week	24 Hr. Comp.
Naphthalene	N/A	3.1 lb/day	N/A	*	1/Quarter	24 Hr. Comp.
Tetrachloroethylene	N/A	4.66 lb/day	N/A	*	1/Quarter	24 Hr. Comp.
$BOD_{(5)}$ (5/1-10/31)	N/A	N/A	20 mg/l	N/A	2/Week	24 Hr. Comp.
$BOD_{(5)}$ (11/1-4/30)	N/A	N/A	30 mg/l	N/A	2/Week	24 Hr. Comp.
Total Kjeldahl Nitrogen						
(5/1-10/31)	N/A	N/A	3 mg/l	N/A	2/Week	24 Hr. Comp.
(11/1-4/30)	N/A	N/A	N/A	N/A	2/Week	24 Hr. Comp.
Total Phosphorus	N/A	N/A	2 mg/l	N/A	2/Week	24 Hr. Comp.
Dissolved Oxygen	N/A	N/A	5.0 mg/l min.		Continuous	Recorded
Total Residual Chlorine	N/A	N/A	N/A	0.2 mg/l	2/Week	Grab
Fecal Coliform	N/A	N/A	200 MPN/100 ml max.		2/Week	Grab

(1) Permittee is allowed net credits as specified in this note and note B. Permittee shall sample the incoming industrial water for each of these parameters at the same frequency as for the effluent. The net effluent concentration shall be determined by subtracting (the influent concentration x net allowance) from the actual effluent concentration. Net effluent loadings shall be determined by multiplying flow (MGD) x 3.34 x net effluent concentration. The net allowances to be used are: TSS - 0.8; O&G - 0.7; Cr - 0.4; Pb - 0.3; and Zn - 0.4.

*Monitoring required without limits.

I. Special Conditions

D2. SPECIAL FINAL LIMITS FOR 014 (continue)

The pH shall not be less than 6.0 nor greater than 9.0 and shall be recorded continuously. Excursions to this range are allowed as follows: 1) the total of all excursions in any calendar month shall not exceed 7 hours and 26 minutes; and 2) no excursion shall last for more than 60 minutes.

Notes:

A. For all parameters which have net limits, the gross effluent data shall be summarized and reported quarterly.

B. The net effluent limitations allowed above will remain in effect for one year following the date on which the special final permit limitations become effective. During this time period, the permittee may elect to demonstrate whether any net effluent limitations including net limitations on naphthalene and tetrachloroethylene are appropriate and to what extent they should applied. Should the permittee elect not to demonstrate or otherwise fail to demonstrate that net effluent limitations are appropriate within one year after the date on which the final limits become effective, the special final effluent limitations shall, after the one year time period, be applied on a gross basis. If the permittee elects to demonstrate that net credit should be extended, the net limitations will remain in effect until the Department determines whether or not to accept the request for extended net credit.

I. Special Conditions

E. EFFLUENT LIMITATIONS AND MONITORING REQUIREMENTS

Beginning on the effective date of the permit and lasting through the expiration date the permittee is authorized to discharge from outfall number 017 consisting of noncontact cooling water from various hot or cold forming operations plus contact water from plant garages, fire and police station and southend of cold sheet mill, emergency overflow from sanitary sewage pumping station and stormwater runoff.

Such discharge shall be limited and monitored down stream of oil baffle by the permittee as specified below:

Constituent	Effluent Limitations (lbs/day)		Other Units (Specify)		Monitoring Requirements	
	Monthly Avg.	Daily Max.	Quarterly Avg.	Daily Max.	Measurement Frequency	Sample Type
Flow	N/A	N/A	*	*	1/Month	Estimated
Temperature	N/A	N/A	*	*	1/Month	I-S
Oil & Grease	N/A	N/A	15 mg/l	30 mg/l	1/Month	Grab
Total Suspended Solids	N/A	N/A	30 mg/l	60 mg/l	1/Month	Grab

The pH shall not be less than 6.0 nor greater than 9.0 and shall be monitored once per month by grab sample.

There shall be no discharge of floating solids or persistent foam in other than trace amounts. Persistent foam is foam that does not dissipate within one-half hour of point of discharge.

*Monitoring required without limits.

I. Special Conditions

F. EFFLUENT LIMITATIONS AND MONITORING REQUIREMENTS

Beginning on the effective date of the permit and lasting through the expiration date the permittee is authorized to discharge from outfall number 018 consisting of noncontact cooling water and scale pit emergency overflow from No. 3 rod mill area, sanitary sewage pumping station emergency overflow and stormwater runoff.

Such discharge shall be limited and monitored at end of pipe by the permittee as specified below:

Constituent	Effluent Limitations (lbs/day)		Other Units (Specify)		Monitoring Requirements	
	Monthly Avg.	Daily Max.	Quarterly Avg.	Daily Max.	Measurement Frequency	Sample Type
Flow	N/A	N/A	*	*	1/Month	Estimate
Temperature	N/A	N/A	*	*	1/Month	I-S
Total Suspended Solids	N/A	N/A	*	*	1/Month	Grab
Oil & Grease	N/A	N/A	*	*	1/Month	Grab

The pH shall not be less than 6.0 nor greater than 9.0 and shall be monitored once per month by grab sample.

There shall be no discharge of floating solids or persistent foam in other than trace amounts. Persistent foam is foam that does not dissipate within one-half hour of point of discharge.

*Monitoring required without limits.

1. Special Conditions

G1. EFFLUENT LIMITATIONS AND MONITORING REQUIREMENTS

Beginning on the effective date of the permit and lasting through the expiration date the permittee is authorized to discharge from outfall number 021 consisting of coke oven area discharge.

Such discharge shall be limited and monitored at outfall monitoring building by the permittee as specified below:

Constituent	Effluent Limitations (lbs/day)		Other Units (Specify)		Monitoring Requirements	
	Monthly Avg.	Daily Max.	Monthly Avg.	Daily Max.	Measurement Frequency	Sample Type
Flow	N/A	N/A	*	*	Continuous	Recorded
Ammonia as N	N/A	N/A	*	*	**	24 Hr. Comp.
Phenol (4AAP)	N/A	N/A	*	*	**	24 Hr. Comp.
Temperature	N/A	N/A	*	*	Continuous	Recorded

The pH shall not be less than 6.0 nor greater than 9.0 and shall be monitored and recorded continuously. Excursions to this range are allowed as follows: 1) the total of all excursions in any calendar month shall not exceed 7 hours and 26 minutes; and 2) no excursion shall last for more than 60 minutes.

There shall be no discharge of floating solids or persistent foam in other than trace amounts. Persistent foam is foam that does not dissipate within one-half hour of point of discharge.

*Monitoring required without limits.

**1/Week. After 1 year following the date on which the final effluent limitations become effective, the monitoring frequency may be reduced to 1/month, provided the permittee demonstrates that these pollutants are present at consistently low levels with respect to background and that allowed at 121. If significant levels of these pollutants are found to be present, the permittee will initiate a program to identify the sources of contamination and minimize contamination of this discharge.

I. Special Conditions

G2. EFFLUENT LIMITATIONS AND MONITORING REQUIREMENTS

Beginning on the effective date of the permit and lasting through the expiration date the permittee is authorized to discharge from outfall number 021 monitoring point 121 consisting of coke ovens wastewater.

Such discharge shall be limited and monitored at discharge from coke oven wastewater treatment plant to outfall 021 by the permittee as specified below:

Constituent	Effluent Limitations (lbs/day)		Other Units (Specify)		Monitoring Requirements	
	Monthly Avg.	Daily Max.	Monthly Avg.	Daily Max.	Measurement Frequency	Sample Type
Flow	N/A	N/A	*	*	Continuous	Recorded
Total Suspended Solids	2837 lb/day	5481 lb/day	*	*	2/Week	24 Hr. Comp.
Oil & Grease	N/A	708 lb/day	N/A	*	2/Week	3 Grabs in a 24 Hr. period
Phenols (4AAP)	0.69 lb/day (1)	1.38 lb/day (1)	*	*	5/Week	24 Hr. Comp.
Ammonia as N	346.4 lb/day (1)	1176.4 lb/day (1)	*	*	2/Week	24 Hr. Comp.
Total Cyanide	75.8 lb/day	138 lb/day	*	*	2/Week	24 Hr. Comp.
Benzene	N/A	0.69 lb/day	N/A	*	1/Month**	24 Hr. Comp.
Naphthalene	N/A	0.69 lb/day	N/A	*	1/Month**	24 Hr. Comp.
Benzo(a)pyrene	N/A	0.69 lb/day	N/A	*	1/Month**	24 Hr. Comp.
GC/MS Acid Fraction Organics (2)	N/A	N/A	N/A	*	1/Month**	24 Hr. Comp.

The pH shall be monitored twice per week by grab sample, but shall not be limited at this point.

*Monitoring required without limits.

**After 1 year following the date on which the final effluent limitations become effective, the monitoring frequency may be reduced to 1/quarter, provided that permittee has consistently complied with the effluent limitations.

(1) Permittee has requested a 301(g) variance for these pollutants. EPA has decided to stay the BAT limits pursuant to Section 301(j) of the Clean Water Act. Should the waiver be granted, the alternate limitations would be: ammonia - 1968 lb/day average; 4724 lb/day maximum; and phenol - 2.9 lb/day average, 8.7 lb/day maximum. Until the expiration of the stay, the permittee must comply with the alternate limits.

(2) This requirement is only effective if and when a Section 301(g) variance for phenol (4AAP) is granted.

I. Special Conditions

H. OTHER OUTFALLS

Permittee is authorized to discharge the following from the outfalls listed below:

Outfall	Description
002	Stormwater runoff only
003	Stormwater runoff only
004	Stormwater runoff only
005	Stormwater runoff only
006	Stormwater runoff only
015	Emergency by-pass of process water from rod, wire, and pipe mills (normally to 014)
016	Stormwater runoff plus steam condensate (fuel oil tank heaters)
019	Stormwater runoff plus ground water from springs in area
022	Stormwater runoff only
030	Stormwater runoff plus steam condensate (heaters)
032	Stormwater runoff plus steam condensate (heaters) plus noncontact cooling water (air conditioners)
033	Stormwater runoff only
034	Steam condensate (heaters) only
035	Saltwater standpipe emergency overflow
036	Steam condensate (central saltwater pumping station)
037	Steam condensate (central saltwater pumping station)
038	Steam condensate (central saltwater pumping station)
039	Stormwater runoff only
040	Stormwater runoff only
041	Stormwater runoff only plus safety hose

I. Special Conditions

H. OTHER OUTFALLS (continue)

Outfall	Description
042	Steam concensate (heaters) only
043	Stormwater runoff only
044	Sanitary sewage pumping station emergency overflow
045	Stormwater runoff only
053	Stormwater runoff only
054	Stormwater runoff only
055	Stormwater runoff only
056	Stormwater runoff only
057	Sanitary sewage pumping station emergency overflow
058	Stormwater runoff only
059	Stormwater runoff only
062	Drinking fountain (Penwood Wharf offices)
063	Laboratory and janitor washbasins (Penwood Wharf offices)
065	Stormwater runoff plus emergency overflow (sanitary sewage pumping station)
066	Floor drains in boiler room (Penwood Wharf offices)
068	Stormwater runoff only
069	Stormwater runoff plus ground water from springs in area
070	Stormwater runoff plus ground water from springs in area
071	Stormwater runoff plus ground water from springs in area
072	Stormwater runoff only

For each of these outfalls handling stormwater runoff, a grab sample shall be taken once per year during a wet weather discharge. This sample shall be analyzed for oil and grease, total suspended solids, and pH.

I. Special Conditions

I. DEFINITIONS

1. The "monthly, quarterly, semi-annual or annual average effluent limitation by concentration means the arithmetic mean of all the daily determinations of concentration made during any calendar month, 3 month, 6 month or 12 month period, respectively.

2. The "daily maximum" effluent limitation by concentration means the highest allowable reading of any daily determination of concentration.

3. "Daily determination of concentration" means one analysis performed on any given sample representing 24 hours flow, with one number in mg/l as an outcome.

4. The "monthly, quarterly, semi-annual or annual average" effluent limitation by mass loading means the arithmetic mean of all the daily determinations of discharge of a constituent by mass loading made during any calendar month, 3 month, 6 month or 12 month period, respectively.

5. The "daily maximum" effluent limitation by mass loading means the highest allowable daily determination of discharge of a constituent by mass loading during a 24-hour period.

6. "Daily determination of discharge of constituents by mass loading" means a value which is calculated by multiplying the daily determination of concentration times flow in millions of gallons per day times 8.34. This results in a mass loading expressed in pounds per day. The flow is the total volume discharged during a day which is obtained from a totalizer reading for 24 hours. In the absence of a totalizer, the flow per day must be estimated. The instantaneous flow is a flow rate and shall not be confused with the total flow per 24 hours. The outcome is one number in lbs/day of any constituent.

7. "Grab Sample" means an individual sample collected in less than 15 minutes.

8. "Composite Sample" means a combination of individual samples obtained at least at hourly intervals over a time period. Either the volume of each individual sample is proportional to discharge flow rates or the sampling interval (for constant volume samples) is proportional to the flow rates over the time period used to produce the composite.

I. Special Conditions

I. DEFINITIONS (continue)

9. "i-s", = immersion stabilization means a calibrated device immersed in the effluent stream until the reading is stabilized.

10. The "monthly average" temperature means the arithmetic mean of temperature measurements made on an hourly basis, or the mean value plot of the record of a continuous automated temperature recording instrument, either during any calendar month, or during the operating month if flows are of shorter duration.

11. The "daily maximum" temperature means the highest temperature observed during a 24-hour period or during the operating day if flows are of shorter duration.

12. The "minimum" value means the lowest value measured for at least a 24-hour period.

13. "Bypass" means the intentional diversion of wastes from any portion of a treatment facility.

14. "Upset" means an exceptional incident in which there is unintentional and temporary noncompliance with technology-based permit effluent limitations because of factors beyond the reasonable control of the permittee.

15. "Estimated" flow means a calculated volume or discharge rate which is based on a technical evaluation of the sources contributing to the discharge including, but not limited to pump capabilities, water meters and batch discharge volumes.

16. "Measured" flow means any method of liquid volume measurement the accuracy of which has been previously demonstrated in engineering practice, or for which a relationship to absolute volume has been obtained.

J. TOXIC POLLUTANT REPORTING

The permittee shall notify the Department as soon as it is known or suspected that any toxic pollutants which are not specifically limited by this permit have been discharged at levels which will exceed the notification levels specified in 40 CFR Part 122.42(a).

I. Special Conditions

K. ORGANIC TESTING OF COLD ROLLING WASTEWATER

Effluent limitations have been established for naphthalene and tetrachloroethylene to limit the discharge of toxic organic compounds present in wastewaters from cold rolling operations. These two organic compounds are commonly found in cold rolling wastewaters. However, cold rolling wastewaters are known to contain diverse levels and species of toxic organic compounds, depending on the composition of the rolling and cleaning solutions used at a plant site. Thus, at a particular site, naphthalene and tetrachloroethylene may not adequately represent the discharge, and other specific compounds may more appropriately indicate the presence and removal of toxic organic pollutants.

The permittee will undertake a monitoring program to characterize its cold rolling discharges in terms of toxic organic pollutants. The intent of this monitoring program is to determine whether naphthalene and tetrachloroethylene are appropriate pollutants for controlling the discharge at this plant; or whether limitations for other toxic organic pollutants should be established at this plant, in lieu of either or both naphthalene and tetrachloroethylene.

a. Within ninety (90) days after the installation of cold rolling wastewater treatment facility, the permittee shall monitor the influent to and effluent from such treatment facility.

b. Samples acquired in accordance with paragraph (a) shall be collected over a minimum of a three (3) consecutive day period using 24-hour composites for organic compound analyses, except volatiles, and three (3) grabs per 24 hours for oil and grease and volatile organic compounds. This period shall include a time when rolling solutions are being changed and cleaning solutions being discharged.

c. The samples shall be analyzed for total suspended solids, oil and grease, and organic compounds.* The organic compounds shall be identified and quantified using accepted GC/MS methods.

d. Within thirty days of the end of the time period specified in paragraph (a) above, the permittee shall submit the data and any explanatory information to the Environmental Protection Agency and the Maryland Office of Environmental Programs (OEP).

After review of the monitoring data, OEP may: (1) leave the permit unchanged, or (2) reopen the permit to include effluent limitations and monitoring requirements for other toxic organic compounds, or to reduce the monitoring requirements for naphthalene and tetrachloroethylene, if they are not found in the discharges.

I. Special Conditions

K. ORGANIC TESTING OF COLD ROLLING WASTEWATER (continue)

*The group of organic compounds tested shall include as a minimum, those organics listed in Table VI-2 (page 64) of Volume VI of the Development Document for Effluent Limitations Guidelines and Standards for the Iron and Steel Manufacturing Point Source Category, (EPA 440/1-82/024). In addition to the quantitative analysis for the specified pollutants, a reasonable attempt shall be made to identify and quantify any additional compounds which are present at or above the detection level which was used for analyzing the specified pollutants.

L. THERMAL DISCHARGES

The permittee has completed studies to assess the effects of thermal discharges on aquatic life. The only major thermal discharge occurs at outfall 001 and this discharge is able to meet State water quality standards for temperature - COMAR 10.50.01.02 D(2)(c). Therefore a 316(a) waiver is not necessary and the use of once-through cooling may be continued.

M. INTAKE STRUCTURE

The permittee has completed studies to assess the effect of impingement on aquatic life at and near outfall 001 as required by 316(b) and COMAR 10.50.01.13. A review of these studies indicates that improvements to the intake structure are warranted. The only cost effective improvement is the installation of a barrier net across the intake canal.

Within 3 months of the effective date of this permit, the permittee shall submit plans for design and installation of a barrier net. Within one year of the effective date of this permit the permittee shall complete installation of the barrier net.

N. BIOASSAY TESTING

Permittee shall conduct a toxicity bioassay on the effluent from outfalls 001, 014, and 021 within 6 months after final improvements have been made at each location. The results of the bioassay tests shall be submitted to the Department within 1 year after the final improvements have been made.

The studies shall follow the Maryland Aquatic Toxicity Bioassay Guidance Document. A study plan shall be submitted to the Department for approval within 6 months of the effective date of the permit.

I. Special Conditions

O. STORMWATER MANAGEMENT PLAN

The permittee shall conduct a detailed study of stormwater runoff at the Sparrows Point facility. This study will result in a stormwater management plan which shall be submitted to the Department within 18 months of the effective date of the permit. The plan shall include an evaluation of the volume and pollutant content of the stormwater discharged through each outfall and shall propose modifications as appropriate.

P. WASTEWATER SUPERINTENDENT CERTIFICATION

Within six months from the date of issuance of this permit, the permittee's facility shall be operated by an industrial wastewater superintendent duly certified by the Maryland Board of Certification. At no time during the effect of this permit shall the treatment facilities be operated for more than six months without a certified operating superintendent.

II. General Conditions

A. MONITORING AND REPORTING

1. Representative Sampling

Samples and measurements taken as required herein shall be taken at such times as to be representative of the quantity and quality of the discharges during the specified monitoring periods.

2. Reporting-Monitoring Results Submitted Quarterly

Monitoring results obtained during the previous quarter shall be summarized on a Discharge Monitoring Report Form (EPA No. 3320-1 or T-40). For each constituent monitored at a frequency of once per month or less, the results obtained during the reporting quarter shall be summarized on a single report form for each quarter. More frequently monitored constituents shall be reported on a separate form for each calendar month of the reporting quarter. Results shall be submitted to the DHMH postmarked no later than the 28th day of the month following the end of the reporting period. Reporting periods shall end on the last day of the following months: March, June, September and December. The first reporting period ends December 31, 1985.

The reports shall be submitted to:

DEPARTMENT OF HEALTH AND MENTAL HYGIENE
OFFICE OF ENVIRONMENTAL PROGRAM
WASTE MANAGEMENT ADMINISTRATION
ENFORCEMENT PROGRAM
201 WEST PRESTON STREET
BALTIMORE, MARYLAND 21201

3. Sampling and Analysis Methods

The analytical and sampling methods used shall conform to procedures for the analysis of pollutants as identified in Title 40 CFR Part 136 - "Guidelines Establishing Test Procedures for the Analysis of Pollutants."

4. Data Recording Requirements

For each measurement or sample taken pursuant to the requirements of this permit, the permittee shall record the following information:

II. General Conditions

a. The exact place, date, and time of sampling or measurement;

b. The person(s) who performed the sampling or measurement;

c. The dates the analyses were performed;

d. The person(s) who performed the analyses;

e. The analytical techniques or methods used; and

f. The results of all required analyses.

5. Monitoring Equipment Maintenance

The permittee shall periodically calibrate and perform maintenance procedures on all monitoring and analytical instrumentation to insure accuracy of measurements.

6. Additional Monitoring by Permittee

If the permittee monitors any pollutant at the locations designated herein more frequently than required by this permit, using approved analytical methods as specified above, the results of such monitoring, including the increased frequency shall be included in the calculation and reporting of the values required in the Discharge Monitoring Report Form (EPA No. 3320-1 or T-40).

7. Records Retention

All records and information resulting from the monitoring activities required by this permit, including all records of analyses performed, calibration and maintenance of instrumentation, and original recordings from continuous monitoring instrumentation shall be retained for a minimum of three (3) years. This period shall be automatically extended during the course of litigation, or when requested by DHMH.

B. MANAGEMENT REQUIREMENTS

1. Change in Discharge

All discharges authorized herein shall be consistent with the terms and conditions of this permit. The discharge of any pollutant identified in this permit at a level in excess of that authorized shall constitute a violation of the terms and

II. General Conditions

conditions of this permit. Anticipated facility expansions, production increases, or process modifications which will result in new, different, or an increased discharge of pollutants shall be reported by the permittee by submission of a new application or, if such changes will not violate the effluent limitations specified in this permit, by notice to DHMH. Following such notice, the permit may be modified by DHMH to specify and limit any pollutants not previously limited.

2. Noncompliance with Effluent Limitations

If for any reason the permittee does not comply with or will be unable to comply with any daily maximum effluent limitation specified in this permit, the permittee shall notify within 24 hours Enforcement Program by telephone at 301-225-5700 and within five days shall provide DHMH with the following information in writing:

a. A description of the noncomplying discharge including its impact upon the receiving waters;

b. Cause of noncompliance;

c. Anticipated time the condition of noncompliance is expected to continue or if such condition has been corrected, the duration of the period of noncompliance;

d. Steps taken by the permittee to reduce and eliminate the noncomplying discharge;

e. Steps to be taken by the permittee to prevent recurrence of the condition of noncompliance;

f. A description of the accelerated or additional monitoring by the permittee to determine the nature and impact of the noncomplying discharge.

3. Facilities Operation

All treatment, control and monitoring facilities or systems installed or used by the permittee are to be maintained in good working order and operated efficiently.

II. General Conditions

4. Adverse Impact

The permittee shall take all reasonable steps to minimize or prevent any adverse impact to waters of the State or to human health resulting from noncompliance with any effluent limitations specified in this permit, including such accelerated or additional monitoring as necessary to determine the nature and impact of the noncomplying discharge.

5. Bypassing

Any bypass of treatment facilities necessary to maintain compliance with the terms and conditions of this permit is prohibited unless:

a. The bypass is unavoidable to prevent a loss of life, personal injury or substantial physical damage to property, damage to the treatment facilities which would cause them to become inoperable, or substantial and permanent loss of natural resources;

b. There are no feasible alternatives;

c. Notification is received by DHMH within 24 hours (if orally notified, then followed by a written submission within five (5) days) of the permittee's becoming aware of the bypass. Where the need for a bypass is known (or should have been known) in advance, this notification shall be submitted to DHMH for approval at least ten (10) days before the date of bypass;

d. The bypass is allowed under conditions determined by the DHMH to be necessary to minimize adverse effects.

II. General Conditions

6. Conditions Necessary for Demonstration of an Upset

An upset shall constitute an affirmative defense to an action brought for noncompliance with technology-based effluent limitations only if the permittee demonstrates, through properly signed, contemporaneous operating logs, or other relevant evidence, that:

a. An upset occurred and that the permittee can identify the specific cause(s) of the upset; and

b. The permitted facility was at the time being operated in a prudent and workman-like manner and in compliance with proper operation and maintenance procedures; and

c. The permittee submitted a notification of noncompliance as required by paragraph 2 above; and

d. The permittee complied with any remedial measures required to minimize adverse impact.

7. Removed Substances

Wastes such as solids, sludges, or other pollutants removed from or resulting from treatment or control of wastewaters, or facility operations shall be disposed of in a manner to prevent any removed substances or runoff from such substances from entering or from being placed in a location where they may enter the waters of the State.

8. Power Failures

In order to maintain compliance with the effluent limitations and prohibitions of this permit, the permittee shall either:

a. In accordance with the Schedule of Compliance contained in Part I, provide an alternative power source sufficient to operate the wastewater collection and treatment facilities;

or, if such alternative power source is not in existence, and no date for its implementation appears in Part I,

b. Halt, reduce or otherwise control production and all discharges upon the reduction, loss, or failure of the primary source of power to the wastewater collection and treatment facilities.

II. General Conditions

C. RESPONSIBILITIES

1. Right of Entry

The permittee shall permit the Secretary, DHMH, the Regional Administrator for the Environmental Protection Agency, or their authorized representatives, upon the presentation of credentials:

a. To enter upon the permittee's premises where an effluent source is located or where any records are required to be kept under the terms and conditions of this permit;

b. To access and copy, at reasonable times, any records required to be kept under the terms and conditions of this permit;

c. To inspect, at reasonable times, any monitoring equipment or monitoring method required in this permit;

d. To inspect, at reasonable times, any collection, treatment, pollution management, or discharge facilities required under this permit; and

e. To sample, at reasonable times, any discharge of pollutants.

2. Transfer of Ownership or Control of Facilities

In the event of any change in ownership or control of facilities from which the authorized discharge emanates, the permit may be transferred to another person if:

II. General Conditions

C. RESPONSIBILITIES

a. The permittee notifies DHMH in writing, of the proposed transfer;

b. A written agreement, indicating the specific date of proposed transfer of permit coverage and acknowledging responsibilities of current and new permittees for compliance with the liability for the terms and conditions of this permit, is submitted to DHMH; and

c. Neither the current permittee nor the new permittee receive notification from DHMH, within thrity (30) days, of intent to modify, revoke, reissue or terminate the existing permit.

3. Reapplication for a Permit

At least 180 days before the expiration date of this permit, unless permission for a later date has been granted by DHMH the permittee shall submit a new application for a permit or notify DHMH of the intent to cease discharging by the expiration date. In the event that a timely and sufficient reapplication has been submitted and DHMH is unable, through no fault of the permittee, to issue a new permit before the expiration date of this permit, the terms and conditions of this permit are automatically continued and remain fully effective and enforceable.

4. Availability of Reports

Except for data determined to be confidential under Section 308 of the Clean Water Act, 33 U.S.C. §1318, all submitted data shall be available for public inspection at the offices of DHMH and the Regional Administrator of the Environmental Protection Agency.

5. Permit Modification

A permit may be modified by DHMH upon written request of the permittee and after notice and opportunity for a public hearing in accordance with and for the reasons set forth in 40 CFR §122.14 and 122.17.

II. General Conditions

6. Permit Modification, Suspension Revocation

After notice and opportunity for a hearing this permit may be modified, suspended, or revoked and reissued in whole or in part during its term for causes including, but not limited to, the following:

a. Violation any terms or conditions of this permit;

b. Obtaining this permit by misrepresentation or failure to disclose fully all relevant facts; or

c. A change in any condition that requires either a temporary or permanent reduction or elimination of the authorized discharge; or

d. Information that the permittee discharge poses a threat to human health or welfare.

7. Toxic Pollutants

Not withstanding II-C-D and above, if a Toxic Effluent Standard or Prohibition (including any schedule of compliance specified in such Toxic Effluent Standard or Prohibition) is established by the U.S. Environmental Protection Agency or pursuant to Section 9-314 of the Health-Environmental Article, Annotated Code of Maryland for a toxic pollutant which is present in the discharges authorized herein and such standard is more stringent than any limitations upon such pollutant in this permit, this permit shall be revoked and reissued or modified in accordance with the Toxic Effluent Standard or Prohibition and the permittee so notified. Any effluent standard established in this case for a pollutant which is injurious to human health is effective and enforceable by the time set forth in the promulgated standard, even absent permit modification.

8. Oil & Hazardous Substances Prohibited

Nothing in this permit shall be construed to preclude the institution of any legal action or relieve the permittee from any responsibility, liability, or penalties to which the permittee may be subject under Section 311 of the Clean Water Act (33 U.S.C. §1321), or under the Maryland Code.

II. General Conditions

9. Civil and Criminal Liability

Except as provided in permit conditions on "bypassing", "upset" and "power failure", nothing in this permit shall be construed to preclude the institution of any legal action nor relieve the permittee from civil or criminal responsibilities and/or penalties for non-compliance with Title 9 of the Health-Environmental Article, Annotated Code of Maryland or any Federal, Local, or other State law or regulation.

10. Property Rights/Compliance with other Requirements

The issuance of this permit does not convey any property rights in either real or personal property, or any exclusive privileges nor does it authorize any injury to private property or any invasion of personal rights, nor any infringement of Federal, State or local laws or regulations

11. Severability

The provisions of this permit are severable. If any provisions of this permit shall be held invalid for any reason, the remaining provisions shall remain in full force and effect. If the application of any provision of this permit to any circumstance is held invalid, its application to other circumstances shall not be affected.

12. Waterway Construction and Obstruction

This permit does not authorize the construction or placing of physical structures, facilities or debris, or the undertaking of related activities in any waters of the State.

13. Compliance with Water Pollution Abatement Statutes

The permittee shall comply at all times with the provisions of Health-Environmental Article, Title 7, Subtitle 2 and Title 9, Subtitle 3 of the Annotated Code of Maryland and the Clean Water Act, 33 U.S.C. §1251 et seq.

Bethlehem Steel

Permit No. 79-DP-0064
Page No. 31

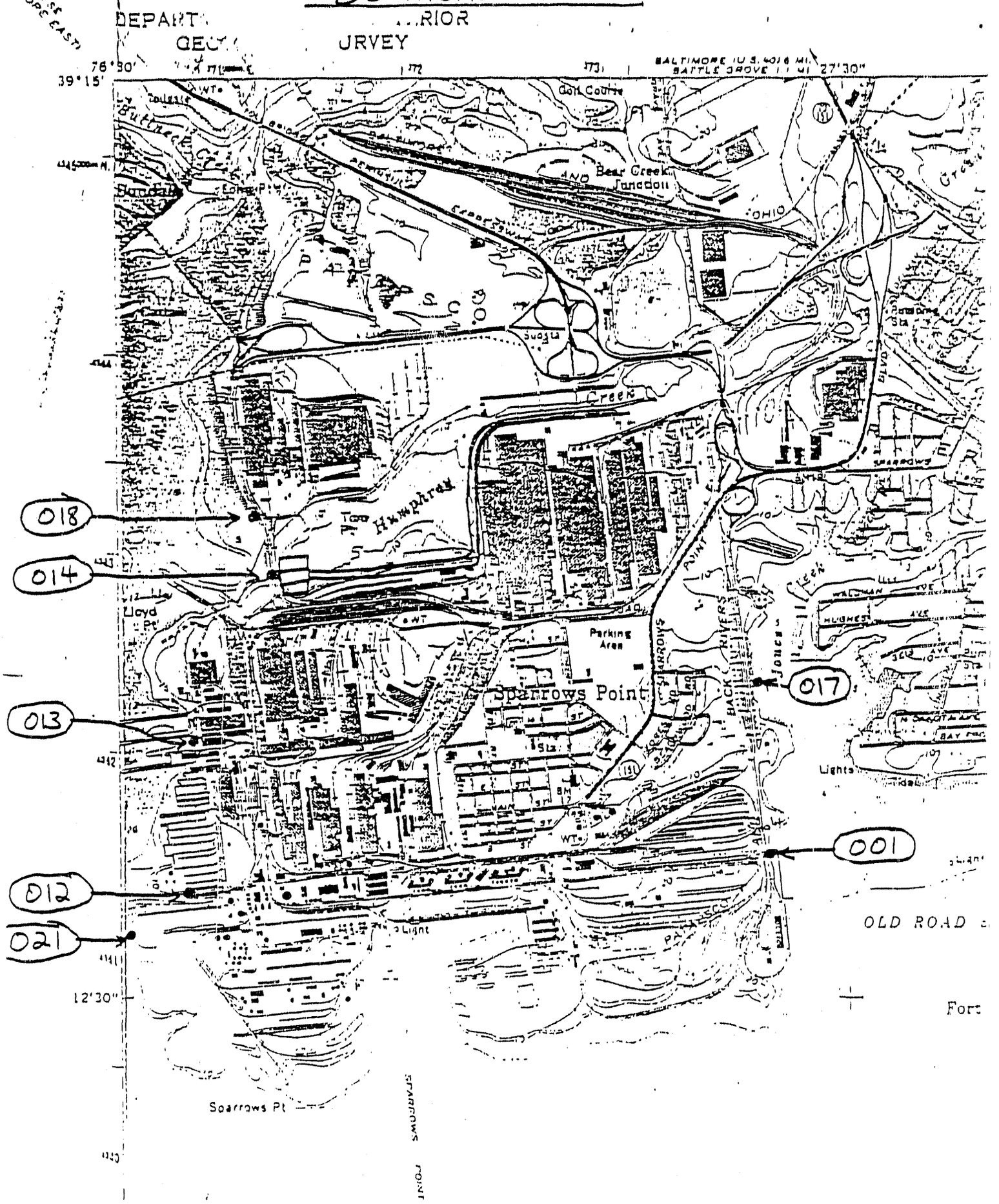

II. NPDES PERMIT

On September 5, 1974 the Administrator of the U.S. Environmental Protection Agency approved the proposal submitted by the State of Maryland for the operation of a permit program for discharges into navigable waters pursuant to Section 402 of the Clean Water Act, 33 U.S.C. Section 1342.

Pursuant to the aforementioned approval, this Discharge Permit is both a State of Maryland Discharge Permit and a NPDES Permit.

This permit and the authorization to discharge shall expire at midnight on the expiration date of the permit. Permittee shall not discharge after the expiration date of this permit. In order to receive authorization to discharge after the expiration date, the permittee shall submit such information, forms, fees as are required by DHMH no later than 180 days prior to the expiration date.

Ronald Nelson, Director
Waste Management Administration

POST IN CONSPICUOUS PLACE

MC

State of Maryland

DEPARTMENT OF THE ENVIRONMENT
2500 BROENING HIGHWAY
BALTIMORE, MARYLAND 212 24

Martin W. Walsh, Jr.
Secretary

[ ] Construction Permit [X] Operating Permit

AIR MANAGEMENT ADMINISTRATION

PERMIT NO. 03-0147-6-0897 Date Issued November 1, 1988

PERMIT FEE NONE Expiration Date October 31, 1989

LEGAL OWNER & ADDRESS	SITE
Bethlehem Steel Corporation Sparrows Point, MD 21219 ATTN: Environmental Control Dept.	Sparrows Point Plant Baltimore County

INSTALLATION DESCRIPTION

"A" Coke Oven Battery

This permit to operate is subject to the conditions contained in the Administrative Consent Order of October 30, 1987

Sixty (60) days prior to expiration date of this permit an application for a permit to operate shall be resubmitted.

Ronald E. Tyminski
Administrator, ~~Engineering and~~ Enforcement Program

George P. Ferreri
Director, Air Management Administration

(NOT TRANSFERABLE)

AMA-1 (Rev. 1-22-88)
MDE 130

RECEIVED
JAN 11 1989
AIR POLLUTION CONTROL

STATE OF MARYLAND · DEPARTMENT OF HEALTH AND MENTAL HYGIENE
Office of Environmental Programs
Air Management Administration
P.O. Box 13387
Baltimore, Maryland 21203

RENEWAL

APPLICATION FOR PERMIT TO OPERATE PROCESS EQUIPMENT

I. PREMISE IDENTIFICATION:

Bethlehem Steel Corporation — PREMISE NAME OR IDENTIFICATION

147 — PREMISE NUMBER

Sparrows Point Plant, Sparrows Point, Maryland 21219 — PREMISE ADDRESS

Baltimore — COUNTY

II. EQUIPMENT IDENTIFICATION: Registration No. 6-0897

[X] SINGLE INSTALLATION [ ] PROCESS LINE [ ] IDENTICAL UNITS AND NO. _____

III. DESCRIBE EQUIPMENT AND ITS MAJOR FUNCTION. STATE TYPE AND SIZE EQUIPMENT AND TYPE CONTROL DEVICE ASSOCIATED WITH THIS EQUIPMENT ONLY.

"A" Coke Oven Battery is a refractory structure consisting of 80 slot type ovens, each 6 meters high and 16" wide. Heat is transferred by conduction and radiation from common oven and flue walls to the coal charge in the ovens. Volatile matter is distilled from the coal in the form of gases and vapor, leaving a product called coke. At the end of the coking cycle, the hot coke is pushed from the oven into a hooded quench car and taken to a quench station for cooling with water. The coke is then conveyed to the blast furnace for consumptio

IV. STATUS OF CONTROL EQUIPMENT:

(a) [ ] NO CONTROL EQUIPMENT NECESSARY. EMISSIONS _____.

(b) [X] EXISTING CONTROL EQUIPMENT SATISFACTORY. EMISSIONS _____.

[ ] YES [ ] NO EQUIPMENT STACK TESTED ON SITE. DATE _____.

[ ] YES [ ] NO EQUIPMENT TO BE TESTED, DATE _____.

(c) [ ] CONTROL EQUIPMENT PRESENTLY BEING CONSTRUCTED OR SCHEDULED FOR CONSTRUCTION.

STARTING DATE _____ ESTIMATED COMPLETION DATE _____.

[ ] YES [ ] NO EQUIPMENT TO BE STACK TESTED, DATE _____.

(d) [ ] NON-COMPLIANCE.

Scott B. Hay
E. B. Hay, Superintendent — SIGNATURE AND TITLE

9/20/88
DATE

POST IN CONSPICUOUS PLACE

State of Maryland

DEPARTMENT OF THE ENVIRONMENT

201 W. PRESTON STREET
BALTIMORE, MARYLAND 21201

Martin W. Walsh, Jr.
Secretary

[ ] Construction Permit

[X] CONDITIONAL Operating Permit

AIR MANAGEMENT ADMINISTRATION

PERMIT NO. 03-0147-6-0936

Date Issued April 1, 1988

PERMIT FEE NONE

Expiration Date March 31, 1989

LEGAL OWNER & ADDRESS

Bethlehem Steel Corporation
Sparrows Point, MD 21219
ATTN: Environmental Control Dept.

SITE

Baltimore County

INSTALLATION DESCRIPTION

Coke Oven Batteries, Nos. 11 & 12.

This permit to operate is subject to the conditions contained in the Administrative Consent Order of October 30, 1987.

Sixty (60) days prior to expiration date of this permit an application for a permit to operate shall be resubmitted.

Donald P. Andrews
Administrator, Engineering and Enforcement Program

George P. Ferreri
Director, Air Management Administration

(NOT TRANSFERABLE)

AMA-1 (Rev. 1-22-88)
MDE 130

STATE OF MARYLAND · DEPARTMENT OF HEALTH AND MENTAL HYGIENE
Office of Environmental Programs
Air Management Administration
P.O. Box 13387
Baltimore, Maryland 21203

COKE OVEN BATTERIES
NOS. 11 & 12

APPLICATION FOR PERMIT TO OPERATE PROCESS EQUIPMENT

I. PREMISE IDENTIFICATION:

Bethlehem Steel Corporation — PREMISE NAME OR IDENTIFICATION
147 — PREMISE NUMBER

Sparrows Point Plant - Sparrows Point, Maryland 21219 — PREMISE ADDRESS
Baltimore — COUNTY

II. EQUIPMENT IDENTIFICATION: Coke Oven Batteries 11 & 12
Registration No. 6-0936

☐ SINGLE INSTALLATION ☐ PROCESS LINE ☒ IDENTICAL UNITS AND NO. 2

III. DESCRIBE EQUIPMENT AND ITS MAJOR FUNCTION. STATE TYPE AND SIZE EQUIPMENT AND TYPE CONTROL DEVICE ASSOCIATED WITH THIS EQUIPMENT ONLY. A coke oven battery is a refractory structure operating at temperatures in the range of 2400°F. Heat is transferred by conduction and radiation from common oven and flue walls to the coal charge. The volatile matter is distilled from the coal in the form of gases and vapor, leaving coke. The hot coke is pushed from the oven into a quench car and taken to a quenching station for cooling. The coke is then conveyed to the blast furnaces for consumption. See attached Supplemental Data Sheet.

IV. STATUS OF CONTROL EQUIPMENT:

(a) ☐ NO CONTROL EQUIPMENT NECESSARY. EMISSIONS _____.

(b) ☒ EXISTING CONTROL EQUIPMENT SATISFACTORY. EMISSIONS _____.

☐ YES ☐ NO EQUIPMENT STACK TESTED ON SITE. DATE _____.

☐ YES ☐ NO EQUIPMENT TO BE TESTED, DATE _____.

(c) ☐ CONTROL EQUIPMENT PRESENTLY BEING CONSTRUCTED OR SCHEDULED FOR CONSTRUCTION.

STARTING DATE _____ ESTIMATED COMPLETION DATE _____.

☐ YES ☐ NO EQUIPMENT TO BE STACK TESTED, DATE _____.

(d) ☐ NON-COMPLIANCE.

Evan B. Hay
SIGNATURE AND TITLE
E. B. Hay, Superintendent

3/1/88
DATE

To Schroeder 12/28/87

POST IN CONSPICUOUS PLACE

RECEIVED
DEC 11 1987
BUREAU OF INDUSTRIAL HYGIENE
BALTIMORE CITY HEALTH DEPT.

State of Maryland

DEPARTMENT OF THE ENVIRONMENT

201 W. PRESTON STREET
BALTIMORE, MARYLAND 21201

Martin W. Walsh, Jr.
Secretary

[ ] Construction Permit [X] Operating Permit [ ] DHS Facility Permit

AIR MANAGEMENT ADMINISTRATION

PERMIT NO. 03-0147-6-0937 Date Issued October 30, 1987

PERMIT FEE NONE Expiration Date May 31, 1988

LEGAL OWNER & ADDRESS	SITE
Bethlehem Steel Corporation Sparrows Point, MD 21219 ATTN: Environmental Control Dept.	Baltimore County

INSTALLATION DESCRIPTION

Claus Type Sulfur Recovery Plant

This permit to operate is issued with the following conditions:

The Company will keep detailed operating records and calculate on a monthly basis the sulfur removal efficiency and down time of the sulfur recovery plant. The records and calculations shall be kept for a minimum of two years and be made available to the Department upon request.

Sixty (60) days prior to expiration date of this permit an application for a permit to operate shall be resubmitted.

Donald P. Andrews
Administrator, Engineering and Enforcement Program

George P. Hemmer
Director, Air Management Administration

(NOT TRANSFERABLE)

Renewal Application has been Filed with MDE and is under review

AMA-1 (Rev 2-1-79) DHMH 1589

STATE OF MARYLAND · DEPARTMENT OF HEALTH AND MENTAL HYGIENE
Office of Environmental Programs
Air Management Administration
P.O. Box 13387
Baltimore, Maryland 21203

SULFUR PLANT

APPLICATION FOR PERMIT TO OPERATE PROCESS EQUIPMENT

I. PREMISE IDENTIFICATION:

Bethlehem Steel Corporation — 147
PREMISE NAME OR IDENTIFICATION — PREMISE NUMBER

Sparrows Point Plant - Sparrows Point, Maryland 21219 — Baltimore
PREMISE ADDRESS — COUNTY

II. EQUIPMENT IDENTIFICATION: Claus Type Sulfur Recovery Plant, Reg. No. 6-0937

[X] SINGLE INSTALLATION [ ] PROCESS LINE [ ] IDENTICAL UNITS AND NO. _____

III. DESCRIBE EQUIPMENT AND ITS MAJOR FUNCTION. STATE TYPE AND SIZE EQUIPMENT AND TYPE CONTROL DEVICE ASSOCIATED WITH THIS EQUIPMENT ONLY.

The installation is designed to remove sulfur from the H_2S gas that is recovered at the desulfurizer for coke oven gas. The major facilities of the Sulfur Recovery Plant consist of an H_2S burner, waste heat boiler, sulfur condenser, catalytic reactor, and a tail gas incinerator with stack.

IV. STATUS OF CONTROL EQUIPMENT:

(a) [ ] NO CONTROL EQUIPMENT NECESSARY. EMISSIONS _____

(b) [X] EXISTING CONTROL EQUIPMENT SATISFACTORY. Average EMISSIONS 68.5#/Hr. Sulfur

[X] YES [ ] NO EQUIPMENT STACK TESTED ON SITE. DATE Feb. & Mar. 1974

[ ] YES [ ] NO EQUIPMENT TO BE TESTED, DATE _____

(c) [ ] CONTROL EQUIPMENT PRESENTLY BEING CONSTRUCTED OR SCHEDULED FOR CONSTRUCTION.

STARTING DATE _____ ESTIMATED COMPLETION DATE _____

[ ] YES [ ] NO EQUIPMENT TO BE STACK TESTED, DATE _____

(d) [ ] NON-COMPLIANCE.

C. W. Ishmael
SIGNATURE AND TITLE
C. W. Ishmael, Manager

3/27/87
DATE

DO NOT WRITE BELOW THIS LINE

FIELD REPORT

INSPECTOR:	DATE OF INSPECTION:	PERSON CONTACTED:
R. Hall	10-30-87	Joe Dolan

DISCUSSION, CONDITIONS AND RECOMMENDATION:

The Claus Suflur Plant recovers sulfur from the H_2S gas by means of the Claus Process. This is accomplished by burning the H_2S gas with a controlled amount of air to convert part of the hydrogen sulfide to sulfur dioxide and subsequently reacting the sulfur dioxide in the presence of a catalyst with the unburned hydrogen sulfide to form sulfur and water vapor.

Elemental sulfur formed in the process is condensed and recovered as molten liquid. Tail gas from the plant is fed to a natural gas fired incinerator where all remaining sulfur compounds are converted to sulfur dioxide and discharged to the atmosphere.

Regulation 10.18.06.05D requires this installation have at least 95% efficiency in removing sulfur.

The Department will continue the reporting requirement as a permit condition - recommend approval of annual permit to operate.

RECEIVED
DEC 21 1987
AIR POLLUTION CONTROL

STATE OF MARYLAND · DEPARTMENT OF HEALTH AND MENTAL HYGIENE
Environmental Health Administration
Air Quality Programs
P.O. Box 13387
Baltimore, Maryland 21203

COKE OVENS
COAL CHEMICAL RECOVERY PLANT

RECEIVED
JAN 25 1989
ERM, INC.

APPLICATION FOR PERMIT TO OPERATE PROCESS EQUIPMENT

I. PREMISE IDENTIFICATION:

Bethlehem Steel Corporation — 147
PREMISE NAME OR IDENTIFICATION — PREMISE NUMBER

Sparrows Point Plant - Sparrows Point, Maryland 21219 — Baltimore
PREMISE ADDRESS — COUNTY

II. EQUIPMENT IDENTIFICATION: "A" and "B" Coal Chemical Recovery Plants, Benzene/Litol Plant (Registration No. 6-0937)

☐ SINGLE INSTALLATION ☐ PROCESS LINE ☐ IDENTICAL UNITS AND NO. _____

III. DESCRIBE EQUIPMENT AND ITS MAJOR FUNCTION. STATE TYPE AND SIZE EQUIPMENT AND TYPE CONTROL DEVICE ASSOCIATED WITH THIS EQUIPMENT ONLY.

During the coking of coal, a mixture of gases and vapors, called raw coke oven gas, is evolved from the individual ovens and passes into a collecting main. The raw coke oven gas is processed in a coal chemical recovery system to separate the raw gas into the following basic materials: coke oven gas, tar, ammonia liquor and light oil. The refining of these by-product materials is described in detail in the registration application of the Coal Chemical Recovery Plant (Registration No. 6-9037).

IV. STATUS OF CONTROL EQUIPMENT:

(a) ☐ NO CONTROL EQUIPMENT NECESSARY. EMISSIONS _____.

(b) * ☒ EXISTING CONTROL EQUIPMENT SATISFACTORY. EMISSIONS No visible emissions.

☐ YES ☒ NO EQUIPMENT STACK TESTED ON SITE. DATE _____.

☐ YES ☒ NO EQUIPMENT TO BE TESTED, DATE _____.

(c) ☐ CONTROL EQUIPMENT PRESENTLY BEING CONSTRUCTED OR SCHEDULED FOR CONSTRUCTION.

STARTING DATE _____ ESTIMATED COMPLETION DATE _____.

☐ YES ☐ NO EQUIPMENT TO BE STACK TESTED, DATE _____.

(d) ☐ NON-COMPLIANCE.

*Ammonium sulfate scrubbers.

J. G. Roberts
SIGNATURE AND TITLE

J. G. Roberts, General Manager

AUG 8 1983
DATE

APPENDIX C

Administrative Consent Order

ADMINISTRATIVE CONSENT ORDER

FOR THE

BETHLEHEM STEEL CORPORATION

SPARROWS POINT PLANT

I. A. Bethlehem Steel Corporation, Sparrows Point Plant, Maryland (the "Company") hereby consents to this Administrative Consent Order (Order) dealing with the operations covered herein to achieve compliance with the air pollution requirements of COMAR 10.18.10, and other air pollution requirements.

B. Solely for the purpose and terms of this Order, the Company, upon approval of this Order by the Secretary of the Department of the Environment (the "Secretary"), waives any obligations which the Maryland Department of the Environment (the "Department") may have to serve a corrective order under Environment Article, Section 2-604 of the Annotated Code of Maryland as it pertains to any violation of the regulations or requirements referred to in this Order above, and hold a hearing thereon under the provisions of Section 2-604. This Order, when approved by the Secretary, may be enforced by the Department to the same extent as if the acts to be performed were ordered by the Secretary after a hearing, subject to Paragraph IX below.

II. The Company agrees to do the following:

A. <u>Basic Oxygen Furnace (BOF) Shop</u>

1. Since 1981, the Company has implemented improved scrubber operating practices and operating practices/regular maintenance of system components and duct work in an effort to comply with COMAR 10.18.10.04B(2)(e)(iii) to insure good capture by the primary hood on each vessel. The Department believes additional improvements can be made which will further reduce fugitive emissions from the shop

building during charging and tapping. The Company agrees to further reduce fugitive emissions by implementing these additional operating practices and measures.

2. By November 1, 1987, the Company shall complete debugging of and commence using the modifications (fan ramping controls) to the scrubber control system so that capture efficiency of fugitive emissions can be increased during charging of hot metal into the vessels.

3. The Company shall properly operate and maintain all control system components including the scrubbers, fans, dampers, ductwork, hoods, and oxygen lance-hole covers so as to minimize the discharge of emissions into the atmosphere.

4. The Company shall adhere to the emission control procedures in the Standard Operating Procedures (SOP) presently used and to be used by the Shop workers to minimize the discharge of fugitive emissions into the atmosphere during charging and tapping. The Company shall submit the SOP to the Department, for approval, by December 1, 1987. The new operating procedures shall include, at a minimum, the following:

   a. The pouring of hot metal with the vessel in the 60 degree position (from the horizontal axis) until the lip of the ladle comes within one foot of the vessel. Hot metal shall be charged into the vessel with a slow and continuous volumetric flow rate. The minimum hot metal pour time with the vessel in the 60 degree position shall be 60 seconds.

   b. Rotating the vessel and then pouring the remainder of the metal as quickly as possible.

c. Routinely inspecting and correcting the vessel positions every two weeks to insure maintenance of correct vessel alignment.

d. Minimizing the charging of oily scrap into the vessel.

5. After December 31, 1988, the Company shall comply with the following fugitive visible emission standard: Visible emissions from the Basic Oxygen Furnace Shop Building, other than water in an uncombined form, shall not exceed 20% opacity except for an aggregate of 3 minutes in any 60-minute period. Compliance with this regulation shall be determined in accordance with the procedures in Attachment 1.

6. The Company shall conduct fugitive visible emission observations of the BOF Shop Building in accordance with Attachment 1 and visible emission observations of the BOF scrubber stacks in accordance with AMA-TM 81-04 (dated May, 1981) during the particulate emissions test required by Paragraph 7 below.

7. The Company shall conduct particulate emission tests on the scrubber stacks to determine compliance with COMAR 10.18.10.04A(1), in accordance with the following schedule:

a. By November 15, 1987 - Submit test protocol.

b. By February 29, 1988 - Complete emission tests.

c. By April 1, 1988 - Submit test report and visible emission observation data to the Department.

The test shall be performed simultaneously on all four scrubber stacks with the results averaged (volume-weighted average) over the four stacks. Method 1005 shall be used to conduct the test. The testing period shall be limited to the time initiating with the start of oxygen blowing and ending with the start of tapping.

8. If the report due April 1, 1988 required by Paragraphs II.A.7. indicates non-compliance with COMAR 10.18.10.04A(1), the Company, or a qualified consultant, shall evaluate the operation of the BOF Shop and the control system and recommend specific remedial measures to bring the BOF Shop into compliance, according to the following schedule:

   a. By May 1, 1988, submit a written description of the scope of work of the evaluation to the Department for review and approval.

   b. Complete the evaluation within thirty (30) days or a longer period of time approved by the Department after the Department has approved the scope of work of the evaluation.

   c. Submit a written report of the evaluation to the Department within 30 days after the completion of the evaluation. The report shall contain a detailed description of the evaluation conducted and shall set forth a plan and an expeditious schedule, including milestones, for implementing any recommended specific remedial measures to bring the BOF Shop emissions into compliance, and shall identify any interim measures that can be taken to reduce emissions until such time as the remedial measures have been implemented.

   d. Implement the recommended remedial and interim actions in accordance with the schedule set forth in the report required by Paragraph II.A.8.c., above.

   e. Within 30 days after the Company implements all recommended remedial actions, but in any event not later than December 31, 1989, it shall achieve, demonstrate, and thereafter maintain compliance with COMAR 10.18.10.04A(1) and COMAR 10.18.10.03A(1). Compliance shall be demonstrated according to the requirements of Paragraphs II.A.7. and IV.B.

9. If the particulate emissions test report required by Paragraph II.A.7, above, indicates non-compliance with COMAR 10.18.10.04A(1), the Company upon written demand by the Department, shall pay a stipulated penalty to the Department of $25,000.00 payable 30 days from the date of the demand. The Company, upon written demand by the Department, shall also pay a separate stipulated penalty of $10,000.00 per month (not to exceed $300,000.00) if the Company has not demonstrated compliance with COMAR 10.18.10.04A(1) by the first day of each month, starting June 1, 1988; provided that this penalty is not due for any month unless the Department notifies the Company in writing that it is not meeting the milestones established under Paragraph II.A.8.

10. Nothing in this Order shall prevent the Company from submitting an application for an alternative visible emission standard for fugitive emissions from the BOF Shop Building provided that the Company has first complied with the requirement of Paragraphs II.A.2, 3, 4, 6, and 7, above. Submission of such an application shall not affect the Company's obligation under Paragraph II.A.8, above, unless agreed to in writing by the Department.

B. <u>Coke Oven Batteries - Combustion Stacks and Gas Desulfurization</u>

1. In order to meet the requirements of COMAR 10.18.10.04A(1) and COMAR 10.18.10.03A(1) for Batteries 11 & 12 and the requirements of Permit-to-Construct (#03-79-6-00897) for Battery A, the Company shall install all necessary piping and renovate the desulfurization equipment so that all underfiring gas to coke oven batteries A, 11, & 12 is desulfurized , according to the following schedule:

   a. By March 15, 1988 - Complete preliminary engineering.

b. By May 15, 1988 - Start final design and engineering of system.

c. By September 1, 1988 - Submit status report on the proposed construction and renovation.

d. By December 1, 1988 - Place purchase orders for major components of system.

e. By July 1, 1989 - Start construction.

f. By June 30, 1990 - Complete construction. System operational.

g. By August 30, 1990 - Complete de-bugging.

h. By October 31, 1990 - Achieve, demonstrate, and maintain compliance with the requirements of COMAR 10.18.10.04A(1) and COMAR 10.18.10.03A(1) for Batteries 11 & 12 and the Permit (#03-79-6-00897) Requirements for Battery "A" (conditions #3F and 4).

2. After completion of the desulfurization equipment and piping, the Company shall conduct particulate emissions tests on the combustion stacks of Batteries A, 11, & 12, according to the following schedule:

a. By April 1, 1990 - Submit test protocol.

b. By September 30, 1990 - Complete emission tests.

c. By October 31, 1990 - Submit final test reports to the Department.

The particulate emissions test shall be conducted in accordance with Method 1005 in AMA TM 83-05, "Stack Test Methods for Stationary Sources".

3. If the particulate emissions test report indicates non-compliance with the particulate permit requirements for Battery "A" or COMAR 10.18.10.04A(1) for Batteries 11 & 12, the Company shall submit to the Department by January 1, 1991, a schedule to bring the facility into

compliance as expeditiously as practicable, but not later than January 1, 1992. The Company, upon written demand by the Department, shall also pay a stipulated penalty of $10,000.00 for each battery combustion stack payable within 30 days of receipt of such demand and, thereafter, a penalty of $5,000.00 per month for each battery combustion stack in non-compliance with the requirements of COMAR 10.18.10.04A(1) beginning November 30, 1990, and continuing until compliance is achieved and demonstrated by subsequent tests.

4. The Company, upon written demand by the Department, shall pay, within 30 days of receipt of such demand, a stipulated penalty of $10,000 for each month or a portion of a month in which the Company is late in meeting either the December 1, 1988 or the July 1, 1989 milestones in Paragraph II.B.1., above, provided that the Department will rebate 75% of any such penalty paid to the Department if the Company achieves and demonstrates compliance as required by the October 31, 1990 milestone in Paragraph II.B.1.

5. The Company shall properly maintain and operate all desulfurization equipment and the Claus Sulfur Plant and shall achieve, demonstrate, and maintain compliance with COMAR 10.18.10.05 and COMAR 10.18.06.05.

6. The Company shall continue the oven wall and end flue repair program to reduce emissions due to leakage.

7. The Company shall operate the opacity transmissometer on the combustion stack of Battery A in accordance with the requirements of Permit-to-Construct #03-79-6-00897, Condition F.2. The Performance Specification Test shall be completed by February 1, 1988. The Company shall submit the first required quarterly Excess Emission Report to the Department by April 20, 1988.

C. By-Product Slot Type Coke Oven Batteries

1. Pushing

a. "A" Battery

i. The Permit-to-Construct (#03-79-6-00897) issued by the Department on June 19, 1979, requires pushing emissions to be captured by an enclosed pushing emission control system and exhausted through a control device. Emission standards in the permit are 0.03 pounds of particulate/ton of coke and 0.03 grains/dscf for the control device stack, 20% opacity (never-to-be-exceeded) for visible emissions which escape from the capture system and 10% opacity (never-to-be-exceeded) during quench car travel.

The Company has initiated a program to rehabilitate the pushing emissions capture hood and the gas cleaning system. The Company shall send a report to the Department by November 1, 1987 that provides a detailed description of this program. At a minimum, this program must include the repair of instrumentation, and the substantial reduction of the opening size of the interface between the capture hood and the coke guide. The Company shall complete these repairs by December 31, 1987.

ii. By January 1, 1988, the Company shall hire a knowledgeable consultant to evaluate the operation of the entire capture and gas cleaning system and recommend specific remedial measures to improve the

emission capture and cleaning efficiency. This evaluation shall include, at a minimum, study of the following:

(1) Modifying the baghouse.

(2) Improving the capture efficiency.

(3) Coke mass temperature and coking practice.

(4) Installation of auxiliary hood or control system to capture fugitive emissions from around the coke guide area.

The evaluation shall be made according to the following schedule:

(1) By March 1, 1988, submit a written description of the scope of work of the evaluation to the Department for review and approval.

(2) Complete the evaluation within thirty (30) days or a longer period of time approved by the Department after the Department has approved the scope of work of the evaluation.

(3) Submit a written report of the evaluation to the Department within 30 days after the completion of the evaluation. The report shall contain a detailed description of the evaluation conducted and shall set forth a plan and an expeditious schedule for implementing any recommended specific remedial measures that the Department requires to be implemented in order to achieve and demonstrate compliance, and shall identify any interim

measures that can be taken to reduce emissions until such time as the remedial measures have been implemented.

(4) Implement the recommended interim and remedial measures in accordance with the schedule set forth in the report required above.

(5) Within 30 days after the Company implements all recommended remedial actions, it shall achieve, demonstrate, and thereafter maintain compliance with the requirements of permit-to-construct #03-79-6-00897, (Condition #3E and 4). Final compliance shall be achieved as expeditiously as practicable, but in any event not later than October 31, 1990.

iii. The Company shall keep the capture and control system, including all instrumentation, properly maintained and operating.

b. #11 & #12 Batteries

i. (1) It is the Company's present intention to continue to operate batteries #11 and #12 until 1995. The Company shall maintain and operate the Chemico One-Spot Pushing Emission Control Car while continuing development and construction of the experimental One-Spot Modified Water Wagon (MWW). The MWW consists conceptually of a system of water spray piping and nozzles mounted on a single spot quench car, associated water

holding and delivery assemblies. This system shall be described at length in the Permit-to-Construct application which the Company shall submit to the Department. The Department considers the MWW to not constitute Reasonably Available Control Technology (RACT), not to be capable of achieving compliance with the standards set forth in COMAR 10.18.10.04B(2)(h)(v) and (5), and to be acceptable only as an interim measure and only for the time periods specifically allowed in this Order.

(2) After obtaining a Permit-to-Construct from the Department for the MWW with the most efficient emission control system, the Company may operate the MWW to control pushing emissions for Batteries 11 & 12. The Company shall assure that all pushes are controlled by using the existing Chemico Car or building a second MWW as a spare.

ii. In lieu of the continued operation of the Chemico unit, the Department will allow the use of the MWW as an interim control measure until a new pushing control system (mobile-hood or shed capture system) with a land-based emission control system is installed. The schedule for the new system is as follows:

(1) By December 1, 1987 - Initiate preliminary engineering study.

(2) By June 1, 1988 - Complete preliminary and start final engineering.

(3) By October 1, 1988 - Submit Permit-to-Construct application for new land-based pushing control system.

(4) By February 1, 1989 - Place purchase orders for major components of system.

(5) By August 1, 1989 - Start construction.

(6) By July 1, 1990 - Submit status report.

(7) By December 31, 1990 - Complete installation of the new pushing control system and achieve, demonstrate, and maintain compliance with COMAR 10.18.10.04B(2)(h)(v) and the Permit-to-Construct for the system.

iii. After completion of the new pushing control system, the Company shall conduct particulate emissions tests on the control equipment to demonstrate compliance with the requirements of COMAR 10.18.10.04A(1), according to the following schedule:

(1) By December 1, 1990 - Submit test protocol.

(2) By March 1, 1991 - Complete emissions test.

(3) By April 15, 1991 - Submit final test report to the Department.

The particulate emissions test shall be conducted in accordance with Method 1005 in AMA TM 83-05 (dated June 1983).

iv. Until the new pushing control system is installed and operating, the Company shall employ the following interim operating practices on Batteries 11 & 12:

(1) Maintain the batteries at a minimum gross coking time (push-to-push) of 20 hours.

(2) Coke from each coke oven operating unit shall be sampled during every turn of operation and analyzed as a daily composite for percent volatile matter by weight. Operators shall record the sample identification number, the operating unit, and the date of the collection of any sample for which the analysis indicates that the sample contains greater than 1.10 percent volatile matter. The Company shall submit in the quarterly environmental report, for each battery , the dates on which the volatile matter of the coke exceeded 1.10 percent and the percent volatile matter.

2. Charging, Offtakes, Doors, Lids - Batteries A, 11, & 12

a. By December 1, 1987, the Company shall complete all necessary repairs and modifications to the offtakes, doors, lids and charging systems on Batteries A and 11/12 and achieve, demonstrate, and maintain compliance with the requirements of COMAR 10.18.10.03C for Batteries 11 & 12 and Permit-to-Construct (#03-79-6-00897) for Battery A.

The Company shall inspect and clean all doors and jambs, particularly the full perimeter of the gas channel, knife edge, and jamb before or after each push. The hearth plate shall be cleaned as required.

b. After February 1, 1988, the Company shall adhere to the Standard Operating Procedures (SOP) presently used or to be used by the coke oven workers to minimize the discharge of emissions into the atmosphere from charging, doors, lids, and offtakes so as to comply with the requirements of COMAR 10.18.10.03C. The Company shall submit the SOP to the Department, for approval, by January 15, 1988. All coke oven workers are to be trained annually and instructed to comply with the SOP. All new coke oven workers are to be trained before starting work on the batteries. Also, by February 1, 1988, the Company shall designate auditors to monitor the coke oven battery crews at least once per week to assure adherence to the SOP. The Company's Environmental Department shall keep a file record of each audit which shall be made available to the Department upon request. The Company shall also send a summary of each audit performed to the Department in the environmental quarterly report.

c. Whenever 2 or more larry cars are used concurrently on Batteries #11 and #12, each Battery shall be considered to be separate coke oven operating units under the definition of COMAR 10.18.10.01.B(1) for purposes of determining compliance with the requirements of COMAR 10.18.10.03C.

D. <u>Number 4 Open Hearth Shop</u>

1. By December 1, 1987, the Company shall complete all necessary repairs to the electrostatic precipitators and achieve, demonstrate and maintain compliance with the requirements of COMAR 10.18.10.03A.

2. Effective January 15, 1988, upon demand by the Department, the Company shall pay a stipulated penalty of $100.00 for each day of violation of COMAR 10.18.10.03A, for each stack observed to be in violation.

E. "L" Blast Furnace Baghouse

By December 1, 1987, the Company shall complete all necessary repairs and bag replacements at the "L" Blast Furnace Baghouse and achieve, demonstrate, and maintain compliance with the requirements of COMAR 10.18.10.03A. An adequate supply of replacement bags (minimum of 2,000 bags) shall be kept on hand for rapid replacement so as to assure full and continuous compliance.

F. Basic Oxygen Furnace Shop Reladling Baghouse

By December 1, 1987, the Company shall complete all necessary repairs and bag replacements at the BOF Shop Reladling Baghouse and achieve, demonstrate, and maintain compliance with the requirements of COMAR 10.18.10.03A and COMAR 10.18.10.04B(2)(e)(i). An adequate supply of replacement bags (minimum of 720 bags) shall be kept on hand for rapid replacement so as to assure full and continuous compliance.

G. Basic Oxygen Furnace Shop Reladling Operations

By February 1, 1988, the Company shall complete all necessary actions, which shall include modifications to the hot metal cars and/or to the BOF reladling pit, and achieve, demonstrate, and maintain compliance with the requirements of COMAR 10.18.10.04B(2)(e)(i).

H. Miscellaneous Installations

By January 1, 1988, the Company shall complete all necessary repairs to the Sinter plant cooler and discharge end, all the Penwood boilers (including Numbers 1 & 3), the Blooming mill scarfer, and the Blooming mill soaking pit

(reheat) furnaces numbers 9 and 20 (as listed in the Notice of Violation issued by the U.S. EPA, dated January 28, 1987), and achieve, demonstrate, and maintain compliance with the requirements of COMAR 10.18.10.03A(1), COMAR 10.18.09.05A(2), and COMAR 10.18.06.02C(2).

III. A. Civil Penalty: The Company shall pay a $750,000.00 penalty according to the following schedule:

1. Five hundred thousand dollars ($500,000.00) Compromise Civil Penalty - due by August 1, 1988.
2. Two hundred fifty thousand dollars ($250,000.00) Compromise Civil Penalty - due by August 1, 1989.

These penalties shall be paid by certified check made payable to the Department.

B. Stipulated Penalty Payments:

If the Company fails to comply with the milestone date specified for such compliance, the Company shall pay, no later than thirty (30) calendar days after it receives notice of non-compliance from the Department, the amounts set forth below for failure to comply with the milestone dates set forth below. Such payments shall be paid by certified check made payable to the Department.

Schedule of Stipulated Penalty Payments

1. Milestone Date

Completion of desulfurization equipment repair and new pipeline by June 30, 1990.

Penalty Amount

$50,000.00 each month for failure to complete this requirement by the first day of the following month.

2. Milestone Date

Completion of new pushing control system on Batteries #11 & #12 by December 31, 1990.

Penalty Amount

a. If at any time prior to December 31, 1990, the Company decides to shut down either battery, or both batteries, without first meeting this milestone date, a one time penalty of $250,000.00 and $50,000.00 for each battery for each month or portion thereof, starting January 1, 1988, that the Company has operated or operates the battery using a Modified Water Wagon as a pushing control device. In this event, actual shut down of the battery shall occur as expeditiously as practicable, but not later than December 31, 1990; and

b. $25,000.00 for each battery that operates at any time after December 31, 1990, for each month or portion thereof that the Company has not completed this requirement, until December 31, 1991, after which the penalty is $50,000.00 for each battery for each month or portion thereof that the Company has not completed this requirement.

The Company reserves the right to contest whether or not any particular failure to comply with the foregoing milestone dates actually occurred or should be extended pursuant to Paragraph VI.

IV. Inspections and Observations

A. Any authorized representative of the Department, upon presentation of credentials, may enter upon the premises of the Company for the purpose of monitoring and determining compliance with the provisions of this Order Such persons shall comply with all reasonable security and safety procedures applicable to such facility.

B. 1. The Company shall demonstrate compliance with applicable visible emission standards by conducting observations of the Number 4 Open Hearth Shop electrostatic precipitator stacks, the "L" Blast Furnace Baghouse, and BOF Shop Reladling Baghouse, the Sinter plant cooler and discharge end, the Penwood boilers (including Numbers 1 & 3, the Blooming mill scarfer, and the Blooming mill soaking pit (re-heat) furnaces numbers 9 and 20 (as listed in the Notice of Violation issued by the U.S. EPA, dated January 28, 1987) at a frequency of 1 observation per day, five days per week, for 4 weeks (within a 6-consecutive week period) to be completed by February 29, 1988. A summary report of these observation shall be sent to the Department by April 1, 1988. After March 1, 1988, the Company shall conduct a minimum of 3 visible emission observations per week and include the results in the quarterly environmental report to the Department. After March 1, 1989, the frequency of these visible emission observations may be modified upon written approval by the Department.

All observations shall be a minimum of 1 hour in length, and performed in accordance with AMA-TM 81-04 (dated May, 1981). The observation data shall be made available to the Department upon request. Observations of the "L" Blast Furnace Baghouse shall be made during the slagging operation of the furnace. Observations of the BOF Shop Reladling Baghouse shall include at least one reladling operation per observation.

2. The Company shall demonstrate compliance with the applicable visible emission standard in Paragraph II.A.5. by conducting observations of the BOF Shop Building at a frequency of 1 observation per day, five

days per week, for 4 weeks (within a 6 consecutive week period) to be initiated after December 31, 1988 and to be completed by February 28, 1989. A summary report of these observations shall be sent to the Department by April 1, 1989. After March 1, 1989, the Company shall conduct a minimum of 3 visible emission observations per week and include the results in the quarterly environmental report to the Department. After March 1, 1990, the frequency of these visible emission observations may be modified upon written approval by the Department.

All observations shall be a minimum of 1 hour in length, and performed in accordance with AMA-TM 81-04 (dated May 1981) and Attachment 1. The observation data shall be made available to the Department upon request.

V. Reporting

A. The failure to make timely and complete reports or to retain self-monitoring records in accordance with the provisions of this Order creates a presumption (rebuttable by the Company) that the Company is in violation of the requirement for which the reports or records are made or retained.

B. The Company shall direct its stack testing consultants to submit all stack testing reports, required by this Order directly to the Department concurrently with submittal to the Company.

VI. For the purpose of this Order, the Department considers the provisions of Environment Article, Section 2-613 of the Annotated Code of Maryland to be applicable. Accordingly, as provided in Environment Article, Section 2-613 of the Annotated Code of Maryland, violations of this Order shall not be construed to include any violation which was caused by an act of God, strike, riot, catastrophe, or any other causes beyond the control of the Company. The

Company will report in writing to the Department any such cause or causes for delay within 20 days after the delay is known by the Company to have occurred. If the Company shows that it has been delayed in the implementation of any obligation under this Order by any such condition, then the Department shall extend the date or dates specified in this Order for such a period of time as allows compliance to be achieved as expeditiously as practicable after the delay excused pursuant to this paragraph. The extension granted under the preceding sentence shall in no event exceed the time actually caused by the condition. The Department's action shall constitute a decision of the Secretary issued pursuant to Section 2-602 of Environment Article of the Annotated Code of Maryland with rights of appeal as provided in Section 2-605.

VII. The Company shall continue to send detailed quarterly progress reports to the Department on the twentieth of the month following each calendar quarter.

VIII. The provisions of this Order are severable. Should the Company fail to comply with the provisions herein as to any operation, such failure to comply shall not affect the applicability of this Order to any other operation covered herein.

IX. In any proceeding brought to enforce a provision of this Order or a specific regulation of the Department, the Company shall have preserved to it, its right to assert as a defense in such action any defense that would be available to it in a hearing by the Secretary held pursuant to Section 2-605 of Environment Article of the Annotated Code of Maryland. Execution of this Order by the Company shall not be considered or construed as a waiver of such rights, including any rights the Company may otherwise have under Federal or State law to contest any determination by the Department that this Order has been violated or to contest any other decision that the Department is required to make under the Order, provided that any such contest does not alter any milestone in the Order.

X. Except for those standards and testing methods and procedures established under this Order which shall remain in effect until superseded by Department regulations, this Order shall remain in effect as to each operation referred to above until the Department notifies the Company in writing that the actions to be taken hereunder by the Company with respect to that operation shall have been fully completed whereupon this Order shall be terminated as to each such operation.

XI. Unless otherwise specified in this Order, the procedures for determining visible and/or mass emissions shall be those procedures set forth in AMA-TM 81-04 (dated May, 1981) and 83-05 (dated June, 1983) respectively to the extent practicable.

XII. Execution of this Order by the Company or the Department after the time for accomplishment of any event specified in the Order does not relieve the Company of fully complying with the Order.

XIII. The Department reserves the right to bring any action authorized by law to enforce this Order. If the Company has violated or is violating the Order, the Department also may bring an action to enforce any statutory, regulatory, permitting or other requirement on which the Order is based. Payment by the Company of any stipulated penalty for a violation of any provision of this Order does not relieve the Company of its obligation to comply with the provision, and the Department may bring any action authorized by law to enforce the violation.

XIV. Nothing in the Order shall be construed as an admission by the Company of any fact or assertion contained herein, and this Order may not be used by any other party for the purpose of proving any fact stated herein.

FOR BETHLEHEM STEEL CORPORATION:

BY: David M. Anderson DATED: 10/29/87
David M. Anderson
~~Director~~ General Manager
Environmental ~~& Governmental Programs~~ Affairs

BY: R W Raybuck DATED: 10-30-87
Robert W. Raybuck
General Manager
Sparrows Point Plant

FOR THE STATE OF MARYLAND:

SO ORDERED, this 30th day of OCTOBER, 1987

Martin W. Walsh, Jr.
Martin W. Walsh, Jr.
Secretary
Department of the Environment

APPENDIX D

Records of Agency Contacts

The ERM Group

List of Agency Contacts

Agency	Subject
• Maryland Historical Trust	Location of Archaeological Sites
• Maryland Historical Trust	Historical Sites
• Baltimore County Department of Environmental Protection and Resource Management	Chesapeake Bay Critical Area
• Maryland Air Management Administration	Noise Regulations
• Maryland Air Management Administration	Air Issues
• Maryland Air Management Administration	Attainment/Nonattainment Status
• Maryland Historical Trust	Historical Site Review Process
• Baltimore County Planning Department	Fort Carroll
• Regional Planning Council	Socioeconomic Data
• Baltimore County Economic Development Commission	Zoning
• Baltimore County Department of Environmental Protection and Resource Management	Chesapeake Bay Critical Areas
• Maryland Forest, Park and Wildlife Service	Threatened and Endangered Species
• Maryland Department of Natural Resources	Coastal Management Program Consistency
• National Marine Fisheries Service	Threatened and Endangered Species
• U.S. Fish and Wildlife Service	Threatened and Endangered Species

END

DATE FILMED

11 / 1 / 90