ornl

OAK RIDGE NATIONAL LABORATORY

LOCKHEED MARTIN

ORNL/TM-13367

Tank Waste Consolidation Analysis for Transfer of ORNL RH-TRU Tank Sludges to the Melton Valley Storage Tanks

T. E. Kent
S. M. DePaoli

RECEIVED
FEB 20 1997
OSTI

MASTER

DISTRIBUTION OF THIS DOCUMENT IS UNLIMITED

MANAGED AND OPERATED BY
LOCKHEED MARTIN ENERGY RESEARCH CORPORATION
FOR THE UNITED STATES
DEPARTMENT OF ENERGY

ORNL-27 (3-96)

This report has been reproduced directly from the best available copy.

Available to DOE and DOE contractors from the Office of Scientific and Technical Information, P. O. Box 62, Oak Ridge, TN 37831; prices available from (423) 576-8401, FTS 626-8401.

Available to the public from the National Technical Information Service, U.S. Department of Commerce, 5285 Port Royal Road, Springfield, VA 22161.

This report was prepared as an account of work sponsored by an agency of the United States Government. Neither the United States Government nor any agency thereof, nor any of their employees, makes any warranty, express or implied, or assumes any legal liability or responsibility for the accuracy, completeness, or usefulness of any information, apparatus, product, or process disclosed, or represents that its use would not infringe privately owned rights. Reference herein to any specific commercial product, process, or service by trade name, trademark, manufacturer, or otherwise, does not necessarily constitute or imply its endorsement, recommendation, or favoring by the United States Government or any agency thereof. The views and opinions of authors expressed herein do not necessarily state or reflect those of the United States Government of any agency thereof.

DISCLAIMER

Portions of this document may be illegible electronic image products. Images are produced from the best available original document.

ORNL/TM-13367

Chemical Technology Division

Tank Waste Consolidation Analysis for Transfer of ORNL RH-TRU Tank Sludges to the Melton Valley Storage Tanks

T. E. Kent
S. M. DePaoli

Date Published: January 1997

Prepared by
OAK RIDGE NATIONAL LABORATORY
Oak Ridge, Tennessee 37831-6285
managed by
LOCKHEED MARTIN ENERGY RESEARCH CORP.
for the
U.S. DEPARTMENT OF ENERGY
under contract DE-AC05-96OR22464

CONTENTS

ABSTRACT 1

1. OBJECTIVE 2

2. OVERVIEW 2

3. FINDINGS FROM INITIAL SCENARIOS 4

4. TECHNICAL BASIS 5
   4.1 Tank Farm Sludge Mobilization and Transfer Methods 6
   4.2 MVST Solid/Liquid Separation Methods 7
      4.2.1 Single-Stage Gravity Settling 7
      4.2.2 Two-Stage Gravity Settling 9
      4.2.3 Cross-Flow Filtration 9
      4.2.4 Discussion of SLS Methods 10
   4.3 Evaporation of Sluice Waters and Supernate 11
   4.4 On-Line Solids Monitoring 11
   4.5 Solids Content of Transported Sludges 11
   4.6 Carryover of Suspended Solids to the MVST Capacity Increase Tanks 12

5. SCHEDULE ASSUMPTIONS 13
   5.1 Tank Farm Transfer Schedule 13
   5.2 Schedule for MVST CIT Completion 14

6. EQUIPMENT/PIPELINE COSTS 14
   6.1 Pipeline Modifications 14
   6.2 Solids Monitoring Costs 14
   6.3 Cross-Flow Filter System Costs 15
   6.4 Cost of Fitting CITs for Sludge Mixing and Retrieval 16

7. SUMMARY OF BASELINE WATER BALANCE ANALYSIS 16

8. REFERENCES 18

APPENDIX A: WATER BALANCE SPREAD SHEET FOR
BASELINE SCENARIO 21

TANK WASTE CONSOLIDATION ANALYSIS FOR TRANSFER OF ORNL RH-TRU TANK SLUDGES TO THE MELTON VALLEY STORAGE TANKS

T. E. Kent and S. M. DePaoli

ABSTRACT

An evaluation of technical issues and the schedule associated with consolidation of all Oak Ridge National Laboratory (ORNL) Remote Handled Transuranic (RH-TRU) sludges in the Melton Valley Storage Tanks (MVSTs) was performed. The transfer of these sludges must be completed in FY 2000 to meet the TRU Program milestone for beginning shipment of treated sludges to the Waste Isolation Pilot Plant (WIPP) by 2002. The specific issues addressed in this study included (1) the overall schedule for transferring all RH-TRU sludges to the MVSTs, (2) the ability of the MVST tank system to contain and manage the sludges and liquids generated during the transfers, and (3) the cost and schedule impacts of different solid/liquid separation and solids monitoring methods used during sludge transfer for management of sluice waters. The tank waste consolidation calculations (water balance analyses) involve the use of a simple mathematical model of the tank system in the form of a spread sheet with accurate data on sludge volume, liquid volume, and sludge and liquid compositions. The analyses are performed by first choosing a technical basis for the analysis and then performing spread sheet calculations simulating the transfer of the sludges and liquids from the various tank farms to the MVSTs. Engineering judgement is used to choose the appropriate tank to receive the transfer and the manner in which the transfer sluice water is managed after the transfer. The time required to consolidate all sludges from the three principal ORNL tank farms is driven by the program schedules of the individual tank farms, the amount of additional liquids used to mobilize and transfer the sludges, the availability of additional tank capacity, and the methods used for managing the sludges and sluice waters as they enter the MVSTs. Various sludge consolidation scenarios were developed and evaluated to determine the overall schedule impact and to produce a baseline scenario that results in consolidation of all sludges in FY 2000. It was found that the schedule for transfer of sludges from the ORNL Gunite tanks was the most important driver for the overall sludge consolidation schedule. The use of solids-monitoring devices to allow for greater control of sluice water quantities and the use of a cross-flow filtration system to separate sluice water can reduce schedule requirements, though the impact of these systems on the schedule depends on the ability to accelerate the Gunite tank transfers. A baseline schedule was developed using the latest updated tank farm schedules, solids-monitoring capability, and two-stage gravity settling for managing sluice waters. The results of this analysis indicate that the consolidation of TRU sludges in the MVSTs can be completed by September 2000. There are many key assumptions that significantly influence the baseline plan. Changes in these assumptions must be noted and the water balance calculations rerun as appropriate to evaluate the effect on the schedule.

1. OBJECTIVE

The objective of this work is to evaluate the schedule and technical issues associated with consolidation of Remote Handled Transuranic (RH-TRU) sludges in the Melton Valley Storage Tanks (MVSTs). This work supports the DOE Transuranic Waste (TRU) Program plans for private sector treatment of all ORNL TRU sludges for disposal at the Waste Isolation Pilot Plant (WIPP). Transfer of these sludges must be completed in FY 2000 to meet the required schedule for beginning shipment of treated sludges to the WIPP by 2002. This study was performed to (1) evaluate the sludge transfer schedule, (2) evaluate the ability of existing tank systems to contain and manage the sludges and liquids generated during the transfers, and (3) evaluate the costs and schedules of different solid/liquid separation and solids-monitoring methods used during sludge transfer for management of sluice waters.

2. OVERVIEW

There are three ORNL tank farms containing RH-TRU sludges that require consolidation at the MVSTs: the Gunite and Associated Tanks (GAAT), the Old Hydrofracture Facility tanks (OHF), and the Bethel Valley Evaporator Service Tanks (BVESTs). Figure 1 illustrates the tank farm transfers that will take place. The GAAT consists of eight vertical, cylindrical Gunite tanks containing a total sludge volume of about 44,200 gal and a supernate volume of about 340,000 gal. Two of these tanks have holding capacities of 40,000 gal, and six have capacities of 170,000 gal. The OHF tanks consist of five smaller (13,000- to 25,000-gal capacities), horizontal tanks containing a total of 6,100 gal of sludge and about 37,000 gal of liquid. The BVESTs consist of five horizontal 50,000-gal tanks containing about 38,800 gal of sludge and about 48,300 gal of liquid. The sludges in these three tank farms will be transferred to the MVSTs (eight 50,000-gal horizontal tanks), which currently contain about 101,600 gal of sludge and 196,400 gal of liquid. The sludges from the three tank farms are to be mobilized, retrieved from the tanks, and sluiced with water to the MVSTs by way of an existing double-contained pipeline. Table 1 summarizes estimates for the total volume of sludge and liquids to be transferred to the MVSTs.

Since the MVSTs are already partially filled with sludge and liquid and have a finite volume capacity, the transfer of additional quantities of sludge and liquid must be performed with careful consideration of volume and selection of tank to receive the transfer. Though the physical size of the MVSTs suggests a 400,000-gal capacity, other factors limit the volume of the transfers that can be made to the system. The Operational Safety Requirements (OSR) for the facility limits the total storage volume to 95% of the capacity, or 380,000 gal. Also, the sludges must be evenly distributed to the tanks. Filling an individual tank completely with sludge would make it very difficult or impossible to mix and mobilize the sludge for later retrieval and treatment activities. Two of the tanks have been designated as decant tanks to be used as a second stage for separating the sludges from the liquids by gravity settling. The amount of sludge transferred to these two tanks must be minimized.

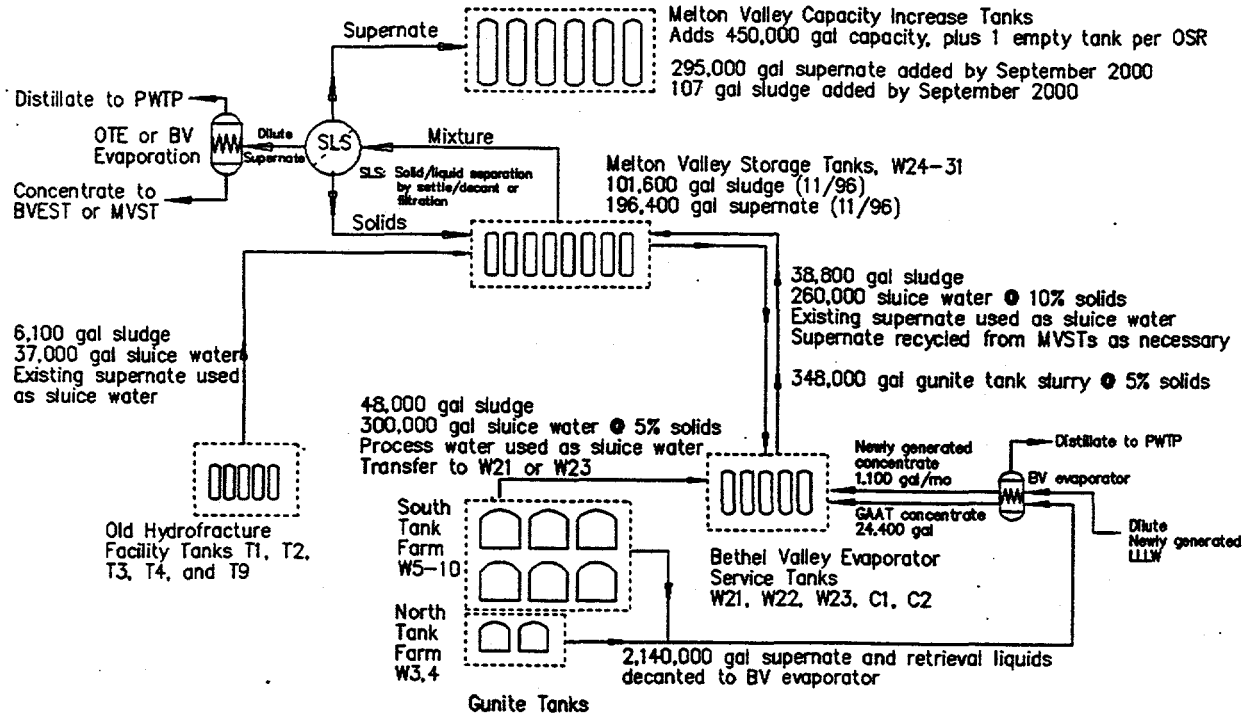

Fig. 1. Flowsheet for consolidation of ORNL RH-TRU sludge in the Melton Valley Storage Tanks.

Table 1. Summary of tank farm sludge and sluice water volumes

Tank farm	Sludge volume (gal)	Retrieval and sluice water volume (gal)	Total liquid and sludge volume to be managed at the MVSTs (gal)
OHF	6,100	37,000[a]	43,100
BVEST	38,800	260,000[a] including recycled supernate	298,800
GAAT	44,200	1,800,000 for retrieval[b] 300,000 for transport[c]	344,200
Total	89,100	2,397,000	686,100

[a]Existing supernate used.
[b]Estimated max. volume of process water required for retrieving GAAT sludges and scabbling tank walls.
[c]Estimated volume of process water used to transport GAAT sludges to the MVSTs.

The tank waste consolidation calculations (water balance analyses) involve the use of a simple mathematical model of the tank system in the form of a spread sheet with accurate records of sludge volume, liquid volume, and sludge and liquid compositions, as shown in Appendix A. The analyses are performed by first choosing a technical basis for the analysis and then performing spread sheet calculations simulating the transfer of the sludges and liquids from the various tank farms to the MVSTs. Tank volumes, supernate compositions, and schedules are updated automatically for each transfer activity. Engineering judgement is used to select the appropriate tank to receive the transfer and the manner in which the transfer sluice water is managed after the transfer. The schedule is determined by the number and order of the tank transfers, the solid/liquid separation (SLS) method and time required, the amount of sluice water used in the transfer, the evaporator system used to remove excess water, and other factors. The schedule impact for SLS was determined by running several analyses or "scenarios" in which the SLS method was changed while holding all other factors constant. Similar scenarios were performed to evaluate the schedule impact of solids content for transported slurries and the order of tank farm transfers.

3. FINDINGS FROM INITIAL SCENARIOS

The following are the initial findings for the water balance analyses performed during June and July:[1,2]

1. The May 1996 baseline schedules for tank transfers would have delayed the completion of the sludge consolidation until as late as February 2002. The transfer schedules for several tank farms required accelerating. A significant improvement to the schedule was realized by transferring BVEST tanks during slack time between GAAT and OHF transfers.

2. Moving the Capacity Increase Tank (CIT) system in-service date from January 1999 to July 1998 results in a nearly corresponding decrease in the time required to consolidate the sludges.

3. Sludge consolidation with two-stage gravity settling took seven months longer than when single-stage settling was used.

4. Cross-flow filtration and solids monitoring systems add significant transfer flexibility, can reduce the consolidation schedule up to 12 months, and reduce or eliminate sludge carryover to the new MVST CIT system.

5. The greatest amount of sludge carryover to the CITs was estimated to be over 5000 gal using single-stage settling for SLS. It was estimated that the use of two-stage settling would reduce carryover to the CITs to less than 1000 gal of sludge.

6. The cost of mixing and retrieving TRU sludges from the CITs was estimated to be $3.5M to $4.5M based on recent cost estimates for mixing sludges in the MVSTs and BVESTs.

7. Using solids-monitoring devices and increasing the solids content of the transferred sludges from 5 to 10 wt% reduced the time required for consolidation by ten months.

8. When the MVSTs are transferred to the private sector, the volume of the CIT system will be 60 to 80% of the OSR limit. This assumes that the BVESTs are not considered part of the storage tank system once they have been cleaned out and returned to service tank status. This also assumes that most of the supernate liquids are transferred from the MVSTs to the CITs.

These initial results prompted several questions regarding scheduling and the technical basis for the study. The technical issues were addressed. To satisfy schedule concerns, meetings were held among the local environmental management program managers to agree on a new integrated schedule for consolidating the sludges. A new technical and schedule basis for the study was prepared and used for an updated water balance analysis.

4. TECHNICAL BASIS

The following describes the technical basis and assumptions used in analyzing the tank sludge consolidation scenarios.

4.1 TANK FARM SLUDGE MOBILIZATION AND TRANSFER METHODS

The methods used to mobilize and transfer sludges from the tank farms to the MVSTs govern the composition and subsequent treatment of the liquids after the transfers. Dilute liquids, such as those from OHF and GAAT transfers, are sent to the BVEST evaporator system for evaporation and disposal of the liquid condensate by way of the Process Waste Treatment Plant (PWTP). BVEST transfers are made using existing high-salt, concentrated supernate liquids. These liquids must be managed by SLS, followed by either recycle to the BVESTs or transfer to the CIT system.

The OHF tanks will use a combination of single-point sluicing and in-tank mechanical mixing to accomplish the mobilization and transfer of sludges. Single-point sluicing involves the use of a single sluice jet mounted near the top of the tank. The sluice jet uses a moderate-pressure (100-psi) spray directed at the settled sludge to mobilize the sludge. Once mixed, the sludge slurry is pumped from the tank using progressive-cavity (Moyno) pumps. The slurry is transferred to a smaller consolidation tank equipped with mechanical (FLYGT) mixers designed to keep the sludge suspended in the liquid. Transfer pumps at the consolidation tank are used to move the sludge to the MVSTs. Since the OHF supernates are fairly dilute, the liquids will be transferred to the BVEST evaporator for processing after separating from the sludges at the MVSTs.

The GAAT system will use the Modified Light Duty Utility Arm (MLDUA) with a high-pressure confined sluicing end-effector (CSEE) and jet-pump transfer system to mobilize and retrieve the sludges from the tanks. The retrieved sludges will be transferred through in-line grinders and consolidated in GAAT tank W-9 prior to transfer to the BVEST W-21 or W-23. The pulse-jet system in W-21 or W-23 will be used to transfer the GAAT sludges to the MVSTs. The schedule may dictate that one or more GAAT tanks be transferred directly to the BVESTs without interim consolidation in W-9. Due to the inherent risks of the high-pressure system used for the CSEE, process water will be used instead of the existing contaminated supernate liquids to mobilize and retrieve the sludges. The bulk of the excess sluice water will be removed from the slurry at W-9 by settling and decanting. The decanted liquid will be transferred directly to the BVEST evaporator from W-9. The sluice water used to transfer the GAAT slurry to the MVSTs from the W-21 or 23 will be decanted and returned to the BVESTs for further sluicing of sludges or for processing in the evaporator. The initial water balance scenarios assumed that the contents of the GAAT tanks would be transferred directly to the MVSTs one at a time, with several months allowed in between transfers for moving the MLDUA equipment to the next tank. This complicated the schedule by having to interrupt transfers from other tank farms to allow for the periodic GAAT transfers. The new plan for consolidating in W-9 can be performed outside the MVST transfer schedule and allows other tank farms to complete sludge transfers to the MVSTs without delays. After consolidation, the sludge in W-9 will be transferred to the BVESTS and on to the MVSTs in a continuous transfer campaign.

The BVEST sludges will be mobilized using a pulse-jet mixing system designed and fabricated by AEA Technology of the United Kingdom. This system operates by moving fluid in and out of the existing tank nozzles. BVEST tanks W-21,22, and 23 have three opposing pairs of 3-in.-diameter nozzles located along the length of the tank. C-1 and C-2 tanks do not have nozzles but have manhole extensions installed to provide access for nozzles. The centerline of the nozzles in the W-tanks is nominally 8 in. off the bottom of the tank. Each nozzle will be connected to one of the pulse-jet system charge vessels. Fluidic pumps are used to create a vacuum in the charge vessel, pull fluid from the tank into the vessel, and discharge the fluid under pressure into the tank. The pulsing of the fluid back into the tank mixes the sludge with the tank supernate to produce a uniform mixture. The frequency and pressure used for the pulses are adjusted to control the degree of mixing. Existing Moyno pumps will be used to transfer the mixed slurry to the MVSTs. Since existing supernate is used, concentrating by evaporation is not necessary and the liquids must be separated from the sludge and transferred either to the CITs or returned to the BVESTs for further sludge mixing and transfer.

4.2 MVST SLS METHODS

The methods used to transfer the sludges and to manage the supernate liquids will have a significant impact on the cost and schedule for these operations. Since the MVSTs have limited capacity for holding the sluice waters, SLS is necessary to separate the sluice water from the sludge and remove it from the MVSTs. The sluice water will be managed in one of three ways: (1) transfer to evaporator systems for concentrating, (2) transfer to the BVESTs to recycle as sluice water, or (3) transfer to the CITs for storage. If the Out-of-Tank evaporator (OTE) system is to be used to concentrate the sluice water, the feed to the evaporator must be free of TRU sludges. Traces of TRU sludges in the OTE feed will lead to significant contamination concerns because the OTE system is located in Building 7877 and is designed for hands-on maintenance activities. The liquids sent to the CITs must also be free of TRU sludges because the new tanks are not designed for mixing and mobilizing the sludge and because ORNL made a commitment to the Tennessee Department of the Environment and Conservation not to store TRU sludges in the new tanks.

Three different methods for separating and managing the liquids and sludges were evaluated: (1) single-stage gravity settling, (2) two-stage gravity settling, and (3) filtration. Flow sheets for these methods are shown in Fig. 2.

4.2.1 Single-Stage Gravity Settling

Single-stage gravity settling involves an operation presently performed by Waste Management Operations (WMO) prior to transferring supernate between tanks. If sludge has been recently added to a particular tank, the sludges are allowed to settle for a two-month period. The dip leg for the suction line to the pump is well below the level of the sludge in the tank; therefore, the transfer to the targeted tank is preceded by transferring a "slug" of tank sludge/liquid slurry to another MVST designated as the "catch" tank. Following the slug transfer, it is assumed that the sludges are compacted enough to create a cavity around the dip leg and allow transfer of

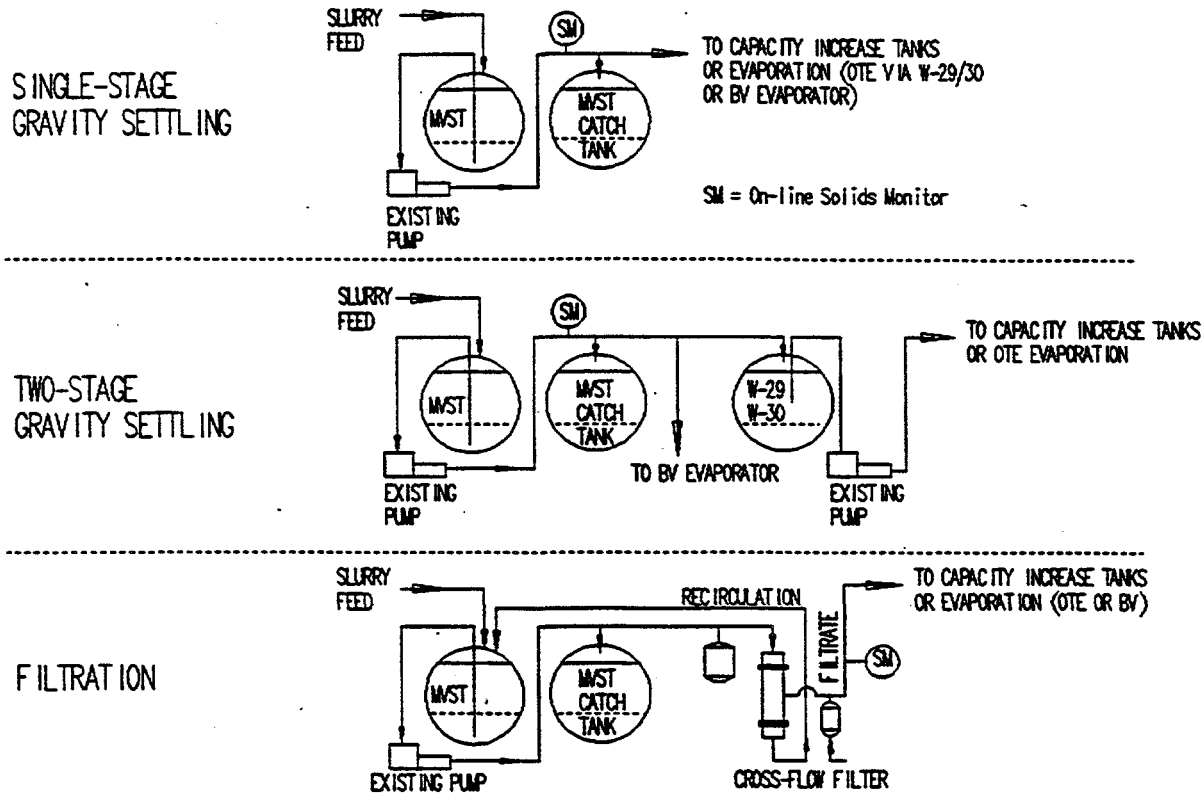

Fig. 2. Solid/liquid separation flow sheets.

supernate with a relatively low suspended solids content to the targeted tank. It was assumed that some carryover of sludge would occur during these transfers. For a sludge that had not recently been disturbed, it was assumed that 1% of the sludge would be carried over to the CITs or other receiving tanks during the transfer (i.e., for a tank containing 10,000 gal of sludge, 100 gal of sludge would be carried over). For sludge that had settled for two months in the MVSTs after a sluicing operation, it was assumed it would be much more fluid in nature and that 5% of the new sludge would be carried over to the receiving tank. Since very little is known about the physical characteristics of these sludges, the assumptions made are based on best engineering judgement and the past qualitative testing by Fowler,[3] as described in Sect. 4.6. Though it is strongly suspected that carryover will occur, the actual amounts could be less than or greater than the amounts estimated.

4.2.2 Two-Stage Gravity Settling

Two-stage gravity settling involves an operation presently performed by WMO prior to performing a Liquid Waste Solidification Project (LWSP) or OTE. In this operation, the single-stage settling described above is followed by transfer of the supernate to either of tanks W29 or W30 to allow additional settling prior to transfer to the CITs. W29 and W30 are equipped with decant legs which reach no lower than the 50% (25,000-gal) level in the tanks. Rough estimates indicate that each of these tanks contain about 11,000 gal of sludge. It was assumed that one month would be allowed for the second stage of settling. It has been shown that supernates decanted from W29/30 for LWSP do not contain significant amounts of sludge; therefore, it was assumed that preexisting sludges in the MVSTs would not carry over into the CITs when two-stage settling is performed. Recently transferred sludges that have been pulverized to particle sizes less than 100 μm, will be more difficult to settle, and it was assumed that the second stage of settling would reduce carryover to 0.5% of the volume of the new sludge.

If sludge settling actually occurs faster than the one to two months assumed for gravity settling, there is a potential opportunity to shorten the transfer schedule by reducing the settling time. Sludge settling tests with actual samples of MVST Tank W-25 sludge and GAAT sludge were performed to determine the settling rate of the solids. The tests indicated that the bulk of the sludge would settle in less than one week; however, the settled sludge volume was larger and less dense than the original sludge. The data indicated that it would take much longer for the sludge to compress to its original volume. Though the flow characteristics of the sludge layer were not determined in the hot testing, it was assumed that time must be allowed for the sludge to compress to a level close to its original volume and thus minimize the amount of sludge that would be carried over to W-29 and W-30 decant tanks during the two-stage settling. On this basis, it was decided not to reduce the recommended settling time for the sludges.

4.2.3 Cross-Flow Filtration

Filtration involves the installation and use of a cross-flow filtration system for treatment of all supernate liquids during the transfers. Cross-flow filtration involves the use of porous metal

tubular filters through which the supernate is pumped under pressure. The filter element consists of a tube bundle within a cylindrical shell, similar to a shell and tube heat exchanger. The liquid/solid mixture is pumped through the tube side of the element at a fairly high velocity and recirculated to the feed tank under moderate pressure (20 to 40 psi). The solids content of the filtrate would be extremely low, and it was assumed that no measurable quantity of sludge would be transferred with the filtrate. The filtrate rate was assumed to be about 5 gal/min, which is what would be expected using a 50-ft^2 surface area filter element (about 10 ft long and 12 in. in diam). Additional filter elements could be added to increase filtrate flow rate, though this would increase pump requirements for recirculating the slurry through the elements. The filter element is backwashed by applying a pressurized pulse of fluid in the opposite direction of the filtrate flow from the shell side of the filter element. This is performed using air pressure from a cylinder installed on the filtrate piping. The filter can also be chemically cleaned with dilute nitric acid if it becomes plugged. It was assumed that the MVSTs would serve as feed tanks for the filter and no settling time would be necessary prior to processing.

4.2.4 Discussion of SLS Methods

Though the single-stage gravity settling is the simplest method and can be done in a relatively short time, it is the most likely to result in significant carryover of TRU sludge. The filtration method is the only method out of the three that is capable of removing all TRU sludges from the liquids and meeting the needs of OTE and the commitment made to Tennessee Department of Environment and Conservation. However, filtration will require time and money for designing, fabricating, and installing. Two-stage settling is simple and much more effective than single-stage settling. However, there are several real and potential problems associated with two-stage settling: (1) available tank space is occupied by settling activities, (2) the settling duration has a significant impact on the overall consolidation schedule, (3) TRU solids may be carried over to the CITs or OTE system, and (4) the sludge level in tanks W-29 and W-30 may increase to the point that the second stage of decanting is not possible.

Earlier water balance scenarios illustrated the schedule advantage of single-stage settling and filtration SLS methods. These scenarios also indicated that the transfers would not be complete until the 2002 time frame if two-stage settling were used. However, the early analyses were based on outdated tank farm transfer schedules. When these schedules were updated and accelerated, the two-stage settling method resulted in completion of the sludge consolidation in FY 2000, within the time required for private sector construction activities. Since two-stage settling will likely result in the transfer of small amounts of sludge to the CITs, the commitment to TDEC must be renegotiated. Plans must also be prepared for the eventual accumulation of sludge in the CITs and the potential costs for sludge removal. Additionally, the first stage of settling must allow sludges to settle long enough to minimize carryover during transfer to decant tanks W-29 and W-30. The baseline water balance scenario assumes the use of two-stage gravity settling for SLS during MVST sludge consolidation.

4.3 EVAPORATION OF SLUICE WATERS AND SUPERNATE

The OTE system will be used to create additional storage space in the MVSTs and CITs by concentrating the supernate to nitrate levels up to 8 *M*. Due to the relatively low processing rate for OTE, the large-volume, dilute sluice waters from the GAAT sludge transfers will be returned to the BVEST evaporator for processing. The BVEST evaporator system can produce distillate at a rate of 5 gpm compared with the OTE system rate of 1 gpm. The BVEST evaporator, however, cannot be used to concentrate the supernate to concentrations to greater than 4 *M* nitrate due to pipeline transfer limitations.

4.4 ON-LINE SOLIDS MONITORING

For mobilization, mixing, and transport of sludges to the MVSTs, it will be important that the concentration of solids in the slurry be monitored and controlled. The solids content of the slurry must be high enough to avoid transport of large quantities of excess water to the MVSTs but low enough to avoid conditions that could lead to plugging of the slurry transfer pipeline. Sampling of the slurries and analysis can be performed to monitor solids content; however, sampling and analysis is slow, labor intensive, and does not provide real-time data. This study assumes that on-line solids-monitoring devices are used during the slurry transfers where appropriate. The installation of on-line devices requires short-term radiation exposure and a significant investment; however, the advantages include (1) the minimization of radiation exposure from sampling and analysis of hot samples, (2) obtaining real-time indication of slurry conditions, and (3) the ability to respond quickly to process changes. Section 6.2 includes a comparison of costs and operating issues for sampling and on-line solids monitoring.

4.5 SOLIDS CONTENT OF TRANSPORTED SLUDGES

The amount of sluice water used to transport the tank sludges though the pipeline to the MVSTs has a direct impact on the MVST capacity and the time required to manage the sluice waters by evaporation or by transfer to the CITs (for storage) or BVEST (for additional sluicing). The amount of sluice water or solids content assumed during transport depends on the retrieval and transfer method chosen for each particular tank farm.

In the previous water balance analyses, it was assumed that the solids content for the slurry transfer would be a maximum of 5 wt% for all transfers. This was a conservatively low solids content compared with what has been accomplished in the past during the 1984 Gunite tank transfers. Transfers of 15 wt% and sometimes higher solids content slurries were achieved using bentonite suspending agents. The 5 wt% assumption was based on the likelihood that (1) the mobilization of GAAT sludge heals and the scarifying of the gunite tank walls would require enough sluice water to dilute the slurries to 5 wt% or less and (2) sluicing for the BVEST sludge would also require a large excess of sluice water. However, new information indicated that the solids content would depend on the retrieval method chosen for each particular tank farm.

GAAT sludge transfer plans have changed several times, which has made it necessary to modify the assumption for solids content of the GAAT slurries. One of the former plans for the GAAT sludge retrieval included the use of a conditioning system to grind and dewater the slurries. Under these conditions, it was assumed that the GAAT sludge could be transferred to the MVSTs at an overall concentration of 10 wt%. However, a later decision was made to consolidate GAAT sludges in tank W-9 for settling and decanting of sluice water in lieu of installing the conditioning system. In-line grinding of the sludge will be performed during transfer to W-9. After decanting the retrieval waters to the BVEST evaporator, W-9 sludges will be retrieved and transferred by the same method as the other GAAT tanks to BVEST tank W-21 or W-23. The pulse-jet mixing system installed in W-21 and W-23 in FY 1997 will subsequently be used to remobilize the GAAT sludges and transfer them to the MVSTs. Since the GAAT conditioning system will not be available, the latest consolidation scenario assumed an average 5 wt% slurry for transport of GAAT sludge to the BVESTs and from the BVESTs to the MVSTs.

For the OHF transfers, characterization information suggests that mixing all the supernates and sludges in these tanks will result in a slurry with a solids content of about 8 wt%. The current OHF plans indicate that the volume of existing supernate should be adequate for retrieval and transport of the sludges; therefore, the anticipated volume of water to be managed at the MVSTs was assumed to be the volume of the existing OHF supernate.

In the case of the BVEST sludges, the use of the pulse-jet system is expected to make possible the retrieval and transfer of 10% solids slurries to the MVSTs. Since mixing and transfer of BVEST sludges will be performed simultaneously, the use of on-line solids monitors is critical for control of the process.

4.6 CARRYOVER OF SUSPENDED SOLIDS TO THE MVST CAPACITY INCREASE TANKS

Since there is a lack of physical data on the sludges, only best engineering judgement could be used to assume the amount of carryover that would occur as a consequence of decanting after gravity settling of the sludges. Initial scenarios assumed carryover of 1% of preexisting sludge and 5% of newly transferred sludge in the MVSTs to the CITs.

Tests were performed by Vic Fowler in 1994 that provide some qualitative data using a 250-gal Plexiglas model of an MVST and a simulated sludge.[3] The test program was originally performed to help Waste Management Operations determine the optimum operating procedure for minimizing sludge carryover to tanks W-29 and W-30 after single-stage settling when preparing for a LWSP campaign. The tests were focussed on comparing transfer procedures, not determining exact quantities of sludge that would be transferred. The main findings of the study were as follows:

1. The procedure being used by Waste Management Operations involved recirculating the tank using the existing progressive cavity (Moyno) pumps prior to beginning the

supernate transfer. This procedure reduces sludge carryover by clearing out sludge near the suction leg and creating a depression in the sludge layer.

2. Carryover could be reduced further by limiting the quantity of supernate transferred to 90% or less of the total supernate volume. This avoids the fluidization of the sludge caused by the higher velocity travel of the supernate across the surface of the sludge as the supernate level approaches the sludge level.

3. It was qualitatively estimated that sludge carryover could be limited to less than 125 gal for a 25,000-gal supernate transfer from a tank containing 18,850 gal of sludge; that is, 0.66% of the sludge in the tank is carried over.

Since the Fowler study result was qualitative in nature, used simulated sludge, and was reasonable close to the assumed 1% for the preexisting sludge, the assumptions made for the water balance analyses were not changed.

5. SCHEDULE ASSUMPTIONS

5.1 TANK FARM TRANSFER SCHEDULE

The schedule for tank farm transfers has been modified many times since the initiation of the water balance studies. Earlier studies showed that the consolidation in the MVSTs required too much time based on the initial tank farm transfer plans. Waste Management and Environmental Restoration Programs recently developed an integrated schedule for the transfers, which has accelerated the transfer plans for the tank farms to meet the required TRU program schedule for sludge consolidation.

In initial water balance schedules, the BVESTs were not to be transferred until after the completion of the GAAT tanks in FY 2000. Recent development of the BVEST Incentive Task Order (ITO) project involves a technology demonstration of the pulse-jet system in BVEST tank W-21 to occur in September 1997. It is now assumed that the sludge transfer from W-21 will be performed as part of the ITO. This transfer will be followed by transfer of all of the OHF tank sludges, which will require about six months, beginning in January 1998. The BVEST transfers will be resumed after OHF with W-23, W-22, C-1, and C-2.

The retrieval of sludge and scarifying of the walls of the Gunite tanks is expected to require about six months per tank. The consolidation in W-9 will begin with the North Tank Farm tanks W-3 and W-4 in August 1997 and continue with South Tank Farm (STF) tanks over the period of about two years. To reduce the schedule requirement by about three months, the baseline plan calls for the early transfer of one of the STF tanks to the MVSTs via the BVEST mixing and transfer system beginning in October 1999. The W-9 transfer to the MVSTs via the BVESTs is expected to begin by February 2000.

5.2 SCHEDULE FOR MVST CIT COMPLETION

It was assumed in earlier scenarios that the MVST CITs would not be in service until January 1999. This assumption was considered unacceptable because it was a key factor in delaying the overall consolidation schedule beyond FY 2000. In follow-on scenarios, it was assumed that the CIT schedule could be accelerated to a completion date of July 1998. This is a key schedule assumption because the CITs create critical storage capacity for sluice waters from the MVST sludge consolidation.

6. EQUIPMENT/PIPELINE COSTS

The following section provides information on the potential cost impacts of pipeline modifications and equipment additions necessary for management of sluice waters transferred to the MVSTs along with the sludges.

6.1 PIPELINE MODIFICATIONS

Pipeline modifications are necessary to increase the processing rate of the OTE system and for allowing the use of Building 7877 for OTE, the Cesium Removal Demonstration (CsRD) System, and/or LWSP from the CITs. The estimated cost of the CIT pipeline to Building 7877 is $550K to $650K based on previous experience with the MVST Decant System piping necessary to connect W-29 and W-30 to Building 7877. The cost of the MVST Decant System in FY 1987 was $505K. This included purchase and installation of the W-29 and W-30 dip legs, about 200 ft of stainless steel double-contained shielded piping, and the associated pump module. It is assumed that the pipeline installation was 75% of the cost or $380K. Escalating 5% per year for 10 years results in an estimated cost of about $580K. The feasibility and costs for installing the decant system as part of the MVST CIT construction project is currently being evaluated.

6.2 SOLIDS MONITORING COSTS

Solids monitoring instrumentation would allow on-line monitoring of suspended solids content during transfers. The scenarios described assume that on-line solids monitoring capability is provided. If on-line monitoring is not provided, manual sampling of decanted liquids or filtrate must be performed. A qualitative comparison of costs and issues associated with on-line monitoring and manual sampling was performed. The results indicate that the costs are comparable. Radiation exposure is received by workers in both cases: (1) during installation of on-line solids monitors and (2) during handling and analysis of sludge samples. A summary of the estimated costs for the two solids monitoring alternatives is given in Table 2.

Table 2. Comparison Summary of Solids Monitoring Methods

Criteria	Sampling and analysis	On-line solids monitoring
Equipment costs	$10K [lead pigs, personal protective equipment (PPE)]	$20 to $30K
Installation costs	$5K	$50K[a]
Routine labor costs	$30K (sampling)	$5K (calibration)
Analytical costs	$40K (100 samples @ 4 h per sample, $100/h)	NA
Radiation exposure	Routine low exposures from sample handling and analysis.	Single moderate exposure during installation of monitor. Infrequent low exposures during calibration.
Schedule impact	Several-month impact from sampling time and waiting for analytical results before transfer of slurries.	Minimal
Waste disposal costs	$10K (handling and documentation)	Included in installation costs
Future decontamination and decommissioning	NA	$20 to $30K (removal and disposal of monitor)
Total estimated costs	$95K	$95 to $115K

[a]Cost assumptions:

Work plans, permits - 160 h	Waste disposal - 40 h
Engineering, drawings - 80 h	Materials - $2K (PPE)
Installation - 200 h	30% contingency - 168 h
Electrical, calibration - 80 h	(728 h × $67/h)+ $2 = $50K

6.3 CROSS-FLOW FILTER SYSTEM COSTS

Previous water balance studies indicate that the addition of cross-flow filtration provides operational flexibility and can compress the transfer schedule by as much as 12 months. The amount of sludge carried over to the CITs is assumed to be insignificant, and there would be no future costs associated with retrieval and treatment of CIT sludge. The cost of design, installation, operations, and D&D for the filtration system is estimated at $1.85M and is broken down as follows:

Cost estimate for cross-flow filter system at the MVSTs

Task	Cost	
Design	$ 130,000	Design by private sector
Equipment and fabrication	$ 700,000	Procure major components and fabricate skid-mounted system by private sector
Documentation	$ 100,000	Environmental compliance documentation and safety study
Training	$ 40,000	
Assessments	$ 60,000	
Installation	$ 220,000	Install in cubical adjacent to MVSTs
Operations	$ 200,000	Startup and operations
D&D	$ 400,000	Future cost
Total cost	$1,850,000	

Filtration provides the capability to reduce the time required for managing sluice waters and compress the overall consolidation schedule. Gravity settling for 25,000 gal of slurried sludge at the MVSTs will require a minimum of one month. If the cross-flow filter is designed for a filtrate flow rate of 5 gal/min, filtration of 25,000 gal would require only 3.5 days. This could be particularly important if schedule delays are experienced due to equipment problems or other causes.

6.4 POTENTIAL COST OF FITTING CITS FOR SLUDGE MIXING AND RETRIEVAL

To determine the cost consequences of adding sludges to the CITs, the cost of mixing, retrieving, and treating the sludges was estimated. It was assumed that the treatment of the sludges would be included in the private sector contract for treatment of the MVST sludges. The cost of the mixing system was estimated based on previous cost estimates for mobilizing sludges in the MVSTs and BVESTs. In September 1995, a proposal entitled "MVST Sludge Mobilization Demonstration Proposal" (X-OE-773) was prepared by the Lockheed Martin Energy Systems Central Engineering Services and the Chemical Technology Division. The estimated cost of the preferred option, involving installation of a combination single-point sluicer and submerged-jet sluicer system, was $4.2M. In October 1996, an Incentive Task Order proposal entitled "BVEST Sludge Mixing Demonstration and Transfer" was prepared which proposes the use of a pulse-jet mixing system designed and fabricated by AEA Technology. The estimated cost of the demonstration was $3.5M. Since the CIT tanks are larger than both the MVSTs and the BVESTs, the costs will be slightly higher and estimated to be about $4.5M.

7. SUMMARY OF BASELINE WATER BALANCE ANALYSIS

Table 3 summarizes the basis for the baseline water balance scenario. This scenario will serve as a baseline for subsequent analyses. Factors that significantly affect cost and schedule of the plan

Table 3. Assumptions and conditions for the baseline water balance analysis

Parameter	Description
Solids monitoring	On-line solids-monitoring devices are used where appropriate for transfer of sludges to the MVSTs.
Solid/liquid separation	- Two-stage settling will be used at the MVSTs to separate sluice water and transfer to either the CIT system or to the BVESTs for evaporation or for mobilizing additional BVEST sludges. - A two-month settling time is allowed for the first stage and one-month settling for the second stage. - If liquids are to be transferred to the BVESTs as either recycled sluice water or evaporator feed, single-stage settling is provided with a one-month duration for settling.
Sludge carryover	- 0.5% of newly transferred sludge will carry over into the CITs. - None of the preexisting sludge will carry over during two- stage gravity settling.
Solids content of slurry	OHF - 8 wt% solids GAAT - 5 wt% solids BVEST - 10 wt% solids
Out-of-tank evaporator	- OTE is used to concentrate existing supernates at the MVSTs to a maximum of 8 M nitrate. - Treatment capacity is 1 gal/min. Each OTE campaign lasts about one month. - A total of 43,000 gal of distillate is removed from the MVSTs in four OTE campaigns.
BVEST evaporation	- Dilute sluice waters are transferred to the BVEST evaporator for processing. - Peak processing capacity is 5 gal/min. - It is acceptable to transfer small amounts of sludge to the BVEST feed tank W-22.
Newly generated liquid low level waste (LLLW)	- Newly generated LLLW is produced at a rate of 13,000 gal/year. - Newly generated LLLW is stored in BVESTs.
Pipeline flushes	1000 gal of process water is used to flush the MVST pipeline after each transfer.
BVEST transfers	- W-21 is transferred in 9/97. - W-22, W-23, C-1, and C-2 are transferred after OHF. - Existing supernate is used for sluicing sludges. Supernate is recycled from the MVSTs for additional transfers. - W-22 will use dilute evaporator feed supernate for sludge transfer.
OHF transfers	- Transfers begin in January 1998 and are complete in six months. - Existing supernate is used in transfers. - Little or no supernate recycle is necessary.
GAAT transfers	- Most of the GAAT sludge is consolidated in W-9 prior to transfer. - Early transfer of one STF tank begins September 1999. - W-9 transfer begins February 2000. - Existing GAAT supernate is transferred directly to the BVEST evaporator for processing. - Process water is used to retrieve and transfer the sludges. - The majority of the water used to retrieve the sludges is decanted from W-9 and transferred directly to the BVEST evaporator.
CIT system	- CITs are in service by July 1998. - It is acceptable to transfer small amounts of TRU sludge to the CITs.

include (1) the schedule for the tank farm transfer operations, (2) the volume of sluice water, (3) the in-service date for the CITs, and (4) the time required for settle/decant activities. If an assumption is revised, the water balance must be reanalyzed to determine the impact on the overall schedule.

A time line schedule for this transfer scenario is given in Fig. 3. A summary of initial and final tank volumes and supernate nitrate and cesium content for the baseline scenario is provided in Table 4. The spread sheet showing detailed results of tank transfer activities with volume and composition data is provided in Attachment A.

The results of this analysis indicate that the consolidation of TRU sludges in the MVSTs will be complete by September 2000. There are several key events associated with this plan. The BVEST sludge mobilization demonstration must be successful using the pulse-jet system; otherwise, an alternative system will have to be designed and installed, resulting in significant delays. The MLDUA retrieval system, a GAAT technology demonstration, must be successfully operated and the plan for consolidation in W-9 must be approved. As experience is gained in working with the MLDUA and associated equipment, the actual time required for the GAAT operation may change. Similarly, the OHF retrieval and transfer equipment must operate as planned to meet this schedule. Key events such as these and changes in the above assumptions can significantly impact the integrated transfer schedule. Changes in the assumptions must be noted and the water balance calculations rerun as appropriate to evaluate schedule impacts.

8. REFERENCES

1. T. E. Kent and S. M. DePaoli, personal communication to F. J. Homan, June 19, 1996.

2. T. E. Kent and S. M. DePaoli, personal communication to F. J. Homan, July 11, 1996.

3. V. L. Fowler, personal communication to C. B. Scott, Mar. 24, 1994.

ID	Task Name	Duration	Start	Finish
1	Cesium Removal Demonstration	239d	10/1/96	8/29/97
2	Transfer BVEST W-21	22d	9/1/97	9/30/97
3	OTE Campaign #1	22d	10/1/97	10/30/97
4	OTE Campaign #2	23d	12/1/97	12/31/97
5	Transfer OHF T-1	11d	1/1/98	1/15/98
6	OTE Campaign #3	20d	2/2/98	2/28/98
7	Transfer OHF T-2	10d	3/2/98	3/13/98
8	Transfer OHF T-4	11d	4/1/98	4/15/98
9	Transfer OHF T-3	11d	4/16/98	4/30/98
10	Transfer OHF T-9	11d	5/1/98	5/15/98
11	OTE Campaign #4	22d	6/1/98	6/30/98
12	Capacity Increase Tanks in Service	0d	7/1/98	7/1/98
13	Transfer BVEST W-23	66d	7/1/98	9/30/98
14	Transfer BVEST W-22	21d	11/2/98	11/30/98
15	Transfer BVEST C-1	22d	4/1/99	4/30/99
16	Transfer BVEST C-2	20d	5/3/99	5/30/99
17	GAAT W-9 sludge consolidation and scabbling activities	522d	9/1/97	8/31/99
18	Early transfer of one STF tank to BVEST W-23	22d	9/1/99	9/30/99
19	Transfer W-23 to MVSTs	22d	10/1/99	11/1/99
20	Transfer GAAT W-9 to MVSTs via BVESTs	129d	2/1/00	7/30/00
21	Transfers to Evaporator and CITs	45d	7/31/00	9/29/00

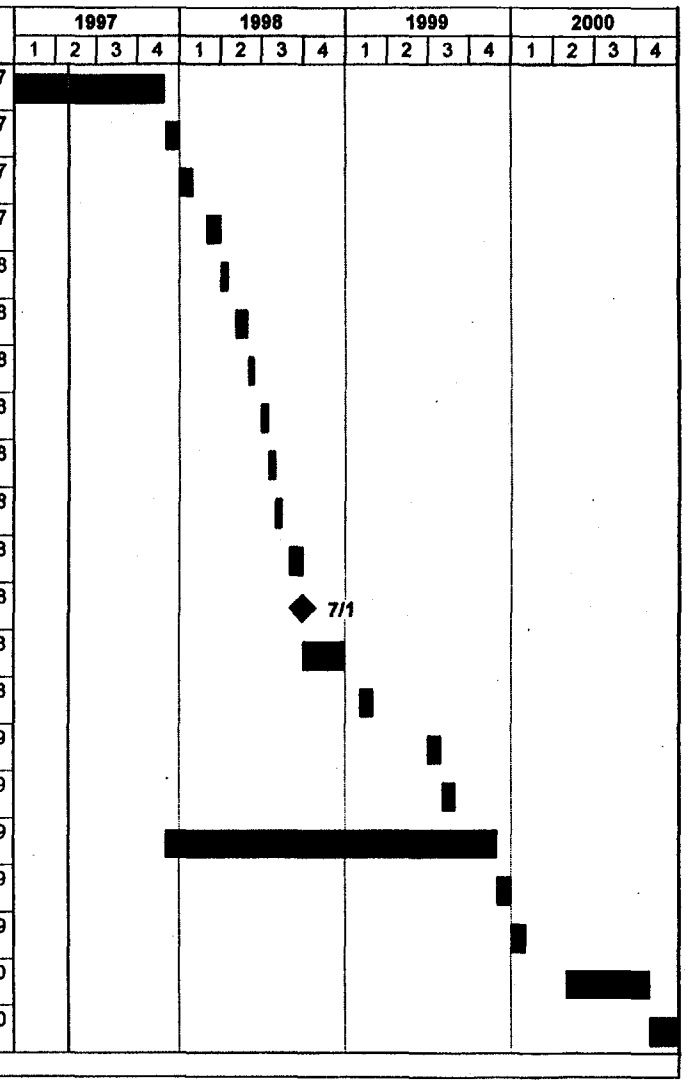

Fig. 3. Schedule for consolidation of ORNL RH-TRU sludges in the Melton Valley Storage Tanks.

Table 4. Summary of MVST and CIT conditions before and after sludge consolidation

Parameter		W-24	W-25	W-26	W-27	W-28	W-29	W-30	W-31	MVST total	CITs
Sludge vol, gal	Initial	13,200	23,400	15,100	17,700	3,800	11,000	11,000	6,400	101,600	0
	Final	25,500	27,100	26,200	26,800	25,400	15,100	15,400	27,300	188,800	107
Supernate vol, gal	Initial	10,700	23,400	24,300	25,300	36,900	11,200	29,600	35,000	196,400	0
	Final	2,000	1,960	1,930	1,960	2,020	7,500	12,400	2,030	32,300	295,000
Supernate NO_3 conc., mol/L	Initial	3.18	3.85	4.82	5.52	6.85	3.33	4.88	5.02	--	--
	Final	0.001	0.6	0.004	0.004	0.05	4.5	4.07	0.09	--	5.06
Supernate ^{137}Cs conc., Bq/mL	Initial	1.1E+6	1.2E+6	1.4E+6	3.3E+5	6.2E+5	5.0E+5	5.6E+5	4.8E+5	--	--
	Final	1.9E+3	1.3E+5	7.2E+3	1.5E+3	2.4E+4	6.1E+5	26E+5	4.2E+4	--	6.02E+5

APPENDIX A:

WATER BALANCE SPREAD SHEET FOR BASELINE SCENARIO

GAAT SLUDGE CONSOLIDATION IN W9 (except W8). SETTLING ONLY.

DATE	SLURRIES = 5 wt% SOLIDS: Newly Gen. Conc	PWTP Conc to W21	Other LLLW Conc.	New gen to tank	Project	M tr	tank split	Conc volume trans	PW sluice volume trans	FROM	TO	Sludge volume trans	FROM	TO	CsR (Cesium removal) OTE (out-of-tank evap): Volume out of W-29	Volume into W-30	Cesium DF	Nitrate in Evap	Supern W-24	Supern W-25
1/96	0	310	0	C1															9,300	20,800
2/96	0	340	0	C1															9,300	20,800
3/96	1,580	840	0	C1															9,300	20,800
4/96	0	460	0	C1											22,500	17,500			9,300	20,800
5/96	0	290	0	C1															9,300	20,800
6/96	0	520	0	C1															9,300	20,800
7/96	0	380	0	C1	CsRD														9,300	20,800
8/96	0	243	0	C1	CsRD; updated sludge & s														10,700	23,400
9/96	2,179	330	0	C1	CsRD														10,700	23,400
10/96	0	400	0	C1	CsRD														10,700	23,400
11/96	0	400	0	C1	CsRD			24,000		W27	W29								10,700	23,400
12/96	2,000	400	0	C1	CsRD			17,000		W30	W27								10,700	23,400
1/97	0	400	0	C1	CsRD										23,000	23,000	100		10,700	23,400
2/97	0	400	0	C1	CsRD														10,700	23,400
3/97	2,000	400	0	C1	CsRD														10,700	23,400
4/97	0	400	0	C1	CsRD														10,700	23,400
5/97	0	400	0	C1	CsRD														10,700	23,400
6/97	2,000	400	0	C1	CsRD complete														10,700	23,400
7/97	0	400	0	C1	CsRD/cleanup														10,700	23,400
		0	0	C1	TRANS TO BV			14,000		W28	W21	38	W28	W21					10,700	23,400
		0	0	C1				21,000		W28	C1	38	W28	C1					10,700	23,400
8/97	0	400	0	C1	TRANS FOR OTE			7,000		W24	W29	132	W24	W29					3,700	23,400
		0	0	C1	& OTE upgrades			16,500		W25	W29	234	W25	W29					3,700	6,900
		0	0	C1				24,000		W30	W24								27,700	6,900
9/97	2,400	0	0	C1	SLUICE W21	b	0.53	33,325		W21	W28	5,797	W21	W28					27,700	6,900
		0	0	C1		i		1,000		FLUSH	W28								27,700	6,900
		0	0	C1		b		27,000		C1	W21	16	C1	W21					27,700	6,900
		0	0	C1		b	0.08	5,030		W21	W26	875	W21	W26					27,700	6,900
		0	0	C1		i		1,000		FLUSH	W26								27,700	6,900
		0	0	C1		b	0.13	8,174		W21	W27	1,422	W21	W27					27,700	6,900
		0	0	C1		i		1,000		FLUSH	W27								27,700	6,900
		0	0	C1		b	0.21	13,204		W21	W25	2,297	W21	W25					27,700	20,104
		0	0	C1		i		1,000		FLUSH	W25								27,700	21,104
		0	0	C1		b	0.05	2,819		W21	W31	563	W21	W31					27,700	21,104
		0	0	C1		i		1,000		FLUSH	W31								27,700	21,104
10/97	400	0	0	C1	OTE #1										24,000	7,700		12.8	27,700	21,104
11/97	400	0	0	C1	TRANS FOR OTE			23,300		W24	W29	132	W24	W29					4,400	21,104
12/97	2,400	0	0	C1	OTE #2										24,000	13,500		7.9	4,400	21,104
1/98	400	0	0	C1	INTERTANK TRANS			21,000		W30	W23								4,400	21,104
		0	0	C1	TRANS FOR OTE			24,000		W31	W29	92	W31	W29					4,400	21,104
		0	0	C1	SLUICE T-1	i		7,900		T1	W31	800	T1	W31					4,400	21,104
		0	0	C1		i		1,000		FLUSH	W31								4,400	21,104
2/98	400	0	0	C1	OTE #3										24,000	14,700		7.8	4,400	21,104
3/98	2,400	0	0	C1	SLUICE T-2	i		9,500		T2	W31	1,300	T2	W31					4,400	21,104
		0	0	C1		i		1,000		FLUSH	W31								4,400	21,104
		0	0	C1															4,400	21,104
		0	0	C1															4,400	21,104
		0	0	C1															4,400	21,104
4/98	400	0	0	C1	SLUICE T-4	i		13,700		T4	W24	1,400	T4	W24					18,100	21,104
		0	0	C1		i		1,000		FLUSH	W24								18,100	21,104
		0	0	C1	INTERTANK TRANS			5,000		W30	W24	0	W30	W24					24,100	21,104
		0	0	C1	SLUICE T-3	i		900		T3	W24	2,100	T3	W24					25,000	21,104
		0	0	C1		i		1,000		FLUSH	W24								26,000	21,104
		0	0	C1	TRANS FOR SETTLING			20,200		W27	W29	248	W27	W29					26,000	21,104
5/98	400	0	0	C1	SLUICE T9	i		4,700		T9	W27	500	T9	W27					26,000	21,104
		0	0	C1	FLUSH	i		1,000		FLUSH	W27								26,000	21,104
6/98	2,400	0	0	C1	OTE #4										20,200	13,000		7.7	26,000	21,104
		0	12,473	C1	TRANS TO BV EVAP			29,000		W31	BV								26,000	21,104

GAAT SLUDGE CONSOLIDATION IN W9 (except W8). SETTLING ONLY.

DATE	SLURRIES = 5 wt% SOLIDS Newly Gen. Conc	PWTP Conc to W21	Other LLLW Conc.	New gen to tank	Project	M tr	tank split	Conc volume trans	PW sluice volume trans	FROM	TO	Sludge volume trans	FROM	TO	CsR (Cesium removal) OTE (out-of-tank evap) Volume out of W-29	Volume into W-30	Cesium DF	Nitrate in Evap	Supern W-24	Supern W-25
		0	0	C1	TRANS FOR SETTLING			23,500		W28	W29	324	W28	W29					26,000	21,104
7/98	400	0	0	C1	INTERTANK TRANS			20,000		W24	C2	294	W24	C2					6,000	21,104
		0	0	C1	TRANS TO CIT			26,000		W30	CIT	0	W30	CIT					6,000	21,104
		0	0	C1	SLUICE W23	b	0.20	21,904		W23	W31	3,280	W23	W31					6,000	21,104
		0	0	C1		i		1,000		FLUSH	W24								7,000	21,104
8/98	400	0	0	C1	INTERTANK TRANS	b		24,000		C1	W23	15	C1	W23					7,000	21,104
		0	0	C1	SLUICE W23	b	0.05	5,476		W23	W31	820	W23	W31					7,000	21,104
		0	0	C1		i		1,000		FLUSH	W31								7,000	21,104
		0	0	C1	INTERTANK TRANS	b		16,000		C2	W23	32	C2	W23					7,000	21,104
		0	0	C1	SLUICE W23	b	0.17	18,618		W23	W28	2,788	W23	W28					7,000	21,104
		0	0	C1		i		1,000		FLUSH	W28								7,000	21,104
		0	0	C1	INTERTANK TRANS	b		20,000		C2	W23	30	C2	W23					7,000	21,104
		0	0	C1	SLUICE W23	b	0.18	19,713		W23	W24	2,952	W23	W24					26,713	21,104
		0	0	C1		i		1,000		FLUSH	W24								27,713	21,104
		0	0	C1	INTERTANK TRANS			23,000		W26	W23	195	W26	W23					27,713	21,104
9/98	2,400	0	0	W23	TRANS TO CIT			23,500		W29	CIT	6	W29	CIT					27,713	21,104
		0	0	W23	TRANS FOR SETTLING			25,000		W31	W30	398	W31	W30					27,713	21,104
		0	0	W23				6,000		W31	W29	378	W31	W29					27,713	21,104
		0	0	W23	SLUICE W23	b	0.23	25,189		W23	W31	3,772	W23	W31					27,713	21,104
		0	0	W23		i		1,000		FLUSH	W31								27,713	21,104
		0	0	W23	SLUICE W23	b	0.14	18,799		W23	W26	3,060	W23	W26					27,713	21,104
		0	0	W23		i		1,000		FLUSH	W26								27,713	21,104
10/98	400	0	0	C2	TRANS TO CIT			22,000		W30	CIT	2	W30	CIT					27,713	21,104
		0	0	C2	TRANS FOR SETTLING			22,700		W28	W30	447	W28	W30					27,713	21,104
		0	0	C2				7,700		W28	W29	425	W28	W29					27,713	21,104
		0	0	C2				7,000		W24	W29	427	W24	W29					20,713	21,104
		0	1,107	C2	GAAT SUPERNATE TO B	i	0.40	133,920		GAAT	BV								20,713	21,104
11/98	400	0	0	C2	SLUICE W22	b		12,809		W22	W28	6,800	W22	W28					20,713	21,104
		0	0	C2		i		1,000		FLUSH	W28								20,713	21,104
		0	0	C2	TRANS TO CIT			24,000		W30	CIT	4	W30	CIT					20,713	21,104
		0	0	C2				24,000		W29	CIT	12	W29	CIT					20,713	21,104
		0	0	C2	TRANS FOR SETTLING			24,000		W31	W30	547	W31	W30					20,713	21,104
12/98	2,400	0	0	C2															20,713	21,104
		0	0	C2															20,713	21,104
		0	0	C2	TRANS FOR SETTLING			19,100		W25	W29	337	W25	W29					20,713	2,004
		0	0	C2															20,713	2,004
		0	1,924	C2	TRANS TO BV EVAP			13,800		W28	BV								20,713	2,004
		0	11,525	C2				18,700		W24	BV								2,013	2,004
		0	0	C2															2,013	2,004
		0	0	C2															2,013	2,004
1/99	400	0	0	C2															2,013	2,004
		0	0	C1															2,013	2,004
		0	0	C1															2,013	2,004
		0	1,661	C1	GAAT SUPERNATE TO B	i	0.60	200,880		GAAT	BV								2,013	2,004
		0	0	C1	TRANS TO CIT			18,000		W29	CIT	14	W29	CIT					2,013	2,004
		0	0	C1				24,000		W30	CIT	7	W30	CIT					2,013	2,004
2/99	400	0	6,271	C1	TRANS TO BV EVAP			11,000		W27	BV								2,013	2,004
		0	0	C1	TRANS FOR SETTLING			22,000		W26	W30	338	W26	W30					2,013	2,004
		0	0	C1				2,800		W31	W29	520	W31	W29					2,013	2,004
		0	0	C1				3,100		W26	W29	321	W26	W29					2,013	2,004
3/99	2,400	0	0	C1															2,013	2,004
		0	0	C1															2,013	2,004
		0	0	C1															2,013	2,004
		0	0	C1															2,013	2,004
		0	0	C1															2,013	2,004
4/99	400	0	0	C1															2,013	2,004
		0	0	C1	TRANS TO CIT			3,700		W29	CIT	18	W29	CIT					2,013	2,004
		0	0	C1				22,500		W30	CIT	9	W30	CIT					2,013	2,004

GAAT SLUDGE CONSOLIDATION IN W9 (except W8). SETTLING ONLY.

DATE	SLURRIES = 5 wt% SOLIDS Newly Gen. Conc	PWTP Conc to W21	Other LLLW Conc.	New gen to tank	Project	M tr	tank split	Conc volume trans	PW sluice volume trans	FROM	TO	Sludge volume trans	FROM	TO	CsR (Cesium removal) OTE (out-of-tank evap) Volume out of W-29	Volume Into W-30	Cesium DF	Nitrate in Evap	Supern W-24	Supern W-26
		0	0	C2	SLUICE C1	b		16,168		C1	W31	1,407	C1	W31					2,013	2,004
		0	0	C2		i		1,000		FLUSH	W31								2,013	2,004
5/99	400	0	0	CIT	SLUICE C2	b	0.30	8,117		C2	W31	580	C2	W31					2,013	2,004
		0	0	CIT		i		1,000		FLUSH	W31								2,013	2,004
		0	0	CIT	SLUICE C2	b	0.70	18,939		C2	W28	1,352	C2	W28					2,013	2,004
		0	0	CIT		i		1,000		FLUSH	W28								2,013	2,004
6/99	2,400	0	0	CIT															2,013	2,004
		0	0	CIT															2,013	2,004
		0	0	CIT															2,013	2,004
		0	0	CIT															2,013	2,004
		0	0	CIT															2,013	2,004
7/99	400	0	0	CIT	TRANS FOR SETTLING			20,000		W31	W29	593	W31	W29					2,013	2,004
		0	0	CIT				3,800		W31	W30	564	W31	W30					2,013	2,004
		0	0	CIT				18,500		W28	W30	811	W28	W30					2,013	2,004
		0	0	CIT															2,013	2,004
		0	0	CIT															2,013	2,004
		0	0	CIT															2,013	2,004
8/99	400	0	0	CIT	TRANS TO CIT			23,500		W29	CIT	21	W29	CIT					2,013	2,004
		0	0	CIT				23,500		W30	CIT	15	W30	CIT					2,013	2,004
		0	0	CIT															2,013	2,004
		0	0	CIT	TRANS FOR SETTLING			2,500		W31	W30	535	W31	W30					2,013	2,004
		0	0	CIT				1,400		W28	W30	771	W28	W30					2,013	2,004
9/99	2,400	0	0	CIT	SLUICE W8 TO BV	i		34,070		W8	W23	10,400	W8	W23					2,013	2,004
		0	0	CIT															2,013	2,004
		0	0	CIT															2,013	2,004
		0	0	CIT															2,013	2,004
		0	0	CIT															2,013	2,004
		0	0	CIT															2,013	2,004
10/99	400	0	0	CIT															2,013	2,004
		0	0	CIT	TRANS TO MVST	b	0.50	17,035		W23	W31	5,200	W23	W31					2,013	2,004
		0	0	CIT		i				FLUSH	W31								2,013	2,004
		0	0	CIT		b	0.50	17,035		W23	W26	5,200	W23	W26					2,013	2,004
		0	0	CIT		i				FLUSH	W26								2,013	2,004
11/99	400	0	0	CIT															2,013	2,004
		0	0	CIT															2,013	2,004
12/99	2,400	0	1,564	CIT	TRANS TO BV EVAP			17,000		W31	BV								2,013	2,004
		0	1,499	CIT				17,000		W26	BV								2,013	2,004
		0	0	CIT															2,013	2,004
		0	0	CIT															2,013	2,004
		0	0	CIT															2,013	2,004
1/00	400	0	0	CIT															2,013	2,004
		0	0	CIT															2,013	2,004
2/00	400	0	0	CIT	SLUICE W9 TO BV	i	0.15	40,267		GAAT-8	W21	5,648	GAAT-8	W21					2,013	2,004
		0	0	CIT		i	0.15	40,267		GAAT-8	W23	5,648	GAAT-8	W23					2,013	2,004
		0	0	CIT	TRANS TO MVST	b	0.50	20,134		W21	W24	2,824	W21	W24					22,147	2,004
		0	0	CIT		i		1,000		FLUSH	W24								23,147	2,004
		0	0	CIT		b	0.50	20,134		W21	W27	2,824	W21	W27					23,147	2,004
		0	0	CIT		i		1,000		FLUSH	W27								23,147	2,004
3/00	2,400	0	0	CIT	SLUICE W9 TO BV	i	0.15	40,267		GAAT-8	W21								23,147	2,004
		0	0	CIT	TRANS TO MVST	i	0.50	20,134		W23	W31	2,824	W23	W31					23,147	2,004
		0	0	CIT		i		1,000		FLUSH	W31								23,147	2,004
		0	0	CIT		i	0.50	20,134		W23	W28	2,824	W23	W28					23,147	2,004
		0	0	CIT		i		1,000		FLUSH	W28								23,147	2,004
		0	999	CIT				20,500		W27	BV								23,147	2,004
		0	1,100	CIT				20,500		W24	BV								2,647	2,004
4/00	400	0	0	CIT	SLUICE W9 TO BV	i	0.15	40,267		GAAT-8	W23	5,648	GAAT-8	W23					2,647	2,004
		0	14,433	CIT				20,500		W31	BV								2,647	2,004
		0	0	CIT	TRANS TO MVST	b	0.50	20,134		W21	W24	0	W21	W24					22,781	2,004

GAAT SLUDGE CONSOLIDATION IN W9 (except W8). SETTLING ONLY.

DATE	SLURRIES = 5 wt% SOLIDS Newly Gen. Conc	PWTP Conc to W21	Other LLLW Conc.	New gen to tank	Project	M tr	tank split	Conc volume trans	PW sluice volume trans	FROM	TO	Sludge volume trans	FROM	TO	CsR (Cesium removal) OTE (out-of-tank evap) Volume out of W-29	Volume into W-30	Cesium DF	Nitrate in Evap	Supern W-24	Supern W-25
		0	0	CIT		i		1,000		FLUSH	W24								23,781	2,004
		0	0	CIT		b	0.50	20,134		W21	W26	0	W21	W26					23,781	2,004
		0	0	CIT		i		1,000		FLUSH	W26								23,781	2,004
5/00	400	0	0	CIT	SLUICE W9 TO BV	i	0.15	40,267		GAAT-8	W21	5,648	GAAT-8	W21					23,781	2,004
		0	0	CIT	TRANS TO MVST	b	0.40	16,107		W23	W31	2,259	W23	W31					23,781	2,004
		0	0	CIT		i		1,000		FLUSH	W31								23,781	2,004
		0	0	CIT		b	0.80	19,328		W23	W27	2,711	W23	W27					23,781	2,004
		0	0	CIT		i		1,000		FLUSH	W27								23,781	2,004
		0	1,553	CIT	TRANS TO BV EVAP			16,500		W31	BV								23,781	2,004
		0	15,623	CIT				20,500		W28	BV								23,781	2,004
6/00	2,400	0	0	CIT	SLUICE W9	i	0.15	40,267		GAAT-8	W23	7,208	GAAT-8	W23					23,781	2,004
		0	0	CIT	TRANS TO MVST	b	0.50	20,134		W21	W28	2,824	W21	W28					23,781	2,004
		0	0	CIT		i		1,000		FLUSH	W28								23,781	2,004
		0	0	CIT		b	0.60	12,080		W21	W31	1,694	W21	W31					23,781	2,004
		0	0	CIT		i		1,000		FLUSH	W31								23,781	2,004
		0	123	CIT	TRANS TO BV EVAP			20,500		W24	BV								3,281	2,004
		0	117	CIT				21,000		W27	BV								3,281	2,004
		0	167	CIT				21,200		W26	BV								3,281	2,004
7/00	400	0	0	CIT	TRANS TO MVST	b	0.40	18,040		W23	W24	3,154	W23	W24					21,321	2,004
		0	0	CIT		i		1,000		FLUSH	W24								22,321	2,004
		0	0	CIT		b	0.60	16,236		W23	W26	2,839	W23	W26					22,321	2,004
		0	0	CIT		i		1,000		FLUSH	W26								22,321	2,004
		0	0	CIT		b		10,824		W23	W27	1,892	W23	W27					22,321	2,004
		0	0	CIT		i		1,000		FLUSH	W27								22,321	2,004
		0	0	CIT		i	0.10	26,845		GAAT-8	W21	3,765	GAAT-8	W21					22,321	2,004
		0	0	CIT		b	0.40	13,959		W21	W25	1,958	W21	W25					22,321	15,964
		0	0	CIT		i		1,000		FLUSH	W25								22,321	16,964
		0	268	CIT	TRANS TO BV EVAP			14,300		W31	BV								22,321	16,964
		0	1,837	CIT				21,800		W28	BV								22,321	16,964
8/00	400	0	18	CIT				20,400		W24	BV								1,921	16,964
		0	1,789	CIT				15,000		W25	BV								1,921	1,964
		0	15	CIT				17,300		W26	BV								1,921	1,964
		0	0	CIT		b	0.70	14,857		W21	W28	2,056	W21	W28					1,921	1,964
		0	0	CIT		i		1,000		FLUSH	W28								1,921	1,964
		0	0	CIT		b		6,282		W21	W24	881	W21	W24					8,203	1,964
		0	0	CIT		i		1,000		FLUSH	W24								9,203	1,964
9/00	2,400	0	0	CIT															9,203	1,964
		0	0	CIT															9,203	1,964
		0	0	CIT															9,203	1,964
		0	0	CIT															9,203	1,964
		0	10	CIT				11,800		W27	BV								9,203	1,964
		0	147	CIT				15,800		W28	BV								9,203	1,964
		0	2	CIT				7,200		W24	BV								2,003	1,964
10/00	400	0	0	CIT															2,003	1,964
		0	0	CIT															2,003	1,964
		0	0	CIT															2,003	1,964
		0	0	CIT															2,003	1,964
		0	0	CIT															2,003	1,964
		0	0	CIT															2,003	1,964
11/00	400	0	0	CIT															2,003	1,964
		0	0	CIT															2,003	1,964
		0	0	CIT															2,003	1,964
		0	0	CIT															2,003	1,964
12/00	2,400	0	0	CIT															2,003	1,964

	te volume in the MVSTs (gallons):						0 1 2 3 4 5 6 7 Nitrates in MVST supernates (M)								Cesium in MVSTs (Bq/ml)					
DATE	W-26	W-27	W-28	W-29	W-30	W-31	W-24	W-25	W-26	W-27	W-28	W-29	W-30	W-31	W-24	W-25	W-26	W-27	W-28	W-29
1/96	29,200	26,900	41,800	33,600	10,900	37,700	3.18	3.85	4.82	5.52	6.85	3.33	5.85	5.02	1.10E+06	1.20E+06	1.40E+06	3.30E+05	6.20E+05	5.00E+05
2/96	29,200	26,900	41,800	33,600	10,900	37,700	3.18	3.85	4.82	5.52	6.85	3.33	5.85	5.02	1.10E+06	1.20E+06	1.40E+06	3.30E+05	6.20E+05	5.00E+05
3/96	29,200	26,900	41,800	33,600	10,900	37,700	3.18	3.85	4.82	5.52	6.85	3.33	5.85	5.02	1.10E+06	1.20E+06	1.40E+06	3.30E+05	6.20E+05	5.00E+05
4/96	29,200	26,900	41,800	11,100	28,400	37,700	3.18	3.85	4.82	5.52	6.85	3.33	4.88	5.02	1.10E+06	1.20E+06	1.40E+06	3.30E+05	6.20E+05	5.00E+05
5/96	29,200	26,900	41,800	11,100	28,400	37,700	3.18	3.85	4.82	5.52	6.85	3.33	4.88	5.02	1.10E+06	1.20E+06	1.40E+06	3.30E+05	6.20E+05	5.00E+05
6/96	29,200	26,900	41,800	11,100	28,400	37,700	3.18	3.85	4.82	5.52	6.85	3.33	4.88	5.02	1.10E+06	1.20E+06	1.40E+06	3.30E+05	6.20E+05	5.00E+05
7/96	29,200	26,900	41,800	11,100	28,400	37,700	3.18	3.85	4.82	5.52	6.85	3.33	4.88	5.02	1.10E+06	1.20E+06	1.40E+06	3.30E+05	6.20E+05	5.00E+05
8/96	24,300	25,300	36,900	11,200	29,600	35,000	3.18	3.85	4.82	5.52	6.85	3.33	4.88	5.02	1.10E+06	1.20E+06	1.40E+06	3.30E+05	6.20E+05	5.00E+05
9/96	24,300	25,300	36,900	11,200	29,600	35,000	3.18	3.85	4.82	5.52	6.85	3.33	4.88	5.02	1.10E+06	1.20E+06	1.40E+06	3.30E+05	6.20E+05	5.00E+05
10/96	24,300	25,300	36,900	11,200	29,600	35,000	3.18	3.85	4.82	5.52	6.85	3.33	4.88	5.02	1.10E+06	1.20E+06	1.40E+06	3.30E+05	6.20E+05	5.00E+05
11/96	24,300	1,300	36,900	35,200	29,600	35,000	3.18	3.85	4.82	5.52	6.85	4.82	4.88	5.02	1.10E+06	1.20E+06	1.40E+06	3.30E+05	6.20E+05	3.84E+05
12/96	24,300	18,300	36,900	35,200	12,600	35,000	3.18	3.85	4.82	4.93	6.85	4.82	4.88	5.02	1.10E+06	1.20E+06	1.40E+06	5.41E+05	6.20E+05	3.84E+05
1/97	24,300	18,300	36,900	12,200	35,600	35,000	3.18	3.85	4.82	4.93	6.85	4.82	4.84	5.02	1.10E+06	1.20E+06	1.40E+06	5.41E+05	6.20E+05	3.84E+05
2/97	24,300	18,300	36,900	12,200	35,600	35,000	3.18	3.85	4.82	4.93	6.85	4.82	4.84	5.02	1.10E+06	1.20E+06	1.40E+06	5.41E+05	6.20E+05	3.84E+05
3/97	24,300	18,300	36,900	12,200	35,600	35,000	3.18	3.85	4.82	4.93	6.85	4.82	4.84	5.02	1.10E+06	1.20E+06	1.40E+06	5.41E+05	6.20E+05	3.84E+05
4/97	24,300	18,300	36,900	12,200	35,600	35,000	3.18	3.85	4.82	4.93	6.85	4.82	4.84	5.02	1.10E+06	1.20E+06	1.40E+06	5.41E+05	6.20E+05	3.84E+05
5/97	24,300	18,300	36,900	12,200	35,600	35,000	3.18	3.85	4.82	4.93	6.85	4.82	4.84	5.02	1.10E+06	1.20E+06	1.40E+06	5.41E+05	6.20E+05	3.84E+05
6/97	24,300	18,300	36,900	12,200	35,600	35,000	3.18	3.85	4.82	4.93	6.85	4.82	4.84	5.02	1.10E+06	1.20E+06	1.40E+06	5.41E+05	6.20E+05	3.84E+05
7/97	24,300	18,300	36,900	12,200	35,600	35,000	3.18	3.85	4.82	4.93	6.85	4.82	4.84	5.02	1.10E+06	1.20E+06	1.40E+06	5.41E+05	6.20E+05	3.84E+05
	24,300	18,300	22,900	12,200	35,600	35,000	3.18	3.85	4.82	4.93	6.85	4.82	4.84	5.02	1.10E+06	1.20E+06	1.40E+06	5.41E+05	6.20E+05	3.84E+05
	24,300	18,300	1,900	12,200	35,600	35,000	3.18	3.85	4.82	4.93	6.85	4.82	4.84	5.02	1.10E+06	1.20E+06	1.40E+06	5.41E+05	6.20E+05	3.84E+05
8/97	24,300	18,300	1,900	19,200	35,600	35,000	3.18	3.85	4.82	4.93	6.85	4.22	4.84	5.02	1.10E+06	1.20E+06	1.40E+06	5.41E+05	6.20E+05	6.45E+05
	24,300	18,300	1,900	35,700	35,600	35,000	3.18	3.85	4.82	4.93	6.85	4.05	4.84	5.02	1.10E+06	1.20E+06	1.40E+06	5.41E+05	6.20E+05	9.02E+05
	24,300	18,300	1,900	35,700	11,600	35,000	4.62	3.85	4.82	4.93	6.85	4.05	4.84	5.02	3.20E+05	1.20E+06	1.40E+06	5.41E+05	6.20E+05	9.02E+05
9/97	24,300	18,300	35,225	35,700	11,600	35,000	4.62	3.85	4.82	4.93	4.75	4.05	4.84	5.02	3.20E+05	1.20E+06	1.40E+06	5.41E+05	4.49E+05	9.02E+05
	24,300	18,300	36,225	35,700	11,600	35,000	4.62	3.85	4.82	4.93	4.62	4.05	4.84	5.02	3.20E+05	1.20E+06	1.40E+06	5.41E+05	4.36E+05	9.02E+05
	24,300	18,300	36,225	35,700	11,600	35,000	4.62	3.85	4.82	4.93	4.62	4.05	4.84	5.02	3.20E+05	1.20E+06	1.40E+06	5.41E+05	4.36E+05	9.02E+05
	29,330	18,300	36,225	35,700	11,600	35,000	4.62	3.85	5.03	4.93	4.62	4.05	4.84	5.02	3.20E+05	1.20E+06	1.34E+06	5.41E+05	4.36E+05	9.02E+05
	30,330	18,300	36,225	35,700	11,600	35,000	4.62	3.85	4.87	4.93	4.62	4.05	4.84	5.02	3.20E+05	1.20E+06	1.30E+06	5.41E+05	4.36E+05	9.02E+05
	30,330	26,474	36,225	35,700	11,600	35,000	4.62	3.85	4.87	5.28	4.62	4.05	4.84	5.02	3.20E+05	1.20E+06	1.30E+06	7.06E+05	4.36E+05	9.02E+05
	30,330	27,474	36,225	35,700	11,600	35,000	4.62	3.85	4.87	5.08	4.62	4.05	4.84	5.02	3.20E+05	1.20E+06	1.30E+06	6.80E+05	4.36E+05	9.02E+05
	30,330	27,474	36,225	35,700	11,600	35,000	4.62	5.30	4.87	5.08	4.62	4.05	4.84	5.02	3.20E+05	1.12E+06	1.30E+06	6.80E+05	4.36E+05	9.02E+05
	30,330	27,474	36,225	35,700	11,600	35,000	4.62	5.05	4.87	5.08	4.62	4.05	4.84	5.02	3.20E+05	1.06E+06	1.30E+06	6.80E+05	4.36E+05	9.02E+05
	30,330	27,474	36,225	35,700	11,600	37,619	4.62	5.05	4.87	5.08	4.62	4.05	4.84	5.10	3.20E+05	1.06E+06	1.30E+06	6.80E+05	4.36E+05	9.02E+05
	30,330	27,474	36,225	35,700	11,600	38,819	4.62	5.05	4.87	5.08	4.62	4.05	4.84	4.97	3.20E+05	1.06E+06	1.30E+06	6.80E+05	4.36E+05	9.02E+05
10/97	30,330	27,474	36,225	11,700	19,300	38,819	4.62	5.05	4.87	5.08	4.62	4.05	7.95	4.97	3.20E+05	1.06E+06	1.30E+06	6.80E+05	4.36E+05	9.02E+05
11/97	30,330	27,474	36,225	35,000	19,300	38,819	4.62	5.05	4.87	5.08	4.62	4.43	7.95	4.97	3.20E+05	1.06E+06	1.30E+06	6.80E+05	4.36E+05	5.14E+05
12/97	30,330	27,474	36,225	11,000	32,800	38,819	4.62	5.05	4.87	5.08	4.62	4.43	7.92	4.97	3.20E+05	1.06E+06	1.30E+06	6.80E+05	4.36E+05	5.14E+05
1/98	30,330	27,474	36,225	11,000	11,800	38,819	4.62	5.05	4.87	5.08	4.62	4.43	7.92	4.97	3.20E+05	1.06E+06	1.30E+06	6.80E+05	4.36E+05	5.14E+05
	30,330	27,474	36,225	35,000	11,800	14,819	4.62	5.05	4.87	5.08	4.62	4.80	7.92	4.97	3.20E+05	1.06E+06	1.30E+06	6.80E+05	4.36E+05	4.58E+05
	30,330	27,474	36,225	35,000	11,800	22,719	4.62	5.05	4.87	5.08	4.62	4.80	7.92	3.24	3.20E+05	1.06E+06	1.30E+06	6.80E+05	4.36E+05	4.58E+05
	30,330	27,474	36,225	35,000	11,800	23,719	4.62	5.05	4.87	5.08	4.62	4.80	7.92	3.10	3.20E+05	1.06E+06	1.30E+06	6.80E+05	4.36E+05	4.58E+05
2/98	30,330	27,474	36,225	11,000	26,500	23,719	4.62	5.05	4.87	5.08	4.62	4.80	7.87	3.10	3.20E+05	1.06E+06	1.30E+06	6.80E+05	4.36E+05	4.58E+05
3/98	30,330	27,474	36,225	11,000	26,500	33,219	4.62	5.05	4.87	5.08	4.62	4.80	7.87	2.22	3.20E+05	1.06E+06	1.30E+06	6.80E+05	4.36E+05	4.58E+05
	30,330	27,474	36,225	11,000	26,500	34,219	4.62	5.05	4.87	5.08	4.62	4.80	7.87	2.15	3.20E+05	1.06E+06	1.30E+06	6.80E+05	4.36E+05	4.58E+05
	30,330	27,474	36,225	11,000	26,500	34,219	4.62	5.05	4.87	5.08	4.62	4.80	7.87	2.15	3.20E+05	1.06E+06	1.30E+06	6.80E+05	4.36E+05	4.58E+05
	30,330	27,474	36,225	11,000	26,500	34,219	4.62	5.05	4.87	5.08	4.62	4.80	7.87	2.15	3.20E+05	1.06E+06	1.30E+06	6.80E+05	4.36E+05	4.58E+05
	30,330	27,474	36,225	11,000	26,500	34,219	4.62	5.05	4.87	5.08	4.62	4.80	7.87	2.15	3.20E+05	1.06E+06	1.30E+06	6.80E+05	4.36E+05	4.58E+05
4/98	30,330	27,474	36,225	11,000	26,500	34,219	1.12	5.05	4.87	5.08	4.62	4.80	7.87	2.15	1.00E+05	1.06E+06	1.30E+06	6.80E+05	4.36E+05	4.58E+05
	30,330	27,474	36,225	11,000	26,500	34,219	1.06	5.05	4.87	5.08	4.62	4.80	7.87	2.15	9.52E+04	1.06E+06	1.30E+06	6.80E+05	4.36E+05	4.58E+05
	30,330	27,474	36,225	11,000	21,500	34,219	2.48	5.05	4.87	5.08	4.62	4.80	7.87	2.15	2.64E+05	1.06E+06	1.30E+06	6.80E+05	4.36E+05	4.58E+05
	30,330	27,474	36,225	11,000	21,500	34,219	2.39	5.05	4.87	5.08	4.62	4.80	7.87	2.15	2.55E+05	1.06E+06	1.30E+06	6.80E+05	4.36E+05	4.58E+05
	30,330	27,474	36,225	11,000	21,500	34,219	2.30	5.05	4.87	5.08	4.62	4.80	7.87	2.15	2.46E+05	1.06E+06	1.30E+06	6.80E+05	4.36E+05	4.58E+05
	30,330	7,274	36,225	31,200	21,500	34,219	2.30	5.05	4.87	5.08	4.62	4.98	7.87	2.15	2.46E+05	1.06E+06	1.30E+06	6.80E+05	4.36E+05	6.02E+05
5/98	30,330	11,974	36,225	31,200	21,500	34,219	2.30	5.05	4.87	3.09	4.62	4.98	7.87	2.15	2.46E+05	1.06E+06	1.30E+06	4.24E+05	4.36E+05	6.02E+05
	30,330	12,974	36,225	31,200	21,500	34,219	2.30	5.05	4.87	2.85	4.62	4.98	7.87	2.15	2.46E+05	1.06E+06	1.30E+06	3.92E+05	4.36E+05	6.02E+05
6/98	30,330	12,974	36,225	11,000	34,500	34,219	2.30	5.05	4.87	2.85	4.62	4.98	7.82	2.15	2.46E+05	1.06E+06	1.30E+06	3.92E+05	4.36E+05	6.02E+05
	30,330	12,974	36,225	11,000	34,500	5,219	2.30	5.05	4.87	2.85	4.62	4.98	7.82	2.15	2.46E+05	1.06E+06	1.30E+06	3.92E+05	4.36E+05	6.02E+05

DATE	te volume in the MVSTs (gallons):						0 1 2 3 4 5 6 7 Nitrates in MVST supernates (M)								Cesium in MVSTs (Bq/ml)					
	W-26	W-27	W-28	W-29	W-30	W-31	W-24	W-25	W-26	W-27	W-28	W-29	W-30	W-31	W-24	W-25	W-26	W-27	W-28	W-29
	30,330	12,974	12,725	34,500	34,500	5,219	2.30	5.05	4.87	2.85	4.62	4.74	7.82	2.15	2.46E+05	1.06E+06	1.30E+06	3.92E+05	4.36E+05	4.89E+05
7/98	30,330	12,974	12,725	34,500	34,500	5,219	2.30	5.05	4.87	2.85	4.62	4.74	7.82	2.15	2.46E+05	1.06E+06	1.30E+06	3.92E+05	4.36E+05	4.89E+05
	30,330	12,974	12,725	34,500	8,500	5,219	2.30	5.05	4.87	2.85	4.62	4.74	7.82	2.15	2.46E+05	1.06E+06	1.30E+06	3.92E+05	4.36E+05	4.89E+05
	30,330	12,974	12,725	34,500	8,500	27,123	2.30	5.05	4.87	2.85	4.62	4.74	7.82	6.30	2.46E+05	1.06E+06	1.30E+06	3.92E+05	4.36E+05	4.89E+05
	30,330	12,974	12,725	34,500	8,500	27,123	1.97	5.05	4.87	2.85	4.62	4.74	7.82	6.30	2.10E+05	1.06E+06	1.30E+06	3.92E+05	4.36E+05	4.89E+05
8/98	30,330	12,974	12,725	34,500	8,500	27,123	1.97	5.05	4.87	2.85	4.62	4.74	7.82	6.30	2.10E+05	1.06E+06	1.30E+06	3.92E+05	4.36E+05	4.89E+05
	30,330	12,974	12,725	34,500	8,500	32,599	1.97	5.05	4.87	2.85	4.62	4.74	7.82	6.15	2.10E+05	1.06E+06	1.30E+06	3.92E+05	4.36E+05	4.89E+05
	30,330	12,974	12,725	34,500	8,500	33,599	1.97	5.05	4.87	2.85	4.62	4.74	7.82	5.97	2.10E+05	1.06E+06	1.30E+06	3.92E+05	4.36E+05	4.89E+05
	30,330	12,974	12,725	34,500	8,500	33,599	1.97	5.05	4.87	2.85	4.62	4.74	7.82	5.97	2.10E+05	1.06E+06	1.30E+06	3.92E+05	4.36E+05	4.89E+05
	30,330	12,974	31,344	34,500	8,500	33,599	1.97	5.05	4.87	2.85	4.47	4.74	7.82	5.97	2.10E+05	1.06E+06	1.30E+06	3.92E+05	8.74E+05	4.89E+05
	30,330	12,974	32,344	34,500	8,500	33,599	1.97	5.05	4.87	2.85	4.33	4.74	7.82	5.97	2.10E+05	1.06E+06	1.30E+06	3.92E+05	8.47E+05	4.89E+05
	30,330	12,974	32,344	34,500	8,500	33,599	1.97	5.05	4.87	2.85	4.33	4.74	7.82	5.97	2.10E+05	1.06E+06	1.30E+06	3.92E+05	8.47E+05	4.89E+05
	30,330	12,974	32,344	34,500	8,500	33,599	3.20	5.05	4.87	2.85	4.33	4.74	7.82	5.97	9.38E+05	1.06E+06	1.30E+06	3.92E+05	8.47E+05	4.89E+05
	30,330	12,974	32,344	34,500	8,500	33,599	3.08	5.05	4.87	2.85	4.33	4.74	7.82	5.97	9.04E+05	1.06E+06	1.30E+06	3.92E+05	8.47E+05	4.89E+05
	7,330	12,974	32,344	34,500	8,500	33,599	3.08	5.05	4.87	2.85	4.33	4.74	7.82	5.97	9.04E+05	1.06E+06	1.30E+06	3.92E+05	8.47E+05	4.89E+05
9/98	7,330	12,974	32,344	11,000	8,500	33,599	3.08	5.05	4.87	2.85	4.33	4.74	7.82	5.97	9.04E+05	1.06E+06	1.30E+06	3.92E+05	8.47E+05	4.89E+05
	7,330	12,974	32,344	11,000	33,500	8,599	3.08	5.05	4.87	2.85	4.33	4.74	6.44	5.97	9.04E+05	1.06E+06	1.30E+06	3.92E+05	8.47E+05	4.89E+05
	7,330	12,974	32,344	17,000	33,500	2,599	3.08	5.05	4.87	2.85	4.33	5.17	6.44	5.97	9.04E+05	1.06E+06	1.30E+06	3.92E+05	8.47E+05	6.59E+05
	7,330	12,974	32,344	17,000	33,500	27,788	3.08	5.05	4.87	2.85	4.33	5.17	6.44	4.26	9.04E+05	1.06E+06	1.30E+06	3.92E+05	8.47E+05	6.59E+05
	7,330	12,974	32,344	17,000	33,500	28,788	3.08	5.05	4.87	2.85	4.33	5.17	6.44	4.11	9.04E+05	1.06E+06	1.30E+06	3.92E+05	8.47E+05	6.59E+05
	26,129	12,974	32,344	17,000	33,500	28,788	3.08	5.05	4.30	2.85	4.33	5.17	6.44	4.11	9.04E+05	1.06E+06	3.65E+05	3.92E+05	8.47E+05	6.59E+05
	27,129	12,974	32,344	17,000	33,500	28,788	3.08	5.05	4.14	2.85	4.33	5.17	6.44	4.11	9.04E+05	1.06E+06	3.51E+05	3.92E+05	8.47E+05	6.59E+05
10/98	27,129	12,974	32,344	17,000	11,500	28,788	3.08	5.05	4.14	2.85	4.33	5.17	6.44	4.11	9.04E+05	1.06E+06	3.51E+05	3.92E+05	8.47E+05	6.59E+05
	27,129	12,974	9,644	17,000	34,200	28,788	3.08	5.05	4.14	2.85	4.33	5.17	5.04	4.11	9.04E+05	1.06E+06	3.51E+05	3.92E+05	8.47E+05	6.59E+05
	27,129	12,974	1,944	24,700	34,200	28,788	3.08	5.05	4.14	2.85	4.33	4.91	5.04	4.11	9.04E+05	1.06E+06	3.51E+05	3.92E+05	8.47E+05	7.18E+05
	27,129	12,974	1,944	31,700	34,200	28,788	3.08	5.05	4.14	2.85	4.33	4.51	5.04	4.11	9.04E+05	1.06E+06	3.51E+05	3.92E+05	8.47E+05	7.59E+05
	27,129	12,974	1,944	31,700	34,200	28,788	3.08	5.05	4.14	2.85	4.33	4.51	5.04	4.11	9.04E+05	1.06E+06	3.51E+05	3.92E+05	8.47E+05	7.59E+05
11/98	27,129	12,974	14,753	31,700	34,200	28,788	3.08	5.05	4.14	2.85	0.74	4.51	5.04	4.11	9.04E+05	1.06E+06	3.51E+05	3.92E+05	1.12E+05	7.59E+05
	27,129	12,974	15,753	31,700	34,200	28,788	3.08	5.05	4.14	2.85	0.70	4.51	5.04	4.11	9.04E+05	1.06E+06	3.51E+05	3.92E+05	1.04E+05	7.59E+05
	27,129	12,974	15,753	31,700	10,200	28,788	3.08	5.05	4.14	2.85	0.70	4.51	5.04	4.11	9.04E+05	1.06E+06	3.51E+05	3.92E+05	1.04E+05	7.59E+05
	27,129	12,974	15,753	7,700	10,200	28,788	3.08	5.05	4.14	2.85	0.70	4.51	5.04	4.11	9.04E+05	1.06E+06	3.51E+05	3.92E+05	1.04E+05	7.59E+05
	27,129	12,974	15,753	7,700	34,200	4,788	3.08	5.05	4.14	2.85	0.70	4.51	4.39	4.11	9.04E+05	1.06E+06	3.51E+05	3.92E+05	1.04E+05	7.59E+05
12/98	27,129	12,974	15,753	7,700	34,200	4,788	3.08	5.05	4.14	2.85	0.70	4.51	4.39	4.11	9.04E+05	1.06E+06	3.51E+05	3.92E+05	1.04E+05	7.59E+05
	27,129	12,974	15,753	7,700	34,200	4,788	3.08	5.05	4.14	2.85	0.70	4.51	4.39	4.11	9.04E+05	1.06E+06	3.51E+05	3.92E+05	1.04E+05	7.59E+05
	27,129	12,974	15,753	26,800	34,200	4,788	3.08	5.05	4.14	2.85	0.70	4.89	4.39	4.11	9.04E+05	1.06E+06	3.51E+05	3.92E+05	1.04E+05	9.76E+05
	27,129	12,974	15,753	26,800	34,200	4,788	3.08	5.05	4.14	2.85	0.70	4.89	4.39	4.11	9.04E+05	1.06E+06	3.51E+05	3.92E+05	1.04E+05	9.76E+05
	27,129	12,974	1,953	26,800	34,200	4,788	3.08	5.05	4.14	2.85	0.70	4.89	4.39	4.11	9.04E+05	1.06E+06	3.51E+05	3.92E+05	1.04E+05	9.76E+05
	27,129	12,974	1,953	26,800	34,200	4,788	3.08	5.05	4.14	2.85	0.70	4.89	4.39	4.11	9.04E+05	1.06E+06	3.51E+05	3.92E+05	1.04E+05	9.76E+05
	27,129	12,974	1,953	26,800	34,200	4,788	3.08	5.05	4.14	2.85	0.70	4.89	4.39	4.11	9.04E+05	1.06E+06	3.51E+05	3.92E+05	1.04E+05	9.76E+05
	27,129	12,974	1,953	26,800	34,200	4,788	3.08	5.05	4.14	2.85	0.70	4.89	4.39	4.11	9.04E+05	1.06E+06	3.51E+05	3.92E+05	1.04E+05	9.76E+05
1/99	27,129	12,974	1,953	26,800	34,200	4,788	3.08	5.05	4.14	2.85	0.70	4.89	4.39	4.11	9.04E+05	1.06E+06	3.51E+05	3.92E+05	1.04E+05	9.76E+05
	27,129	12,974	1,953	26,800	34,200	4,788	3.08	5.05	4.14	2.85	0.70	4.89	4.39	4.11	9.04E+05	1.06E+06	3.51E+05	3.92E+05	1.04E+05	9.76E+05
	27,129	12,974	1,953	26,800	34,200	4,788	3.08	5.05	4.14	2.85	0.70	4.89	4.39	4.11	9.04E+05	1.06E+06	3.51E+05	3.92E+05	1.04E+05	9.76E+05
	27,129	12,974	1,953	26,800	34,200	4,788	3.08	5.05	4.14	2.85	0.70	4.89	4.39	4.11	9.04E+05	1.06E+06	3.51E+05	3.92E+05	1.04E+05	9.76E+05
	27,129	12,974	1,953	8,800	34,200	4,788	3.08	5.05	4.14	2.85	0.70	4.89	4.39	4.11	9.04E+05	1.06E+06	3.51E+05	3.92E+05	1.04E+05	9.76E+05
	27,129	12,974	1,953	8,800	10,200	4,788	3.08	5.05	4.14	2.85	0.70	4.89	4.39	4.11	9.04E+05	1.06E+06	3.51E+05	3.92E+05	1.04E+05	9.76E+05
2/99	27,129	1,974	1,953	8,800	10,200	4,788	3.08	5.05	4.14	2.85	0.70	4.89	4.39	4.11	9.04E+05	1.06E+06	3.51E+05	3.92E+05	1.04E+05	9.76E+05
	5,129	1,974	1,953	8,800	32,200	4,788	3.08	5.05	4.14	2.85	0.70	4.89	4.22	4.11	9.04E+05	1.06E+06	3.51E+05	3.92E+05	1.04E+05	9.76E+05
	5,129	1,974	1,953	11,600	32,200	1,988	3.08	5.05	4.14	2.85	0.70	4.70	4.22	4.11	9.04E+05	1.06E+06	3.51E+05	3.92E+05	1.04E+05	1.04E+06
	2,029	1,974	1,953	14,700	32,200	1,988	3.08	5.05	4.14	2.85	0.70	4.58	4.22	4.11	9.04E+05	1.06E+06	3.51E+05	3.92E+05	1.04E+05	8.91E+05
3/99	2,029	1,974	1,953	14,700	32,200	1,988	3.08	5.05	4.14	2.85	0.70	4.58	4.22	4.11	9.04E+05	1.06E+06	3.51E+05	3.92E+05	1.04E+05	8.91E+05
	2,029	1,974	1,953	14,700	32,200	1,988	3.08	5.05	4.14	2.85	0.70	4.58	4.22	4.11	9.04E+05	1.06E+06	3.51E+05	3.92E+05	1.04E+05	8.91E+05
	2,029	1,974	1,953	14,700	32,200	1,988	3.08	5.05	4.14	2.85	0.70	4.58	4.22	4.11	9.04E+05	1.06E+06	3.51E+05	3.92E+05	1.04E+05	8.91E+05
	2,029	1,974	1,953	14,700	32,200	1,988	3.08	5.05	4.14	2.85	0.70	4.58	4.22	4.11	9.04E+05	1.06E+06	3.51E+05	3.92E+05	1.04E+05	8.91E+05
	2,029	1,974	1,953	14,700	32,200	1,988	3.08	5.05	4.14	2.85	0.70	4.58	4.22	4.11	9.04E+05	1.06E+06	3.51E+05	3.92E+05	1.04E+05	8.91E+05
4/99	2,029	1,974	1,953	14,700	32,200	1,988	3.08	5.05	4.14	2.85	0.70	4.58	4.22	4.11	9.04E+05	1.06E+06	3.51E+05	3.92E+05	1.04E+05	8.91E+05
	2,029	1,974	1,953	11,000	32,200	1,988	3.08	5.05	4.14	2.85	0.70	4.58	4.22	4.11	9.04E+05	1.06E+06	3.51E+05	3.92E+05	1.04E+05	8.91E+05
	2,029	1,974	1,953	11,000	9,700	1,988	3.08	5.05	4.14	2.85	0.70	4.58	4.22	4.11	9.04E+05	1.06E+06	3.51E+05	3.92E+05	1.04E+05	8.91E+05

DATE	te volume in the MVSTs (gallons):						0 1 2 3 4 5 6 7 Nitrates in MVST supernates (M)								Cesium in MVSTs (Bq/ml)					
	W-26	W-27	W-28	W-29	W-30	W-31	W-24	W-25	W-26	W-27	W-28	W-29	W-30	W-31	W-24	W-25	W-26	W-27	W-28	W-29
	2,029	1,974	1,953	11,000	9,700	18,154	3.08	5.05	4.14	2.85	0.70	4.58	4.22	4.97	9.04E+05	1.06E+06	3.51E+05	3.92E+05	1.04E+05	8.91E+05
	2,029	1,974	1,953	11,000	9,700	19,154	3.08	5.05	4.14	2.85	0.70	4.58	4.22	4.71	9.04E+05	1.06E+06	3.51E+05	3.92E+05	1.04E+05	8.91E+05
5/99	2,029	1,974	1,953	11,000	9,700	27,271	3.08	5.05	4.14	2.85	0.70	4.58	4.22	4.60	9.04E+05	1.06E+06	3.51E+05	3.92E+05	1.04E+05	8.91E+05
	2,029	1,974	1,953	11,000	9,700	28,271	3.08	5.05	4.14	2.85	0.70	4.58	4.22	4.44	9.04E+05	1.06E+06	3.51E+05	3.92E+05	1.04E+05	8.91E+05
	2,029	1,974	20,892	11,000	9,700	28,271	3.08	5.05	4.14	2.85	3.99	4.58	4.22	4.44	9.04E+05	1.06E+06	3.51E+05	3.92E+05	9.77E+03	8.91E+05
	2,029	1,974	21,892	11,000	9,700	28,271	3.08	5.05	4.14	2.85	3.81	4.58	4.22	4.44	9.04E+05	1.06E+06	3.51E+05	3.92E+05	9.32E+03	8.91E+05
6/99	2,029	1,974	21,892	11,000	9,700	28,271	3.08	5.05	4.14	2.85	3.81	4.58	4.22	4.44	9.04E+05	1.06E+06	3.51E+05	3.92E+05	9.32E+03	8.91E+05
	2,029	1,974	21,892	11,000	9,700	28,271	3.08	5.05	4.14	2.85	3.81	4.58	4.22	4.44	9.04E+05	1.06E+06	3.51E+05	3.92E+05	9.32E+03	8.91E+05
	2,029	1,974	21,892	11,000	9,700	28,271	3.08	5.05	4.14	2.85	3.81	4.58	4.22	4.44	9.04E+05	1.06E+06	3.51E+05	3.92E+05	9.32E+03	8.91E+05
	2,029	1,974	21,892	11,000	9,700	28,271	3.08	5.05	4.14	2.85	3.81	4.58	4.22	4.44	9.04E+05	1.06E+06	3.51E+05	3.92E+05	9.32E+03	8.91E+05
	2,029	1,974	21,892	11,000	9,700	28,271	3.08	5.05	4.14	2.85	3.81	4.58	4.22	4.44	9.04E+05	1.06E+06	3.51E+05	3.92E+05	9.32E+03	8.91E+05
7/99	2,029	1,974	21,892	31,000	9,700	8,271	3.08	5.05	4.14	2.85	3.81	4.49	4.22	4.44	9.04E+05	1.06E+06	3.51E+05	3.92E+05	9.32E+03	6.10E+05
	2,029	1,974	21,892	31,000	13,500	4,471	3.08	5.05	4.14	2.85	3.81	4.49	4.28	4.44	9.04E+05	1.06E+06	3.51E+05	3.92E+05	9.32E+03	6.10E+05
	2,029	1,974	3,392	31,000	32,000	4,471	3.08	5.05	4.14	2.85	3.81	4.49	4.01	4.44	9.04E+05	1.06E+06	3.51E+05	3.92E+05	9.32E+03	6.10E+05
	2,029	1,974	3,392	31,000	32,000	4,471	3.08	5.05	4.14	2.85	3.81	4.49	4.01	4.44	9.04E+05	1.06E+06	3.51E+05	3.92E+05	9.32E+03	6.10E+05
	2,029	1,974	3,392	31,000	32,000	4,471	3.08	5.05	4.14	2.85	3.81	4.49	4.01	4.44	9.04E+05	1.06E+06	3.51E+05	3.92E+05	9.32E+03	6.10E+05
	2,029	1,974	3,392	31,000	32,000	4,471	3.08	5.05	4.14	2.85	3.81	4.49	4.01	4.44	9.04E+05	1.06E+06	3.51E+05	3.92E+05	9.32E+03	6.10E+05
8/99	2,029	1,974	3,392	7,500	32,000	4,471	3.08	5.05	4.14	2.85	3.81	4.49	4.01	4.44	9.04E+05	1.06E+06	3.51E+05	3.92E+05	9.32E+03	6.10E+05
	2,029	1,974	3,392	7,500	8,500	4,471	3.08	5.05	4.14	2.85	3.81	4.49	4.01	4.44	9.04E+05	1.06E+06	3.51E+05	3.92E+05	9.32E+03	6.10E+05
	2,029	1,974	3,392	7,500	8,500	4,471	3.08	5.05	4.14	2.85	3.81	4.49	4.01	4.44	9.04E+05	1.06E+06	3.51E+05	3.92E+05	9.32E+03	6.10E+05
	2,029	1,974	3,392	7,500	11,000	1,971	3.08	5.05	4.14	2.85	3.81	4.49	4.10	4.44	9.04E+05	1.06E+06	3.51E+05	3.92E+05	9.32E+03	6.10E+05
	2,029	1,974	1,992	7,500	12,400	1,971	3.08	5.05	4.14	2.85	3.81	4.49	4.07	4.44	9.04E+05	1.06E+06	3.51E+05	3.92E+05	9.32E+03	6.10E+05
9/99	2,029	1,974	1,992	7,500	12,400	1,971	3.08	5.05	4.14	2.85	3.81	4.49	4.07	4.44	9.04E+05	1.06E+06	3.51E+05	3.92E+05	9.32E+03	6.10E+05
	2,029	1,974	1,992	7,500	12,400	1,971	3.08	5.05	4.14	2.85	3.81	4.49	4.07	4.44	9.04E+05	1.06E+06	3.51E+05	3.92E+05	9.32E+03	6.10E+05
	2,029	1,974	1,992	7,500	12,400	1,971	3.08	5.05	4.14	2.85	3.81	4.49	4.07	4.44	9.04E+05	1.06E+06	3.51E+05	3.92E+05	9.32E+03	6.10E+05
	2,029	1,974	1,992	7,500	12,400	1,971	3.08	5.05	4.14	2.85	3.81	4.49	4.07	4.44	9.04E+05	1.06E+06	3.51E+05	3.92E+05	9.32E+03	6.10E+05
	2,029	1,974	1,992	7,500	12,400	1,971	3.08	5.05	4.14	2.85	3.81	4.49	4.07	4.44	9.04E+05	1.06E+06	3.51E+05	3.92E+05	9.32E+03	6.10E+05
	2,029	1,974	1,992	7,500	12,400	1,971	3.08	5.05	4.14	2.85	3.81	4.49	4.07	4.44	9.04E+05	1.06E+06	3.51E+05	3.92E+05	9.32E+03	6.10E+05
10/99	2,029	1,974	1,992	7,500	12,400	1,971	3.08	5.05	4.14	2.85	3.81	4.49	4.07	4.44	9.04E+05	1.06E+06	3.51E+05	3.92E+05	9.32E+03	6.10E+05
	2,029	1,974	1,992	7,500	12,400	19,006	3.08	5.05	4.14	2.85	3.81	4.49	4.07	0.46	9.04E+05	1.06E+06	3.51E+05	3.92E+05	9.32E+03	6.10E+05
	2,029	1,974	1,992	7,500	12,400	19,006	3.08	5.05	4.14	2.85	3.81	4.49	4.07	0.46	9.04E+05	1.06E+06	3.51E+05	3.92E+05	9.32E+03	6.10E+05
	19,065	1,974	1,992	7,500	12,400	19,006	3.08	5.05	0.44	2.85	3.81	4.49	4.07	0.46	9.04E+05	1.06E+06	3.74E+04	3.92E+05	9.32E+03	6.10E+05
	19,065	1,974	1,992	7,500	12,400	19,006	3.08	5.05	0.44	2.85	3.81	4.49	4.07	0.46	9.04E+05	1.06E+06	3.74E+04	3.92E+05	9.32E+03	6.10E+05
11/99	19,065	1,974	1,992	7,500	12,400	19,006	3.08	5.05	0.44	2.85	3.81	4.49	4.07	0.46	9.04E+05	1.06E+06	3.74E+04	3.92E+05	9.32E+03	6.10E+05
	19,065	1,974	1,992	7,500	12,400	19,006	3.08	5.05	0.44	2.85	3.81	4.49	4.07	0.46	9.04E+05	1.06E+06	3.74E+04	3.92E+05	9.32E+03	6.10E+05
12/99	19,065	1,974	1,992	7,500	12,400	2,006	3.08	5.05	0.44	2.85	3.81	4.49	4.07	0.46	9.04E+05	1.06E+06	3.74E+04	3.92E+05	9.32E+03	6.10E+05
	2,065	1,974	1,992	7,500	12,400	2,006	3.08	5.05	0.44	2.85	3.81	4.49	4.07	0.46	9.04E+05	1.06E+06	3.74E+04	3.92E+05	9.32E+03	6.10E+05
	2,065	1,974	1,992	7,500	12,400	2,006	3.08	5.05	0.44	2.85	3.81	4.49	4.07	0.46	9.04E+05	1.06E+06	3.74E+04	3.92E+05	9.32E+03	6.10E+05
	2,065	1,974	1,992	7,500	12,400	2,006	3.08	5.05	0.44	2.85	3.81	4.49	4.07	0.46	9.04E+05	1.06E+06	3.74E+04	3.92E+05	9.32E+03	6.10E+05
	2,065	1,974	1,992	7,500	12,400	2,006	3.08	5.05	0.44	2.85	3.81	4.49	4.07	0.46	9.04E+05	1.06E+06	3.74E+04	3.92E+05	9.32E+03	6.10E+05
1/00	2,065	1,974	1,992	7,500	12,400	2,006	3.08	5.05	0.44	2.85	3.81	4.49	4.07	0.46	9.04E+05	1.06E+06	3.74E+04	3.92E+05	9.32E+03	6.10E+05
	2,065	1,974	1,992	7,500	12,400	2,006	3.08	5.05	0.44	2.85	3.81	4.49	4.07	0.46	9.04E+05	1.06E+06	3.74E+04	3.92E+05	9.32E+03	6.10E+05
2/00	2,065	1,974	1,992	7,500	12,400	2,006	3.08	5.05	0.44	2.85	3.81	4.49	4.07	0.46	9.04E+05	1.06E+06	3.74E+04	3.92E+05	9.32E+03	6.10E+05
	2,065	1,974	1,992	7,500	12,400	2,006	3.08	5.05	0.44	2.85	3.81	4.49	4.07	0.46	9.04E+05	1.06E+06	3.74E+04	3.92E+05	9.32E+03	6.10E+05
	2,065	1,974	1,992	7,500	12,400	2,006	0.28	5.05	0.44	2.85	3.81	4.49	4.07	0.46	8.96E+04	1.06E+06	3.74E+04	3.92E+05	9.32E+03	6.10E+05
	2,065	1,974	1,992	7,500	12,400	2,006	0.27	5.05	0.44	2.85	3.81	4.49	4.07	0.46	8.57E+04	1.06E+06	3.74E+04	3.92E+05	9.32E+03	6.10E+05
	2,065	22,108	1,992	7,500	12,400	2,006	0.27	5.05	0.44	0.25	3.81	4.49	4.07	0.46	8.57E+04	1.06E+06	3.74E+04	3.50E+04	9.32E+03	6.10E+05
	2,065	23,108	1,992	7,500	12,400	2,006	0.27	5.05	0.44	0.24	3.81	4.49	4.07	0.46	8.57E+04	1.06E+06	3.74E+04	3.35E+04	9.32E+03	6.10E+05
3/00	2,065	23,108	1,992	7,500	12,400	2,006	0.27	5.05	0.44	0.24	3.81	4.49	4.07	0.46	8.57E+04	1.06E+06	3.74E+04	3.35E+04	9.32E+03	6.10E+05
	2,065	23,108	1,992	7,500	12,400	22,140	0.27	5.05	0.44	0.24	3.81	4.49	4.07	3.68	8.57E+04	1.06E+06	3.74E+04	3.35E+04	9.32E+03	6.10E+05
	2,065	23,108	1,992	7,500	12,400	23,140	0.27	5.05	0.44	0.24	3.81	4.49	4.07	3.52	8.57E+04	1.06E+06	3.74E+04	3.35E+04	9.32E+03	6.10E+05
	2,065	23,108	22,126	7,500	12,400	23,140	0.27	5.05	0.44	0.24	3.98	4.49	4.07	3.52	8.57E+04	1.06E+06	3.74E+04	3.35E+04	1.37E+06	6.10E+05
	2,065	23,108	23,126	7,500	12,400	23,140	0.27	5.05	0.44	0.24	3.81	4.49	4.07	3.52	8.57E+04	1.06E+06	3.74E+04	3.35E+04	1.31E+06	6.10E+05
	2,065	2,608	23,126	7,500	12,400	23,140	0.27	5.05	0.44	0.24	3.81	4.49	4.07	3.52	8.57E+04	1.06E+06	3.74E+04	3.35E+04	1.31E+06	6.10E+05
	2,065	2,608	23,126	7,500	12,400	23,140	0.27	5.05	0.44	0.24	3.81	4.49	4.07	3.52	8.57E+04	1.06E+06	3.74E+04	3.35E+04	1.31E+06	6.10E+05
4/00	2,065	2,608	23,126	7,500	12,400	23,140	0.27	5.05	0.44	0.24	3.81	4.49	4.07	3.52	8.57E+04	1.06E+06	3.74E+04	3.35E+04	1.31E+06	6.10E+05
	2,065	2,608	23,126	7,500	12,400	2,640	0.27	5.05	0.44	0.24	3.81	4.49	4.07	3.52	8.57E+04	1.06E+06	3.74E+04	3.35E+04	1.31E+06	6.10E+05
	2,065	2,608	23,126	7,500	12,400	2,640	0.03	5.05	0.44	0.24	3.81	4.49	4.07	3.52	1.71E+04	1.06E+06	3.74E+04	3.35E+04	1.31E+06	6.10E+05

DATE	te volume in the MVSTs (gallons):						0 1 2 3 4 5 6 7 Nitrates in MVST supernates (M)								Cesium in MVSTs (Bq/ml)					
	W-26	W-27	W-28	W-29	W-30	W-31	W-24	W-25	W-26	W-27	W-28	W-29	W-30	W-31	W-24	W-25	W-26	W-27	W-28	W-29
	2,065	2,608	23,126	7,500	12,400	2,640	0.03	5.05	0.44	0.24	3.81	4.49	4.07	3.52	1.64E+04	1.06E+06	3.74E+04	3.35E+04	1.31E+06	6.10E+05
	22,198	2,608	23,126	7,500	12,400	2,640	0.03	5.05	0.04	0.24	3.81	4.49	4.07	3.52	1.64E+04	1.06E+06	3.48E+03	3.35E+04	1.31E+06	6.10E+05
	23,198	2,608	23,126	7,500	12,400	2,640	0.03	5.05	0.04	0.24	3.81	4.49	4.07	3.52	1.64E+04	1.06E+06	3.33E+03	3.35E+04	1.31E+06	6.10E+05
5/00	23,198	2,608	23,126	7,500	12,400	2,640	0.03	5.05	0.04	0.24	3.81	4.49	4.07	3.52	1.64E+04	1.06E+06	3.33E+03	3.35E+04	1.31E+06	6.10E+05
	23,198	2,608	23,126	7,500	12,400	18,747	0.03	5.05	0.04	0.24	3.81	4.49	4.07	0.50	1.64E+04	1.06E+06	3.33E+03	3.35E+04	1.31E+06	6.10E+05
	23,198	2,608	23,126	7,500	12,400	19,747	0.03	5.05	0.04	0.24	3.81	4.49	4.07	0.47	1.64E+04	1.06E+06	3.33E+03	3.35E+04	1.31E+06	6.10E+05
	23,198	21,936	23,126	7,500	12,400	19,747	0.03	5.05	0.04	0.03	3.81	4.49	4.07	0.47	1.64E+04	1.06E+06	3.33E+03	1.11E+04	1.31E+06	6.10E+05
	23,198	22,936	23,126	7,500	12,400	19,747	0.03	5.05	0.04	0.03	3.81	4.49	4.07	0.47	1.64E+04	1.06E+06	3.33E+03	1.06E+04	1.31E+06	6.10E+05
	23,198	22,936	23,126	7,500	12,400	3,247	0.03	5.05	0.04	0.03	3.81	4.49	4.07	0.47	1.64E+04	1.06E+06	3.33E+03	1.06E+04	1.31E+06	6.10E+05
	23,198	22,936	2,626	7,500	12,400	3,247	0.03	5.05	0.04	0.03	3.81	4.49	4.07	0.47	1.64E+04	1.06E+06	3.33E+03	1.06E+04	1.31E+06	6.10E+05
6/00	23,198	22,936	2,626	7,500	12,400	3,247	0.03	5.05	0.04	0.03	3.81	4.49	4.07	0.47	1.64E+04	1.06E+06	3.33E+03	1.06E+04	1.31E+06	6.10E+05
	23,198	22,936	22,760	7,500	12,400	3,247	0.03	5.05	0.04	0.03	0.44	4.49	4.07	0.47	1.64E+04	1.06E+06	3.33E+03	1.06E+04	1.58E+05	6.10E+05
	23,198	22,936	23,760	7,500	12,400	3,247	0.03	5.05	0.04	0.03	0.42	4.49	4.07	0.47	1.64E+04	1.06E+06	3.33E+03	1.06E+04	1.51E+05	6.10E+05
	23,198	22,936	23,760	7,500	12,400	15,327	0.03	5.05	0.04	0.03	0.42	4.49	4.07	0.10	1.64E+04	1.06E+06	3.33E+03	1.06E+04	1.51E+05	6.10E+05
	23,198	22,936	23,760	7,500	12,400	16,327	0.03	5.05	0.04	0.03	0.42	4.49	4.07	0.09	1.64E+04	1.06E+06	3.33E+03	1.06E+04	1.51E+05	6.10E+05
	23,198	22,936	23,760	7,500	12,400	16,327	0.03	5.05	0.04	0.03	0.42	4.49	4.07	0.09	1.64E+04	1.06E+06	3.33E+03	1.06E+04	1.51E+05	6.10E+05
	23,198	1,936	23,760	7,500	12,400	16,327	0.03	5.05	0.04	0.03	0.42	4.49	4.07	0.09	1.64E+04	1.06E+06	3.33E+03	1.06E+04	1.51E+05	6.10E+05
	1,998	1,936	23,760	7,500	12,400	16,327	0.03	5.05	0.04	0.03	0.42	4.49	4.07	0.09	1.64E+04	1.06E+06	3.33E+03	1.06E+04	1.51E+05	6.10E+05
7/00	1,998	1,936	23,760	7,500	12,400	16,327	0.00	5.05	0.04	0.03	0.42	4.49	4.07	0.09	9.38E+03	1.06E+06	3.33E+03	1.06E+04	1.51E+05	6.10E+05
	1,998	1,936	23,760	7,500	12,400	16,327	0.00	5.05	0.04	0.03	0.42	4.49	4.07	0.09	8.96E+03	1.06E+06	3.33E+03	1.06E+04	1.51E+05	6.10E+05
	18,234	1,936	23,760	7,500	12,400	16,327	0.00	5.05	0.00	0.03	0.42	4.49	4.07	0.09	8.96E+03	1.06E+06	7.58E+03	1.06E+04	1.51E+05	6.10E+05
	19,234	1,936	23,760	7,500	12,400	16,327	0.00	5.05	0.00	0.03	0.42	4.49	4.07	0.09	8.96E+03	1.06E+06	7.18E+03	1.06E+04	1.51E+05	6.10E+05
	19,234	12,760	23,760	7,500	12,400	16,327	0.00	5.05	0.00	0.00	0.42	4.49	4.07	0.09	8.96E+03	1.06E+06	7.18E+03	1.61E+03	1.51E+05	6.10E+05
	19,234	13,760	23,760	7,500	12,400	16,327	0.00	5.05	0.00	0.00	0.42	4.49	4.07	0.09	8.96E+03	1.06E+06	7.18E+03	1.50E+03	1.51E+05	6.10E+05
	19,234	13,760	23,760	7,500	12,400	16,327	0.00	5.05	0.00	0.00	0.42	4.49	4.07	0.09	8.96E+03	1.06E+06	7.18E+03	1.50E+03	1.51E+05	6.10E+05
	19,234	13,760	23,760	7,500	12,400	16,327	0.00	0.63	0.00	0.00	0.42	4.49	4.07	0.09	8.96E+03	1.41E+05	7.18E+03	1.50E+03	1.51E+05	6.10E+05
	19,234	13,760	23,760	7,500	12,400	16,327	0.00	0.60	0.00	0.00	0.42	4.49	4.07	0.09	8.96E+03	1.32E+05	7.18E+03	1.50E+03	1.51E+05	6.10E+05
	19,234	13,760	23,760	7,500	12,400	2,027	0.00	0.60	0.00	0.00	0.42	4.49	4.07	0.09	8.96E+03	1.32E+05	7.18E+03	1.50E+03	1.51E+05	6.10E+05
	19,234	13,760	1,960	7,500	12,400	2,027	0.00	0.60	0.00	0.00	0.42	4.49	4.07	0.09	8.96E+03	1.32E+05	7.18E+03	1.50E+03	1.51E+05	6.10E+05
8/00	19,234	13,760	1,960	7,500	12,400	2,027	0.00	0.60	0.00	0.00	0.42	4.49	4.07	0.09	8.96E+03	1.32E+05	7.18E+03	1.50E+03	1.51E+05	6.10E+05
	19,234	13,760	1,960	7,500	12,400	2,027	0.00	0.60	0.00	0.00	0.42	4.49	4.07	0.09	8.96E+03	1.32E+05	7.18E+03	1.50E+03	1.51E+05	6.10E+05
	1,934	13,760	1,960	7,500	12,400	2,027	0.00	0.60	0.00	0.00	0.42	4.49	4.07	0.09	8.96E+03	1.32E+05	7.18E+03	1.50E+03	1.51E+05	6.10E+05
	1,934	13,760	16,617	7,500	12,400	2,027	0.00	0.60	0.00	0.00	0.05	4.49	4.07	0.09	8.96E+03	1.32E+05	7.18E+03	1.50E+03	2.50E+04	6.10E+05
	1,934	13,760	17,617	7,500	12,400	2,027	0.00	0.60	0.00	0.00	0.05	4.49	4.07	0.09	8.96E+03	1.32E+05	7.18E+03	1.50E+03	2.36E+04	6.10E+05
	1,934	13,760	17,617	7,500	12,400	2,027	0.00	0.60	0.00	0.00	0.05	4.49	4.07	0.09	2.10E+03	1.32E+05	7.18E+03	1.50E+03	2.36E+04	6.10E+05
	1,934	13,760	17,617	7,500	12,400	2,027	0.00	0.60	0.00	0.00	0.05	4.49	4.07	0.09	1.87E+03	1.32E+05	7.18E+03	1.50E+03	2.36E+04	6.10E+05
9/00	1,934	13,760	17,617	7,500	12,400	2,027	0.00	0.60	0.00	0.00	0.05	4.49	4.07	0.09	1.87E+03	1.32E+05	7.18E+03	1.50E+03	2.36E+04	6.10E+05
	1,934	13,760	17,617	7,500	12,400	2,027	0.00	0.60	0.00	0.00	0.05	4.49	4.07	0.09	1.87E+03	1.32E+05	7.18E+03	1.50E+03	2.36E+04	6.10E+05
	1,934	13,760	17,617	7,500	12,400	2,027	0.00	0.60	0.00	0.00	0.05	4.49	4.07	0.09	1.87E+03	1.32E+05	7.18E+03	1.50E+03	2.36E+04	6.10E+05
	1,934	13,760	17,617	7,500	12,400	2,027	0.00	0.60	0.00	0.00	0.05	4.49	4.07	0.09	1.87E+03	1.32E+05	7.18E+03	1.50E+03	2.36E+04	6.10E+05
	1,934	1,960	17,617	7,500	12,400	2,027	0.00	0.60	0.00	0.00	0.05	4.49	4.07	0.09	1.87E+03	1.32E+05	7.18E+03	1.50E+03	2.36E+04	6.10E+05
	1,934	1,960	2,017	7,500	12,400	2,027	0.00	0.60	0.00	0.00	0.05	4.49	4.07	0.09	1.87E+03	1.32E+05	7.18E+03	1.50E+03	2.36E+04	6.10E+05
	1,934	1,960	2,017	7,500	12,400	2,027	0.00	0.60	0.00	0.00	0.05	4.49	4.07	0.09	1.87E+03	1.32E+05	7.18E+03	1.50E+03	2.36E+04	6.10E+05
10/00	1,934	1,960	2,017	7,500	12,400	2,027	0.00	0.60	0.00	0.00	0.05	4.49	4.07	0.09	1.87E+03	1.32E+05	7.18E+03	1.50E+03	2.36E+04	6.10E+05
	1,934	1,960	2,017	7,500	12,400	2,027	0.00	0.60	0.00	0.00	0.05	4.49	4.07	0.09	1.87E+03	1.32E+05	7.18E+03	1.50E+03	2.36E+04	6.10E+05
	1,934	1,960	2,017	7,500	12,400	2,027	0.00	0.60	0.00	0.00	0.05	4.49	4.07	0.09	1.87E+03	1.32E+05	7.18E+03	1.50E+03	2.36E+04	6.10E+05
	1,934	1,960	2,017	7,500	12,400	2,027	0.00	0.60	0.00	0.00	0.05	4.49	4.07	0.09	1.87E+03	1.32E+05	7.18E+03	1.50E+03	2.36E+04	6.10E+05
	1,934	1,960	2,017	7,500	12,400	2,027	0.00	0.60	0.00	0.00	0.05	4.49	4.07	0.09	1.87E+03	1.32E+05	7.18E+03	1.50E+03	2.36E+04	6.10E+05
	1,934	1,960	2,017	7,500	12,400	2,027	0.00	0.60	0.00	0.00	0.05	4.49	4.07	0.09	1.87E+03	1.32E+05	7.18E+03	1.50E+03	2.36E+04	6.10E+05
11/00	1,934	1,960	2,017	7,500	12,400	2,027	0.00	0.60	0.00	0.00	0.05	4.49	4.07	0.09	1.87E+03	1.32E+05	7.18E+03	1.50E+03	2.36E+04	6.10E+05
	1,934	1,960	2,017	7,500	12,400	2,027	0.00	0.60	0.00	0.00	0.05	4.49	4.07	0.09	1.87E+03	1.32E+05	7.18E+03	1.50E+03	2.36E+04	6.10E+05
	1,934	1,960	2,017	7,500	12,400	2,027	0.00	0.60	0.00	0.00	0.05	4.49	4.07	0.09	1.87E+03	1.32E+05	7.18E+03	1.50E+03	2.36E+04	6.10E+05
	1,934	1,960	2,017	7,500	12,400	2,027	0.00	0.60	0.00	0.00	0.05	4.49	4.07	0.09	1.87E+03	1.32E+05	7.18E+03	1.50E+03	2.36E+04	6.10E+05
12/00	1,934	1,960	2,017	7,500	12,400	2,027	0.00	0.60	0.00	0.00	0.05	4.49	4.07	0.09	1.87E+03	1.32E+05	7.18E+03	1.50E+03	2.36E+04	6.10E+05

			0	1	2	3	4	5	6	7											
			Sludge volume in the MVSTs (gallons):								Total sludge	TOTAL VOLUME IN MVSTS (GALLONS):									Total waste in
DATE	W-30	W-31	W-24	W-25	W-26	W-27	W-28	W-29	W-30	W-31	MVSTs	W-24	W-25	W-26	W-27	W-28	W-29	W-30	W-31	MVSTs
1/96	4.20E+05	4.80E+05	13,200	23,400	15,100	17,700	3,800	11,000	11,000	6,400	101,600	22,500	44,200	44,300	44,600	45,600	44,600	21,900	44,100	311,800
2/96	4.20E+05	4.80E+05	13,200	23,400	15,100	17,700	3,800	11,000	11,000	6,400	101,600	22,500	44,200	44,300	44,600	45,600	44,600	21,900	44,100	311,800
3/96	4.20E+05	4.80E+05	13,200	23,400	15,100	17,700	3,800	11,000	11,000	6,400	101,600	22,500	44,200	44,300	44,600	45,600	44,600	21,900	44,100	311,800
4/96	5.57E+05	4.80E+05	13,200	23,400	15,100	17,700	3,800	11,000	11,000	6,400	101,600	22,500	44,200	44,300	44,600	45,600	22,100	39,400	44,100	306,800
5/96	5.57E+05	4.80E+05	13,200	23,400	15,100	17,700	3,800	11,000	11,000	6,400	101,600	22,500	44,200	44,300	44,600	45,600	22,100	39,400	44,100	306,800
6/96	5.57E+05	4.80E+05	13,200	23,400	15,100	17,700	3,800	11,000	11,000	6,400	101,600	22,500	44,200	44,300	44,600	45,600	22,100	39,400	44,100	306,800
7/96	5.57E+05	4.80E+05	13,200	23,400	15,100	17,700	3,800	11,000	11,000	6,400	101,600	22,500	44,200	44,300	44,600	45,600	22,100	39,400	44,100	306,800
8/96	5.57E+05	4.80E+05	13,200	23,400	15,100	17,700	3,800	11,000	11,000	6,400	101,600	23,900	46,800	39,400	43,000	40,700	22,200	40,600	41,400	298,000
9/96	5.57E+05	4.80E+05	13,200	23,400	15,100	17,700	3,800	11,000	11,000	6,400	101,600	23,900	46,800	39,400	43,000	40,700	22,200	40,600	41,400	298,000
10/96	5.57E+05	4.80E+05	13,200	23,400	15,100	17,700	3,800	11,000	11,000	6,400	101,600	23,900	46,800	39,400	43,000	40,700	22,200	40,600	41,400	298,000
11/96	5.57E+05	4.80E+05	13,200	23,400	15,100	17,700	3,800	11,000	11,000	6,400	101,600	23,900	46,800	39,400	19,000	40,700	46,200	40,600	41,400	298,000
12/96	5.57E+05	4.80E+05	13,200	23,400	15,100	17,700	3,800	11,000	11,000	6,400	101,600	23,900	46,800	39,400	36,000	40,700	46,200	23,600	41,400	298,000
1/97	2.00E+05	4.80E+05	13,200	23,400	15,100	17,700	3,800	11,000	11,000	6,400	101,600	23,900	46,800	39,400	36,000	40,700	23,200	46,600	41,400	298,000
2/97	2.00E+05	4.80E+05	13,200	23,400	15,100	17,700	3,800	11,000	11,000	6,400	101,600	23,900	46,800	39,400	36,000	40,700	23,200	46,600	41,400	298,000
3/97	2.00E+05	4.80E+05	13,200	23,400	15,100	17,700	3,800	11,000	11,000	6,400	101,600	23,900	46,800	39,400	36,000	40,700	23,200	46,600	41,400	298,000
4/97	2.00E+05	4.80E+05	13,200	23,400	15,100	17,700	3,800	11,000	11,000	6,400	101,600	23,900	46,800	39,400	36,000	40,700	23,200	46,600	41,400	298,000
5/97	2.00E+05	4.80E+05	13,200	23,400	15,100	17,700	3,800	11,000	11,000	6,400	101,600	23,900	46,800	39,400	36,000	40,700	23,200	46,600	41,400	298,000
6/97	2.00E+05	4.80E+05	13,200	23,400	15,100	17,700	3,800	11,000	11,000	6,400	101,600	23,900	46,800	39,400	36,000	40,700	23,200	46,600	41,400	298,000
7/97	2.00E+05	4.80E+05	13,200	23,400	15,100	17,700	3,800	11,000	11,000	6,400	101,600	23,900	46,800	39,400	36,000	40,700	23,200	46,600	41,400	298,000
	2.00E+05	4.80E+05	13,200	23,400	15,100	17,700	3,762	11,000	11,000	6,400	101,562	23,900	46,800	39,400	36,000	26,662	23,200	46,600	41,400	283,962
	2.00E+05	4.80E+05	13,200	23,400	15,100	17,700	3,724	11,000	11,000	6,400	101,524	23,900	46,800	39,400	36,000	5,624	23,200	46,600	41,400	262,924
8/97	2.00E+05	4.80E+05	13,068	23,400	15,100	17,700	3,724	11,132	11,000	6,400	101,524	16,768	46,800	39,400	36,000	5,624	30,332	46,600	41,400	262,924
	2.00E+05	4.80E+05	13,068	23,166	15,100	17,700	3,724	11,366	11,000	6,400	101,524	16,768	30,066	39,400	36,000	5,624	47,066	46,600	41,400	262,924
	2.00E+05	4.80E+05	13,068	23,166	15,100	17,700	3,724	11,366	11,000	6,400	101,524	40,768	30,066	39,400	36,000	5,624	47,066	22,600	41,400	262,924
9/97	2.00E+05	4.80E+05	13,068	23,166	15,100	17,700	9,521	11,366	11,000	6,400	107,321	40,768	30,066	39,400	36,000	44,747	47,066	22,600	41,400	302,047
	2.00E+05	4.80E+05	13,068	23,166	15,100	17,700	9,521	11,366	11,000	6,400	107,321	40,768	30,066	39,400	36,000	45,747	47,066	22,600	41,400	303,047
	2.00E+05	4.80E+05	13,068	23,166	15,100	17,700	9,521	11,366	11,000	6,400	107,321	40,768	30,066	39,400	36,000	45,747	47,066	22,600	41,400	303,047
	2.00E+05	4.80E+05	13,068	23,166	15,975	17,700	9,521	11,366	11,000	6,400	108,196	40,768	30,066	45,305	36,000	45,747	47,066	22,600	41,400	308,952
	2.00E+05	4.80E+05	13,068	23,166	15,975	17,700	9,521	11,366	11,000	6,400	108,196	40,768	30,066	46,305	36,000	45,747	47,066	22,600	41,400	309,952
	2.00E+05	4.80E+05	13,068	23,166	15,975	19,122	9,521	11,366	11,000	6,400	109,618	40,768	30,066	46,305	45,596	45,747	47,066	22,600	41,400	319,548
	2.00E+05	4.80E+05	13,068	23,166	15,975	19,122	9,521	11,366	11,000	6,400	109,618	40,768	30,066	46,305	46,596	45,747	47,066	22,600	41,400	320,548
	2.00E+05	4.80E+05	13,068	25,463	15,975	19,122	9,521	11,366	11,000	6,400	111,915	40,768	45,567	46,305	46,596	45,747	47,066	22,600	41,400	336,049
	2.00E+05	4.80E+05	13,068	25,463	15,975	19,122	9,521	11,366	11,000	6,400	111,915	40,768	46,567	46,305	46,596	45,747	47,066	22,600	41,400	337,049
	2.00E+05	4.44E+05	13,068	25,463	15,975	19,122	9,521	11,366	11,000	6,963	112,478	40,768	46,567	46,305	46,596	45,747	47,066	22,600	44,782	340,431
	2.00E+05	4.33E+05	13,068	25,463	15,975	19,122	9,521	11,366	11,000	6,963	112,478	40,768	46,567	46,305	46,596	45,747	47,066	22,600	45,782	341,431
10/97	1.24E+06	4.33E+05	13,068	25,463	15,975	19,122	9,521	11,366	11,000	6,963	112,478	40,768	46,567	46,305	46,596	45,747	23,066	30,300	45,782	325,131
11/97	1.24E+06	4.33E+05	12,936	25,463	15,975	19,122	9,521	11,498	11,000	6,963	112,478	17,336	46,567	46,305	46,596	45,747	46,498	30,300	45,782	325,131
12/97	1.11E+06	4.33E+05	12,936	25,463	15,975	19,122	9,521	11,498	11,000	6,963	112,478	17,336	46,567	46,305	46,596	45,747	22,498	43,800	45,782	314,631
1/98	1.11E+06	4.33E+05	12,936	25,463	15,975	19,122	9,521	11,498	11,000	6,963	112,478	17,336	46,567	46,305	46,596	45,747	22,498	22,800	45,782	293,631
	1.11E+06	4.33E+05	12,936	25,463	15,975	19,122	9,521	11,590	11,000	6,871	112,476	17,336	46,567	46,305	46,596	45,747	46,590	22,800	21,689	293,631
	1.11E+06	2.85E+05	12,936	25,463	15,975	19,122	9,521	11,590	11,000	7,671	113,278	17,336	46,567	46,305	46,596	45,747	46,590	22,800	30,389	302,331
	1.11E+06	2.73E+05	12,936	25,463	15,975	19,122	9,521	11,590	11,000	7,671	113,278	17,336	46,567	46,305	46,596	45,747	46,590	22,800	31,389	303,331
2/98	9.08E+05	2.73E+05	12,936	25,463	15,975	19,122	9,521	11,590	11,000	7,671	113,278	17,336	46,567	46,305	46,596	45,747	22,590	37,500	31,389	294,031
3/98	9.08E+05	1.99E+05	12,936	25,463	15,975	19,122	9,521	11,590	11,000	8,971	114,578	17,336	46,567	46,305	46,596	45,747	22,590	37,500	42,189	304,831
	9.08E+05	1.93E+05	12,936	25,463	15,975	19,122	9,521	11,590	11,000	8,971	114,578	17,336	46,567	46,305	46,596	45,747	22,590	37,500	43,189	305,831
	9.08E+05	1.93E+05	12,936	25,463	15,975	19,122	9,521	11,590	11,000	8,971	114,578	17,336	46,567	46,305	46,596	45,747	22,590	37,500	43,189	305,831
	9.08E+05	1.93E+05	12,936	25,463	15,975	19,122	9,521	11,590	11,000	8,971	114,578	17,336	46,567	46,305	46,596	45,747	22,590	37,500	43,189	305,831
	9.08E+05	1.93E+05	12,936	25,463	15,975	19,122	9,521	11,590	11,000	8,971	114,578	17,336	46,567	46,305	46,596	45,747	22,590	37,500	43,189	305,831
4/98	9.08E+05	1.93E+05	14,336	25,463	15,975	19,122	9,521	11,590	11,000	8,971	115,978	32,436	46,567	46,305	46,596	45,747	22,590	37,500	43,189	320,931
	9.08E+05	1.93E+05	14,336	25,463	15,975	19,122	9,521	11,590	11,000	8,971	115,978	33,436	46,567	46,305	46,596	45,747	22,590	37,500	43,189	321,931
	9.08E+05	1.93E+05	14,336	25,463	15,975	19,122	9,521	11,590	11,000	8,971	115,978	38,436	46,567	46,305	46,596	45,747	22,590	32,500	43,189	321,931
	9.08E+05	1.93E+05	16,436	25,463	15,975	19,122	9,521	11,590	11,000	8,971	118,078	41,436	46,567	46,305	46,596	45,747	22,590	32,500	43,189	324,931
	9.08E+05	1.93E+05	16,436	25,463	15,975	19,122	9,521	11,590	11,000	8,971	118,078	42,436	46,567	46,305	46,596	45,747	22,590	32,500	43,189	325,931
	9.08E+05	1.93E+05	16,436	25,463	15,975	18,874	9,521	11,838	11,000	8,971	118,078	42,436	46,567	46,305	26,148	45,747	43,038	32,500	43,189	325,931
5/98	9.08E+05	1.93E+05	16,436	25,463	15,975	19,374	9,521	11,838	11,000	8,971	118,578	42,436	46,567	46,305	31,348	45,747	43,038	32,500	43,189	331,131
	9.08E+05	1.93E+05	16,436	25,463	15,975	19,374	9,521	11,838	11,000	8,971	118,578	42,436	46,567	46,305	32,348	45,747	43,038	32,500	43,189	332,131
6/98	9.18E+05	1.93E+05	16,436	25,463	15,975	19,374	9,521	11,838	11,000	8,971	118,578	42,436	46,567	46,305	32,348	45,747	22,838	45,500	43,189	324,931
	9.18E+05	1.93E+05	16,436	25,463	15,975	19,374	9,521	11,838	11,000	8,971	118,578	42,436	46,567	46,305	32,348	45,747	22,838	45,500	14,189	295,931

DATE	W-30	W-31	0	1	2	3	4	5	6	7	Total sludge MVSTs									Total waste in MVSTs
			Sludge volume in the MVSTs (gallons):									TOTAL VOLUME IN MVSTS (GALLONS):								
			W-24	W-25	W-26	W-27	W-28	W-29	W-30	W-31		W-24	W-25	W-26	W-27	W-28	W-29	W-30	W-31	
	9.18E+05	1.93E+05	16,436	25,463	15,975	19,374	9,197	12,162	11,000	8,971	118,578	42,436	46,567	46,305	32,348	21,923	46,662	45,500	14,189	295,931
7/98	9.18E+05	1.93E+05	16,142	25,463	15,975	19,374	9,197	12,162	11,000	8,971	118,284	22,142	46,567	46,305	32,348	21,923	46,662	45,500	14,189	275,637
	9.18E+05	1.93E+05	16,142	25,463	15,975	19,374	9,197	12,162	11,000	8,971	118,284	22,142	46,567	46,305	32,348	21,923	46,662	19,500	14,189	249,637
	9.18E+05	9.74E+05	16,142	25,463	15,975	19,374	9,197	12,162	11,000	12,251	121,564	22,142	46,567	46,305	32,348	21,923	46,662	19,500	39,373	274,821
	9.18E+05	9.74E+05	16,142	25,463	15,975	19,374	9,197	12,162	11,000	12,251	121,564	23,142	46,567	46,305	32,348	21,923	46,662	19,500	39,373	275,821
8/98	9.18E+05	9.74E+05	16,142	25,463	15,975	19,374	9,197	12,162	11,000	12,251	121,564	23,142	46,567	46,305	32,348	21,923	46,662	19,500	39,373	275,821
	9.18E+05	1.00E+06	16,142	25,463	15,975	19,374	9,197	12,162	11,000	13,071	122,384	23,142	46,567	46,305	32,348	21,923	46,662	19,500	45,669	282,117
	9.18E+05	9.72E+05	16,142	25,463	15,975	19,374	9,197	12,162	11,000	13,071	122,384	23,142	46,567	46,305	32,348	21,923	46,662	19,500	46,669	283,117
	9.18E+05	9.72E+05	16,142	25,463	15,975	19,374	9,197	12,162	11,000	13,071	122,384	23,142	46,567	46,305	32,348	21,923	46,662	19,500	46,669	283,117
	9.18E+05	9.72E+05	16,142	25,463	15,975	19,374	11,985	12,162	11,000	13,071	125,172	23,142	46,567	46,305	32,348	43,329	46,662	19,500	46,669	304,523
	9.18E+05	9.72E+05	16,142	25,463	15,975	19,374	11,985	12,162	11,000	13,071	125,172	23,142	46,567	46,305	32,348	44,329	46,662	19,500	46,669	305,523
	9.18E+05	9.72E+05	16,142	25,463	15,975	19,374	11,985	12,162	11,000	13,071	125,172	23,142	46,567	46,305	32,348	44,329	46,662	19,500	46,669	305,523
	9.18E+05	9.72E+05	19,094	25,463	15,975	19,374	11,985	12,162	11,000	13,071	128,124	45,808	46,567	46,305	32,348	44,329	46,662	19,500	46,669	328,189
	9.18E+05	9.72E+05	19,094	25,463	15,975	19,374	11,985	12,162	11,000	13,071	128,124	46,808	46,567	46,305	32,348	44,329	46,662	19,500	46,669	329,189
	9.18E+05	9.72E+05	19,094	25,463	15,780	19,374	11,985	12,162	11,000	13,071	127,929	46,808	46,567	23,111	32,348	44,329	46,662	19,500	46,669	305,994
9/98	9.18E+05	9.72E+05	19,094	25,463	15,780	19,374	11,985	12,156	11,000	13,071	127,924	46,808	46,567	23,111	32,348	44,329	23,156	19,500	46,669	282,488
	9.56E+05	9.72E+05	19,094	25,463	15,780	19,374	11,985	12,156	11,398	12,673	127,924	46,808	46,567	23,111	32,348	44,329	23,156	44,898	21,272	282,488
	9.56E+05	9.72E+05	19,094	25,463	15,780	19,374	11,985	12,534	11,398	12,295	127,924	46,808	46,567	23,111	32,348	44,329	29,534	44,898	14,894	282,488
	9.56E+05	1.26E+06	19,094	25,463	15,780	19,374	11,985	12,534	11,398	16,067	131,696	46,808	46,567	23,111	32,348	44,329	29,534	44,898	43,855	311,449
	9.56E+05	1.22E+06	19,094	25,463	15,780	19,374	11,985	12,534	11,398	16,067	131,696	46,808	46,567	23,111	32,348	44,329	29,534	44,898	44,855	312,449
	9.56E+05	1.22E+06	19,094	25,463	18,840	19,374	11,985	12,534	11,398	16,067	134,755	46,808	46,567	44,969	32,348	44,329	29,534	44,898	44,855	334,308
	9.56E+05	1.22E+06	19,094	25,463	18,840	19,374	11,985	12,534	11,398	16,067	134,755	46,808	46,567	45,969	32,348	44,329	29,534	44,898	44,855	335,308
10/98	9.56E+05	1.22E+06	19,094	25,463	18,840	19,374	11,985	12,534	11,396	16,067	134,753	46,808	46,567	45,969	32,348	44,329	29,534	22,896	44,855	313,306
	8.84E+05	1.22E+06	19,094	25,463	18,840	19,374	11,536	12,534	11,843	16,067	134,753	46,808	46,567	45,969	32,348	21,182	29,534	46,043	44,855	313,306
	8.84E+05	1.22E+06	19,094	25,463	18,840	19,374	11,113	12,959	11,843	16,067	134,753	46,808	46,567	45,969	32,348	13,057	37,659	46,043	44,855	313,306
	8.84E+05	1.22E+06	18,667	25,463	18,840	19,374	11,113	13,386	11,843	16,067	134,753	39,381	46,567	45,969	32,348	13,057	45,086	46,043	44,855	313,306
	8.84E+05	1.22E+06	18,667	25,463	18,840	19,374	11,113	13,386	11,843	16,067	134,753	39,381	46,567	45,969	32,348	13,057	45,086	46,043	44,855	313,306
11/98	8.84E+05	1.22E+06	18,667	25,463	18,840	19,374	17,913	13,386	11,843	16,067	141,553	39,381	46,567	45,969	32,348	32,666	45,086	46,043	44,855	332,915
	8.84E+05	1.22E+06	18,667	25,463	18,840	19,374	17,913	13,386	11,843	16,067	141,553	39,381	46,567	45,969	32,348	33,666	45,086	46,043	44,855	333,915
	8.84E+05	1.22E+06	18,667	25,463	18,840	19,374	17,913	13,386	11,839	16,067	141,549	39,381	46,567	45,969	32,348	33,666	45,086	22,039	44,855	309,911
	8.84E+05	1.22E+06	18,667	25,463	18,840	19,374	17,913	13,374	11,839	16,067	141,537	39,381	46,567	45,969	32,348	33,666	21,074	22,039	44,855	285,899
	1.12E+06	1.22E+06	18,667	25,463	18,840	19,374	17,913	13,374	12,386	15,520	141,537	39,381	46,567	45,969	32,348	33,666	21,074	46,586	20,308	285,899
12/98	1.12E+06	1.22E+06	18,667	25,463	18,840	19,374	17,913	13,374	12,386	15,520	141,537	39,381	46,567	45,969	32,348	33,666	21,074	46,586	20,308	285,899
	1.12E+06	1.22E+06	18,667	25,463	18,840	19,374	17,913	13,374	12,386	15,520	141,537	39,381	46,567	45,969	32,348	33,666	21,074	46,586	20,308	285,899
	1.12E+06	1.22E+06	18,667	25,126	18,840	19,374	17,913	13,711	12,386	15,520	141,537	39,381	27,130	45,969	32,348	33,666	40,511	46,586	20,308	285,899
	1.12E+06	1.22E+06	18,667	25,126	18,840	19,374	17,913	13,711	12,386	15,520	141,537	39,381	27,130	45,969	32,348	33,666	40,511	46,586	20,308	285,899
	1.12E+06	1.22E+06	18,667	25,126	18,840	19,374	17,913	13,711	12,386	15,520	141,537	39,381	27,130	45,969	32,348	19,866	40,511	46,586	20,308	272,099
	1.12E+06	1.22E+06	18,667	25,126	18,840	19,374	17,913	13,711	12,386	15,520	141,537	20,681	27,130	45,969	32,348	19,866	40,511	46,586	20,308	253,399
	1.12E+06	1.22E+06	18,667	25,126	18,840	19,374	17,913	13,711	12,386	15,520	141,537	20,681	27,130	45,969	32,348	19,866	40,511	46,586	20,308	253,399
	1.12E+06	1.22E+06	18,667	25,126	18,840	19,374	17,913	13,711	12,386	15,520	141,537	20,681	27,130	45,969	32,348	19,866	40,511	46,586	20,308	253,399
1/99	1.12E+06	1.22E+06	18,667	25,126	18,840	19,374	17,913	13,711	12,386	15,520	141,537	20,681	27,130	45,969	32,348	19,866	40,511	46,586	20,308	253,399
	1.12E+06	1.22E+06	18,667	25,126	18,840	19,374	17,913	13,711	12,386	15,520	141,537	20,681	27,130	45,969	32,348	19,866	40,511	46,586	20,308	253,399
	1.12E+06	1.22E+06	18,667	25,126	18,840	19,374	17,913	13,711	12,386	15,520	141,537	20,681	27,130	45,969	32,348	19,866	40,511	46,586	20,308	253,399
	1.12E+06	1.22E+06	18,667	25,126	18,840	19,374	17,913	13,711	12,386	15,520	141,537	20,681	27,130	45,969	32,348	19,866	40,511	46,586	20,308	253,399
	1.12E+06	1.22E+06	18,667	25,126	18,840	19,374	17,913	13,697	12,386	15,520	141,524	20,681	27,130	45,969	32,348	19,866	22,497	46,586	20,308	235,386
	1.12E+06	1.22E+06	18,667	25,126	18,840	19,374	17,913	13,697	12,379	15,520	141,517	20,681	27,130	45,969	32,348	19,866	22,497	22,579	20,308	211,379
2/99	1.12E+06	1.22E+06	18,667	25,126	18,840	19,374	17,913	13,697	12,379	15,520	141,517	20,681	27,130	45,969	21,348	19,866	22,497	22,579	20,308	200,379
	5.95E+05	1.22E+06	18,667	25,126	18,502	19,374	17,913	13,697	12,717	15,520	141,517	20,681	27,130	23,631	21,348	19,866	22,497	44,917	20,308	200,379
	5.95E+05	1.22E+06	18,667	25,126	18,502	19,374	17,913	14,217	12,717	15,000	141,517	20,681	27,130	23,631	21,348	19,866	25,817	44,917	16,988	200,379
	5.95E+05	1.22E+06	18,667	25,126	18,181	19,374	17,913	14,539	12,717	15,000	141,517	20,681	27,130	20,210	21,348	19,866	29,239	44,917	16,988	200,379
3/99	5.95E+05	1.22E+06	18,667	25,126	18,181	19,374	17,913	14,539	12,717	15,000	141,517	20,681	27,130	20,210	21,348	19,866	29,239	44,917	16,988	200,379
	5.95E+05	1.22E+06	18,667	25,126	18,181	19,374	17,913	14,539	12,717	15,000	141,517	20,681	27,130	20,210	21,348	19,866	29,239	44,917	16,988	200,379
	5.95E+05	1.22E+06	18,667	25,126	18,181	19,374	17,913	14,539	12,717	15,000	141,517	20,681	27,130	20,210	21,348	19,866	29,239	44,917	16,988	200,379
	5.95E+05	1.22E+06	18,667	25,126	18,181	19,374	17,913	14,539	12,717	15,000	141,517	20,681	27,130	20,210	21,348	19,866	29,239	44,917	16,988	200,379
	5.95E+05	1.22E+06	18,667	25,126	18,181	19,374	17,913	14,539	12,717	15,000	141,517	20,681	27,130	20,210	21,348	19,866	29,239	44,917	16,988	200,379
4/99	5.95E+05	1.22E+06	18,667	25,126	18,181	19,374	17,913	14,539	12,717	15,000	141,517	20,681	27,130	20,210	21,348	19,866	29,239	44,917	16,988	200,379
	5.95E+05	1.22E+06	18,667	25,126	18,181	19,374	17,913	14,521	12,717	15,000	141,499	20,681	27,130	20,210	21,348	19,866	25,521	44,917	16,988	196,661
	5.95E+05	1.22E+06	18,667	25,126	18,181	19,374	17,913	14,521	12,708	15,000	141,490	20,681	27,130	20,210	21,348	19,866	25,521	22,408	16,988	174,152

DATE	W-30	W-31	0 Sludge volume in the MVSTs (gallons): W-24	1 W-25	2 W-26	3 W-27	4 W-28	5 W-29	6 W-30	7 W-31	Total sludge MVSTs	TOTAL VOLUME IN MVSTS (GALLONS): W-24	W-25	W-26	W-27	W-28	W-29	W-30	W-31	Total waste in MVSTs
	5.95E+05	1.34E+05	18,667	25,126	18,181	19,374	17,913	14,521	12,708	16,407	142,897	20,681	27,130	20,210	21,348	19,866	25,521	22,408	34,561	191,725
	5.95E+05	1.27E+05	18,667	25,126	18,181	19,374	17,913	14,521	12,708	16,407	142,897	20,681	27,130	20,210	21,348	19,866	25,521	22,408	35,561	192,725
5/99	5.95E+05	4.73E+05	18,667	25,126	18,181	19,374	17,913	14,521	12,708	16,987	143,477	20,681	27,130	20,210	21,348	19,866	25,521	22,408	44,257	201,422
	5.95E+05	4.56E+05	18,667	25,126	18,181	19,374	17,913	14,521	12,708	16,987	143,477	20,681	27,130	20,210	21,348	19,866	25,521	22,408	45,257	202,422
	5.95E+05	4.56E+05	18,667	25,126	18,181	19,374	19,265	14,521	12,708	16,987	144,829	20,681	27,130	20,210	21,348	40,158	25,521	22,408	45,257	222,714
	5.95E+05	4.56E+05	18,667	25,126	18,181	19,374	19,265	14,521	12,708	16,987	144,829	20,681	27,130	20,210	21,348	41,158	25,521	22,408	45,257	223,714
6/99	5.95E+05	4.56E+05	18,667	25,126	18,181	19,374	19,265	14,521	12,708	16,987	144,829	20,681	27,130	20,210	21,348	41,158	25,521	22,408	45,257	223,714
	5.95E+05	4.56E+05	18,667	25,126	18,181	19,374	19,265	14,521	12,708	16,987	144,829	20,681	27,130	20,210	21,348	41,158	25,521	22,408	45,257	223,714
	5.95E+05	4.56E+05	18,667	25,126	18,181	19,374	19,265	14,521	12,708	16,987	144,829	20,681	27,130	20,210	21,348	41,158	25,521	22,408	45,257	223,714
	5.95E+05	4.56E+05	18,667	25,126	18,181	19,374	19,265	14,521	12,708	16,987	144,829	20,681	27,130	20,210	21,348	41,158	25,521	22,408	45,257	223,714
	5.95E+05	4.56E+05	18,667	25,126	18,181	19,374	19,265	14,521	12,708	16,987	144,829	20,681	27,130	20,210	21,348	41,158	25,521	22,408	45,257	223,714
7/99	5.95E+05	4.56E+05	18,667	25,126	18,181	19,374	19,265	15,114	12,708	16,393	144,829	20,681	27,130	20,210	21,348	41,158	46,114	22,408	24,664	223,714
	5.56E+05	4.56E+05	18,667	25,126	18,181	19,374	19,265	15,114	13,272	15,830	144,829	20,681	27,130	20,210	21,348	41,158	46,114	26,772	20,300	223,714
	2.40E+05	4.56E+05	18,667	25,126	18,181	19,374	18,454	15,114	14,083	15,830	144,829	20,681	27,130	20,210	21,348	21,846	46,114	46,083	20,300	223,714
	2.40E+05	4.56E+05	18,667	25,126	18,181	19,374	18,454	15,114	14,083	15,830	144,829	20,681	27,130	20,210	21,348	21,846	46,114	46,083	20,300	223,714
	2.40E+05	4.56E+05	18,667	25,126	18,181	19,374	18,454	15,114	14,083	15,830	144,829	20,681	27,130	20,210	21,348	21,846	46,114	46,083	20,300	223,714
	2.40E+05	4.56E+05	18,667	25,126	18,181	19,374	18,454	15,114	14,083	15,830	144,829	20,681	27,130	20,210	21,348	21,846	46,114	46,083	20,300	223,714
8/99	2.40E+05	4.56E+05	18,667	25,126	18,181	19,374	18,454	15,094	14,083	15,830	144,809	20,681	27,130	20,210	21,348	21,846	22,594	46,083	20,300	200,193
	2.40E+05	4.56E+05	18,667	25,126	18,181	19,374	18,454	15,094	14,068	15,830	144,793	20,681	27,130	20,210	21,348	21,846	22,594	22,568	20,300	176,678
	2.40E+05	4.56E+05	18,667	25,126	18,181	19,374	18,454	15,094	14,068	15,830	144,793	20,681	27,130	20,210	21,348	21,846	22,594	22,568	20,300	176,678
	2.69E+05	4.56E+05	18,667	25,126	18,181	19,374	18,454	15,094	14,603	15,294	144,793	20,681	27,130	20,210	21,348	21,846	22,594	25,603	17,265	176,678
	2.57E+05	4.56E+05	18,667	25,126	18,181	19,374	17,683	15,094	15,374	15,294	144,793	20,681	27,130	20,210	21,348	19,676	22,594	27,774	17,265	176,678
9/99	2.57E+05	4.56E+05	18,667	25,126	18,181	19,374	17,683	15,094	15,374	15,294	144,793	20,681	27,130	20,210	21,348	19,676	22,594	27,774	17,265	176,678
	2.57E+05	4.56E+05	18,667	25,126	18,181	19,374	17,683	15,094	15,374	15,294	144,793	20,681	27,130	20,210	21,348	19,676	22,594	27,774	17,265	176,678
	2.57E+05	4.56E+05	18,667	25,126	18,181	19,374	17,683	15,094	15,374	15,294	144,793	20,681	27,130	20,210	21,348	19,676	22,594	27,774	17,265	176,678
	2.57E+05	4.56E+05	18,667	25,126	18,181	19,374	17,683	15,094	15,374	15,294	144,793	20,681	27,130	20,210	21,348	19,676	22,594	27,774	17,265	176,678
	2.57E+05	4.56E+05	18,667	25,126	18,181	19,374	17,683	15,094	15,374	15,294	144,793	20,681	27,130	20,210	21,348	19,676	22,594	27,774	17,265	176,678
	2.57E+05	4.56E+05	18,667	25,126	18,181	19,374	17,683	15,094	15,374	15,294	144,793	20,681	27,130	20,210	21,348	19,676	22,594	27,774	17,265	176,678
10/99	2.57E+05	4.56E+05	18,667	25,126	18,181	19,374	17,683	15,094	15,374	15,294	144,793	20,681	27,130	20,210	21,348	19,676	22,594	27,774	17,265	176,678
	2.57E+05	6.16E+04	18,667	25,126	18,181	19,374	17,683	15,094	15,374	20,494	149,993	20,681	27,130	20,210	21,348	19,676	22,594	27,774	39,500	198,913
	2.57E+05	6.16E+04	18,667	25,126	18,181	19,374	17,683	15,094	15,374	20,494	149,993	20,681	27,130	20,210	21,348	19,676	22,594	27,774	39,500	198,913
	2.57E+05	6.16E+04	18,667	25,126	23,381	19,374	17,683	15,094	15,374	20,494	155,193	20,681	27,130	42,445	21,348	19,676	22,594	27,774	39,500	221,148
	2.57E+05	6.16E+04	18,667	25,126	23,381	19,374	17,683	15,094	15,374	20,494	155,193	20,681	27,130	42,445	21,348	19,676	22,594	27,774	39,500	221,148
11/99	2.57E+05	6.16E+04	18,667	25,126	23,381	19,374	17,683	15,094	15,374	20,494	155,193	20,681	27,130	42,445	21,348	19,676	22,594	27,774	39,500	221,148
	2.57E+05	6.16E+04	18,667	25,126	23,381	19,374	17,683	15,094	15,374	20,494	155,193	20,681	27,130	42,445	21,348	19,676	22,594	27,774	39,500	221,148
12/99	2.57E+05	6.16E+04	18,667	25,126	23,381	19,374	17,683	15,094	15,374	20,494	155,193	20,681	27,130	42,445	21,348	19,676	22,594	27,774	22,500	204,148
	2.57E+05	6.16E+04	18,667	25,126	23,381	19,374	17,683	15,094	15,374	20,494	155,193	20,681	27,130	25,445	21,348	19,676	22,594	27,774	22,500	187,148
	2.57E+05	6.16E+04	18,667	25,126	23,381	19,374	17,683	15,094	15,374	20,494	155,193	20,681	27,130	25,445	21,348	19,676	22,594	27,774	22,500	187,148
	2.57E+05	6.16E+04	18,667	25,126	23,381	19,374	17,683	15,094	15,374	20,494	155,193	20,681	27,130	25,445	21,348	19,676	22,594	27,774	22,500	187,148
	2.57E+05	6.16E+04	18,667	25,126	23,381	19,374	17,683	15,094	15,374	20,494	155,193	20,681	27,130	25,445	21,348	19,676	22,594	27,774	22,500	187,148
1/00	2.57E+05	6.16E+04	18,667	25,126	23,381	19,374	17,683	15,094	15,374	20,494	155,193	20,681	27,130	25,445	21,348	19,676	22,594	27,774	22,500	187,148
	2.57E+05	6.16E+04	18,667	25,126	23,381	19,374	17,683	15,094	15,374	20,494	155,193	20,681	27,130	25,445	21,348	19,676	22,594	27,774	22,500	187,148
2/00	2.57E+05	6.16E+04	18,667	25,126	23,381	19,374	17,683	15,094	15,374	20,494	155,193	20,681	27,130	25,445	21,348	19,676	22,594	27,774	22,500	187,148
	2.57E+05	6.16E+04	18,667	25,126	23,381	19,374	17,683	15,094	15,374	20,494	155,193	20,681	27,130	25,445	21,348	19,676	22,594	27,774	22,500	187,148
	2.57E+05	6.16E+04	21,491	25,126	23,381	19,374	17,683	15,094	15,374	20,494	158,017	43,638	27,130	25,445	21,348	19,676	22,594	27,774	22,500	210,106
	2.57E+05	6.16E+04	21,491	25,126	23,381	19,374	17,683	15,094	15,374	20,494	158,017	44,638	27,130	25,445	21,348	19,676	22,594	27,774	22,500	211,106
	2.57E+05	6.16E+04	21,491	25,126	23,381	22,198	17,683	15,094	15,374	20,494	160,841	44,638	27,130	25,445	44,306	19,676	22,594	27,774	22,500	234,063
	2.57E+05	6.16E+04	21,491	25,126	23,381	22,198	17,683	15,094	15,374	20,494	160,841	44,638	27,130	25,445	45,306	19,676	22,594	27,774	22,500	235,063
3/00	2.57E+05	6.16E+04	21,491	25,126	23,381	22,198	17,683	15,094	15,374	20,494	160,841	44,638	27,130	25,445	45,306	19,676	22,594	27,774	22,500	235,063
	2.57E+05	1.37E+06	21,491	25,126	23,381	22,198	17,683	15,094	15,374	23,318	163,665	44,638	27,130	25,445	45,306	19,676	22,594	27,774	45,458	258,021
	2.57E+05	1.31E+06	21,491	25,126	23,381	22,198	17,683	15,094	15,374	23,318	163,665	44,638	27,130	25,445	45,306	19,676	22,594	27,774	46,458	259,021
	2.57E+05	1.31E+06	21,491	25,126	23,381	22,198	20,507	15,094	15,374	23,318	166,488	44,638	27,130	25,445	45,306	42,633	22,594	27,774	46,458	281,978
	2.57E+05	1.31E+06	21,491	25,126	23,381	22,198	20,507	15,094	15,374	23,318	166,488	44,638	27,130	25,445	45,306	43,633	22,594	27,774	46,458	282,978
	2.57E+05	1.31E+06	21,491	25,126	23,381	22,198	20,507	15,094	15,374	23,318	166,488	44,638	27,130	25,445	24,806	43,633	22,594	27,774	46,458	262,478
	2.57E+05	1.31E+06	21,491	25,126	23,381	22,198	20,507	15,094	15,374	23,318	166,488	24,138	27,130	25,445	24,806	43,633	22,594	27,774	46,458	241,978
4/00	2.57E+05	1.31E+06	21,491	25,126	23,381	22,198	20,507	15,094	15,374	23,318	166,488	24,138	27,130	25,445	24,806	43,633	22,594	27,774	46,458	241,978
	2.57E+05	1.31E+06	21,491	25,126	23,381	22,198	20,507	15,094	15,374	23,318	166,488	24,138	27,130	25,445	24,806	43,633	22,594	27,774	25,958	221,478
	2.57E+05	1.31E+06	21,491	25,126	23,381	22,198	20,507	15,094	15,374	23,318	166,488	44,272	27,130	25,445	24,806	43,633	22,594	27,774	25,958	241,812

DATE	W-30	W-31	0 Sludge volume in the MVSTs (gallons): W-24	1 W-25	2 W-26	3 W-27	4 W-28	5 W-29	6 W-30	7 W-31	Total sludge MVSTs	TOTAL VOLUME IN MVSTS (GALLONS): W-24	W-25	W-26	W-27	W-28	W-29	W-30	W-31	Total waste in MVSTs
	2.57E+05	1.31E+06	21,491	25,126	23,381	22,198	20,507	15,094	15,374	23,318	166,488	45,272	27,130	25,445	24,806	43,633	22,594	27,774	25,958	242,612
	2.57E+05	1.31E+06	21,491	25,126	23,381	22,198	20,507	15,094	15,374	23,318	166,488	45,272	27,130	45,579	24,806	43,633	22,594	27,774	25,958	262,746
	2.57E+05	1.31E+06	21,491	25,126	23,381	22,198	20,507	15,094	15,374	23,318	166,488	45,272	27,130	46,579	24,806	43,633	22,594	27,774	25,958	263,746
5/00	2.57E+05	1.31E+06	21,491	25,126	23,381	22,198	20,507	15,094	15,374	23,318	166,488	45,272	27,130	46,579	24,806	43,633	22,594	27,774	25,958	263,746
	2.57E+05	1.91E+05	21,491	25,126	23,381	22,198	20,507	15,094	15,374	25,577	168,747	45,272	27,130	46,579	24,806	43,633	22,594	27,774	44,324	282,112
	2.57E+05	1.82E+05	21,491	25,126	23,381	22,198	20,507	15,094	15,374	25,577	168,747	45,272	27,130	46,579	24,806	43,633	22,594	27,774	45,324	283,112
	2.57E+05	1.82E+05	21,491	25,126	23,381	24,908	20,507	15,094	15,374	25,577	171,458	45,272	27,130	46,579	46,845	43,633	22,594	27,774	45,324	305,151
	2.57E+05	1.82E+05	21,491	25,126	23,381	24,908	20,507	15,094	15,374	25,577	171,458	45,272	27,130	46,579	47,845	43,633	22,594	27,774	45,324	306,151
	2.57E+05	1.82E+05	21,491	25,126	23,381	24,908	20,507	15,094	15,374	25,577	171,458	45,272	27,130	46,579	47,845	43,633	22,594	27,774	28,824	289,651
	2.57E+05	1.82E+05	21,491	25,126	23,381	24,908	20,507	15,094	15,374	25,577	171,458	45,272	27,130	46,579	47,845	23,133	22,594	27,774	28,824	269,151
6/00	2.57E+05	1.82E+05	21,491	25,126	23,381	24,908	20,507	15,094	15,374	25,577	171,458	45,272	27,130	46,579	47,845	23,133	22,594	27,774	28,824	269,151
	2.57E+05	1.82E+05	21,491	25,126	23,381	24,908	23,331	15,094	15,374	25,577	174,282	45,272	27,130	46,579	47,845	46,091	22,594	27,774	28,824	292,108
	2.57E+05	1.82E+05	21,491	25,126	23,381	24,908	23,331	15,094	15,374	25,577	174,282	45,272	27,130	46,579	47,845	47,091	22,594	27,774	28,824	293,108
	2.57E+05	4.49E+04	21,491	25,126	23,381	24,908	23,331	15,094	15,374	27,271	175,976	45,272	27,130	46,579	47,845	47,091	22,594	27,774	42,598	306,883
	2.57E+05	4.21E+04	21,491	25,126	23,381	24,908	23,331	15,094	15,374	27,271	175,976	45,272	27,130	46,579	47,845	47,091	22,594	27,774	43,598	307,883
	2.57E+05	4.21E+04	21,491	25,126	23,381	24,908	23,331	15,094	15,374	27,271	175,976	24,772	27,130	46,579	47,845	47,091	22,594	27,774	43,598	287,383
	2.57E+05	4.21E+04	21,491	25,126	23,381	24,908	23,331	15,094	15,374	27,271	175,976	24,772	27,130	46,579	26,845	47,091	22,594	27,774	43,598	266,383
	2.57E+05	4.21E+04	21,491	25,126	23,381	24,908	23,331	15,094	15,374	27,271	175,976	24,772	27,130	25,379	26,845	47,091	22,594	27,774	43,598	245,183
7/00	2.57E+05	4.21E+04	24,645	25,126	23,381	24,908	23,331	15,094	15,374	27,271	179,130	45,966	27,130	25,379	26,845	47,091	22,594	27,774	43,598	266,377
	2.57E+05	4.21E+04	24,645	25,126	23,381	24,908	23,331	15,094	15,374	27,271	179,130	46,966	27,130	25,379	26,845	47,091	22,594	27,774	43,598	267,377
	2.57E+05	4.21E+04	24,645	25,126	26,220	24,908	23,331	15,094	15,374	27,271	181,969	46,966	27,130	44,454	26,845	47,091	22,594	27,774	43,598	286,451
	2.57E+05	4.21E+04	24,645	25,126	26,220	24,908	23,331	15,094	15,374	27,271	181,969	46,966	27,130	45,454	26,845	47,091	22,594	27,774	43,598	287,451
	2.57E+05	4.21E+04	24,645	25,126	26,220	26,801	23,331	15,094	15,374	27,271	183,861	46,966	27,130	45,454	39,561	47,091	22,594	27,774	43,598	300,168
	2.57E+05	4.21E+04	24,645	25,126	26,220	26,801	23,331	15,094	15,374	27,271	183,861	46,966	27,130	45,454	40,561	47,091	22,594	27,774	43,598	301,168
	2.57E+05	4.21E+04	24,645	25,126	26,220	26,801	23,331	15,094	15,374	27,271	183,861	46,966	27,130	45,454	40,561	47,091	22,594	27,774	43,598	301,168
	2.57E+05	4.21E+04	24,645	27,084	26,220	26,801	23,331	15,094	15,374	27,271	185,819	46,966	43,047	45,454	40,561	47,091	22,594	27,774	43,598	317,085
	2.57E+05	4.21E+04	24,645	27,084	26,220	26,801	23,331	15,094	15,374	27,271	185,819	46,966	44,047	45,454	40,561	47,091	22,594	27,774	43,598	318,085
	2.57E+05	4.21E+04	24,645	27,084	26,220	26,801	23,331	15,094	15,374	27,271	185,819	46,966	44,047	45,454	40,561	47,091	22,594	27,774	29,298	303,785
	2.57E+05	4.21E+04	24,645	27,084	26,220	26,801	23,331	15,094	15,374	27,271	185,819	46,966	44,047	45,454	40,561	25,291	22,594	27,774	29,298	281,985
8/00	2.57E+05	4.21E+04	24,645	27,084	26,220	26,801	23,331	15,094	15,374	27,271	185,819	26,566	44,047	45,454	40,561	25,291	22,594	27,774	29,298	261,585
	2.57E+05	4.21E+04	24,645	27,084	26,220	26,801	23,331	15,094	15,374	27,271	185,819	26,566	29,047	45,454	40,561	25,291	22,594	27,774	29,298	246,585
	2.57E+05	4.21E+04	24,645	27,084	26,220	26,801	23,331	15,094	15,374	27,271	185,819	26,566	29,047	28,154	40,561	25,291	22,594	27,774	29,298	229,285
	2.57E+05	4.21E+04	24,645	27,084	26,220	26,801	25,387	15,094	15,374	27,271	187,875	26,566	29,047	28,154	40,561	42,004	22,594	27,774	29,298	245,998
	2.57E+05	4.21E+04	24,645	27,084	26,220	26,801	25,387	15,094	15,374	27,271	187,875	26,566	29,047	28,154	40,561	43,004	22,594	27,774	29,298	246,998
	2.57E+05	4.21E+04	25,526	27,084	26,220	26,801	25,387	15,094	15,374	27,271	188,756	33,729	29,047	28,154	40,561	43,004	22,594	27,774	29,298	254,161
	2.57E+05	4.21E+04	25,526	27,084	26,220	26,801	25,387	15,094	15,374	27,271	188,756	34,729	29,047	28,154	40,561	43,004	22,594	27,774	29,298	255,161
9/00	2.57E+05	4.21E+04	25,526	27,084	26,220	26,801	25,387	15,094	15,374	27,271	188,756	34,729	29,047	28,154	40,561	43,004	22,594	27,774	29,298	255,161
	2.57E+05	4.21E+04	25,526	27,084	26,220	26,801	25,387	15,094	15,374	27,271	188,756	34,729	29,047	28,154	40,561	43,004	22,594	27,774	29,298	255,161
	2.57E+05	4.21E+04	25,526	27,084	26,220	26,801	25,387	15,094	15,374	27,271	188,756	34,729	29,047	28,154	40,561	43,004	22,594	27,774	29,298	255,161
	2.57E+05	4.21E+04	25,526	27,084	26,220	26,801	25,387	15,094	15,374	27,271	0	34,729	29,047	28,154	28,761	43,004	22,594	27,774	29,298	243,361
	2.57E+05	4.21E+04	25,526	27,084	26,220	26,801	25,387	15,094	15,374	27,271	0	34,729	29,047	28,154	28,761	27,404	22,594	27,774	29,298	227,761
	2.57E+05	4.21E+04	25,526	27,084	26,220	26,801	25,387	15,094	15,374	27,271	0	27,529	29,047	28,154	28,761	27,404	22,594	27,774	29,298	220,561
10/00	2.57E+05	4.21E+04	25,526	27,084	26,220	26,801	25,387	15,094	15,374	27,271	0	27,529	29,047	28,154	28,761	27,404	22,594	27,774	29,298	220,561
	2.57E+05	4.21E+04	25,526	27,084	26,220	26,801	25,387	15,094	15,374	27,271	0	27,529	29,047	28,154	28,761	27,404	22,594	27,774	29,298	220,561
	2.57E+05	4.21E+04	25,526	27,084	26,220	26,801	25,387	15,094	15,374	27,271	0	27,529	29,047	28,154	28,761	27,404	22,594	27,774	29,298	220,561
	2.57E+05	4.21E+04	25,526	27,084	26,220	26,801	25,387	15,094	15,374	27,271	0	27,529	29,047	28,154	28,761	27,404	22,594	27,774	29,298	220,561
	2.57E+05	4.21E+04	25,526	27,084	26,220	26,801	25,387	15,094	15,374	27,271	0	27,529	29,047	28,154	28,761	27,404	22,594	27,774	29,298	220,561
	2.57E+05	4.21E+04	25,526	27,084	26,220	26,801	25,387	15,094	15,374	27,271	0	27,529	29,047	28,154	28,761	27,404	22,594	27,774	29,298	220,561
11/00	2.57E+05	4.21E+04	25,526	27,084	26,220	26,801	25,387	15,094	15,374	27,271	0	27,529	29,047	28,154	28,761	27,404	22,594	27,774	29,298	220,561
	2.57E+05	4.21E+04	25,526	27,084	26,220	26,801	25,387	15,094	15,374	27,271	0	27,529	29,047	28,154	28,761	27,404	22,594	27,774	29,298	220,561
	2.57E+05	4.21E+04	25,526	27,084	26,220	26,801	25,387	15,094	15,374	27,271	0	27,529	29,047	28,154	28,761	27,404	22,594	27,774	29,298	220,561
	2.57E+05	4.21E+04	25,526	27,084	26,220	26,801	25,387	15,094	15,374	27,271	0	27,529	29,047	28,154	28,761	27,404	22,594	27,774	29,298	220,561
12/00	2.57E+05	4.21E+04	25,526	27,084	26,220	26,801	25,387	15,094	15,374	27,271	0	27,529	29,047	28,154	28,761	27,404	22,594	27,774	29,298	220,561

	0	1	2	3	4															
	SUPERNATE IN ESTs:					Nitrates in ESTs:					Cesium in ESTs:					SLUDGES IN ESTs:				
DATE	C-1	C-2	W-21	W-22	W-23	C-1	C-2	W-21	W-22	W-23	C-1	C-2	W-21	W-22	W-23	C-1	C-2	W-21	W-22	W-23
1/96	1	24,900	13,750	0	3,300	3.50	3.50	5.00	0.20	3.23	2.00E+06	2.00E+06	3.21E+05	1.00E+05	1.50E+06	1,400	1,700	10,900	6,800	16,400
2/96	1	24,900	14,090	0	3,300	3.50	3.50	4.88	0.20	3.23	2.00E+06	2.00E+06	3.21E+05	1.00E+05	1.50E+06	1,400	1,700	10,900	6,800	16,400
3/96	1,581	24,900	14,930	0	3,300	5.00	3.50	4.60	0.20	3.23	2.00E+06	2.00E+06	3.21E+05	1.00E+05	1.50E+06	1,400	1,700	10,900	6,800	16,400
4/96	1,581	24,900	15,390	0	3,300	5.00	3.50	4.47	0.20	3.23	2.00E+06	2.00E+06	3.21E+05	1.00E+05	1.50E+06	1,400	1,700	10,900	6,800	16,400
5/96	1,581	24,900	15,680	0	3,300	5.00	3.50	4.38	0.20	3.23	2.00E+06	2.00E+06	3.21E+05	1.00E+05	1.50E+06	1,400	1,700	10,900	6,800	16,400
6/96	1,581	24,900	16,200	0	3,300	5.00	3.50	4.24	0.20	3.23	2.00E+06	2.00E+06	3.21E+05	1.00E+05	1.50E+06	1,400	1,700	10,900	6,800	16,400
7/96	1,581	24,900	16,580	0	3,300	5.00	3.50	4.15	0.20	3.23	2.00E+06	2.00E+06	3.21E+05	1.00E+05	1.50E+06	1,400	1,700	10,900	6,800	16,400
8/96	1,581	24,900	16,823	0	3,300	5.00	3.50	4.09	0.20	3.23	2.00E+06	2.00E+06	3.21E+05	1.00E+05	1.50E+06	1,400	1,700	10,900	6,800	16,400
9/96	3,760	24,900	17,153	0	3,300	5.00	3.50	4.01	0.20	3.23	2.00E+06	2.00E+06	3.21E+05	1.00E+05	1.50E+06	1,400	1,700	10,900	6,800	16,400
10/96	3,760	24,900	17,553	0	3,300	5.00	3.50	3.92	0.20	3.23	2.00E+06	2.00E+06	3.21E+05	1.00E+05	1.50E+06	1,400	1,700	10,900	6,800	16,400
11/96	3,760	24,900	17,953	0	3,300	5.00	3.50	3.83	0.20	3.23	2.00E+06	2.00E+06	3.21E+05	1.00E+05	1.50E+06	1,400	1,700	10,900	6,800	16,400
12/96	5,760	24,900	18,353	0	3,300	5.00	3.50	3.75	0.20	3.23	2.00E+06	2.00E+06	3.21E+05	1.00E+05	1.50E+06	1,400	1,700	10,900	6,800	16,400
1/97	5,760	24,900	18,753	0	3,300	5.00	3.50	3.67	0.20	3.23	2.00E+06	2.00E+06	3.21E+05	1.00E+05	1.50E+06	1,400	1,700	10,900	6,800	16,400
2/97	5,760	24,900	19,153	0	3,300	5.00	3.50	3.59	0.20	3.23	2.00E+06	2.00E+06	3.21E+05	1.00E+05	1.50E+06	1,400	1,700	10,900	6,800	16,400
3/97	7,760	24,900	19,553	0	3,300	5.00	3.50	3.52	0.20	3.23	2.00E+06	2.00E+06	3.21E+05	1.00E+05	1.50E+06	1,400	1,700	10,900	6,800	16,400
4/97	7,760	24,900	19,953	0	3,300	5.00	3.50	3.45	0.20	3.23	2.00E+06	2.00E+06	3.21E+05	1.00E+05	1.50E+06	1,400	1,700	10,900	6,800	16,400
5/97	7,760	24,900	20,353	0	3,300	5.00	3.50	3.38	0.20	3.23	2.00E+06	2.00E+06	3.21E+05	1.00E+05	1.50E+06	1,400	1,700	10,900	6,800	16,400
6/97	9,760	24,900	20,753	0	3,300	5.00	3.50	3.31	0.20	3.23	2.00E+06	2.00E+06	3.21E+05	1.00E+05	1.50E+06	1,400	1,700	10,900	6,800	16,400
7/97	9,760	24,900	21,153	0	3,300	5.00	3.50	3.25	0.20	3.23	2.00E+06	2.00E+06	3.21E+05	1.00E+05	1.50E+06	1,400	1,700	10,900	6,800	16,400
	9,760	24,900	35,153	0	3,300	5.00	3.50	4.68	0.20	3.23	2.00E+06	2.00E+06	4.40E+05	1.00E+05	1.50E+06	1,400	1,700	10,938	6,800	16,400
	30,760	24,900	35,153	0	3,300	6.26	3.50	4.68	0.20	3.23	1.06E+06	2.00E+06	4.40E+05	1.00E+05	1.50E+06	1,438	1,700	10,938	6,800	16,400
8/97	30,760	24,900	35,553	0	3,300	6.26	3.50	4.63	0.20	3.23	1.06E+06	2.00E+06	4.39E+05	1.00E+05	1.50E+06	1,438	1,700	10,938	6,800	16,400
	30,760	24,900	35,553	0	3,300	6.26	3.50	4.63	0.20	3.23	1.06E+06	2.00E+06	4.39E+05	1.00E+05	1.50E+06	1,438	1,700	10,938	6,800	16,400
	30,760	24,900	35,553	0	3,300	6.26	3.50	4.63	0.20	3.23	1.06E+06	2.00E+06	4.39E+05	1.00E+05	1.50E+06	1,438	1,700	10,938	6,800	16,400
9/97	33,160	24,900	2,228	0	3,300	6.17	3.50	4.63	0.20	3.23	1.13E+06	2.00E+06	4.39E+05	1.00E+05	1.50E+06	1,438	1,700	5,141	6,800	16,400
	33,160	24,900	2,228	0	3,300	6.17	3.50	4.63	0.20	3.23	1.13E+06	2.00E+06	4.39E+05	1.00E+05	1.50E+06	1,438	1,700	5,141	6,800	16,400
	6,160	24,900	29,228	0	3,300	6.17	3.50	6.05	0.20	3.23	1.13E+06	2.00E+06	1.07E+06	1.00E+05	1.50E+06	1,422	1,700	5,157	6,800	16,400
	6,160	24,900	24,197	0	3,300	6.17	3.50	6.05	0.20	3.23	1.13E+06	2.00E+06	1.07E+06	1.00E+05	1.50E+06	1,422	1,700	4,282	6,800	16,400
	6,160	24,900	24,197	0	3,300	6.17	3.50	6.05	0.20	3.23	1.13E+06	2.00E+06	1.07E+06	1.00E+05	1.50E+06	1,422	1,700	4,282	6,800	16,400
	6,160	24,900	16,023	0	3,300	6.17	3.50	6.05	0.20	3.23	1.13E+06	2.00E+06	1.07E+06	1.00E+05	1.50E+06	1,422	1,700	2,860	6,800	16,400
	6,160	24,900	16,023	0	3,300	6.17	3.50	6.05	0.20	3.23	1.13E+06	2.00E+06	1.07E+06	1.00E+05	1.50E+06	1,422	1,700	2,860	6,800	16,400
	6,160	24,900	2,819	0	3,300	6.17	3.50	6.05	0.20	3.23	1.13E+06	2.00E+06	1.07E+06	1.00E+05	1.50E+06	1,422	1,700	563	6,800	16,400
	6,160	24,900	2,819	0	3,300	6.17	3.50	6.05	0.20	3.23	1.13E+06	2.00E+06	1.07E+06	1.00E+05	1.50E+06	1,422	1,700	563	6,800	16,400
	6,160	24,900	0	0	3,300	6.17	3.50	0.00	0.20	3.23	1.13E+06	2.00E+06	0.00E+00	1.00E+05	1.50E+06	1,422	1,700	0	6,800	16,400
	6,160	24,900	0	0	3,300	6.17	3.50	0.00	0.20	3.23	1.13E+06	2.00E+06	0.00E+00	1.00E+05	1.50E+06	1,422	1,700	0	6,800	16,400
10/97	8,560	24,900	0	0	3,300	6.10	3.50	0.00	0.20	3.23	1.18E+06	2.00E+06	0.00E+00	1.00E+05	1.50E+06	1,422	1,700	0	6,800	16,400
11/97	6,960	24,900	0	0	3,300	6.04	3.50	0.00	0.20	3.23	1.23E+06	2.00E+06	0.00E+00	1.00E+05	1.50E+06	1,422	1,700	0	6,800	16,400
12/97	8,360	24,900	0	0	3,300	5.77	3.50	0.00	0.20	3.23	1.42E+06	2.00E+06	0.00E+00	1.00E+05	1.50E+06	1,422	1,700	0	6,800	16,400
1/98	9,760	24,900	0	0	24,300	5.74	3.50	0.00	0.20	7.28	1.45E+06	2.00E+06	0.00E+00	1.00E+05	1.16E+06	1,422	1,700	0	6,800	16,400
	9,760	24,900	0	0	24,300	5.74	3.50	0.00	0.20	7.28	1.45E+06	2.00E+06	0.00E+00	1.00E+05	1.16E+06	1,422	1,700	0	6,800	16,400
	9,760	24,900	0	0	24,300	5.74	3.50	0.00	0.20	7.28	1.45E+06	2.00E+06	0.00E+00	1.00E+05	1.16E+06	1,422	1,700	0	6,800	16,400
	9,760	24,900	0	0	24,300	5.74	3.50	0.00	0.20	7.28	1.45E+06	2.00E+06	0.00E+00	1.00E+05	1.16E+06	1,422	1,700	0	6,800	16,400
2/98	10,160	24,900	0	0	24,300	5.71	3.50	0.00	0.20	7.28	1.47E+06	2.00E+06	0.00E+00	1.00E+05	1.16E+06	1,422	1,700	0	6,800	16,400
3/98	12,560	24,900	0	0	24,300	5.57	3.50	0.00	0.20	7.28	1.57E+06	2.00E+06	0.00E+00	1.00E+05	1.16E+06	1,422	1,700	0	6,800	16,400
	12,560	24,900	0	0	24,300	5.57	3.50	0.00	0.20	7.28	1.57E+06	2.00E+06	0.00E+00	1.00E+05	1.16E+06	1,422	1,700	0	6,800	16,400
	12,560	24,900	0	0	24,300	5.57	3.50	0.00	0.20	7.28	1.57E+06	2.00E+06	0.00E+00	1.00E+05	1.16E+06	1,422	1,700	0	6,800	16,400
	12,560	24,900	0	0	24,300	5.57	3.50	0.00	0.20	7.28	1.57E+06	2.00E+06	0.00E+00	1.00E+05	1.16E+06	1,422	1,700	0	6,800	16,400
	12,560	24,900	0	0	24,300	5.57	3.50	0.00	0.20	7.28	1.57E+06	2.00E+06	0.00E+00	1.00E+05	1.16E+06	1,422	1,700	0	6,800	16,400
4/98	12,960	24,900	0	0	24,300	5.56	3.50	0.00	0.20	7.28	1.58E+06	2.00E+06	0.00E+00	1.00E+05	1.16E+06	1,422	1,700	0	6,800	16,400
	12,960	24,900	0	0	24,300	5.56	3.50	0.00	0.20	7.28	1.58E+06	2.00E+06	0.00E+00	1.00E+05	1.16E+06	1,422	1,700	0	6,800	16,400
	12,960	24,900	0	0	24,300	5.56	3.50	0.00	0.20	7.28	1.58E+06	2.00E+06	0.00E+00	1.00E+05	1.16E+06	1,422	1,700	0	6,800	16,400
	12,960	24,900	0	0	24,300	5.56	3.50	0.00	0.20	7.28	1.58E+06	2.00E+06	0.00E+00	1.00E+05	1.16E+06	1,422	1,700	0	6,800	16,400
	12,960	24,900	0	0	24,300	5.56	3.50	0.00	0.20	7.28	1.58E+06	2.00E+06	0.00E+00	1.00E+05	1.16E+06	1,422	1,700	0	6,800	16,400
	12,960	24,900	0	0	24,300	5.56	3.50	0.00	0.20	7.28	1.58E+06	2.00E+06	0.00E+00	1.00E+05	1.16E+06	1,422	1,700	0	6,800	16,400
5/98	13,360	24,900	0	0	24,300	5.54	3.50	0.00	0.20	7.28	1.60E+06	2.00E+06	0.00E+00	1.00E+05	1.16E+06	1,422	1,700	0	6,800	16,400
	13,360	24,900	0	0	24,300	5.54	3.50	0.00	0.20	7.28	1.60E+06	2.00E+06	0.00E+00	1.00E+05	1.16E+06	1,422	1,700	0	6,800	16,400
6/98	15,760	24,900	0	0	24,300	5.46	3.50	0.00	0.20	7.28	1.66E+06	2.00E+06	0.00E+00	1.00E+05	1.16E+06	1,422	1,700	0	6,800	16,400
	28,233	24,900	0	0	24,300	5.26	3.50	0.00	0.20	7.28	1.12E+06	2.00E+06	0.00E+00	1.00E+05	1.16E+06	1,422	1,700	0	6,800	16,400

	0	1	2	3	4															
	SUPERNATE IN ESTs:					Nitrates in ESTs:					Cesium in ESTs:					SLUDGES IN ESTs:				
DATE	C-1	C-2	W-21	W-22	W-23	C-1	C-2	W-21	W-22	W-23	C-1	C-2	W-21	W-22	W-23	C-1	C-2	W-21	W-22	W-23
	28,233	24,900	0	0	24,300	5.26	3.50	0.00	0.20	7.28	1.12E+06	2.00E+06	0.00E+00	1.00E+05	1.16E+06	1,422	1,700	0	6,800	16,400
7/98	28,633	44,900	0	0	24,300	5.25	2.96	0.00	0.20	7.28	1.14E+06	1.22E+06	0.00E+00	1.00E+05	1.16E+06	1,422	1,994	0	6,800	16,400
	28,633	44,900	0	0	24,300	5.25	2.96	0.00	0.20	7.28	1.14E+06	1.22E+06	0.00E+00	1.00E+05	1.16E+06	1,422	1,994	0	6,800	16,400
	28,633	44,900	0	0	2,396	5.25	2.96	0.00	0.20	7.28	1.14E+06	1.22E+06	0.00E+00	1.00E+05	1.16E+06	1,422	1,994	0	6,800	13,120
	28,633	44,900	0	0	2,396	5.25	2.96	0.00	0.20	7.28	1.14E+06	1.22E+06	0.00E+00	1.00E+05	1.16E+06	1,422	1,994	0	6,800	13,120
8/98	5,033	44,900	0	0	26,396	5.25	2.96	0.00	0.20	5.44	1.15E+06	1.22E+06	0.00E+00	1.00E+05	1.14E+06	1,407	1,994	0	6,800	13,135
	5,033	44,900	0	0	20,920	5.25	2.96	0.00	0.20	5.44	1.15E+06	1.22E+06	0.00E+00	1.00E+05	1.14E+06	1,407	1,994	0	6,800	12,315
	5,033	44,900	0	0	20,920	5.25	2.96	0.00	0.20	5.44	1.15E+06	1.22E+06	0.00E+00	1.00E+05	1.14E+06	1,407	1,994	0	6,800	12,315
	5,033	28,900	0	0	36,920	5.25	2.96	0.00	0.20	4.36	1.15E+06	1.22E+06	0.00E+00	1.00E+05	1.17E+06	1,407	1,962	0	6,800	12,347
	5,033	28,900	0	0	18,302	5.25	2.96	0.00	0.20	4.36	1.15E+06	1.22E+06	0.00E+00	1.00E+05	1.17E+06	1,407	1,962	0	6,800	9,559
	5,033	28,900	0	0	18,302	5.25	2.96	0.00	0.20	4.36	1.15E+06	1.22E+06	0.00E+00	1.00E+05	1.17E+06	1,407	1,962	0	6,800	9,559
	5,033	8,900	0	0	38,302	5.25	2.96	0.00	0.20	3.63	1.15E+06	1.22E+06	0.00E+00	1.00E+05	1.20E+06	1,407	1,932	0	6,800	9,589
	5,033	8,900	0	0	18,588	5.25	2.96	0.00	0.20	3.63	1.15E+06	1.22E+06	0.00E+00	1.00E+05	1.20E+06	1,407	1,932	0	6,800	6,637
	5,033	8,900	0	0	18,588	5.25	2.96	0.00	0.20	3.63	1.15E+06	1.22E+06	0.00E+00	1.00E+05	1.20E+06	1,407	1,932	0	6,800	6,637
	5,033	8,900	0	0	41,588	5.25	2.96	0.00	0.20	4.31	1.15E+06	1.22E+06	0.00E+00	1.00E+05	1.25E+06	1,407	1,932	0	6,800	6,832
9/98	5,033	8,900	0	0	43,988	5.25	2.96	0.00	0.20	4.08	1.15E+06	1.22E+06	0.00E+00	1.00E+05	1.29E+06	1,407	1,932	0	6,800	6,832
	5,033	8,900	0	0	43,988	5.25	2.96	0.00	0.20	4.08	1.15E+06	1.22E+06	0.00E+00	1.00E+05	1.29E+06	1,407	1,932	0	6,800	6,832
	5,033	8,900	0	0	43,988	5.25	2.96	0.00	0.20	4.08	1.15E+06	1.22E+06	0.00E+00	1.00E+05	1.29E+06	1,407	1,932	0	6,800	6,832
	5,033	8,900	0	0	18,799	5.25	2.96	0.00	0.20	4.08	1.15E+06	1.22E+06	0.00E+00	1.00E+05	1.29E+06	1,407	1,932	0	6,800	3,060
	5,033	8,900	0	0	18,799	5.25	2.96	0.00	0.20	4.08	1.15E+06	1.22E+06	0.00E+00	1.00E+05	1.29E+06	1,407	1,932	0	6,800	3,060
	5,033	8,900	0	0	0	5.25	2.96	0.00	0.20	0.00	1.15E+06	1.22E+06	0.00E+00	1.00E+05	0.00E+00	1,407	1,932	0	6,800	0
	5,033	8,900	0	0	0	5.25	2.96	0.00	0.20	0.00	1.15E+06	1.22E+06	0.00E+00	1.00E+05	0.00E+00	1,407	1,932	0	6,800	0
10/98	5,033	9,300	0	0	0	5.25	3.05	0.00	0.20	0.00	1.15E+06	1.22E+06	0.00E+00	1.00E+05	0.00E+00	1,407	1,932	0	6,800	0
	5,033	9,300	0	0	0	5.25	3.05	0.00	0.20	0.00	1.15E+06	1.22E+06	0.00E+00	1.00E+05	0.00E+00	1,407	1,932	0	6,800	0
	5,033	9,300	0	0	0	5.25	3.05	0.00	0.20	0.00	1.15E+06	1.22E+06	0.00E+00	1.00E+05	0.00E+00	1,407	1,932	0	6,800	0
	5,033	9,300	0	0	0	5.25	3.05	0.00	0.20	0.00	1.15E+06	1.22E+06	0.00E+00	1.00E+05	0.00E+00	1,407	1,932	0	6,800	0
	5,033	10,407	0	0	0	5.25	3.26	0.00	0.20	0.00	1.15E+06	1.18E+06	0.00E+00	1.00E+05	0.00E+00	1,407	1,932	0	6,800	0
11/98	5,033	10,807	0	0	0	5.25	3.32	0.00	0.00	0.00	1.15E+06	1.18E+06	0.00E+00	0.00E+00	0.00E+00	1,407	1,932	0	0	0
	5,033	10,807	0	0	0	5.25	3.32	0.00	0.00	0.00	1.15E+06	1.18E+06	0.00E+00	0.00E+00	0.00E+00	1,407	1,932	0	0	0
	5,033	10,807	0	0	0	5.25	3.32	0.00	0.00	0.00	1.15E+06	1.18E+06	0.00E+00	0.00E+00	0.00E+00	1,407	1,932	0	0	0
	5,033	10,807	0	0	0	5.25	3.32	0.00	0.00	0.00	1.15E+06	1.18E+06	0.00E+00	0.00E+00	0.00E+00	1,407	1,932	0	0	0
	5,033	10,807	0	0	0	5.25	3.32	0.00	0.00	0.00	1.15E+06	1.18E+06	0.00E+00	0.00E+00	0.00E+00	1,407	1,932	0	0	0
12/98	5,033	13,207	0	0	0	5.25	3.63	0.00	0.00	0.00	1.15E+06	1.21E+06	0.00E+00	0.00E+00	0.00E+00	1,407	1,932	0	0	0
	5,033	13,207	0	0	0	5.25	3.63	0.00	0.00	0.00	1.15E+06	1.21E+06	0.00E+00	0.00E+00	0.00E+00	1,407	1,932	0	0	0
	5,033	13,207	0	0	0	5.25	3.63	0.00	0.00	0.00	1.15E+06	1.21E+06	0.00E+00	0.00E+00	0.00E+00	1,407	1,932	0	0	0
	5,033	13,207	0	0	0	5.25	3.63	0.00	0.00	0.00	1.15E+06	1.21E+06	0.00E+00	0.00E+00	0.00E+00	1,407	1,932	0	0	0
	5,033	15,131	0	0	0	5.25	3.80	0.00	0.00	0.00	1.15E+06	1.15E+06	0.00E+00	0.00E+00	0.00E+00	1,407	1,932	0	0	0
	5,033	26,656	0	0	0	5.25	4.32	0.00	0.00	0.00	1.15E+06	1.29E+06	0.00E+00	0.00E+00	0.00E+00	1,407	1,932	0	0	0
	5,033	26,656	0	0	0	5.25	4.32	0.00	0.00	0.00	1.15E+06	1.29E+06	0.00E+00	0.00E+00	0.00E+00	1,407	1,932	0	0	0
	5,033	26,656	0	0	0	5.25	4.32	0.00	0.00	0.00	1.15E+06	1.29E+06	0.00E+00	0.00E+00	0.00E+00	1,407	1,932	0	0	0
1/99	5,033	27,056	0	0	0	5.25	4.33	0.00	0.00	0.00	1.15E+06	1.29E+06	0.00E+00	0.00E+00	0.00E+00	1,407	1,932	0	0	0
	5,033	27,056	0	0	0	5.25	4.33	0.00	0.00	0.00	1.15E+06	1.29E+06	0.00E+00	0.00E+00	0.00E+00	1,407	1,932	0	0	0
	5,033	27,056	0	0	0	5.25	4.33	0.00	0.00	0.00	1.15E+06	1.29E+06	0.00E+00	0.00E+00	0.00E+00	1,407	1,932	0	0	0
	6,695	27,056	0	0	0	5.19	4.33	0.00	0.00	0.00	1.06E+06	1.29E+06	0.00E+00	0.00E+00	0.00E+00	1,407	1,932	0	0	0
	6,695	27,056	0	0	0	5.19	4.33	0.00	0.00	0.00	1.06E+06	1.29E+06	0.00E+00	0.00E+00	0.00E+00	1,407	1,932	0	0	0
	6,695	27,056	0	0	0	5.19	4.33	0.00	0.00	0.00	1.06E+06	1.29E+06	0.00E+00	0.00E+00	0.00E+00	1,407	1,932	0	0	0
2/99	13,366	27,056	0	0	0	5.09	4.33	0.00	0.00	0.00	9.13E+05	1.29E+06	0.00E+00	0.00E+00	0.00E+00	1,407	1,932	0	0	0
	13,366	27,056	0	0	0	5.09	4.33	0.00	0.00	0.00	9.13E+05	1.29E+06	0.00E+00	0.00E+00	0.00E+00	1,407	1,932	0	0	0
	13,366	27,056	0	0	0	5.09	4.33	0.00	0.00	0.00	9.13E+05	1.29E+06	0.00E+00	0.00E+00	0.00E+00	1,407	1,932	0	0	0
	13,366	27,056	0	0	0	5.09	4.33	0.00	0.00	0.00	9.13E+05	1.29E+06	0.00E+00	0.00E+00	0.00E+00	1,407	1,932	0	0	0
3/99	15,766	27,056	0	0	0	5.08	4.33	0.00	0.00	0.00	1.08E+06	1.29E+06	0.00E+00	0.00E+00	0.00E+00	1,407	1,932	0	0	0
	15,766	27,056	0	0	0	5.08	4.33	0.00	0.00	0.00	1.08E+06	1.29E+06	0.00E+00	0.00E+00	0.00E+00	1,407	1,932	0	0	0
	15,766	27,056	0	0	0	5.08	4.33	0.00	0.00	0.00	1.08E+06	1.29E+06	0.00E+00	0.00E+00	0.00E+00	1,407	1,932	0	0	0
	15,766	27,056	0	0	0	5.08	4.33	0.00	0.00	0.00	1.08E+06	1.29E+06	0.00E+00	0.00E+00	0.00E+00	1,407	1,932	0	0	0
	15,766	27,056	0	0	0	5.08	4.33	0.00	0.00	0.00	1.08E+06	1.29E+06	0.00E+00	0.00E+00	0.00E+00	1,407	1,932	0	0	0
4/99	16,166	27,056	0	0	0	5.08	4.33	0.00	0.00	0.00	1.10E+06	1.29E+06	0.00E+00	0.00E+00	0.00E+00	1,407	1,932	0	0	0
	16,166	27,056	0	0	0	5.08	4.33	0.00	0.00	0.00	1.10E+06	1.29E+06	0.00E+00	0.00E+00	0.00E+00	1,407	1,932	0	0	0
	16,166	27,056	0	0	0	5.08	4.33	0.00	0.00	0.00	1.10E+06	1.29E+06	0.00E+00	0.00E+00	0.00E+00	1,407	1,932	0	0	0

DATE	0 SUPERNATE IN ESTs: C-1	1 C-2	2 W-21	3 W-22	4 W-23	Nitrates in ESTs: C-1	C-2	W-21	W-22	W-23	Cesium in ESTs: C-1	C-2	W-21	W-22	W-23	SLUDGES IN ESTs: C-1	C-2	W-21	W-22	W-23
	0	27,056	0	0	0	0.00	4.33	0.00	0.00	0.00	0.00E+00	1.29E+06	0.00E+00	0.00E+00	0.00E+00	0	1,932	0	0	0
	0	27,056	0	0	0	0.00	4.33	0.00	0.00	0.00	0.00E+00	1.29E+06	0.00E+00	0.00E+00	0.00E+00	0	1,932	0	0	0
5/99	0	18,939	0	0	0	0.00	4.33	0.00	0.00	0.00	0.00E+00	1.29E+06	0.00E+00	0.00E+00	0.00E+00	0	1,352	0	0	0
	0	18,939	0	0	0	0.00	4.33	0.00	0.00	0.00	0.00E+00	1.29E+06	0.00E+00	0.00E+00	0.00E+00	0	1,352	0	0	0
	0	0	0	0	0	0.00	0.00	0.00	0.00	0.00	0.00E+00	0.00E+00	0.00E+00	0.00E+00	0.00E+00	0	0	0	0	0
	0	0	0	0	0	0.00	0.00	0.00	0.00	0.00	0.00E+00	0.00E+00	0.00E+00	0.00E+00	0.00E+00	0	0	0	0	0
6/99	0	0	0	0	0	0.00	0.00	0.00	0.00	0.00	0.00E+00	0.00E+00	0.00E+00	0.00E+00	0.00E+00	0	0	0	0	0
	0	0	0	0	0	0.00	0.00	0.00	0.00	0.00	0.00E+00	0.00E+00	0.00E+00	0.00E+00	0.00E+00	0	0	0	0	0
	0	0	0	0	0	0.00	0.00	0.00	0.00	0.00	0.00E+00	0.00E+00	0.00E+00	0.00E+00	0.00E+00	0	0	0	0	0
	0	0	0	0	0	0.00	0.00	0.00	0.00	0.00	0.00E+00	0.00E+00	0.00E+00	0.00E+00	0.00E+00	0	0	0	0	0
	0	0	0	0	0	0.00	0.00	0.00	0.00	0.00	0.00E+00	0.00E+00	0.00E+00	0.00E+00	0.00E+00	0	0	0	0	0
7/99	0	0	0	0	0	0.00	0.00	0.00	0.00	0.00	0.00E+00	0.00E+00	0.00E+00	0.00E+00	0.00E+00	0	0	0	0	0
	0	0	0	0	0	0.00	0.00	0.00	0.00	0.00	0.00E+00	0.00E+00	0.00E+00	0.00E+00	0.00E+00	0	0	0	0	0
	0	0	0	0	0	0.00	0.00	0.00	0.00	0.00	0.00E+00	0.00E+00	0.00E+00	0.00E+00	0.00E+00	0	0	0	0	0
	0	0	0	0	0	0.00	0.00	0.00	0.00	0.00	0.00E+00	0.00E+00	0.00E+00	0.00E+00	0.00E+00	0	0	0	0	0
	0	0	0	0	0	0.00	0.00	0.00	0.00	0.00	0.00E+00	0.00E+00	0.00E+00	0.00E+00	0.00E+00	0	0	0	0	0
8/99	0	0	0	0	0	0.00	0.00	0.00	0.00	0.00	0.00E+00	0.00E+00	0.00E+00	0.00E+00	0.00E+00	0	0	0	0	0
	0	0	0	0	0	0.00	0.00	0.00	0.00	0.00	0.00E+00	0.00E+00	0.00E+00	0.00E+00	0.00E+00	0	0	0	0	0
	0	0	0	0	0	0.00	0.00	0.00	0.00	0.00	0.00E+00	0.00E+00	0.00E+00	0.00E+00	0.00E+00	0	0	0	0	0
	0	0	0	0	0	0.00	0.00	0.00	0.00	0.00	0.00E+00	0.00E+00	0.00E+00	0.00E+00	0.00E+00	0	0	0	0	0
	0	0	0	0	0	0.00	0.00	0.00	0.00	0.00	0.00E+00	0.00E+00	0.00E+00	0.00E+00	0.00E+00	0	0	0	0	0
9/99	0	0	0	0	34,070	0.00	0.00	0.00	0.00	0.00	0.00E+00	0.00E+00	0.00E+00	0.00E+00	1.60E+04	0	0	0	0	10,400
	0	0	0	0	34,070	0.00	0.00	0.00	0.00	0.00	0.00E+00	0.00E+00	0.00E+00	0.00E+00	1.60E+04	0	0	0	0	10,400
	0	0	0	0	34,070	0.00	0.00	0.00	0.00	0.00	0.00E+00	0.00E+00	0.00E+00	0.00E+00	1.60E+04	0	0	0	0	10,400
	0	0	0	0	34,070	0.00	0.00	0.00	0.00	0.00	0.00E+00	0.00E+00	0.00E+00	0.00E+00	1.60E+04	0	0	0	0	10,400
	0	0	0	0	34,070	0.00	0.00	0.00	0.00	0.00	0.00E+00	0.00E+00	0.00E+00	0.00E+00	1.60E+04	0	0	0	0	10,400
	0	0	0	0	34,070	0.00	0.00	0.00	0.00	0.00	0.00E+00	0.00E+00	0.00E+00	0.00E+00	1.60E+04	0	0	0	0	10,400
10/99	0	0	0	0	34,070	0.00	0.00	0.00	0.00	0.00	0.00E+00	0.00E+00	0.00E+00	0.00E+00	1.60E+04	0	0	0	0	10,400
	0	0	0	0	17,035	0.00	0.00	0.00	0.00	0.00	0.00E+00	0.00E+00	0.00E+00	0.00E+00	1.60E+04	0	0	0	0	5,200
	0	0	0	0	17,035	0.00	0.00	0.00	0.00	0.00	0.00E+00	0.00E+00	0.00E+00	0.00E+00	1.60E+04	0	0	0	0	5,200
	0	0	0	0	0	0.00	0.00	0.00	0.00	0.00	0.00E+00	0.00E+00	0.00E+00	0.00E+00	0.00E+00	0	0	0	0	0
	0	0	0	0	0	0.00	0.00	0.00	0.00	0.00	0.00E+00	0.00E+00	0.00E+00	0.00E+00	0.00E+00	0	0	0	0	0
11/99	0	0	0	0	0	0.00	0.00	0.00	0.00	0.00	0.00E+00	0.00E+00	0.00E+00	0.00E+00	0.00E+00	0	0	0	0	0
	0	0	0	0	0	0.00	0.00	0.00	0.00	0.00	0.00E+00	0.00E+00	0.00E+00	0.00E+00	0.00E+00	0	0	0	0	0
12/99	0	0	0	0	0	0.00	0.00	0.00	0.00	0.00	0.00E+00	0.00E+00	0.00E+00	0.00E+00	0.00E+00	0	0	0	0	0
	0	0	0	0	0	0.00	0.00	0.00	0.00	0.00	0.00E+00	0.00E+00	0.00E+00	0.00E+00	0.00E+00	0	0	0	0	0
	0	0	0	0	0	0.00	0.00	0.00	0.00	0.00	0.00E+00	0.00E+00	0.00E+00	0.00E+00	0.00E+00	0	0	0	0	0
	0	0	0	0	0	0.00	0.00	0.00	0.00	0.00	0.00E+00	0.00E+00	0.00E+00	0.00E+00	0.00E+00	0	0	0	0	0
	0	0	0	0	0	0.00	0.00	0.00	0.00	0.00	0.00E+00	0.00E+00	0.00E+00	0.00E+00	0.00E+00	0	0	0	0	0
1/00	0	0	0	0	0	0.00	0.00	0.00	0.00	0.00	0.00E+00	0.00E+00	0.00E+00	0.00E+00	0.00E+00	0	0	0	0	0
	0	0	0	0	0	0.00	0.00	0.00	0.00	0.00	0.00E+00	0.00E+00	0.00E+00	0.00E+00	0.00E+00	0	0	0	0	0
2/00	0	0	40,267	0	0	0.00	0.00	0.00	0.00	0.00	0.00E+00	0.00E+00	8.10E+03	0.00E+00	0.00E+00	0	0	5,648	0	0
	0	0	40,267	0	40,267	0.00	0.00	0.00	0.00	0.00	0.00E+00	0.00E+00	8.10E+03	0.00E+00	8.10E+03	0	0	5,648	0	5,648
	0	0	20,134	0	40,267	0.00	0.00	0.00	0.00	0.00	0.00E+00	0.00E+00	8.10E+03	0.00E+00	8.10E+03	0	0	2,824	0	5,648
	0	0	20,134	0	40,267	0.00	0.00	0.00	0.00	0.00	0.00E+00	0.00E+00	8.10E+03	0.00E+00	8.10E+03	0	0	2,824	0	5,648
	0	0	0	0	40,267	0.00	0.00	0.00	0.00	0.00	0.00E+00	0.00E+00	0.00E+00	0.00E+00	8.10E+03	0	0	0	0	5,648
	0	0	0	0	40,267	0.00	0.00	0.00	0.00	0.00	0.00E+00	0.00E+00	0.00E+00	0.00E+00	8.10E+03	0	0	0	0	5,648
3/00	0	0	40,267	0	40,267	0.00	0.00	0.00	0.00	0.00	0.00E+00	0.00E+00	8.10E+03	0.00E+00	8.10E+03	0	0	0	0	5,648
	0	0	40,267	0	20,134	0.00	0.00	0.00	0.00	0.00	0.00E+00	0.00E+00	8.10E+03	0.00E+00	8.10E+03	0	0	0	0	2,824
	0	0	40,267	0	20,134	0.00	0.00	0.00	0.00	0.00	0.00E+00	0.00E+00	8.10E+03	0.00E+00	8.10E+03	0	0	0	0	2,824
	0	0	40,267	0	0	0.00	0.00	0.00	0.00	0.00	0.00E+00	0.00E+00	8.10E+03	0.00E+00	0.00E+00	0	0	0	0	0
	0	0	40,267	0	0	0.00	0.00	0.00	0.00	0.00	0.00E+00	0.00E+00	8.10E+03	0.00E+00	0.00E+00	0	0	0	0	0
	0	0	40,267	0	0	0.00	0.00	0.00	0.00	0.00	0.00E+00	0.00E+00	8.10E+03	0.00E+00	0.00E+00	0	0	0	0	0
	0	0	40,267	0	0	0.00	0.00	0.00	0.00	0.00	0.00E+00	0.00E+00	8.10E+03	0.00E+00	0.00E+00	0	0	0	0	0
4/00	0	0	40,267	0	40,267	0.00	0.00	0.00	0.00	0.00	0.00E+00	0.00E+00	8.10E+03	0.00E+00	8.10E+03	0	0	0	0	5,648
	0	0	40,267	0	40,267	0.00	0.00	0.00	0.00	0.00	0.00E+00	0.00E+00	8.10E+03	0.00E+00	8.10E+03	0	0	0	0	5,648
	0	0	20,134	0	40,267	0.00	0.00	0.00	0.00	0.00	0.00E+00	0.00E+00	8.10E+03	0.00E+00	8.10E+03	0	0	0	0	5,648

DATE	0 1 2 3 4 SUPERNATE IN ESTs:					Nitrates in ESTs:					Cesium in ESTs:					SLUDGES IN ESTs:				
	C-1	C-2	W-21	W-22	W-23	C-1	C-2	W-21	W-22	W-23	C-1	C-2	W-21	W-22	W-23	C-1	C-2	W-21	W-22	W-23
	0	0	20,134	0	40,267	0.00	0.00	0.00	0.00	0.00	0.00E+00	0.00E+00	8.10E+03	0.00E+00	8.10E+03	0	0	0	0	5,648
	0	0	0	0	40,267	0.00	0.00	0.00	0.00	0.00	0.00E+00	0.00E+00	0.00E+00	0.00E+00	8.10E+03	0	0	0	0	5,648
	0	0	0	0	40,267	0.00	0.00	0.00	0.00	0.00	0.00E+00	0.00E+00	0.00E+00	0.00E+00	8.10E+03	0	0	0	0	5,648
5/00	0	0	40,267	0	40,267	0.00	0.00	0.00	0.00	0.00	0.00E+00	0.00E+00	8.10E+03	0.00E+00	8.10E+03	0	0	5,648	0	5,648
	0	0	40,267	0	24,160	0.00	0.00	0.00	0.00	0.00	0.00E+00	0.00E+00	8.10E+03	0.00E+00	8.10E+03	0	0	5,648	0	3,389
	0	0	40,267	0	24,160	0.00	0.00	0.00	0.00	0.00	0.00E+00	0.00E+00	8.10E+03	0.00E+00	8.10E+03	0	0	5,648	0	3,389
	0	0	40,267	0	4,832	0.00	0.00	0.00	0.00	0.00	0.00E+00	0.00E+00	8.10E+03	0.00E+00	8.10E+03	0	0	5,648	0	678
	0	0	40,267	0	4,832	0.00	0.00	0.00	0.00	0.00	0.00E+00	0.00E+00	8.10E+03	0.00E+00	8.10E+03	0	0	5,648	0	678
	0	0	40,267	0	4,832	0.00	0.00	0.00	0.00	0.00	0.00E+00	0.00E+00	8.10E+03	0.00E+00	8.10E+03	0	0	5,648	0	678
	0	0	40,267	0	4,832	0.00	0.00	0.00	0.00	0.00	0.00E+00	0.00E+00	8.10E+03	0.00E+00	8.10E+03	0	0	5,648	0	678
6/00	0	0	40,267	0	45,100	0.00	0.00	0.00	0.00	0.00	0.00E+00	0.00E+00	8.10E+03	0.00E+00	8.10E+03	0	0	5,648	0	7,885
	0	0	20,134	0	45,100	0.00	0.00	0.00	0.00	0.00	0.00E+00	0.00E+00	8.10E+03	0.00E+00	8.10E+03	0	0	2,824	0	7,885
	0	0	20,134	0	45,100	0.00	0.00	0.00	0.00	0.00	0.00E+00	0.00E+00	8.10E+03	0.00E+00	8.10E+03	0	0	2,824	0	7,885
	0	0	8,053	0	45,100	0.00	0.00	0.00	0.00	0.00	0.00E+00	0.00E+00	8.10E+03	0.00E+00	8.10E+03	0	0	1,130	0	7,885
	0	0	8,053	0	45,100	0.00	0.00	0.00	0.00	0.00	0.00E+00	0.00E+00	8.10E+03	0.00E+00	8.10E+03	0	0	1,130	0	7,885
	0	0	8,053	0	45,100	0.00	0.00	0.00	0.00	0.00	0.00E+00	0.00E+00	8.10E+03	0.00E+00	8.10E+03	0	0	1,130	0	7,885
	0	0	8,053	0	45,100	0.00	0.00	0.00	0.00	0.00	0.00E+00	0.00E+00	8.10E+03	0.00E+00	8.10E+03	0	0	1,130	0	7,885
	0	0	8,053	0	45,100	0.00	0.00	0.00	0.00	0.00	0.00E+00	0.00E+00	8.10E+03	0.00E+00	8.10E+03	0	0	1,130	0	7,885
7/00	0	0	8,053	0	27,060	0.00	0.00	0.00	0.00	0.00	0.00E+00	0.00E+00	8.10E+03	0.00E+00	8.10E+03	0	0	1,130	0	4,731
	0	0	8,053	0	27,060	0.00	0.00	0.00	0.00	0.00	0.00E+00	0.00E+00	8.10E+03	0.00E+00	8.10E+03	0	0	1,130	0	4,731
	0	0	8,053	0	10,824	0.00	0.00	0.00	0.00	0.00	0.00E+00	0.00E+00	8.10E+03	0.00E+00	8.10E+03	0	0	1,130	0	1,892
	0	0	8,053	0	10,824	0.00	0.00	0.00	0.00	0.00	0.00E+00	0.00E+00	8.10E+03	0.00E+00	8.10E+03	0	0	1,130	0	1,892
	0	0	8,053	0	0	0.00	0.00	0.00	0.00	0.00	0.00E+00	0.00E+00	8.10E+03	0.00E+00	0.00E+00	0	0	1,130	0	0
	0	0	8,053	0	0	0.00	0.00	0.00	0.00	0.00	0.00E+00	0.00E+00	8.10E+03	0.00E+00	0.00E+00	0	0	1,130	0	0
	0	0	34,898	0	0	0.00	0.00	0.00	0.00	0.00	0.00E+00	0.00E+00	8.10E+03	0.00E+00	0.00E+00	0	0	4,895	0	0
	0	0	20,939	0	0	0.00	0.00	0.00	0.00	0.00	0.00E+00	0.00E+00	8.10E+03	0.00E+00	0.00E+00	0	0	2,937	0	0
	0	0	20,939	0	0	0.00	0.00	0.00	0.00	0.00	0.00E+00	0.00E+00	8.10E+03	0.00E+00	0.00E+00	0	0	2,937	0	0
	0	0	20,939	0	0	0.00	0.00	0.00	0.00	0.00	0.00E+00	0.00E+00	8.10E+03	0.00E+00	0.00E+00	0	0	2,937	0	0
	0	0	20,939	0	0	0.00	0.00	0.00	0.00	0.00	0.00E+00	0.00E+00	8.10E+03	0.00E+00	0.00E+00	0	0	2,937	0	0
8/00	0	0	20,939	0	0	0.00	0.00	0.00	0.00	0.00	0.00E+00	0.00E+00	8.10E+03	0.00E+00	0.00E+00	0	0	2,937	0	0
	0	0	20,939	0	0	0.00	0.00	0.00	0.00	0.00	0.00E+00	0.00E+00	8.10E+03	0.00E+00	0.00E+00	0	0	2,937	0	0
	0	0	20,939	0	0	0.00	0.00	0.00	0.00	0.00	0.00E+00	0.00E+00	8.10E+03	0.00E+00	0.00E+00	0	0	2,937	0	0
	0	0	6,282	0	0	0.00	0.00	0.00	0.00	0.00	0.00E+00	0.00E+00	8.10E+03	0.00E+00	0.00E+00	0	0	881	0	0
	0	0	6,282	0	0	0.00	0.00	0.00	0.00	0.00	0.00E+00	0.00E+00	8.10E+03	0.00E+00	0.00E+00	0	0	881	0	0
	0	0	0	0	0	0.00	0.00	0.00	0.00	0.00	0.00E+00	0.00E+00	0.00E+00	0.00E+00	0.00E+00	0	0	0	0	0
	0	0	0	0	0	0.00	0.00	0.00	0.00	0.00	0.00E+00	0.00E+00	0.00E+00	0.00E+00	0.00E+00	0	0	0	0	0
9/00	0	0	0	0	0	0.00	0.00	0.00	0.00	0.00	0.00E+00	0.00E+00	0.00E+00	0.00E+00	0.00E+00	0	0	0	0	0
	0	0	0	0	0	0.00	0.00	0.00	0.00	0.00	0.00E+00	0.00E+00	0.00E+00	0.00E+00	0.00E+00	0	0	0	0	0
	0	0	0	0	0	0.00	0.00	0.00	0.00	0.00	0.00E+00	0.00E+00	0.00E+00	0.00E+00	0.00E+00	0	0	0	0	0
	0	0	0	0	0	0.00	0.00	0.00	0.00	0.00	0.00E+00	0.00E+00	0.00E+00	0.00E+00	0.00E+00	0	0	0	0	0
	0	0	0	0	0	0.00	0.00	0.00	0.00	0.00	0.00E+00	0.00E+00	0.00E+00	0.00E+00	0.00E+00	0	0	0	0	0
	0	0	0	0	0	0.00	0.00	0.00	0.00	0.00	0.00E+00	0.00E+00	0.00E+00	0.00E+00	0.00E+00	0	0	0	0	0
	0	0	0	0	0	0.00	0.00	0.00	0.00	0.00	0.00E+00	0.00E+00	0.00E+00	0.00E+00	0.00E+00	0	0	0	0	0
10/00	0	0	0	0	0	0.00	0.00	0.00	0.00	0.00	0.00E+00	0.00E+00	0.00E+00	0.00E+00	0.00E+00	0	0	0	0	0
	0	0	0	0	0	0.00	0.00	0.00	0.00	0.00	0.00E+00	0.00E+00	0.00E+00	0.00E+00	0.00E+00	0	0	0	0	0
	0	0	0	0	0	0.00	0.00	0.00	0.00	0.00	0.00E+00	0.00E+00	0.00E+00	0.00E+00	0.00E+00	0	0	0	0	0
	0	0	0	0	0	0.00	0.00	0.00	0.00	0.00	0.00E+00	0.00E+00	0.00E+00	0.00E+00	0.00E+00	0	0	0	0	0
	0	0	0	0	0	0.00	0.00	0.00	0.00	0.00	0.00E+00	0.00E+00	0.00E+00	0.00E+00	0.00E+00	0	0	0	0	0
	0	0	0	0	0	0.00	0.00	0.00	0.00	0.00	0.00E+00	0.00E+00	0.00E+00	0.00E+00	0.00E+00	0	0	0	0	0
11/00	0	0	0	0	0	0.00	0.00	0.00	0.00	0.00	0.00E+00	0.00E+00	0.00E+00	0.00E+00	0.00E+00	0	0	0	0	0
	0	0	0	0	0	0.00	0.00	0.00	0.00	0.00	0.00E+00	0.00E+00	0.00E+00	0.00E+00	0.00E+00	0	0	0	0	0
	0	0	0	0	0	0.00	0.00	0.00	0.00	0.00	0.00E+00	0.00E+00	0.00E+00	0.00E+00	0.00E+00	0	0	0	0	0
	0	0	0	0	0	0.00	0.00	0.00	0.00	0.00	0.00E+00	0.00E+00	0.00E+00	0.00E+00	0.00E+00	0	0	0	0	0
12/00	0	0	0	0	0	0.00	0.00	0.00	0.00	0.00	0.00E+00	0.00E+00	0.00E+00	0.00E+00	0.00E+00	0	0	0	0	0

DATE	**NOT W-22 Total sludge ESTs	Total volume in the ESTs: C-1	C-2	W-21	W-22 (sldg o	W-23	Waste Volume in ESTs	CITs supernate	CITs sludge	CITs NO3 (M)	CITs Cs (Bq/ml)	Total waste volume
1/96	30,400	1,401	26,600	24,650	6,800	19,700	72,351					384,151
2/96	30,400	1,401	26,600	24,990	6,800	19,700	72,691	0	0	0.00	0.00E+00	384,491
3/96	30,400	2,981	26,600	25,830	6,800	19,700	75,111	0	0	0.00	0.00E+00	386,911
4/96	30,400	2,981	26,600	26,290	6,800	19,700	75,571	0	0	0.00	0.00E+00	382,371
5/96	30,400	2,981	26,600	26,580	6,800	19,700	75,861	0	0	0.00	0.00E+00	382,661
6/96	30,400	2,981	26,600	27,100	6,800	19,700	76,381	0	0	0.00	0.00E+00	383,181
7/96	30,400	2,981	26,600	27,480	6,800	19,700	76,761	0	0	0.00	0.00E+00	383,561
8/96	30,400	2,981	26,600	27,723	6,800	19,700	77,004	0	0	0.00	0.00E+00	375,004
9/96	30,400	5,160	26,600	28,053	6,800	19,700	79,513	0	0	0.00	0.00E+00	377,513
10/96	30,400	5,160	26,600	28,453	6,800	19,700	79,913	0	0	0.00	0.00E+00	377,913
11/96	30,400	5,160	26,600	28,853	6,800	19,700	80,313	0	0	0.00	0.00E+00	378,313
12/96	30,400	7,160	26,600	29,253	6,800	19,700	82,713	0	0	0.00	0.00E+00	380,713
1/97	30,400	7,160	26,600	29,653	6,800	19,700	83,113	0	0	0.00	0.00E+00	381,113
2/97	30,400	7,160	26,600	30,053	6,800	19,700	83,513	0	0	0.00	0.00E+00	381,513
3/97	30,400	9,160	26,600	30,453	6,800	19,700	85,913	0	0	0.00	0.00E+00	383,913
4/97	30,400	9,160	26,600	30,853	6,800	19,700	86,313	0	0	0.00	0.00E+00	384,313
5/97	30,400	9,160	26,600	31,253	6,800	19,700	86,713	0	0	0.00	0.00E+00	384,713
6/97	30,400	11,160	26,600	31,653	6,800	19,700	89,113	0	0	0.00	0.00E+00	387,113
7/97	30,400	11,160	26,600	32,053	6,800	19,700	89,513	0	0	0.00	0.00E+00	387,513
	30,438	11,160	26,600	46,091	6,800	19,700	103,551	0	0	0.00	0.00E+00	387,513
	30,476	32,198	26,600	46,091	6,800	19,700	124,589	0	0	0.00	0.00E+00	387,513
8/97	30,476	32,198	26,600	46,491	6,800	19,700	124,989	0	0	0.00	0.00E+00	387,913
	30,476	32,198	26,600	46,491	6,800	19,700	124,989	0	0	0.00	0.00E+00	387,913
	30,476	32,198	26,600	46,491	6,800	19,700	124,989	0	0	0.00	0.00E+00	387,913
9/97	24,679	34,598	26,600	7,368	6,800	19,700	88,266	0	0	0.00	0.00E+00	390,313
	24,679	34,598	26,600	7,368	6,800	19,700	88,266	0	0	0.00	0.00E+00	391,313
	24,679	7,582	26,600	34,384	6,800	19,700	88,266	0	0	0.00	0.00E+00	391,313
	23,804	7,582	26,600	28,479	6,800	19,700	82,361	0	0	0.00	0.00E+00	391,313
	23,804	7,582	26,600	28,479	6,800	19,700	82,361	0	0	0.00	0.00E+00	392,313
	22,382	7,582	26,600	18,883	6,800	19,700	72,765	0	0	0.00	0.00E+00	392,313
	22,382	7,582	26,600	18,883	6,800	19,700	72,765	0	0	0.00	0.00E+00	393,313
	20,085	7,582	26,600	3,382	6,800	19,700	57,264	0	0	0.00	0.00E+00	393,313
	20,085	7,582	26,600	3,382	6,800	19,700	57,264	0	0	0.00	0.00E+00	394,313
	19,522	7,582	26,600	0	6,800	19,700	53,882	0	0	0.00	0.00E+00	394,313
	19,522	7,582	26,600	0	6,800	19,700	53,882	0	0	0.00	0.00E+00	395,313
10/97	19,522	7,982	26,600	0	6,800	19,700	54,282	0	0	0.00	0.00E+00	379,413
11/97	19,522	8,382	26,600	0	6,800	19,700	54,682	0	0	0.00	0.00E+00	379,813
12/97	19,522	10,782	26,600	0	6,800	19,700	57,082	0	0	0.00	0.00E+00	371,713
1/98	19,522	11,182	26,600	0	6,800	40,700	78,482	0	0	0.00	0.00E+00	372,113
	19,522	11,182	26,600	0	6,800	40,700	78,482	0	0	0.00	0.00E+00	372,113
	19,522	11,182	26,600	0	6,800	40,700	78,482	0	0	0.00	0.00E+00	380,813
	19,522	11,182	26,600	0	6,800	40,700	78,482	0	0	0.00	0.00E+00	381,813
2/98	19,522	11,582	26,600	0	6,800	40,700	78,882	0	0	0.00	0.00E+00	372,913
3/98	19,522	13,982	26,600	0	6,800	40,700	81,282	0	0	0.00	0.00E+00	386,113
	19,522	13,982	26,600	0	6,800	40,700	81,282	0	0	0.00	0.00E+00	387,113
	19,522	13,982	26,600	0	6,800	40,700	81,282	0	0	0.00	0.00E+00	387,113
	19,522	13,982	26,600	0	6,800	40,700	81,282	0	0	0.00	0.00E+00	387,113
	19,522	13,982	26,600	0	6,800	40,700	81,282	0	0	0.00	0.00E+00	387,113
4/98	19,522	14,382	26,600	0	6,800	40,700	81,682	0	0	0.00	0.00E+00	402,613
	19,522	14,382	26,600	0	6,800	40,700	81,682	0	0	0.00	0.00E+00	403,613
	19,522	14,382	26,600	0	6,800	40,700	81,682	0	0	0.00	0.00E+00	403,613
	19,522	14,382	26,600	0	6,800	40,700	81,682	0	0	0.00	0.00E+00	406,613
	19,522	14,382	26,600	0	6,800	40,700	81,682	0	0	0.00	0.00E+00	407,613
	19,522	14,382	26,600	0	6,800	40,700	81,682	0	0	0.00	0.00E+00	407,613
5/98	19,522	14,782	26,600	0	6,800	40,700	82,082	0	0	0.00	0.00E+00	413,213
	19,522	14,782	26,600	0	6,800	40,700	82,082	0	0	0.00	0.00E+00	414,213
6/98	19,522	17,182	26,600	0	6,800	40,700	84,482	0	0	0.00	0.00E+00	409,413
	19,522	29,656	26,600	0	6,800	40,700	96,956	0	0	0.00	0.00E+00	392,886

DATE	**NOT W-22 Total sludge ESTs	Total volume in the ESTs: C-1	C-2	W-21	W-22 (sldg o	W-23	Waste Volume in ESTs	CITs supernate	CITs sludge	CITs NO3 (M)	CITs Cs (Bq/ml)	Total waste volume
	19,522	29,656	26,600	0	6,800	40,700	96,956	0	0	0.00	0.00E+00	392,886
7/98	19,816	30,056	46,894	0	6,800	40,700	117,649	0	0	0.00	0.00E+00	393,286
	19,816	30,056	46,894	0	6,800	40,700	117,649	26,000	0	7.82	9.18E+05	393,286
	16,536	30,056	46,894	0	6,800	15,516	92,465	26,000	0	7.82	9.18E+05	393,286
	16,536	30,056	46,894	0	6,800	15,516	92,465	26,000	0	7.82	9.18E+05	394,286
8/98	16,536	6,440	46,894	0	6,800	39,531	92,865	26,000	0	7.82	9.18E+05	394,686
	15,716	6,440	46,894	0	6,800	33,235	86,570	26,000	0	7.82	9.18E+05	394,686
	15,716	6,440	46,894	0	6,800	33,235	86,570	26,000	0	7.82	9.18E+05	395,686
	15,716	6,440	30,862	0	6,800	49,267	86,570	26,000	0	7.82	9.18E+05	395,686
	12,928	6,440	30,862	0	6,800	27,861	65,163	26,000	0	7.82	9.18E+05	395,686
	12,928	6,440	30,862	0	6,800	27,861	65,163	26,000	0	7.82	9.18E+05	396,686
	12,928	6,440	10,832	0	6,800	47,891	65,163	26,000	0	7.82	9.18E+05	396,686
	9,976	6,440	10,832	0	6,800	25,225	42,498	26,000	0	7.82	9.18E+05	396,686
	9,976	6,440	10,832	0	6,800	25,225	42,498	26,000	0	7.82	9.18E+05	397,686
	10,171	6,440	10,832	0	6,800	48,420	65,693	26,000	0	7.82	9.18E+05	397,686
9/98	10,171	6,440	10,832	0	6,800	50,820	68,093	49,500	6	6.36	7.14E+05	400,081
	10,171	6,440	10,832	0	6,800	50,820	68,093	49,500	6	6.36	7.14E+05	400,081
	10,171	6,440	10,832	0	6,800	50,820	68,093	49,500	6	6.36	7.14E+05	400,081
	6,399	6,440	10,832	0	6,800	21,859	39,131	49,500	6	6.36	7.14E+05	400,081
	6,399	6,440	10,832	0	6,800	21,859	39,131	49,500	6	6.36	7.14E+05	401,081
	3,339	6,440	10,832	0	6,800	0	17,272	49,500	6	6.36	7.14E+05	401,081
	3,339	6,440	10,832	0	6,800	0	17,272	49,500	6	6.36	7.14E+05	402,081
10/98	3,339	6,440	11,232	0	6,800	0	17,672	71,500	8	6.38	7.89E+05	402,479
	3,339	6,440	11,232	0	6,800	0	17,672	71,500	8	6.38	7.89E+05	402,479
	3,339	6,440	11,232	0	6,800	0	17,672	71,500	8	6.38	7.89E+05	402,479
	3,339	6,440	11,232	0	6,800	0	17,672	71,500	8	6.38	7.89E+05	402,479
	3,339	6,440	12,339	0	6,800	0	18,780	71,500	8	6.38	7.89E+05	403,586
11/98	3,339	6,440	12,739	0	0	0	19,180	71,500	8	6.38	7.89E+05	423,595
	3,339	6,440	12,739	0	0	0	19,180	71,500	8	6.38	7.89E+05	424,595
	3,339	6,440	12,739	0	0	0	19,180	95,500	12	6.04	8.13E+05	424,591
	3,339	6,440	12,739	0	0	0	19,180	119,500	24	5.74	8.02E+05	424,579
	3,339	6,440	12,739	0	0	0	19,180	119,500	24	5.74	8.02E+05	424,579
12/98	3,339	6,440	15,139	0	0	0	21,580	119,500	24	5.74	8.02E+05	426,979
	3,339	6,440	15,139	0	0	0	21,580	119,500	24	5.74	8.02E+05	426,979
	3,339	6,440	15,139	0	0	0	21,580	119,500	24	5.74	8.02E+05	426,979
	3,339	6,440	15,139	0	0	0	21,580	119,500	24	5.74	8.02E+05	426,979
	3,339	6,440	17,063	0	0	0	23,504	119,500	24	5.74	8.02E+05	415,103
	3,339	6,440	28,588	0	0	0	35,029	119,500	24	5.74	8.02E+05	407,928
	3,339	6,440	28,588	0	0	0	35,029	119,500	24	5.74	8.02E+05	407,928
	3,339	6,440	28,588	0	0	0	35,029	119,500	24	5.74	8.02E+05	407,928
1/99	3,339	6,440	28,988	0	0	0	35,429	119,500	24	5.74	8.02E+05	408,328
	3,339	6,440	28,988	0	0	0	35,429	119,500	24	5.74	8.02E+05	408,328
	3,339	6,440	28,988	0	0	0	35,429	119,500	24	5.74	8.02E+05	408,328
	3,339	8,102	28,988	0	0	0	37,090	119,500	24	5.74	8.02E+05	409,989
	3,339	8,102	28,988	0	0	0	37,090	137,500	37	5.63	8.25E+05	409,976
	3,339	8,102	28,988	0	0	0	37,090	161,500	44	5.44	8.69E+05	409,969
2/99	3,339	14,773	28,988	0	0	0	43,761	161,500	44	5.44	8.69E+05	405,640
	3,339	14,773	28,988	0	0	0	43,761	161,500	44	5.44	8.69E+05	405,640
	3,339	14,773	28,988	0	0	0	43,761	161,500	44	5.44	8.69E+05	405,640
	3,339	14,773	28,988	0	0	0	43,761	161,500	44	5.44	8.69E+05	405,640
3/99	3,339	17,173	28,988	0	0	0	46,161	161,500	44	5.44	8.69E+05	408,040
	3,339	17,173	28,988	0	0	0	46,161	161,500	44	5.44	8.69E+05	408,040
	3,339	17,173	28,988	0	0	0	46,161	161,500	44	5.44	8.69E+05	408,040
	3,339	17,173	28,988	0	0	0	46,161	161,500	44	5.44	8.69E+05	408,040
	3,339	17,173	28,988	0	0	0	46,161	161,500	44	5.44	8.69E+05	408,040
4/99	3,339	17,573	28,988	0	0	0	46,561	161,500	44	5.44	8.69E+05	408,440
	3,339	17,573	28,988	0	0	0	46,561	165,200	62	5.42	8.70E+05	408,422
	3,339	17,573	28,988	0	0	0	46,561	187,700	71	5.28	8.37E+05	408,414

DATE	**NOT W-22 Total sludge ESTs	Total volume in the ESTs: C-1	C-2	W-21	W-22 (sldg o	W-23	Waste Volume in ESTs	CITs supernate	CITs sludge	CITs NO3 (M)	CITs Cs (Bq/ml)	Total waste volume
	1,932	0	28,988	0	0	0	28,988	187,700	71	5.28	8.37E+05	408,414
	1,932	0	28,988	0	0	0	28,988	187,700	71	5.28	8.37E+05	409,414
5/99	1,352	0	20,292	0	0	0	20,292	188,100	71	5.28	8.35E+05	409,814
	1,352	0	20,292	0	0	0	20,292	188,100	71	5.28	8.35E+05	410,814
	0	0	0	0	0	0	0	188,100	71	5.28	8.35E+05	410,814
	0	0	0	0	0	0	0	188,100	71	5.28	8.35E+05	411,814
6/99	0	0	0	0	0	0	0	190,500	71	5.27	8.24E+05	414,214
	0	0	0	0	0	0	0	190,500	71	5.27	8.24E+05	414,214
	0	0	0	0	0	0	0	190,500	71	5.27	8.24E+05	414,214
	0	0	0	0	0	0	0	190,500	71	5.27	8.24E+05	414,214
	0	0	0	0	0	0	0	190,500	71	5.27	8.24E+05	414,214
7/99	0	0	0	0	0	0	0	190,900	71	5.27	8.23E+05	414,614
	0	0	0	0	0	0	0	190,900	71	5.27	8.23E+05	414,614
	0	0	0	0	0	0	0	190,900	71	5.27	8.23E+05	414,614
	0	0	0	0	0	0	0	190,900	71	5.27	8.23E+05	414,614
	0	0	0	0	0	0	0	190,900	71	5.27	8.23E+05	414,614
	0	0	0	0	0	0	0	190,900	71	5.27	8.23E+05	414,614
8/99	0	0	0	0	0	0	0	214,800	91	5.19	8.02E+05	414,993
	0	0	0	0	0	0	0	238,300	107	5.07	7.46E+05	414,978
	0	0	0	0	0	0	0	238,300	107	5.07	7.46E+05	414,978
	0	0	0	0	0	0	0	238,300	107	5.07	7.46E+05	414,978
	0	0	0	0	0	0	0	238,300	107	5.07	7.46E+05	414,978
9/99	10,400	0	0	0	0	44,470	44,470	240,700	107	5.07	7.39E+05	461,848
	10,400	0	0	0	0	44,470	44,470	240,700	107	5.07	7.39E+05	461,848
	10,400	0	0	0	0	44,470	44,470	240,700	107	5.07	7.39E+05	461,848
	10,400	0	0	0	0	44,470	44,470	240,700	107	5.07	7.39E+05	461,848
	10,400	0	0	0	0	44,470	44,470	240,700	107	5.07	7.39E+05	461,848
	10,400	0	0	0	0	44,470	44,470	240,700	107	5.07	7.39E+05	461,848
10/99	10,400	0	0	0	0	44,470	44,470	241,100	107	5.07	7.37E+05	462,248
	5,200	0	0	0	0	22,235	22,235	241,100	107	5.07	7.37E+05	462,248
	5,200	0	0	0	0	22,235	22,235	241,100	107	5.07	7.37E+05	462,248
	0	0	0	0	0	0	0	241,100	107	5.07	7.37E+05	462,248
	0	0	0	0	0	0	0	241,100	107	5.07	7.37E+05	462,248
11/99	0	0	0	0	0	0	0	241,500	107	5.07	7.36E+05	462,648
	0	0	0	0	0	0	0	241,500	107	5.07	7.36E+05	462,648
12/99	0	0	0	0	0	0	0	245,464	107	5.07	7.24E+05	449,612
	0	0	0	0	0	0	0	246,963	107	5.07	7.20E+05	434,112
	0	0	0	0	0	0	0	246,963	107	5.07	7.20E+05	434,112
	0	0	0	0	0	0	0	246,963	107	5.07	7.20E+05	434,112
	0	0	0	0	0	0	0	246,963	107	5.07	7.20E+05	434,112
1/00	0	0	0	0	0	0	0	247,363	107	5.07	7.19E+05	434,512
	0	0	0	0	0	0	0	247,363	107	5.07	7.19E+05	434,512
2/00	5,648	0	0	45,915	0	0	45,915	247,763	107	5.07	7.18E+05	480,827
	11,295	0	0	45,915	0	45,915	91,830	247,763	107	5.07	7.18E+05	526,742
	8,471	0	0	22,957	0	45,915	68,872	247,763	107	5.07	7.18E+05	526,742
	8,471	0	0	22,957	0	45,915	68,872	247,763	107	5.07	7.18E+05	527,742
	5,648	0	0	0	0	45,915	45,915	247,763	107	5.07	7.18E+05	527,742
	5,648	0	0	0	0	45,915	45,915	247,763	107	5.07	7.18E+05	528,742
3/00	5,648	0	0	40,267	0	45,915	86,182	250,163	107	5.07	7.11E+05	571,409
	2,824	0	0	40,267	0	22,957	63,225	250,163	107	5.07	7.11E+05	571,409
	2,824	0	0	40,267	0	22,957	63,225	250,163	107	5.07	7.11E+05	572,409
	0	0	0	40,267	0	0	40,267	250,163	107	5.07	7.11E+05	572,409
	0	0	0	40,267	0	0	40,267	250,163	107	5.07	7.11E+05	573,409
	0	0	0	40,267	0	0	40,267	251,162	107	5.07	7.08E+05	553,908
	0	0	0	40,267	0	0	40,267	252,262	107	5.07	7.05E+05	534,508
4/00	5,648	0	0	40,267	0	45,915	86,182	252,662	107	5.07	7.04E+05	580,823
	5,648	0	0	40,267	0	45,915	86,182	267,095	107	5.06	6.66E+05	574,756
	5,648	0	0	20,134	0	45,915	66,049	267,095	107	5.06	6.66E+05	574,756

DATE	**NOT W-22 Total sludge ESTs	Total volume in the ESTs: C-1	C-2	W-21	W-22 (sldg o	W-23	Waste Volume in ESTs	CITs supernate	CITs sludge	CITs NO3 (M)	CITs Cs (Bq/ml)	Total waste volume
	5,648	0	0	20,134	0	45,915	66,049	267,095	107	5.06	6.66E+05	575,756
	5,648	0	0	0	0	45,915	45,915	267,095	107	5.06	6.66E+05	575,756
	5,648	0	0	0	0	45,915	45,915	267,095	107	5.06	6.66E+05	576,756
5/00	11,295	0	0	45,915	0	45,915	91,830	267,495	107	5.06	6.65E+05	623,071
	9,036	0	0	45,915	0	27,549	73,464	267,495	107	5.06	6.65E+05	623,071
	9,036	0	0	45,915	0	27,549	73,464	267,495	107	5.06	6.65E+05	624,071
	6,325	0	0	45,915	0	5,510	51,425	267,495	107	5.06	6.65E+05	624,071
	6,325	0	0	45,915	0	5,510	51,425	267,495	107	5.06	6.65E+05	625,071
	6,325	0	0	45,915	0	5,510	51,425	269,049	107	5.06	6.61E+05	610,124
	6,325	0	0	45,915	0	5,510	51,425	284,672	107	5.06	6.25E+05	605,248
6/00	13,533	0	0	45,915	0	52,985	98,900	287,072	107	5.06	6.19E+05	385,972
	10,709	0	0	22,957	0	52,985	75,942	287,072	107	5.06	6.19E+05	363,014
	10,709	0	0	22,957	0	52,985	75,942	287,072	107	5.06	6.19E+05	363,014
	9,015	0	0	9,183	0	52,985	62,168	287,072	107	5.06	6.19E+05	349,240
	9,015	0	0	9,183	0	52,985	62,168	287,072	107	5.06	6.19E+05	349,240
	9,015	0	0	9,183	0	52,985	62,168	287,195	107	5.06	6.19E+05	349,363
	9,015	0	0	9,183	0	52,985	62,168	287,312	107	5.06	6.19E+05	349,479
	9,015	0	0	9,183	0	52,985	62,168	287,479	107	5.06	6.19E+05	349,646
7/00	5,861	0	0	9,183	0	31,791	40,974	287,879	107	5.06	6.18E+05	328,852
	5,861	0	0	9,183	0	31,791	40,974	287,879	107	5.06	6.18E+05	328,852
	3,022	0	0	9,183	0	12,716	21,899	287,879	107	5.06	6.18E+05	309,778
	3,022	0	0	9,183	0	12,716	21,899	287,879	107	5.06	6.18E+05	309,778
	1,130	0	0	9,183	0	0	9,183	287,879	107	5.06	6.18E+05	297,062
	1,130	0	0	9,183	0	0	9,183	287,879	107	5.06	6.18E+05	297,062
	4,895	0	0	39,793	0	0	39,793	287,879	107	5.06	6.18E+05	327,672
	2,937	0	0	23,876	0	0	23,876	287,879	107	5.06	6.18E+05	311,754
	2,937	0	0	23,876	0	0	23,876	287,879	107	5.06	6.18E+05	311,754
	2,937	0	0	23,876	0	0	23,876	288,147	107	5.06	6.17E+05	312,023
	2,937	0	0	23,876	0	0	23,876	289,984	107	5.06	6.13E+05	313,859
8/00	2,937	0	0	23,876	0	0	23,876	290,402	107	5.06	6.12E+05	314,278
	2,937	0	0	23,876	0	0	23,876	292,191	107	5.06	6.09E+05	316,067
	2,937	0	0	23,876	0	0	23,876	292,206	107	5.06	6.08E+05	316,082
	881	0	0	7,163	0	0	7,163	292,206	107	5.06	6.08E+05	299,369
	881	0	0	7,163	0	0	7,163	292,206	107	5.06	6.08E+05	299,369
	0	0	0	0	0	0	0	292,206	107	5.06	6.08E+05	292,206
	0	0	0	0	0	0	0	292,206	107	5.06	6.08E+05	292,206
9/00	0	0	0	0	0	0	0	294,606	107	5.06	6.04E+05	294,606
	0	0	0	0	0	0	0	294,606	107	5.06	6.04E+05	294,606
	0	0	0	0	0	0	0	294,606	107	5.06	6.04E+05	294,606
	0	0	0	0	0	0	0	294,606	107	5.06	6.04E+05	294,606
	0	0	0	0	0	0	0	294,616	107	5.06	6.04E+05	294,616
	0	0	0	0	0	0	0	294,762	107	5.06	6.03E+05	294,762
	0	0	0	0	0	0	0	294,764	107	5.06	6.03E+05	294,764
10/00	0	0	0	0	0	0	0	295,164	107	5.06	6.02E+05	295,164
	0	0	0	0	0	0	0	295,164	107	5.06	6.02E+05	295,164
	0	0	0	0	0	0	0	295,164	107	5.06	6.02E+05	295,164
	0	0	0	0	0	0	0	295,164	107	5.06	6.02E+05	295,164
	0	0	0	0	0	0	0	295,164	107	5.06	6.02E+05	295,164
	0	0	0	0	0	0	0	295,164	107	5.06	6.02E+05	295,164
11/00	0	0	0	0	0	0	0	295,564	107	5.06	6.02E+05	295,564
	0	0	0	0	0	0	0	295,564	107	5.06	6.02E+05	295,564
	0	0	0	0	0	0	0	295,564	107	5.06	6.02E+05	295,564
	0	0	0	0	0	0	0	295,564	107	5.06	6.02E+05	295,564
12/00	0	0	0	0	0	0	0	297,964	107	5.06	5.97E+05	297,964

Internal Distribution

1-3.	J. S. Baldwin	27-29.	T. H. Monk
4.	C. A. Bednarz	30-32.	J. W. Moore
5.	J. M. Begovich	33.	T. E. Myrick
6.	C. H. Byers	34.	R. D. Nipper, Jr.
7.	E. D. Collins	35.	B. D. Patton
8.	T. B. Conley	36.	J. H. Platfoot
9.	A. G. Croff	37.	D. E. Reichle
10-12.	S. M. DePaoli	38-40.	S. M. Robinson
13.	O. W. Hale	41.	S. T. Rudell
14.	T. D. Hylton	42.	T. F. Scanlan
15.	M. A. Johnson	43.	C. B. Scott
16.	R. T. Jubin	44.	J. L. Stellern
17-19.	T. E. Kent	45.	J. R. Trabalka
20.	C. M. Kendrick	46.	S. D. Van Hoesen
21.	B. E. Lewis	47.	A. B. Walker
22.	J. M. Lynch	48.	J. R. Walker, Jr.
23.	J. J. Maddox	49.	T. D. Welch
24.	R. C. Mason	50.	J. H. Wilson
25.	C. P. McGinnis	51.	Laboratory Records–RC
26.	L. E. McNeese	52.	WMRAD Document Management Center

External Distribution

53. S. Gibson, USDOE, 3 Main, Oak Ridge, TN 37830
54. C. S. Mims, USDOE, 3 Main, Oak Ridge, TN 37830
55. J. Noble-Dial, USDOE, 3 Main, Oak Ridge, TN 37830
56. G. Riner, USDOE, 3 Main, Oak Ridge, TN 37830
57–58. Office of Scientific and Technical Information, P.O. Box 62, Oak Ridge, TN 37830