FE-2475-16
Distribution Category UC-90b

DEVELOPING/MODIFYING COAL GRINDING PROCEDURES AND EQUIPMENT TO PRODUCE PREDICTABLE SIZE DISTRIBUTIONS DURING COAL PREPARATION

QUARTERLY PROGRESS REPORT
FOR THE
PERIOD
OCTOBER – DECEMBER 1977

NOTICE
This report was prepared as an account of work sponsored by the United States Government. Neither the United States nor the United States Department of Energy, nor any of their employees, nor any of their contractors, subcontractors, or their employees, makes any warranty, express or implied, or assumes any legal liability or responsibility for the accuracy, completeness or usefulness of any information, apparatus, product or process disclosed, or represents that its use would not infringe privately owned rights.

DR. PETER T. LUCKIE

KENNEDY VAN SAUN CORP.
DANVILLE, PA 17821

DATE PUBLISHED – 15 JANUARY 1977

PREPARED FOR THE UNITED STATES
ENERGY RESEARCH AND DEVELOPMENT ADMINISTRATION

UNDER CONTRACT EX-76-C-01-1475

DISCLAIMER

This report was prepared as an account of work sponsored by an agency of the United States Government. Neither the United States Government nor any agency thereof, nor any of their employees, makes any warranty, express or implied, or assumes any legal liability or responsibility for the accuracy, completeness, or usefulness of any information, apparatus, product, or process disclosed, or represents that its use would not infringe privately owned rights. Reference herein to any specific commercial product, process, or service by trade name, trademark, manufacturer, or otherwise does not necessarily constitute or imply its endorsement, recommendation, or favoring by the United States Government or any agency thereof. The views and opinions of authors expressed herein do not necessarily state or reflect those of the United States Government or any agency thereof.

DISCLAIMER

Portions of this document may be illegible in electronic image products. Images are produced from the best available original document.

ABSTRACT

This is the fifth Quarterly Progress Report for ERDA Contract No. EX-76-C-01-2475, "Developing/Modifying Coal Grinding Procedures and Equipment to Produce Predictable Size Distributions During Coal Preparation". It covers the period 1 October 1977 - 31 December 1977.

The project is broken down into 4 Tasks - Study Phase, Preparation Phase, Testing Phase and Reporting Phase. During this research period, work has been conducted mainly on the Study and Testing Phases.

Most of the effort under the Study Phase involved the subtask - Laboratory Analysis. The main effort of this subtask was centered on the explanation of the non-first order grinding kinetics observed during the laboratory ball and race mill grinding tests.

Work under the Testing Phase involved the combined subtasks - Test Planning/Modification, Testing and Data Reduction - and the subtask - Modification. The testing covered benchmark runs on the dry ball mill grinding system. The classification achieved during these runs were very coarse so the classifier was expanded to achieve finer classification. The specific energy values were high so the mill was taken out of service for mechanical corrections. The ball and race mill grinding circuit was put into operation and coarse grinding benchmark tests made. Under the subtask - Modification - the width of the classifier in the mill product handling system was increased; a new classifier engineered and released for manufacture; and the wet ball mill grinding system was altered for coal in oil testing.

Work during the next quarter will again center on laboratory analysis and grinding tests. In addition, the economic analysis subtask under the Reporting Phase will be initiated.

DISTRIBUTION OF THIS DOCUMENT IS UNLIMITED

INTRODUCTION

The impact of the energy crisis upon our country has delineated the need to develop our own energy sources; i.e., energy independence. Since coal is the most abundant documented fuel source within our country, its development is the key to achieving such independence as quickly as feasible. However, coal is a solid fuel, not a liquid or gaseous fuel. Coal also contains elements which, if present in sufficient quantity during combustion, can raise the pollution level of the atmosphere. Hence there has been an eager effort to develop processes to convert coal into nonpolluting liquid and gaseous fuels.

These conversion processes employ the latest technology. Each process under investigation requires a certain amount of coal preparation, including the reduction of the coal feedstock to a proper size range of particles. This need to produce the appropriately sized particles has raised several process questions.

1. What type of crusher or grinder is best or satisfactory to take a given feed size and type of coal to a desired product size? Frequently, a desired product is smaller than some size but with as few fines as possible, or the fraction in some size range has to be as high as possible.
2. How big does the machine have to be for a given throughput rate?
3. How much electrical energy (or its equivalent) is required per ton of product?
4. How does the size distribution vary with change in throughput rate and is a control scheme necessary or desirable?

5. Can the size distribution be readily varied if desired?
6. What is the optimum way of operating a machine in a given system?

Not all of these questions can be readily answered today. Hence, the need for this ERDA research contract to investigate the means for providing such information. The objectives of this coal grinding research contract are:

1. To develop procedures and to select and modify equipment for the controlled grinding and preparation of feed coal for demonstration and commercial sized plants.
2. To reduce the amount of undesirable and unusable undersized particles to less than 5% of the total feed coal weight.
3. To conduct experiments as required with crushers, roller mills, cylindrical mills, impact grinders and hammer mills for the purpose of obtaining data on controlled grinding.
4. To establish classes or bands of coal feeds by sizes and particle distribution. Desired limits are above 325 mesh at the small end and less than one inch at the large end.
5. To obtain data by grinding coal both wet and dry. Wet grinding should cover both aqueous and coal derived oils as the wetting agent.
6. To categorize at least three (3) distinctly different types of coals with respect to controlled grinding, size spectrum and percent of undersize.

7. To reduce the energy required in the controlled grinding operation commensurate with obtaining feed coals in the proper spectrum.
8. To analyze, collate and report the date and findings from this effort in a format to permit ready selection of coal grinding equipment and procedures for a given plant operation.

The product of this research effort will be the "ERDA Handbook on Controlled Grinding of Coal".

OVERVIEW

The beneficiation and utilization of insitu coal requires that the mined coal undergo progressive degrees of size reduction. The size reduction process actually starts with the mining of the coal. The top size of the mined coal is very dependent upon the type of mining system employed.

The mined coal undergoes primary breakage where the top size is reduced to the range of 8" to 3".

Either during the processing of the mined coal or usually before the utilization of the coal, the coal undergoes secondary crushing where the top size is reduced to the range of 2" to 1 1/4". The coal may simultaneously undergo sizing in order to produce special marketable fractions.

For final utilization as well as some of the newer beneficiation techniques, the top size must be further reduced. Then the coal undergoes pulverization which reduces the top size to 1/8" and/or grinding which reduces the top size to 1 mm or less.

Some of the devices employed to achieve the desired size reduction, such as rotary breakers, roll crushers, hammer mills and impactors can be utilized in several segments of the coal size reduction spectrum.

It is the grinding portion of the coal size reduction spectrum that this research contract is investigating.

The historical evolution of scaling of the unit operation, comminution of brittle materials, involves the definition of size consist by a single point, traditionally the 80% cumulative passing size. Such a definition is desireable because it brings extensive robustness to the empirical methods employed to predict the required size of machine to grind a given amount of material. Consequently the two reasons for employing size reduction - liberation and surface area - are also characterized by a single point on the size distribution. However, more recent research in many fields has emphasized the need to know the entire size distribution, which normally can be described by two points. Unfortunately, the scaling techniques commonly employed do not predict the product size distribution.

Over the last several decades, an improved method of modeling brittle comminution has been under development. It views the comminution process as a rate process. With the proper kinetic model it is possible to predict a grinding circuit performance.

In addition, alternate configuration and control performance can be simulated.

The equations of comminution are coupled with material balance equations, time of grind expressions and classification models to simulate the operation of a closed grinding circuit. When this is done to produce size distributions with the same common control point; e.g., all curves pass through the 80% passing value at the same size, several circuit responses are observed which are of direct interest to this research effort -

1. In order to obtain a size distribution with the minimum proportion of fines, the internal and/or classifier should be efficient.
2. The output of the circuit (TPH) is increased and the specific grinding energy reduced only when a closed circuit is operated to produce a steeper size distribution.

The former observation can be extended to a limiting condition. That is if the circulating ratio can be made to approach infinity, the minimum proportion of fines is achieved at maximum output and minimum energy consumption. The proportion of fines produced becomes a function of the type of material being ground.

These findings lead to the concept of a limiting size distribution for a particular material. Hence it is possible by knowing the cummulative primary progeny fragment distribution of a material to predict the limiting size distribution for that material. This is highly desireable since it

1. Immediately defines the minimum proportion of fines that can be expected.
2. Provides a standard with which to measure a circuit's performance.

These observations and findings apply to both the dry and wet grinding of coal.

Wet grinding refers to the process by which the material to be ground is presented to the grinding device as a slurry (a solid-liquid mixture). Usually, this enhances the grinding process and is quite common particularly when the downstream operation utilizes the solid in slurry form.

The most common liquid employed in wet grinding is water. Grinding in water has been enhanced by the addition of minor concentrations of grinding aids. However, water is not the only liquid used.

Exotic liquids, such as liquid CO_2, have been used in order to achieve added benefits such as a cryogenic effect. Other processes employ a liquid which can take advantage of the very reactive surfaces produced during fracture. For example, caustic solutions are used as the liquid in the grinding of bauxite ores prior to the extraction process.

The liquid used is also selected in order to take advantage of the mixing action of the grinding device, thereby eliminating difficult downstream blending of the solid and liquid. Unfortunately, sometimes the desired liquid has properties counter to those needed for effective grinding, such as viscosity.

The grinding of coal in oil prior to conversion or combustion is an example of a wet grinding process which could conveniently premix the solid and liquid, but the desired liquid may have properties counter to the grinding process such as extreme viscosity and low flash point. Thus, the grinding of coal in oil will require an extensive bench scale testing program before any pilot testing is attempted.

THE RESEARCH PROGRAM

Coal is geologically a sedimentary rock with distinct bedding planes containing a mixture of petrographic constituents. Because of its chemical nature it has some of the characteristics of a polymeric material. It is extensively precracked to give a macropore structure and also has a substantial internal volume of microporosity. The mineral constituents are usually dispersed within the coal and occur in a variety of forms and sizes. Hence, coal is a complex heterogeneous material.

However, the general conclusion from fracture studies on coal is that fracture is always brittle. Therefore, coal is a material which can be analyzed by the equations of comminution.

After the coal samples are selected the coal grinding research program will determine the primary progeny fragment distribution functions. From these, the limiting size consists will be established.

The kinetic grinding parameters for the different comminution devices will be determined and the appropriate mathematical models of the grinding systems developed. The mathematical models will be used to simulate operating conditions in order to guide the selection of the near optimal operating conditions for testing.

The grinding tests will be conducted around the selected operating conditions, validating the mathematical models and demonstrating the existence of an optimal operating condition. This will also establish the approximation that can be achieved to the limiting size consist and a basis to examine those aspects of the grinding system which must be improved in order to approach the limiting size consist.

The results will be appropriately analyzed and reduced for concise presentation in the ERDA HANDBOOK.

During the period of selecting the coal samples, establishing target product size distributions and performing the necessary laboratory studies, the grinding research facilities will be laid out and prepared. In addition, the state-of-the-art survey of coal grinding devices will be conducted. The other relevant coal properties, such as wear, will be determined in the laboratory during the testing period.

1 - STUDY PHASE
- 1.1 State of the Art Study
- 1.2 Selection of Samples
- 1.3 Laboratory Analysis

2 - PREPARATION PHASE
- 2.1 Facility Layout
- 2.2 Facility Preparation/Acquisition
- 2.3 Test Planning and Modifications

3 - TESTING PHASE

- 3.1 Testing
- 3.2 Modification
- 3.3 Data Reduction

4 - REPORTING PHASE

- 4.1 Economic Analysis
- 4.2 System Layout
- 4.3 ERDA Handbook
- 4.4 Final Report

The original scheduling of these tasks has undergone minor changes. Subtask 1.2 - Selection of Samples - was extended several months. Subtask 2.2 - Facility Preparation/Acquisition was extended in order to indicate that work will continue on the other grinding systems even though testing is initiated on one. Subtask 3.2 - Modification of Testing Equipment - was extended forward in order to indicate that some of the comminution equipment will undergo modification prior to its installation.

The Project Plan and Progress Report is attached. During this quarter, work has centered mainly on Subtasks 1.3, 2.3, 3.1, 3.2 and 3.3. A new base line projection was made at the end of the final contract year. To date 17120 man hours had been budgeted while 16481 man hours were spent. During this quarter 2777 man hours had been budgeted while 2137 man hours were spent.

PROJECT PLAN & PROGRESS REPORT

TASK 1- STUDY PHASE
1.1 STATE-OF-THE-ART STUDY
1.2 SELECTION OF SAMPLES
1.3 LABORATORY ANALYSIS (PENN STATE)

TASK 2-PREPARATION PHASE
2.1 FACILITY LAYOUT
2.2 FACILITY PREPARATION/ACQUISITION
2.3 TEST PLANNING/MODIFICATION

TASK 3-TESTING PHASE
3.1 TESTING (GRINDING)
3.2 MODIFICATION
3.3 DATA REDUCTION

TASK 4-REPORTING PHASE
4.1 ECONOMIC ANALYSIS
4.2 SYSTEM LAYOUT
4.3 COAL GRINDING HANDBOOK
4.4 FINAL REPORT

MONTHLY PROGRESS REPORTS
MONTHLY FINANCIAL REPORTS

TOPICAL REPORT (OPTIONAL)

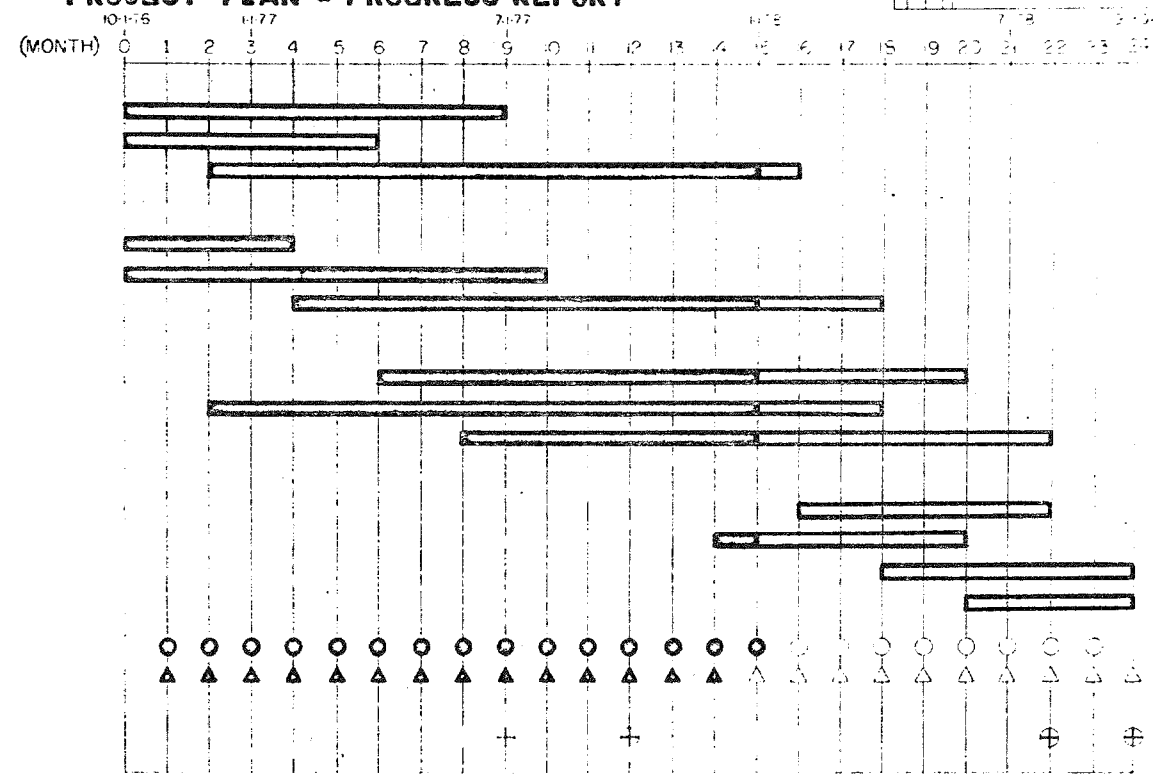

LEGEND

PROPRIETARY INFORMATION

- SCHEDULED
- PROGRESS
- SCHEDULE EXTENSION
- EARLY START
- BUDGET
- ACTUALS

MANHOURS

TOTAL	26,966
SPENT	16,481
PLANNED	17,120
VARIANCE	-639

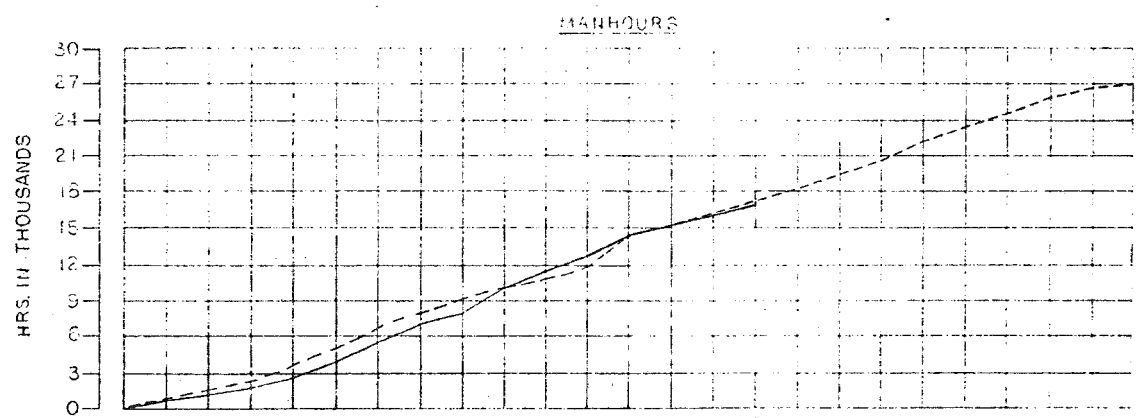

REVISED PER BASE LINE PLAN

PROJECT PLAN & PROGRESS REPORT FOR EPCA/DOE

KENNEDY-VAN SAUN CORP

9-31453

1.1 State of the Art Study

Work Accomplished

During this reporting period, the initial comments on the State-of-the-Art report draft were received. Some manufacturers of equipment have been recontacted to insure that the information they supplied is as complete as they would like it to be.

The two major areas of concern - energy consumption data and economic data - were reanalyzed. It was the feeling of the engineer assembling the report that meaningful data has not been published in this area. Data presented is of an esoteric nature, not a generic nature.

All revisions have been made to the draft and the text has gone to press.

Work Forecast

The State-of-the-Art study report will be issued. This will complete this subtask.

1.3 Laboratory Analysis

Work Accomplished

The grinding studies focussed on the mechanisms responsible for the nonfirst order breakage phenomena found in the ball and race mill.

The usual sizing techniques of sieving or sedimentation can determine only how many particles of a given size are present at any interrupted degree of grinding. These techniques cannot determine whether or not a given particle in a particular size range was ground from a larger particle or whether it simply remained unbroken during the period of grinding considered. Radioactive tracer technique can be utilized to separate these two possibilities.

With such a tool it should be possible to investigate the non-first order behavior of coals in the Hardgrove machine. The cause of this effect is either

a. the coal being composed of materials of different hardness (or grindability) or,
b. the fine environment produced during grinding is reducing the grinding rate

The material effect (a) has already been eliminated by grinding several samples into the non-first order region, combining the unbroken material to form a new feed and repeating the test. If a difference in hardness were present this composite feed would contain the 'harder'

material. However, the results exhibited the same initial breakage rates as the original feed coal.

The 'environmental effect' can be present in two forms: i) the presence of fines could be cushioning the coarser particles, and ii) the fines could be agglomerating to produce larger 'particles'. The radioactive tracer technique was used to investigate the effect of different grinding enviornments.

A 50 gm sample of 16 x 20 mesh material was ground for 10 revolutions in the Hardgrove machine. The ground material was then sieved for 20 minutes. From the 40 x 50 mesh size fraction material, 1.0 gram of material was replaced with 1.0 gram of irradiated material.

The irradiated material was prepared by performing 12 grinding tests in which 50.00 grams of the same 16 x 20 mesh coal were ground for 20 revolutions in the Hardgrove machine and the 40 x 50 mesh size fraction removed. After 60 grams of 40 x 50 mesh material was collected this material was resieved to produce 40.00 grams of 40 x 50 mesh material which was irradiated. The radio-isotope source was the Penn State Breazeale Reactor. The sample was irradiated in batches of 6-10 grams. The irradiation times ranged from 7 minutes to 1 hour depending upon the activity desired.

After the irradiated material was well mixed into the ground product from 10 revolutions of grinding, the sample was returned to the Hardgrove machine and ground

for 10 more revolutions. The material ground for 20 revolutions was sieved. Then a 1.00 gram of sample was taken from each size fraction and counted.

This procedure was carried out for different grinding times.

Disappearance plots of the irradiated sample were inconclusive. The short time plot suggests first order breakage while the longer time plot indicates non-first order breakage.

Since coal is a heterogenous material, it is quite possible that the radioisotopes produced may combine in a maceral group and be ground selectively. Two tests were done to check this possibility. First, a 50.00 g sample of 16 x 20 mesh coal was irradiated and then ground for 60 revolutions. It was then sized into various size fractions and the specific activity of each fraction was determined. The results are shown in Table 1. Next a 50.00 g sample of 16 x 20 mesh coal was ground for 60 revolutions and then irradiated. It was then sized into various size fractions without any grinding. The specific activity of each fraction was determined. The results are shown in Table 2.

If no selective grinding occurs, the specific activity of each size fraction should be the same for any given degree of grinding.

TABLE 1

bkg count = 406 cpm/g

Mesh #	Specific Activity (cpm/g)	Corrected Specific Activity (cpm/g)	Deviation from Average (cpm/g)
16	--	--	--
20	54541	54135	+31
30	55310	54904	+800
40	56148	55742	+1638
50	55509	55103	+999
70	56475	56069	+1965
100	54174	53768	-336
140	54484	54078	-26
200	53523	53117	-487
270	53789	53383	-721
400	--	--	--
-400	51146	50740	-3364

Totals	541039	±10867
Averages	54104	±1087
Average Percent Deviation		2.01
Maximum Percent Deviation		6.22

TABLE 2

bkg count = 433 cpm/g

Mesh #	Specific Activity (cpm/g.)	Corrected Specific Activity (cpm/g.)	Deviation from Average (cpm/g.)
16	--	--	--
20	26700	26267	+240
30	27413	26980	+953
40	27628	27195	+1168
50	28035	27602	+1575
70	27505	27072	+1045
100	26556	26123	+96
140	26700	26267	+240
200	25941	25508	-519
270	26230	25797	-230
400	23549	23116	-2411
-400	24805	24372	-1655

Totals	286299	±10632
Averages	26027	±967
Average Percent Deviation		3.71
Maximum Percent Deviation		11.18

From the results, it is clear that the specific activities are almost the same and the deviation percentage are small. Hence there is a very little tendency for these coal samples to be ground selectively.

Another series of tests were devised in order to determine the role of agglomeration on the environmental effects. These tests were performed using ultrafine coal particles (-10 microns) and extremely long grind times. In this series of tests only dry screening was performed because of the large saving in time.

To obtain the minus 10 micron sample, a set of micro-mesh sieves containing 30, 20 and 10 micron apertures was used. A minus 200 U.S. mesh (-74 microns) sample of the coal was resieved to obtain approximately 100g of minus 400 U.S. mesh (-37 microns) material. The reason for resieving rather than grinding was to avoid any possible agglomeration of coal particles. The minus 37 micron sample was then used as a starting sample for the preparation of the minus 10 micron sample. A very dilute slurry was obtained by mixing minus 400 mesh coal sample with distilled water and a dispersing solution (0.1% Daxad + 0.1% Calgon + 0.2% NPX). Daxad is a dispersant for coal; Calgon is a mineral dispersant and Tergitol NPX is a coal wetting agent. This slurry was then passed through each of the 30, 20 and 10 micron sieves in turn. These sieves were initially cleaned in a soap solution and then in isopropyl alcohol in an ultrasonic bath. The minus 10 micron particles obtained were collected by centrifuging and then dryed in an oven. A 10g sample of minus 10 micron particles was prepared in this manner. This sample was then irradiated.

A 50g sample of 16 x 20 mesh coal was ground for an initial grinding period. Then 1.00g of -400 mesh material was removed and replaced by 1.00g of minus 10 micron irradiated material. The sample was then ground for 10 minutes (final grinding period) and sieved. For counting purposes, a one gram sample was taken from each size under consideration. For the three tests, the initial grinding periods used were 20 minutes, 12 minutes and 5 minutes respectively while the final grinding period was always 10 minutes.

For the first test, the 50g sample of 16 x 20 mesh was ground for 20 minutes (initial grinding period).

The results are summarized in Tables 3-5. The test results shown in Table 3 included an extremely long grind time (20 minutes initial followed by 10 minutes final). Yet only 7% of the irradiation detected was in the plus 200 mesh sample. However, when the initial grind was 12 minutes some 12% was detected in that size as shown in Table 4. Hence, the amount of radiation detected is proportional to the amount of non-irradiated material present. This is the converse of what would be expected if agglomeration is occuring and suggests that the fine irradiated particles are adhering to the coarser particles during dry sieving.

This hypothesis is supported further by the results in Table 5 where only 5 minutes initial grinding was performed, yet 12.5% of irradiation was detected in the plus 200 mesh sample.

TABLE 3

Test #1 Initial grinding period = 20 min
Final grinding period = 10 min

bkg count = 2605/500 sec = 104/20 sec

Size Interval (U.S. mesh)	wt (g)	Standard Sample c/20 sec	Sample counts c/20 sec	% of irradiated Material in fraction ΔP* (calculated)
+200	27.00	b 16570 a 16394	150	7.11
200 x 400	6.60	b 16394 a 16437	398	11.30
-400	13.90 47.50	b 16437 a 16182	1106	81.59

TABLE 4

Test #2 Initial grinding period = 12 min
Final grinding period = 10 min

bkg count = 2589/500 sec = 104/20 sec

Size Interval (U.S. mesh)	wt (g)	Standard Sample c/20 sec	Sample c/20 sec	ΔP* (%)
+200	31.60	b 16485 a 16298	170	12.23
200 x 400	6.20	b 16298 a 16090	543	15.83
-400	11.50 49.30	b 16090 a 15923	1175	71.94

TABLE 5

Test #3 Initial grinding period = 5 min
Final grinding period = 10 min

bkg count = 2759/600 sec = 92/20 sec

Size Interval (U.S. mesh)	wt (g)	Standard Count/20 sec	Sample Count/20 sec	ΔP* (%)
+100	25.10	b 17237 a 17067	131	5.03
100 x 140	3.69	b 17067 a 17067	254	3.08
140 x 200	3.35	b 17007 a 16994	349	4.52
200 x 270	3.35	b 16994 a 16625	295	3.62
270 x 400	2.90	b 16625 a 16604	419	5.10
1400	9.75	b 16604 a 16321	1591	78.65
	48.14			

These results indicate that the agglomeration suggested would account for only a small part of the non-first order behavior. For example, in Table 5 the 1g of irradiated material accounts for only 0.05g in the plus 100 mesh sample. If the other 4g (for extrapolation of size distribution curves) of minus 10 micron sample present is included, then only 0.25g of the plus 100 mesh would be due to the suggested 'agglomeration'.

The non-first behavior is still being investigated.

Ball Mill

Preliminary work has been initiated to investigate the wet grinding of coal in oil and the use of 'cylpebs' in the place of spherical balls. Energy measurements will be used as the basis for filling conditions and as one of the criteria for comparison. Therefore, the torquemeter grinding table has been modified to enable the torquemeter to be disconnected during the handling of the mill. This will prevent any damage to the sensitive mechanisms of the meter during these operations. The viscosity - temperature relationship of the samples of #4 and #6 coal oil, are being performed at the Dept. of Petroleum and Natural Gas at Penn State prior to performing the ball milling tests. Three sizes of cylpebs have been received.

Roll Crusher

A computer program, CRUSHER MODEL, has been written and tested as described in FE-2475-13 report. It is

presently being modified to include a research procedure to find the most suitable values of the post classifier selection function and a statistical subroutine to provide a fitting index or measure of goodness of fit.

Hammer Mill

Although no testwork has yet been performed using coal, extensive testing has been conducted using quartz. This work has resulted in continual modification of test procedures and some aspects of the mill. For example, when coarse sizes of 3 x 4 mesh to 8 x 12 mesh were used initially, it was found that more than one communition mechanism was occurring. Therefore, finer sizes of 16 x 20 mesh to 100 x 140 mesh are presently being tested, while the hammers are being altered to allow greater clearance between the hammers and the classifying grate to full plate. When the operation of the mill has been determined using quartz, the project coals will then be tested.

Work Forecast

Initial qualitative tests on forged steel balls from two sources will be conducted to determine if the wear rate is sufficient to enable accurate quantitative measurements to be made.

The work on the Ball Mill, Roll Crusher and Hammer Mill will continue. The Hardgrove-Zeisel Mill (Standard

Hardgrove with torquementer attached) will be used to measure energy requirements in the ball and race mill.

The primary progeny breakage function computed by the BIII method has been added to the set of computer programs and will be used to compare BIII values with BII values for the ball and race mills.

2.2 Facility Preparation/Acquisition

Work Accomplished

All original equipment is installed and operational except for the following items on the wet ball mill grinding circuit:

a. wiring for the slurry density controller and sump level indicator
b. Centrifuge servicing

Work Forecast

The above items will be completed when these devices are actually used.

2.3/3.1/3.3 Test Planning/Modifications, Testing and Data Reduction

These three interacting subtasks have been combined for ease of reporting.

Work Accomplished

Development of benchmark data for the dry ball mill grinding circuit was continued. The computer summaries of these runs - 9, 10, 11, 12, 13, 14, 15, 16 - follow. Analysis of the previous benchmark runs (reported in FE-2475-13) plus special measurements made during tests 13, 14, 15 and 16 resulted in the decision to change the classifier in the dry ball mill grinding circuit. The selectivity curve determined from run 29 had a d_{50} value for the 1' wide classifier of 400 microns.

An extended test on the dry ball mill grinding system was made with the 2' wide classifier (runs 1 and 2 dated 11-8-77 and 11-9-77) demonstrated the expected improvement - increased production with increased circulation ratio. The computer summaries of these runs follow. The selectivity curve determined from these runs had a d_{50} value for the 2' wide classifier of approximately 75 microns.

Although these results were encouraging, it was decided to accelerate the manufacture of a different classifier, rather than continue to increase the width of the classifier (see 3.2 Modifications).

MASS BALANCE.

ERDA AIRSWEPT BALL MILL

TEST INFORMATION

TEST NO.	9 A	DATE.	10-5-77
COAL SOURCE.	GLENBURN	CLASS.	ANTHRACITE

PERCENT MOISTURE

FEED.	3.00	REJECTS.	2.86
CYCLONE.	1.08	DUST COLL.	1.00
CIRCUIT PRODUCT.	1.07		

MASS FLOW RATE (LB/HR)

CYCLONE.	1210.0	DUST COLL.	85.0

TEMPERATURE (FAHRENHEIT)

MILL INLET.	320.0	MILL OUTLET.	200.0

.....CIRCUIT FEED.....

WATER 39.7 LB/HR

COAL 1284.2 LB/HR

MICRONS	CUMULATIVE PERCENT PASSING
38100.	100.0
25400.	100.0
19000.	100.0
16000.	100.0
12700.	100.0
9510.	98.5
6350.	65.0
3360.	34.4
2380.	26.1
1190.	15.9
595.	10.2
297.	7.0
149.	5.2
74.	4.4
44.	4.2

.....REJECTS.....

WATER 13.2 LB/HR

COAL 451.7 LB/HR

CUMULATIVE PERCENT PASSING
94.5
88.0
76.0
62.2
40.3
12.0
2.1
0.9

.....CIRCUIT PRODUCT.....

WATER 13.9 LB/HR

COAL 1281.0 LB/HR

CUMULATIVE PERCENT PASSING
89.7
75.8
44.5
26.2

.....VENT.....

WATER 25.8 LB/HR

COAL 3.1 LB/HR

MASS BALANCE.

ERDA AIRSWEPT BALL MILL

TEST INFORMATION

TEST NO.	9 B	DATE.	10-5-77
COAL SOURCE.	GLENBURN	CLASS.	ANTHRACITE

PERCENT MOISTURE

FEED.	2.00	REJECTS.	2.52
CYCLONE.	0.91	DUST COLL.	0.91
CIRCUIT PRODUCT.	0.90		

MASS FLOW RATE (LB/HR)

CYCLONE.	1253.0	DUST COLL.	75.0

TEMPERATURE (FAHRENHEIT)

MILL INLET.	330.0	MILL OUTLET.	200.0

.....CIRCUIT FEED.....

WATER 27.6 LB/HR

COAL 1356.3 LB/HR

MICRONS	CUMULATIVE PERCENT PASSING
38100.	100.0
25400.	100.0
19000.	100.0
16000.	100.0
12700.	100.0
9510.	98.5
6350.	65.0
3360.	34.4
2380.	26.1
1190.	15.9
595.	10.2
297.	7.0
149.	5.2
74.	4.4
44.	4.2

.....REJECTS.....

WATER 11.3 LB/HR

COAL 438.6 LB/HR

CUMULATIVE PERCENT PASSING
95.3
92.1
84.6
74.9
59.9
25.0
4.2
1.1

.....CIRCUIT PRODUCT.....

WATER 12.0 LB/HR

COAL 1315.9 LB/HR

CUMULATIVE PERCENT PASSING
89.9
70.0
38.0
22.2

.....VENT.....

WATER 15.5 LB/HR

COAL 40.4 LB/HR

MASS BALANCE.

ERDA AIRSWEPT BALL MILL

TEST INFORMATION

TEST NO.	9 C	DATE.	10-5-77
COAL SOURCE.	GLENBURN	CLASS.	ANTHRACITE

PERCENT MOISTURE

FEED.	2.20	REJECTS.	2.66
CYCLONE.	1.21	DUST COLL.	0.99
CIRCUIT PRODUCT.	1.20		

MASS FLOW RATE (LB/HR)

CYCLONE.	1275.0	DUST COLL.	45.0

TEMPERATURE (FAHRENHEIT)

MILL INLET.	310.0	MILL OUTLET.	205.0

.....CIRCUIT FEED.....

WATER 31.1 LB/HR

COAL 1384.8 LB/HR

MICRONS	CUMULATIVE PERCENT PASSING
38100.	100.0
25400.	100.0
19000.	100.0
16000.	100.0
12700.	100.0
9510.	98.5
6350.	65.0
3360.	34.4
2380.	26.1
1190.	15.9
595.	10.2
297.	7.0
149.	5.2
74.	4.4
44.	4.2

.....REJECTS.....

WATER 13.3 LB/HR

COAL 489.6 LB/HR

CUMULATIVE PERCENT PASSING
96.1
91.6
82.5
69.0
48.5
21.3
10.5
9.0

.....CIRCUIT PRODUCT.....

WATER 15.8 LB/HR

COAL 1304.1 LB/HR

CUMULATIVE PERCENT PASSING
90.6
71.9
37.6
20.6

.....VENT.....

WATER 15.2 LB/HR

COAL 80.7 LB/HR

MASS BALANCE.

ERDA AIRSWEPT BALL MILL

TEST INFORMATION

TEST NO.	10 A	DATE.	10-5-77
COAL SOURCE.	GLENBURN	CLASS.	ANTHRACITE

PERCENT MOISTURE

FEED.	2.60	REJECTS.	2.20
CYCLONE.	1.00	DUST COLL.	0.96
CIRCUIT PRODUCT.	0.99		

MASS FLOW RATE (LB/HR)

CYCLONE.	1260.0	DUST COLL.	53.0

TEMPERATURE (FAHRENHEIT)

MILL INLET.	325.0	MILL OUTLET.	210.0

.....CIRCUIT FEED.....

WATER 33.3 LB/HR

COAL 1250.6 LB/HR

MICRONS	CUMULATIVE PERCENT PASSING
38100.	100.0
25400.	100.0
19000.	100.0
16000.	100.0
12700.	100.0
9510.	100.0
6350.	81.6
3360.	54.8
2380.	45.1
1190.	28.9
595.	18.1
297.	11.8
149.	8.1
74.	6.4
44.	6.0

.....REJECTS.....

WATER 7.7 LB/HR

COAL 345.2 LB/HR

CUMULATIVE PERCENT PASSING
98.9
98.0
91.8
78.8
57.8
29.3
10.8
7.9

.....CIRCUIT PRODUCT.....

WATER 13.1 LB/HR

COAL 1299.8 LB/HR

CUMULATIVE PERCENT PASSING
89.0
61.5
37.3
25.9

.....VENT.....

WATER 20.2 LB/HR

COAL -49.2 LB/HR

MASS BALANCE.

ERDA AIRSWEPT BALL MILL

TEST INFORMATION

TEST NO.	10 B	DATE.	10-5-77
COAL SOURCE.	GLENBURN	CLASS.	ANTHRACITE

PERCENT MOISTURE

FEED.	2.60	REJECTS.	2.20
CYCLONE.	1.15	DUST COLL.	1.15
CIRCUIT PRODUCT.	1.14		

MASS FLOW RATE (LB/HR)

CYCLONE.	1238.0	DUST COLL.	75.0

TEMPERATURE (FAHRENHEIT)

MILL INLET.	310.0	MILL OUTLET.	200.0

.....CIRCUIT FEED.....

WATER 33.3 LB/HR

COAL 1250.6 LB/HR

MICRONS	CUMULATIVE PERCENT PASSING
38100.	100.0
25400.	100.0
19000.	100.0
16000.	100.0
12700.	100.0
9510.	100.0
6350.	81.6
3360.	54.8
2380.	45.1
1190.	28.9
595.	18.1
297.	11.8
149.	8.1
74.	6.4
44.	6.0

.....REJECTS.....

WATER 7.4 LB/HR

COAL 330.5 LB/HR

CUMULATIVE PERCENT PASSING
98.3
97.8
90.5
76.8
57.6
20.9
3.4
0.9

.....CIRCUIT PRODUCT.....

WATER 15.0 LB/HR

COAL 1297.9 LB/HR

CUMULATIVE PERCENT PASSING
94.0
77.9
43.0
24.6

.....VENT.....

WATER 18.2 LB/HR

COAL -47.2 LB/HR

MASS BALANCE.

ERDA AIRSWEPT BALL MILL

TEST INFORMATION

TEST NO.	10 C	DATE.	10-5-77
COAL SOURCE.	GLENBURN	CLASS.	ANTHRACITE

PERCENT MOISTURE

FEED.	2.00	REJECTS.	2.10
CYCLONE.	1.06	DUST COLL.	0.94
CIRCUIT PRODUCT.	1.05		

MASS FLOW RATE (LB/HR)

CYCLONE.	1253.0	DUST COLL.	75.0

TEMPERATURE (FAHRENHEIT)

MILL INLET.	305.0	MILL OUTLET.	200.0

.....CIRCUIT FEED.....

WATER 26.4 LB/HR

COAL 1293.6 LB/HR

MICRONS	CUMULATIVE PERCENT PASSING
38100.	100.0
25400.	100.0
19000.	100.0
16000.	100.0
12700.	100.0
9510.	100.0
6350.	81.6
3360.	54.8
2380.	45.1
1190.	28.9
595.	18.1
297.	11.8
149.	8.1
74.	6.4
44.	6.0

.....REJECTS.....

WATER 7.7 LB/HR

COAL 360.2 LB/HR

CUMULATIVE PERCENT PASSING
100.0
99.2
93.4
77.9
54.7
20.2
3.2
1.2

.....CIRCUIT PRODUCT.....

WATER 13.9 LB/HR

COAL 1314.0 LB/HR

CUMULATIVE PERCENT PASSING
94.9
81.3
46.8
29.0

.....VENT.....

WATER 12.4 LB/HR

COAL -20.4 LB/HR

MASS BALANCE.

ERDA AIRSWEPT BALL MILL

TEST INFORMATION

TEST NO.	11 A	DATE.	10-5-77
COAL SOURCE.	GLENBURN	CLASS.	ANTHRACITE

PERCENT MOISTURE

FEED.	2.80	REJECTS.	1.82
CYCLONE.	0.96	DUST COLL.	1.11
CIRCUIT PRODUCT.	0.97		

MASS FLOW RATE (LB/HR)

CYCLONE.	870.0	DUST COLL.	86.0

TEMPERATURE (FAHRENHEIT)

MILL INLET.	355.0	MILL OUTLET.	190.0

.....CIRCUIT FEED.....

WATER 27.6 LB/HR

COAL 959.3 LB/HR

MICRONS	CUMULATIVE PERCENT PASSING
38100.	100.0
25400.	100.0
19000.	100.0
16000.	100.0
12700.	100.0
9510.	98.4
6350.	78.0
3360.	46.6
2380.	36.3
1190.	22.7
595.	14.3
297.	9.3
149.	6.0
74.	4.6
44.	4.1

.....REJECTS.....

WATER 1.5 LB/HR

COAL 81.4 LB/HR

CUMULATIVE PERCENT PASSING
100.0
99.9
99.7
97.2
82.0
40.0
12.9
5.6

.....CIRCUIT PRODUCT.....

WATER 9.3 LB/HR

COAL 946.6 LB/HR

CUMULATIVE PERCENT PASSING
98.0
86.5
54.5
32.8

.....VENT.....

WATER 18.3 LB/HR

COAL 12.6 LB/HR

MASS BALANCE.

ERDA AIRSWEPT BALL MILL

TEST INFORMATION

TEST NO.	11 B	DATE.	10-5-77
COAL SOURCE.	GLENBURN	CLASS.	ANTHRACITE

PERCENT MOISTURE

FEED.	2.20	REJECTS.	1.52
CYCLONE.	0.88	DUST COLL.	1.31
CIRCUIT PRODUCT.	0.92		

MASS FLOW RATE (LB/HR)

CYCLONE.	900.0	DUST COLL.	98.0

TEMPERATURE (FAHRENHEIT)

MILL INLET.	345.0	MILL OUTLET.	190.0

.....CIRCUIT FEED.....

WATER 21.3 LB/HR

COAL 950.6 LB/HR

MICRONS	CUMULATIVE PERCENT PASSING
38100.	100.0
25400.	100.0
19000.	100.0
16000.	100.0
12700.	100.0
9510.	98.4
6350.	78.0
3360.	46.6
2380.	36.3
1190.	22.7
595.	14.3
297.	9.3
149.	6.0
74.	4.6
44.	4.1

.....REJECTS.....

WATER 1.2 LB/HR

COAL 81.7 LB/HR

CUMULATIVE PERCENT PASSING
100.0
100.0
99.9
99.2
87.3
43.3
13.3
5.8

.....CIRCUIT PRODUCT.....

WATER 9.2 LB/HR

COAL 988.7 LB/HR

CUMULATIVE PERCENT PASSING
98.4
80.8
55.3
35.9

.....VENT.....

WATER 12.1 LB/HR

COAL -38.1 LB/HR

MASS BALANCE.

ERDA AIRSWEPT BALL MILL

TEST INFORMATION

TEST NO.	11 C	DATE.	10-5-77
COAL SOURCE.	GLENBURN	CLASS.	ANTHRACITE

PERCENT MOISTURE

FEED.	2.60	REJECTS.	1.64
CYCLONE.	1.07	DUST COLL.	1.62
CIRCUIT PRODUCT.	1.09		

MASS FLOW RATE (LB/HR)

CYCLONE.	945.0	DUST COLL.	36.0

TEMPERATURE (FAHRENHEIT)

MILL INLET.	330.0	MILL OUTLET.	190.0

.....CIRCUIT FEED.....

WATER 26.1 LB/HR

COAL 977.8 LB/HR

MICRONS	CUMULATIVE PERCENT PASSING
38100.	100.0
25400.	100.0
19000.	100.0
16000.	100.0
12700.	100.0
9510.	98.4
6350.	78.0
3360.	46.6
2380.	36.3
1190.	22.7
595.	14.3
297.	9.3
149.	6.0
74.	4.6
44.	4.1

.....REJECTS.....

WATER 1.5 LB/HR

COAL 92.4 LB/HR

CUMULATIVE PERCENT PASSING
100.0
100.0
99.9
99.4
87.2
44.1
15.3
7.5

.....CIRCUIT PRODUCT.....

WATER 10.6 LB/HR

COAL 970.3 LB/HR

CUMULATIVE PERCENT PASSING
99.7
92.7
65.3
46.8

.....VENT.....

WATER 15.4 LB/HR

COAL 7.5 LB/HR

MASS BALANCE.

ERDA AIRSWEPT BALL MILL

TEST INFORMATION

TEST NO.	12 A	DATE.	10-5-77
COAL SOURCE.	GLENBURN	CLASS.	ANTHRACITE

PERCENT MOISTURE

FEED.	2.80	REJECTS.	1.68
CYCLONE.	0.95	DUST COLL.	1.53
CIRCUIT PRODUCT.	0.98		

MASS FLOW RATE (LB/HR)

CYCLONE.	750.0	DUST COLL.	53.0

TEMPERATURE (FAHRENHEIT)

MILL INLET.	305.0	MILL OUTLET.	185.0

.....CIRCUIT FEED.....

WATER 23.9 LB/HR

COAL 830.0 LB/HR

MICRONS	CUMULATIVE PERCENT PASSING
38100.	100.0
25400.	100.0
19000.	100.0
16000.	100.0
12700.	100.0
9510.	99.6
6350.	82.5
3360.	51.4
2380.	40.5
1190.	25.6
595.	16.2
297.	10.6
149.	7.2
74.	5.2
44.	4.8

.....REJECTS.....

WATER 0.7 LB/HR

COAL 46.2 LB/HR

CUMULATIVE PERCENT PASSING
100.0
100.0
100.0
100.0
100.0
99.9
93.2
55.9
23.4
12.3

.....CIRCUIT PRODUCT.....

WATER 7.9 LB/HR

COAL 795.0 LB/HR

CUMULATIVE PERCENT PASSING
99.9
91.5
64.8
42.9

.....VENT.....

WATER 15.9 LB/HR

COAL 35.0 LB/HR

MASS BALANCE.

ERDA AIRSWEPT BALL MILL

TEST INFORMATION

TEST NO.	12 B	DATE.	10-5-77
COAL SOURCE.	GLENBURN	CLASS.	ANTHRACITE

PERCENT MOISTURE

FEED.	3.20	REJECTS.	1.48
CYCLONE.	0.62	DUST COLL.	1.02
CIRCUIT PRODUCT.	0.66		

MASS FLOW RATE (LB/HR)

CYCLONE.	773.0	DUST COLL.	86.0

TEMPERATURE (FAHRENHEIT)

MILL INLET.	310.0	MILL OUTLET.	185.0

.....CIRCUIT FEED.....

WATER 27.4 LB/HR

COAL 830.5 LB/HR

MICRONS	CUMULATIVE PERCENT PASSING
38100.	100.0
25400.	100.0
19000.	100.0
16000.	100.0
12700.	100.0
9510.	99.6
6350.	82.5
3360.	51.4
2380.	40.5
1190.	25.6
595.	16.2
297.	10.6
149.	7.2
74.	5.2
44.	4.8

.....REJECTS.....

WATER 0.7 LB/HR

COAL 50.2 LB/HR

CUMULATIVE PERCENT PASSING
100.0
100.0
99.9
99.2
92.7
60.2
24.1
9.9

.....CIRCUIT PRODUCT.....

WATER 5.6 LB/HR

COAL 853.3 LB/HR

CUMULATIVE PERCENT PASSING
100.0
100.0
100.0
100.0
100.0

.....VENT.....

WATER 21.7 LB/HR

COAL -22.7 LB/HR

MASS BALANCE.

ERDA AIRSWEPT BALL MILL

TEST INFORMATION

TEST NO.	12 C	DATE.	10-5-77
COAL SOURCE.	GLENBURN	CLASS.	ANTHRACITE

PERCENT MOISTURE

FEED.	3.40	REJECTS.	1.52
CYCLONE.	0.81	DUST COLL.	0.87
CIRCUIT PRODUCT.	0.81		

MASS FLOW RATE (LB/HR)

CYCLONE.	810.0	DUST COLL.	47.0

TEMPERATURE (FAHRENHEIT)

MILL INLET.	320.0	MILL OUTLET.	190.0

.....CIRCUIT FEED.....

WATER 29.0 LB/HR

COAL 825.9 LB/HR

MICRONS	CUMULATIVE PERCENT PASSING
38100.	100.0
25400.	100.0
19000.	100.0
16000.	100.0
12700.	100.0
9510.	99.6
6350.	82.5
3360.	51.4
2380.	40.5
1190.	25.6
595.	16.2
297.	10.6
149.	7.2
74.	5.2
44.	4.8

.....REJECTS.....

WATER 0.8 LB/HR

COAL 55.1 LB/HR

CUMULATIVE PERCENT PASSING
100.0
100.0
100.0
100.0
99.9
99.4
93.2
53.7
18.7
6.9

.....CIRCUIT PRODUCT.....

WATER 6.9 LB/HR

COAL 850.0 LB/HR

CUMULATIVE PERCENT PASSING
99.5
94.2
72.0
48.3

.....VENT.....

WATER 22.1 LB/HR

COAL -24.1 LB/HR

MASS BALANCE.

ERDA AIRSWEPT BALL MILL

TEST INFORMATION

TEST NO.	13 A	DATE.	10-7-77
COAL SOURCE.	GLENBURN	CLASS.	ANTHRACITE

PERCENT MOISTURE

FEED.	3.90	REJECTS.	2.39
CYCLONE.	1.27	DUST COLL.	1.73
CIRCUIT PRODUCT.	1.30		

MASS FLOW RATE (LB/HR)

CYCLONE.	998.0	DUST COLL.	73.0

TEMPERATURE (FAHRENHEIT)

MILL INLET.	285.0	MILL OUTLET.	180.0

.....CIRCUIT FEED.....

WATER 46.6 LB/HR

COAL 1148.3 LB/HR

MICRONS	CUMULATIVE PERCENT PASSING
38100.	100.0
25400.	100.0
19000.	100.0
16000.	100.0
12700.	99.1
9510.	96.3
6350.	60.0
3360.	23.6
2380.	15.6
1190.	8.4
595.	6.3
297.	5.6
149.	5.2
74.	5.0
44.	5.0

.....REJECTS.....

WATER 15.4 LB/HR

COAL 629.5 LB/HR

CUMULATIVE PERCENT PASSING
96.3
92.1
81.9
67.6
44.4
13.3
2.4
1.9

.....CIRCUIT PRODUCT.....

WATER 13.9 LB/HR

COAL 1057.0 LB/HR

CUMULATIVE PERCENT PASSING
90.1
69.9
33.3
24.1

.....VENT.....

WATER 32.6 LB/HR

COAL 91.3 LB/HR

MASS BALANCE.

ERDA AIRSWEPT BALL MILL

TEST INFORMATION

TEST NO.	13 B	DATE.	10-7-77
COAL SOURCE.	GLENBURN	CLASS.	ANTHRACITE

PERCENT MOISTURE

FEED.	5.30	REJECTS.	2.33
CYCLONE.	1.22	DUST COLL.	1.22
CIRCUIT PRODUCT.	1.21		

MASS FLOW RATE (LB/HR)

CYCLONE.	930.0	DUST COLL.	51.0

TEMPERATURE (FAHRENHEIT)

MILL INLET.	280.0	MILL OUTLET.	180.0

.....CIRCUIT FEED.....

WATER 64.4 LB/HR

COAL 1151.5 LB/HR

MICRONS	CUMULATIVE PERCENT PASSING
38100.	100.0
25400.	100.0
19000.	100.0
16000.	100.0
12700.	99.1
9510.	96.3
6350.	60.0
3360.	23.6
2380.	15.6
1190.	8.4
595.	6.3
297.	5.6
149.	5.2
74.	5.0
44.	5.0

.....REJECTS.....

WATER 14.8 LB/HR

COAL 623.1 LB/HR

CUMULATIVE PERCENT PASSING
99.1
97.2
91.2
75.9
49.7
13.3
1.5
0.9

.....CIRCUIT PRODUCT.....

WATER 11.9 LB/HR

COAL 969.0 LB/HR

CUMULATIVE PERCENT PASSING
91.7
67.7
30.1
19.2

.....VENT.....

WATER 52.4 LB/HR

COAL 182.5 LB/HR

MASS BALANCE.

ERDA AIRSWEPT BALL MILL

TEST INFORMATION

TEST NO.	13 C	DATE.	10-7-77
COAL SOURCE.	GLENBURN	CLASS.	ANTHRACITE

PERCENT MOISTURE

FEED.	4.70	REJECTS.	2.44
CYCLONE.	1.33	DUST COLL.	1.45
CIRCUIT PRODUCT.	1.33		

MASS FLOW RATE (LB/HR)

CYCLONE.	1135.0	DUST COLL.	54.0

TEMPERATURE (FAHRENHEIT)

MILL INLET.	285.0	MILL OUTLET.	180.0

.....CIRCUIT FEED.....

WATER 60.4 LB/HR

COAL 1226.5 LB/HR

MICRONS	CUMULATIVE PERCENT PASSING
38100.	100.0
25400.	100.0
19000.	100.0
16000.	100.0
12700.	99.1
9510.	96.3
6350.	60.0
3360.	23.6
2380.	15.6
1190.	8.4
595.	6.3
297.	5.6
149.	5.2
74.	5.0
44.	5.0

.....REJECTS.....

WATER 17.0 LB/HR

COAL 682.9 LB/HR

CUMULATIVE PERCENT PASSING
96.9
92.0
82.8
71.0
50.9
15.3
3.1
2.3

.....CIRCUIT PRODUCT.....

WATER 15.8 LB/HR

COAL 1173.1 LB/HR

CUMULATIVE PERCENT PASSING
91.1
74.0
37.5
23.7

.....VENT.....

WATER 44.6 LB/HR

COAL 53.3 LB/HR

MASS BALANCE.

ERDA AIRSWEPT BALL MILL

TEST INFORMATION

TEST NO.	14 A	DATE.	10-7-77
COAL SOURCE.	GLENBURN	CLASS.	ANTHRACITE

PERCENT MOISTURE

FEED.	4.00	REJECTS.	2.40
CYCLONE.	1.49	DUST COLL.	1.25
CIRCUIT PRODUCT.	1.47		

MASS FLOW RATE (LB/HR)

CYCLONE.	765.0	DUST COLL.	66.0

TEMPERATURE (FAHRENHEIT)

MILL INLET.	310.0	MILL OUTLET.	180.0

.....CIRCUIT FEED.....

WATER 45.0 LB/HR

COAL 1080.9 LB/HR

MICRONS	CUMULATIVE PERCENT PASSING
38100.	100.0
25400.	93.5
19000.	93.5
16000.	93.5
12700.	93.5
9510.	90.8
6350.	57.3
3360.	20.8
2380.	13.7
1190.	8.3
595.	6.1
297.	5.0
149.	4.3
74.	3.9
44.	3.8

.....REJECTS.....

WATER 9.9 LB/HR

COAL 403.0 LB/HR

CUMULATIVE PERCENT PASSING
100.0
99.0
96.8
83.0
51.7
15.4
2.2
0.5

.....CIRCUIT PRODUCT.....

WATER 12.2 LB/HR

COAL 818.7 LB/HR

CUMULATIVE PERCENT PASSING
87.7
64.0
33.5
20.5

.....VENT.....

WATER 32.8 LB/HR

COAL 262.1 LB/HR

MASS BALANCE.

ERDA AIRSWEPT BALL MILL

TEST INFORMATION

TEST NO.	14 B	DATE.	10-7-77
COAL SOURCE.	GLENBURN	CLASS.	ANTHRACITE

PERCENT MOISTURE

FEED.	4.40	REJECTS.	2.05
CYCLONE.	1.37	DUST COLL.	1.34
CIRCUIT PRODUCT.	1.36		

MASS FLOW RATE (LB/HR)

CYCLONE.	840.0	DUST COLL.	124.0

TEMPERATURE (FAHRENHEIT)

MILL INLET.	330.0	MILL OUTLET.	180.0

.....CIRCUIT FEED.....

WATER 48.3 LB/HR

COAL 1049.6 LB/HR

MICRONS	CUMULATIVE PERCENT PASSING
38100.	100.0
25400.	93.5
19000.	93.5
16000.	93.5
12700.	93.5
9510.	90.8
6350.	57.3
3360.	20.8
2380.	13.7
1190.	8.3
595.	6.1
297.	5.0
149.	4.3
74.	3.9
44.	3.8

.....REJECTS.....

WATER 11.7 LB/HR

COAL 562.2 LB/HR

CUMULATIVE PERCENT PASSING
99.2
98.9
93.9
76.6
43.1
10.9
2.4
1.9

.....CIRCUIT PRODUCT.....

WATER 13.1 LB/HR

COAL 950.8 LB/HR

CUMULATIVE PERCENT PASSING
91.7
67.1
36.6
23.5

.....VENT.....

WATER 35.1 LB/HR

COAL 98.8 LB/HR

MASS BALANCE.

ERDA AIRSWEPT BALL MILL

TEST INFORMATION

TEST NO.	14 C	DATE.	10-7-77
COAL SOURCE.	GLENBURN	CLASS.	ANTHRACITE

PERCENT MOISTURE

FEED.	4.10	REJECTS.	2.41
CYCLONE.	0.82	DUST COLL.	1.76
CIRCUIT PRODUCT.	0.86		

MASS FLOW RATE (LB/HR)

CYCLONE.	1275.0	DUST COLL.	58.0

TEMPERATURE (FAHRENHEIT)

MILL INLET.	310.0	MILL OUTLET.	180.0

.....CIRCUIT FEED.....

WATER 45.5 LB/HR

COAL 1064.4 LB/HR

MICRONS	CUMULATIVE PERCENT PASSING
38100.	100.0
25400.	93.5
19000.	93.5
16000.	93.5
12700.	93.5
9510.	90.8
6350.	57.3
3360.	20.8
2380.	13.7
1190.	8.3
595.	6.1
297.	5.0
149.	4.3
74.	3.9
44.	3.8

.....REJECTS.....

WATER 51.1 LB/HR

COAL 2071.8 LB/HR

CUMULATIVE PERCENT PASSING
96.5
87.8
66.5
39.4
17.2
4.2
1.6
1.4

.....CIRCUIT PRODUCT.....

WATER 11.4 LB/HR

COAL 1321.5 LB/HR

CUMULATIVE PERCENT PASSING
72.8
44.0
18.3
11.6

.....VENT.....

WATER 34.0 LB/HR

COAL -257.0 LB/HR

MASS BALANCE.

ERDA AIRSWEPT BALL MILL

TEST INFORMATION

TEST NO.	15 A	DATE.	10-7-77
COAL SOURCE.	GLENBURN	CLASS.	ANTHRACITE

PERCENT MOISTURE

FEED.	4.40	REJECTS.	2.14
CYCLONE.	1.09	DUST COLL.	2.02
CIRCUIT PRODUCT.	1.15		

MASS FLOW RATE (LB/HR)

CYCLONE.	765.0	DUST COLL.	58.0

TEMPERATURE (FAHRENHEIT)

MILL INLET.	360.0	MILL OUTLET.	190.0

.....CIRCUIT FEED.....

WATER 37.9 LB/HR

COAL 824.0 LB/HR

MICRONS	CUMULATIVE PERCENT PASSING
38100.	100.0
25400.	100.0
19000.	100.0
16000.	100.0
12700.	100.0
9510.	98.5
6350.	75.4
3360.	42.1
2380.	31.5
1190.	19.8
595.	13.9
297.	10.8
149.	8.9
74.	7.8
44.	7.5

.....REJECTS.....

WATER 1.5 LB/HR

COAL 71.4 LB/HR

CUMULATIVE PERCENT PASSING
100.0
100.0
99.7
96.7
80.2
38.5
12.0
6.0

.....CIRCUIT PRODUCT.....

WATER 9.5 LB/HR

COAL 813.4 LB/HR

CUMULATIVE PERCENT PASSING
98.3
90.2
54.6
27.0

.....VENT.....

WATER 28.4 LB/HR

COAL 10.5 LB/HR

MASS BALANCE.

ERDA AIRSWEPT BALL MILL

TEST INFORMATION

TEST NO.	15 B	DATE.	10-7-77
COAL SOURCE.	GLENBURN	CLASS.	ANTHRACITE

PERCENT MOISTURE

FEED.	3.90	REJECTS.	2.16
CYCLONE.	1.11	DUST COLL.	1.94
CIRCUIT PRODUCT.	1.14		

MASS FLOW RATE (LB/HR)

CYCLONE.	773.0	DUST COLL.	34.0

TEMPERATURE (FAHRENHEIT)

MILL INLET.	355.0	MILL OUTLET.	185.0

.....CIRCUIT FEED.....

WATER 34.3 LB/HR

COAL 845.6 LB/HR

MICRONS	CUMULATIVE PERCENT PASSING
38100.	100.0
25400.	100.0
19000.	100.0
16000.	100.0
12700.	100.0
9510.	98.5
6350.	75.4
3360.	42.1
2380.	31.5
1190.	19.8
595.	13.9
297.	10.8
149.	8.9
74.	7.8
44.	7.5

.....REJECTS.....

WATER 1.7 LB/HR

COAL 79.2 LB/HR

CUMULATIVE PERCENT PASSING
100.0
100.0
100.0
99.8
97.0
78.7
33.2
8.4
3.9

.....CIRCUIT PRODUCT.....

WATER 9.2 LB/HR

COAL 797.7 LB/HR

CUMULATIVE PERCENT PASSING
96.8
77.7
38.0
24.5

.....VENT.....

WATER 25.0 LB/HR

COAL 47.9 LB/HR

MASS BALANCE.

ERDA AIRSWEPT BALL MILL

TEST INFORMATION

TEST NO.	15 C	DATE.	10-7-77
COAL SOURCE.	GLENBURN	CLASS.	ANTHRACITE

PERCENT MOISTURE

FEED.	4.50	REJECTS.	2.02
CYCLONE.	1.31	DUST COLL.	1.44
CIRCUIT PRODUCT.	1.31		

MASS FLOW RATE (LB/HR)

CYCLONE.	773.0	DUST COLL.	62.0

TEMPERATURE (FAHRENHEIT)

MILL INLET.	360.0	MILL OUTLET.	190.0

.....CIRCUIT FEED.....

WATER 39.6 LB/HR

COAL 840.4 LB/HR

MICRONS	CUMULATIVE PERCENT PASSING
38100.	100.0
25400.	100.0
19000.	100.0
16000.	100.0
12700.	100.0
9510.	98.5
6350.	75.4
3360.	42.1
2380.	31.5
1190.	19.8
595.	13.9
297.	10.8
149.	8.9
74.	7.8
44.	7.5

.....REJECTS.....

WATER 1.8 LB/HR

COAL 88.1 LB/HR

CUMULATIVE PERCENT PASSING
100.0
100.0
99.2
95.9
82.1
33.4
5.9
2.4

.....CIRCUIT PRODUCT.....

WATER 11.0 LB/HR

COAL 823.9 LB/HR

CUMULATIVE PERCENT PASSING
98.0
87.7
45.8
30.5

.....VENT.....

WATER 28.5 LB/HR

COAL 16.4 LB/HR

MASS BALANCE.

ERDA AIRSWEPT BALL MILL

TEST INFORMATION

TEST NO.	16 A	DATE.	10-7-77
COAL SOURCE.	GLENBURN	CLASS.	ANTHRACITE

PERCENT MOISTURE

FEED.	5.40	REJECTS.	1.64
CYCLONE.	0.90	DUST COLL.	1.06
CIRCUIT PRODUCT.	0.91		

MASS FLOW RATE (LB/HR)

CYCLONE.	750.0	DUST COLL.	69.0

TEMPERATURE (FAHRENHEIT)

MILL INLET.	335.0	MILL OUTLET.	190.0

.....CIRCUIT FEED.....

WATER 45.1 LB/HR

COAL 791.8 LB/HR

MICRONS	CUMULATIVE PERCENT PASSING
38100.	100.0
25400.	100.0
19000.	100.0
16000.	100.0
12700.	100.0
9510.	98.0
6350.	55.5
3360.	18.1
2380.	12.2
1190.	8.2
595.	6.7
297.	6.0
149.	5.6
74.	5.3
44.	5.2

.....REJECTS.....

WATER 0.6 LB/HR

COAL 40.3 LB/HR

CUMULATIVE PERCENT PASSING
100.0
100.0
100.0
100.0
99.9
99.4
91.5
51.7
15.9
8.1

.....CIRCUIT PRODUCT.....

WATER 7.4 LB/HR

COAL 811.5 LB/HR

CUMULATIVE PERCENT PASSING
99.5
91.7
60.6
41.8

.....VENT.....

WATER 37.7 LB/HR

COAL -19.7 LB/HR

MASS BALANCE.

ERDA AIRSWEPT BALL MILL

TEST INFORMATION

TEST NO.	16 B	DATE.	10-7-77
COAL SOURCE.	GLENBURN	CLASS.	ANTHRACITE

PERCENT MOISTURE

FEED.	4.60	REJECTS.	1.74
CYCLONE.	1.03	DUST COLL.	0.93
CIRCUIT PRODUCT.	1.02		

MASS FLOW RATE (LB/HR)

CYCLONE.	720.0	DUST COLL.	51.0

TEMPERATURE (FAHRENHEIT)

MILL INLET.	350.0	MILL OUTLET.	190.0

.....CIRCUIT FEED.....

WATER 34.8 LB/HR

COAL 723.1 LB/HR

MICRONS	CUMULATIVE PERCENT PASSING
38100.	100.0
25400.	100.0
19000.	100.0
16000.	100.0
12700.	100.0
9510.	98.0
6350.	55.5
3360.	18.1
2380.	12.2
1190.	8.2
595.	6.7
297.	6.0
149.	5.6
74.	5.3
44.	5.2

.....REJECTS.....

WATER 0.8 LB/HR

COAL 46.1 LB/HR

CUMULATIVE PERCENT PASSING
100.0
100.0
100.0
99.9
98.9
92.2
47.0
15.8
7.1

.....CIRCUIT PRODUCT.....

WATER 7.8 LB/HR

COAL 763.1 LB/HR

CUMULATIVE PERCENT PASSING
98.8
92.6
61.8
38.7

.....VENT.....

WATER 26.9 LB/HR

COAL -39.9 LB/HR

MASS BALANCE.

ERDA AIRSWEPT BALL MILL

TEST INFORMATION

TEST NO.	16 C	DATE.	10-7-77
COAL SOURCE.	GLENBURN	CLASS.	ANTHRACITE

PERCENT MOISTURE

FEED.	5.40	REJECTS.	1.73
CYCLONE.	1.15	DUST COLL.	1.07
CIRCUIT PRODUCT.	1.14		

MASS FLOW RATE (LB/HR)

CYCLONE.	720.0	DUST COLL.	60.0

TEMPERATURE (FAHRENHEIT)

MILL INLET.	355.0	MILL OUTLET.	190.0

.....CIRCUIT FEED.....

WATER 40.6 LB/HR

COAL 712.3 LB/HR

MICRONS	CUMULATIVE PERCENT PASSING
38100.	100.0
25400.	100.0
19000.	100.0
16000.	100.0
12700.	100.0
9510.	98.0
6350.	55.5
3360.	18.1
2380.	12.2
1190.	8.2
595.	6.7
297.	6.0
149.	5.6
74.	5.3
44.	5.2

.....REJECTS.....

WATER 0.9 LB/HR

COAL 53.0 LB/HR

CUMULATIVE PERCENT PASSING
100.0
100.0
100.0
99.5
99.3
92.2
57.5
21.5
8.0

.....CIRCUIT PRODUCT.....

WATER 8.9 LB/HR

COAL 771.0 LB/HR

CUMULATIVE PERCENT PASSING
99.5
90.4
61.7
38.7

.....VENT.....

WATER 31.7 LB/HR

COAL -58.7 LB/HR

MASS BALANCE.

ERDA 72052

TEST INFORMATION
TEST NO. 1 A DATE. 11-8-77
COAL SOURCE. WEST KY NO.9 CLASS. BITUMINOUS

PERCENT MOISTURE

FEED.	12.40	REJECTS.	2.03
CYCLONE.	1.60	DUST COLL.	2.73
CIRCUIT PRODUCT.	1.66		

MASS FLOW RATE (LB/HR)

CYCLONE.	665.0	DUST COLL.	41.0

TEMPERATURE (FAHRENHEIT)

MILL INLET.	405.0	MILL OUTLET.	185.0

.....CIRCUIT FEED.....

WATER 102.5 LB/HR

COAL 724.4 LB/HR

MICRONS	CUMULATIVE PERCENT PASSING
38100.	100.0
25400.	100.0
19000.	92.6
16000.	85.0
12700.	70.3
9510.	61.9
6350.	43.5
3360.	28.9
2380.	23.4
1190.	16.3
595.	12.8
297.	11.0
149.	9.9
74.	8.6
44.	8.4

.....REJECTS.....

WATER 7.7 LB/HR

COAL 372.2 LB/HR

CUMULATIVE PERCENT PASSING
100.0
100.0
99.8
98.8
95.6
82.1
45.8
22.6

.....CIRCUIT PRODUCT.....

WATER 11.7 LB/HR

COAL 694.2 LB/HR

CUMULATIVE PERCENT PASSING
99.0
97.0
87.5
71.7

.....VENT.....

WATER 90.7 LB/HR

COAL 30.2 LB/HR

MASS BALANCE.

ERDA 72052

TEST INFORMATION
TEST NO. 1 B
COAL SOURCE. WEST KY NO.9
DATE. 11-8-77
CLASS. BITUMINOUS

PERCENT MOISTURE
FEED. 13.80
CYCLONE. 1.45
CIRCUIT PRODUCT. 1.51
REJECTS. 1.78
DUST COLL. 2.58

MASS FLOW RATE (LB/HR)
CYCLONE. 660.0
DUST COLL. 39.0

TEMPERATURE (FAHRENHEIT)
MILL INLET. 355.0
MILL OUTLET. 185.0

.....CIRCUIT FEED.....

WATER 112.0 LB/HR

COAL 699.9 LB/HR

MICRONS	CUMULATIVE PERCENT PASSING
38100.	100.0
25400.	100.0
19000.	92.6
16000.	85.0
12700.	70.3
9510.	61.9
6350.	43.5
3360.	28.9
2380.	23.4
1190.	16.3
595.	12.8
297.	11.0
149.	9.9
74.	8.6
44.	8.4

.....REJECTS.....

WATER 5.6 LB/HR

COAL 309.3 LB/HR

CUMULATIVE PERCENT PASSING
100.0
100.0
99.9
99.2
95.4
77.0
32.7
21.1

.....CIRCUIT PRODUCT.....

WATER 10.5 LB/HR

COAL 688.4 LB/HR

CUMULATIVE PERCENT PASSING
99.1
97.4
86.8
71.8

.....VENT.....

WATER 101.4 LB/HR

COAL 11.5 LB/HR

MASS BALANCE.

ERDA 72052

TEST INFORMATION
TEST NO. 1 C DATE. 11-8-77
COAL SOURCE. WEST KY NO.9 CLASS. BITUMINOUS

PERCENT MOISTURE

FEED.	14.40	REJECTS.	2.39
CYCLONE.	1.19	DUST COLL.	2.37
CIRCUIT PRODUCT.	1.26		

MASS FLOW RATE (LB/HR)

CYCLONE.	658.0	DUST COLL.	43.0

TEMPERATURE (FAHRENHEIT)

MILL INLET.	365.0	MILL OUTLET.	185.0

.....CIRCUIT FEED.....

WATER 122.8 LB/HR

COAL 730.1 LB/HR

MICRONS	CUMULATIVE PERCENT PASSING
38100.	100.0
25400.	100.0
19000.	92.6
16000.	85.0
12700.	70.3
9510.	61.9
6350.	43.5
3360.	28.9
2380.	23.4
1190.	16.3
595.	12.8
297.	11.0
149.	9.9
74.	8.6
44.	8.4

.....REJECTS.....

WATER 8.2 LB/HR

COAL 336.7 LB/HR

CUMULATIVE PERCENT PASSING
100.0
100.0
99.8
98.6
96.5
85.2
40.7
31.5

.....CIRCUIT PRODUCT.....

WATER 8.8 LB/HR

COAL 692.1 LB/HR

CUMULATIVE PERCENT PASSING
99.0
98.1
90.2
74.1

.....VENT.....

WATER 113.9 LB/HR

COAL 38.0 LB/HR

MASS BALANCE.

ERDA 72052

TEST INFORMATION
TEST NO. 2 A DATE. 11-9-77
COAL SOURCE. WEST KY NO.9 CLASS. BITUMINOUS

PERCENT MOISTURE
FEED. 14.60 REJECTS. 2.17
CYCLONE. 1.90 DUST COLL. 2.32
CIRCUIT PRODUCT. 1.92

MASS FLOW RATE (LB/HR)
CYCLONE. 715.0 DUST COLL. 43.0

TEMPERATURE (FAHRENHEIT)
MILL INLET. 415.0 MILL OUTLET. 180.0

.....CIRCUIT FEED.....

WATER 130.8 LB/HR

COAL 765.1 LB/HR

MICRONS	CUMULATIVE PERCENT PASSING
38100.	100.0
25400.	100.0
19000.	84.5
16000.	78.0
12700.	69.1
9510.	61.3
6350.	40.0
3360.	30.2
2380.	26.3
1190.	21.5
595.	18.7
297.	17.1
149.	15.9
74.	14.4
44.	12.8

.....REJECTS.....

WATER 9.9 LB/HR

COAL 448.0 LB/HR

CUMULATIVE PERCENT PASSING
100.0
100.0
99.9
99.4
97.7
80.9
33.2
19.3

.....CIRCUIT PRODUCT.....

WATER 14.5 LB/HR

COAL 743.4 LB/HR

CUMULATIVE PERCENT PASSING
99.4
97.8
88.2
49.3

.....VENT.....

WATER 116.2 LB/HR

COAL 21.7 LB/HR

MASS BALANCE.

ERDA 72052

TEST INFORMATION
TEST NO. 2 B DATE. 11-9-77
COAL SOURCE. WEST KY NO.9 CLASS. BIYUMINOUS

PERCENT MOISTURE

FEED.	14.80	REJECTS.	2.03
CYCLONE.	2.05	DUST COLL.	2.59
CIRCUIT PRODUCT.	2.07		

MASS FLOW RATE (LB/HR)

CYCLONE.	780.0	DUST COLL.	37.0

TEMPERATURE (FAHRENHEIT)

MILL INLET.	420.0	MILL OUTLET.	175.0

.....CIRCUIT FEED.....

WATER 142.2 LB/HR

COAL 818.7 LB/HR

MICRONS	CUMULATIVE PERCENT PASSING
38100.	100.0
25400.	100.0
19000.	84.5
16000.	78.0
12700.	69.1
9510.	61.3
6350.	40.0
3360.	30.2
2380.	26.3
1190.	21.5
595.	18.7
297.	17.1
149.	15.9
74.	14.4
44.	12.8

.....REJECTS.....

WATER 11.7 LB/HR

COAL 568.2 LB/HR

CUMULATIVE PERCENT PASSING
100.0
100.0
99.2
98.7
95.6
72.5
34.1
23.0

.....CIRCUIT PRODUCT.....

WATER 16.9 LB/HR

COAL 800.0 LB/HR

CUMULATIVE PERCENT PASSING
99.4
98.2
89.5
71.6

.....VENT.....

WATER 125.2 LB/HR

COAL 18.7 LB/HR

MASS BALANCE.

MC KEE AIR SWEPT E-MILL

TEST INFORMATION
TEST NO. 1 A DATE. 12-14-77
COAL SOURCE. MONTEREY CLASS. BITUMINOUS

PERCENT MOISTURE

FEED.	19.20	REJECTS.	0.00
CYCLONE.	5.10	DUST COLL.	5.10
CIRCUIT PRODUCT.	5.09		

MASS FLOW RATE (LB/HR)

CYCLONE.	292.0	DUST COLL.	12.0

TEMPERATURE (FAHRENHEIT)

MILL INLET.	240.0	MILL OUTLET.	160.0

.....CIRCUIT FEED.....

WATER 57.5 LB/HR

COAL 242.4 LB/HR

MICRONS	CUMULATIVE PERCENT PASSING
38100.	100.0
25400.	100.0
19000.	100.0
16000.	99.7
12700.	99.5
9510.	97.2
6350.	89.0
3360.	72.7
2380.	62.0
1190.	43.1
595.	29.5
297.	21.2
149.	16.8
74.	14.6
44.	14.0

.....REJECTS.....

WATER 0.0 LB/HR

COAL 0.0 LB/HR

CUMULATIVE PERCENT PASSING
0.0
0.0
0.0
0.0
0.0

.....CIRCUIT PRODUCT.....

WATER 15.5 LB/HR

COAL 288.4 LB/HR

CUMULATIVE PERCENT PASSING
72.9
44.5
22.2
13.3

.....VENT.....

WATER 42.0 LB/HR

COAL -46.0 LB/HR

MASS BALANCE.

MC KEE AIR SWEPT E-MILL

TEST INFORMATION
TEST NO. 1 B DATE. 12-14-77
COAL SOURCE. MONTEREY CLASS. BITUMINOUS

PERCENT MOISTURE

FEED.	19.20	REJECTS.	0.00
CYCLONE.	5.80	DUST COLL.	5.80
CIRCUIT PRODUCT.	5.79		

MASS FLOW RATE (LB/HR)

CYCLONE.	456.0	DUST COLL.	29.0

TEMPERATURE (FAHRENHEIT)

MILL INLET.	280.0	MILL OUTLET.	160.0

.....CIRCUIT FEED.....

WATER 96.0 LB/HR

COAL 404.0 LB/HR

MICRONS	CUMULATIVE PERCENT PASSING
38100.	100.0
25400.	100.0
19000.	100.0
16000.	99.7
12700.	99.5
9510.	97.2
6350.	89.0
3360.	72.7
2380.	62.0
1190.	43.1
595.	29.5
297.	21.2
149.	16.8
74.	14.6
44.	14.0

.....REJECTS.....

WATER 0.0 LB/HR

COAL 0.0 LB/HR

CUMULATIVE PERCENT PASSING
0.0
0.0
0.0
0.0
0.0

.....CIRCUIT PRODUCT.....

WATER 28.1 LB/HR

COAL 456.8 LB/HR

CUMULATIVE PERCENT PASSING
66.0
37.3
20.9
13.0

.....VENT.....

WATER 67.8 LB/HR

COAL -52.8 LB/HR

MASS BALANCE.

MC KEE AIR SWEPT E-MILL

TEST INFORMATION
TEST NO. 1 C DATE. 12-14-77
COAL SOURCE. MONTEREY CLASS. BITUMINOUS

PERCENT MOISTURE

FEED.	19.20	REJECTS.	0.00
CYCLONE.	2.10	DUST COLL.	0.00
CIRCUIT PRODUCT.	2.09		

MASS FLOW RATE (LB/HR)

CYCLONE.	615.0	DUST COLL.	0.0

TEMPERATURE (FAHRENHEIT)

MILL INLET.	360.0	MILL OUTLET.	165.0

.....CIRCUIT FEED.....

WATER 134.3 LB/HR

COAL 565.6 LB/HR

MICRONS	CUMULATIVE PERCENT PASSING
38100.	100.0
25400.	100.0
19000.	100.0
16000.	99.7
12700.	99.5
9510.	97.2
6350.	89.0
3360.	72.7
2380.	62.0
1190.	43.1
595.	29.5
297.	21.2
149.	16.8
74.	14.6
44.	14.0

.....REJECTS.....

WATER 0.0 LB/HR

COAL 0.0 LB/HR

CUMULATIVE PERCENT PASSING
0.0
0.0
0.0
0.0
0.0

.....CIRCUIT PRODUCT.....

WATER 12.9 LB/HR

COAL 602.0 LB/HR

CUMULATIVE PERCENT PASSING
41.5
39.2
38.0
37.0

.....VENT.....

WATER 121.4 LB/HR

COAL -36.4 LB/HR

MASS BALANCE.

MC KEE AIR SWEPT E-MILL

TEST INFORMATION
TEST NO. 2 A DATE. 12-15-77
COAL SOURCE. MONTEREY CLASS. BITUMINOUS

PERCENT MOISTURE

FEED.	18.60	REJECTS.	0.00
CYCLONE.	4.80	DUST COLL.	4.80
CIRCUIT PRODUCT.	4.79		

MASS FLOW RATE (LB/HR)

CYCLONE.	600.0	DUST COLL.	45.0

TEMPERATURE (FAHRENHEIT)

MILL INLET.	300.0	MILL OUTLET.	155.0

.....CIRCUIT FEED.....

WATER 130.2 LB/HR

COAL 569.8 LB/HR

MICRONS	CUMULATIVE PERCENT PASSING
38100.	100.0
25400.	100.0
19000.	100.0
16000.	99.2
12700.	95.5
9510.	91.7
6350.	73.1
3360.	55.5
2380.	47.9
1190.	36.5
595.	28.3
297.	22.6
149.	18.4
74.	17.1
44.	16.6

.....REJECTS.....

WATER 0.0 LB/HR

COAL 0.0 LB/HR

CUMULATIVE PERCENT PASSING
0.0
0.0
0.0
0.0
0.0
0.0
0.0

.....CIRCUIT PRODUCT.....

WATER 30.9 LB/HR

COAL 614.0 LB/HR

CUMULATIVE PERCENT PASSING
79.0
51.5
30.4
21.4

.....VENT.....

WATER 99.2 LB/HR

COAL -44.2 LB/HR

MASS BALANCE.

MC KEE AIR SWEPT E-MILL

TEST INFORMATION
TEST NO. 2 B DATE. 12-15-77
COAL SOURCE. MONTEREY CLASS. BITUMINOUS

PERCENT MOISTURE

FEED.	18.60	REJECTS.	0.00
CYCLONE.	4.50	DUST COLL.	4.50
CIRCUIT PRODUCT.	4.50		

MASS FLOW RATE (LB/HR)

CYCLONE.	810.0	DUST COLL.	52.5

TEMPERATURE (FAHRENHEIT)

MILL INLET.	360.0	MILL OUTLET.	160.0

.....CIRCUIT FEED.....

WATER 167.3 LB/HR

COAL 732.6 LB/HR

MICRONS	CUMULATIVE PERCENT PASSING
38100.	100.0
25400.	100.0
19000.	100.0
16000.	99.2
12700.	95.5
9510.	91.7
6350.	73.1
3360.	55.5
2380.	47.9
1190.	36.5
595.	28.3
297.	22.6
149.	18.4
74.	17.1
44.	16.6

.....REJECTS.....

WATER 0.0 LB/HR

COAL 0.0 LB/HR

CUMULATIVE PERCENT PASSING
0.0
0.0
0.0
0.0
0.0
0.0
0.0

.....CIRCUIT PRODUCT.....

WATER 38.8 LB/HR

COAL 823.6 LB/HR

CUMULATIVE PERCENT PASSING
86.5
59.4
33.6
22.7

.....VENT.....

WATER 128.5 LB/HR

COAL -91.0 LB/HR

MASS BALANCE.

MC KEE AIR SWEPT E-MILL

TEST INFORMATION
TEST NO. 3 A
COAL SOURCE. MONTEREY
DATE. 12-16-77
CLASS. BITUMINOUS

PERCENT MOISTURE

FEED.	19.00	REJECTS.	0.00
CYCLONE.	6.10	DUST COLL.	6.10
CIRCUIT PRODUCT.	6.09		

MASS FLOW RATE (LB/HR)

CYCLONE.	765.0	DUST COLL.	45.0

TEMPERATURE (FAHRENHEIT)

MILL INLET.	340.0	MILL OUTLET.	165.0

.....CIRCUIT FEED.....

WATER 171.0 LB/HR

COAL 729.0 LB/HR

MICRONS	CUMULATIVE PERCENT PASSING
38100.	100.0
25400.	100.0
19000.	100.0
16000.	98.0
12700.	80.0
9510.	65.2
6350.	43.3
3360.	30.5
2380.	25.7
1190.	19.6
595.	15.6
297.	12.8
149.	10.8
74.	9.8
44.	9.5

.....REJECTS.....

WATER 0.0 LB/HR

COAL 0.0 LB/HR

CUMULATIVE PERCENT PASSING
0.0
0.0
0.0
0.0
0.0

.....CIRCUIT PRODUCT.....

WATER 49.4 LB/HR

COAL 760.5 LB/HR

CUMULATIVE PERCENT PASSING
71.3
41.1
22.3
15.3

.....VENT.....

WATER 121.5 LB/HR

COAL -31.5 LB/HR

MASS BALANCE.

MC KEE AIR SWEPT E-MILL

TEST INFORMATION
TEST NO. 3 B DATE. 12-16-77
COAL SOURCE. MONTEREY CLASS. BITUMINOUS

PERCENT MOISTURE
FEED. 19.00 REJECTS. 0.00
CYCLONE. 3.50 DUST COLL. 3.50
CIRCUIT PRODUCT. 3.50

MASS FLOW RATE (LB/HR)
CYCLONE. 765.0 DUST COLL. 45.0

TEMPERATURE (FAHRENHEIT)
MILL INLET. 355.0 MILL OUTLET. 165.0

.....CIRCUIT FEED.....

WATER 171.0 LB/HR

COAL 729.0 LB/HR

MICRONS	CUMULATIVE PERCENT PASSING
38100.	100.0
25400.	100.0
19000.	100.0
16000.	98.0
12700.	80.0
9510.	65.2
6350.	43.3
3360.	30.5
2380.	25.7
1190.	19.6
595.	15.6
297.	12.8
149.	10.8
74.	9.8
44.	9.5

.....REJECTS.....

WATER 0.0 LB/HR

COAL 0.0 LB/HR

CUMULATIVE PERCENT PASSING
0.0
0.0
0.0
0.0
0.0
0.0

.....CIRCUIT PRODUCT.....

WATER 28.3 LB/HR

COAL 781.6 LB/HR

CUMULATIVE PERCENT PASSING
86.0
61.8
36.5
23.7

.....VENT.....

WATER 142.6 LB/HR

COAL -52.6 LB/HR

MASS BALANCE.

MC KEE AIR SWEPT E-MILL

TEST INFORMATION
TEST NO. 3 C
COAL SOURCE. MONTEREY
DATE. 12-16-77
CLASS. BITUMINOUS

PERCENT MOISTURE

FEED.	19.00	REJECTS.	0.00
CYCLONE.	4.90	DUST COLL.	4.90
CIRCUIT PRODUCT.	4.89		

MASS FLOW RATE (LB/HR)

CYCLONE.	940.0	DUST COLL.	60.0

TEMPERATURE (FAHRENHEIT)

MILL INLET.	358.0	MILL OUTLET.	160.0

.....CIRCUIT FEED.....

WATER 209.0 LB/HR

COAL 891.0 LB/HR

MICRONS	CUMULATIVE PERCENT PASSING
38100.	100.0
25400.	100.0
19000.	100.0
16000.	98.0
12700.	80.0
9510.	65.2
6350.	43.3
3360.	30.5
2380.	25.7
1190.	19.6
595.	15.6
297.	12.8
149.	10.8
74.	9.8
44.	9.5

.....REJECTS.....

WATER 0.0 LB/HR

COAL 0.0 LB/HR

CUMULATIVE PERCENT PASSING
0.0
0.0
0.0
0.0
0.0
0.0
0.0
0.0

.....CIRCUIT PRODUCT.....

WATER 48.9 LB/HR

COAL 951.0 LB/HR

CUMULATIVE PERCENT PASSING
81.1
51.5
28.5
18.1

.....VENT.....

WATER 160.0 LB/HR

COAL -60.0 LB/HR

MASS BALANCE.

MC KEE AIR SWEPT E-MILL

TEST INFORMATION
TEST NO. 3 D DATE. 12-16-77
COAL SOURCE. MONTEREY CLASS. BITUMINOUS

PERCENT MOISTURE
FEED. 19.00 REJECTS. 0.00
CYCLONE. 3.10 DUST COLL. 3.10
CIRCUIT PRODUCT. 3.09

MASS FLOW RATE (LB/HR)
CYCLONE. 1005.0 DUST COLL. 52.5

TEMPERATURE (FAHRENHEIT)
MILL INLET. 440.0 MILL OUTLET. 180.0

.....CIRCUIT FEED.....

WATER 209.0 LB/HR

COAL 891.0 LB/HR

MICRONS	CUMULATIVE PERCENT PASSING
38100.	100.0
25400.	100.0
19000.	100.0
16000.	98.0
12700.	80.0
9510.	65.2
6350.	43.3
3360.	30.5
2380.	25.7
1190.	19.6
595.	15.6
297.	12.8
149.	10.8
74.	9.8
44.	9.5

.....REJECTS.....

WATER 0.0 LB/HR

COAL 0.0 LB/HR

CUMULATIVE PERCENT PASSING
0.0
0.0
0.0
0.0
0.0
0.0

.....CIRCUIT PRODUCT.....

WATER 32.7 LB/HR

COAL 1024.7 LB/HR

CUMULATIVE PERCENT PASSING
86.0
61.6
32.5
19.2

.....VENT.....

WATER 176.2 LB/HR

COAL -133.7 LB/HR

MASS BALANCE.

MC KEE AIR SWEPT E-MILL

TEST INFORMATION
TEST NO. 3 F DATE. 12-16-77
COAL SOURCE. MONTEREY CLASS. BITUMINOUS

PERCENT MOISTURE

FEED.	19.00	REJECTS.	0.00
CYCLONE.	2.80	DUST COLL.	2.80
CIRCUIT PRODUCT.	2.79		

MASS FLOW RATE (LB/HR)

CYCLONE.	810.0	DUST COLL.	38.0

TEMPERATURE (FAHRENHEIT)

MILL INLET.	430.0	MILL OUTLET.	175.0

.....CIRCUIT FEED.....

WATER 171.0 LB/HR

COAL 729.0 LB/HR

MICRONS	CUMULATIVE PERCENT PASSING
38100.	100.0
25400.	100.0
19000.	100.0
16000.	98.0
12700.	80.0
9510.	65.2
6350.	43.3
3360.	30.5
2380.	25.7
1190.	19.6
595.	15.6
297.	12.8
149.	10.8
74.	9.8
44.	9.5

.....REJECTS.....

WATER 0.0 LB/HR

COAL 0.0 LB/HR

CUMULATIVE PERCENT PASSING
0.0
0.0
0.0
0.0
0.0
0.0

.....CIRCUIT PRODUCT.....

WATER 23.7 LB/HR

COAL 824.2 LB/HR

CUMULATIVE PERCENT PASSING
94.1
74.0
43.8
27.0

.....VENT.....

WATER 147.2 LB/HR

COAL -95.2 LB/HR

MASS BALANCE.

CARTER AIR SWEPT E-MILL

TEST INFORMATION
TEST NO. 4 A
COAL SOURCE. WYOMING
DATE. 12-16-77
CLASS. SUB-BITUMINOUS

PERCENT MOISTURE

FEED.	27.40	REJECTS.	0.00
CYCLONE.	6.80	DUST COLL.	6.80
CIRCUIT PRODUCT.	6.79		

MASS FLOW RATE (LB/HR)

CYCLONE.	315.0	DUST COLL.	22.5

TEMPERATURE (FAHRENHEIT)

MILL INLET.	330.0	MILL OUTLET.	155.0

.....CIRCUIT FEED.....

WATER 137.0 LB/HR

COAL 363.0 LB/HR

MICRONS	CUMULATIVE PERCENT PASSING
38100.	100.0
25400.	100.0
19000.	100.0
16000.	99.0
12700.	88.9
9510.	80.9
6350.	67.0
3360.	59.5
2380.	53.7
1190.	44.4
595.	36.8
297.	32.0
149.	28.8
74.	27.0
44.	26.2

.....REJECTS.....

WATER 0.0 LB/HR

COAL 0.0 LB/HR

CUMULATIVE PERCENT PASSING
0.0
0.0
0.0
0.0
0.0
0.0
0.0

.....CIRCUIT PRODUCT.....

WATER 22.9 LB/HR

COAL 314.5 LB/HR

CUMULATIVE PERCENT PASSING
85.4
56.2
33.7
23.8

.....VENT.....

WATER 114.0 LB/HR

COAL 48.4 LB/HR

MASS BALANCE.

CARTER AIR SWEPT E-MILL

TEST INFORMATION
TEST NO. 4 B
COAL SOURCE. WYOMING
DATE. 12-16-77
CLASS. SUB-BITUMINOUS

PERCENT MOISTURE

FEED.	27.40	REJECTS.	0.00
CYCLONE.	6.90	DUST COLL.	6.90
CIRCUIT PRODUCT.	6.89		

MASS FLOW RATE (LB/HR)

CYCLONE.	435.0	DUST COLL.	30.0

TEMPERATURE (FAHRENHEIT)

MILL INLET.	365.0	MILL OUTLET.	150.0

.....CIRCUIT FEED.....

WATER 164.3 LB/HR

COAL 435.6 LB/HR

MICRONS	CUMULATIVE PERCENT PASSING
38100.	100.0
25400.	100.0
19000.	100.0
16000.	99.0
12700.	88.9
9510.	80.9
6350.	67.0
3360.	59.5
2380.	53.7
1190.	44.4
595.	36.8
297.	32.0
149.	28.8
74.	27.0
44.	26.2

.....REJECTS.....

WATER 0.0 LB/HR

COAL 0.0 LB/HR

CUMULATIVE PERCENT PASSING
0.0
0.0
0.0
0.0
0.0
0.0
0.0

.....CIRCUIT PRODUCT.....

WATER 32.0 LB/HR

COAL 432.9 LB/HR

CUMULATIVE PERCENT PASSING
91.5
59.6
29.6
19.6

.....VENT.....

WATER 132.3 LB/HR

COAL 2.6 LB/HR

MASS BALANCE.

CARTER AIR SWEPT E-MILL

TEST INFORMATION
TEST NO. 4 C
COAL SOURCE. WYOMING
DATE. 12-19-77
CLASS. SUB-BITUMINOUS

PERCENT MOISTURE

FEED.	27.40	REJECTS.	0.00
CYCLONE.	5.40	DUST COLL.	5.40
CIRCUIT PRODUCT.	5.39		

MASS FLOW RATE (LB/HR)

CYCLONE.	450.0	DUST COLL.	23.0

TEMPERATURE (FAHRENHEIT)

MILL INLET.	475.0	MILL OUTLET.	170.0

.....CIRCUIT FEED.....

WATER 191.7 LB/HR

COAL 508.2 LB/HR

MICRONS	CUMULATIVE PERCENT PASSING
38100.	100.0
25400.	100.0
19000.	100.0
16000.	99.0
12700.	88.9
9510.	80.9
6350.	67.0
3360.	59.5
2380.	53.7
1190.	44.4
595.	36.8
297.	32.0
149.	28.8
74.	27.0
44.	26.2

.....REJECTS.....

WATER 0.0 LB/HR

COAL 0.0 LB/HR

CUMULATIVE PERCENT PASSING
0.0
0.0
0.0
0.0
0.0
0.0

.....CIRCUIT PRODUCT.....

WATER 25.5 LB/HR

COAL 447.4 LB/HR

CUMULATIVE PERCENT PASSING
95.1
72.6
42.0
26.6

.....VENT.....

WATER 166.2 LB/HR

COAL 60.7 LB/HR

MASS BALANCE.

CARTER AIR SWEPT E-MILL

TEST INFORMATION
TEST NO. 5 A
COAL SOURCE. WYOMING
DATE. 12-19-77
CLASS. SUB-BITUMINOUS

PERCENT MOISTURE

FEED.	29.40	REJECTS.	0.00
CYCLONE.	11.40	DUST COLL.	10.80
CIRCUIT PRODUCT.	11.38		

MASS FLOW RATE (LB/HR)

CYCLONE.	750.0	DUST COLL.	23.0

TEMPERATURE (FAHRENHEIT)

MILL INLET.	465.0	MILL OUTLET.	170.0

.....CIRCUIT FEED.....

WATER 264.6 LB/HR

COAL 635.4 LB/HR

MICRONS	CUMULATIVE PERCENT PASSING
38100.	100.0
25400.	100.0
19000.	100.0
16000.	96.0
12700.	68.7
9510.	54.7
6350.	33.6
3360.	22.6
2380.	18.8
1190.	14.7
595.	12.5
297.	11.2
149.	10.2
74.	9.5
44.	9.3

.....REJECTS.....

WATER 0.0 LB/HR

COAL 0.0 LB/HR

CUMULATIVE PERCENT PASSING
0.0
0.0
0.0
0.0
0.0
0.0

.....CIRCUIT PRODUCT.....

WATER 87.9 LB/HR

COAL 685.0 LB/HR

CUMULATIVE PERCENT PASSING
56.0
33.3
18.7
13.3

.....VENT.....

WATER 176.6 LB/HR

COAL -49.6 LB/HR

MASS BALANCE.

CARTER AIR SWEPT E-MILL

TEST INFORMATION
TEST NO. 5 B DATE. 12-19-77
COAL SOURCE. WYOMING CLASS. SUB-BITUMINOUS

PERCENT MOISTURE

FEED.	29.40	REJECTS.	0.00
CYCLONE.	11.20	DUST COLL.	10.80
CIRCUIT PRODUCT.	11.18		

MASS FLOW RATE (LB/HR)

CYCLONE.	570.0	DUST COLL.	15.0

TEMPERATURE (FAHRENHEIT)

MILL INLET.	515.0	MILL OUTLET.	185.0

.....CIRCUIT FEED.....

WATER 205.7 LB/HR

COAL 494.2 LB/HR

MICRONS	CUMULATIVE PERCENT PASSING
38100.	100.0
25400.	100.0
19000.	100.0
16000.	96.0
12700.	68.7
9510.	54.7
6350.	33.6
3360.	22.6
2380.	18.8
1190.	14.7
595.	12.5
297.	11.2
149.	10.2
74.	9.5
44.	9.3

.....REJECTS.....

WATER 0.0 LB/HR

COAL 0.0 LB/HR

CUMULATIVE PERCENT PASSING
0.0
0.0
0.0
0.0
0.0
0.0

.....CIRCUIT PRODUCT.....

WATER 65.4 LB/HR

COAL 519.5 LB/HR

CUMULATIVE PERCENT PASSING
46.7
28.3
16.8
12.2

.....VENT.....

WATER 140.3 LB/HR

COAL -25.3 LB/HR

MASS BALANCE.

CARTER AIR SWEPT E-MILL

TEST INFORMATION
TEST NO. 5 C
COAL SOURCE. WYOMING

DATE. 12-19-77
CLASS. SUB-BITUMINOUS

PERCENT MOISTURE

FEED.	29.40	REJECTS.	0.00
CYCLONE.	10.40	DUST COLL.	10.80
CIRCUIT PRODUCT.	10.42		

MASS FLOW RATE (LB/HR)

CYCLONE.	525.0	DUST COLL.	30.0

TEMPERATURE (FAHRENHEIT)

MILL INLET.	425.0	MILL OUTLET.	180.0

.....CIRCUIT FEED.....

WATER 205.7 LB/HR

COAL 494.2 LB/HR

MICRONS	CUMULATIVE PERCENT PASSING
38100.	100.0
25400.	100.0
19000.	100.0
16000.	96.0
12700.	68.7
9510.	54.7
6350.	33.6
3360.	22.6
2380.	18.8
1190.	14.7
595.	12.5
297.	11.2
149.	10.2
74.	9.5
44.	9.3

.....REJECTS.....

WATER 0.0 LB/HR

COAL 0.0 LB/HR

CUMULATIVE PERCENT PASSING
0.0
0.0
0.0
0.0
0.0
0.0
0.0
0.0
0.0
0.0

.....CIRCUIT PRODUCT.....

WATER 57.8 LB/HR

COAL 497.1 LB/HR

CUMULATIVE PERCENT PASSING
59.9
35.1
21.0
16.0

.....VENT.....

WATER 147.9 LB/HR

COAL -2.9 LB/HR

MASS BALANCE.

CARTER AIR SWEPT E-MILL

TEST INFORMATION
TEST NO. 5 D DATE. 12-19-77
COAL SOURCE. WYOMING CLASS. SUB-BITUMINOUS

PERCENT MOISTURE

FEED.	29.40	REJECTS.	0.00
CYCLONE.	7.20	DUST COLL.	10.80
CIRCUIT PRODUCT.	7.34		

MASS FLOW RATE (LB/HR)

CYCLONE.	525.0	DUST COLL.	22.0

TEMPERATURE (FAHRENHEIT)

MILL INLET.	470.0	MILL OUTLET.	205.0

.....CIRCUIT FEED.....

WATER 205.7 LB/HR

COAL 494.2 LB/HR

MICRONS	CUMULATIVE PERCENT PASSING
38100.	100.0
25400.	100.0
19000.	100.0
16000.	96.0
12700.	68.7
9510.	54.7
6350.	33.6
3360.	22.6
2380.	18.8
1190.	14.7
595.	12.5
297.	11.2
149.	10.2
74.	9.5
44.	9.3

.....REJECTS.....

WATER 0.0 LB/HR

COAL 0.0 LB/HR

CUMULATIVE PERCENT PASSING
0.0
0.0
0.0
0.0
0.0
0.0

.....CIRCUIT PRODUCT.....

WATER 40.1 LB/HR

COAL 506.8 LB/HR

CUMULATIVE PERCENT PASSING
60.4
34.0
18.2
13.2

.....VENT.....

WATER 165.6 LB/HR

COAL -12.6 LB/HR

During the dry ball mill testing, the energy consumption was considerably higher than predicted and erratic. The same behavior was observed when a non-coal mineral was ground in the same grinding system. This was done to insure that the problem was a mechanical one, not a process one. The dry ball mill was taken out of service and remachined and the lining reset.

The dry ball mill was returned to service and operated as an open circuit mechanical discharge grinding system on a non-coal mineral so that the common air sweeping system did not have to be changed again. The erratic behavior was not observed. The instrumentation necessary to test the high prediction was received and corrections made to the sensing device. The dry ball mill will be tested under load one more time before it is returned to coal service.

The ball and race mill grinding system shakedown was completed and benchmark tests were initiated. Coarse grinding runs were made on an Illinois #6 and a Wyoming sub-bituminous coals which were available. The computer summaries of these runs - 1A, 1B, 1C, 2A, 2B, 3A, 3B, 3C, 3D, 3E, 3F, 4A, 4B, 4C, 5A, 5B, 5C, 5D - follow. During run 2B, mechanical difficulties were encountered. The mill was torn down, several loose plates reset and the bolts tack welded.

These tests were followed by an attempt to feed the Lower Freeport coal, but feeding difficulties were encountered with this finer coal in the feed pipe to the mill. A Western Kentucky coal sample was prepared and used for additional testing. Again, mechanical difficulties involving the velocity adjustment plates were encountered. This time, the plates were welded in place.

Work Forecast

Benchmark tests will be continued on the ball and race mill grinding system. The dry ball mill will be operated with the 2' wide classifier and the twin cone classifier. The wet ball mill will be used to grind coal in oil. The hammer mill grinding system will undergo shakedown and benchmark testing.

3.2 Modifications

Work Accomplished

The classifier in the dry grinding mill product handling system was increased from 1' to 2' in width on the dry ball mill grinding system.

Drawings of the twin cone classifier, shown in the following sketch, and the duct work required for the dry ball mill grinding system were completed, checked and released for manufacture. Fabrication should take approximately three weeks. One of the drawings, 7-31724, follows.

Preliminary batch grinding of coal in oil compared to the grinding of coal in water has indicated that increased time, hence energy, is required. This effect may be attributable to several causes -

1) analysis error
2) a viscosity effect more pronounced for finer sizes
3) a lubricating effect

A laboratory testing campaign is underway to shed more light on the batch grinding results. However, it was also deemed desirable to check the results on a larger scale. Therefore, the wet ball mill system has been modified to conduct open circuit coal in oil grinding tests since it can operate independently of the common air sweeping system.

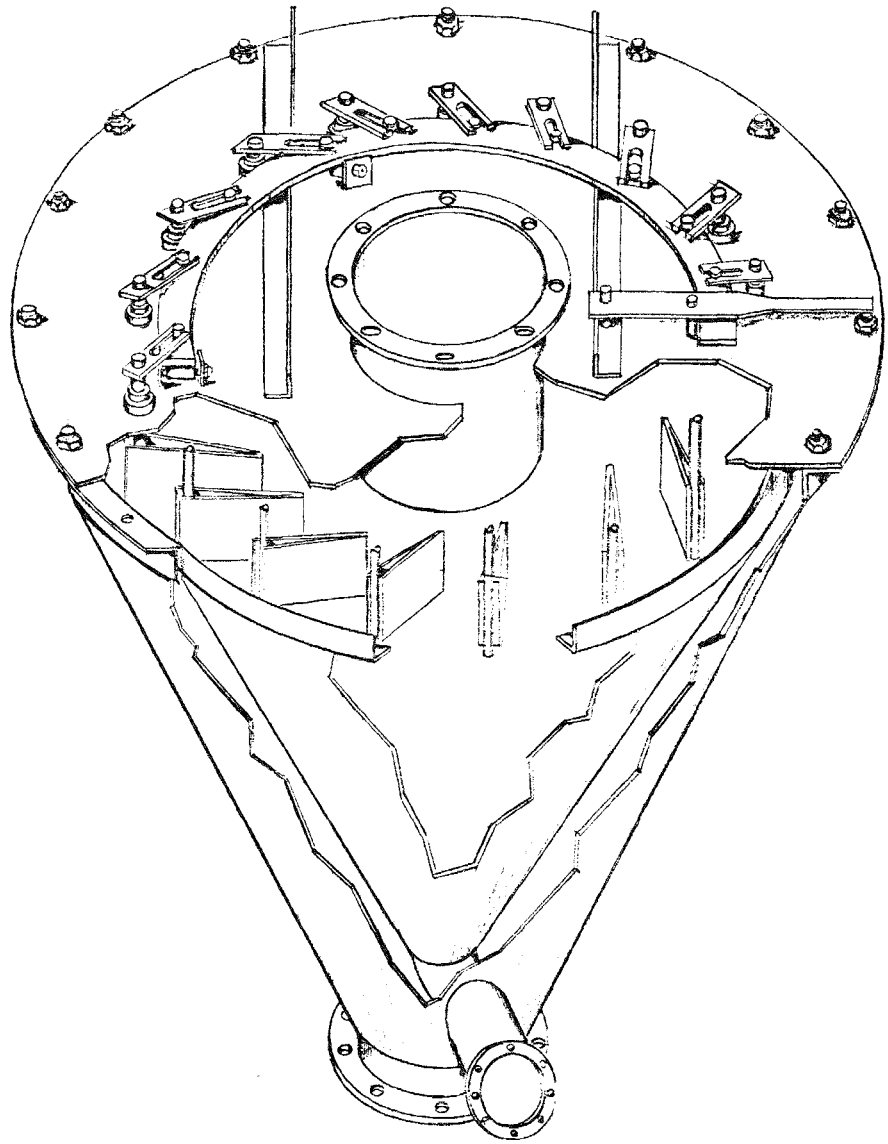

KENNEDY VAN SAUN MFG. & ENG. CORP. DANVILLE, PA. A SUBSIDIARY OF McNALLY PITTSBURGH	TITLE ISOMETRIC OF KVS TWIN CONE CLASSIFIER	PROJ.
		ORD.
THIS DRAWING IS K. V. S. PROPERTY FOR USE WITH K. V. S. WORK ONLY. ALL DESIGN & INVENTION RIGHTS RESERVED.		DWG. NO. 1-33538 A

REF	QUAN. ONE		DESCRIPTION	PATT. NO.	MATL.	PART NO.
1			ASS'Y TWIN CONE CLASSIFIER			7-31724-1
2	1		UPPER HOUSING WDM'T (EXISTING MODIFIED)			5-31717-1
3	1		LOWER HOUSING WDM'T (NEW)			5-31725-1
4	1		TRANSITION WDM'T (NEW)			5-31727-1
5	1		INNER CONE (EXISTING MODIFIED)			5-31726-1
6	36		BOLT-HEX HD. 1/2" Ø X 1 1/2" LG. W/(1)		S"L	
			HEX. NUT EA.			

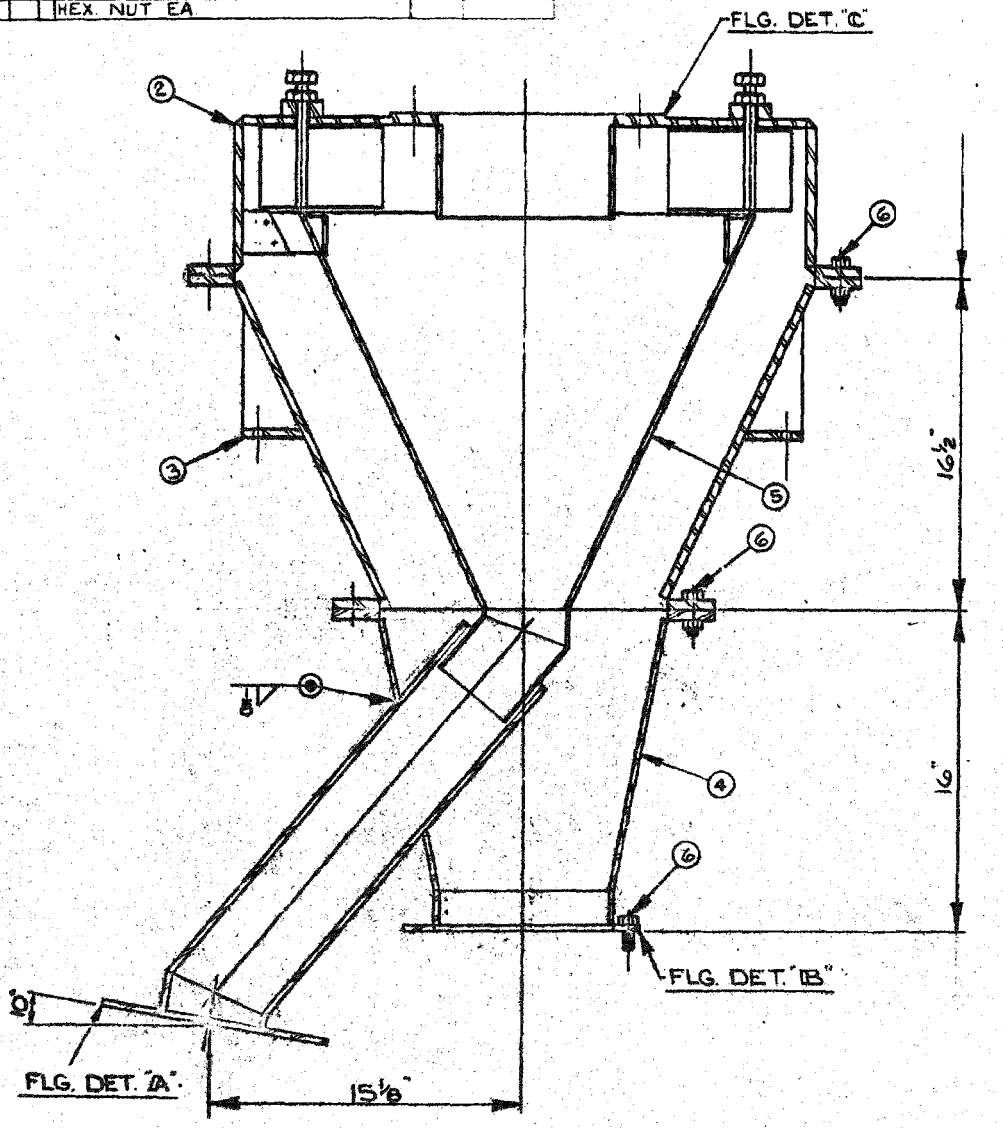

① ASS'Y.

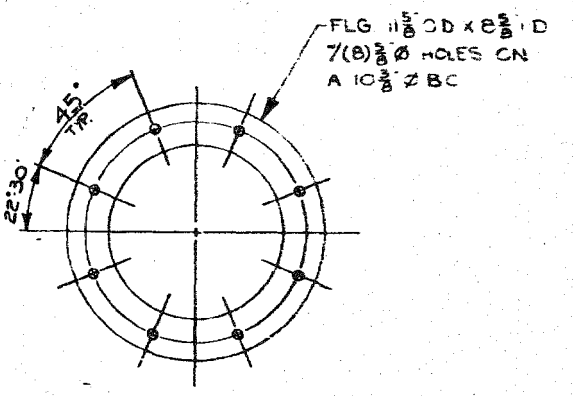

FLG. DET. "B"

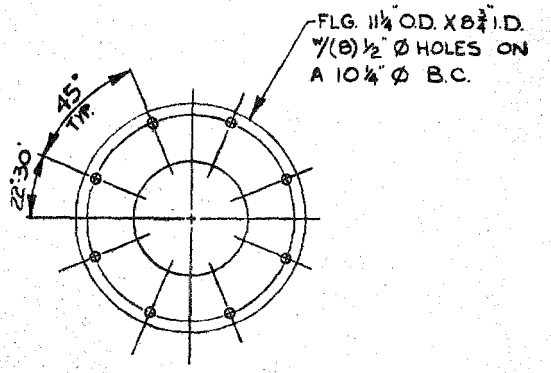

FLG. DET. "A"

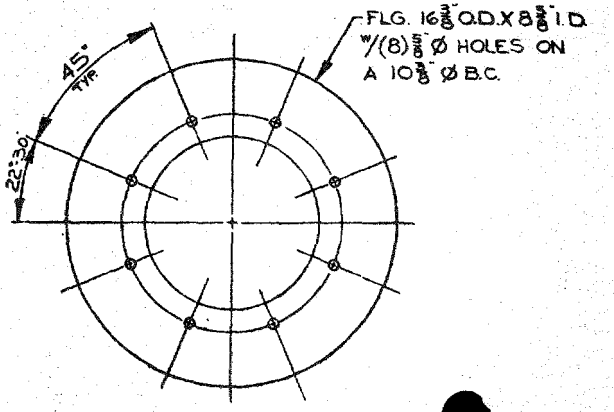

FLG. DET. "C"

Storage tanks for holding the oil were fabricated with internal heating coils. The lining of the pumps were changed along with minor piping modifications. The system is ready to conduct coal in oil grinding tests.

Work Forecast

The twin cone classifier will be manufactured and installed.

☆U.S. GOVERNMENT PRINTING OFFICE: 1978-740-420/236