BW10018-TR-4

HEAT RECOVERY AND SEED RECOVERY DEVELOPMENT PROJECT

Preliminary Design Report (PDR)

MASTER

Prepared by:

A.H. Arkett, Project Manager
K.C. Alexander, Engineer
A.D. Bolek, Engineer
B.K. Blackman, Engineer
P.E. Kurrle, Engineer
S.V. Tram, Engineer
A.M. Warren, Engineer
A.J. Ziobrowski, Engineer
Babcock & Wilcox
a McDermott company
Fossil Power Generation Division
Barberton, Ohio 44203

Submitted by:

Babcock & Wilcox
a McDermott company
Contract Research Division, Barberton
P.O. Box 351
Barberton, Ohio 44203

Date Published:

June 1, 1981

Prepared for:

The United States Department of Energy
DOE Contract No. DE-AC02-79CH10018
B&W Contract No. CRD-1038

00293X R.P.

DISTRIBUTION OF THIS DOCUMENT IS UNLIMITED

DISCLAIMER

This report was prepared as an account of work sponsored by an agency of the United States Government. Neither the United States Government nor any agency Thereof, nor any of their employees, makes any warranty, express or implied, or assumes any legal liability or responsibility for the accuracy, completeness, or usefulness of any information, apparatus, product, or process disclosed, or represents that its use would not infringe privately owned rights. Reference herein to any specific commercial product, process, or service by trade name, trademark, manufacturer, or otherwise does not necessarily constitute or imply its endorsement, recommendation, or favoring by the United States Government or any agency thereof. The views and opinions of authors expressed herein do not necessarily state or reflect those of the United States Government or any agency thereof.

DISCLAIMER

Portions of this document may be illegible in electronic image products. Images are produced from the best available original document.

BW10018-TR-4
DOE/CH/10018-14

HEAT RECOVERY AND SEED RECOVERY DEVELOPMENT PROJECT

Preliminary Design Report (PDR)

Prepared by:

A.H. Arkett, Project Manager
K.C. Alexander, Engineer
A.D. Bolek, Engineer
B.K. Blackman, Engineer
P.E. Kurrle, Engineer
S.V. Tram, Engineer
A.M. Warren, Engineer
A.J. Ziobrowski, Engineer
Babcock & Wilcox
a McDermott company
Fossil Power Generation Division
Barberton, Ohio 44203

Submitted by:

Babcock & Wilcox
a McDermott company
Contract Research Division, Barberton
P.O. Box 351
Barberton, Ohio 44203

Date Published:

June 1, 1981

DISCLAIMER

This book was prepared as an account of work sponsored by an agency of the United States Government. Neither the United States Government nor any agency thereof, nor any of their employees, makes any warranty, express or implied, or assumes any legal liability or responsibility for the accuracy, completeness, or usefulness of any information, apparatus, product, or process disclosed, or represents that its use would not infringe privately owned rights. Reference herein to any specific commercial product, process, or service by trade name, trademark, manufacturer, or otherwise, does not necessarily constitute or imply its endorsement, recommendation, or favoring by the United States Government or any agency thereof. The views and opinions of authors expressed herein do not necessarily state or reflect those of the United States Government or any agency thereof.

Prepared for:

The United States Department of Energy
DOE Contract No. DE-AC02-79CH10018
B&W Contract No. CRD-1038

DISTRIBUTION OF THIS DOCUMENT IS UNLIMITED

"NOTICE"

This report was prepared as an account of work sponsored by an agency of the United States Government. Neither the United States Government nor any agency thereof, nor any of their employees, nor their contractors and subcontractors or their employees, makes any warranty, expressed or implied, or assumes any legal liability or responsibility for any third party's use or the results of such use of any information, apparatus, product or process disclosed in this report or represents that its use by such third party would not infringe privately-owned rights.

TABLE OF CONTENTS

	Page
1.0. INTRODUCTION	1
2.0. DESIGN PHILOSOPHY	3
2.1. Test System	3
2.2. Flexibility	4
2.3. Modifications	4
3.0. SYSTEM DESCRIPTION AND HEAT AND MATERIAL BALANCES	6
3.1. System Description	6
3.1.1 HRSR Gas Stream Subsystem	8
3.1.2 Economizer Feedwater Subsystem	15
3.1.3 Boiler Enclosure Wall Cooling Circuit Blowdown Subsystems	17
3.1.4. Superheated Steam Subsystem	19
3.1.5. Intermediate Temperature Air Heater Steam Subsystem	21
3.1.6. Heat Rejection System	23
3.1.7. Regenerative and Tubular Air Heater Air Subsystem	27
3.1.8. Channel and Diffuser Simulator Cooling Circuit Subsystem	27
3.1.9. Ash and Seed Handling Subsystem	28
3.1.10 Chemical Feed Subsystems	32
3.2. Heat and Material Balances	34
3.2.1. 100% Load Conditions	40

TABLE OF CONTENTS (Continued)

3.2.2. 85% Load Conditions - - - - - - - - - - - 42

3.2.3. 70% Load Conditions - - - - - - - - - - - 44

4.0. EQUIPMENT DESCRIPTION AND FUNCTIONAL REQUIREMENTS - - 70

4.1. Furnace - 71

4.1.1. Water Cooled vs. Refractory Furnace - - - 72

4.1.2. Furnace Design Description - - - - - - - 76

4.2. Secondary Superheater - - - - - - - - - - - - - 92

4.3. Intermediate Temperature Air Heater - - - - - - - 96

4.4. Primary Superheater - - - - - - - - - - - - - - 101

4.5. Economizer - - - - - - - - - - - - - - - - - - - 105

4.6. Test Air Heaters - - - - - - - - - - - - - - - 108

4.6.1. Tubular Air Heater - - - - - - - - - - - 109

4.6.2. Regenerative Air Heater - - - - - - - - - 112

4.7. Electrostatic Precipitator - - - - - - - - - - 116

4.8. Ash and Seed Handling Equipment - - - - - - - - - 127

4.8.1. Wet Ash Handling System - - - - - - - - - 127

4.8.2. Dry Ash Handling System - - - - - - - - - 130

4.9. Auxiliary Equipment - - - - - - - - - - - - - - - 131

4.9.1. Attemperators - - - - - - - - - - - - - - 132

4.9.2. Blowdown Tank - - - - - - - - - - - - - - 134

4.9.3. Chemical Feed Injection Equipment - - - - 135

4.9.4. Condenser/Subcooler - - - - - - - - - - - 141

4.9.5. Electric Air Heaters - - - - - - - - - - 145

4.9.6. Fans - Secondary Combustor and Test Air Heaters - - - - - - - - - - - - - - - - 147

TABLE OF CONTENTS (Continued)

4.9.7. Flash Tank - - - - - - - - - - - - - - - 148

4.9.8. Pumps - Boiler Feed Pump - - - - - - - 149

4.9.9. Pumps - Circulating Pumps - - - - - - - 154

4.9.10. Sootblowers - - - - - - - - - - - - - - 155

4.9.11. Steam Drum - - - - - - - - - - - - - - 157

4.9.12. Surge Tank - - - - - - - - - - - - - - 160

5.0. Controls - 163

5.1. Description of the Control Subsystems - - - - 164

5.1.1. Nozzle and Diffuser Cooling Systems - - 165

5.1.2. Steam Drum Level/Feedwater Control - - 165

5.1.3. Steam Drum Pressure and Superheater Steam Temperature Controls - - - - - 166

5.1.4. Secondary Superheater Attemperator Control - - - - - - - - - - - - - - 167

5.1.5. Secondary Superheater Outlet Pressure Control - - - - - - - - - - - - - - 167

5.1.6. Flash Tank Pressure and Intermediate Temperature Air Heater Outlet Temperature Control - - - - - - - - - - - - - - 167

5.1.7. Intermediate Temperature Air Heater Attemperator Control - - - - - - - - 168

5.1.8. Flash Tank Level Control - - - - - - - 168

5.1.9. Condenser Pressure Control - - - - - - 168

5.1.10. Surge Tank Level Control - - - - - - - 169

5.1.11. Subcooler Outlet Temperature Control - 169

5.1.12. Secondary Combustion Air Flow Control - 169

TABLE OF CONTENTS (Continued)

5.1.13. Secondary Combustion Air Temperature Control - - - - - - - - - - - - - - - - - 170

5.1.14. Induced Draft Fan Control - - - - - - - - 170

5.1.15. Tubular and Regenerative Air Heater Controls - - - - - - - - - - - - - - - - 170

5.1.16. Furnace Purge Control - - - - - - - - - - 172

5.2. Measurement Readouts - - - - - - - - - - - - - - - 172

5.3. Annunciation and Trip Factors - - - - - - - - - - 173

5.4. Diagnostic Instrumentation - - - - - - - - - - - - 173

6.0. Interfacing Systems - - - - - - - - - - - - - - - - - - 197

6.1. CFFF Modifications - - - - - - - - - - - - - - - - 197

6.2. Utilities - 198

6.2.1. Electric Power Requirements - - - - - - - 198

6.2.2. Cooling Water for Channel and Diffuser Simulator - - - - - - - - - - - - - - - 198

6.2.3. Make-Up Water for the HRSR Steam Circuit - - - - - - - - - - - - - - - - - 199

6.2.4. Ash/Seed Removal - - - - - - - - - - - - - 199

6.2.4.1. Removal of Wet Ash/Seed - - - - - - 200

6.2.4.2. Removal of Dry Ash/Seed - - - - - - 200

6.2.5. Control Air Supply - - - - - - - - - - - 201

6.2.6. Service Air Supply - - - - - - - - - - - 201

6.2.7. Nitrogen Supply - - - - - - - - - - - - - 201

6.2.8. Miscellaneous Cooling Water - - - - - - - 201

TABLE OF CONTENTS (Continued)

6.3. Hardware Interfaces - - - - - - - - - - - - - - - - 202

6.4. Scope List and Terminal Points - - - - - - - - - - 202

7.0. Operation and Maintenance - - - - - - - - - - - - - - 207

7.1. Operator's Responsibility - - - - - - - - - - - - 207

7.2. Personnel Safety - - - - - - - - - - - - - - - - 207

7.3. Preparation for Start-Up - - - - - - - - - - - - 213

7.3.1. Inspection and Equipment Check Out - - 214

7.3.1.1. HRSR Furnace - - - - - - - - - - - 214

7.3.1.2. Steam Drum - - - - - - - - - - - - 215

7.3.1.3. Gage Glasses - - - - - - - - - - - 216

7.3.1.4. Safety Valves - - - - - - - - - - 216

7.3.1.5. Pressure Gage - - - - - - - - - - 217

7.3.1.6. Drains, Vents and Blow-Off Valves - - - - - - - - - - - - 218

7.3.1.7. Feedwater Pumps - - - - - - - - - 218

7.3.1.8. Fans - - - - - - - - - - - - - - - 219

7.3.1.9. Dampers - - - - - - - - - - - - - 219

7.3.1.10. Flues and Ducts - - - - - - - - - 220

7.3.1.11. Stop Valves and Check Valves - - 220

7.3.1.12. Boiler Expansion - - - - - - - - - 221

7.3.1.13. Economizer - - - - - - - - - - - - 221

7.3.1.14. Sootblowers - - - - - - - - - - - - 222

7.3.1.15. Superheaters - - - - - - - - - - - 224

7.3.1.16. Intermediate Temperature Air Heaters - - - - - - - - - - 224

TABLE OF CONTENTS (Continued)

7.3.1.17. Tubular Air Heater - - - - - - - 225

7.3.1.18. Regenerative Air Heater - - - 226

7.3.1.19. Electrostatic Precipitator - - 226

7.3.2. Pre-Start Cleaning - - - - - - - - - 233

7.3.2.1. Flushing of the Condensate-Feedwater System - - - - 233

7.3.2.2. Boiling Out of Boiler Circuits - - - - - - - - - - - - 234

7.3.2.3. Steam Line Blowing - - - - - - - 239

7.3.2.4. Flushing of Simulator's Cooling Circuits - - - - - - - 241

7.4. Start-Up and Shutdown - - - - - - - - - - - - - - 241

7.4.1. Precaution and Equipment Protection 246

7.4.1.1. Steam Drum - - - - - - - - - - - 246

7.4.1.2. Prevention of Explosion in the Boiler - - - - - - - - 248

7.4.1.3. Gas Temperature Controls - - - 250

7.4.1.4. Economizer - - - - - - - - - - - 251

7.4.1.5. Tubular Air Heater - - - - - - - 252

7.4.2. Regenerative Air Heater - - - - - - - 253

7.4.3. Electrostatic Precipitator - - - - 254

7.5. Normal HRSR System Operation - - - - - - - - 259

7.6. Maintenance - - - - - - - - - - - - - - - - - - - 259

7.6.1. In-Service Maintenance - - - - - - - 260

7.6.2. Outage Maintenance- - - - - - - - - 265

TABLE OF CONTENTS (Continued)

7.6.2.1. Boiler and Its Pressure Parts - - - - - - - - - - 265

7.6.2.2. Tubular Air Heater - - - - - - 268

7.6.2.3. Regenerative Air Heater - - - 269

7.6.2.4. Electrostatic Precipitator - - 270

7.6.3. Boiler Water Treatment - - - - - - - - - 275

7.6.3.1. Prevention of Internal Corrosion - - - - - - - - 276

7.6.3.2. Prevention of Internal Deposits - - - - - - - - - 280

7.6.3.3. Prevention of Carryover - - - 281

APPENDIX A Recommended Environmental Requirements for Compliance with Federal and State of Tennessee Regulations

APPENDIX B Channel and Diffuser Simulator

APPENDIX C Equipment Arrangement Drawings

APPENDIX D CDS Barrel Drawings

LIST OF TABLES

		Page
3-1	Heat and Material Balance Summary for 100% Load Conditions	41
3-2	Heat and Material Balance Summary for 85% Load Conditions	43
3-3	Heat and Material Balance Summary for 70% Load Conditions	45
3-4	Heat and Material Balance - 100% Load Conditions of Individual Process Streams	47
3-5	Heat and Material Balance - 85% Load Conditions of Individual Process Streams	55
3-6	Heat and Material Balance - 70% Load Conditions of Individual Process Streams	62
3-7	B & W Calculated Part Load Conditions Vs. DOE Part Load Combustor Analyses	69
4-1	Listing of Precipitator Conditions for Comparison	118
4-2	Correction Factors Applied to the Operating Precipitator Migration Velocity	119
4-3	Minimum Requirements of Electrical Equipment for the Precipitator	123
4-4	Specifications for the Transformer-Rectifier Controls	126
4-5	Attemperator Design Requirements--Secondary Superheater	133
4-6	Attemperator Design Requirements--Intermediate Temperature Air Heater	134
4-7	Blowdown Tank Design Requirements	136
4-8	Design Requirements for the Chemical Feed System Equipment	138
4-9	HRSR Design Conditions for the Chemical Feed System	141
4-10	Design Conditions for Condenser/Subcooler Equipment	143
4-11	Design Requirements for the Electric Air Heaters	146
4-12	Design Requirements for the Forced Draft Fans	148

LIST OF TABLES (continued)

4-13 Design Requirements for the Boiler Feed Pump - - - - - - - - 151

4-14 Design Requirements for the Circulating Pump - - - - - - - - 154

4-15 Design Requirements for the Sootblower System - - - - - - - - 155

5-1 Measurement Readouts - 175

5-2 Annunciation and Trip Factors - - - - - - - - - - - - - - - - - 180

7-1 Recommended Water Limits - - - - - - - - - - - - - - - - - - - 276

LIST OF FIGURES

		Page
3-1	20 MWt MHD Plant Process Flow Diagram	7
3-2	HRSR Gas Stream Subsystem	9
3-3	Secondary Combustion Air Subsystem	10
3-4	Regenerative and Tubular Air Heater Combustion Gas Subsystem	13
3-5	Economizer Feedwater Subsystem	16
3-6	Boiler Enclosure Wall Cooling Circuit and Blowdown Subsystems	18
3-7	Superheated Steam Subsystem	20
3-8	Intermediate Temperature Air Heater Steam Subsystem	22
3-9	Heat Rejection Subsystem	24
3-10	Regenerative and Tubular Air Heater Air Subsystem	26
3-11	Channel and Diffuser Simulator Cooling Circuit Subsystem	27
3-12a	Ash and Seed Handling Subsystem	29
3-12b	Slag and Seed Sampling Subsystem	30
3-12c	Ash and Seed Sampling Subsystem	32
3-13	Chemical Feed Subsystems	33
3-14	20 MWt MHD Plant Process Flow Diagram	37
3-15	20 MWt MHD Plant Steam and Water Flow Control Diagram	38
3-16	20 MWt MHD Plant Air and Gas Flow Control Diagram	39
4-1	Studded and Refractory Covered Membrane Wall	77
4-2	Multiple-Lead Ribbed Tube	79
4-3	Furnace - Sectional Side View	82
4-4	Secondary Combustion System--Schematic	84
4-5	Air Injection Port Assembly--Side View	86

LIST OF FIGURES (Continued)

4-6	Air Injection Port Assembly--Back View	87
4-7	Air Injection Port	88
4-8	Injection Velocity vs. Port Diameter	89
4-9	Secondary Superheater--Sectional Side View	94
4-10	Intermediate Temperature Air Heater--Sectional Side View	98
4-11	Primary Superheater--Sectional Side View	103
4-12	Primary Superheater--View of Steam Surface	104
4-13	Economizer	106
4-14	Tubular Air Heater--Sectional Side View	111
4-15	Regenerative Air Heater	113
4-16	Type KH8 Regenerative Surface	114
4-17	Type KH10 Regenerative Surface	115
4-18	Electrostatic Precipitator	120
4-19	Precipitator Gas Lane Detail	121
4-20	Submerged Drag Chain Ash Handler	129
4-21	Heat Rejection Equipment Arrangement	142
4-22	Flash Tank	150
4-23	Steam Drum	159
4-24	Surge Tank	161
5-1	Instrument and Control Symbols	183
5-2	MHD Channel Simulator Cooling System	184
5-3	Steam Drum Level Control	185
5-4	Steam Drum Pressure and Superheater Outlet Temperature Control	186
5-5	Secondary Superheater Attemperator Control and Outlet Pressure Control	187
5-6	Flash Tank Pressure and Intermediate Temperature Air Heater Outlet Temperature Control	188

LIST OF FIGURES (Continued)

5-7	Intermediate Temperature Air Heater Attemperator Control	189
5-8	Flash Tank Level Control	190
5-9	Heat Rejection System Control	191
5-10	Surge Tank Level Control	192
5-11	Secondary Combustion Air Flow and Temperature Control	193
5-12	Induced Draft Fan Control	194
5-13	Tubular Air Heater Control	195
5-14	Regenerative Air Heater Control	196
7-1	Permissible Rate of Saturation Temperature Change	247
7-2	Arrangement of Permanent Thermocouples on Steam Drum	248
7-3	Low Temperature Corrosion Limits	253
7-4	Boiler Water Limits	278
7-5	Recommended Maximum Silica Concentration in Boiler Water	282

1.0. Introduction

This document is the Preliminary Design Report (PDR), a deliverable under the contract between The Babcock and Wilcox Company (B&W) and the United States Department of Energy (DOE), Contract DE-AC02-79CH10018. The purpose of the report is to present the design information and expected performance characteristics of the (20 MWt) Heat Recovery and Seed Recovery (HRSR) system to be fabricated, installed, and evaluated by B&W as a part of the contract. Ultimately, the data obtained from the operation of the HRSR test unit will provide a technological basis for the design of commercial size HRSR systems for coal fired open cycle MHD power plants.

During the past year, B&W together with Burns and Roe, Inc. and Mississippi State University, established the guidelines for the design of HRSR system test apparatus. The Scale-Up to Large Size System Report, previously prepared by the B&W Team, clearly identified those areas of a commercial HRSR system which require the greatest amount of technical investigation. Those areas are:

Corrosion

Slag-Seed Chemistry

Gas Chemistry

Secondary Combustion

Heat Transfer

Particulate Removal

Responding to these data needs, B&W together with other DOE contractors involved in MHD prepared and published a Work Plan for the HRSR program. The Work Plan is designed to coordinate the activities of the program participants into a united effort to resolve these technical

issues. It ensures that the data required to address the technical concerns are obtained in the most cost effective and expedient method possible. In addition to the Work Plan, a Preliminary Test Plan was also prepared. This plan described the types of data that B&W felt were necessary to attain the program objectives and addressed how the data will be obtained.

Indeed, this Preliminary Design Report is the culmination of everything that has preceded it. The reports and plans which have been completed by the B&W Team represent the foundation upon which the HRSR system design is based. In addition, the design not only reflects the B&W Team ideas, but also attempts to incorporate the concepts, comments, and concerns of the entire MHD community.

This design does not have "all the answers" and no such claim is made. It is imperative that the design be viewed as a piece of test apparatus, no more but certainly no less. Whether or not this design works perfectly the first time is not at issue here. The question is will the experiments to be conducted with this test equipment teach us how to design commercial size HRSR systems in a safe and economical manner. We maintain that it will.

It should be noted that the term "Preliminary" in the title is descriptive of the report and not the design of the HRSR system itself. Without question, this report is preliminary, namely, more information in greater detail will be provided in the Final Design Report to be submitted in the future. The design itself, however, should not be regarded as preliminary. The design which we are presenting should be considered as final and should be evaluated in that light. It is anticipated that the design presented herein will be used as our basis for material procurement which is to begin in the near future.

2.0. Design Philosophy

This section explains the philosophy that influenced the design of the HRSR system presented in this report. The philosophy was developed by determining the project objectives and how best to meet these objectives and by identifying problem areas.

The design philosophy has three parts:

1. The HRSR system is a test system and should be designed to obtain accurate, reliable data.
2. The HRSR gas behavior is not precisely known so the system should have sufficient flexibility to permit the system to operate satisfactorily over a range of conditions.
3. The HRSR system must be capable of accepting modifications if conditions warrant.

Each of these subjects will be discussed below.

2.1. Test System

The HRSR system design contains special features to facilitate testing. Special test ports for intrusive and nonintrusive test apparatus have been included in addition to an abundance of access doors for visual examinations (between test) of the internal surfaces. Access around the system has been maximized to provide space for special instrumentation and test personnel. Special probes will be inserted at selected locations to determine the corrosion resistance of various materials. Ash/slag collection equipment has been modified to determine quantities of rejected materials for material balance purposes. Collection of seed and ash at separate hoppers permits the measurement of ash and seed in different areas. Sootblowers have been specially adapted for this size system to maintain sootblowing effects at the level proportionally experienced in full sized systems.

2.2. Flexibility

Special consideration for flexibility has been included in the design. Since the behavior of a seed laden gas is not fully understood, flexibility of design permits the HRSR system to function satisfactorily if conditions are not exactly as estimated.

Tube metal temperatures in the superheater and the intermediate temperature air heater (ITAH) can be adjusted if the gas temperature is different from design conditions. The steam flow in the tubes can be varied to set the tube metal temperatures (steam is used in the ITAH for convenience). The secondary combustion site of the furnace is also flexible since the angle and position of entrance of the secondary combustion air can be varied. Multiple hoppers are provided to determine how and where seed and ash condense even if the gas temperature profile changes with load or for some other reason. Though not a true HRSR component, the channel and diffuser simulator is flexible to permit adjustment of furnace inlet conditions.

2.3. Modifications

It is anticipated that modifications will not be needed since the system has been designed with some degree of conservatism. However, should it be desirable to change the operational reliability or extend the range of data, some modifications are possible.

Space is provided for additional surface in selected areas. Tubes of the superheaters, ITAH, and air heaters can be replaced or changed. Tube materials can be changed along with new tube thicknesses, tube spacing and tube length to change reliability or extend the data range. Also, the simulator can be adjusted to provide somewhat different conditions to the HRSR system if this is desirable.

In conclusion, the design philosophy presented in this section has been derived from our analysis of the HRSR project. The HRSR design presented in this report is an adaptation of that analysis by applying the design philosophy.

3.0. System Description and Heat and Material Balances

The following sections contain the system description (Section 3.1.) and the heat and material balances (Section 3.2.). Included in Section 3.1. are descriptions of 1) the HRSR gas stream subsystem, 2) the economizer feedwater subsystem, 3) the enclosure wall cooling circuits and blowdown subsystems, 4) the superheated steam subsystem, 5) the intermediate temperature air heater steam subsystem, 6) the heat rejection subsystem, 7) the regenerative and tubular air heater air subsystem, 8) the channel and diffuser simulator cooling circuit subsystem, 9) the ash and seed handling subsystem, and 10) the chemical feed subsystems. Process flow diagrams are included with the description of each subsystem. The heat and material balances are given in tabular form in Section 3.2. for 70%, 85%, and full load conditions. The expected turndown capacity of the combustor is 70% of full load.

3.1. System Description

The 20 MWt MHD plant process flow diagram is shown in Figure 3-1. Hot combustion gas flows through the channel/diffuser simulator, the boiler (which includes the furnace, the secondary superheater, the intermediate temperature air heater, and the primary superheater), the economizer, the tubular and regenerative air heaters, and the electrostatic precipitator. Subcooled water is pumped by the feedwater pump through the economizer to the steam drum. The water in the steam drum is pumped through the boiler enclosure walls, where it becomes a water-steam mixture, and back to the steam drum. Steam rises from the steam drum and splits into two streams. One stream flows to the flash tank where the steam vents to the intermediate temperature air heater and

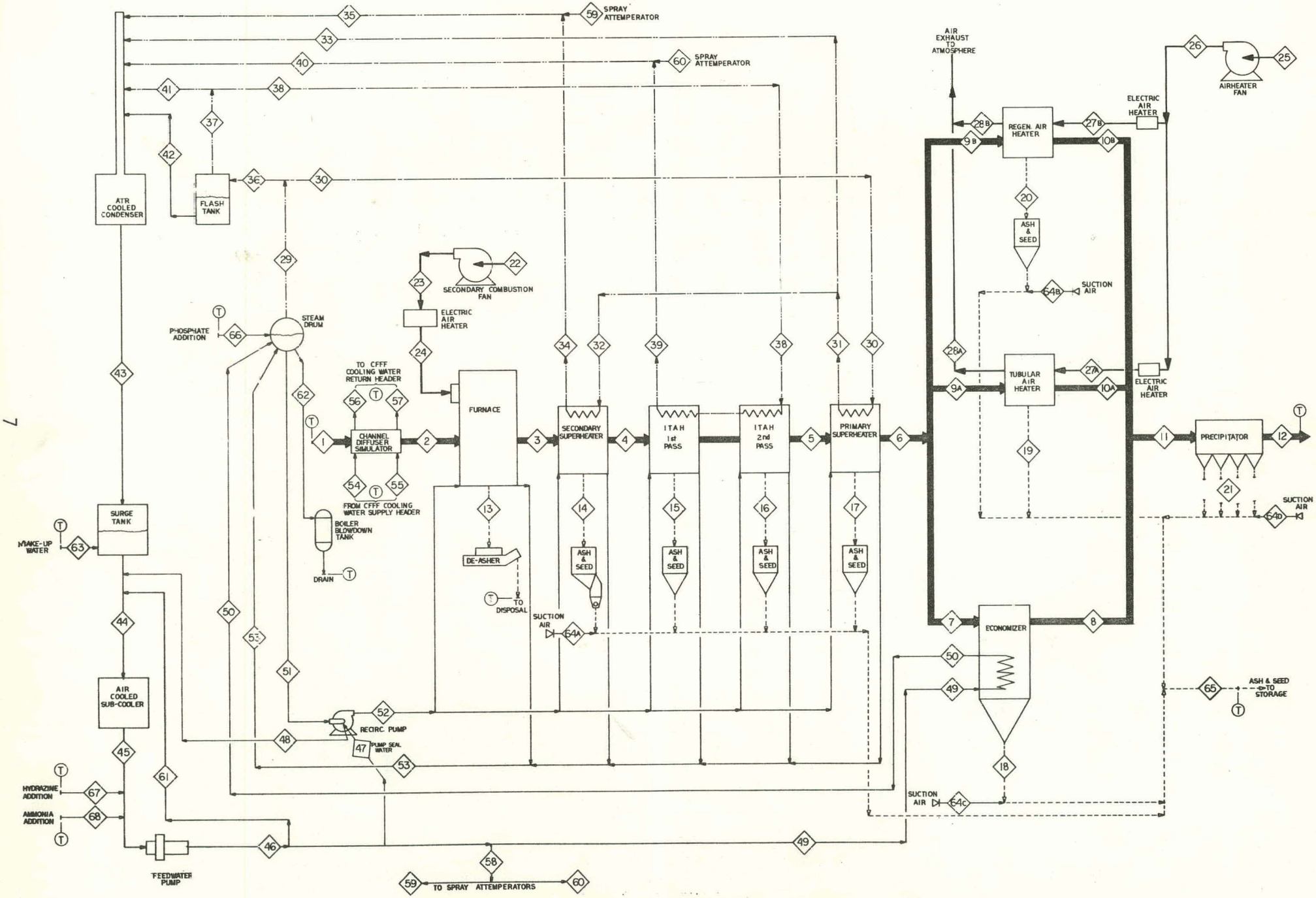

Figure 3-1 20 MWt MHD Plant Process Flow Diagram

the water discharges to the collecting header of the air cooled condenser. The other stream is heated in the primary and secondary superheaters and is then condensed in the air cooled condenser. The condensate then flows to the surge tank and the air cooled subcooler. The various subsystems are described in greater detail in the following sections. Expected conditions for full load without sootblowing are given.

3.1.1 HRSR Gas Stream Subsystem

The process flow diagram for the HRSR gas stream subsystem is shown in Figure 3-2. 33,500 lb/hr of combustion gas (Stream 1) flows from the MHD combustor (which is being designed and supplied by another contractor) and into the MHD channel and diffuser simulator at 4250F, 6.0 atm, and 530 fps. The coal is burned at 85% stoichiometry in the combustor to maximize the conductivity of the seed in the channel, and to minimize the formation of NO_x. It is assumed that 70% of the slag drops out in the combustor, and that the remaining 30% is carried into the simulator with the combustion gas. The composition of this stream and the other streams is shown in the heat and material balances given in Section 3.2. The channel/diffuser simulator reduces the pressure and temperature of the combustion gas to 1 atm and 3800F, respectively; the flue gas exits the channel and diffuser simulator at about 300 fps and gives up 6.94 x 10^6 Btu/hr to the channel and diffuser simulator cooling circuits. More information concerning the channel and diffuser simulator may be

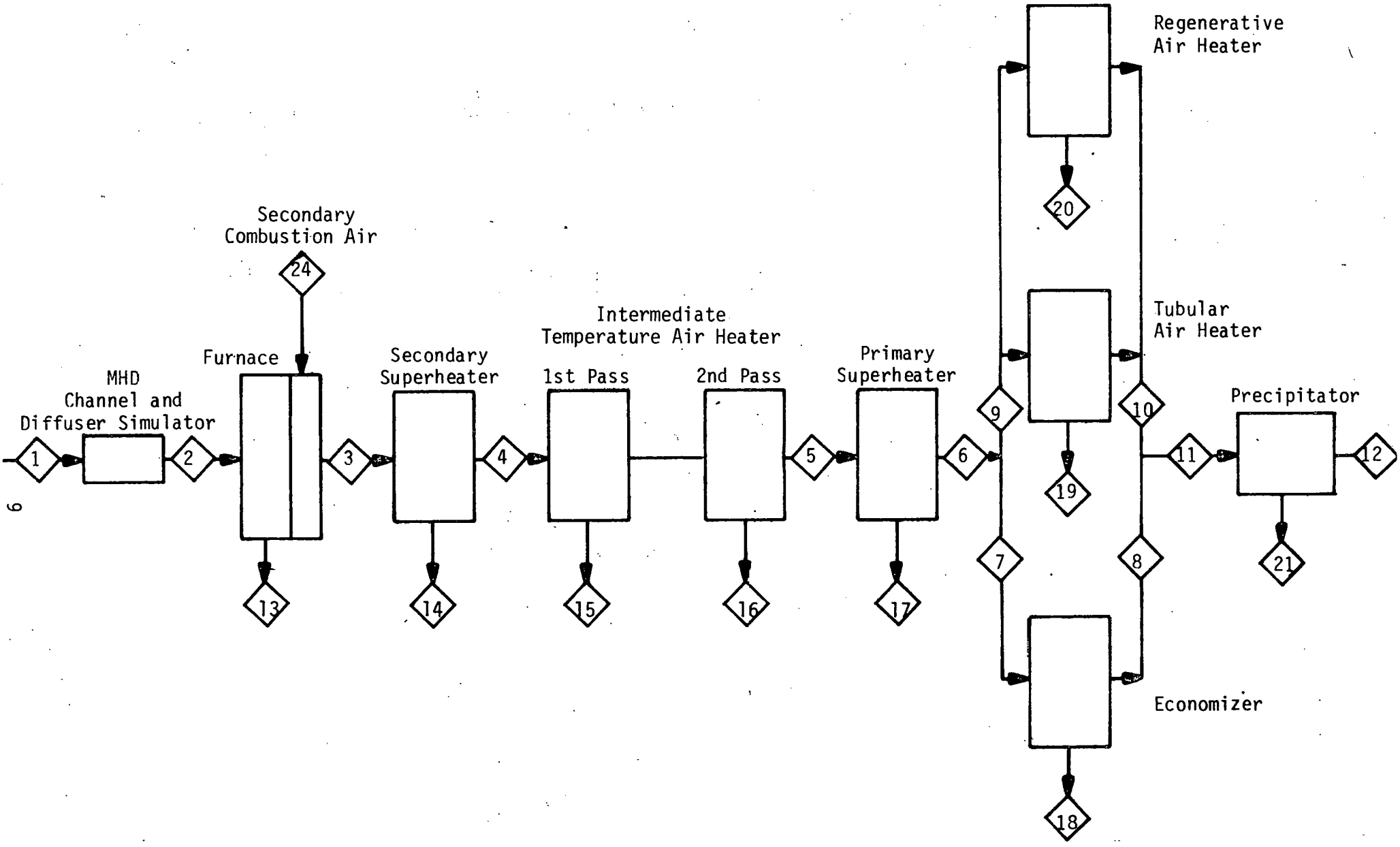

Figure 3-2 HRSR Gas Stream Subsystem

found in Appendix B.

The combustion gas (Stream 2) enters the bottom of the furnace from the channel and diffuser simulator under a slight vacuum. It flows upward through the furnace at about 26 fps. It is assumed that all the slag and seed leaving the combustor is carried with the combustion gas into the furnace. The furnace is divided into two sections: before and after secondary combustion. Before secondary combustion occurs, the combustion gas is cooled to 2800F, transferring 13.95 x 10^6 Btu/hr to the membrane enclosure walls. Secondary combustion occurs near the top of the furnace. A process flow diagram of the secondary combustion air subsystem is shown below in Figure 3-3. 6800 lb/hr of ambient air

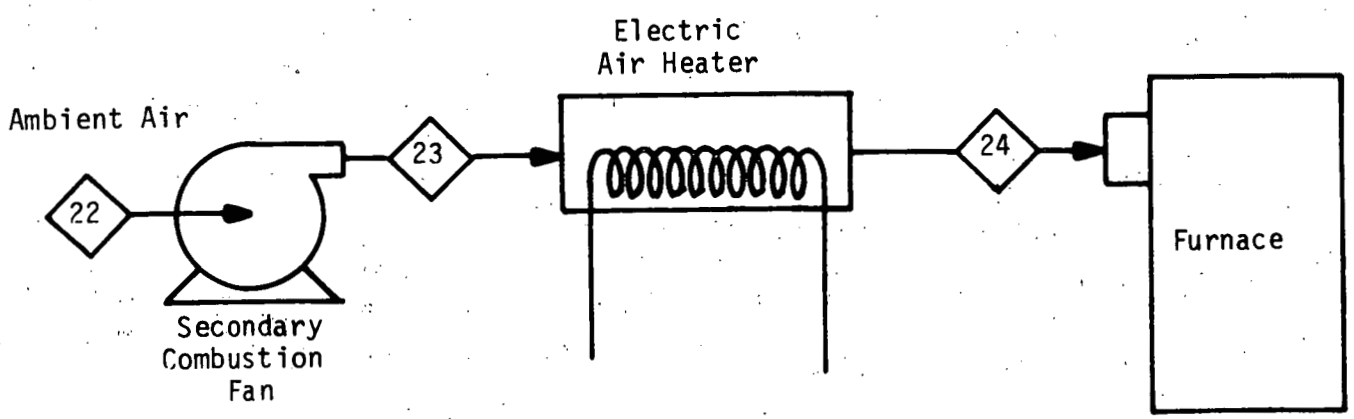

Figure 3-3 Secondary Combustion Air Subsystem

(Stream 22) enters the secondary combustion fan at 59F and 1 atm. The fan pushes the air into an electric heater where it is preheated to 150F. From there it enters the furnace through small portholes to combust with the existing flue gas at 105% stoichiometry. The combustion

gas reaches an adiabatic flame temperature of 2980F (according to the NASA Free Energy Minimization Program), transfers 5.91 x 10^6 Btu/hr to the enclosure walls, and exits at 2600F and -0.5 in. wg. 60 lb/hr of slag and 10 lb/hr of seed drop out in the furnace (Stream 13). Although the temperature of the combustion gas in the furnace is above the condensation temperature of the seed, some seed is likely to condense near and on the cooler surface of the membrane walls.

From the furnace, the combustion gas (Stream 3) flows into the secondary superheater (SSH) at 21 fps. 12.08 x 10^6 Btu/hr is absorbed by the enclosure walls, and 2.05 x 10^6 Btu/hr is absorbed by the pendant SSH tubes. The seed begins to condense around 2400F and to solidify around 1950F according to the NASA FEM Program. These temperatures are achieved in the SSH as the combustion gas exits at 1650F. For this reason, most of the seed is expected to condense, solidify, and drop out at this point. It is estimated that 78% or 699 lb/hr of the seed and 12 lb/hr of the ash will drop out in Stream 14.

From the secondary superheater, the combustion gas enters the intermediate temperature air heater (ITAH). The combustion gas flows upward in the first pass and downward in the second at a velocity of about 18 fps. The gas transfers 4.88 x 10^6 Btu/hr to the enclosure walls and 2.96 x 10^6 Btu/hr to the ITAH tubes and exits at 1009F. 56 lb/hr of seed and 5 lb/hr of ash drop out in the first pass of the ITAH in Stream 15, and 35 lb/hr of seed and 2 lb/hr of ash drop out in the second pass in Stream 16.

The combustion gas (Stream 5) flows from the second pass of the

ITAH into the bottom of the primary superheater (PSH). It flows upward through the PSH at 15 fps, transfers 1.39 x 10^6 Btu/hr to the PSH tubes and 0.75 x 10^6 Btu/hr to the enclosure walls, and exits the boiler at 823F and -1.3 in. wg. 37 lb/hr of seed and 2 lb/hr of ash drop out in Stream 17.

From the primary superheater the combustion gas (Stream 6) splits into two streams, Streams 7 and 9. Stream 7 flows through ductwork to the economizer, dropping in pressure to -3.3 in. wg. The economizer is divided into four sections: two passes of tube banks and two of cavities. The flue gas flows downward over tube banks in the first pass, upward in a cavity in the second, downward over tube banks in the third, and upward in a cavity in the fourth. It transfers 5.34 x 10^6 Btu/hr to preheat the boiler feedwater and exits the economizer at 329F and -9.3 in. wg. (Stream 8). 2 lb/hr of seed and 1 lb/hr of ash drop out in Stream 18.

A side stream (Stream 9) is taken off Stream 6 to test the regenerative and/or tubular air heaters. The air heaters may be tested individually, simultaneously, or not at all. A process flow diagram of the gas side is given as follows in Figure 3-4.

6225 lb/hr of combustion gas flows to the tubular air heater in Stream 9a, and 6000 lb/hr flows to the regenerative air heater in Stream 9b. The combustion gas gives up 0.82 x 10^6 Btu/hr in the tubular air heater and exits at 330F; it gives up 0.77 x 10^6 Btu/hr in the regenerative air heater and exits at 331F. The combustion gas (Streams 10a and 10b) joins the economizer exit stream (Stream 8) before entering

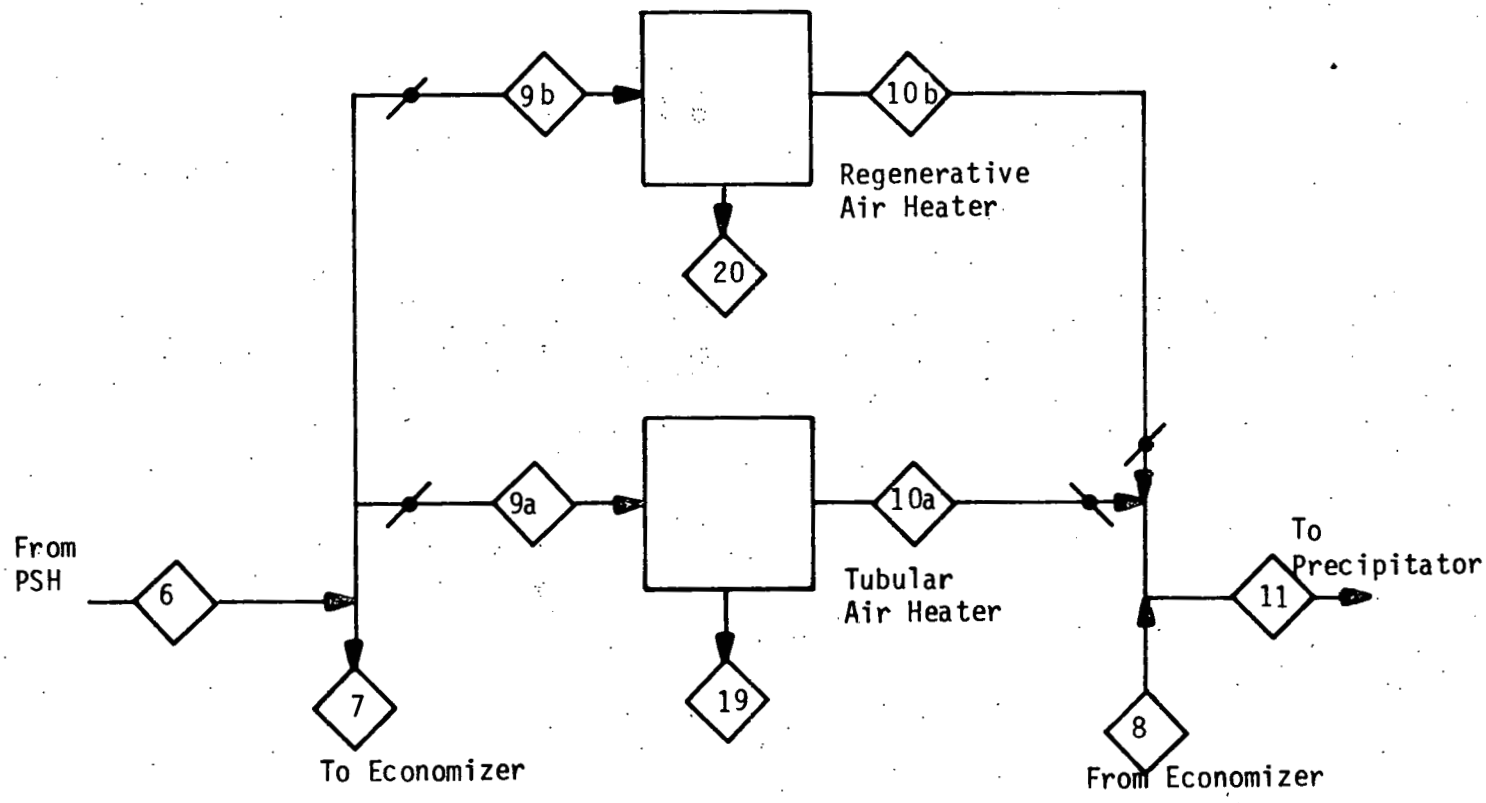

Figure 3-4 Regenerative and Tubular Air Heater Combustion Gas Subsystem

the precipitator in Stream 11. Dampers are provided in the inlet and oulet ductwork of the air heaters to control the flow. Ash and seed dropout in the air heaters (Streams 19 and 20) is negligible, although the system will handle any solids which do drop out.

The combustion gas (Stream 11) next enters the electrostatic precipitator at -11.5 in. wg., losing 2.2 in. wg. in the ductwork from the economizer. The precipitator which is designed to be 99% efficient removes most of the remaining ash and seed particles. It produces an electric charge on the particles to be collected and then propels the charged particles to the collecting plates with electrostatic forces. The collected dust is discharged by rapping into storage hoppers. It is estimated that 58 lb/hr of seed and 35 lb/hr of ash (Stream 21) are removed; 1 lb/hr of ash leaves the precipitator with the combustion gas (Stream 12). The temperature drops about 9F through the precipitator. The pressure drops 1.0 in. wg. through the precipitator and 1.3 in. wg. through the ductwork to the I.D. fan. 39,300 lb/hr of combustion gas leaves the precipitator and flows to the I.D. fan and stack which are being supplied by UTSI.

The boiler, the regenerative and tubular air heaters, and the economizer are top-supported pieces of equipment, and, therefore, expansion occurs downwards and outwards. Expansion is caused by the boiler enclosure walls being heated, and since the internals are supported by the enclosure, the entire boiler expands as well. The boiler is top-supported because it is easier to account for expansion in terms of direction and evenness, and it is easier to support in this manner when beam strength vs. tube tension is taken in consideration.

The vertical 0"-0" setting for the boiler is the vertical centerline of the steam drum. The horizontal 0"-0" setting is 4'-9" above the horizontal centerline of the steam drum (Drawing 39772F-2, Appendix C). During full load operation, expansion is expected to be as much as 2-13/16" downward as shown by the vector at the bottom of the ITAH first pass. Expansion outward is 1" as shown by the vector in line with the furnace entrance plus the 1/4" expansion of the channel and diffuser simulator.

The regenerative and tubular air heaters and the economizer have vertical 0"-0" settings at the vertical centerline of each piece of equipment, and expansion joints are provided in the inlet and outlet ductwork to permit expansion (Drawings 39772F-2 and 39772F-3, Appendix C). The precipitator is supported from the bottom by steel columns and as much as 1/2" of upward expansion is expected.

For the hoppers provided under the furnace, the secondary superheater, the intermediate temperature air heater (first and second pass), and the primary superheater, water seal troughs are provided to permit expansion of the boiler without placing stress on the hoppers. Each of these hoppers are supported from below on structural steel columns. The independently fixed hoppers cost about the same as attached hoopers, are easier to take apart, and eliminate about 25,000 lb of additional weight to the boiler. The hoppers provided under the regenerative and tubular air heaters, the economizer, and the precipitator are each supported directly from the equipment.

3.1.2. Economizer Feedwater Subsystem

The process flow diagram for the economizer feedwater subsystem is shown in Figure 3-5. Subcooled water (Stream 45) exits the subcooler at 250F and 95 psig. It enters the suction side of the feedwater pump

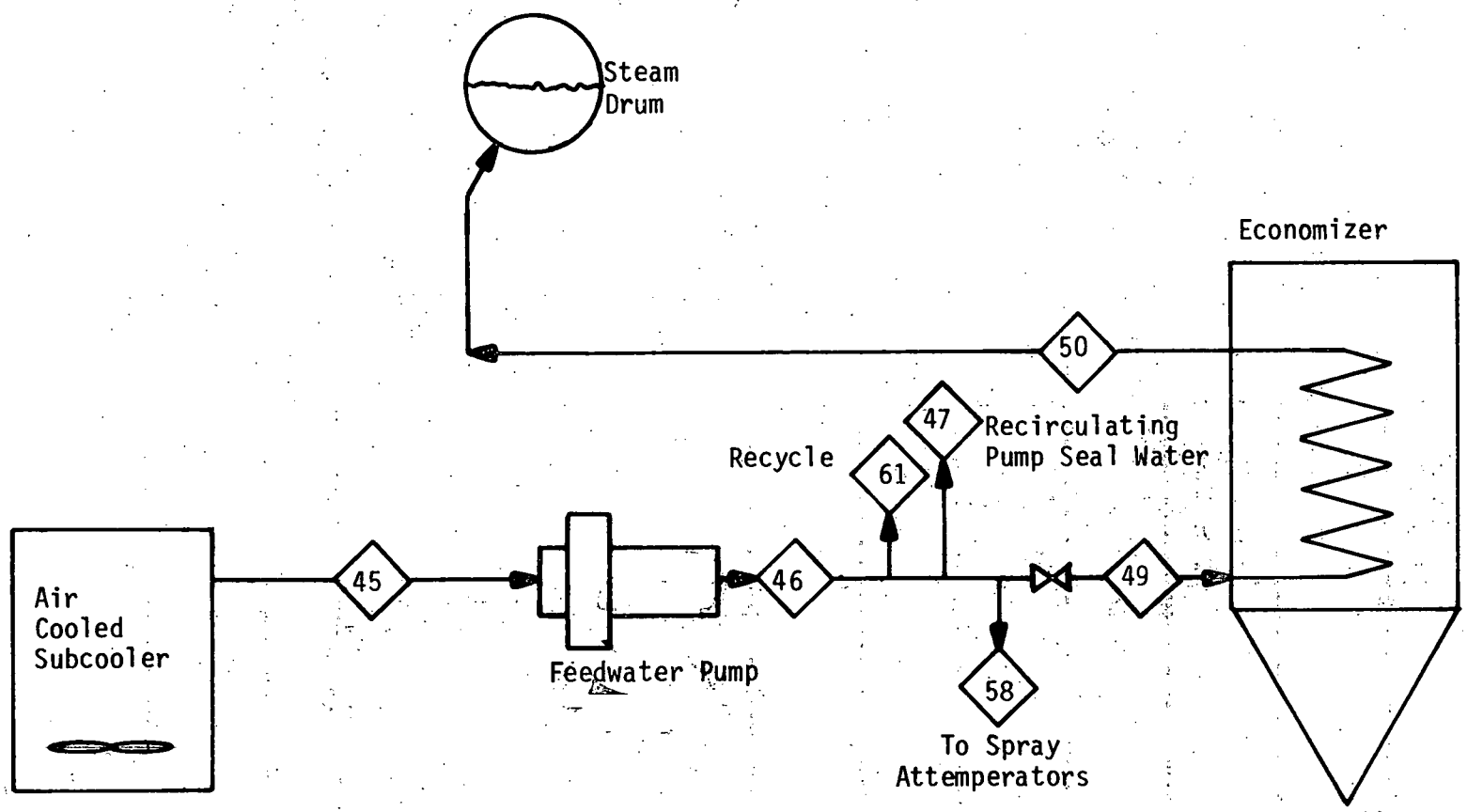

Figure 3-5 Economizer Feedwater Subsystem

and discharges at 2890 psig (Stream 46). Streams 47, 58, and 61 branch off Stream 46, but are described in more detail in Section 3.1.6, Heat Rejection Subsystem. Stream 46 is throttled to 2812 psig since it controls the water level in the steam drum. It is then pumped to the economizer as Stream 49.

Stream 49 enters the economizer at 49,850 lb/hr, 250F and 2812 psig. The economizer heats the feedwater to 356F in two passes. The feedwater flows upward, countercurrent to the combustion gas, in the first pass then flows downward in a pipe external to the economizer so that it can flow upward in the second pass, again countercurrent to the combustion gas. The feedwater leaves the economizer and enters the steam drum at 2800 psig, the pressure at which the steam drum is controlled. The feedwater replaces the steam leaving the drum, but does not replace all of it. The remainder of the steam is replaced with 1900 lb/hr of seal water leakage into the circulation system.

3.1.3. Boiler Enclosure Wall Cooling Circuit and Blowdown Subsystems

The process flow diagram for the boiler enclosure wall cooling circuit and blowdown subsystems are shown in Figure 3-6. 1,230,000 lb/hr of 2800 psig saturated water (Stream 51) flows out of the steam drum through downcomers to the two recirculating pumps. The pumps assure circulation through the ring header, the supplies, the boiler enclosure walls, the risers, and back to the steam drum. The hot combustion gas transfers 37.78×10^6 Btu/hr to the enclosure walls which raises the quality of the saturated mixture (Stream 52) to approximately 4% steam by weight (Stream 53). Steam (Stream 29) is separated from the water with ten B&W cyclone separators. 14,300 lb/hr of seal water (Stream 47) is required for the recirculating

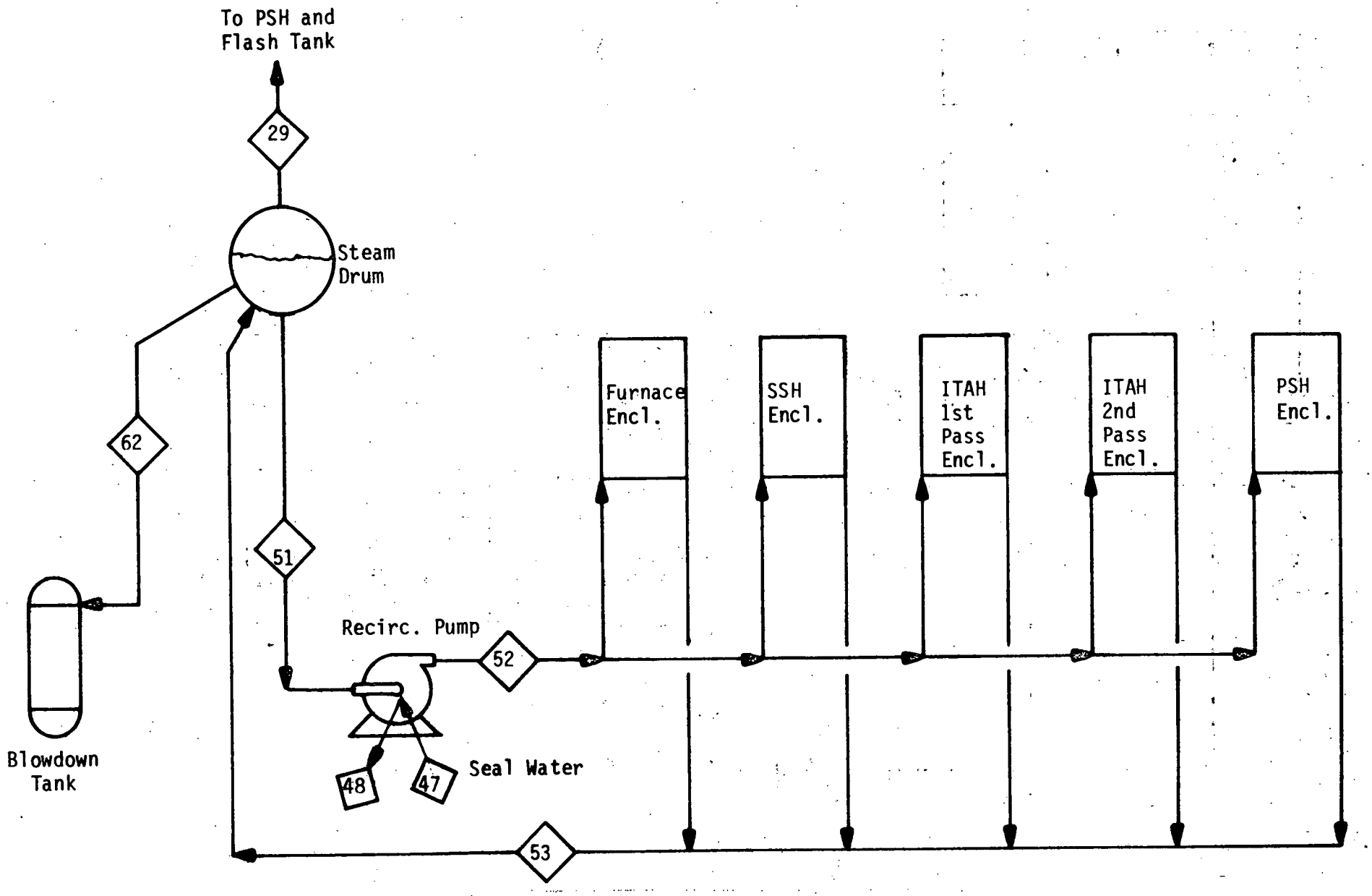

Figure 3-6 Boiler Enclosure Wall Cooling Circuit and Blowdown Subsystems

pumps; however, it is expected that 1900 lb/hr will leak into the circulation system and 12,400 lb/hr (Stream 48) will flow to the surge tank.

The blowdown line (Stream 62) and tank are sized to handle 600 lb/min for a five-minute period, once every eight hours. Blowdown is performed to prevent the buildup of dissolved solids in the steam drum.

3.1.4. Superheated Steam Subsystem

The process flow diagram for the superheated steam subsystem is shown in Figure 3-7. 51,750 lb/hr of steam (Stream 29) flows through the cyclone separators and out of the steam drum at 2795 psig and 685F and splits into two streams. 43,840 lb/hr flows to the flash tank (Stream 36), and 7910 lb/hr flows to the primary superheater (PSH) in Stream 30. The PSH heats the steam to 750F (Stream 31). The pressure drops to 2755 psig. Stream 31 also splits into two streams. 370 lb/hr flows to the collecting header of the air cooled condenser as Stream 33, and 7540 lb/hr flows to the secondary superheater (SSH) as Stream 32. Before entering the condenser collecting header, Stream 33 is throttled to 110 psig and 403F as it controls the temperature of the steam leaving the PSH. Before entering the SSH, Stream 32 flows through a valve which reduces the pressure and temperature to 1335 psig and 618F, respectively, as it controls the SSH steam exit temperature at 1000F.

The secondary superheater heats the steam to 1000F (Stream 34). The pressure drops to 1310 psig. Before entering the condenser, the superheated steam is sprayed with 1050 lb/hr of attemperator water (Stream 59) which reduces the temperature of the superheated steam and, therefore, the cost of the pipe. The attemperator spray reduces and controls the

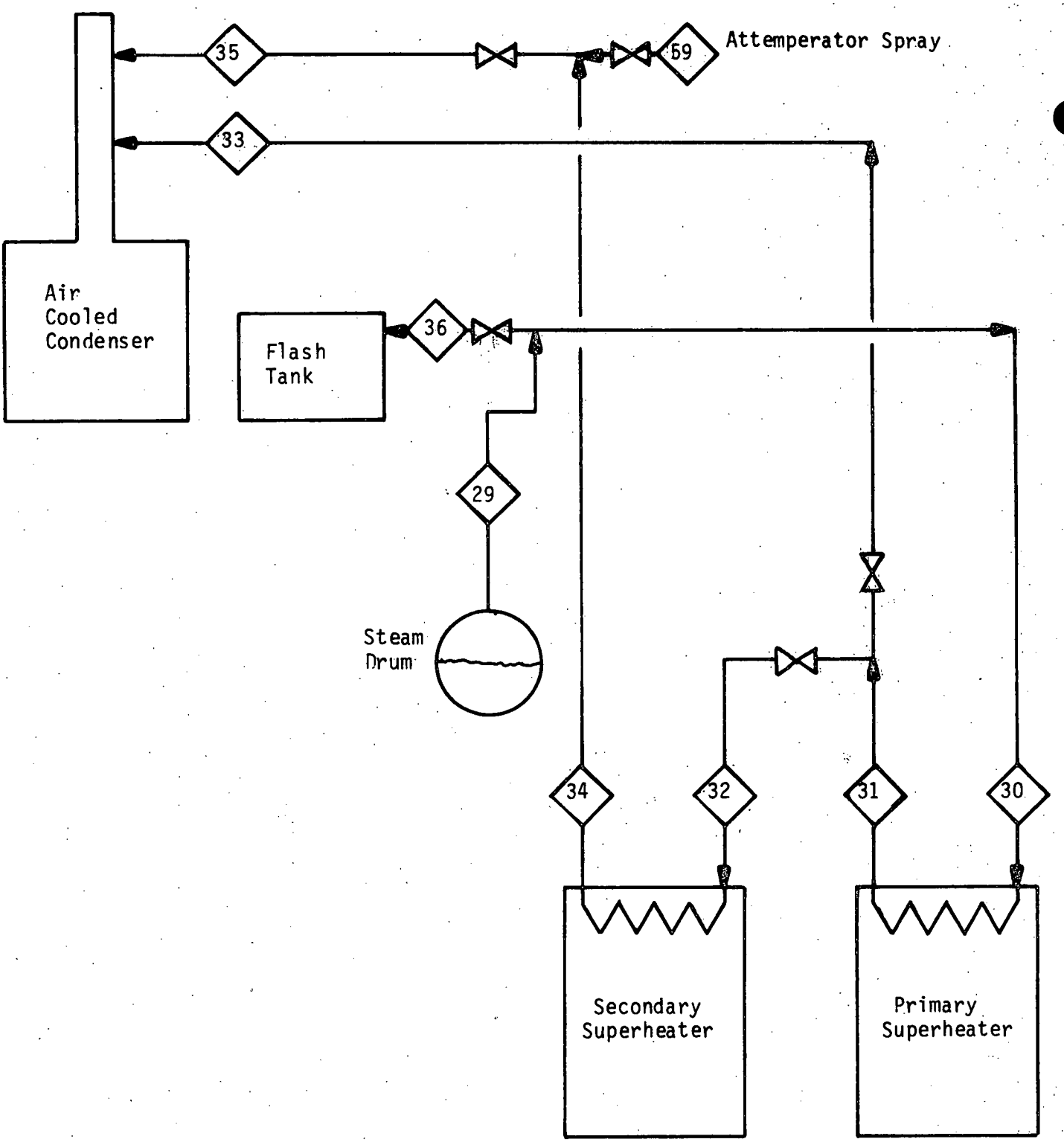

Figure 3-7 Superheated Steam Subsystem

temperature to 750F. At 750F and 1300 psig, the steam is still superheated. Before entering the collecting header of the air cooled condenser, the attemperated steam (Stream 35) is throttled to 624F and 110 psig. The throttling valve controls the pressure of the attemperated steam at 1300 psig.

3.1.5. Intermediate Temperature Air Heater Steam Subsystem

The process flow diagram for the intermediate temperature air heater (ITAH) steam subsystem is shown in Figure 3-8. The steam leaving the steam drum which bypasses the primary superheater enters the flash tank as Stream 36. Before entering the flash tank, the steam is throttled to 200 psig, 288F, and 82.6% quality. The throttling valve controls the pressure of the steam drum at 2800 psig. 43,840 lb/hr of saturated steam enters the flash tank which separates the water from the steam. 36,210 lb/hr of steam flows through two B&W cyclone separators and out of the flash tank as Stream 37. Stream 37 splits into two streams, Stream 41 and Stream 38. 29,340 lb/hr (Stream 41) is throttled to 110 psig and 358F and then enters the collecting header of the air cooled condenser. The throttling valve controls the pressure of the flash tank at 200 psig. 6870 lb/hr (Stream 38) is throttled to 125 psig and 363F and then enters the ITAH. The throttling valve controls the temperature of the ITAH exit steam at 1200F. 7630 lb/hr of condensate (Stream 42) discharges from the bottom of the flash tank and is throttled to 140 psig and 361F before it enters the collecting header of the air cooled condenser. The throttling valve controls the water level in the flash tank.

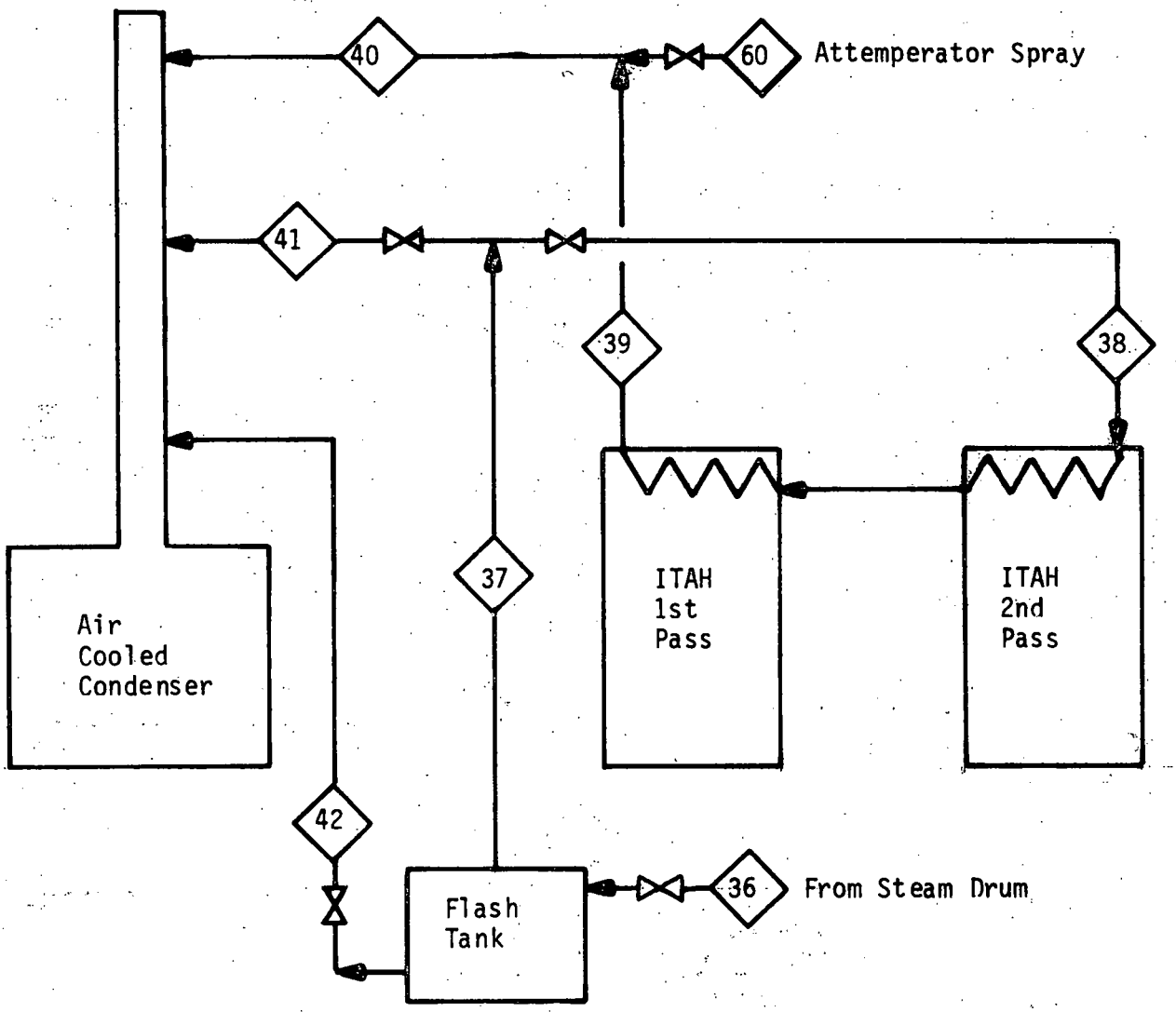

Figure 3-8 Intermediate Temperature Air Heater Steam Subsystem

In future plants, the ITAH will be used to preheat the primary combustion air. Since steam is cheaper than compressed air, it is being used in the 20 MWt ITAH to simulate the tube temperatures and corrosion aspects of future plants. The steam flows from the second pass of the ITAH to the first pass and exits the first pass at 1200F and 120 psig (Stream 39). It is next sprayed with 2350 lb/hr of attemperator water (Stream 60) to reduce the temperature of the steam and, therefore, the cost of the pipe. The attemperator spray cools the steam to 500F (Stream 40) before it enters the collecting header of the air cooled condenser. At 500F and 110 psig, the attemperated steam is still superheated, but enters the condenser collecting header at a much lower temperature.

3.1.6. Heat Rejection System

The process flow diagram of the heat rejection subsystem is shown in Figure 3-9. Since the steam generated does not flow to a turbine, the heat content it contains is disposed of in the heat rejection subsystem.

The streams entering the collecting header of the air cooled condenser have been described in Sections 3.1.4. and 3.1.5. Stream 42, the condensate from the flash tank, enters the bottom of the collecting header and attemperates the steam streams entering above it. Those streams include Stream 33, the steam exiting the primary superheater but bypassing the secondary superheater, Stream 35, the attemperated steam exiting the secondary superheater, Stream 40, the attemperated steam exiting the intermediate temperature air heater, and Stream 41,

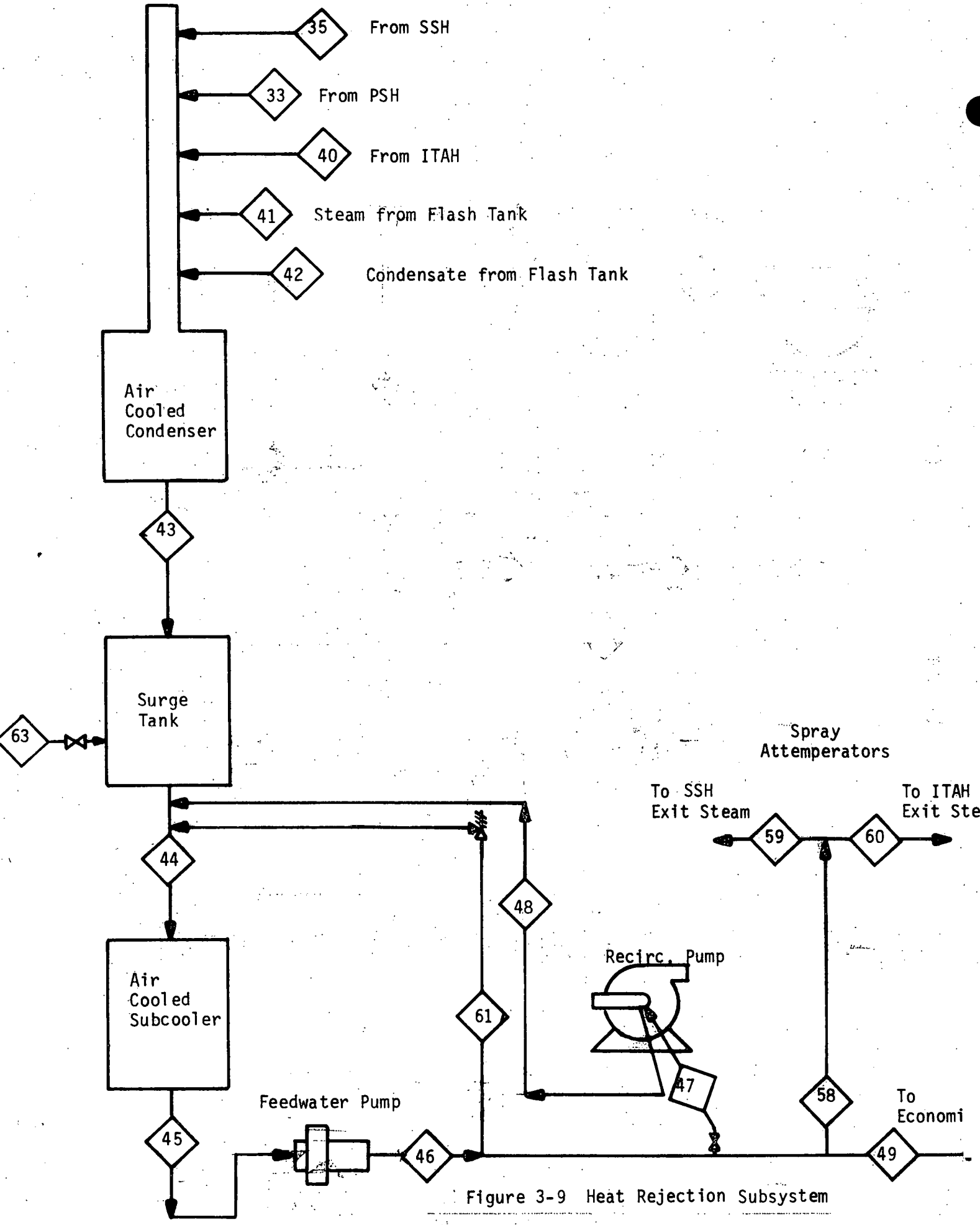

Figure 3-9 Heat Rejection Subsystem

the steam venting from the flash tank but bypassing the intermédiate temperature air heater. The five streams are cooled to 338F and condensed in the condenser which is controlled at 100 psig. The condensate exits the condenser at 55,100 lb/hr as Stream 43.

Stream 43 enters the surge tank which also receives make-up water from the CFFF. Make-up water (Stream 63) is controlled by the level in the surge tank. Since blowdown is intermittent and the heat and material balance was calculated with the assumption the sootblowers were not in use, the make-up water is assumed to have zero flow. The condensate exits the surge tank as Stream 44 where it is joined by Stream 48 and Stream 61. Stream 48 is the seal water for the recirculating pumps which does not leak into the boiler circulation system. 12,400 lb/hr of seal water join Stream 44 at 255F and 98 psig. Stream 61 is the recycle from the feedwater pump. It has a relief valve which opens when the pump overpressures, but is assumed to have no flow under normal operating conditions. Stream 44 then enters the air cooled subcooler at 67,500 lb/hr, 323F, and 98 psig. The subcooler exit temperature is controlled at 250F. The condensate leaves the subcooler at 250F and 95 psig as Stream 45 and becomes the suction of the feedwater pump.

The feedwater pump discharges the subcooled water (Stream 46) at 2890 psig. The water is pumped as seal water to the recirculating pumps (Stream 47), as attemperator spray to the secondary superheater and intermediate temperature air heater exit streams (Streams 58, 59, and 60), and as feedwater to the economizer (Stream 49).

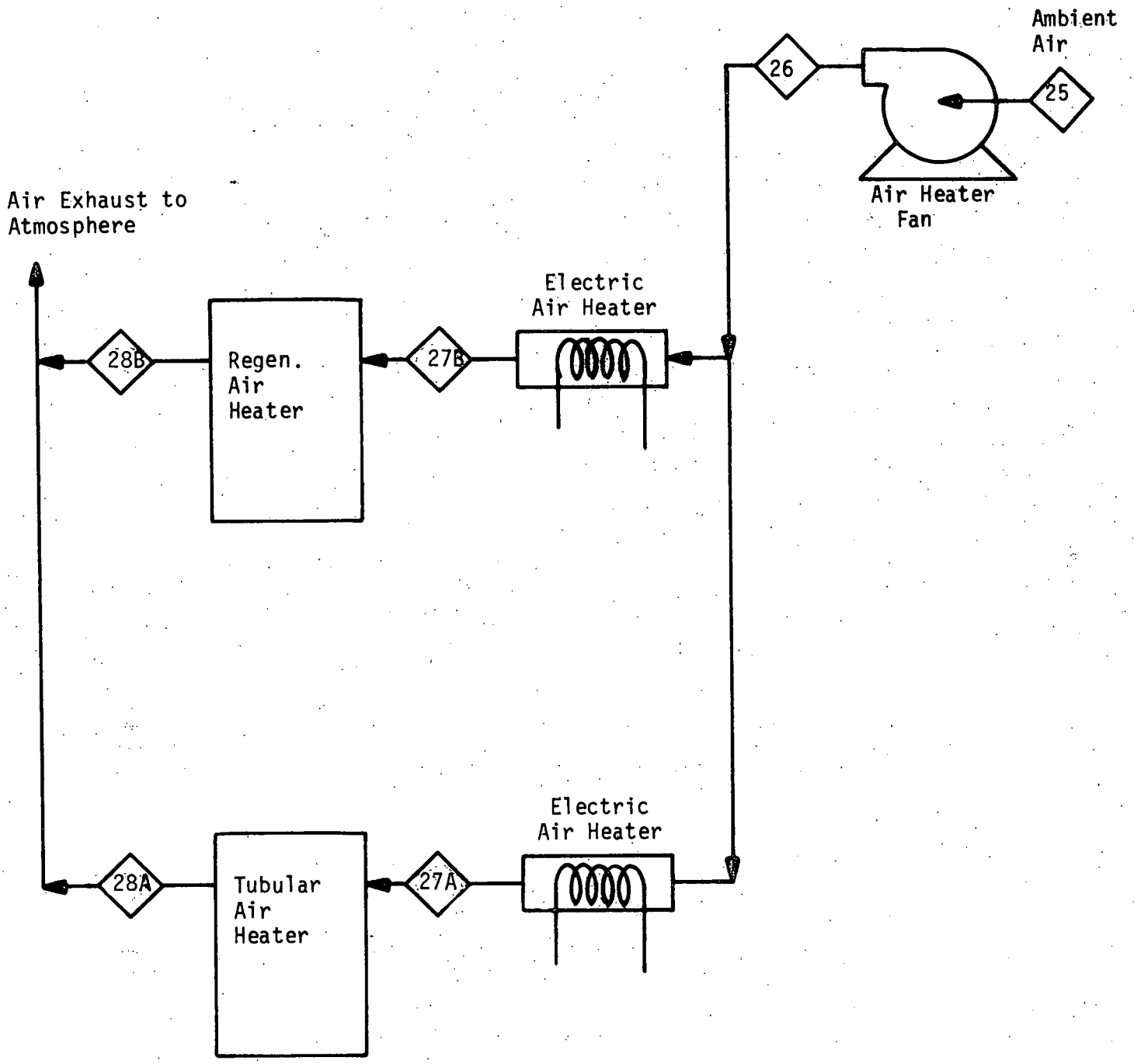

Figure 3-10 Regenerative and Tubular Air Heater Air Subsystem

3.1.7. Regenerative and Tubular Air Heater Air Subsystem

The process flow diagram for the regenerative and tubular air heater air subsystem is shown in Figure 3-10. Ambient air (Stream 25) flows into the air heater fan at 12000 lb/hr, 59F, and 1.0 atm. The fan pushes the air into the regenerative and/or tubular air heater. The air absorbs heat from the combustion gas and then exhausts to the atmosphere. Before the air (Stream 26) enters the regenerative or tubular air heaters, it is preheated to 125F (Stream 27a or 27b) in an electric heater. The regenerative and tubular air heaters are test units and, as such, will only operate periodically. An electric heater is provided for each test unit to allow the flexibility of operating both units, simultaneously, if desired. The air exhausts to atmosphere from the regenerative air heater at 670F (Stream 28b) and from the tubular air heater at 690F (Stream 28a)

.3.1.8. Channel and Diffuser Simulator Cooling Circuit Subsystem

The process flow diagram for the channel and diffuser simulator subsystem is given below in Figure 3-11. The channel and diffuser

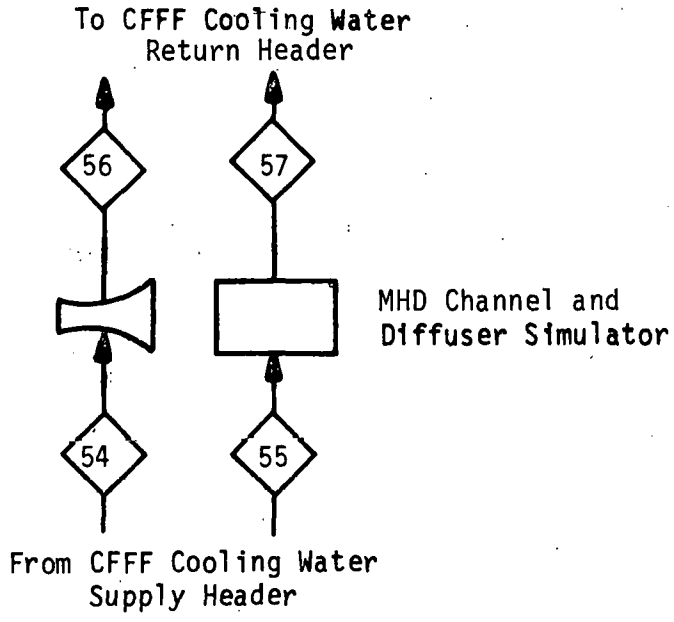

Figure 3-11 Channel and Diffuser Simulator Cooling Circuit Subsystem

simulator receives cooling water from the CFFF cooling water supply header. Stream 54 enters the cooling passages of the nozzle at 90F and 150 psig, and Stream 55 enters the cooling channels of the barrel under the same conditions. The flow rates and exit conditions are given in appendix B. Streams 56 and 57 exit the nozzle and barrel, respectively, and return to the CFFF cooling water system via a return header.

3.1.9. Ash and Seed Handling Subsystem

The process flow diagram for the ash and seed handling subsystem is shown in Figure 3-12a. The diagram includes the slag and seed dropout for the furnace and the ash and seed dropout for the remainder of the boiler (the secondary superheater, the first and second passes of the intermediate temperature air heater, and the primary superheater), the regenerative and tubular air heaters, the economizer, and the precipitator.

The slag and seed dropout for the furnace is shown in Stream 13. It is expected that only a small amount of seed will drop out in the furnace since the combustion gas is not cooled to the condensation temperature of the seed under normal operating conditions until it reaches the secondary superheater. However, some seed is likely to condense near and on the cooler surface of the membrane walls. The slag and seed which drop out will fall into a collecting tank filled with water where it will be cooled to 125F. The remainder of the slag and seed removal subsystem is shown in Figure 3-12b, Slag and Seed Sampling Subsystem. The de-asher scrapes the bottom of the collecting tank, carrying with it the large pieces of slag which it dewaters and dumps into a receiving tank. The tank may be weighed and/or taken away for sampling or disposal. Cooling water overflows from the collecting tank

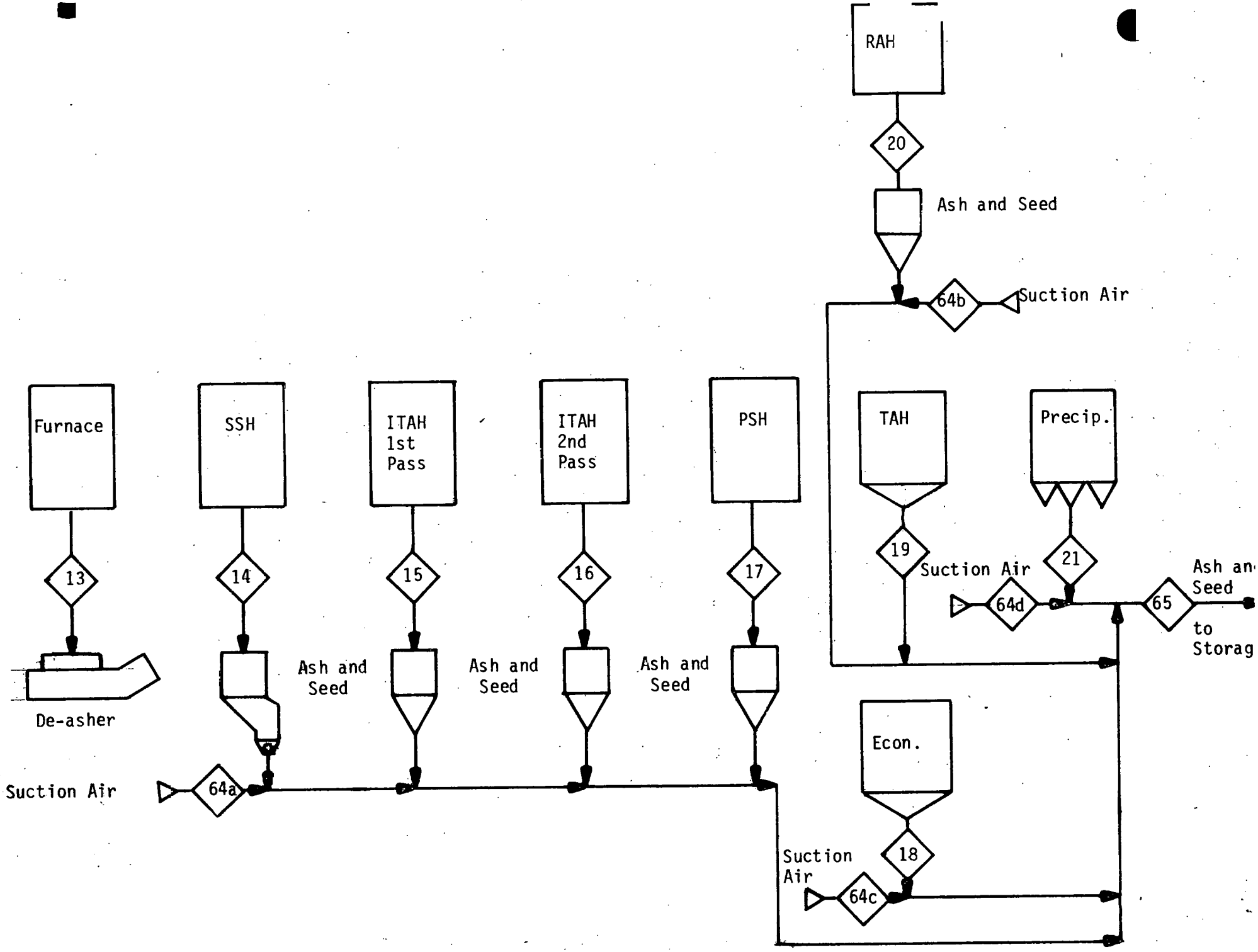

Figure 3-12a Ash and Seed Handling Subsystem

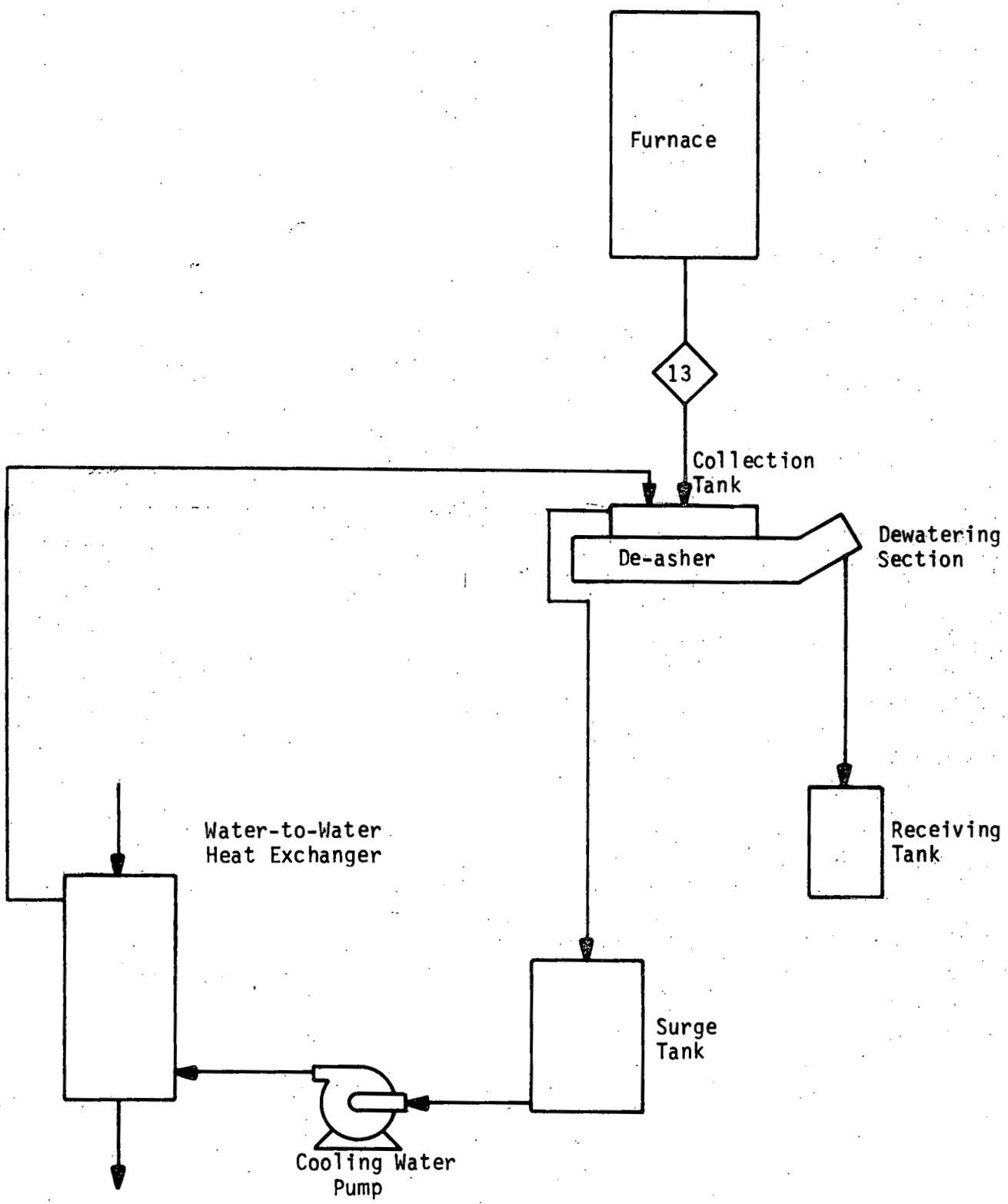

Figure 3-12b Slag and Seed Sampling Subsystem

and into a surge tank, carrying with it the finer particles. From there, it is pumped to a water cooled heat exchanger and then fed back into the collecting tank.

The ash and seed dropout for the remainder of the plant is handled in a dry system. For the remainder of the boiler, the ash and seed fall into collection hoppers which have an eight hour holding capacity. The ash and seed are pulled under 8" Hg of vacuum to the sampling or disposal area. 870 cfm of ambient air is also pulled by the vacuum pumps to transport the dry ash and spent seed. Because the seed may drop out of the secondary superheater in large chunks, a clinker grinder is provided to crush it into smaller pieces.

Each hopper may be emptied separately, and the ash and seed dropout sampled from each piece of equipment. The sampling subsystem is shown below in Figure 3-12c. The ash and seed are then pulled into a bag filter and weighed. For the hoppers containing a small amount of ash and seed, the solids will fall from the filter into a receiving hopper to be weighed and sampled. Exit conditions for the ash and seed sampling subsystem are not known, although the solids are expected to be under 500F. The ash and seed may bypass the sampling system and flow directly to the CFFF ash and seed disposal facilities if sampling is not desired.

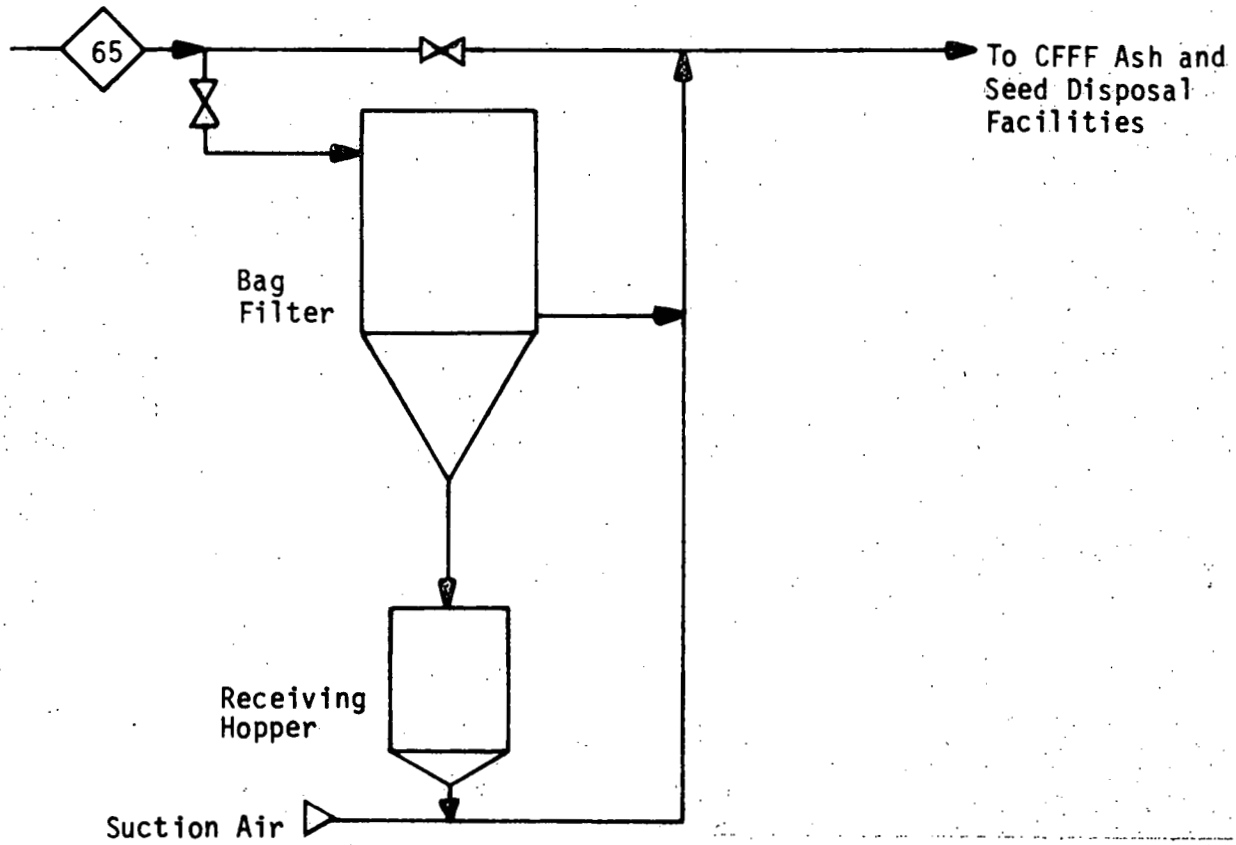

Figure 3-12c Ash and Seed Sampling Subsystem

3.1.10 Chemical Feed Subsystems

The process flow diagram of the chemical feed subsystems is shown in Figure 3-13. The chemical feeds include phosphate addition to the steam drum and hydrazine and ammonia additions to the feedwater. The chemicals shall each have a measuring tank, solution holding tank, and two (including one spare) injection pumps.

The phosphate feed subsystem will be used to combat water hardness. Trisodium phosphate (Stream 66) will be injected directly into the steam drum.

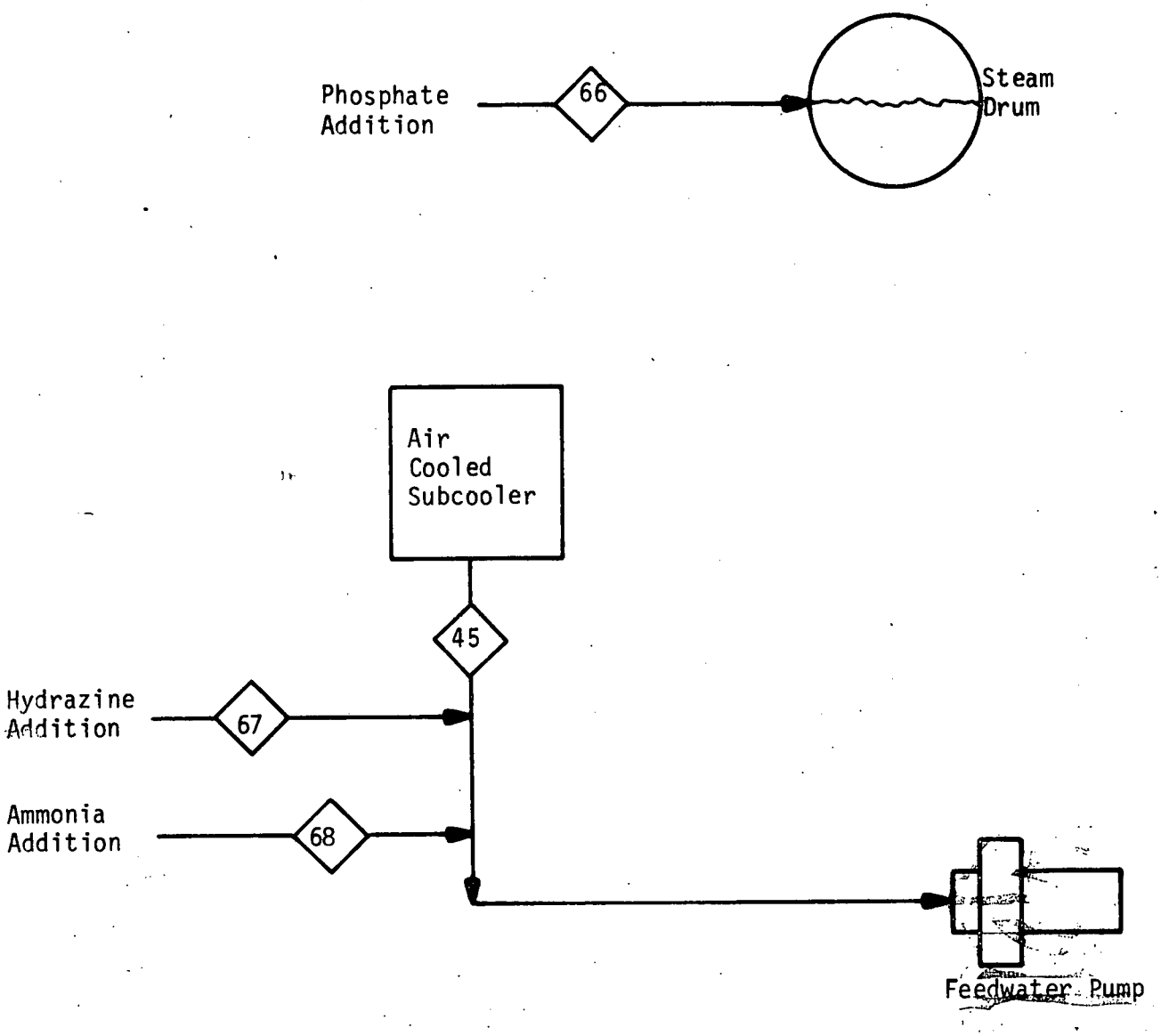

Figure 3-13 Chemical Feed Subsystems

The hydrazine feed subsystem will be used to neutralize trace acids formed in the condensate, as well as to scavenge oxygen. Hydrazine (Stream 67) will be injected into the feedwater (Stream 45) between the air cooled subcooler and the feedwater pump.

The ammonia feed subsystem will be used to maintain a pH in the range of 8.8 to 9.2 in the steam drum. Ammonia (Stream 68) will also be injected into Stream 45.

3.2. Heat and Material Balances

The heat and material balances for the HRSR system operating at 100% load, 85% load, and 70% load are presented in this section. To complete the balances, several assumptions had to be made. Listed below are the most important assumptions that were made for all three load conditions:

1. Combustor outlet conditions were determined from the AVCO combustor computer analysis for Illinois #6 coal furnished by DOE.
2. The combustion gas temperatures and enthalpies upstream of the Intermediate Temperature Air Heater were computed by the NASA Free Energy Minimization (FEM) Program. Also, gas compositions for all temperature ranges were computed by the FEM Program. The FEM Program calculates conditions only at chemical equilibrium.
3. The heat content of the combustion gas stream is based on total enthalpy, which is the sum of the heat of formation and sensible heat. This explains the negative values present. The heats of formation and specific heats for the combustion gas constituents were taken from the JANAF Thermochemical Data

tables, compiled and calculated by the Dow Chemical Company. The heat of formation for the ash and slag was considered to be 0 Btu/lb and the specific heat was obtained from experimental data.

4. The temperatures, enthalpies and pressures of water and steam are based on the ASME Steam Tables.
5. The balance was made assuming no sootblowing, a reasonable assumption since sootblowing is done intermittently.
6. Air is added at the secondary combustor to complete the combustion process with 5% excess air.
7. The boiler feed pump was assumed to be a reciprocating plunger type pump.

Assuming chemical equilibrium in order to determine the gas composition and thermal properties is reasonable and follows conventional design procedures. The main gas constituents N_2, CO_2, H_2O, and CO comprise about 97% of the gas mixture. Major reactions, such as the water-gas shift reaction are not kinetically limited. Sulfur formation and nitrous oxide decomposition reactions, while of interest, will not significantly affect the bulk gas composition and thermal properties.

The FEM program is used to determine the condensation point of pure seed material (K_2SO_4 and K_2CO_3). The extent to which slag-seed chemistry alters seed condensation is unknown and one of the objectives of the test program.

The ash and seed handling systems and the blowdown system operate intermittently, as mentioned in the previous section. Thus, the numbers

listed in the balances for these systems reflect the conditions present only during operation and are not time-averaged steady state conditions.

The integration of the gas, water, steam, and air paths is shown on Figure 3-14, the 20 MWt Process Flow Diagram. This overall plant process diagram is the same as Figure 3-1, but it is shown again here as a reference to identify the stream numbers in the heat and material balance tables.

Figures 3-15 and 3-16 identify the various control devices in the steam-water cycle and air-gas circuits respectively.

The purpose of each control device is explained symbolically by a dashed line representing the flow of intelligence from the primary variable to the control device. To improve the response and/or stability, other intelligence (feed forward, secondary variable, etc.) may also exert influence over the control device as explained in the control section.

The tabulated conditions for the various streams in Figure 3-15 are specified downstream of the control device. One exception to this is at steam valve SV-2, located after the secondary superheater spray attemperator. Conditions here for Stream 35 are specified upstream of the valve.

The design ambient temperature range is 17F to 99F (see Section 4.9.4. for further clarification). The design humidity, which has a probability of occurring 1% of the time at the site, corresponds to a 96F dry-bulb temperature and a 77F wet-bulb temperature.

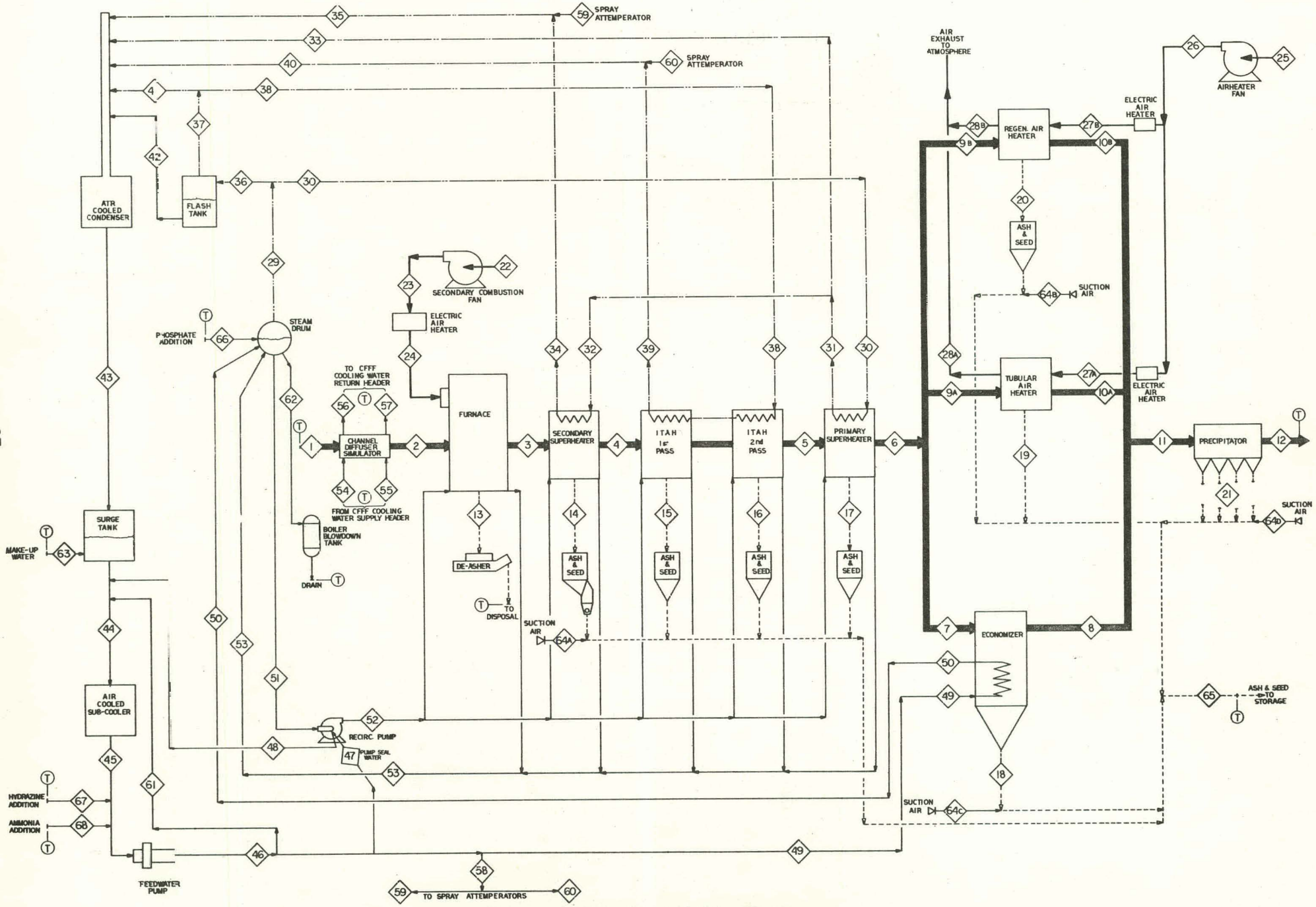

Figure 3-14 20 MWt MHD Plant
Process Flow Diagram

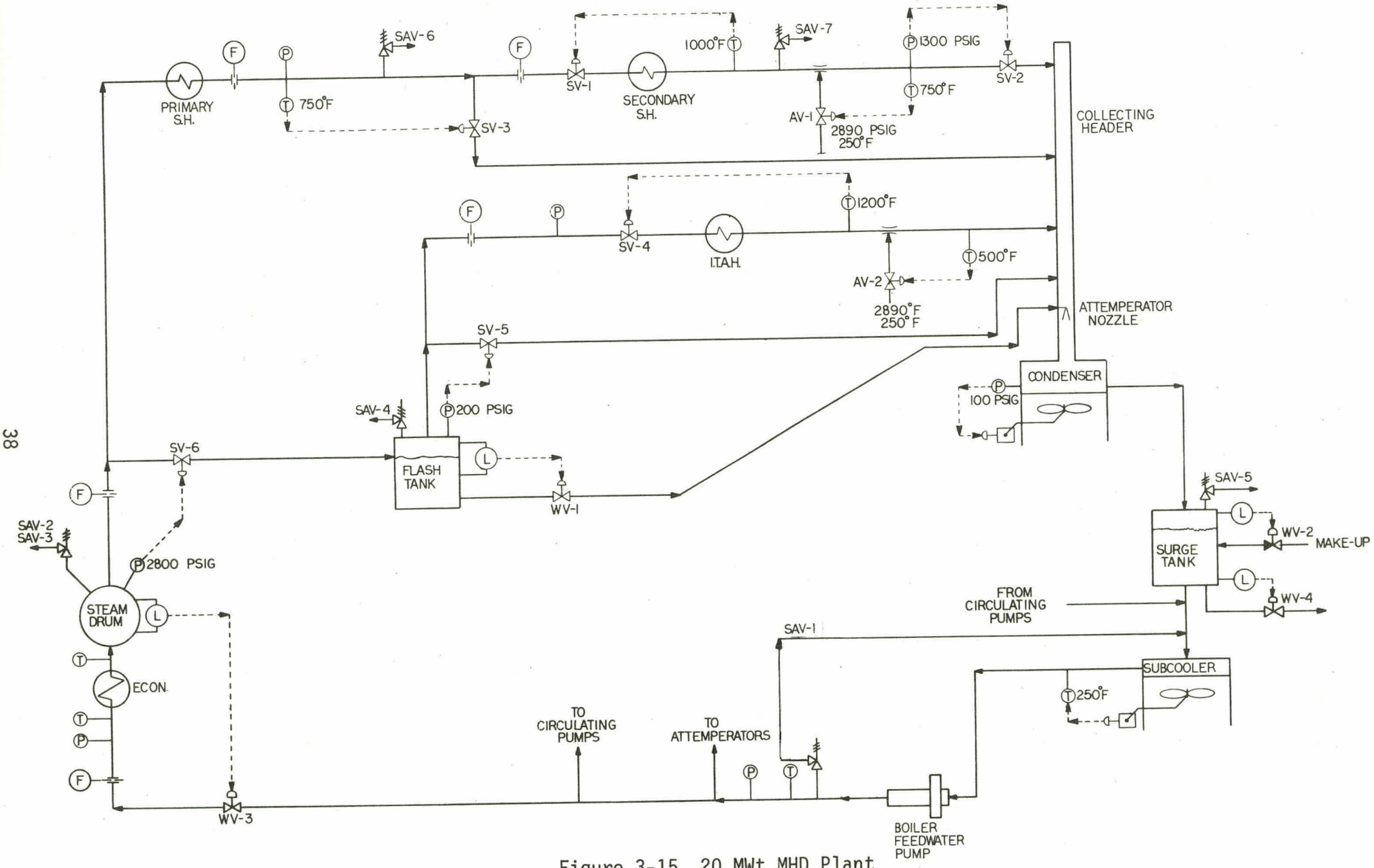

Figure 3-15 20 MWt MHD Plant
Steam and Water
Flow Control Diagram

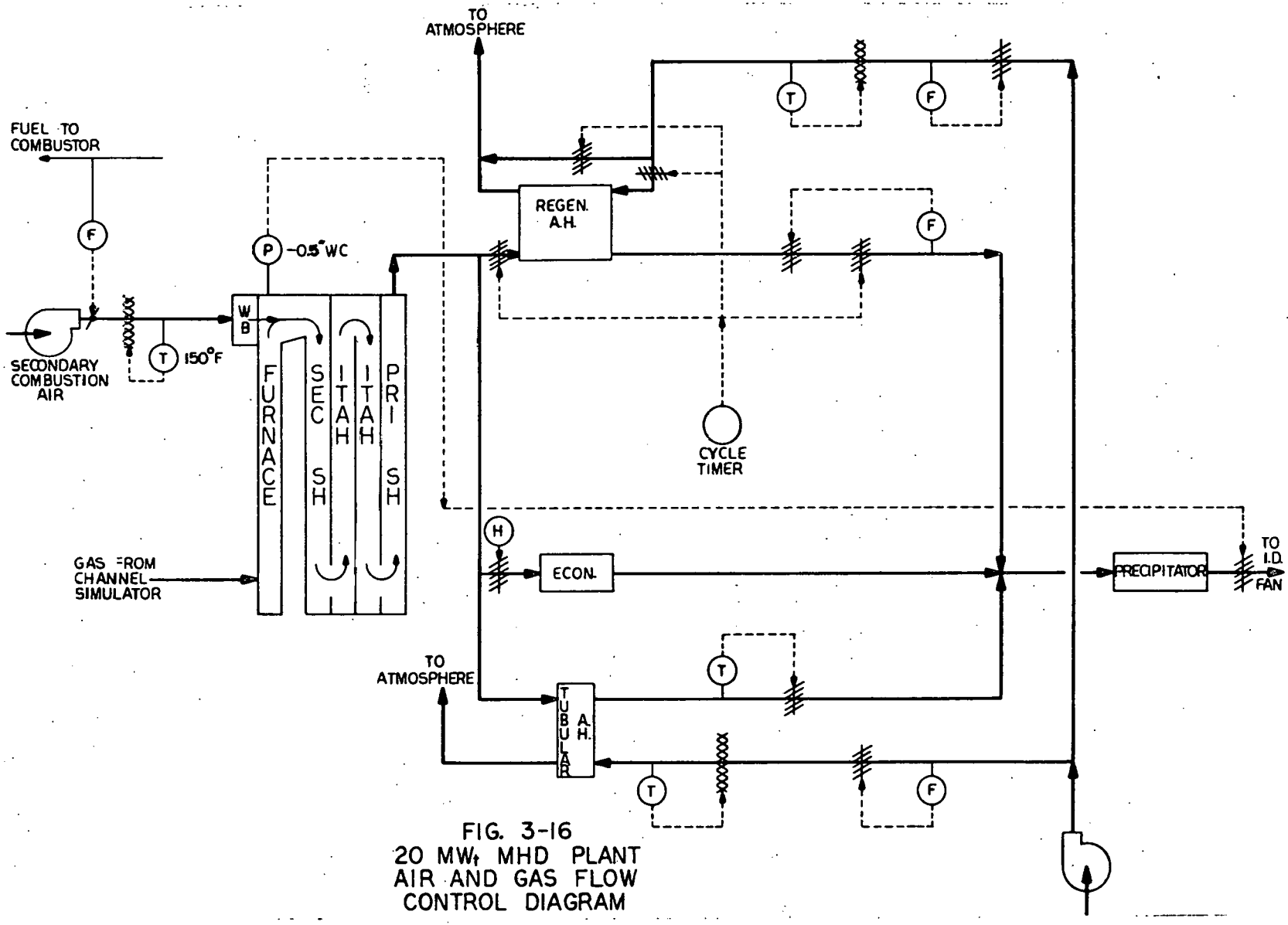

FIG. 3-16
20 MW_t MHD PLANT
AIR AND GAS FLOW
CONTROL DIAGRAM

As mentioned in the Preliminary Test Plan, Document No. BW10018-P-4, a portion of the overall test period will be devoted to part load studies. One of the important reasons for running part load tests is to evaluate the change in seed dropout with a change in the combustion gas temperature profile.

The following three sections provide the expected operating conditions of the HRSR system. Section 3.2.1. describes 100% load conditions, while Sections 3.2.2. and 3.2.3. provide part load operating conditions of 85% and 70%, respectively.

3.2.1. 100% Load Conditions

The 100% load conditions listed in this section are the same as those described in Section 3.1., System Description.

A summary of the 100% load heat and material balance is presented in tabular form in Table 3-1. Table 3-1 indicates the heat rejected by the HRSR gas stream. The heat absorbed by the water and steam streams which are in direct contact with the HRSR gas stream is also indicated in Table 3-1.

Table 3-4 shows the conditions of the individual process streams. The operating conditions for the tubular and regenerative test air heaters are listed, but are not included in the overall balance because they will be operated only intermittently. Also, the sensible heat content of the solids dropping out of the gas enclosure (streams 13-21) is listed to provide an estimate of heat loss from the system by this means.

Table 3-1 Heat and Material Balance Summary for 100% Load Conditions

Description	Stream Number	Mass Flow In (lb/hr)	Stream Net Heat In (mmB/hr)	Mass Flow Out (lb/hr)	Stream Net Heat Out (mmB/hr)
Simulator	1	33,531	-15.51		
Secondary Combustion Air	24	6,789	- 0.38		
Slag Removed	13			70	+ 0.04
Solids Removed	14			711	- 2.22
Solids Removed	15			61	- 0.18
Solids Removed	16			37	- 0.12
Solids Removed	17			39	- 0.12
Solids Removed	18			3	- 0.01
Solids Removed	21			93	- 0.20
Exhaust Gas	12			39,306	-69.41
Gas Side Total		40,320	-15.89	40,320	-72.22

Total Heat Available from Gas:
-15.89 - (-72.22) = 56.33

Heat Extraction from Total Heat Available:

Stream Number	Description	
56, 57-54, 55	Simulator Enclosure	6.94
53-52	Furnace	19.86
	Remaining Boiler Encl.	17.70
34-32	SSH	2.05
39-38	ITAH	2.96
31-30	PSH	1.29
50-49	Economizer	5.34
	Precip. Rad. Loss	0.09
Total Heat Extractions from Available Heat		56.33

As mentioned in the introduction, the Stream 1 input values are based on the government furnished computer printouts for the AVCO combustor. For 100% load, Stream 1 merely reflects the combustor outlet temperature, pressure, enthalpy and composition specified in the computer run. The slag rejection rate from the combustor was assumed to be 70%.

3.2.2. 85% Load Conditions

A summary of the 85% load heat and material balance is given in Table 3-2. Table 3-5 shows the conditions of the individual process streams.

The Stream 1 input conditions for 85% load were determined by taking the gas conditions from the 100% load AVCO combustor analysis just after coal combustion and putting them into the FEM Program. The Program was run with the same relative amount of constituents and the same adiabatic flame temperature. Flow rate was reduced to 85%, although it was assumed the combustion gases gave up the same total amount of heat to the combustor as full load. It was also assumed that 75% of the slag dropped out in the combustor. The seed was added at this point, which resulted in a combustor exit temperature and pressure of 4172F and 5.1 atm, respectively.

The part load combustor analyses from DOE were received too late to incorporate into this report. However, the combustor output from the DOE 85% part load computer run is in very close agreement with the combustor output derived from the method described above. Percent slag

Table 3-2 Heat and Material Balance Summary for 85% Load Conditions

Description	Stream Number	Mass Flow In (lb/hr)	Stream Net Heat In (mmB/hr)	Mass Flow Out (lb/hr)	Stream Net Heat Out (mmB/hr)
Simulator	1	28,358	-14.45		
Secondary Combustion Air	24	5,771	- 0.32		
Slag Removed	13			80	0.00
Solids Removed	14			630	- 1.96
Solids Removed	15			44	- 0.13
Solids Removed	16			23	- 0.07
Solids Removed	17			8	- 0.03
Solids Removed	18			2	- 0.01
Solids Removed	21			60	- 0.17
Exhaust Gas	12			33,282	-58.57
Gas Side Total		34,129	-14.77	34,129	-60.94

Total Heat Available from Gas:
-14.77 -(-60.94) = 46.17

Heat Extraction from Total Heat Available:

Stream Number	Description	
56, 57-54, 55	Simulator Enclosure	6.94
53-52	Furnace	17.02
	Remaining Boiler Encl.	14.34
34-32	SSH	1.69
39-38	ITAH	1.90
31-30	PSH	0.99
50-49	Economizer	4.31
	Precip. Rad. Loss	0.08
Total Heat Extractions from Available Heat		46.17

rejection, total flow rate, exit temperature, exit pressure and gas composition were all either very close or the same for both methods. A comparison of the B&W calculated part load conditions and the DOE part load combustor analyses is given in Table 3-7.

Performance for 85% load is comparable to 100% load. It is expected that most of the slag will drop out in the combustor and furnace, and that most of the seed will drop out in the secondary superheater. The intermediate temperature air heater steam achieves the 1200F exit temperature, although the flow was reduced to 4300 lb/hr. The steam leaving the primary superheater was shy of its 750F set point by 4F, however. Again, it was necessary to reduce the PSH steam flow. Operating at 85% load results in lower gas side temperatures and water-steam side flow rates, but overall steam temperatures are little affected.

3.2.3. 70% Load Conditions

A summary of the 70% load heat and material balance is presented in tabular form in Table 3-3. Table 3-6 shows the conditions of the individual process streams.

The Stream 1 input conditions for 70% load were determined in the same manner as 85% load. The gas conditions from the AVCO combustor directly after combustion of the coal and oil were input to the FEM Program. Total flow was reduced to 70%, but the adiabatic flame temperature and relative amount of constituents were kept the same. Assuming the same combustor heat absorption as 100% load and assuming 80% slag rejection, the seed was added to the program. The resulting combustion outlet temperature was 4092F. Based on the reduced gas flow, combustor outlet pressure was estimated at 4.2 atmospheres.

Table 3-3 Heat and Material Balance Summary for 70% Load Conditions

Description	Stream Number	Mass Flow In (lb/hr)	Stream Net Heat In (mmB/hr)	Mass Flow Out (lb/hr)	Stream Net Heat Out (mmB/hr)
Simulator	1	23,340	-12.94		
Secondary Combustion Air	24	4,752	- 0.27		
Slag Removed	13			68	- 0.09
Solids Removed	14			472	- 1.52
Solids Removed	15			44	- 0.14
Solids Removed	16			23	- 0.07
Solids Removed	17			17	- 0.06
Solids Removed	18			1	- 0.00
Solids Removed	21			58	- 0.15
Exhaust Gas	12			27,409	-48.43
Gas Side Total		28,092	-13.21	28,092	-50.46

Total Heat Available from Gas:
-13.21 - (-50.46) = 37.25

Heat Extraction from Total Heat Available:

Stream Number	Description	
56, 57-54, 55	Simulator Enclosure	4.98
53-52	Furnace	14.95
	Remaining Boiler Encl.	10.72
34-32	SSH Platen	1.30
39-38	ITAH	1.06
31-30	PSH	0.70
50-49	Economizer	3.47
	Precip. Rad. Heat Loss	0.07
Total Heat Extractions from Available Heat		37.25

As with 85% load, the combustor output from the DOE 70% part load computer analysis is in very close agreement with the combustor output derived from the method described above.

The results of the heat and material balance reveal that 70% load is about as low as this system can be turned down and still maintain high operating steam temperatures. For example, the intermediate temperature air heater steam outlet temperature can reach only 1150F. Also, the primary superheater steam outlet temperature is only 741F, just below the desired 750F. Steam production is 35,156 lb/hr, down 16,600 lb/hr from full load. Turning down to loads less than 70% will cause steam quality and temperatures to drop even further.

The furnace exit gas temperature for 70% load is down to about 2310F. The FEM Program indicates that more liquid phase K_2SO_4 may be present in the furnace at this load than at 100% load. Thus, more seed compounds are assumed to fall out of the furnace at 70% load than at 85% and 100% loads.

It is evident that steam temperatures start to drop significantly at 70% load. Thus 70% load represents a reasonable low point for part load testing of this HRSR system.

1	STREAM NUMBER	1	2	3	4	5	6	7	8	9a	9b
2	STREAM DESCRIPTION	Combustion	Combustion	Combustion	Combustion	Combustion	Combustion	Combustion	Combustion	Combustion	Combustion
3		gas to	gas to	gas to	gas to	gas to	gas from	gas to	gas from	gas to	gas to
4		channel &	furnace	secondary	intermediate	primary	primary	economizer	economizer	tubular	regenerative
5		diffuser		superheater	temperature	superheater	superheater			air heater	air heater
6		simulator			air heater						
7											
8	PROCESS CONDITIONS										
9	TEMPERATURE (^{o}F)	4250	3800	2600	1650	1009	823	823	329	823	823
10	PRESSURE (IN. WG.)	6.0 ATM	-0.1 IN WG	-0.5 IN WG	-0.6 IN WG	-1.0 IN WG	-1.3 IN WG	-3.3 IN WG	-9.3 IN WG	-1.8 IN WG	-1.8 IN WG
11	PRESSURE (PSIG)	73.5	-0.004	-0.02	-0.02	-0.04	-0.05	-0.12	-0.34	-0.07	-0.07
12	FLOW RATE (STREAM TOTAL)										
13	LB MOLE/HR	1120.6	1118.4	1294.0	1294.6	1295.1	1295.1	1295.1	1295.1	205.1	197.7
14	LB/HR	33531	33531	40250	39539	39441	39402	39402	39399	6225	6000
15	PHYSICAL PROPERTIES										
16	MOLE WT	29.92	29.98	30.80	30.36	30.35	30.35	30.35	30.35	30.35	30.35
17	STATE (S, L, G)	G, L	G, L	G, L, S	G, S	G, S	G, S	G, S	G, S	G, S	G, S
18	ENTHALPY, BASE 77°F										
19	MMB/HR, TOTAL HEAT	-15.51	-22.45	-42.73	-54.63	-62.17	-64.19	-64.19	-69.52	-10.14	-9.77
20	BTU/LB, TOTAL SPECIFIC HEAT	-462.5	-669.5	-1061.6	-1381.6	-1576.3	-1629.1	-1629.1	-1764.5	-1629.1	-1629.1
21	MMB/HR, SENSIBLE HEAT										
22	COMPOSITION (M/HR) (GAS OR LIQUID)										
23	CO	2172	1892	5							
24	CO_2	9948	10387	13350	13360	13356	13356	13356	13356	2115	2039
25	H_2	18	17								
26	H_2O	3024	3074	3352	3418	3419	3419	3419	3419	542	522
27	NO	138	68	24	2						
28	N_2	16558	16591	21760	21772	21773	21773	21773	21773	3449	3324
29	O	14	8								
30	OH	129	77	4							
31	O_2	220	128	456	410	411	411	411	411	65	63
32	SO	13	10								
33	SO_2	310	314	224							
34	OTHERS (K, KO, KOH, S, H, ETC.)	987	965	1017	353	346	346	346	346	54	52
35	TOTAL	33531	33531	40192	39315	39305	39305	39305	39305	6225	6000
36	SOLIDS (LB/HR)										
37	K_2CO_3					5	3	3	3		
38	K_2SO_4				178	92	57	57	55		
39	ASH/SLAG			58	46	39	37	37	36		
40	TOTAL			58	224	136	97	97	94		

NOTES: 1 ATMOSPHERIC PRESSURE = 14.696

PROCESS MHD
CUSTOMER DEPARTMENT OF ENERGY
PLANT 20 MWt HRSR UNIT

BWFP 516

Babcock & Wilcox
HEAT AND MATERIAL BALANCE

CONTRACT NO. 891-1038
PROPOSAL NO.
DATE

OPERATING CONDITIONS
100% Load
Page 1 of 8

Table 3-4 Heat and Material Balance - 100% Load Conditions of Individual Process Streams

BWFP 516

Babcock & Wilcox

HEAT AND MATERIAL BALANCE

PROCESS MHD
CUSTOMER DEPARTMENT OF ENERGY
PLANT 20 MWt HRSR UNIT

CONTRACT NO. 891-1038
PROPOSAL NO.
DATE

OPERATING CONDITIONS 100% Load

NOTES: 1 ATMOSPHERIC PRESSURE = 14.696

1	STREAM NUMBER	10a	10b	11	12	13	14	15	16	17	18
2	STREAM DESCRIPTION	Combustion	Combustion	Combustion	Combustion	Slag And	Ash And	Ash And	Ash And	Ash And	Ash And
3		gas from	gas from	gas to	gas to	Seed	Seed	Seed	Seed	Seed	Seed
4		tubular	regenerative	electro-	ID fan	Dropout In	Dropout In	Dropout In	Dropout In	Dropout In	Dropout In
5		air heater	air heater	static	and stack	Furnace	Secondary	ITAH	ITAH	Primary	Economizer
6				precipitator			Superheater	1st Pass	2nd Pass	Superheater	
7											
8	PROCESS CONDITIONS										
9	TEMPERATURE (^{o}F)	330	331	329	320	2800	1650	1520	1009	950	450
10	PRESSURE (IN. WG.)	-3.0 IN WG	-3.0 IN WG	-11.5 IN WG	-13.8 IN WG	-0.1 IN WG	-0.6 IN WG	-0.7 IN WG	-1.0 IN WG	-1.1 IN WG	-6.3 IN WG
11	PRESSURE (PSIG)	-0.11	-0.11	-0.42	-0.50	-0.004	-0.02	-0.03	-0.04	-0.04	-0.23
12	FLOW RATE (STREAM TOTAL)										
13	LB MOLE/HR	205.1	197.7	1295.1	1295.1						
14	LB/HR	6225	6000	39399	39306	70	711	61	37	39	3
15	PHYSICAL PROPERTIES										
16	MOLE WT	30.35	30.35	30.35	30.35						
17	STATE (S, L, G)	G, S	G, S	G, S	G, S	L	S	S	S	S	S
18	ENTHALPY, BASE 77°F										
19	MMB/HR, TOTAL HEAT	-10.96	-10.54	-69.52	-69.41	0.04	-2.22	-0.18	-0.12	-0.12	-0.01
20	BTU/LB, TOTAL SPECIFIC HEAT	-1760.9	-1757.2	-1764.5	-1765.9	531.4	-3127.0	-2934.4	-3134.5	-3171.3	-2000
21	MMB/HR, SENSIBLE HEAT					0.07	0.26	0.02	0.01	0.01	~ 0.0
22	COMPOSITION (M/HR) (GAS OR LIQUID)										
23	CO										
24	CO_2	2115	2039	13356	13356						
25	H_2										
26	H_2O	542	522	3419	3419						
27	NO										
28	N_2	3449	3324	21773	21773						
29	O										
30	OH										
31	O_2	65	63	411	411						
32	SO										
33	SO_2										
34	OTHERS (K, KO, KOH, S, H, ETC.)	54	52	346	346						
35	TOTAL	6225	6000	39305	39305						
36	SOLIDS (LB/HR)										
37	K_2CO_3			3				3	2	2	
38	K_2SO_4			55		10	699	53	33	35	2
39	ASH/SLAG			36	1	60	12	5	2	2	1
40	TOTAL			94	1	70	711	61	37	39	3

Table 3-4 Cont.

1	STREAM NUMBER	19	20	21	22	23	24	25	26	27a	27b	
2	STREAM DESCRIPTION	Ash & Seed	Ash & Seed	Ash & Seed	Ambient	Secondary	Secondary	Ambient Air	Air to Pre-	Preheated	Preheated	
3		Dropout In	Dropout In	Dropout In	Air for	Combustion	Combustion	for Tubular	heater(s)	Air To	Air To Re-	
4		Tubular	Regenera-	Electro-	Secondary	Air to	Air to	and/or Re-	For Tubular	Tubular	generative	
5		Air Heater	tive Air	static Pre-	Combustion	Preheater	Furnace	generative	and/or Re-	Air Heater	Air Heater	
6			Heater	cipitator				Air Heaters	generative			
7									Air Heaters			
8	PROCESS CONDITIONS											
9	TEMPERATURE (^{o}F)			325	59	59	150	59	59	125	125	
10	PRESSURE (IN. WG.)			-11.5 IN WG	1.0 ATM	+16.9 INWG	+16.4 IN WG	1.0 ATM	+4.1 IN WG	+3.6 IN WG	+3.6 IN WG	
11	PRESSURE (PSIG)			-0.42	0.00	+0.61	+0.59	0.00	+0.15	+0.13	+0.13	
12	FLOW RATE (STREAM TOTAL)											
13	LB MOLE/HR				237.2	237.2	237.2	419.6	419.6	209.8	209.8	
14	LB/HR	~ 0	~ 0	93	6789	6789	6789	12000	12000	6000	6000	
15	PHYSICAL PROPERTIES											
16	MOLE WT				28.6	28.6	28.6	28.6	28.6	28.6	28.6	
17	STATE (S, L, G)			S	G	G	G	G	G	G	G	
18	ENTHALPY, BASE 77°F											
19	MMB/HR, TOTAL HEAT			-0.20	-0.55	-0.55	-0.38	-0.99	-0.99	-0.37	-0.37	
20	BTU/LB, TOTAL SPECIFIC HEAT			-2161.7	-80.9	-80.9	-56.3	-80.9	-80.9	-62.4	-62.4	
21	MMB/HR, SENSIBLE HEAT			0.01								
22	COMPOSITION (M/HR) (GAS OR LIQUID)											
23	CO											
24	CO_2											
25	H_2											
26	H_2O				87	87	87	154	154	77	77	
27	NO											
28	N_2				5151	5151	5151	9104	9104	4552	4552	
29	O											
30	OH							2742	2742	1371	1371	
31	O_2				1551	1551	1551					
32	SO											
33	SO_2											
34	OTHERS (K, KO, KOH, S, H, ETC.)											
35	TOTAL				6789	6789	6789	12000	12000	6000	6000	
36	SOLIDS (LB/HR)											
37	K_2CO_3			3								
38	K_2SO_4			55								
39	ASH/SLAG			35								
40	TOTAL	~ 0	~ 0	93								

NOTES: 1 ATMOSPHERIC PRESSURE = 14.696

PROCESS MHD
CUSTOMER DEPARTMENT OF ENERGY
PLANT 20 MWt HRSR UNIT

CONTRACT NO. 891-1038
PROPOSAL NO.
DATE

OPERATING CONDITIONS
100% Load
Page 3 of 8

Babcock & Wilcox
HEAT AND MATERIAL BALANCE

BWFP 516

Table 3-4 Cont.

1	STREAM NUMBER	28a	28b	29	30	31	32	33	34	35	36
2	STREAM DESCRIPTION	Air Exhaust	Air Exhaust	Steam	Steam To	Steam	Steam To	Bypass	Steam From	Steam From	Steam To
3		From	From Regen-	From	Primary	From	Secondary	Steam From	Secondary	SSH To	Flash
4		Tubular	erative Air	Steam	Superheater	Primary	Superheater	PSH to Con-	Superheater	Condenser	Tank
5		Air Heater	Heater to	Drum		Superheater	After	denser Aft.	Before	After	After
6		to Atmos-	Atmosphere				Throttle	Throttle	Attemp.	Attemp.	Throttle
7		phere									
8	PROCESS CONDITIONS										
9	TEMPERATURE (^{o}F)	690	670	685	685	750	618	403	1000	750	388
10	PRESSURE (IN. WG.)	+3.0 IN WG	+2.9 IN WG								
11	PRESSURE (PSIG)	+0.11	+0.10	2795	2790	2755	1335	110	1310	1300	200
12	FLOW RATE (STREAM TOTAL)										
13	LB MOLE/HR	209.8	209.8	2872.1	439.2	439.2	418.7	20.5	418.7	477.1	2433.0
14	LB/HR	6000	6000	51756	7914	7914	7545	369	7545	8598	43842
15	PHYSICAL PROPERTIES										
16	MOLE WT	28.6	28.6	18.02	18.02	18.02	18.02	18.02	18.02	18.02	18.02
17	STATE (S, L, G)	G	G	G	G	G	G	G	G	G	G, L
18	ENTHALPY, BASE 77°F										
19	MMB/HR, TOTAL HEAT	0.47	0.44	54.53	8.34	9.69	9.23	0.45	11.28	11.52	46.19
20	BTU/LB, TOTAL SPECIFIC HEAT	79.0	73.8	1053.6	1053.6	1223.8	1223.8	1223.8	1495.5	1339.9	1053.6
21	MMB/HR, SENSIBLE HEAT										
22	COMPOSITION (M/HR) (GAS OR LIQUID)										
23	CO										
24	CO_2										
25	H_2										
26	H_2O	77	77	51756	7914	7914	7545	369	7545	8598	43842
27	NO										
28	N_2	4552	4552								
29	O										
30	OH	1371	1371								
31	O_2										
32	SO										
33	SO_2										
34	OTHERS (K, KO, KOH, S, H, ETC.)										
35	TOTAL	6000	6000	51756	7914	7914	7545	369	7545	8598	43842
36	SOLIDS (LB/HR)										
37	K_2CO_3										
38	K_2SO_4										
39	ASH/SLAG										
40	TOTAL										

NOTES: 1 ATMOSPHERIC PRESSURE = 14.696

PROCESS MHD
CUSTOMER DEPARTMENT OF ENERGY
PLANT 20 MWt HRSR UNIT

CONTRACT NO. 891-1038
PROPOSAL NO.
DATE

OPERATING CONDITIONS 100% Load

Page 4 of 8

Babcock & Wilcox
HEAT AND MATERIAL BALANCE

BWFP 616

Table 3-4 Cont.

BWFP 516

Babcock & Wilcox

HEAT AND MATERIAL BALANCE

PROCESS MHD
CUSTOMER DEPARTMENT OF ENERGY
PLANT 20 MWt HRSR UNIT
NOTES: 1 ATMOSPHERIC PRESSURE = 14.696

CONTRACT NO. 891-1038
PROPOSAL NO.
DATE

OPERATING CONDITIONS 100% Load

	STREAM NUMBER	37	38	39	40	41	42	43	44	45	46
2	STREAM DESCRIPTION	Steam From Flash Tank	Flash Tank Steam To ITAH After Throttle	Steam From ITAH Before Attemp.	Steam From ITAH To Condenser After Attemp.	Flash Tank Steam To Condenser After Throttle	Flash Tank Condensate To Condenser After Throttle	Condensate From Condenser To Surge Tank	Water From Surge Tank To Subcooler	Water From Subcooler To Feedwater Pump	Water From Feedwater Pump
8	PROCESS CONDITIONS										
9	TEMPERATURE (^{O}F)	388	363	1200	500	358	361	338	323	250	250
10	PRESSURE (IN. WG.)										
11	PRESSURE (PSIG)	200	125	120	110	110	140	100	98	95	2890
12	FLOW RATE (STREAM TOTAL)										
13	LB MOLE/HR	2009.5	381.2	381.2	511.5	1628.4	423.4	3060.1	3748.2	3748.2	3748.2
14	LB/HR	36212	6869	6869	9218	29343	7630	55158	67542	67542	67542
15	PHYSICAL PROPERTIES										
16	MOLE WT	18.02	18.02	18.02	18.02	18.02	18.02	18.02	18.02	18.02	18.02
17	STATE (S, L, G)	G	G	G	G	G	G, L	L	L	L	L
18	ENTHALPY, BASE 77°F										
19	MMB/HR, TOTAL HEAT	43.43	8.24	11.24	11.77	35.19	2.76	17.06	19.84	14.78	15.17
20	BTU/LB, TOTAL SPECIFIC HEAT	1199.3	1199.3	1636.8	1276.9	1199.3	362.1	309.3	293.8	218.8	224.6
21	MMB/HR, SENSIBLE HEAT										
22	COMPOSITION (M/HR) (GAS OR LIQUID)										
23	CO										
24	CO_2										
25	H_2										
26	H_2O	36212	6869	6869	9218	29343	7630	55158	67542	67542	67542
27	NO										
28	N_2										
29	O										
30	OH										
31	O_2										
32	SO										
33	SO_2										
34	OTHERS (K, KO, KOH, S, H, ETC.)										
35	TOTAL	36212	6869	6869	9218	29343	7630	55158	67542	67542	67542
36	SOLIDS (LB/HR)										
37	K_2CO_3										
38	K_2SO_4										
39	ASH/SLAG										
40	TOTAL										

Table 3-4 Cont.

1	STREAM NUMBER	47	48	49	50	51	52	53	54	55	56
2	STREAM DESCRIPTION	Seal	Seal	Feedwater	Feedwater	Water From	Water From	Stm.-Water	CFFF	CFFF	Water From
3		Water To	Water	To	From	Steam	Recirc.	Mix. From	Water To	Water To	CDS
4		Recirc.	From	Economizer	Economizer	Drum To	Pump To	Boiler	CDS	CDS	Nozzle
5		Pump	Recirc.	After	To Steam	Recirc.	Boiler	Enclosure	Nozzle	Barrel	
6			Pump	Throttle	Drum	Pump	Enclosure	Walls To			
7							Walls	Steam Drum			
8	PROCESS CONDITIONS										
9	TEMPERATURE (^{o}F)	250	255	250	356	681	681	685			
10	PRESSURE (IN. WG.)										
11	PRESSURE (PSIG)	2850	98	2812	2800	2800	2820	2800			
12	FLOW RATE (STREAM TOTAL)										
13	LB MOLE/HR	793.0	687.2	2766.4	2766.4	68415.4	68521.1	68521.1	Conditions given in Appendix B		
14	LB/HR	14290	12384	49850	49850	1232844	1234750	1234750			
15	PHYSICAL PROPERTIES										
16	MOLE WT	18.02	18.02	18.02	18.02	18.02	18.02	18.02			
17	STATE (S, L, G)	L	L	L	L	L	L	G, L			
18	ENTHALPY, BASE 77°F										
19	MMB/HR, TOTAL HEAT	3.21	2.78	11.20	16.53	930.80	931.00	968.78			
20	BTU/LB, TOTAL SPECIFIC HEAT	224.6	224.6	224.6	331.7	755.0	754.0	784.6			
21	MMB/HR, SENSIBLE HEAT										
22	COMPOSITION (M/HR) (GAS OR LIQUID)										
23	CO										
24	CO_2										
25	H_2										
26	H_2O	14290	12384	49850	49850	1232844	1234750	1234750			
27	NO										
28	N_2										
29	O										
30	OH										
31	O_2										
32	SO										
33	SO_2										
34	OTHERS (K, KO, KOH, S, H, ETC.)										
35	TOTAL	14290	12384	49850	49850	1232844	1234750	1234750			
36	SOLIDS (LB/HR)										
37	K_2CO_3										
38	K_2SO_4										
39	ASH/SLAG										
40	TOTAL										

NOTES: 1 ATMOSPHERIC PRESSURE = 14.696

PROCESS MHD
CUSTOMER DEPARTMENT OF ENERGY
PLANT 20 MWt HRSR UNIT

CONTRACT NO. 891-1038
PROPOSAL NO.
DATE

OPERATING CONDITIONS
100% Load
Page 6 of 8

Babcock & Wilcox
HEAT AND MATERIAL BALANCE

BWFP 518

52

Table 3-4 Cont.

BWFP 616

Babcock & Wilcox

HEAT AND MATERIAL BALANCE

PROCESS MHD
CUSTOMER DEPARTMENT OF ENERGY
PLANT 20 MWt HRSR UNIT

CONTRACT NO. 891-1038
PROPOSAL NO.
DATE

OPERATING CONDITIONS 100% Load

	STREAM NUMBER	57	58	59	60	61	62	63	64a,b,c,d	65	66
2	STREAM DESCRIPTION	Water	Water	Attemp.	Attemp.	Feedwater	Blowdown	Make-up	Suction	Ash and	Phosphate
3		From	From	Spray To	Spray To	Pump	After	Water	Air for	Seed to	Injection
4		CDS	Feedwater	Secondary	ITAH	Recycle	Throttle		Ash and	Storage	to Steam
5		Barrel	Pump To	Superheater	Steam	Water			Seed		Drum
6			Attemp.	Steam					Removal		
7											
8	PROCESS CONDITIONS										
9	TEMPERATURE (^{o}F)	Given in	250	250	250	255	212	80			
10	PRESSURE (IN. WG.)	Appendix B									
11	PRESSURE (PSIG)		2890	2890	2890	98	0	150			
12	FLOW RATE (STREAM TOTAL)										
13	LB MOLE/HR		188.8	58.4	130.4						
14	LB/HR		3402	1053	2349	0	600LB/Min. for 5 Min. once every 8 Hours	0			ADDED
15	PHYSICAL PROPERTIES								870CFM For Approx.30 Min. Every 8 Hrs.	7552 Lb.of Solids Evry 8 Hrs. plus Stream 64	
16	MOLE WT		18.02	18.02	18.02	18.02		18.02			
17	STATE (S, L, G)		L	L	L	L	G, L	L			
18	ENTHALPY, BASE 77°F										
19	MMB/HR, TOTAL HEAT		0.76	0.24	0.53						
20	BTU/LB, TOTAL SPECIFIC HEAT		224.6	224.6	224.6	224.6	755.0	48.5			
21	MMB/HR, SENSIBLE HEAT										
22	COMPOSITION (M/HR) (GAS OR LIQUID)										
23	CO										
24	CO_2										
25	H_2										
26	H_2O		3402	1053	2349	0		0			
27	NO										
28	N_2										
29	O										
30	OH										
31	O_2										
32	SO										
33	SO_2										
34	OTHERS (K, KO, KOH, S, H, ETC.)										Phosphate
35	TOTAL		3402	1053	2349	0		0			
36	SOLIDS (LB/HR)										
37	K_2CO_3										
38	K_2SO_4										
39	ASH/SLAG										
40	TOTAL										

NOTES: 1 ATMOSPHERIC PRESSURE = 14.696

Table 3-4 Cont.

1	STREAM NUMBER	67	68								
2	STREAM DESCRIPTION	Hydrazine	Ammonia								
3		Injection	Injection								
4		to	to								
5		Subcooled	Subcooled								
6		Water	Water								
7											
8	PROCESS CONDITIONS										
9	TEMPERATURE (^{o}F)										
10	PRESSURE (IN. WG.)										
11	PRESSURE (PSIG)										
12	FLOW RATE (STREAM TOTAL)										
13	LB MOLE/HR										
14	LB/HR	AS REQUIRED									
15	PHYSICAL PROPERTIES										
16	MOLE WT										
17	STATE (S, L, G)										
18	ENTHALPY, BASE 77°F										
19	MMB/HR, TOTAL HEAT										
20	BTU/LB, TOTAL SPECIFIC HEAT										
21	MMB/HR, SENSIBLE HEAT										
22	COMPOSITION (M/HR) (GAS OR LIQUID)										
23	CO										
24	CO_2										
25	H_2										
26	H_2O										
27	NO										
28	N_2										
29	O										
30	OH										
31	O_2										
32	SO										
33	SO_2										
34	OTHERS (K, KO, KOH, S, H, ETC.)	Hydrazine	Ammonia								
35	TOTAL										
36	SOLIDS (LB/HR)										
37	K_2CO_3										
38	K_2SO_4										
39	ASH/SLAG										
40	TOTAL										

NOTES: 1 ATMOSPHERIC PRESSURE = 14.696

PROCESS MHD

CUSTOMER DEPARTMENT OF ENERGY

PLANT 20 MWt HRSR UNIT

CONTRACT NO. 891-1038

PROPOSAL NO.

DATE

OPERATING CONDITIONS 100% Load

Page 8 of 8

HEAT AND MATERIAL BALANCE

Babcock & Wilcox

BWFP 516

Table 3-4 Cont.

BWFP 518

Babcock & Wilcox

HEAT AND MATERIAL BALANCE

PROCESS MHD
CUSTOMER DEPARTMENT OF ENERGY
PLANT 20 MWt HRSR UNIT
NOTES: 1 ATMOSPHERIC PRESSURE = 14.696

CONTRACT NO. 891-1038
PROPOSAL NO.
DATE

OPERATING CONDITIONS 85% Load

	STREAM NUMBER	1	2	3	4	5	6	7	8	9a, b	10a, b
	STREAM DESCRIPTION	Combustion gas to channel and diffuser simulator	Combustion gas to furnace	Combustion gas to secondary superheater	Combustion gas to intermediate temperature air heater	Combustion gas to primary superheater	Combustion gas from primary superheater	Combustion gas to economizer	Combustion gas from economizer	Combustion gas to tubular and/or re-generative air heater	Combustion gas from tubular and/or re-generative air heater
	PROCESS CONDITIONS										
	TEMPERATURE (^{o}F)	4172	3730	2480	1510	965	798	798	321		
	PRESSURE (IN. WG.)	5.1 ATM	-0.1 IN WG	-0.5 IN WG	-0.6 IN WG	-0.9 IN WG	-1.1 IN WG	-2.5 IN WG	-6.8 IN WG		
	PRESSURE (PSIG)	60.3	-0.004	-0.02	-0.02	-0.03	-0.04	-0.09	-0.25		
	FLOW RATE (STREAM TOTAL)										
	LB MOLE/HR	942.5	937.8	1102.2	1096.5	1096.6	1096.6	1096.6	1096.6	REFER TO FULL LOAD	
	LB/HR	28358	28358	34049	33419	33352	33344	33344	33342	BALANCE SHEETS	
	PHYSICAL PROPERTIES									FOR AIR HEATER CONDS.	
	MOLE WT	30.00	30.15	30.87	30.36	30.35	30.35	30.35	30.35		
	STATE (S, L, G)	G, L	G, L	G, S	G, S	G, S	G, S	G, S	G, S		
	ENTHALPY, BASE 77°F										
	MMB/HR, TOTAL HEAT	-14.45	-20.29	-37.63	-47.42	-52.74	-54.31	-54.31	-58.62		
	BTU/LB, TOTAL SPECIFIC HEAT	-509.4	-715.5	-1105.3	-1419.0	-1581.3	-1628.8	-1628.8	-1758.0		
	MMB/HR, SENSIBLE HEAT										
	COMPOSITION (M/HR) (GAS OR LIQUID)										
	CO	1725	1485	2							
	CO_2	8625	9001	11332	11334	11332	11332	11332	11332		
	H_2	14	14								
	H_2O	2563	2603	2841	2879	2879	2879	2879	2879		
	NO	103	47	16	1						
	N_2	14058	14084	18477	18484	18484	18484	18484	18484		
	O	10	4								
	OH	94	53	2							
	O_2	166	82	415	392	392	392	392	392		
	SO	10	7								
	SO_2	263	267	127							
	OTHERS (K, KO, KOH, S, H, ETC.)	727	711	813	199	194	194	194	194		
	TOTAL	28358	28358	34025	33289	33281	33281	33281	33281		
	SOLIDS (LB/HR)										
	K_2CO_3				1	3	3	3	3		
	K_2SO_4				113	56	48	48	46		
	ASH/SLAG			24	16	12	12	12	12		
	TOTAL			24	130	71	63	63	61		

Table 3-5 Heat and Material Balance - 85% Load Conditions of Individual Process Streams

BWFP 518

Babcock & Wilcox

HEAT AND MATERIAL BALANCE

PROCESS MHD
CUSTOMER DEPARTMENT OF ENERGY
PLANT 20 MWt HRSR UNIT

CONTRACT NO. 891-1038
PROPOSAL NO.
DATE

OPERATING CONDITIONS
85% Load

NOTES: 1 ATMOSPHERIC PRESSURE = 14.696

	STREAM NUMBER	11	12	13	14	15	16	17	18	19	20
2	STREAM DESCRIPTION	Combustion Gas to Electro-static Precipitator	Combustion Gas to ID Fan and Stack	Slag and Seed Dropout In Furnace	Ash and Seed Dropout In Secondary Superheater	Ash and Seed Dropout In ITAH 1st Pass	Ash and Seed Dropout In ITAH 2nd Pass	Ash and Seed Dropout In Primary Superheater	Ash and Seed Dropout In Economizer	Ash and Seed Dropout In Tubular Air Heater	Ash and Seed Dropout In Regenera-tive Air Heater
8	PROCESS CONDITIONS										
9	TEMPERATURE (°F)	321	311	2590	1510	1349	965	920	560		
10	PRESSURE (IN. WG.)	-8.4 IN WG	-10.0 IN WG	-0.1 IN WG	-0.6 IN WG	-0.7 IN WG	-0.9 IN WG	-1.0 IN WG	-4.6 IN WG		
11	PRESSURE (PSIG)	-0.30	-0.36	-0.004	-0.02	-0.03	-0.03	-0.04	-0.17		
12	FLOW RATE (STREAM TOTAL)										
13	LB MOLE/HR	1096.6	1096.6							REFER TO FULL LOAD	
14	LB/HR	33342	33282	80	630	44	23	8	2	BALANCE SHEETS	
15	PHYSICAL PROPERTIES									FOR AIR HEATER CONDS.	
16	MOLE WT	30.35	30.35								
17	STATE (S, L, G)	G, S	G, S	L	S	S	S	S	S		
18	ENTHALPY, BASE 77°F										
19	MMB/HR, TOTAL HEAT	-58.62	-58.57	-0.002	-1.96	-0.13	-0.07	-0.03	-0.007		
20	BTU/LB, TOTAL SPECIFIC HEAT	-1758.0	-1759.8	-30.9	-3113.1	-3056.7	-3021.2	-3359.2	-3346.1		
21	MMB/HR, SENSIBLE HEAT			0.07	0.33	0.02	0.005	0.002	0.0002		
22	COMPOSITION (M/HR) (GAS OR LIQUID)										
23	CO										
24	CO_2	11332	11332								
25	H_2										
26	H_2O	2879	2879								
27	NO										
28	N_2	18484	18484								
29	O										
30	OH										
31	O_2	392	392								
32	SO										
33	SO_2										
34	OTHERS (K, KO, KOH, S, H, ETC.)	194	194								
35	TOTAL	33281	33281								
36	SOLIDS (LB/HR)										
37	K_2CO_3	3		0	5	2	1	0	0		
38	K_2SO_4	46		20	617	40	20	8	2		
39	ASH/SLAG	12	1	60	8	2	2	0	0		
40	TOTAL	61	1	80	630	44	23	8	2		

Table 3-5 Cont.

	1	2	3	4	5	6	7	8	9	10	11	12	13	14	15	16	17	18	19	20	21	22	23	24	25	26	27	28	29	30	31	32	33	34	35	36	37	38	39	40
	STREAM NUMBER	STREAM DESCRIPTION						PROCESS CONDITIONS	TEMPERATURE (^{o}F)	PRESSURE (IN. WG.)	PRESSURE (PSIG)	FLOW RATE (STREAM TOTAL)	LB MOLE/HR	LB/HR	PHYSICAL PROPERTIES	MOLE WT	STATE (S, L, G)	ENTHALPY, BASE 77°F	MMB/HR, TOTAL HEAT	BTU/LB, TOTAL SPECIFIC HEAT	MMB/HR, SENSIBLE HEAT	COMPOSITION (M/HR) (GAS OR LIQUID)	CO	CO_2	H_2	H_2O	NO	N_2	O	OH	O_2	SO	SO_2	OTHERS (K, KO, KOH, S, H, ETC.)	TOTAL	SOLIDS (LB/HR)	K_2CO_3	K_2SO_4	ASH/SLAG	TOTAL
	21	Ash & Seed Dropout In Electro-static Precipitator							316	-9.0 IN WG	-0.32			60			S		-0.17	-2850.7	0.003																		3	46	11	60
	22	Ambient Air for Secondary Combustion							59	1 ATM	0.00			5771		28.6	G		-0.46	-81.1								74		4378		1319				5771					
	23	Secondary Combustion Air to Preheater							59	11.5 IN WG	0.42			5771		28.6	G		-0.50	-86.0								74		4378		1319				5771					
	24	Secondary Combustion Air to Furnace							150	11.0 IN WG	0.40			5771		28.6	G		-0.32	-56.3								74		4378		1319				5771					
	25	Ambient Air for Tubular and/or Re-generative Air Heaters											REFER TO	FOR																										
	26	Air to Pre-heater(s) for Tubular and/or Re-generative Air Heater											FULL LOAD	AIR																										
	27a, b	Preheated Air to Tubular and/or Re-generative Air Heater											BALANCE	HEATER																										
	28a, b	Air Exhaust From Tubular and/or Re-generative Air Heater To Atmos.											SHEETS	CONDITIONS																										
	29	Steam From Steam Drum							685		2795		2386.6	43006		18.02	G		45.33	1054								43006								43006					
	30	Steam to Primary Superheater							685		2790		342.2	6167		18.02	G		6.50	1054								6167								6167					

NOTES: 1 ATMOSPHERIC PRESSURE = 14.696

PROCESS MHD
CUSTOMER DEPARTMENT OF ENERGY
PLANT 20 MWt HRSR UNIT

CONTRACT NO. 891-1038
PROPOSAL NO.
DATE

OPERATING CONDITIONS 85% Load

Page 3 of 7

Babcock & Wilcox
HEAT AND MATERIAL BALANCE

Table 3-5 Cont.

1	STREAM NUMBER	31	32	33	34	35	36	37	38	39	40
2	STREAM DESCRIPTION	Steam	Steam to	Bypass	Steam from	Steam from	Steam to	Steam	Flash Tank	Steam from	Steam from
3		from	Secondary	Steam from	Secondary	SSH to	Flash	from	Steam to	ITAH	ITAH to
4		Primary	Superheater	PSH to	Superheater	Condenser	Tank	Flash	ITAH	Before	Condenser
5		Superheater	After	Condenser	Before	After	After	Tank	After	Attemp.	After
6			Throttle	After	Attemp.	Attemp.	Throttle		Throttle		Attemp.
7				Throttle							
8	PROCESS CONDITIONS										
9	TEMPERATURE (^{o}F)	746	608	384	1000	750	388	388	362	1200	500
10	PRESSURE (IN. WG.)										
11	PRESSURE (PSIG)	2770	1325	110	1310	1300	200	200	122	120	110
12	FLOW RATE (STREAM TOTAL)										
13	LB MOLE/HR	342.2	333.5	8.7	333.5	380.1	2044.3	1688.3	240.5	240.5	322.8
14	LB/HR	6167	6010	157	6010	6850	36839	30423	4334	4334	5816
15	PHYSICAL PROPERTIES										
16	MOLE WT	18.02	18.02	18.02	18.02	18.02	18.02	18.02	18.02	18.02	18.02
17	STATE (S, L, G)	G	G	G	G	G	G	G	G	G	G
18	ENTHALPY, BASE 77°F										
19	MMB/HR, TOTAL HEAT	7.49	7.30	.19	8.99	9.18	38.83	36.48	5.20	7.09	9.52
20	BTU/LB, TOTAL SPECIFIC HEAT	1214	1214	1214	1496	1340	1054	1199	1199	1637	1637
21	MMB/HR, SENSIBLE HEAT										
22	COMPOSITION (M/HR) (GAS OR LIQUID)										
23	CO										
24	CO_2										
25	H_2										
26	H_2O	6167	6010	157	6010	6850	36839	30423	4334	4334	5816
27	NO										
28	N_2										
29	O										
30	OH										
31	O_2										
32	SO										
33	SO_2										
34	OTHERS (K, KO, KOH, S, H, ETC.)										
35	TOTAL	6167	6010	157	6010	6850	36839	30423	4334	4334	5816
36	SOLIDS (LB/HR)										
37	K_2CO_3										
38	K_2SO_4										
39	ASH/SLAG										
40	TOTAL										

NOTES: 1 ATMOSPHERIC PRESSURE = 14.696

PROCESS MHD
CUSTOMER DEPARTMENT OF ENERGY
PLANT 20 MWt HRSR UNIT

CONTRACT NO. 891-1038
PROPOSAL NO.
DATE

OPERATING CONDITIONS 85% Load

Babcock & Wilcox
HEAT AND MATERIAL BALANCE

BWFP 516

Page 4 of 7

Table 3-5 Cont.

1	STREAM NUMBER	41	42	43	44	45	46	47	48	49	50
2	STREAM DESCRIPTION	Flash Tank	Flash Tank	Condensate	Water	Water	Water	Seal	Seal	Feedwater	Feedwater
3		Steam to	Condensate	from	from Surge	from	from	Water to	Water	to	from
4		Condenser	to Condenser	Condenser	Tank to	Subcooler	Feedwater	Recirc.	from	Economizer	Economizer
5		After	After	to Surge	Subcooler	to	Pump	Pump	Recirc.	After	to Steam
6		Throttle	Throttle	Tank		Feedwater			Pump	Throttle	Drum
7						Pump					
8	PROCESS CONDITIONS										
9	TEMPERATURE (^{o}F)	358	361	338	321	250	250	250	256	250	353
10	PRESSURE (IN. WG.)										
11	PRESSURE (PSIG)	110	140	100	98	95	2890	2850	98	2812	2800
12	FLOW RATE (STREAM TOTAL)										
13	LB MOLE/HR	1447.8	356.0	2515.4	3202.7	3202.7	3202.7	793.0	687.2	2280.8	2280.8
14	LB/HR	26089	6416	45328	57712	57712	57712	14290	12384	41100	41100
15	PHYSICAL PROPERTIES										
16	MOLE WT	18.02	18.02	18.02	18.02	18.02	18.02	18.02	18.02	18.02	18.02
17	STATE (S, L, G)	G	G, L	L	L	L	L	L	L	L	L
18	ENTHALPY, BASE 77°F										
19	MMB/HR, TOTAL HEAT	31.28	2.32	14.02	16.80	12.63	12.96	3.21	2.78	9.23	13.54
20	BTU/LB, TOTAL SPECIFIC HEAT	1199	362.1	309.3	291.1	218.8	224.6	224.6	224.6	224.6	329.5
21	MMB/HR, SENSIBLE HEAT										
22	COMPOSITION (M/HR) (GAS OR LIQUID)										
23	CO										
24	CO_2										
25	H_2										
26	H_2O	26089	6416	45328	57712	57712	57712	14290	12384	41100	41100
27	NO										
28	N_2										
29	O										
30	OH										
31	O_2										
32	SO										
33	SO_2										
34	OTHERS (K, KO, KOH, S, H, ETC.)										
35	TOTAL	26089	6416	45328	57712	57712	57712	14290	12384	41100	41100
36	SOLIDS (LB/HR)										
37	K_2CO_3										
38	K_2SO_4										
39	ASH/SLAG										
40	TOTAL										

NOTES: 1 ATMOSPHERIC PRESSURE = 14.696

PROCESS MHD
CUSTOMER DEPARTMENT OF ENERGY
PLANT 20 MWt HRSR UNIT

CONTRACT NO. 891-1038
PROPOSAL NO.
DATE

OPERATING CONDITIONS 85% Load

Babcock & Wilcox
HEAT AND MATERIAL BALANCE

BWFP 516

Page 5 of 7

Table 3-5 Cont.

1	STREAM NUMBER	51	52	53	54	55	56	57	58	59	60
2	STREAM DESCRIPTION	Water from	Water from	Stm.-Water	CFFF	CFFF	Water from	Water	Water	Attemp.	Attemp.
3		Steam	Recirc.	Mix. from	Water to	Water to	CDS	from	from	Spray to	Spray to
4		Drum to	Pump to	Boiler	CDS	CDS	Nozzle	CDS	Feedwater	Secondary	ITAH
5		Recirc.	Boiler	Enclosure	Nozzle	Barrel		Barrel	Pump to	Superheater	Steam
6		Pump	Enclosure	Walls to					Attemp.	Steam	
7			Walls	Steam Drum							
8	PROCESS CONDITIONS										
9	TEMPERATURE (^{o}F)	681	681	686	----------	----NOT AVAILABLE----		----------	250	250	250
10	PRESSURE (IN. WG.)										
11	PRESSURE (PSIG)	2800	2820	2800					2890	2890	2890
12	FLOW RATE (STREAM TOTAL)										
13	LB MOLE/HR	68415.3	68521.1	68521.1					128.9	46.6	82.2
14	LB/HR	1232844	1234750	1234750					2322	840	1482
15	PHYSICAL PROPERTIES										
16	MOLE WT	18.02	18.02	18.02					18.02	18.02	18.02
17	STATE (S, L, G)	L	L	L					L	L	L
18	ENTHALPY, BASE 77°F										
19	MMB/HR, TOTAL HEAT	934.50	934.95	966.31					0.52	0.19	0.33
20	BTU/LB, TOTAL SPECIFIC HEAT	758.0	757.2	782.6					224.6	224.6	224.6
21	MMB/HR, SENSIBLE HEAT										
22	COMPOSITION (M/HR) (GAS OR LIQUID)										
23	CO										
24	CO_2										
25	H_2										
26	H_2O	1232844	1234750	1234750					2322	840	1482
27	NO										
28	N_2										
29	O										
30	OH										
31	O_2										
32	SO										
33	SO_2										
34	OTHERS (K, KO, KOH, S, H, ETC.)										
35	TOTAL	1232844	1234750	1234750					2322	840	1482
36	SOLIDS (LB/HR)										
37	K_2CO_3										
38	K_2SO_4										
39	ASH/SLAG										
40	TOTAL										

NOTES: 1 ATMOSPHERIC PRESSURE = 14.696

PROCESS MHD
CUSTOMER DEPARTMENT OF ENERGY
PLANT 20 MWt HRSR UNIT

CONTRACT NO. 891-1038
PROPOSAL NO.
DATE

OPERATING CONDITIONS 85% Load

Page 6 of 7

HEAT AND MATERIAL BALANCE

Babcock & Wilcox

BWFP 516

60

Table 3-5 Cont.

1	STREAM NUMBER	61	62	63	64a,b,c,d	65	66	67	68		
2	STREAM DESCRIPTION	Feedwater	Blowdown	Make-up	Suction	Ash and	Phosphate	Hydrazine	Ammonia		
3		Pump	After	Water	Air for	Seed to	Injection	Injection	Injection		
4		Recycle	Throttle		Ash and	Storage	to Steam	to	to		
5		Water			Seed		Drum	Subcooled	Subcooled		
6					Removal			Water	Water		
7											
8	PROCESS CONDITIONS										
9	TEMPERATURE (^{o}F)	256	212	80							
10	PRESSURE (IN. WG.)										
11	PRESSURE (PSIG)	98	0	150							
12	FLOW RATE (STREAM TOTAL)										
13	LB MOLE/HR										
14	LB/HR	0	600 LB/MIN for 5 Min. once every 8 hrs.	0	870 CFM for approx. 30 min. evry 8 hours	6136 LB of Solids every 8 hrs. plus Stream 64	ADDED	AS	REQUIRED		
15	PHYSICAL PROPERTIES										
16	MOLE WT	18.02	18.02	18.02							
17	STATE (S, L, G)	L	G, L	L							
18	ENTHALPY, BASE 77°F										
19	MMB/HR, TOTAL HEAT										
20	BTU/LB, TOTAL SPECIFIC HEAT	224.6	758.0	48.48							
21	MMB/HR, SENSIBLE HEAT										
22	COMPOSITION (M/HR) (GAS OR LIQUID)										
23	CO										
24	CO_2										
25	H_2										
26	H_2O	0		0							
27	NO										
28	N_2										
29	O										
30	OH										
31	O_2										
32	SO										
33	SO_2										
34	OTHERS (K, KO, KOH, S, H, ETC.)						Phosphate	Hydrazine	Ammonia		
35	TOTAL	0		0							
36	SOLIDS (LB/HR)										
37	K_2CO_3										
38	K_2SO_4										
39	ASH/SLAG										
40	TOTAL										

61

BWFP 518

Babcock & Wilcox

HEAT AND MATERIAL BALANCE

PROCESS MHD
CUSTOMER DEPARTMENT OF ENERGY
PLANT 20 MWt HRSR UNIT

CONTRACT NO. 891-1038
PROPOSAL NO.
DATE

OPERATING CONDITIONS 85% Load

NOTES: 1 ATMOSPHERIC PRESSURE = 14.696

Table 3-5 Cont.

BWFP 516

Babcock & Wilcox

HEAT AND MATERIAL BALANCE

PROCESS MHD
CUSTOMER DEPARTMENT OF ENERGY
PLANT 20 MWt HRSR UNIT
NOTES: 1 ATMOSPHERIC PRESSURE = 14.696

CONTRACT NO. 891-1038
PROPOSAL NO.
DATE

OPERATING CONDITIONS
70% Load
Page 1 of 7

	STREAM NUMBER	1	2	3	4	5	6	7	8	9a,b	10a,b
2	STREAM DESCRIPTION	Combustion	Combustion	Combustion	Combustion	Combustion	Combustion	Combustion	Combustion	Combustion	Combustion
3		Gas to	Gas to	Gas to	Gas to	Gas to	Gas from	Gas to	Gas from	Gas to	Gas to
4		Channel &	Furnace	Secondary	Intermediate	Primary	Primary	Economizer	Economizer	Tubular	Regenera-
5		Diffuser		Superheater	Temperature	Superheater	Superheater			Air Heater	tive Air
6		Simulator			Air Heater						Heater
7											
8	PROCESS CONDITIONS										
9	TEMPERATURE (^{o}F)	4092	3635	2310	1350	920	775	775	314		
10	PRESSURE (IN. WG.)	4.2 ATM	-0.3 IN WG	-0.5 IN WG	-0.5 IN WG	-0.7 IN WG	-0.8 IN WG	-1.8 IN WG	-4.7 IN WG		
11	PRESSURE (PSIG)	47.0	-0.01	-0.02	-0.02	-0.03	-0.03	-0.07	-0.17	REFER TO	FULL
12	FLOW RATE (STREAM TOTAL)									LOAD	BALANCE
13	LB MOLE/HR	778.9	772.7	905.0	898.7	898.7	898.7	898.7	898.7	SHEETS	FOR
14	LB/HR	23340	23340	28024	27552	27485	27468	27468	27467	AIR HEATER	CONDITIONS
15	PHYSICAL PROPERTIES										
16	MOLE WT	29.97	30.21	30.94	30.50	30.50	30.50	30.50	30.50		
17	STATE (S, L, G)	G, L	G, L	G, L, S	G, S	G, S	G, S	G, S	G, S		
18	ENTHALPY, BASE 77°F										
19	MMB/HR, TOTAL HEAT	-12.94	-17.92	-33.05	-40.53	-43.94	-45.04	-45.04	-48.51		
20	BTU/LB, TOTAL SPECIFIC HEAT	-560.5	-767.8	-1179.3	-1471.0	-1598.7	-1639.7	-1639.7	-1766.1		
21	MMB/HR, SENSIBLE HEAT										
22	COMPOSITION (M/HR) (GAS OR LIQUID)										
23	CO	1380	1162								
24	CO_2	7167	7510	9334	9333	9333	9333	9333	9333		
25	H_2	12	11								
26	H_2O	2130	2154	2362	2374	2375	2375	2375	2375		
27	NO	72	26	9	1						
28	N_2	11582	11604	15217	15218	15218	15218	15218	15218		
29	O	7	2								
30	OH	68	32	1							
31	O_2	115	40	325	322	322	322	322	322		
32	SO	8	6								
33	SO_2	218	221	34							
34	OTHERS (K, KO, KOH, S, H, ETC.)	581	572	715	160	160	160	160	160		
35	TOTAL	23340	23340	27997	27408	27408	27408	27408	27408		
36	SOLIDS (LB/HR)										
37	K_2CO_3				5	2	2	2	2		
38	K_2SO_4				118	58	41	41	40		
39	ASH/SLAG			27	21	17	17	17	17		
40	TOTAL			27	144	77	60	60	59		

Table 3-6 Heat and Material Balance - 70% Load Conditions of Individual Process Streams

1	STREAM NUMBER	11	12	13	14	15	16	17	18	19	20
2	STREAM DESCRIPTION	Combustion	Combustion	Slag and	Ash and	Ash and	Ash and	Ash and	Ash and	Ash and	Ash and
3		Gas to	Gas to	Seed	Seed	Seec	Seed	Seed	Seed	Seed	Seed
4		Electro-	ID Fan	Dropout In	Dropout In	Dropout In	Dropout In	Dropout In	Dropout In	Dropout In	Dropout In
5		static	and Stack	Furnace	Secondary	ITAH	ITAH	Primary	Economizer	Tubular	Regenera-
6		Precipitator			Superheater	1st Pass	2nd Pass	Superheater		Air Heater	tive Air
7											Heater
8	PROCESS CONDITIONS										
9	TEMPERATURE (^{o}F)	314	304	2500	1350	1200	920	850	400		
10	PRESSURE (IN. WG.)	-5.8 IN WG	-6.9 IN WG	-0.3 IN WG	-0.5 IN WG	-0.6 IN WG	-0.7 IN WG	-0.8 IN WG	-3.2 IN WG		
11	PRESSURE (PSIG)	-0.21	-0.25	-0.01	-0.02	-0.02	-0.03	-0.03	-0.12	REFER	TO
12	FLOW RATE (STREAM TOTAL)									FULL	LOAD
13	LB MOLE/HR	898.7	898.7							BALANCE	SHEETS
14	LB/HR	27467	27409	68	472	44	23	17	1	FOR AIR	HEATER
15	PHYSICAL PROPERTIES									CONDITIONS	
16	MOLE WT	30.50	30.50								
17	STATE (S, L, G)	G, S	G, S	L	S	S	S	S	S		
18	ENTHALPY, BASE 77°F										
19	MMB/HR, TOTAL HEAT	-48.51	-48.43	-0.09	-1.52	-0.14	-0.07	-0.06	~ 0.0		
20	BTU/LB, TOTAL SPECIFIC HEAT	-1766.1	-1766.9	-1379.1	-3229.2	-3157.0	-3074.0	-3377.7	-3519.0		
21	MMB/HR, SENSIBLE HEAT			0.05	0.13	0.01	~ 0.0	~ 0.0	~ 0.0		
22	COMPOSITION (M/HR) (GAS OR LIQUID)										
23	CO										
24	CO_2	9333	9333								
25	H_2										
26	H_2O	2375	2375								
27	NO										
28	N_2	15218	15218								
29	O										
30	OH										
31	O_2	322	322								
32	SO										
33	SO_2										
34	OTHERS (K, KO, KOH, S, H, ETC.)	160	160								
35	TOTAL	27408	27408								
36	SOLIDS (LB/HR)										
37	K_2CO_3	2			1	2	1				
38	K_2SO_4	40		40	465	40	20	17	1		
39	ASH/SLAG	17	1	28	6	2	2				
40	TOTAL	59	1	68	472	44	23	17	1		

NOTES: 1 ATMOSPHERIC PRESSURE = 14.696

PROCESS MHD
CUSTOMER DEPARTMENT OF ENERGY
PLANT 20 MWt HRSR UNIT

CONTRACT NO. 891-1038
PROPOSAL NO.
DATE

OPERATING CONDITIONS
70% Load
Page 2 of 7

BWFP 516

Babcock & Wilcox
HEAT AND MATERIAL BALANCE

Table 3-6 Cont.

1	STREAM NUMBER	21	22	23	24	25	26	27a,b	28a,b	29	30
2	STREAM DESCRIPTION	Ash & Seed	Ambient	Secondary	Secondary	Ambient Air	Air to Pre-	Air Exhaust	Air Exhaust	Steam	Steam to
3		Dropout In	Air for	Combustion	Combustion	for Tubular	heater(s)	from Tubular	from Tubular	from	Primary
4		Electro-	Secondary	Air to	Air to	and/or Re-	for Tubular	and/or Re-	and/or Re-	Steam	Superheater
5		static	Combustion	Preheater	Furnace	generative	and/or Re-	generative	generative	Drum	
6		Precipitator				Air Heater	generative	Air Heater	Air Heater		
7							Air Heaters	to Atmos.	to Atmos.		
8	PROCESS CONDITIONS										
9	TEMPERATURE (^{o}F)	309	59	59	150					685	685
10	PRESSURE (IN. WG.)	-6.9 IN WG	1.0 ATM	+8.3 IN WG	+8.1 IN WG						
11	PRESSURE (PSIG)	-0.25	0.00	+0.30	+0.29	REFER	TO	FULL	LOAD	2797	2793
12	FLOW RATE (STREAM TOTAL)					BALANCE	SHEETS	FOR			
13	LB MOLE/HR		166.2	166.2	166.2	AIR	HEATER	CONDITIONS		1950.9	251.5
14	LB/HR	58	4752	4752	4752					35156	4532
15	PHYSICAL PROPERTIES										
16	MOLE WT		28.6	28.6	28.6					18.02	18.02
17	STATE (S, L, G)	S	G	G	G					G	G
18	ENTHALPY, BASE 77°F										
19	MMB/HR, TOTAL HEAT	-0.15	-0.38	-0.38	-0.27					37.04	4.78
20	BTU/LB, TOTAL SPECIFIC HEAT	-2477.9	-80.9	-80.9	-56.3					1053.6	1053.6
21	MMB/HR, SENSIBLE HEAT	~ 0.0									
22	COMPOSITION (M/HR) (GAS OR LIQUID)										
23	CO										
24	CO_2										
25	H_2										
26	H_2O		61	61	61					35156	4532
27	NO										
28	N_2		3605	3605	3605						
29	O										
30	OH										
31	O_2		1086	1086	1086						
32	SO										
33	SO_2										
34	OTHERS (K, KO, KOH, S, H, ETC.)										
35	TOTAL		4752	4752	4752					35156	4532
36	SOLIDS (LB/HR)										
37	K_2CO_3	2									
38	K_2SO_4	40									
39	ASH/SLAG	16									
40	TOTAL	58									

NOTES: 1 ATMOSPHERIC PRESSURE = 14.696

PROCESS MHD
CUSTOMER DEPARTMENT OF ENERGY
PLANT 20 MWt HRSR UNIT

CONTRACT NO. 891-1038
PROPOSAL NO.
DATE

OPERATING CONDITIONS 70% Load

Page 3 of 7

BWFP 518

Babcock & Wilcox

HEAT AND MATERIAL BALANCE

Table 3-6 Cont.

1	STREAM NUMBER	31	32	33	34	35	36	37	38	39	40
2	STREAM DESCRIPTION	Steam	Steam to	Bypass	Steam from	Steam from	Steam to	Steam	Flash Tank	Steam from	Steam from
3		from	Secondary	Steam from	Secondary	SSH to	Flash	from	Steam to	ITAH	ITAH to
4		Primary	Superheater	PSH to	Superheater	Condenser	Tank	Flash	ITAH	Before	Condenser
5		Superheater	After	Condenser	Before	After	After	Tank	After	Attemp.	After
6			Throttle	After	Attemp.	Attemp.	Throttle		Throttle		Attemp.
7				Throttle							
8	PROCESS CONDITIONS										
9	TEMPERATURE (^{O}F)	741	593		1000	750	388	388	360	1150	500
10	PRESSURE (IN. WG.)										
11	PRESSURE (PSIG)	2768	1327		1310	1300	200	200	118	115	105
12	FLOW RATE (STREAM TOTAL)										
13	LB MOLE/HR	251.5	251.5		251.5	286.6	1699.4	1403.7	142.6	142.6	187.7
14	LB/HR	4532	4532	0	4532	5165	30624	25294	2569	2569	3382
15	PHYSICAL PROPERTIES										
16	MOLE WT	18.02	18.02		18.02	18.02	18.02	18.02	18.02	18.02	18.02
17	STATE (S, L, G)	G	G		G	G	G, L	G	G	G	G
18	ENTHALPY, BASE 77°F										
19	MMB/HR, TOTAL HEAT	5.48	5.48		6.78	6.92	32.27	30.34	3.08	4.14	4.32
20	BTU/LB, TOTAL SPECIFIC HEAT	1209.0	1209.0		1495.8	1339.9	1053.6	1199.3	1199.3	1610.4	1277.4
21	MMB/HR, SENSIBLE HEAT										
22	COMPOSITION (M/HR) (GAS OR LIQUID)										
23	CO										
24	CO_2										
25	H_2										
26	H_2O	4532	4532		4532	5165	30624	25294	2569	2569	3382
27	NO										
28	N_2										
29	O										
30	OH										
31	O_2										
32	SO										
33	SO_2										
34	OTHERS (K, KO, KOH, S, H, ETC.)										
35	TOTAL	4532	4532	0	4532	5165	30624	25294	2569	2569	3382
36	SOLIDS (LB/HR)										
37	K_2CO_3										
38	K_2SO_4										
39	ASH/SLAG										
40	TOTAL										

NOTES: 1 ATMOSPHERIC PRESSURE = 14.696

PROCESS MHD
CUSTOMER DEPARTMENT OF ENERGY
PLANT 20 MWt HRSR UNIT

CONTRACT NO. 891-1038
PROPOSAL NO.
DATE

OPERATING CONDITIONS 70% Load

Page 4 of 7

BWFP 516

Babcock & Wilcox

HEAT AND MATERIAL BALANCE

Table 3-6 Cont.

	STREAM NUMBER	41	42	43	44	45	46	47	48	49	50
2	STREAM DESCRIPTION	Flash Tank Steam to Condenser After Throttle	Flash Tank Condensate to Condenser After Throttle	Condensate from Condenser to Surge Tank	Water from Surge Tank to Subcooler	Water from Subcooler to Feedwater Pump	Water from Feedwater Pump	Seal Water to Recirc. Pump	Seal Water from Recirc. Pump	Feedwater to Economizer After Throttle	Feedwater from Economizer to Steam Drum
8	PROCESS CONDITIONS										
9	TEMPERATURE (^{O}F)	356	358	338	317	250	250	250	255	250	353
10	PRESSURE (IN. WG.)										
11	PRESSURE (PSIG)	105	135	100	98	95	2880	2850	98	2810	2800
12	FLOW RATE (STREAM TOTAL)										
13	LB MOLE/HR	1261.1	295.8	2031.2	2718.4	2718.4	2718.4	793.0	687.2	1845.2	1845.2
14	LB/HR	22725	5330	36602	48986	48986	48986	14290	12384	33250	33250
15	PHYSICAL PROPERTIES										
16	MOLE WT	18.02	18.02	18.02	18.02	18.02	18.02	18.02	18.02	18.02	18.02
17	STATE (S, L, G)	G	G, L	L	L	L	L	L	L	L	L
18	ENTHALPY, BASE 77°F										
19	MMB/HR, TOTAL HEAT	27.25	1.93	11.32	14.10	10.72	11.00	3.21	2.78	7.47	10.94
20	BTU/LB, TOTAL SPECIFIC HEAT	1199.3	362.1	309.3	287.9	218.8	224.6	224.6	224.6	224.6	329.0
21	MMB/HR, SENSIBLE HEAT										
22	COMPOSITION (M/HR) (GAS OR LIQUID)										
23	CO										
24	CO_2										
25	H_2										
26	H_2O	22725	5330	36602	48986	48986	48986	14290	12384	33250	33250
27	NO										
28	N_2										
29	O										
30	OH										
31	O_2										
32	SO										
33	SO_2										
34	OTHERS (K, KO, KOH, S, H, ETC.)										
35	TOTAL	22725	5330	36602	48986	48986	48986	14290	12384	33250	33250
36	SOLIDS (LB/HR)										
37	K_2CO_3										
38	K_2SO_4										
39	ASH/SLAG										
40	TOTAL										

NOTES: 1 ATMOSPHERIC PRESSURE = 14.696

PLANT 20 Mkt HRSR UNIT
CUSTOMER DEPARTMENT OF ENERGY
PROCESS MHD

CONTRACT NO. 891-1038
PROPOSAL NO.
DATE

OPERATING CONDITIONS 70% Load
Page 5 of 7

Babcock & Wilcox
HEAT AND MATERIAL BALANCE
BWFP 616

Table 3-6 Cont.

BWFP 618

Babcock & Wilcox

HEAT AND MATERIAL BALANCE

PROCESS MHD
CUSTOMER DEPARTMENT OF ENERGY
PLANT 20 MWt HRSR UNIT

CONTRACT NO. 891-1038
PROPOSAL NO.
DATE

OPERATING CONDITIONS 70% Load

NOTES: [1] ATMOSPHERIC PRESSURE = 14.696

Page 6 of 7

	STREAM NUMBER	51	52	53	54	55	56	57	58	59	60
	STREAM DESCRIPTION	Water from Steam Drum to Recirc. Pump	Water from Recirc. Pump to Boiler Enclosure Walls	Stm.-Water Mix. from Boiler Enclosure Walls to Steam Drum	CFFF Water to CDS Nozzle	CFFF Water to CDS Barrel	Water from CDS Nozzle	Water from CDS Barrel	Water from Feedwater Pump to Attemp.	Attemp. Spray to Secondary Superheater Steam	Attemp. Spray to ITAH Steam
	PROCESS CONDITIONS										
	TEMPERATURE (^{O}F)	684	684	685	----------	-NOT AVAILABLE----------			250	250	250
	PRESSURE (IN. WG.)										
	PRESSURE (PSIG)	2800	2820	2800					2880	2880	2880
	FLOW RATE (STREAM TOTAL)										
	LB MOLE/HR	69415.3	68521.1	68521.1					80.2	35.1	45.1
	LB/HR	1232844	1234750	1234750					1446	633	813
	PHYSICAL PROPERTIES										
	MOLE WT	18.02	18.02	18.02					18.02	18.02	18.02
	STATE (S, L, G)	L	L	G, L					L	L	L
	ENTHALPY, BASE 77°F										
	MMB/HR, TOTAL HEAT	938.07	938.54	964.21					0.32	0.14	0.18
	BTU/LB, TOTAL SPECIFIC HEAT	760.9	760.1	780.9					224.6	224.6	224.6
	MMB/HR, SENSIBLE HEAT										
	COMPOSITION (M/HR) (GAS OR LIQUID)										
	CO										
	CO_2										
	H_2										
	H_2O	1232844	1234750	1234750					1446	633	813
	NO										
	N_2										
	O										
	OH										
	O_2										
	SO										
	SO_2										
	OTHERS (K, KO, KOH, S, H, ETC.)										
	TOTAL	1232844	1234750	1234750					1446	633	813
	SOLIDS (LB/HR)										
	K_2CO_3										
	K_2SO_4										
	ASH/SLAG										
	TOTAL										

Table 3-6 Cont.

1	STREAM NUMBER	61	62	63	64a,b,c,d	65	66	67	68		
2	STREAM DESCRIPTION	Feedwater	Blowdown	Make-up	Suction	Ash and	Phosphate	Hydrazine	Ammonia		
3		Pump	After	Water	Air for	Seed to	Injection	Injection	Injection		
4		Recycle	Throttle		Ash and	Storage	to Steam	to	to		
5		Water			Seed		Drum	Subcooled	Subcooled		
6					Removal			Water	Water		
7											
8	PROCESS CONDITIONS										
9	TEMPERATURE (^{o}F)	255	212	80							
10	PRESSURE (IN. WG.)										
11	PRESSURE (PSIG)	98	0	150							
12	FLOW RATE (STREAM TOTAL)										
13	LB MOLE/HR										
14	LB/HR	0	600 LB/MIN for 5 Min. once every 8 hours	0	870 CFM for appr. 30 min. every 8 hours	4920 LB of Solids every 8 hours plus Stream 64	ADDED	AS	REQUIRED		
15	PHYSICAL PROPERTIES										
16	MOLE WT	18.02	18.02	18.02							
17	STATE (S, L, G)	L	G. L	L							
18	ENTHALPY, BASE 77°F										
19	MMB/HR, TOTAL HEAT										
20	BTU/LB, TOTAL SPECIFIC HEAT	224.6	760.9	48.5							
21	MMB/HR, SENSIBLE HEAT										
22	COMPOSITION (M/HR) (GAS OR LIQUID)										
23	CO										
24	CO_2										
25	H_2										
26	H_2O	0		0							
27	NO										
28	N_2										
29	O										
30	OH										
31	O_2										
32	SO										
33	SO_2										
34	OTHERS (K, KO, KOH, S, H, ETC.)						Phosphate	Hydrazine	Ammonia		
35	TOTAL	0		0							
36	SOLIDS (LB/HR)										
37	K_2CO_3										
38	K_2SO_4										
39	ASH/SLAG										
40	TOTAL										

NOTES: 1 ATMOSPHERIC PRESSURE = 14.696

PROCESS MHD
CUSTOMER DEPARTMENT OF ENERGY
PLANT 20 MWt HRSR UNIT

CONTRACT NO. 891-1038
PROPOSAL NO.
DATE

OPERATING CONDITIONS 70% Load

Page 7 of 7

HEAT AND MATERIAL BALANCE

Babcock & Wilcox

BWFP 516

Table 3-6 Cont.

TABLE 3-7

B&W CALCULATED PART LOAD CONDITIONS
VS.
DOE PART LOAD COMBUSTOR ANALYSES

	85% Load		70% Load	
	B&W	DOE	B&W	DOE
Percent Slag Rejection	75	76.3	80	80.9
Total Flow Rate (Lb/hr)	28358	28350	23340	23337
Combustor Exit Temperature (^{o}F)	4172	4206	4092	4099
Combustor Exit Pressure (Atm)	5.1	5.1	4.2	4.2
Combustion Gas Composition				
Gas Constituent	Flow Rates (lb/hr)			
CO	1725	1819	1380	1413
CO_2	8625	8478	7167	7111
H_2	14	15	12	12
H_2O	2563	2575	2130	2134
NO	103	110	72	72
N_2	14058	14055	11582	11581
O	10	11	7	7
OH	94	105	68	71
O_2	166	177	115	113
SO	10	11	8	8
SO_2	263	264	218	218
Others:				
(K, KO, KOH, S, H, etc.)	727	730	581	597

4.0. Equipment Description and Functional Requirements

With an understanding of the basic design philosophy and the different operational cycles involved with this project, we now proceed with a more detailed analysis of the system. The purpose of this section is to describe the major pieces of equipment that comprise the 20 MWt HRSR system. For the arrangement of equipment, refer to the drawings in Appendix C.

Many factors influenced the design of the HRSR unit. The most important of these factors were process considerations, mechanical considerations and cost considerations. Process considerations refer to the ability of a particular design to provide the data base information on areas such as corrosion, slag/seed interactions, etc. Typical mechanical considerations are equipment reliability, operation and maintenance. Cost considerations are self-explanatory.

Several items are discussed in this section for each piece of equipment. The influence of the factors mentioned above are detailed when applicable. Functional explanations are provided, describing how the piece of equipment fits into the system as a whole. Important design decisions are discussed, such as the choice of a water cooled membrane wall furnace over a refractory furnace. Physical descriptions are included, complete with helpful illustrations (for future reference, the combustor end of the HRSR System is defined as the front, with the left and right side determined by looking back at the HRSR System from the front). Also, design conditions and expected full load operating conditions are presented for each piece of equipment.

Sections 4.1 - 4.8 deal with the gas side environment, from the

furnace to the precipitator. Section 4.8 describes the ash and seed handling equipment. Since the channel and diffuser simulator is mainly considered a gas conditioning unit and not an integral part of the HRSR system, information on its design is placed in Appendix B. Section 4.9. discusses the auxiliary equipment, such as fans, pumps, sootblowers, etc.

It should be noted that the 20 MWt HRSR system design conforms to the codes and standards specified in the previously submitted Codes and Standards Requirements Report, No. BW10018-TR-2. Wind loading will be based on a 80 mph wind velocity. The site (Tullahoma, Tennessee) is in seismic risk zone 1 for determining seismic loads.

4.1. Furnace

The flue gases pass from the channel and diffuser simulator into the bottom of the furnace at 3800F. The gases are cooled to 2800F just before secondary combustion. The secondary combustion system injects air to complete combustion, and the gases exit from the furnace to the secondary superheater at 2600F.

The furnace serves several purposes in an HRSR system and is particularly important as a test piece of equipment for this project. Functionally, a furnace must cool the flue gas to a temperature suitable for entrance to the secondary superheater. It must generate steam and provide for the removal of molten ash (slag) at high temperatures. Also, the furnace on this unit must provide openings for intrusive and non-intrusive instrumentation to access the gas side environment.

Section 4.1.1. discusses the reasons for choosing a water cooled type furnace. Following that, Section 4.1.2. explains the details of the furnace design.

4.1.1. Water Cooled vs. Refractory Furnace

The water cooled furnace with membrane tube wall construction was chosen as the furnace type for the 20 MWt HRSR system. This construction is the logical choice since it is prototypical of a commercial size MHD plant. However, a refractory furnace was initially considered because it offered increased flexibility to study the decay of nitrous oxides (NO_x) before secondary combustion. Mechanical risks existed with the refractory furnace that were serious enough in scope to place the entire test program for the HRSR in jeopardy. Thus, in order to assure acquisition of data in all areas of technological concern, the water cooled furnace was selected.

In the refractory furnace, heat transferred from the gas to the furnace walls is suppressed by a thick insulating refractory lining. This reduces the cooling rate of the gas and increases the time the gas must be in the refractory furnace as compared to a water cooled furnace to achieve the same amount of cooling. The gas residence time for a refractory furnace is 1.5 seconds compared to 0.7 second for a water cooled furnace. Longer residence time at elevated temperatures (above 2800F) strongly favors the decay of NO_x by gas-phase chemical reactions. Thus, the refractory furnace is more amenable for studying the chemical reactions (kinetics) governing the decomposition of NO_x.

This is not to say that valuable NO_x data will not be obtained from a membrane wall; quite the contrary is true. Studies indicate that the NO_x level before secondary combustion is strongly decoupled from the final NO_x levels after secondary combustion. The controlling factor on nitrous oxide levels would then be secondary combustion. If this is true, then the whole question of the refractory vs. the water cooled

furnace becomes academic. The effect of different secondary air mixing patterns on nitrous oxide levels is part of the test program. Also, sampling ports are provided throughout the furnace to measure nitrous oxide levels. This will provide a data base for verification of computer models and better understanding of the nitrous oxide kinetics.

To more clearly understand the tradeoff between NO_x data and furnace reliability, it is necessary to take a closer look at the refractory and water cooled furnace designs.

The refractory furnace that was first considered had a small water cooled primary furnace followed by a much larger refractory lined secondary furnace. The primary furnace was patterned after the furnace and screen arrangement utilized with commercial cyclone furnace boilers. The secondary furnace was constructed with flat walls and a horizontal roof. The secondary furnace had a 16-3/4" thick, two layer refractory lining. This thick refractory had a layer of dense high temperature brick on the hot face with insulating brick or castable behind it. In order to support the refractory lining, steel ledges would be required at several elevations. The steel support ledges are attached to the external steel structure to carry the weight of the refractory walls and limit the load on the bottom bricks to prevent crushing of these bricks at operating temperature. Behind the refractory is a double steel jacket with an annulus filled with water at atmospheric pressure. The water serves to control the temperature of the steel outer jacket and also provides cooling of the refractory.

Definitive engineering of this refractory furnace revealed that the state-of-art materials and wall construction would probably not survive the high temperatures and slagging conditions that exist in this

furnace. Hot flowing slag would etch away the refractory lining. The gas temperature entering the refractory furnace will be approximately 600F higher than that encountered in state-of-art furnaces. The temperature of the support ledges and the steel anchors which keep the vertical wall from buckling inward were higher than allowable for available steel alloys.

It became evident that an alternate material and construction method was required to make the refractory furnace work. Both a refractory vendor and B&W's Refractories Research Division recommended that the arrangement of the refractory furnace be changed from a rectangular furnace with flat walls and roof to three cylindrical furnaces with dome-shaped floor and roof sections. Circular refractory ducts would connect the three cylinders either at the roof section or near the bottom of the cylinder. This would eliminate all of the steel support structure that would be subjected to high temperatures. The cylindrical furnaces would resist buckling inward, which is a problem with flat walls. The key concerns with this design were questionable mechanical integrity of the interface between cylindrical furnace and the connecting ducts and refractory survival.

A survey to find a refractory material suitable for this refractory furnace revealed only two high temperature refractory materials that showed any promise. These materials were Corhart X-317 brick and Norton LS-812 castable. These refractories are either new experimental materials or semi-commercial materials available on special order and are quite costly. Experience with either of these materials is very limited, therefore, refractory survival could not be guaranteed.

Refractory deterioration, whether gradual or sudden, would have drastic consequences on furnace availability. A rebuild and/or maintenance of the refractory furnace would be relatively complex, costly and time consuming. The time required for a refractory rebuild potentially could place the entire test plan in danger.

Also, the refractory furnace is at a disadvantage from an operational standpoint. Slow start-up and shut-down rates (approximately 50F/hour) would be required to avoid refractory cracking due to thermal shock. The HRSR system, as a whole, would be more sensitive to gas temperature excursions. This is because heat absorption rates from the refractory furnace cannot be altered quickly. Access to certain areas, such as the interconnecting ducts, would be cumbersome in the refractory furnace.

Another disadvantage of the refractory furnace is that the corrosion, slag formation and heat transfer data obtained would be less representative of a commercial MHD plant. In order to obtain this data, some water cooled tubes were to be placed in the refractory furnace at certain points. Corrosion and slag formation are temperature sensitive, thus the phenomena that occur at one point in the furnace may not be indicative of the whole furnace. There are considerably different radiative exchange factors in the refractory furnace as compared to a water cooled furnace. For the tight geometry of the refractory furnace, reradiation from the refractory walls to water cooled tubes will indirectly affect corrosion and slag formation and directly affect heat transfer data. Thus scaling of heat transfer data would be further complicated.

The consensus at this point, both by B&W and DOE, was that the refractory furnace was undesirable and ran an unacceptable risk. The water cooled furnace, based on well established engineering design and construction techniques, was selected as the furnace type.

The water cooled furnace will assure acquisition of data in all critical areas identified in Section 1.0. This is essential to the development of a commercial MHD plant.

A description of the water cooled furnace is presented in the next section.

4.1.2. Furnace Design Description

This section presents the important features of the 20 MWt HRSR furnace design. The design is based on a 3800F inlet gas temperature, 2800F gas temperature just before the introduction of secondary air to minimize NO_x reformation and remain above the auto-ignition temperature, and a 2600F outlet temperature. These temperature levels match that of the 300 MWt plant described in the Scale-Up to Large Size System Report, Report No. BW10018-TR-3.

The water cooled furnace is constructed with membrane tube walls. The membrane tube walls are made of 1-1/8" O.D. by 0.203" minimum thickness tubes on 1-1/2" centers. Tube material is SA-210 Grade A1 carbon steel. Steel studs 3/8" diameter and 5/8" long are welded in a diagonal pattern to the water cooled tubes. A layer of refractory covers the studded membrane tube wall as shown in Figure 4-1. Because the steel studs promote cooling and the refractory layer is relatively thin, the outer surface temperature of the refractory

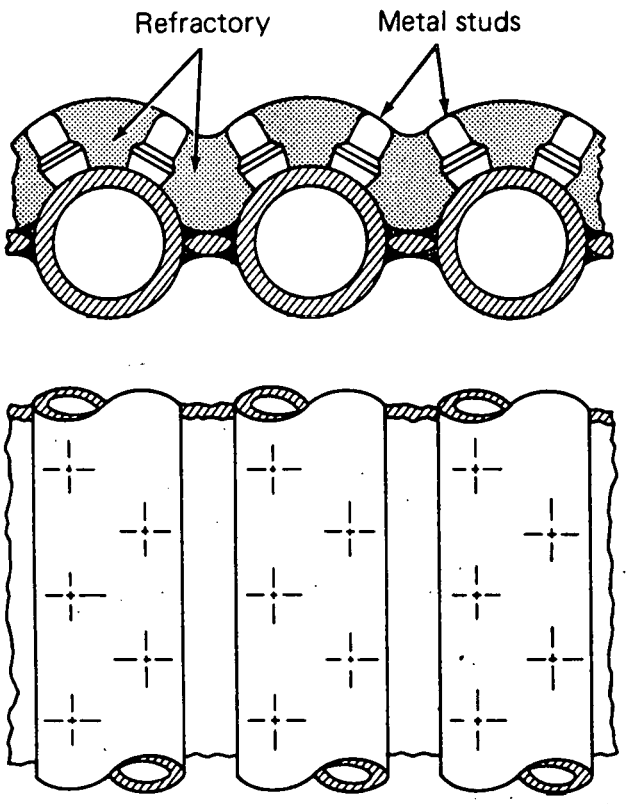

Figure 4-1 Studded and Refractory Covered Membrane Wall

will be below the slag condensation temperature (2600F). A layer of frozen slag forms between the refractory and the flowing slag. This offers protection to the refractory and tubes from the abrasive action of the high temperature flowing slag.

The refractory that covers the membrane tube wall must be corrosion resistant as well as being slag resistant. Corrosion is of special concern in a MHD furnace before secondary combustion due to the high temperature reducing atmosphere and the presence of potassium salts. High-alumina refractories used in conventional boilers are not likely to survive in a corrosive MHD environment. Preliminary tests indicate that alumina-chrome refractory will better resist corrosion in a MHD environment. Another refractory being considered is

a magnesium-aluminate refractory. Due to the lack of experience in this area, both the alumina-chrome and magnesium-aluminate refractories will be installed and tested in the furnace.

The alumina-chrome refractory is a ramming material while the magnesium-aluminate refractory is a castable. The magnesium-aluminate refractory will first be installed on the furnace front and rear walls and on part of the furnace floor. After the magnesium-aluminate refractory is allowed to dry and cure, the alumina-chrome refractory will be rammed on the remaining sections of the furnace. Following a firing procedure, the refractories will be resistant to thermal shock.

The diameter and spacing of the membrane wall tubes is influenced by the need to provide proper boiler circulation in order to prevent departure from nucleate boiling (DNB). DNB occurs when steam bubbles formed on the inside of the membrane wall tubes are no longer absorbed or liberated into the main saturated steam flow. The bubbles will coalesce to form a film of superheated steam between the tubes and the main flow. This condition greatly reduces heat transfer causing tube metal temperature to rise. The end result is often tube failure.

To avoid DNB, several correlations have been developed relating the onset of DNB to such boiler conditions as cooling water mass flow (flow per unit area), heat flux, operating pressure, steam quality, etc. Accumulated data on these limiting values and design criteria are derived from operating experience and laboratory investigation.

The initial design of the HRSR boiler specified 2-1/2" O.D. tubes on 3" centers, a typical wall arrangement for large size radiant

boilers. The minimum mass flow for circulation is typically 500,000 lb/hr-ft^2, derived from the DNB limits mentioned above. The first estimate of the number of tubes in the circulation system was just over 900 tubes, giving a corresponding total flow area of about 16.6 ft^2. Combining the mass flow with flow area gives a minimum total circulation flow of over 8,300,000 lb/hr. This flow rate is excessively high for this small size boiler and would result in unnecessarily high pumping costs.

To alleviate this problem, tube size and spacing were reduced to 1-1/8" O.D. on 1-1/2" centers. The boiler currently has 740 tubes in the circulation system resulting in a flow area of about 1.9 ft^2. By using an average mass flow of 650,000 lb/hr-ft^2 from DNB limits the total circulation flow is now down to approximately 1,230,000 lb/hr, a much more reasonable value.

The enclosure wall tubes in the radiant furnace are subjected to higher heat fluxes than the walls of the downstream components because of higher furnace gas temperatures; thus the furnace tubes are more likely to be closer to DNB limits for smooth tubes. Therefore, the entire furnace will have internally ribbed tubes similar to the one shown in Figure 4-2. Internally ribbed tubes have shown a remarkable

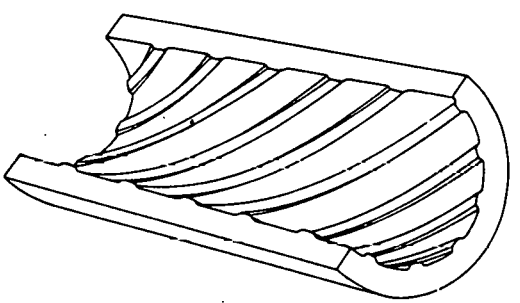

Figure 4-2 Multiple-Lead Ribbed Tube

ability to delay the breakdown of nucleate boiling.

From this detailed discussion of the tube walls we will now proceed to a broader physical description of the furnace. The inlet to the furnace from the channel/diffuser simulator is a 24" x 19" square opening at the bottom of the furnace. The height from the center of the furnace inlet to the secondary air injection is 10'-10". The furnace height from center of the inlet to the roof is approximately 18'. These heights were determined from the amount of surface required, which was in turn determined from the temperature levels listed in the front of this section and B&W methods for determining heat absorption.

B&W used an empirical heat transfer method called the cavity method in order to size the furnace. The cavity method is based on years of field experience with conventional boilers and implicitly takes into account the effects of particle radiation and slag condensation on the furnace walls. The effects of radiation by potassium salts is presently unknown and is one of the technical risks to be evaluated in the HRSR test project. The use of theoretical heat transfer models was deemed premature owing to the test nature of the HRSR test program. Theoretical modeling, which may include potassium radiation, must be tempered by the fact that slag-seed interactions, particle size distribution, wall emissivity and slag temperature distribution are largely unknown. These quantities need to be determined experimentally, therefore, it is more prudent and less risky to use an empirical heat transfer method.

This is not to say theoretical modeling is not without merit. Quite the contrary, theoretical developments provide the designer necessary information and insights to the processes that occur. However, before applying a theoretical model to a practical end, it is critical

that the results of the analysis be examined in light of actual experience. In this way, poor assumptions can be identified and spurious results avoided. B&W is not aware of any computer codes that could be used for design of the furnace that have been experimentally verified for MHD conditions; however, B&W is investigating such codes.

Furnace depth and width are 5'-0" x 7'-6" respectively up to the sloped furnace exit section. The 7'-6" dimension was established to match the boiler width for the other components (superheaters, etc.) and the 5'-0" dimension was chosen to produce furnace gas velocities similar to a large unit. Figure 4-3 shows a sectional side view of the furnace.

The sloped furnace exit section at the top of the furnace is approximately 4'-6" x 7'-6" at the inlet and it narrows to 3'-6" x 7'-6" at the furnace outlet. This sloped section is required to separate the furnace rearwall from the secondary superheater frontwall because of the higher furnace absorption rates. A common wall between the furnace and secondary superheater similar to those between the downstream boiler components would experience extremely high heat fluxes because of the dual exposure. DNB would be more likely to occur, thus the common wall was avoided. The tube construction forming the sloped section is unusual and warrants explanation. One alternative is to have the top of the furnace rearwall act as the floor of the furnace exit section and then turn downward to a header, similar to the current secondary superheater frontwall. Another alternative is to place a tube screen in the furnace exit so that the rearwall can continue upward. However, a tube screen is undesirable because the gas side of the screen could plug due to heavy slag and seed condensation. The configuration finally used turns the rearwall tubes up the slope floor and then winds half the

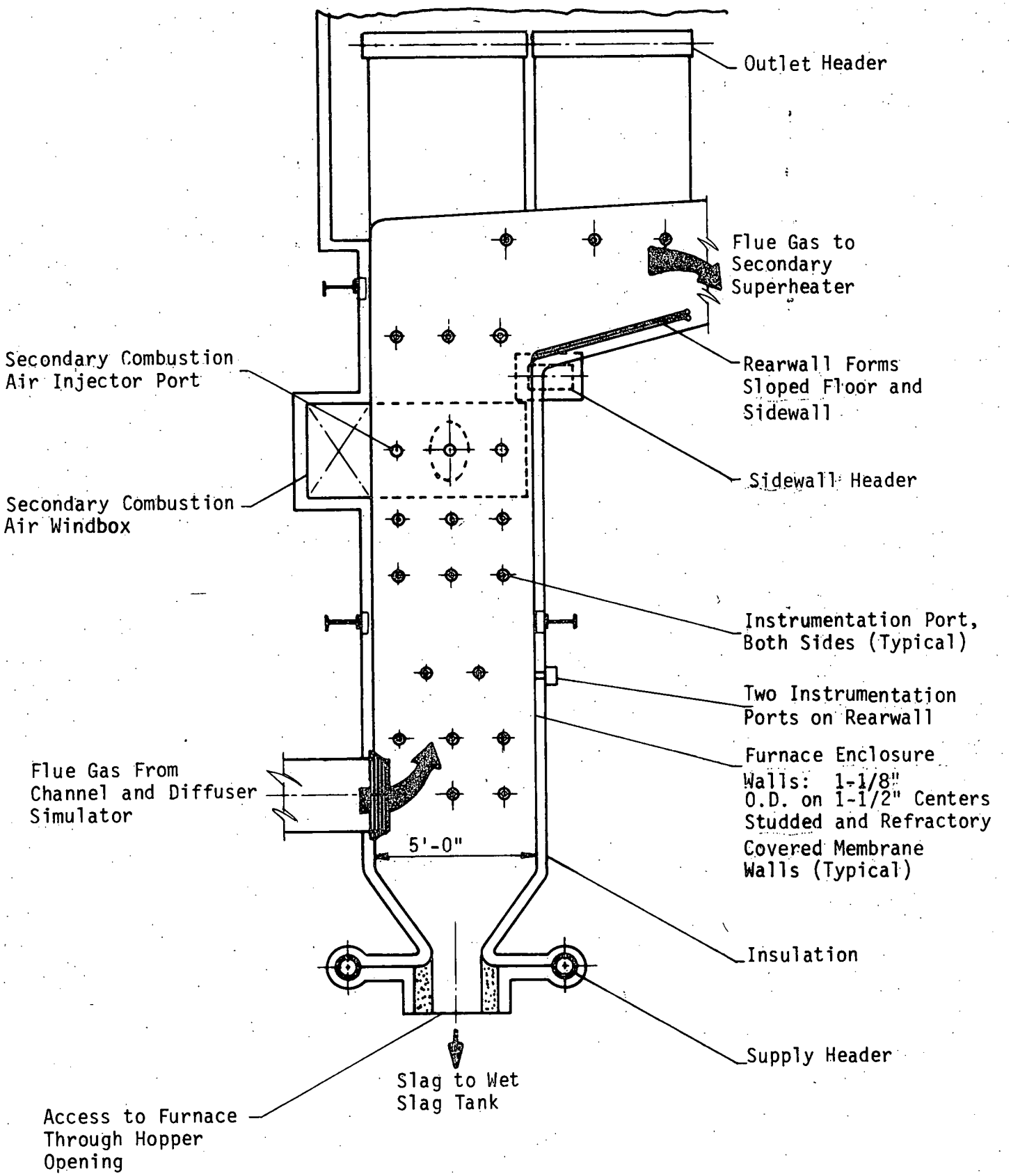

Figure 4-3 Furnace ϵ Sectional Side View

tubes around and up each sidewall. An additional small panel is needed on each slope sidewall to fill the gaps. This arrangement cleans up the tube mess and reduces the circulation by eliminating two sidewall panels required for the first two alternatives.

The velocity of the particle laden gas entering the furnace from the channel diffuser simulator is 300 fps (feet per second). Some of this gas will directly impinge on the backwall of the furnace 5'-0" across from the furnace entrance. However, based on years of experience with cyclone boilers, it is expected that erosion due to impingement will not be a problem. In some cyclone units, a slag laden gas stream has been discharged at 250 fps to a refractory covered wall as short as 2'-6" away. Erosion, in this case, was not a problem.

Primary combustion is sub-stoichiometric (minimum of 85%) and thus a secondary combustion system is provided to complete combustion. The secondary combustion system is designed to allow flexibility in the injection of the secondary air. Various port sizes and configurations can be utilized to optimize the burnout of flue gas combustibles and to study the formation and decomposition of nitric oxides. These data will serve as the basis for the design of the secondary combustion system in a commercial MHD plant.

The secondary air fan feeds air through an electric air heater and connecting ductwork to the secondary air windbox that surrounds the furnace on three sides (see Figure 4-4). The air heater raises the air temperature to 150F to simulate the air temperature in a large scale plant. In a large scale plant, exhaust air from the coal pulverizers will be used for secondary combustion air.

The heated air entering the windbox is equally distributed to both

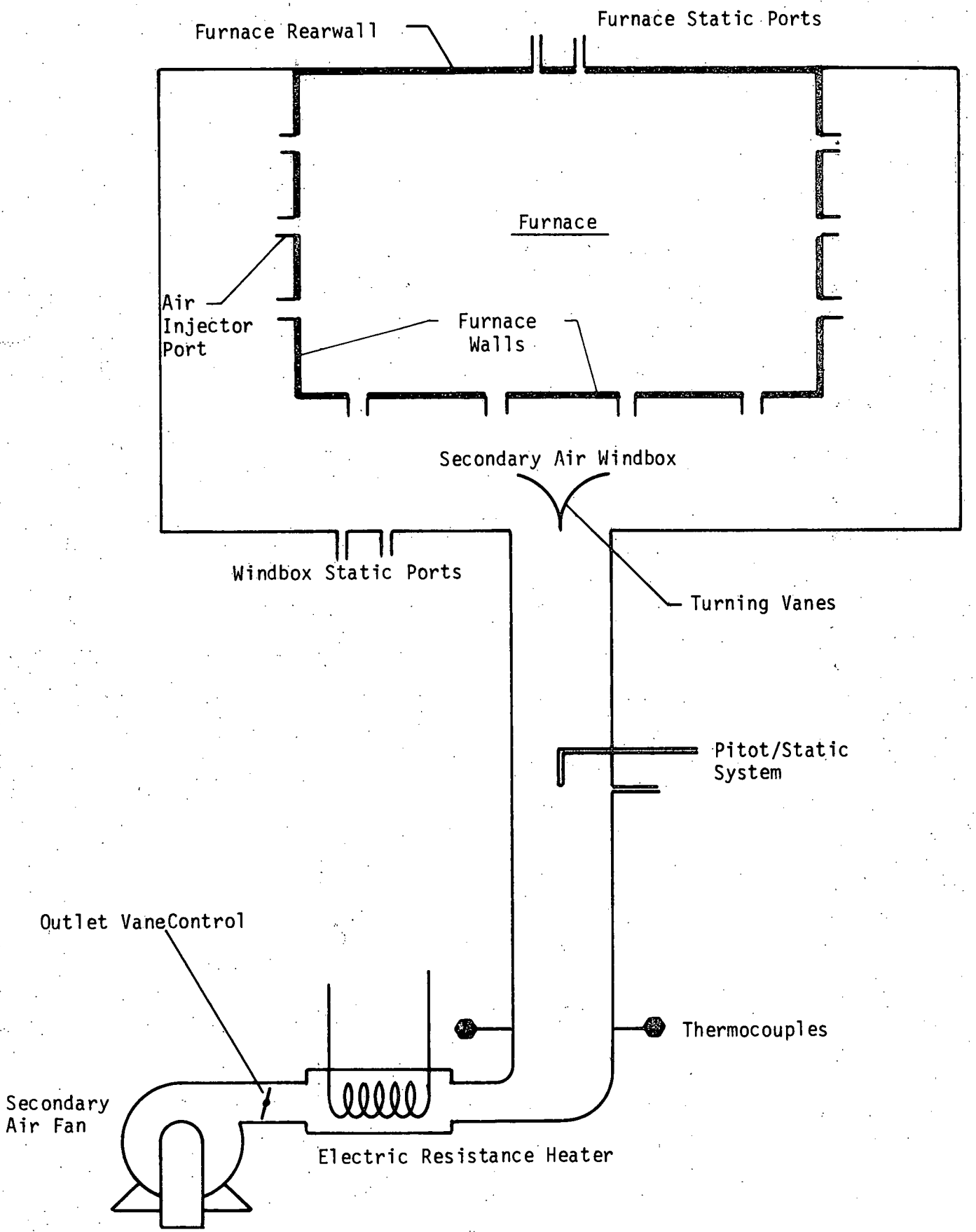

Figure 4-4 Secondary Combustion System - Schematic

sides of the windbox by the turning vanes. Also, the turning vanes prevent direct impingement of the secondary air onto the injection ports on the front side of the furnace. The distance between the furnace wall and the windbox is approximately 2'. Thus, the pressure drop through the secondary air windbox is negligible. The major resistance to secondary air flow is the pressure drop through the air injection port. This will insure uniform distribution of secondary air.

The flexibility of the secondary combustion system to create different mixing patterns by varying port configuration, port diameter and port injection angle warrants further discussion. Side and back views of the air injection port assembly are shown in Figures 4-5 and 4-6 respectively. The air injection port (Figure 4-7) is welded to a backing plate which is in turn bolted onto the air injection port assembly. This arrangement allows flexibility to change both the port diameter and port injection angle simply by attaching a different air injection port. Different port configurations (i.e., opposed, offset, frontwall only, etc.) can be tested by installing a solid refractory backing plate to the desired ports. All air injection ports must be changed manually. Thus, access doors have been placed on each of the three sides of the windbox.

Each furnace sidewall has three ports while the frontwall has four. Physical restraints inhibit the construction of air injection ports on the furnace backwall. Furnace wall tubes are bent away from the gas side to provide a 5-1/2" diameter opening into the furnace.

The secondary air injection velocity depends on the port diameter and the port configuration (see Figure 4-8). The upward draft velocity in the furnace before secondary combustion is approximately 20 ft/sec.

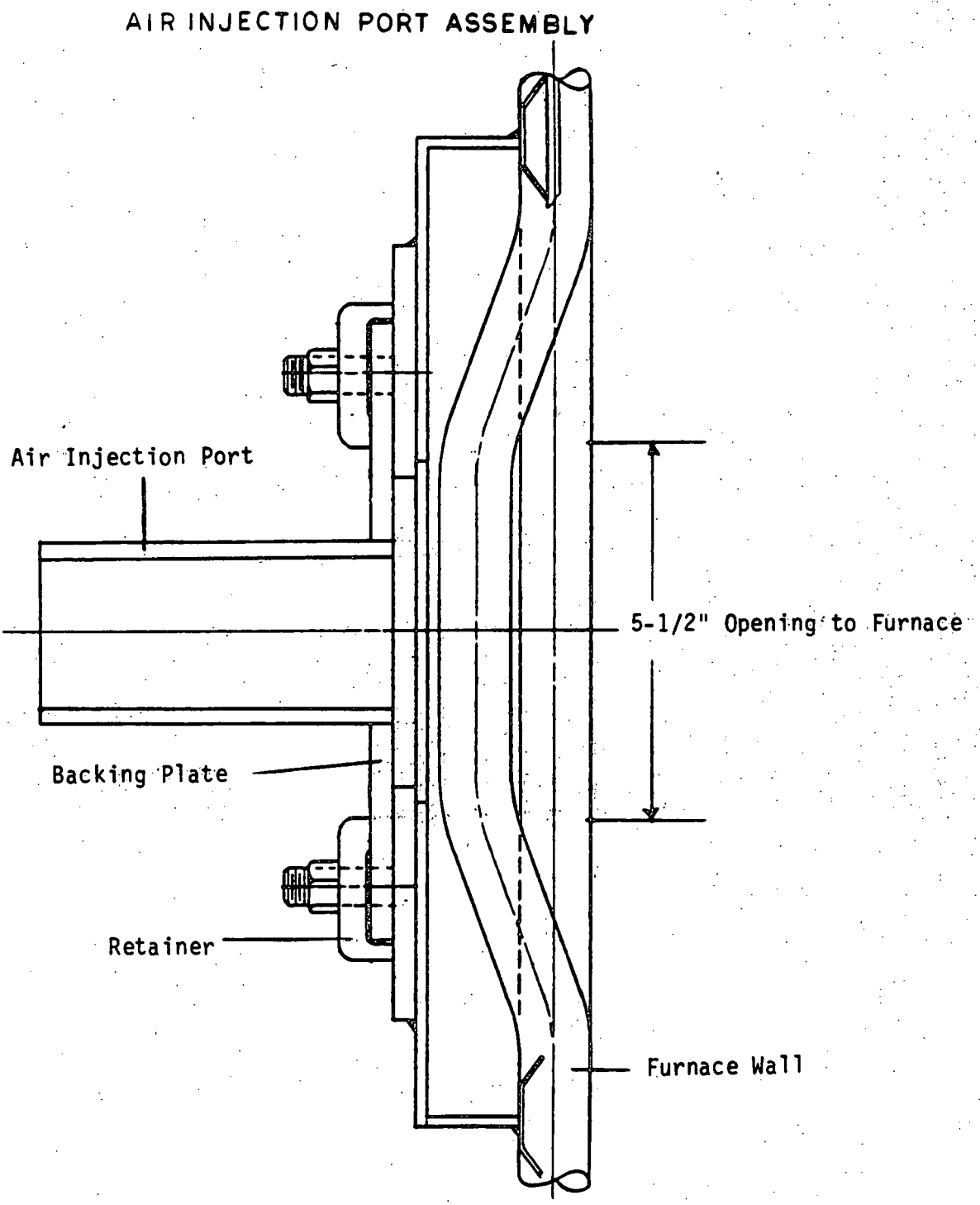

Figure 4-5 Air Injection Port Assembly - Sideview

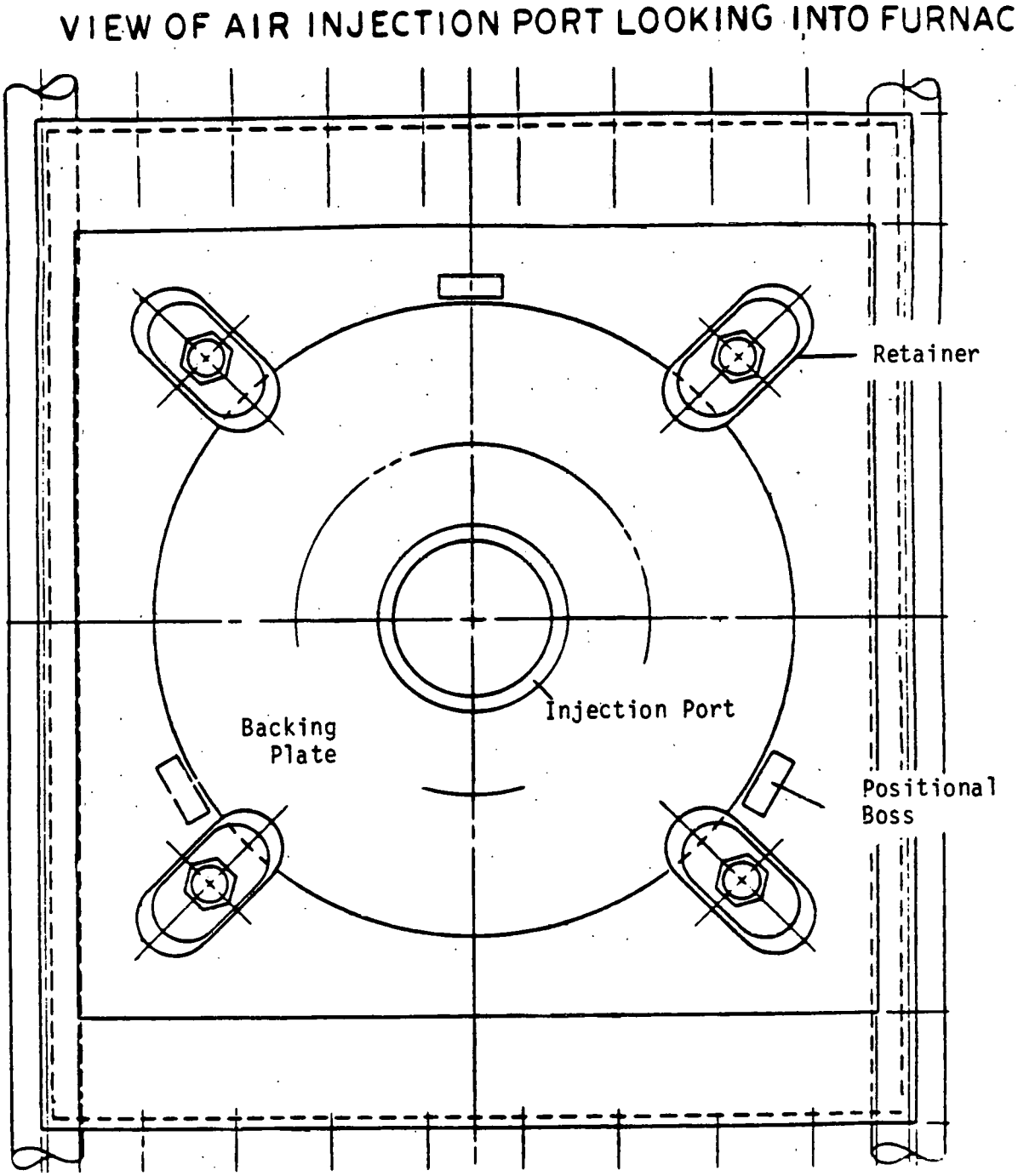

Figure 4-6 Air Injection Port Assembly - Backview

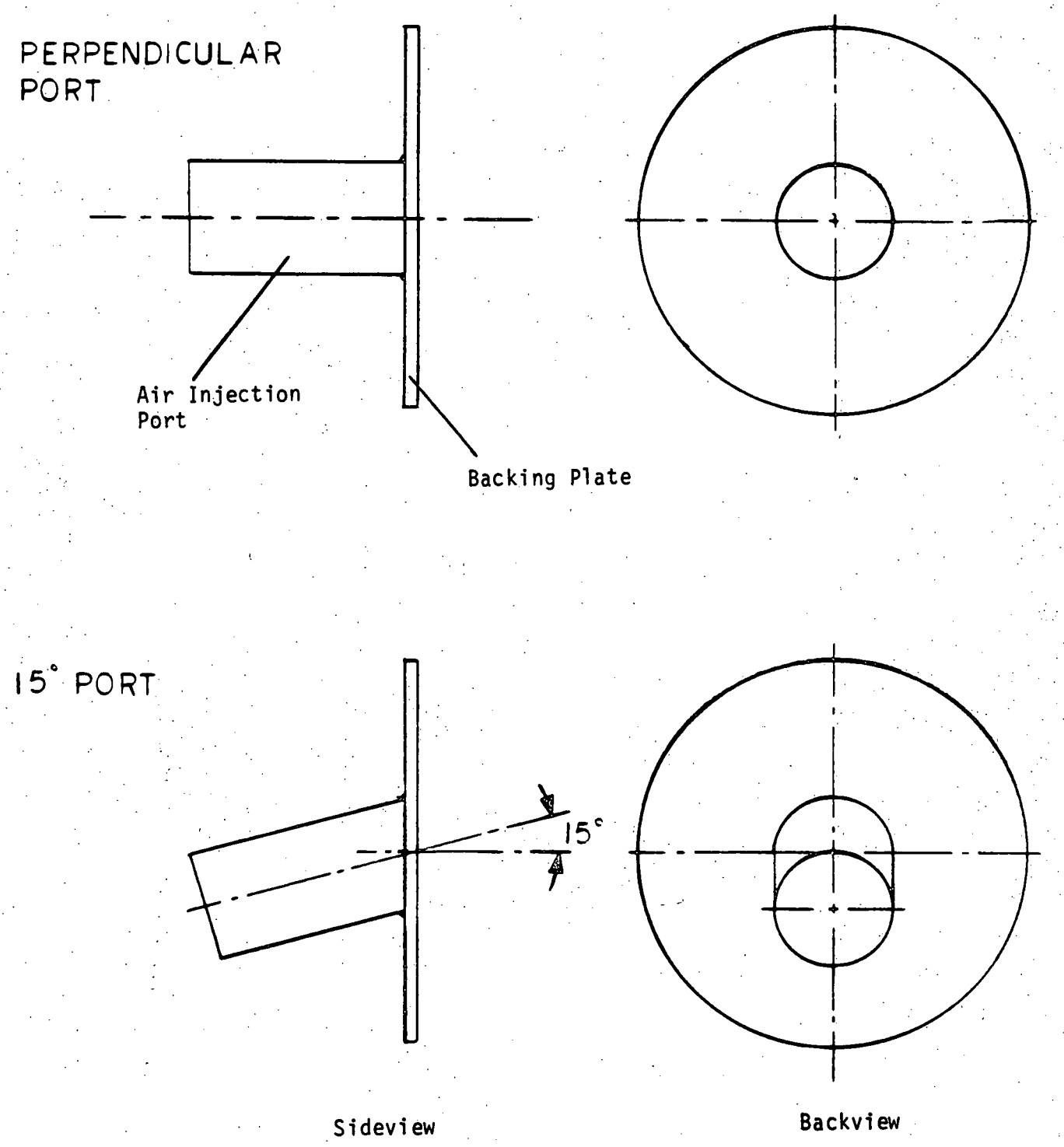

Figure 4-7 Air Injection Port

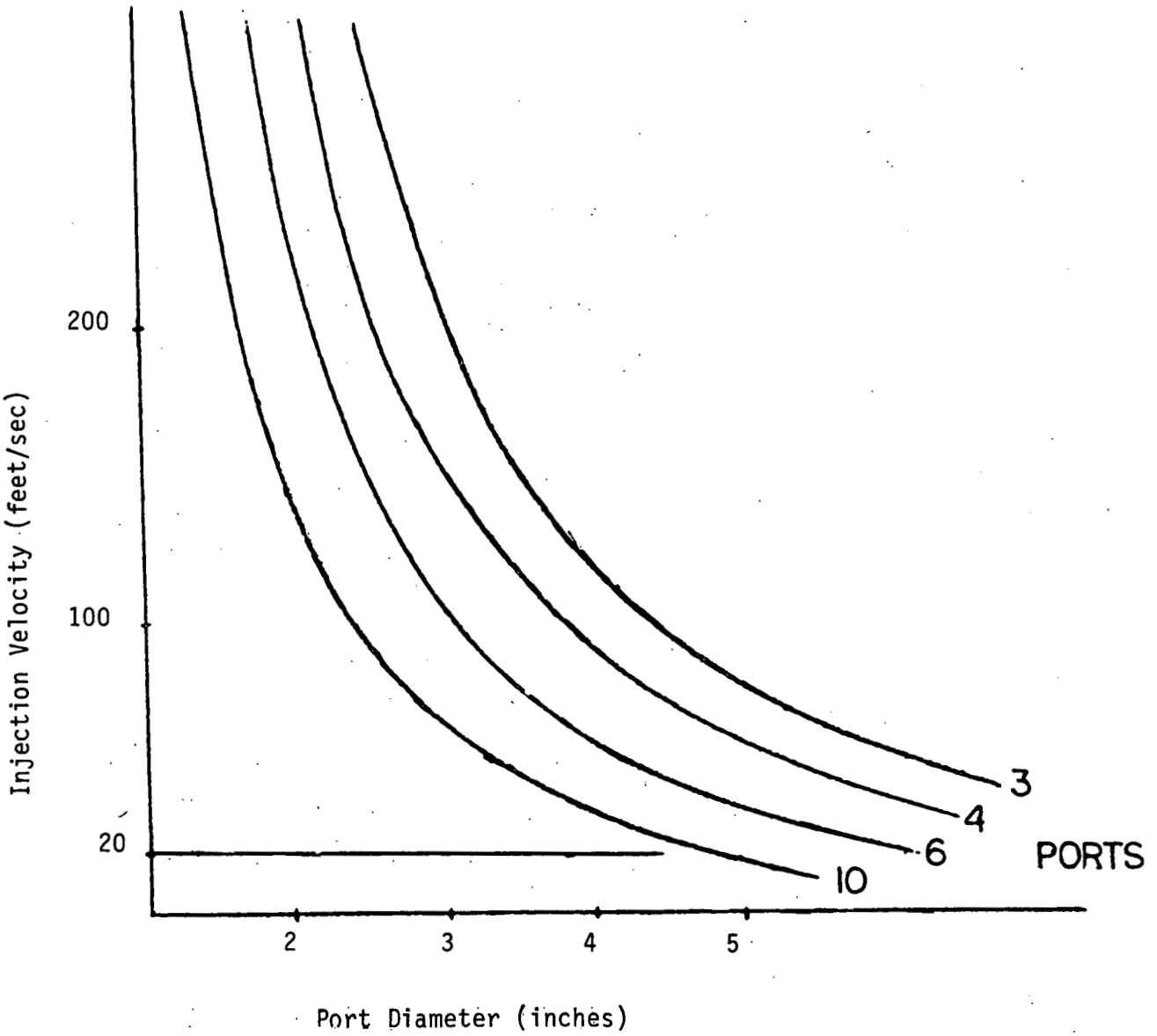

Figure 4-8 Injection Velocity vs. Port Diameter

Proper selection of the port diameter accounting for pressure drop consideration will insure proper penetration of secondary air into the furnace.

Intrusive and non-intrusive instrumentation ports are located at strategic points along the gas flow path so that gas temperature, composition, and other conditions can be measured. The location and function of these ports are discussed in Section 5.5. of Controls and Instrumentation.

The instrumentation wall openings are 5-1/2" diameter, similar to the secondary combustor port openings.

Access to the furnace will be through the hopper opening at the bottom of the enclosure.

During full load operation, the furnace receives the combustion gases from the MHD channel and diffuser simulator at 3800F, slightly sub-atmospheric pressure and a velocity of approximately 300 fps. Total gas flow is 33531 lb/hr, of which 118 lb/hr is slag. About 60 lb/hr of slag and 10 lb/hr of spent seed is expected to fall out of the furnace in molten form and into the wet slag tank at the bottom. The remaining 58 lb/hr of ash is carried downstream by the gas.

The residence time of the flue gas before secondary combustion is about 0.7 seconds. This assumes the volume below the furnace inlet is active and not stagnant. Cold flow model studies indicate this to be the case. Because of this short residence time NO_x emissions may exceed the levels set forth by the EPA in the New Source Performance Standards of the Clean Air Act. The 20MW HRSR however is immune from this standard because of the low thermal input into the unit. It should be recognized that this is a furnace size related matter and does not necessarily reflect on future larger MHD plants.

The gases are cooled to 2800F at the secondary combustion zone, where air injection and combustion raises the gas temperature to about 2980F. The furnace cools the gases after secondary combustion to 2600F at the furnace exit, where gas side pressure is controlled to -0.5 in. wg. For the entire furnace, 19.86 x 10^6 Btu/hr is absorbed by the water cooled membrane walls.

Based on the cavity method for heat transfer, the furnace was conservatively designed but the design has flexibility to handle higher heat fluxes should they occur. Two methods that could be used to accommodate higher heat fluxes are gas tempering, and increasing the furnace size.

Gas tempering involves recycling a portion of the cold exhaust gas from the outlet of the induced draft fan to the top of the furnace. B&W has performed a preliminary study of a gas tempering system that would lower the gas temperature leaving the furnace by 300F. To accomplish this, 9,300 lb/hr (2910 SCFM) of recirculated flue gas is required. The ID fan, while capable of handling the increased gas flow through the downstream components of the HRSR system, is inadequate to recirculate the gas back to the top of the furnace. For this purpose, a gas tempering fan with 9-1/2" (H_2O) of static pressure differential will be required.

The length of the furnace could also be increased up to 10'. Adequate space is available since the furnace could extend below the platform bay at the UTSI test bay. Adding or replacing a furnace section, while expensive, is not unprecedented and has been performed on commercial units.

The need for either gas tempering or increasing the size of the furnace is not expected, although the design has this flexibility.

4.2. Secondary Superheater

Upon leaving the furnace, the flue gases enter the top of the secondary superheater (SSH) through a 3'-6" high x 7'-6" wide opening. The purpose of the SSH platen is to observe the effect of the seed and slag on the superheat surface and the platen heat transfer characteristics in the 1400F - 2600F gas temperature range. A platen arrangement was used because this is the type of design which will be used in larger size plants. Various tube materials will be tested in the SSH platen for corrosion and the effect of metal temperatures.

A large commercial MHD plant would employ a reheat cycle. Reheater surface would be placed in the gas temperature range experienced in the secondary superheater. Corrosion data obtained from the SSH platen and/or by intrusive corrosion probes would be directly applicable to the design of a reheat cycle for an intermediate scale MHD plant. The addition of reheat surface would only have a marginal effect on the gas-side environment.

The superheater system has been designed so that the steam passing through the superheater platen is only a portion of the total steam generated within the system. This provides considerable flexibility in the operation of the unit as the steam flow through the superheaters may be varied as necessary to achieve the superheat design temperatures. In addition, the superheater surface may be modified without changing the basic HRSR system configuration.

Several SSH platen configurations were considered before arriving at the present arrangement. A 6 flow, 2 pass platen with 2" O.D. tubes was undesirable because of the low steam flow and high heat absorption. A 3 flow 4 pass platen with 2" O.D. tubes was rejected because the metal temperatures at the steam outlet were exceedingly high. The current

design consists of one 4 flow, 4 pass platen approximately 20'-6" long with 1-1/2" O.D. tubes (see Figure 4-9). A mixture of counterflow and parallel flow heat transfer takes place with this arrangement. The platen is centered between and parallel to the enclosure sidewalls leaving 3'-9" on each side. The backspacing between tubes is 1-3/4" from tube center to tube center. This backspacing is used in commercial size platens of coal-fired and Kraft recovery units.

Two different tube materials and three different tube thicknesses are specified because of temperature and pressure requirements and more importantly to collect corrosion data for different tube types. Rate of corrosion is an important factor because of the expected operating time. The steam side has four passes, with the tubes in the fourth and hottest pass (tubes 1-4) being 0.335" minimum thickness SA-213 Grade TP-304 (Croloy 304H). The tubes in the third pass (tubes 13-16) are also Croloy 304H with a minimum thickness of 0.203". The second pass tubes (tubes 9-12) are SA-213 Grade T22 (Croloy 2-1/4) with a minimum thickness of 0.225". The tubes in the first and coldest pass (tubes 5-8) are 0.203" minimum thickness Croloy 2-1/4. Non-heated SSH tubes (above the gas side enclosure) connecting to the headers are Croloy 2-1/4. These tubes should never reach temperatures higher than steam temperature and thus may be designed for lower duty.

The secondary superheater enclosure is approximately 22' high from the center of the inlet opening to the center of the outlet screen and has a total height of 28'-9". The enclosure has a gas flow area of 4'-3" deep x 7'-6" wide. The 7'-6" width dimension was influenced by the available space at the site.

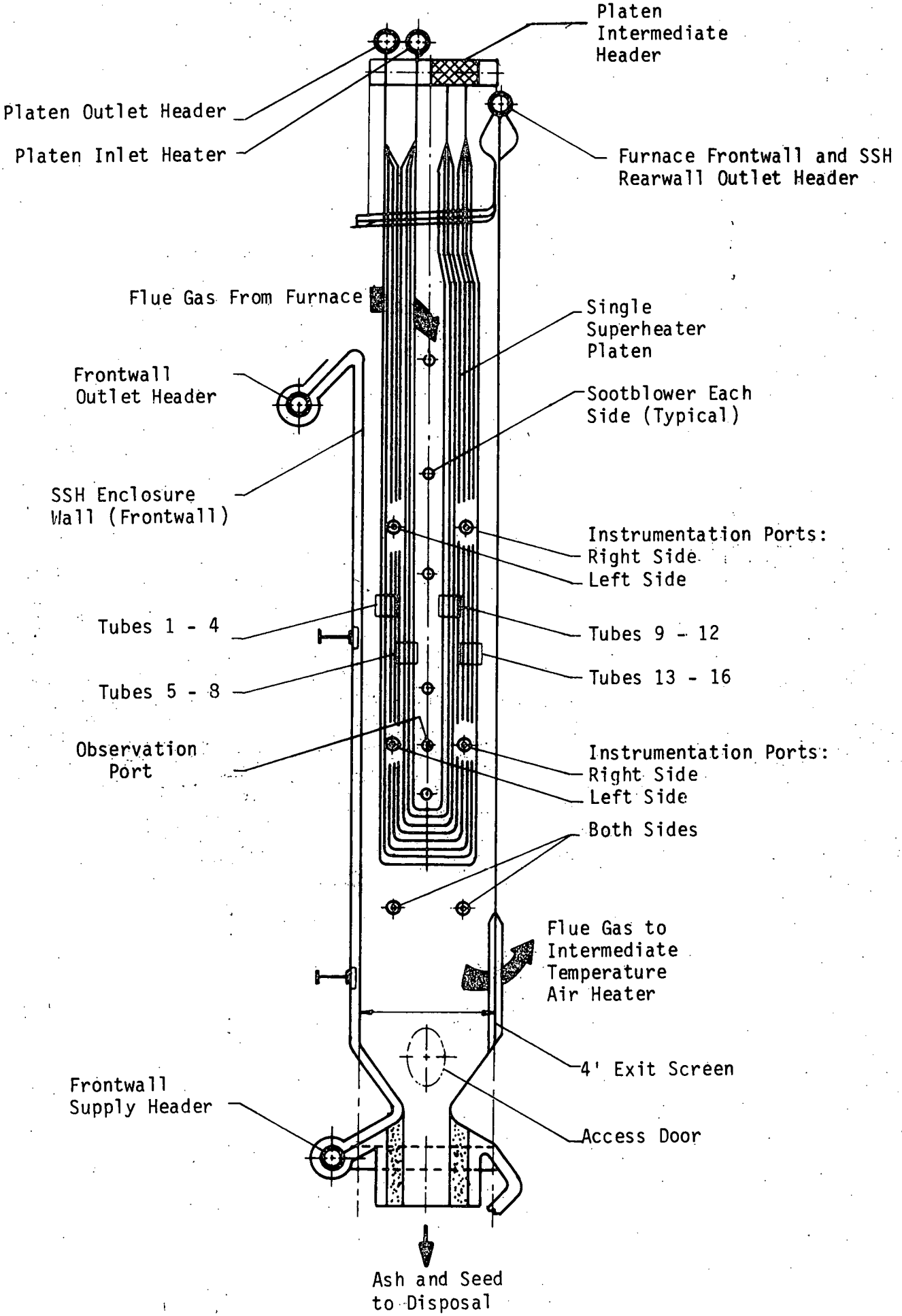

Figure 4-9 Secondary Superheater - Sectional Side View

The enclosure walls consist of 1-1/8" O.D. by 0.203" minimum thickness bare membrane tubes on 1-1/2" centers. The tubes are SA-210 Grade A1 carbon steel and are internally smooth.

A large percentage of the seed is expected to condense and solidify in the secondary superheater zone. This is based on the fact that K_2SO_4 has an equilibrium freezing temperature of about 1950F, which is within the SSH gas side temperature range. Thus the concentration of sootblowers in the SSH gas pass is about twice that of the remaining gas passes because of the large seed dropout expected. Five evenly spaced sootblowers have been provided on each sidewall to remove deposits from both the enclosure walls and the SSH platen. Sootblower travel will extend through the platen to about one foot beyond. The nozzle is back angled to more efficiently clean the platen and enclosure wall. Blowers in the SSH will be set up for water tempering, which should help to re-entrain some of the deposits. Also, an access door and observation port are provided near the bottom of the enclosure for inspection and access. Intrusive and non-intrusive instrumentation ports are provided as shown in Figure 4-9. For the Final Design Report, some of the instrumentation ports will be placed down the center of the sidewalls to permit mid-stream acquisition of data.

At full load, the flue gases enter the top of the secondary superheater at 2600F, -0.5 in. wg. pressure. The total gas flowrate is 40,250 lb/hr, some of which contains gaseous K_2SO_4. As the gas flows downward across the platen and enclosure walls, both radiation and convection heat transfer takes place, lowering the gas temperature to 1650F at the 4' high exit screen at the bottom of the SSH. As the gas temperature decreases, the seed (K_2SO_4, K_2CO_3, etc.) will condense and

solidify. Some seed will remain as particles in the gas stream and pass through to the intermediate temperature air heater. However, it is expected that most of the seed will collect on the platen, walls and exit screen and fall into the collection hopper.

The flue gas gives up 14.12×10^6 Btu/hr, with 2.05×10^6 Btu/hr absorbed by the SSH platen and 12.07×10^6 Btu/hr absorbed by the enclosure walls. Also, because of the large dropout of seed, 0.26×10^6 Btu/hr of sensible heat is lost through the hopper at the bottom.

On the steam side, the platen is fed 7545 lb/hr of superheated steam from the primary superheater after passing through a pressure reducing valve. This valve throttles the pressure from 2755 to approximately 1335 psig. The SSH exit steam temperature is controlled by steam flow to 1000F and exit pressure (after spray attemperation) is controlled by steam flow to 1300 psig.

The solids dropping out of the secondary superheater zone into the ash handling hopper include 699 lb/hr of spent seed and 12 lb/hr of ash. 224 lb/hr of solids are carried downstream to the intermediate temperature air heater with the flue gases.

4.3. Intermediate Temperature Air Heater

Following the secondary superheater in the gas path is the intermediate temperature air heater (ITAH). The ITAH consists of two passes. In the first (hot) pass the flue gas enters at the bottom, flows upward and turns 180 degrees into the top of the second pass. The flue gas then flows down and exits the ITAH at the bottom of the second (cold) pass. The ITAH surface is a single flow counterflow arrangement located

in the two gas passes. The steam first flows upward in the cold pass and then flows down in the hot pass (see Figure 4-10).

The main purpose of the intermediate temperature air heater for the 20 MWt test facility is not to heat air but rather to simulate ITAH metal temperatures and gas conditions expected for the 300 MWt plant. Thus steam is used as the heat transfer fluid since it is readily available and eliminates the need for a compressor.

The original design of the ITAH called for a maximum metal temperature of about 1600F. This temperature apparently was specified in the interest of higher plant efficiency without regard to commercial limitations. After extensive research, it was found there are currently no commercially available tubes that are expected to operate at this design temperature and survive the corrosive atmosphere. As a result, the ITAH is designed for a maximum metal temperature of less than 1400F, which results in a 1200F outlet steam temperature. The 1400F metal temperature limit conforms to B&W standards and ASME codes. Space is available for additional surface (see Figure 4-10) at the hot end of the first pass to increase the steam temperature to 1400F if a suitable metal is found in the future. Also, a port is provided at the bottom of the first pass for the insertion of corrosion probes. The corrosion probes are air cooled to control metal temperature.

The sizing and arrangement of the ITAH surface was influenced by a relatively large amount of water wall surface, a 1200F steam outlet temperature and numerous sootblowers and access doors. The ITAH tubes were arranged in a horizontal rather than a vertical orientation in order to test the worst fouling conditions. The horizontal tube arrangement is clearly favored for a large scale plant based on economic

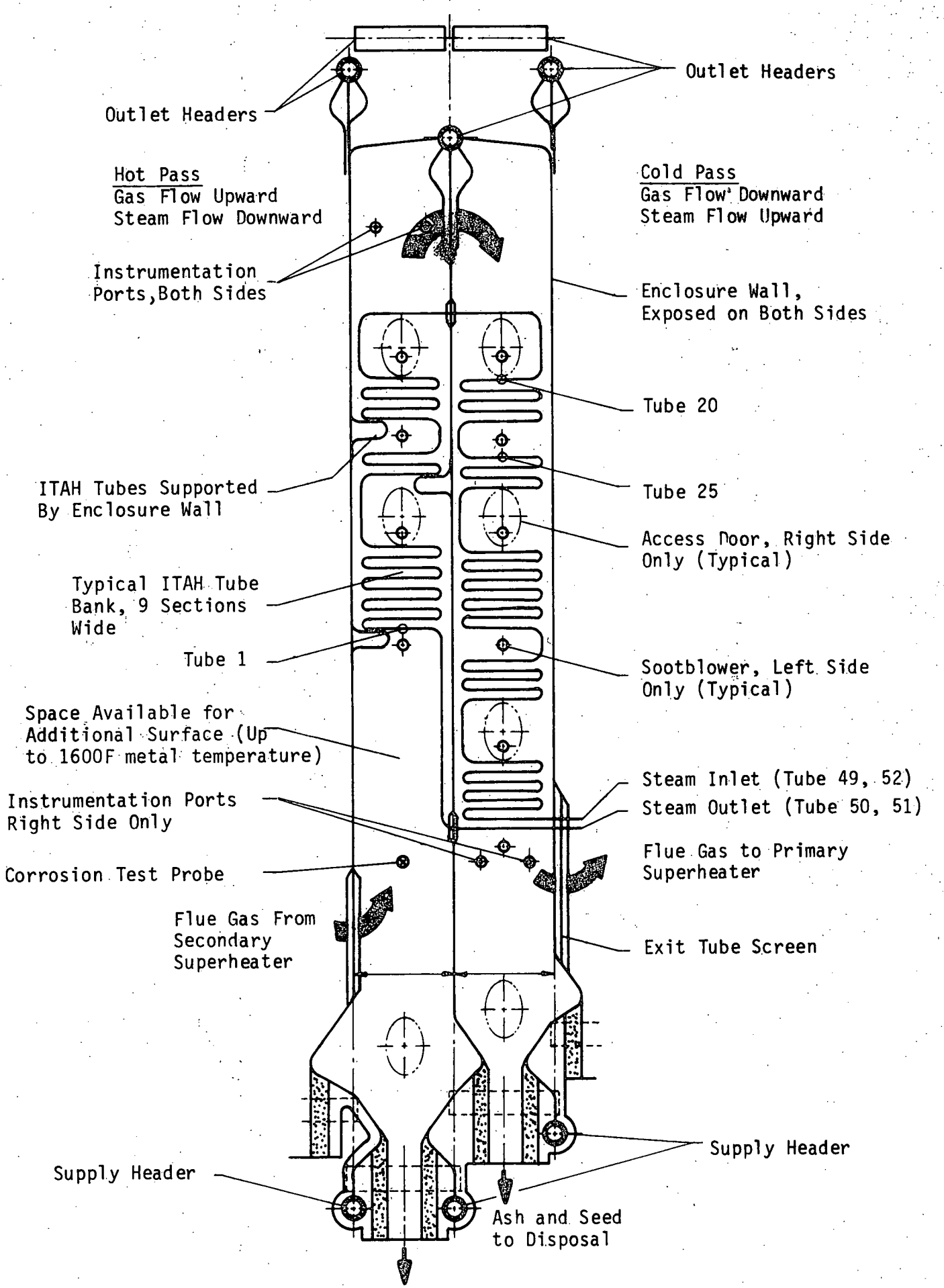

Figure 4-10 Intermediate Temperature Air Heater - Sectional Side View

considerations. It is thus desirable to test fouling on a horizontal tube orientation in the HRSR test rig. The ITAH surface is nine sections wide with 18 tube rows in the hot pass and 32 tube rows in the cold pass. The inlet and outlet rows pass through the primary superheater. Tube sidespacing (between sections) is 9", matching the membrane wall construction. The backspacing (between tube rows) is 3-3/4", with both dimensions measured from tube center to tube center.

Tube sidespacing is an important dimension in heat transfer surface design and boiler economics, in general. Sidespacing is the distance between tube sections, perpendicular to the gas flow.

Sidespacing is widest in higher gas temperature regions such as the secondary superheater. Since radiation heat transfer is significant in these higher temperature regions, increasing the sidespacing increases the mean radiating length and thus enhances heat transfer to the tubes. The exact dimension is determined by the most economic combination of metal temperatures, metal costs, steam temperatures and steam flows. Also, fouling from ash deposits is typically more severe in the higher gas temperature region, such as the SSH and the front end of the ITAH. Deposits are typically stickier and more difficult to remove, thus adequate sidespacing must be maintained to avoid pluggage of the gas passages. Since rate of deposition is proportional to the amount of ash suspended in the flue gases, the steam-carrying surface toward the front end of the boiler also experiences more severe fouling simply because there is more ash in the gas stream here than at the back end.

As gas temperature decreases, the sidespacing decreases. Convection becomes the dominant mode of heat transfer. Less exotic tube materials can be used, thus the cost of adding more surface is less in

the lower temperature regions such as the primary superheater and economizer. Also, there is less ash suspended in the gas which reduces the fouling potential. Any fouling that does occur can be handled more easily by proper sootblowing, as lower temperature deposits typically have less strength than higher temperature deposits.

Because the tube metal temperature increases from steam inlet to outlet, three different tube materials are specified. This follows common commercial practice. Tube rows 25-49, 52 are 0.230" minimum thickness SA-209 Grade T1a (carbon molybdenum). Refer to Figure 4-10 for tube row identification. Tube rows 20-24 are 0.230" minimum thickness SA-213 Grade T22 (Croloy 2-1/4). Tube rows 2-19 are 0.230" minimum thickness SA-213 Grade TP-304H (Croloy 304H). The hottest tubes, tube rows 1, 50 and 51, are 0.180" minimum thickness Croloy 304H. All tubes are 3.0" O.D. except tube rows 1, 50 and 51, which have a 2.5" O.D. The steam outlet header is stainless steel (Croloy 304H) and is designed for 1400F outlet steam should additional surface be added.

The ITAH enclosure has a gas upflow and downflow section, each with a gas flow area of 3'-3" deep x 7'-6" wide. The height of each section is approximately 24' and 22' respectively from the centerline of the inlet screen to the centerline of the outlet screen. The enclosure walls consist of 1-1/8" O.D. by 0.203" thick bare membrane tubes on 1-1/2" centers. The tubes are internally smooth SA-210 Grade A1 carbon steel.

For deposit removal, ten sootblowers are provided at the cavities between tube banks. Sootblowers enter the enclosure from the left sidewall. Seven access doors are provided on the right sidewall for access and inspection. Instrumentation ports are provided as shown in Figure 4-10.

During full load operation, the ITAH receives the flue gases through the 4' high screen at the bottom of the secondary superheater at 1650F, -0.6 in. wg. pressure. The total gas flowrate is 39,539 lb/hr. The flue gases then flow upward across the hot pass tube banks, through a tube screen at the top, downward across the cold pass tube banks and out the tube screen at the bottom at 1009F. A total of 7.84×10^6 Btu/hr is given up by the gas, with 2.96×10^6 Btu/hr absorbed by the ITAH surface and 4.88×10^6 Btu/hr absorbed by the enclosure walls.

6869 lb/hr of saturated steam enters the ITAH at 363F and leaves at a temperature of 1200F. Total steam pressure drop is approximately 5 psi across the entire component.

The solids removed from the flue gas in the intermediate temperature air heater zone include 56 lb/hr of potassium compounds and 5 lb/hr of ash from the hot pass. Solids removed from the cold pass include 35 lb/hr of potassium compounds and 2 lb/hr of ash. 136 lb/hr of solids are carried downstream to the primary superheater by the flue gas.

4.4. Primary Superheater

The primary superheater (PSH) is the final gas side component of the boiler. The PSH receives the flue gases from the ITAH at the bottom through a tube screen. The gases then flow upward across the PSH surface and out of the boiler enclosure at the top. Steam flows up and down through the PSH surface as described below.

The amount and arrangement of PSH surface employed was influenced by such factors as a 22" sootblowing radius, enclosure wall needs for bending tubes out of place for screens and penetrations, and a desired boiler outlet temperature of 825F. The primary superheater surface

consists of 2-1/2" O.D. by 0.284" minimum thickness carbon-molybdenum tubes, 19 sections wide with 24 rows of tubes in each section (see Figure 4-11). The sidespacing is 4-1/2" to match up with the membrane wall construction and the backspacing is 3-1/4". Note that sidespacing is half that of the ITAH because of the reasons outlined in the ITAH section.

The PSH enclosure is approximately 21' in height from the center of the inlet screen to the center of the outlet screen and has a gas flow dimension of 3'-3" deep x 7'-6" wide. The enclosure walls consist of 1-1/8" O.D. by 0.203" minimum thickness bare membrane tubes on 1-1/2" centers. The tubes are SA-210 Grade A1 carbon steel and are internally smooth.

Six sootblowers are provided for deposit removal, entering the enclosure from the left sidewall. Four access doors are provided on the right sidewall of the cavities between tube banks for access and inspection.

The primary superheater was initially designed to have steam down flowing with an up flowing gas (counterflow) to maximize heat transfer. Because of the small amount of steam flow, the PSH was also originally designed for all flow through one tube, i.e., single flow. However, the total steam flow (7914 lb/hr) and the resulting pressure drop per tube was so small, a single flow arrangement resulted in an unstable condition. Thus the PSH was changed to its present flow arrangement with diaphragms in the upper and lower headers, shown in Figure 4-12. This increases the flow and pressure drop per tube to produce a stable condition. The configuration is now actually a mixture of counterflow and parallel flow.

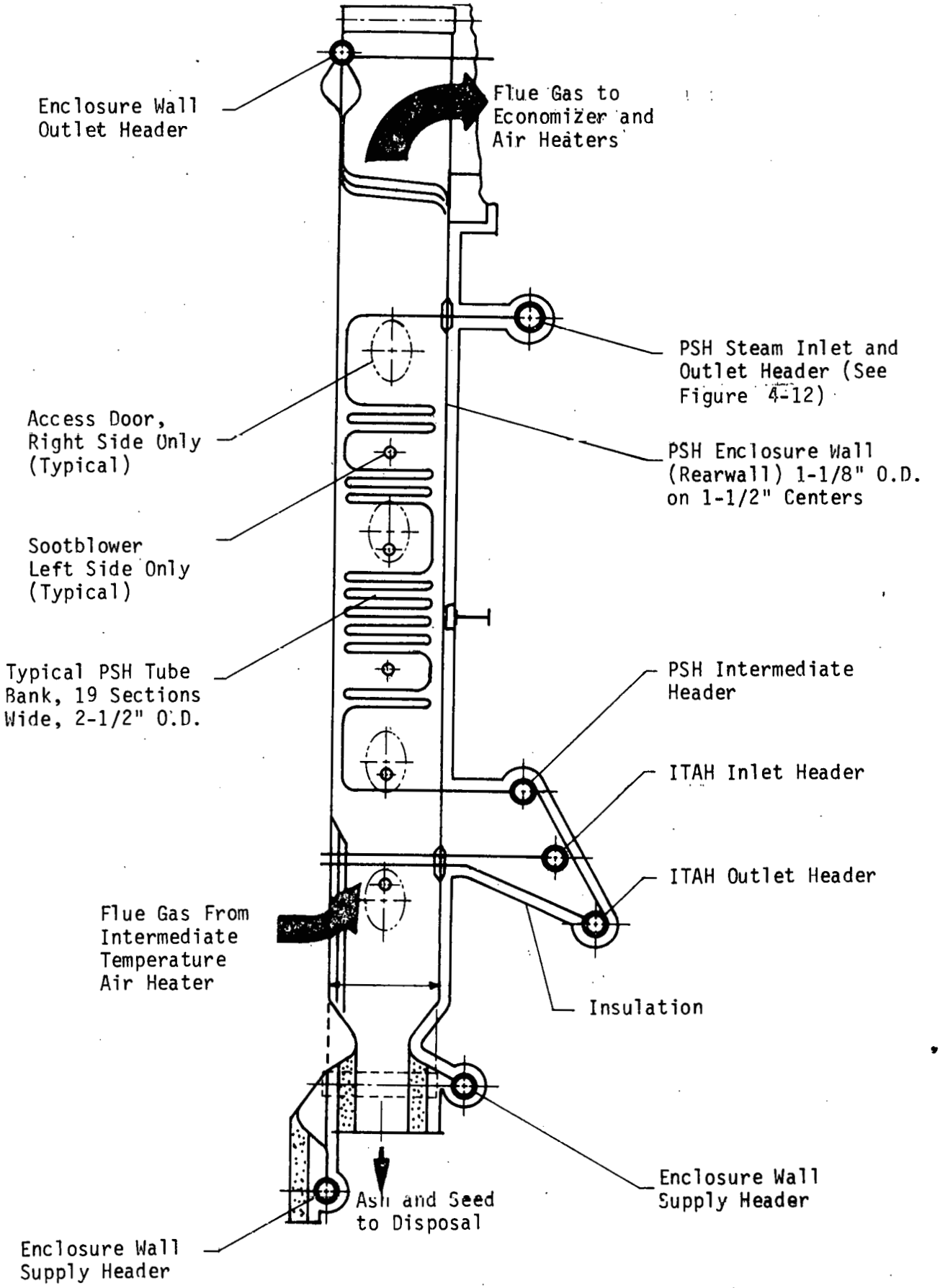

Figure 4-11 Primary Superheater - Sectional Side View

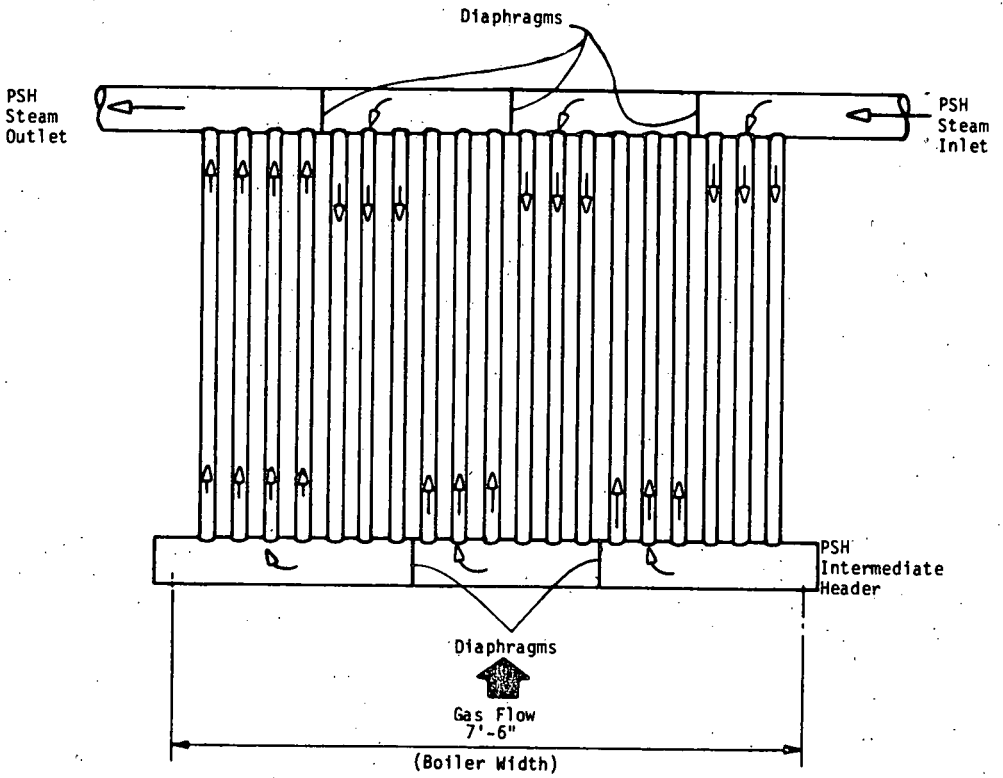

Figure 4-12 Primary Superheater - View of Steam Surface

At full load, the flue gases enter the screen at the bottom of the primary superheater at 1009 F, -1.0 in. wg. with a total gas flow rate of 39,441 lb/hr. As the gases flow upward across two rows of ITAH tubes, the PSH tube banks and past the exit screen, the gases are cooled to 823F. A total of 2.14×10^6 Btu/hr is rejected by the gas, with 1.39×10^6 Btu/hr absorbed by the superheat surface and 0.75×10^6 Btu/hr absorbed by the enclosure walls.

7914 lb/hr of saturated steam enters the PSH at 685F and goes through a total pressure drop of 30 psi. The PSH outlet temperature is 750F and is controlled by steam flow. Commercial practice is to control the primary superheater and secondary superheater steam temperatures by adjusting firing rate, gas recirculation and spray attemperation. Controlling steam temperature by controlling steam flow is an alternative used only in an emergency. In an actual power plant the part

load steam flow is distributed differently in the various heater elements than will be the case in the HRSR development facility. This is not a problem for the test facility, but these differences from commercial practice do exist.

The solids removed from the primary superheater include 37 lb/hr of potassium compounds and 2 lb/hr of ash. The dry solids are collected in a hopper at the base of the unit.

4.5. Economizer

After leaving the primary superheater, the flue gases pass through rectangular ductwork and enter the economizer. The economizer heats the boiler feedwater flowing to the steam drum. The purpose of the economizer for this project is to reveal potential effects of an MHD type flue gas such as corrosion and pluggage on an economizer surface in the gas temperature range of 825F to 330F. Also, the function of the economizer is to cool the flue gases flowing to the electrostatic precipitator to 330F.

The equipment is designed to have upflowing economizer water to insure stability coupled with a downflowing gas pass to maximize heat transfer. This counterflow arrangement minimizes the amount of surface required to reduce the gas temperature to 330F. However, there is enough surface required to warrant splitting the economizer into two gas passes, which produced the uncommon ductwork design. The flue gas enters at the top of the unit and flows downward over the economizer surface in the hot pass. At the bottom, the gas turns 180 degrees and travels back to the top via one of two connecting flues shown in Figure 4-13a. The flue gas is then directed diagonally over the top

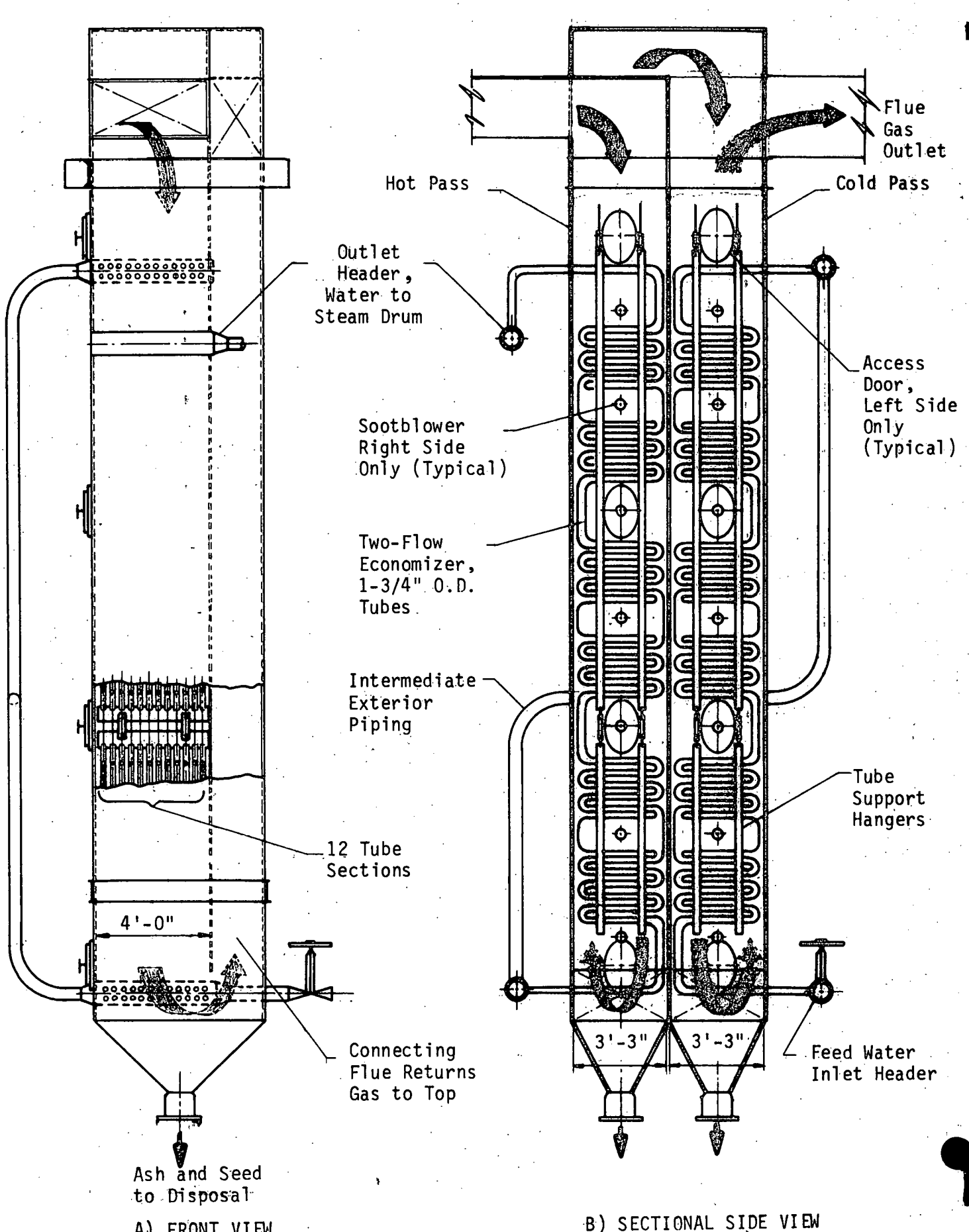

Figure 4-13 Economizer

of the unit and back downward across the cold pass economizer surface. After another 180 degree turn, the gas flows up through the other connecting flue and exits the economizer at the top.

The economizer surface in each pass consists of 1-3/4" O.D. by 0.203" minimum thickness tubes made of SA-210 Grade A1 carbon steel. Each pass is 12 sections wide and has a total of 72 tube rows distributed among six tube banks (see Figure 4-13b). The economizer is two-flow to reduce the quantity of extremely small radius tube bends. Tube side-spacing is 3-3/4" from tube center to tube center. This sidespacing is 3/4" less than that of the PSH because of the boiler economics discussed in Section 4.3. The backspacing between tube rows is 2-1/2" from center to center.

During full load operation, the boiler feedwater enters the economizer at the bottom end of the cold pass at 250F, rises through the tube banks and exits at the top of the pass into an intermediate header. Exterior piping directs the flow from this header back down to a header at the bottom of the hot pass. The water again enters the economizer and flows upward, exiting at the top of the unit at 356F and continuing to the steam drum. Total pressure drop is approximately 12 psi from inlet to outlet header, due mostly to the static head involved.

The economizer is enclosed by a 3/16" thick carbon steel casing. Each pass is approximately 30' in height and has a gas flow area of 3'-3" deep by 4'-0" wide. At full load and when the low temperature air heaters are not operating, 39,402 lb/hr of flue gas enters the top of the economizer at 823F via a 2'-0" high x 4'-0" wide duct. The flue gases flow through the economizer as described above and exit to the outlet plenum at 329F. Draft loss through the entire economizer is

6.0 in. wg.

A total of 5.34×10^6 Btu/hr of heat is given up by the gases and absorbed by the economizer surface. The metal casing is insulated and considered non-absorbing, thus representing a minor heat loss.

Fourteen sootblowers are provided at the cavities between tube banks to control solids build-up. A minimal amount of ash and seed deposits are expected to collect and drop out here. Also, eight access doors are provided for access and inspection.

4.6. Test Air Heaters

As discussed in Section 3.1.7., two air heater test sections have been incorporated in the HRSR to simulate conditions for both a tubular air heater and a regenerative air heater. These test air heaters, often referred to as low temperature air heaters, are linked in parallel on the gas side with each other and the economizer.

These low temperature air heaters are used in larger plants to preheat combustion air. A tubular air heater was specified for the 300 MWt MHD Plant in the Scale Up to Large Size System Report. Thus a small tubular air heater will be tested on this unit, similar in design to the type used on large scale plants. Fouling and corrosion effects on the air heater tubes will be observed, as well as heat transfer performance.

Typical regenerative air heaters are only manufactured in sizes to suit utility and industrial plants larger than the HRSR unit. Even though not specified for the 300 MWt Unit, regenerative air heaters may

be used on larger future MHD plants. Therefore, a system that simulates a typical regenerative air heater will be installed on the 20 MWt Unit to obtain test data on the fouling and corrosion effects of an MHD-type gas on regenerative surface. Heat transfer performance will also be tested.

The test air heaters will not operate continuously throughout the entire test period. They will only be operated intermittently in accordance with the specific test plan. The air heater design has the capability to double the design mass flow through either the tubular or regenerative air heater while the other one is inoperative. This provides the flexibility to test the effects of higher mass velocities on erosion, corrosion, fouling and heat transfer if desired. The air heater design also has the flexibility to achieve lower gas exit temperature by reducing the gas flow and increasing the air flow through the desired air heater. This would permit testing of potential corrosion by sulfuric acid at lower temperatures. However, testing at lower temperatures is largely academic since the addition of a significant amount of additional heat transfer surface to pick up a relatively small amount of heat for a large scale plant is economically prohibitive. The law of diminishing returns between plant efficiency and plant economics is in effect here. When the air heaters are not operating, the entire gas flow will pass through the economizer. Sections 4.6.1. and 4.6.2. below describe the specific design and operation of the tubular and regenerative air heaters respectively.

4.6.1. Tubular Air Heater

With a tubular air heater, heat is transferred directly from the

hot gases on one side of the surface to air on the other side. This particular air heater has a hot and cold gas pass. Each pass has a nest of straight tubes expanded into tube sheets and enclosed in a reinforced steel casing. This casing functions to contain the air and is provided with air and gas inlet and outlet openings, as well as an ash collection hopper and structural steel supporting members.

As shown in Figure 4-14, the flue gas enters the hot pass and flows through the tubes. The gas then turns 180 degrees in the hopper and flows back up the tubes in the cold pass. The air enters in the cold pass, passes over the tubes and exits at the top of the hot pass. The resulting heat transfer is crossflow and counterflow.

Tube construction consists of two separate sections of 15 wide by 11 deep tube matrices. Each tube is 1-1/2" O.D. by 0.083" minimum thickness and stands about 15' in height. Tube spacing in the matrix is 2" center to center in each direction. The tube sections are bottom supported, with an expansion joint at the top to prevent air leakage and allow thermal expansion during operation.

The air side is enclosed by a 3/16" thick carbon steel casing 2'-1" wide. The air makes three passes over each tube matrix, for a total of six air passes. For each of the hot and cold gas passes, the top two air passes are 5' high and the bottom pass is 4.8' high as dimensioned in Figure 4-14.

Sootblowers are located at both ends of the cold pass and are oriented so that the blowing element travel is perpendicular to the gas flow (see Section 4.9.10., Sootblowers, for more details). Also, five access doors are provided on the right side so that any internal space in the air heater can be accessed.

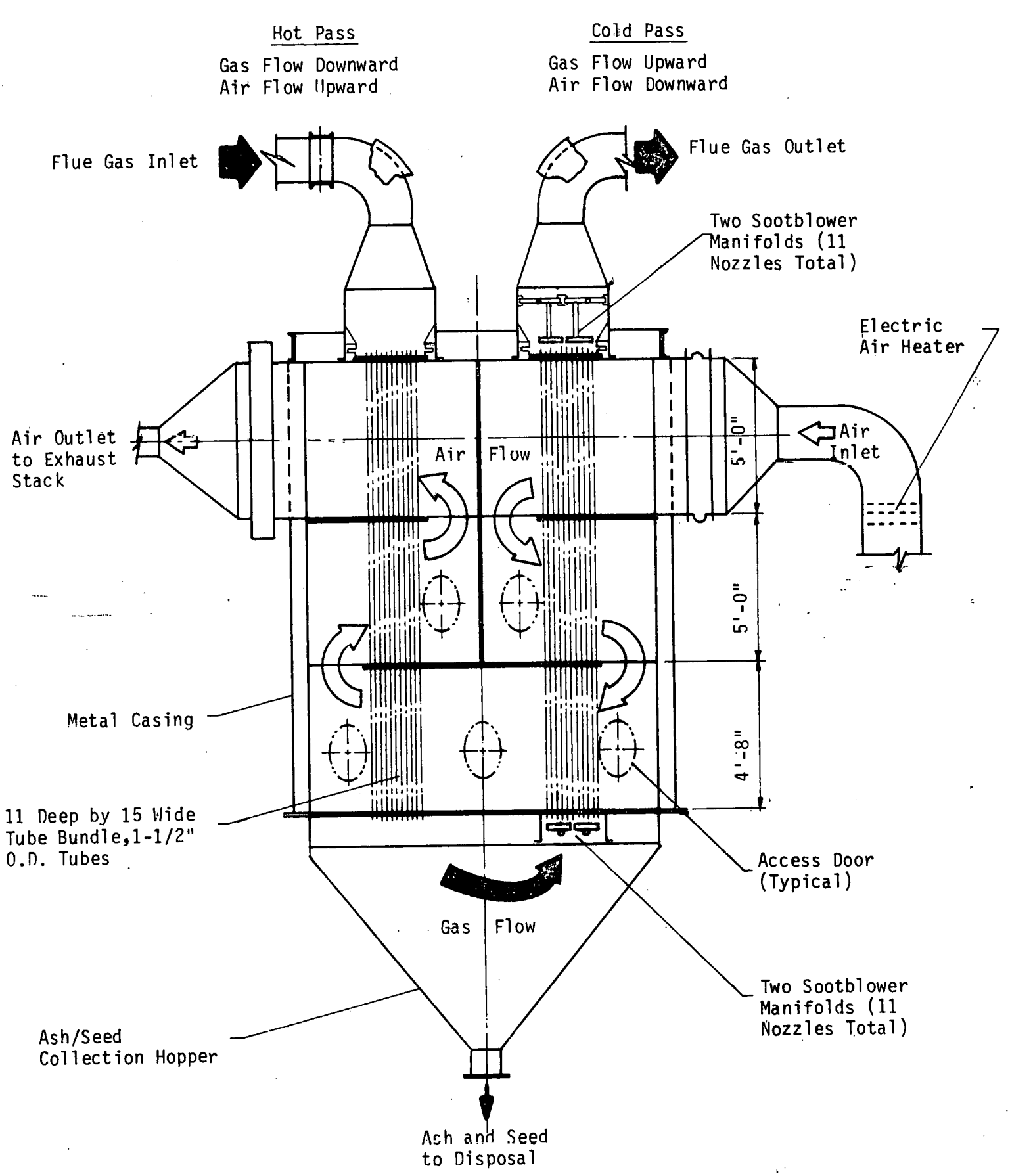

Figure 4-14 Tubular Air Heater - Sectional Side View

During testing, when the HRSR is at full load, 6225 lb/hr of flue gas enters the hot end of the air heater at 823F. The gas flows through the hot end, moves to the cold end via the sloped ash collection hopper at the bottom, then passes up the remaining tube matrix exiting at 330F. Gas side draft loss through the tubes is about 1.2 in. wg. On the air side, 6000 lb/hr of preheated air from the forced draft fan and electric air heater enters the unit at 125F, passes six times over the tube bundles and exits to an air exhaust stack at 690F. Air resistance over the tubes is approximately 0.6 in. wg.

4.6.2. Regenerative Air Heater

In regenerative air heaters, the heat is transferred indirectly from the hot gases to the air through an intermediate heat storage medium. There are basically two types of regenerative air heaters. One is called a rotating-plate-type, in which the surface moves and the air and gas supply remain stationary. The other is a stationary plate type, operating just the opposite of the previous type.

The size of the 20 MWt HRSR System is considerably too small to include a regenerative air heater. To simulate what would occur in a full size regenerative air heater a section of commercial surface will be utilized. This section will be arranged with valves in the air and gas inlets and outlets. By manipulating these valves the action of a conventional regenerative air heater, which alternately is exposed to flue gas and combustion air, will be simulated.

Specifically, the regenerative surface is housed in a square metal casing approximately 6' long (see Figure 4-15). Hot gas enters at the top of the air heater, passes downward over the surface and exits at the bottom. The cooled gas then flows upward and exits to the precipitator

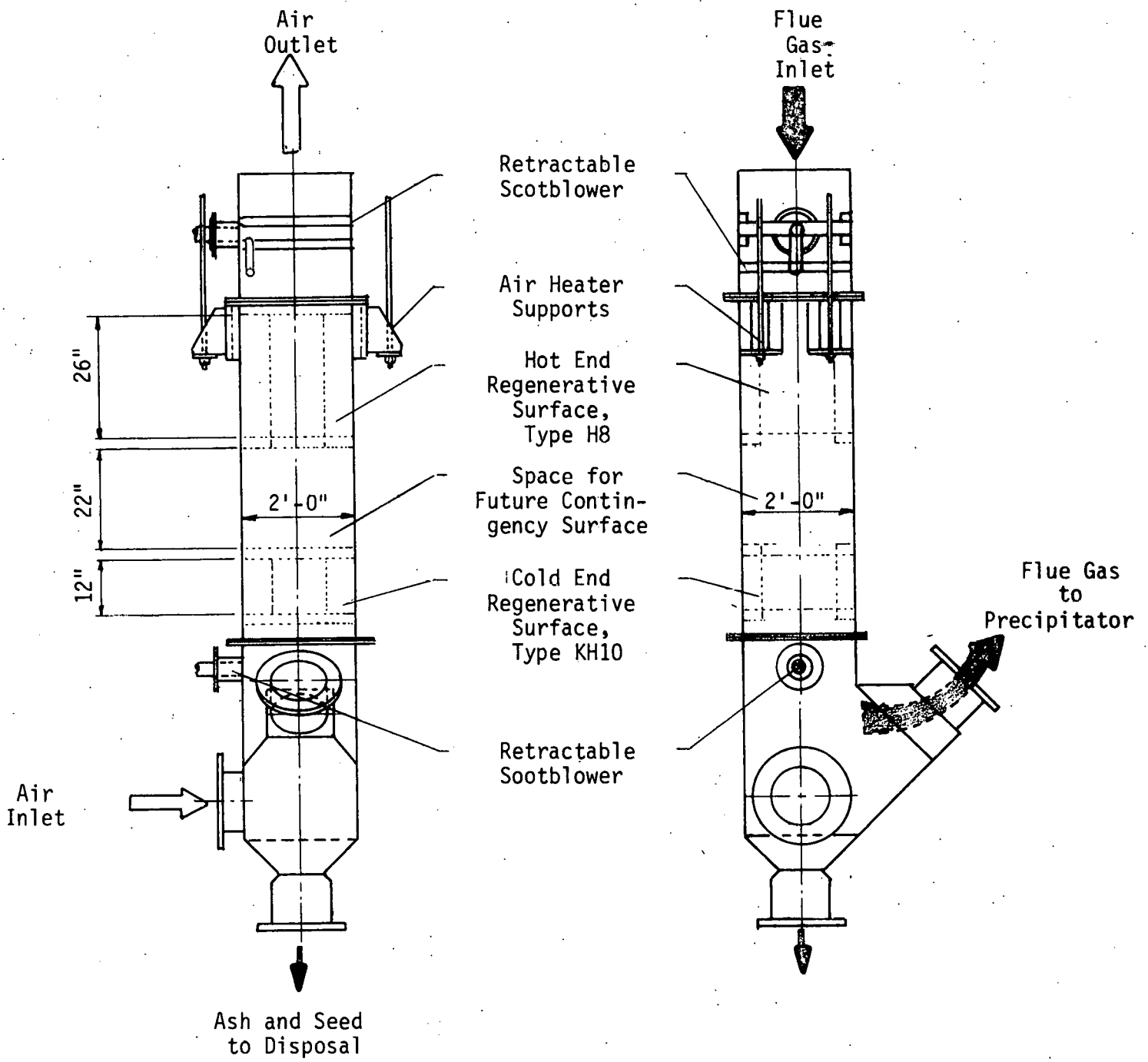

a) REAR VIEW
Illustrating Air Cooling Cycle

b) SIDE VIEW
Illustrating Gas Heating Cycle

Figure 4-15 Regenerative Air Heater

via the common plenum. Cold air from the forced draft fan and electric air heater enters the bottom of the air heater, flows upward over the surface and is vented to the atmosphere via the same stack as the tubular air heater.

The heat transfer surface consists of two small, stationary 2'-0" square sections of Rothemuhle regenerative surface. The hot end is a 26" deep section of H8 surface (see Figure 4-16). The cold end is a

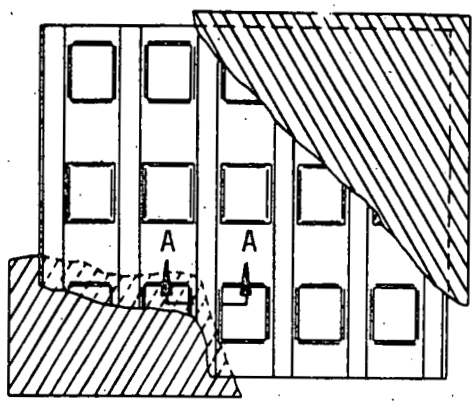

a) Side View

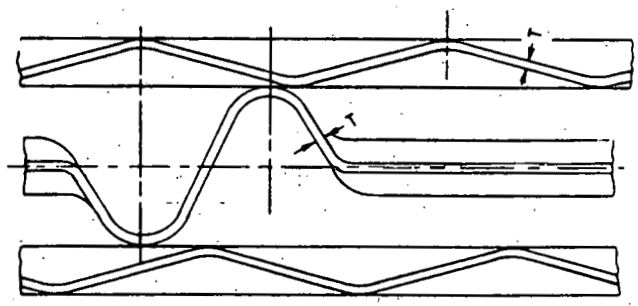

b) Section A-A

Figure 4 - 16 Type KH8 Regenerative Surface

a 12" deep section of KH10 surface (see Figure 4-17). As can be seen from the two figures, the H8 type surface at the hot end has a more

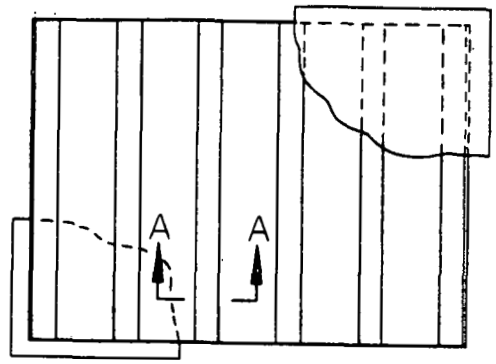

a) Side View

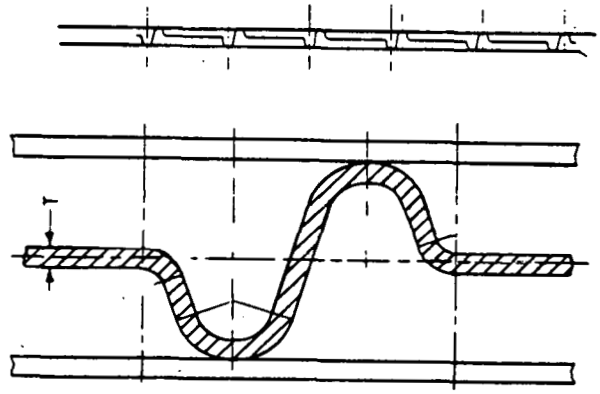

b) Section A-A

Figure 4 - 17 Type KH10 Regenerative Surface

intricate pattern and is made of a lighter gauge metal than the KH10 surface. This is because the H8 type is desired to have a more effc-tive heat transfer coefficient, while the KH10 type at the cold end is designed for better corrosion resistance and easier cleanability.

Between the hot and cold surfaces, 22" will be left open for the possible addition of contingency surface, allowing for a maximum surface depth of 60 inches.

Hot gas and cold air are alternately passed through the surface

every 15 seconds, using dampers to control the flow. This cycle time is representative of that experienced on a large scale regenerative air heater. To keep a steady load on the forced draft fan and electric air heater, there is a 10" I.D. bypass pipe provided to vent the air when gas is passing through the air heater.

Sootblowers are provided above the hot end and below the cold end to remove surface deposits (see Section 4.9.10, Sootblowers, for more detail). Access to the surface is gained by removing one side of the metal casing.

Operating conditions involve a gas flow of 6,000 lb/hr with inlet and outlet temperatures of 823F and 331F respectively. Gas side pressure drop across the test section is 1.70 in. wg. 6,000 lb/hr of air is preheated to 125F by electric air heaters before entering the test air heater. The air leaving the unit is 670F. Air side pressure drop is expected to be 0.67 in. wg.

4.7. Electrostatic Precipitator

The flue gases leaving the economizer and the low temperature air heaters enter the precipitator. The electrostatic precipitator for this project is a B&W Rothemuhle design. Rothemuhle precipitators are arranged to pass flue gases horizontally through a series of fields containing alternating parallel lanes of discharge frames and collecting curtains. An electrical field exists between the negative discharge frames and the grounded (positive) collecting curtains. The flue gas is ionized and the ions adhere to the dust particles carried by the gases. The charged dust particles are then attracted to the positive collecting surfaces. Rapping devices periodically strike the base of each

collecting plate curtain and dislodge the dust particles which then fall to the collection hoppers underneath the precipitator.

The B&W/Rothemuhle method of sizing precipitators uses a comparison basis whereby operating precipitator conditions are used and corrections are made for the differences between the operating unit and the new design conditions. Due to the lack of experience on the combination of coal fly ash and high concentrations of potassium compounds in the MHD process, a search was made for an application or combination of applications which were similar to this new process. A black liquor recovery boiler application and a high sulphur coal application were selected to be combined for the basis of comparison. The black liquor application has demonstrated that sodium compounds can be collected in a precipitator. Both sodium and potassium are collected in an electrostatic precipitator with similar collecting qualities. The high sulphur coal and fly ash are very similar to the design Illinois coal.

The following two tables summarize the design basis for sizing the 20 MWt Unit electrostatic precipitator. Table 4-1 lists the conditions used for the comparison mentioned above. The combined conditions of the operating precipitator were formed by combining actual data from black liquor and high sulfur coal units. The expected conditions for the 20 MWt precipitator are from the heat and material balance for this system contained in Section 6.3.10. of the Conceptual System Design Description Report, Report No. BW10018-TR-1. The efficiency of 99.0% refers to the removal of 99.0% of the solids entering the precipitator. When the precipitator was designed, it was expected that 39,399 lb/hr of gas and 78 lb/hr of solids (54% seed, 46% ash) would enter the precipitator.

Table 4-1 Listing of Precipitator Conditions for Comparison

Combined Conditions of the Operating Precipitator		Expected Conditions for The 20 MWt Precipitator	
Particulate:		Particulate:	
Na_2SO_4	27.2%	K_2SO_4	48.7%
Na_2CO_3	1.4	K_2CO_3	2.6
Ash	71.4	K_2S	2.6
		Ash	46.1
Moisture	17.0% by volume	Moisture	9.0% by volume
Gas Temp.	309F	Gas Temp.	330F
Inlet Dust	6.15 gr/SCF	Inlet Dust	0.725 gr/SCF
Outlet Dust	.037 gr/ACF	Outlet Dust	0.0072 gr/ACF
Efficiency	99.4%	Efficiency	99.0%
Migration Velocity	9.08 cm/sec		

Based on these comparisons, correction factors were made to account for the differences between the combined operating unit conditions and the 20 MWt Unit expected conditions. Table 4-2 lists these correction factors, which are applied to the operating unit migration velocity to obtain a value for migration velocity for the 20 MWt precipitator. Migration Velocity is defined as the rate at which the charged dust particles move toward the collecting plate.

Table 4-2 Correction Factors Applied to the Operating Precipitator Migration Velocity

Precipitator Condition	Correction* Factor
Moisture in Flue Gas	-major
Gas Temperature	-minor
Inlet Dust Loading	-small
Outlet Dust Loading	-major
Efficiency	+small
Particle Size	-major
Ash Composition	+minor
Pilot Scale Factor	+major
Risk Factor	-small

* Minor correction (0 - 5%)
Small correction (5 - 10%)
Major correction (10 - 20%)

The plus corrections are those that improve precipitator performance and the minus corrections are those that make particle collection more different.

By applying the corrective factors above to the operating unit migration velocity of 9.08 cm/sec, the resulting migration velocity for the HRSR precipitator is 5.6 cm/sec. This migration velocity was then used to calculate the required surface area, using an empirically derived relationship between collection efficiency, collection surface area, flue gas volume, and migration velocity. The average size of the particles was assumed to be 0.5 micron, based on the best experimental information available. The selected size of 5,425 sq. ft. of surface results in an effective migration velocity of 5.41 cm/sec.

Once the collector surface area was determined, the mechanical and electrical design of the precipitator could be completed. The basic physical arrangement of the precipitator is shown in Figure 4-18. This

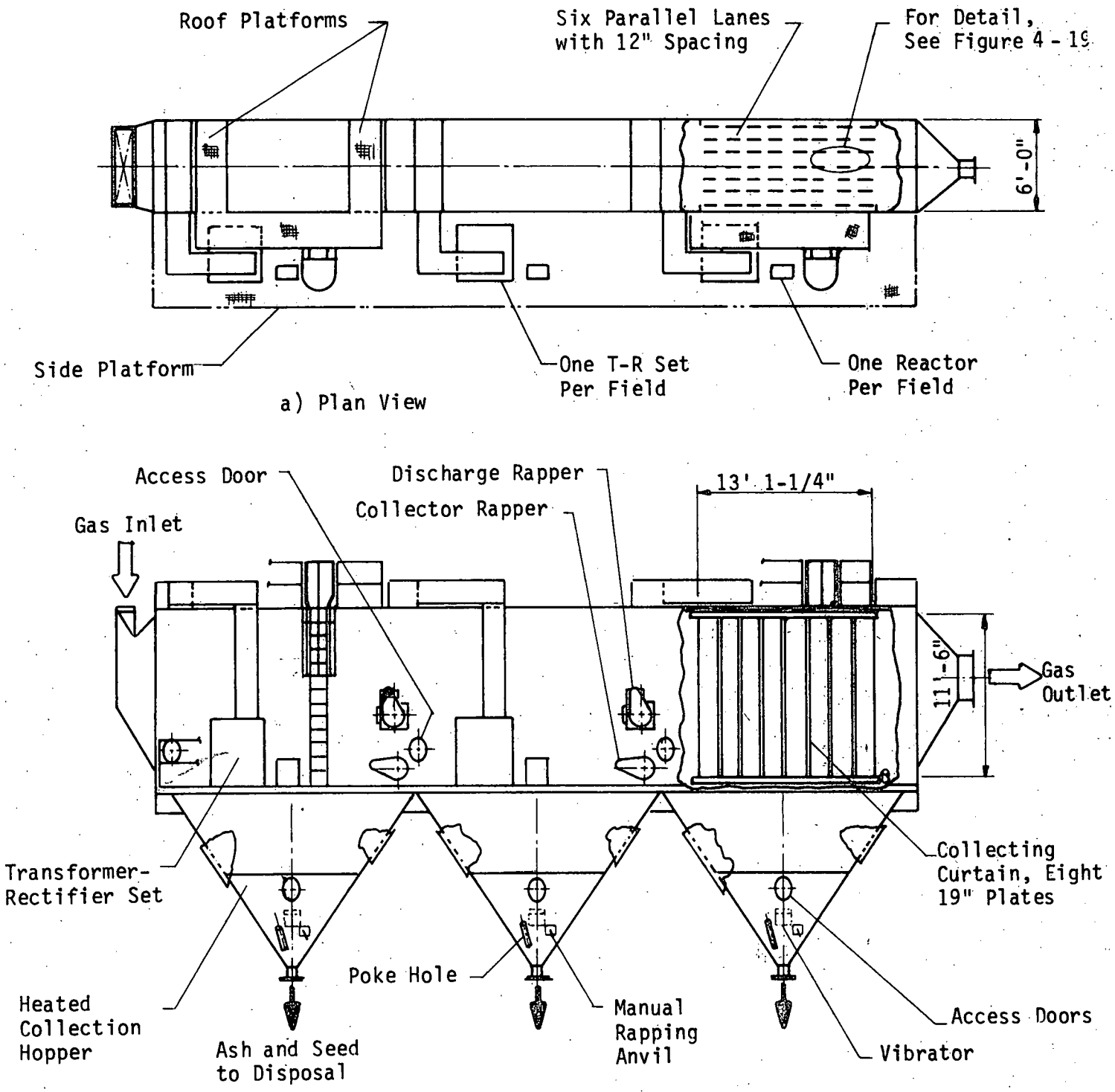

Figure 4-18 Electrostatic Precipitator

arrangement has three collection fields, with each field being both mechanically and electrically independent. The aspect ratio (total field depth/field height) has been selected so that the residence time of the flue gas in the precipitator is similar to that of a large size precipitator . The 12" lane spacing also duplicates that of a larger unit.

The transformer-rectifier (T-R) sets were conservatively sized to give 50 microamps/sq. ft. of surface. This size will allow adequate flexibility to vary the power input as desired. Further details on the T-R sets are provided later in this section.

Because of the small particle size expected the gas velocity in the precipitator was set at about 3.0 ft/sec. This value is lower than the gas velocity in a typical large size precipitator to reduce the effect of re-entrainment.

Each lane has a discharge frame in the center flanked by a collecting curtain on each side, as shown below in Figure 4-19.

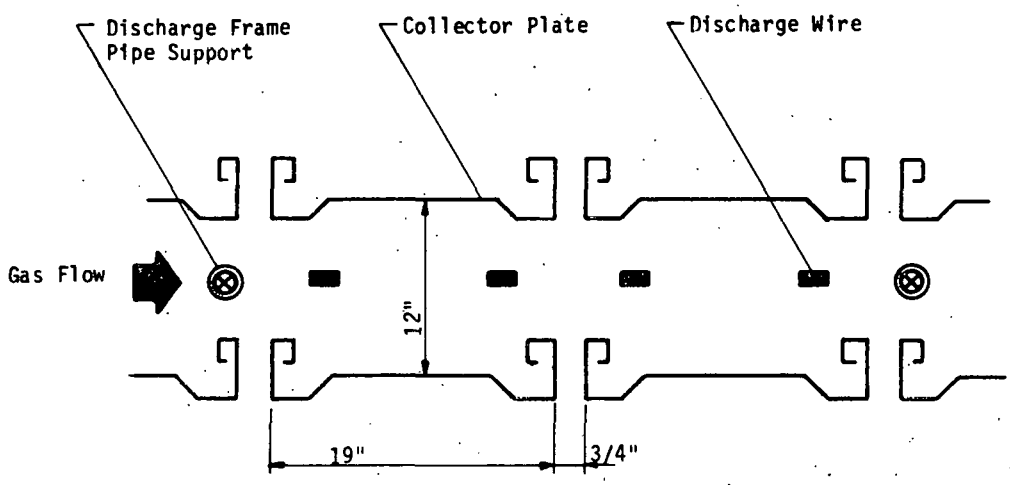

Figure 4-19 Precipitator Gas Lane Detail

Each discharge frame consists of discharge wire electrodes evenly spaced in a rigid pipe support structure. Each collecting curtain consists of eight 19" plates. These plates incorporate a number of grooves and recesses which are designed to form flow shadows to enhance collecting properties and minimize dust re-entrainment. The plates feature high frequency vibration characteristics which aid in adequate cleaning performance. Each plate is rigidly connected at the top and bottom to assure maximum transmission of rapping forces.

The eight collecting plates give a field depth of 13'-1/4", with the field height then specified as 11'-6". This provides 1808 sq. ft. of collecting surface per field, for a grand total of 5,425 sq. ft.

Rapping devices are of the hammer and anvil type. Rappers are mounted on slowly rotating shafts across the width of the unit, and staggered so that each collecting curtain and discharge frame are rapped independently. The staggered rapping sequence reduces re-entrainment to produce a lower continuous opacity for a given outlet dust loading.

The Rothemuhle precipitator consists of a shell casing reinforced to withstand positive and negative gas pressures and to maintain a gas tight enclosure. Design pressures for this unit are $\pm$ 15 in. wg. continuous and $\pm$ 60 in. wg. transient. The transient design pressure is this large because of the vacuum-pulling potential of the existing I.D. fan at the site. Inlet and outlet flanges are provided for attachment of flue transition sections. Air tests will be performed to find the optimum angle for the inlet nozzle. Proper gas distribution is accomplished by means of perforated plates placed in series at the inlet.

The self-supporting shell casing consists of plates reinforced by

stiffeners of standard rolled sections welded together. Roof support beams are designed as hollow box girders and carry the loads of all internal equipment. The precipitator structure rests on special sliding bearings which allow movement due to thermal expansion. A sufficient number of access doors is provided for maintenance and inspection purposes. Hoppers are provided under the precipitators for collection and disposal of dust removed from the gas stream. Each hopper has a vibrator, heater, poke hole, and manual rapping anvil to facilitate solids removal.

Each precipitator field is equipped with its own high voltage transformer and silicon rectifier set which steps line voltage up and provides unfiltered negative direct current to the electrodes. The minimum requirements for this equipment are listed below in Table 4-3.

Table 4-3 Minimum Requirements of Electrical Equipment for the Precipitator

1.	General	
	a. Primary Voltage	480 A.C.
	b. Phase	Single Phase
	c. Frequency	60 Hertz
	d. Altitude	1,000 feet
	e. Number of Power Supplies	3
2.	Transformer-Rectifier Sets	
	a. Secondary Voltage (average D.C.) Based on Resistive Load	See Special Accessories, #2
	b. Secondary Current (average D.C.) Based on Resistive Load	100 milliamperes

Table 4-3 (continued)

c.	Voltage Form Factor	1.19
d.	Current Form Factor	1.2
e.	Cooling Means	Ambient Air
f.	Insulating Fluid	Mineral Oil
g.	Temperature Rise	55C
h.	Ambient Temperature	40C Ave., 50C Max.
i.	Environment	Outdoors
j.	Wave Form	Full
k.	H.V. Bushing Location	Top

l. Standard Accessories

1) Tank-mounted temperature indicator

2) Tank-mounted level indicator

3) Drain and sample valves

4) High voltage grounding switch with provisions for Kirk or Superior key interlocks.

5) High voltage bus duct connection provisions

6) Surge arrestor for protection of metering circuit

m. Special Accessories

1) TR high temperature switch

2) Tapped primary on TR set to allow varying primary voltage at 440F, 480 V (normal) and 520 V to produce secondary voltage of 50, 55, and 60 KV D.C.

3) Separately mounted reactor mounted in NEMA 3R cabinet, to provide impedance at 50%.

As seen in Figure 4-18, the TR sets are located at the side of the precipitator. Normally, these sets are placed on top of the precipitator. However, by leaving the top clear of electrical equipment it will be possible to make some changes and adjustments to the collecting surface if deemed necessary.

The control system components are housed in a separate control cabinet. To provide maximum collection efficiency, the controls integrate the precipitator voltage upward to the threshold of sparking. As sparking develops, the controls modulate backwards to quench arcs and return to threshold. The electric field strength of the transformer-rectifier is rated at 55KV. Sparking is not expected to occur for up to 50KV. Spark, quench and recovery rates can be adjusted to match precipitator load conditions. Also, the three fields can be individually adjusted or shutdown to examine the different effects on outlet dust loading.

The specifications for the transformer-rectifier controls are given in Table 4-4.

During full load operation, 39,399 lb/hr of flue gas enter the electrostatic precipitator at 329F. This gas flowrate corresponds to approximately 12,450 CFM volume flowrate. The inlet dust loading is about 94 lb/hr of ash and seed. The gas passes through the precipitator with an average velocity of 3.0 ft/sec, and an effective migration velocity of 5.41 cm/sec. With a collection efficiency of 99%, the outlet dust loading is approximately 0.95 lb/hr. Solids removed include 35 lb/hr of ash and 58 lb/hr of seed.

Table 4-4 Specifications for the Transformer-Rectifier Controls

a. NEMA Rating: 12

b. Environment: Indoor

c. Ambient Temperature: 40C

d. Standard Accessories

1) Provisions for Kirk or Superior key interlocks

2) SCR type automatic control

3) Manual control capability

4) Separate circuit breaker (22,000 amp. I.C.)

5) Meters

a) Primary amps

b) Primary volts

c) Secondary milliamps

d) Secondary kilovolts

6) Undervoltage and overvoltage protection

e. Standard Options

1) Spark rate indicator

2) Main contactor

f. Special Requirements

1) Controls to be compatible with special requirements for tapped primary on T-R and tapped reactor as specified previously in special accessories.

2) Controls to be able to adjust secondary current from 0 to 100 mA.

4.8. Ash and seed Handling Equipment

As the flue gases pass from the furnace through to the precipitator outlet, solids form in the gas stream and drop out of the system at various locations. Openings are provided at the bottom of the gas side enclosure through which slag, spent seed and fly ash fall and collect in hoppers below the openings. These solids are then transported to the local disposal area by the ash and seed handling equipment.

For the HRSR unit, both wet and dry ash handling systems will be used. In addition to disposing of waste solids, each system is also designed to quantitatively and qualitatively sample the solids leaving the individual gas side openings. Following is a brief discussion of the design decisions and major equipment specified for the wet and dry systems.

4.8.1. Wet Ash Handling System

A wet disposal system is required under the furnace to handle the high temperature molten slag effluent. With a wet system, care must be taken when sampling to detect any water soluble compounds that may fall out of the furnace with the slag. Thus, for reasons given below, a submerged drag chain type wet ash handler is specified rather than a typical water impounded slag tank.

The basic difference between these two wet ash handlers is their method of transporting the collected solids. A typical slag tank set-up grinds up the frozen slag and transports it to disposal by means of an inductor which operates with a high volume of high velocity water to sluice the slag to disposal. A system of this type was sized for the HRSR unit and required about 950 gpm of injection water to remove the

solids. With an expected solids dropout from the furnace of less than 100 lb/hr, the injection water would severely dilute the mixture of solids and water coming from the slag tank. Thus accurate sampling of solids flowrates and water soluble compounds would prove extremely difficult.

The drag chain ash handler avoids this problem by removing the solids mechanically rather than hydraulically. After quenching and cooling in the wet collecting tank, the slag deposits are dragged by conveyor out of the water tank on a long incline. This allows most surface moisture to drain back into the water tank. The dewatered slag is then dumped into a receiving tank for weighing, sampling, and removal from the site. The dewatered slag still contains about 25% of its original moisture; the slag may be weighed assuming a certain moisture content or dried first. Water soluble compounds will essentially remain in the collecting tank, as the tank water is cooled by a closed loop heat exchanger system. Periodic analysis of the tank water will provide information about the amount and type of compounds going into solution.

Following is a brief description of the major pieces of equipment on the submerged drag chain ash handler. The wet collecting tank is about three feet wide and covers the entire length of the furnace hopper (see Figure 4-20). A transition chute with water seals provides a gas tight enclosure from the boiler down to the collecting tank. A variable speed drag chain conveyor runs through the tank, up the inclined dewatering section on the left side of the HRSR furnace, and back under the collecting tank. The closed loop cooling system has a surge tank to collect overflow water, a circulating pump and a flat plate, water to water heat exchanger. The heat exchanger is sized to keep the water in the collecting

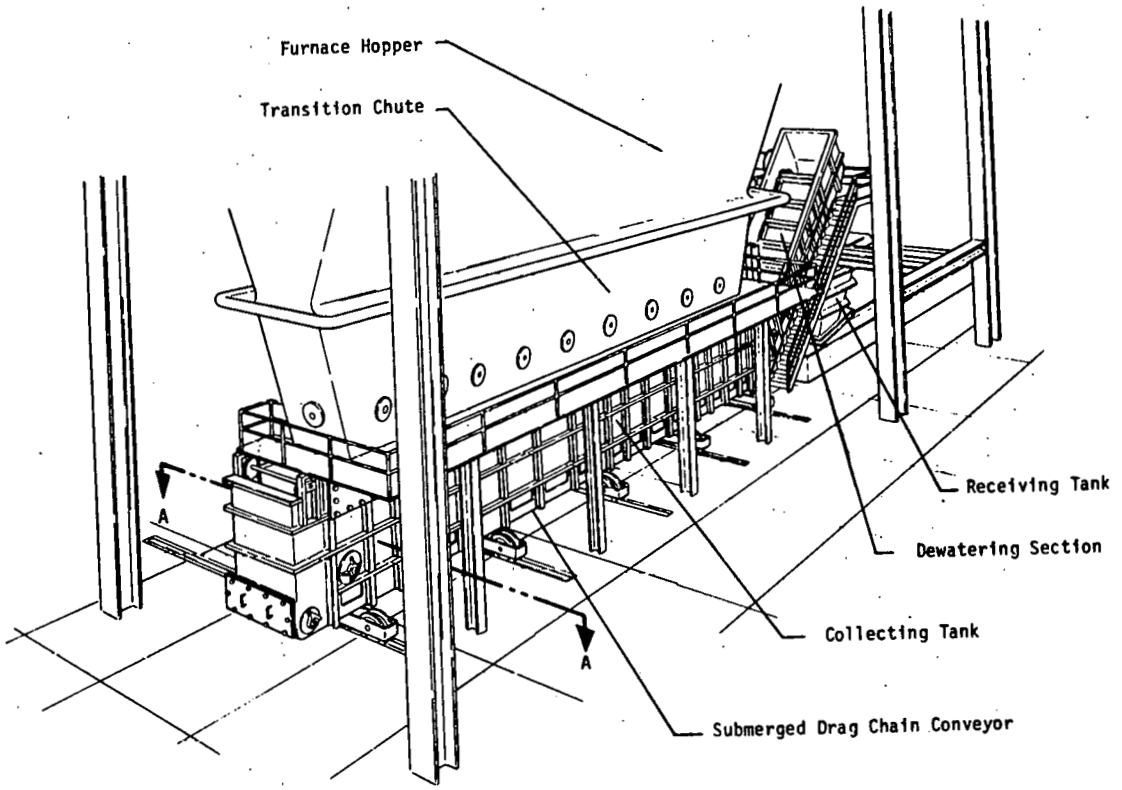

a) Three Dimensional View

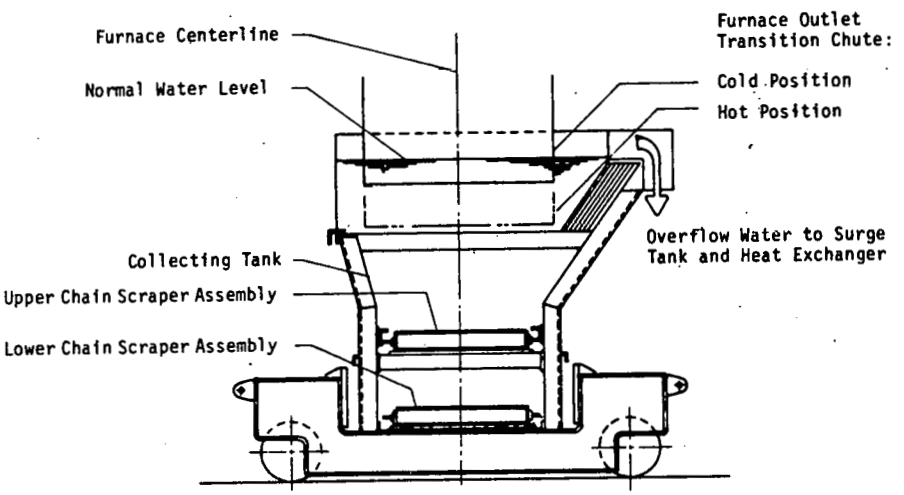

b) Section A-A

Figure 4-20 Submerged Drag Chain Ash Handler

tank at about 125F. Solids carried by the chain conveyor are dropped into a receiving tank, where weight measurements and samples will be taken periodically.

Initially, the drag chain will be operated once every few hours. After an appreciable amount of solids have collected, the drag chain will clean out the tank in a few minutes and then shut down until the next cycle. Some make-up water will be required due to evaporative losses to the furnace and water carried off with the removed slag.

4.8.2. Dry Ash Handling System

A dry ash handling system will be used to collect solids dropout from all locations except the furnace. A vacuum system will be employed to pull the solids from individual collection hoppers with suction air and transport it through pipes to disposal. With the gas side operating under negative pressure, a vacuum type system prevents air from leaking into the boiler enclosure while the deposits are being removed.

The dry collection method is much more conducive to sampling and weighing solids than the wet system, particularly since large amounts of water soluble potassium compounds are expected to be formed by the HRSR unit. A sampling station will be linked in parallel with the disposal system to permit periodic sampling and weighing of the solids coming from each individual collection point.

The major equipment for the dry ash disposal system consists of collection hoppers under each opening in the gas enclosure, transport piping, and several pneumatically controlled valves. The vacuum producer will be supplied by UTSI. Also, a clinker grinder will be placed at the outlet of the secondary superheater collection hopper to reduce

any large chunks of material to a size transportable by the vacuum system. The capacity of the SSH collection hopper is larger than the others to accommodate the heavy seed dropout expected.

Collection hoppers are constructed of 1/4 inch thick carbon steel plate. For the hoppers provided under the secondary superheater, intermediate temperature air heater (hot and cold pass) and primary superheater, water seal troughs are provided to permit expansion. Each of these hoppers are supported from below on structural steel columns.

The hoppers provided under the regenerative air heater (total of 1), the tubular air heater (total of 1), the economizer (total of 2) and the precipitator (total of 3) are each supported directly from the equipment.

The dry sampling system consists of a bag filter to separate the solids from the transport air stream, and a receiving hopper underneath to weigh and sample the solids. The receiving hopper will also be connected to the vacuum system to dispose of the solids after sampling is completed.

The collection hoppers have an eight hour holding capacity. Each hopper will be emptied separately. The entire emptying process should last about half an hour. When sampling, more time will be required.

4.9. Auxiliary Equipment

This segment briefly describes the functions, design conditions and specifications for 12 types of auxiliary equipment. Most of the equipment is commercially available, thus some of the specific information will depend on which vendor ultimately supplies a particular piece of

equipment. However, enough information has been provided to obtain a good understanding of what each piece of equipment does and what its impact is on the total system.

4.9.1. Attemperators

Spray attemperators are used to reduce the temperature of superheated steam by injecting water into the steam line. By lowering steam temperature the metal temperatures downstream of the attemperators are also lowered. This reduces the piping requirements of the steam lines and the steam condenser.

Three attemperators are specified in the HRSR System. Two are located in the superheated steam lines after the secondary superheater and intermediate temperature air heater. The other attemperator is located in the condenser collecting header. All attemperators consist of a spray nozzle with a sleeve to protect the piping from thermal shock.

The design requirements and full load operating conditions for the secondary superheater and ITAH spray attemperators are given in Table 4-5 and Table 4-6.

Table 4-5 Attemperator Design Requirements - Secondary Superheater

		Design Requirements	Full Load Conditions
1.	Attemperator Body Design		
	a) Pressure, psig	2950	-
	b) Temperature, F.	1025	-
2.	Spray Water Flow to Attemperator, lb/hr	1621	1053
3.	Spray Water Enthalpy to Attemperator, Btu/lb	224	224
4.	Steam Enthalpy Entering Attemperator, Btu/lb	1496	1496
5.	Steam Flow Leaving Attemperator, lb/hr	13210	8598
6.	Steam Pressure at Attemperator Outlet, psig	1300	1300
7.	Steam Temperature at Attemperator Outlet, F	750	750

Table 4-6 Attemperator Design Requirements — Intermediate Temperature Air Heater

		Design Requirements	Full Load Conditions
1.	Attemperator Body Design		
	a) Pressure, psig	250	-
	b) Temperature, F	1200	-
2.	Spray Water Flow to Attemperator, lb/hr	3426	2349
3.	Spray Water Enthalpy to Attemperator, Btu/lb	224	224
4.	Steam Enthalpy Entering Attemperator, Btu/lb	1638	1638
5.	Steam Flow Leaving Attemperator, lb/hr	13420	9207
6.	Steam Pressure at Attemperator Outlet, psig	120	110
7.	Steam Temperature at Attemperator Outlet, F	500	500

A standard B&W spray nozzle located in the condenser collecting heater will be used as the third attemperating device. The nozzle receives 7630 lb/hr of 140 psig water from the flash tank.

4.9.2. Blowdown Tank

To control solids concentrations in the boiler circulating water, water with dissolved solids in it is removed from the steam drum and replaced with low solids make-up water. The boiler blowdown tank will be used to collect, cool, drain and vent blowdown water.

As the saturated drum water is depressurized, it flashes into a steam-water mixture. The blowdown tank separates the two and sends the steam up to the atmosphere through a 10" diameter vent stack. The high temperature water is cooled by the addition of low temperature water and then discharged to a sewer line.

The blowdown tank is sized to handle 600 lb/min for approximately a five minute period, which results in 3000 lb. of water per blowdown. The resulting tank size is 6' in diameter by 9' in height.

For this project, the quantity of water removed to control dissolved solids buildup is small enough to warrant manual intermittent rather than automatic continuous blowdown. Periodic water analyses of the drum water will be performed to determine the quantity of dissolved solids in it. If the quantity is too high, the blowdown will be activated.

Also, the boiler drains that empty the enclosure wall cooling circuit and the sootblower line warming steam are routed to the blowdown tank for disposal.

Table 4-7 describes the design requirements for the blowdown tank.

4.9.3. Chemical Feed Injection Equipment

A boiler chemical feed injection system will be used to treat boiler feedwater. Three feed systems are specified: hydrazine, ammonia, and phosphate.

The hydrazine feed system will be used to neutralize trace acids formed in the condensate, as well as to scavenge oxygen. Hydrazine will be injected into the feedwater upstream of the boiler feedwater pump.

Table 4-7 Blowdown Tank Design Requirements

ITEM	REQUIREMENT
Design Temperature	693F
Design Pressure	800 psig
Design Storage Capacity	1300 gallons
Maximum O.D.	6 ft. - 0 in.
Maximum Height (without legs)	9 ft. - 0 in.
Tank Type	Vertical
Operating Temperature	212F
Operating Pressure	2 psig
Tank Location	Outdoors
Contained Fluid	Boiler Blowdown and Miscellaneous drains
Roof Live Load	20 psf
Design Code	ASME Section VIII
Nozzles:	
Blowdown inlet	one
Vent	one
Boiler Drains	three
Outlet	one
Drain	one
Cooling Water Inlet	one
Manhole	one

The feed system consists of a separate measuring tank, solution holding tank, two metering (injection) pumps complete with individual motors and automatic stroke adjustment controls, piping, valving, wiring and a motor driven mixer. Only one injection pump will be operated at a time, leaving the other pump as a back-up.

The ammonia feed system will be used to maintain a pH in the range of 8.8 to 9.2 in the boiler drum. Ammonia will be injected into the feedwater upstream of the boiler feedwater pump. The ammonia system consists of equipment similar to the hydrazine system mentioned above.

The phosphate feed system will be used to combat water hardness. Trisodium phosphate will be injected into the boiler steam drum for this purpose. The phosphate system also consists of equipment similar to the hydrazine system, except a dissolving basket placed directly in the solution tank replaces the measuring tank.

The design requirements for the chemical measuring tanks, solution tanks, and injection pumps are listed in Table 4-8.

Table 4-8 Design Requirements for the Chemical Feed System Equipment

1. Chemical Measuring Tanks

	Ammonia	Hydrazine	Phosphate
Number Required	One	One	-
Minimum Capacity, gallons	10	7.5	-
Percent Solution Strength	28	35	-
Specific Gravity of Solution	.896	1.025	-
Minimum Tank Thickness, inch	1/8	1/8	-
Tank Materials of Construction	304SS	304SS	-
Tank Cover, type	Hinged	Hinged	-
Tank Bottom, type	Dished	Dished	-
Method of Drainage	Gravity	Gravity	-
Method of Fill	Funnel	Funnel	-
Overflow Connection	Yes	Yes	-
Drain Connection	Valved	Valved	-
Gauge Glass (graduated)	Yes	Yes	-

2. Chemical Solution Tanks

Number Required	One	One	One
Minimum Capacity, gallons	50	50	50
Percent Solution Strength	5	5	5

	Ammonia	Hydrazine	Phosphate
Minimum Tank Thickness, inch	1/8	1/8	1/8
Tank Materials of Construction	304SS	304SS	304SS
Tank Cover, Type	Bolted & Gasketed	Bolted & Gasketed	Hinged
Tank Bottom, type	Dished	Dished	Dished
Method of Drainage	Gravity	Gravity	Gravity
Method of Fill	Valved Funnel	Valved Funnel	Valved Funnel
Drain Connection	Valved	Valved	Valved
Discharge Connections	Valved	Valved	Valved
Overflow Connection	Yes	Yes	Yes
Gauge Glass (graduated)	Yes	Yes	Yes
Measuring Tank Feed Connection	Yes	Yes	-
Low Level Alarm Switch	Yes	Yes	Yes
Dissolving Basket	No	No	Yes
Tank Mixer, type required	Electric Driven Propeller	Electric Driven Propeller	Electric Driven Propeller
Tank Vent	Atmos-pheric	Atmos-pheric	Atmos-pheric

3. Chemical Injection Pumps

Number Required	Two	Two	Two
Pump Capacity, gph	2.5	2.5	2.5
Percent Solution Strength	5	5	5

	Ammonia	Hydrazine	Phosphate
Minimum Pump Discharge Head, psig	150	150	3,250
Type	Simplex, positive displacement, diaphragm, controlled volume		
Material of Construction	Steel with Type 316 SS Liquid End and Trim, Telfon Diaphragm		
Relief Valves	Yes	Yes	Yes
Relief Valve Settings, psig	165	165	3575
Pump and Motor Design	Suitable for Relief Valve Setting Pressure		
Check Valves	Double ball or cone type suction and discharge with rupture disc, or relief valve		
Stroke	Remotely adjustable while running 0 to maximum capacity		
Mounting	Pump, motor drive and reduction gears mounted on a suitable steel base and coupled in true alignment		

Each feed injection system is designed to meet the applicable HRSR design conditions listed below in Table 4-9.

Table 4-9 HRSR Design Conditions for the Chemical Feed System

1.	Maximum Feedwater Flow	160 gpm
2.	Temperature at Feedpump Suction Nozzle	250F
3.	Pressure at Feedpump Suction Nozzle (design)	244 ft.
4.	Temperature in Boiler Steam Drum	700F
5.	Pressure in Boiler Steam Drum	2950 psig
6.	Feedwater Operating pH Range	8.8 to 9.2
7.	Maximum Specific Conductivity @ pH 9.2	3.0 mmho
8.	Maximum Ammonia as NH_3 @ pH 9.2	490 ppb
9.	Maximum Hydrazine as N_2H_4	100 ppb

4.9.4. Condenser/Subcooler

The purpose of the air-cooled steam condenser and condensate subcooler is to provide for the release of heat from the HRSR system to the atmosphere. Steam generated by a number of different paths in the HRSR system will be directed to a steam collecting header and exhausted to the air-cooled steam condenser. A condensate receiver tank or surge tank will then collect the condensate from the air-cooled steam condenser. The condensate then drains by gravity to the air-cooled condensate subcooler section. Figure 4-21 shows the overall arrangement of this equipment. The boiler feed pump will take suction from the subcooler discharge manifold.

Table 4-10 below lists the design conditions for this heat rejec-

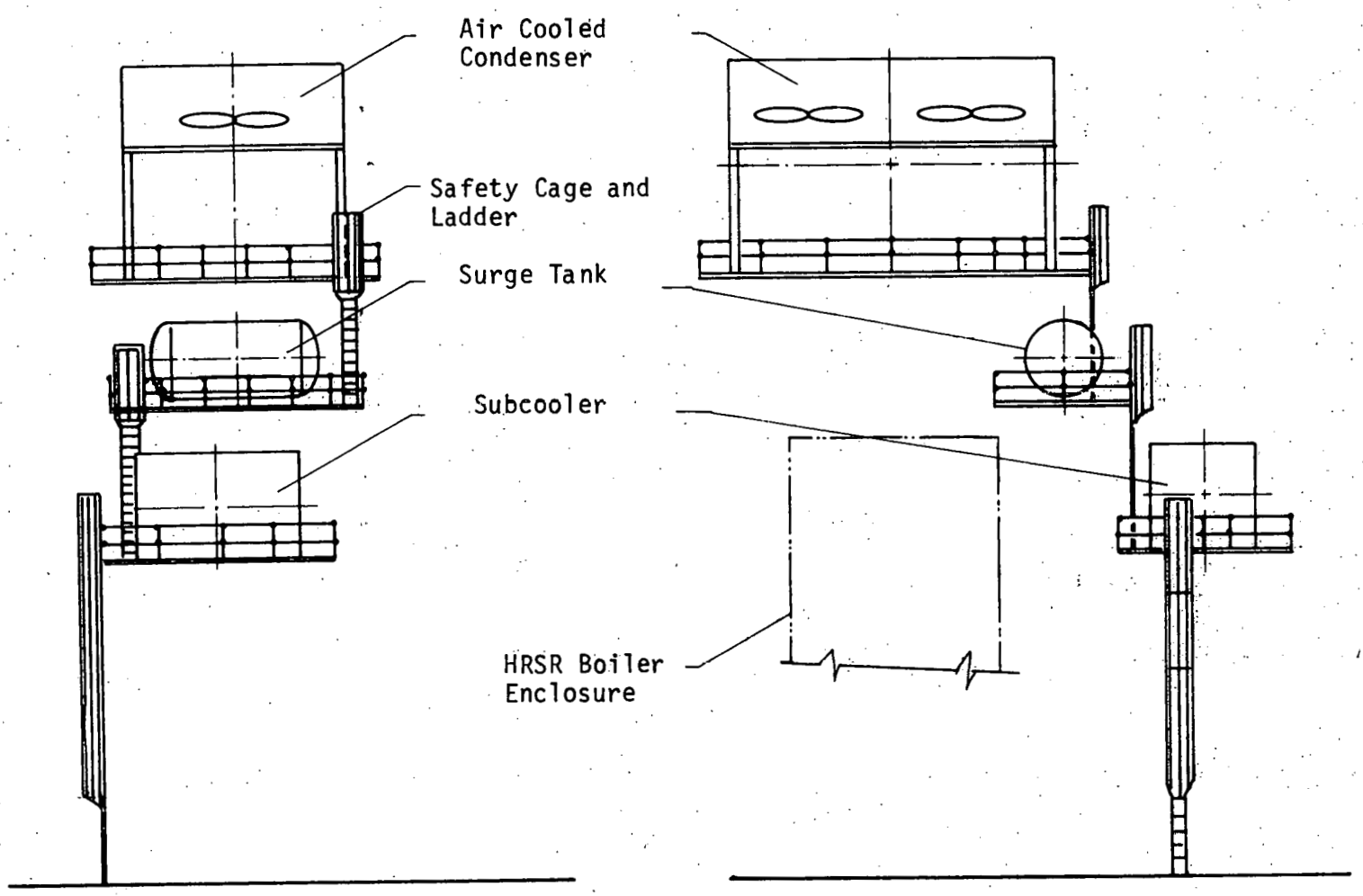

Figure 4-21 Heat Rejection Equipment Arrangement

Table 4-10 Design Conditions for Condenser/ Subcooler Equipment

1. General

a. Plant elevation, feet above sea level	1000
b. Site mean wind speed, miles per hour	7.5
c. Ambient temperature, degrees F	
Minimum	17
Maximum	99
d. Internal fouling resistances, ft^2	
Steam side	0.0005
Condensate Side	0.0005

2. Specific

	Case A (Design Point)	Case B (70% Load Conditions)
a. Steam Condensing Section		
1) Inlet exhaust steam flow, lb/hr	58,200	38,900
2) Entering steam quality, %	94.6	92.5
3) Entering steam enthalpy, Btu/hr	1,141.1	1,122.6
4) Condensing pressure,	100	100
b. Condensate Subcooler Section		
1) Discharge pressure, psig	95	95
2) Discharge temperature, degrees F	250	250
3) Discharge flow, lb/hr	70,000	38,900
c. Design Ambient Temperature, degrees F	99	17

tion equipment. The probability of ambient temperature for a given day falling in the design temperature range (17F to 99F) is 97.5%. Designing the condenser/subcooler system based on the historic high ambient temperature for the site is not economically advantageous. Operating at lower than 17F poses no problems as long as adequate freeze-up protection is provided. The air-cooled condenser, subcooler and auxiliaries will be designed in accordance with the conditions specified under Case A, the design point. In addition, the condenser will be capable of operating with steam flow conditions at 70% load, as specified under Case B. The latter case represents the maximum anticipated turndown of the system.

The inlet flow design specification of 70,000 lb/hr to the subcooler is adequate for a reciprocating boiler feed pump. This flow is 11,800 lb/hr greater than the steam condenser inlet design flow to allow for the addition of circulating pump seal water and make-up water inputs to the surge tank.

The condenser/subcooler system will be capable of withstanding pressures up to 200 psig at a maximum temperature of 650F. This provides a safety margin and a design contingency should operations at pressures greater than 100 psig be desired in order to increase the cooling capacity of the condenser.

Provisions will be made to protect the system from freeze-up in cold weather during periods of start up, shutdown and standby. Staggerly spaced finned tubes are employed in the tube bundle construction.

Control of the condenser/subcooler system is accomplished by automatic variable pitch fans that regulate the air flow over the tube bundles. The set points are 100 psig pressure in the condenser and 250F condensate discharge temperature from the subcooler. Wind screens

will be furnished to minimize wind and recirculation of exhaust air, in cold weather, the pitch angle can be automatically reversed to retard or stop the convective flow of air.

During full load operation, 55,158 lb/hr of a 91% quality steam-water mixture enters the air-cooled steam condenser. The condenser rejects 44.6 x 10^6 Btu/hr of heat to the atmosphere and sends saturated water to the surge tank. Water from the surge tank is combined with 12,384 lb/hr of circulating pump seal water outleakage (see Section 4.9.9., Circulating Pump) and sent to the subcooler. The subcooler rejects 5.1 x 10^6 Btu/hr of heat from 67542 lb/hr of water. This subcooled water is then discharged to the boiler feed pump at 250F, 95 psig.

4.9.5. Electric Air Heaters

Three electric air heaters are used in the HRSR system to simulate process conditions in the 300 MWt plant. One electric air heater preheats the secondary cumbustion air and thus will be used continuously during normal operation. The other two each preheat inlet air to the two test air heater sections and thus will only be operated when testing the tubular and regenerative air heaters.

The tubular and regenerative test air heaters each require an electric air heater so that inlet air temperature to each one can be varied simultaneously while testing. Heat transfer and corrosion characteristics for each test air heater may vary with inlet temperature, thus this flexibility is necessary.

Table 4-11 below describes the design requirements for the electric air heaters.

Table 4-11 Design Requirements for the Electric Air Heaters

1. Design Ambient Air Temperature

   Plus 20F

2. Air Heater Design Conditions

	Air Flowrate	Outlet Temp
a. Secondary Combustion Heater	6800 lb/hr	150F
b. Test Air Heater Section Heaters	14,400 lb/hr	125F

3. Heater Locations

   All heaters will be outdoors

4. Heater Orientation

   Secondary combustion heater will be mounted in a horizontal run of duct. Heater opening dimensions are about 24" high by 36" wide.

   Electric heater for the tubular air heater will be mounted in a vertical run of duct. Heater opening dimensions are about 30" x 33".

   Electrical heater for the regenerative air heater will be mounted in a horizontal run of duct. Heater opening dimensions are about 30" x 30".

5. Type of Heaters

   All heaters will be direct contact resistance wire or ribbon wound on insulated strips assembled in a metal frame. Standard assemblies will be coupled together in the direction of air flow to achieve the required heating capability.

Table 4-11 (Continued)

6. Controllers

   Each heater will be controlled by a panelboard mounted set point controller. The controller will be the on-off type that will "pulse" power to the heater by means of opening and closing a power contactor(s). The overshoot and undershoot will be held to the set point value plus or minus 10F.

   Controllers will have an analog readout of the air temperature leaving the heater and provide an analog signal representing this temperature.

7. Temperature Sensor Location

   Just downstream of each heater

8. Power Characteristics

   460 volts, 3 phase, 60 cycles

4.9.6. Fans - Secondary Combustor and Test Air Heaters

Two forced draft air fans are specified for the HRSR System. One fan supplies air to the secondary combustion zone of the furnace. The other fan supplies air to the tubular and regenerative test air heaters. The fan is designed to supply air to each air heater simultaneously to reduce testing time. The design requirements and full load operating conditions for each fan are listed in the following Table 4-12.

Table 4-12 Design Requirements for the Forced Draft Fans

	Design Requirements	Full Load Conditions
1. Secondary Combustor Air Fan		
a. Air Flow Rate, lb/hr	8400	6789
b. Static Difference, in. wg.	21.1	16.9
c. Air Temperature, F	105	80
2. Test Air Heater Air Fan		
a. Air Flow Rate, lb/hr	14400	12000
b. Static Difference, in. wg.	5.1	4.1
c. Air Temperature, F	105	80

Both fans will be located outdoors.

4.9.7. Flash Tank

The primary function of the flash tank is to provide the intermediate temperature air heater with low pressure steam. The ITAH needs this steam to simulate the conditions expected on a large scale ITAH.

The flash tank is supplied with a 200 psig steam and water mixture from the steam drum. This mixture is then sent through primary separators in the flash tank, which separates the steam and sends it out the top. Water falls out, producing a controllable level in the tank. Upon leaving the tank, both steam and water ultimately flow to the condenser collecting header through three different flow paths.

The flash tank design involves using curved arm primary (CAP) separators, each with a maximum capacity of 31,000 lb/hr at 200 psig

Since full load inlet flow is about 43,800 lb/hr, a twin separator arrangement is used.

The flash tank shall is vertically oriented and has a straight length of 8'-2-5/8" and a 42" I.D. (see Figure 4-22). The tank is fed by an 8" nominal inlet pipe, which passes the steam and water mixture through a perforated plate to distribute the flow. Upon entering the tank, flow is split to two identical separator systems. Each system has a 5" feedpipe and a CAP separator enclosed in a 13-1/2" I.D. sleeve.

External connections at the top of the tank provide for a 6" steam outlet, safety valve, pressure gauge for local reading and a pressure transmitter for remote reading. The connections on the side are for water level control, spaced to allow a water level fluctuation of 30". At the bottom, in addition to the inlet pipe, is a 1-1/2" water outlet connection. A drain pipe is also provided off this connection.

At full load, 43,842 lb/hr of 83% quality water enters the flash tank. 36,212 lb/hr of steam is separated, with 6,869 lb/hr going to the ITAH and the remaining 29,343 lb/hr going directly to the condenser collecting header. 7,630 lb/hr of water leaves the flash tank and goes to the spray attemperator in the condenser collecting header.

4.9.8. Pumps - Boiler Feed Pump

The boiler feed pump forms a part of the feedwater system for the HRSR. The function of the pump is to take low pressure feedwater from the condensate subcooler and pressurize it to a value just above steam drum pressure. The high pressure feedwater then travels through con-

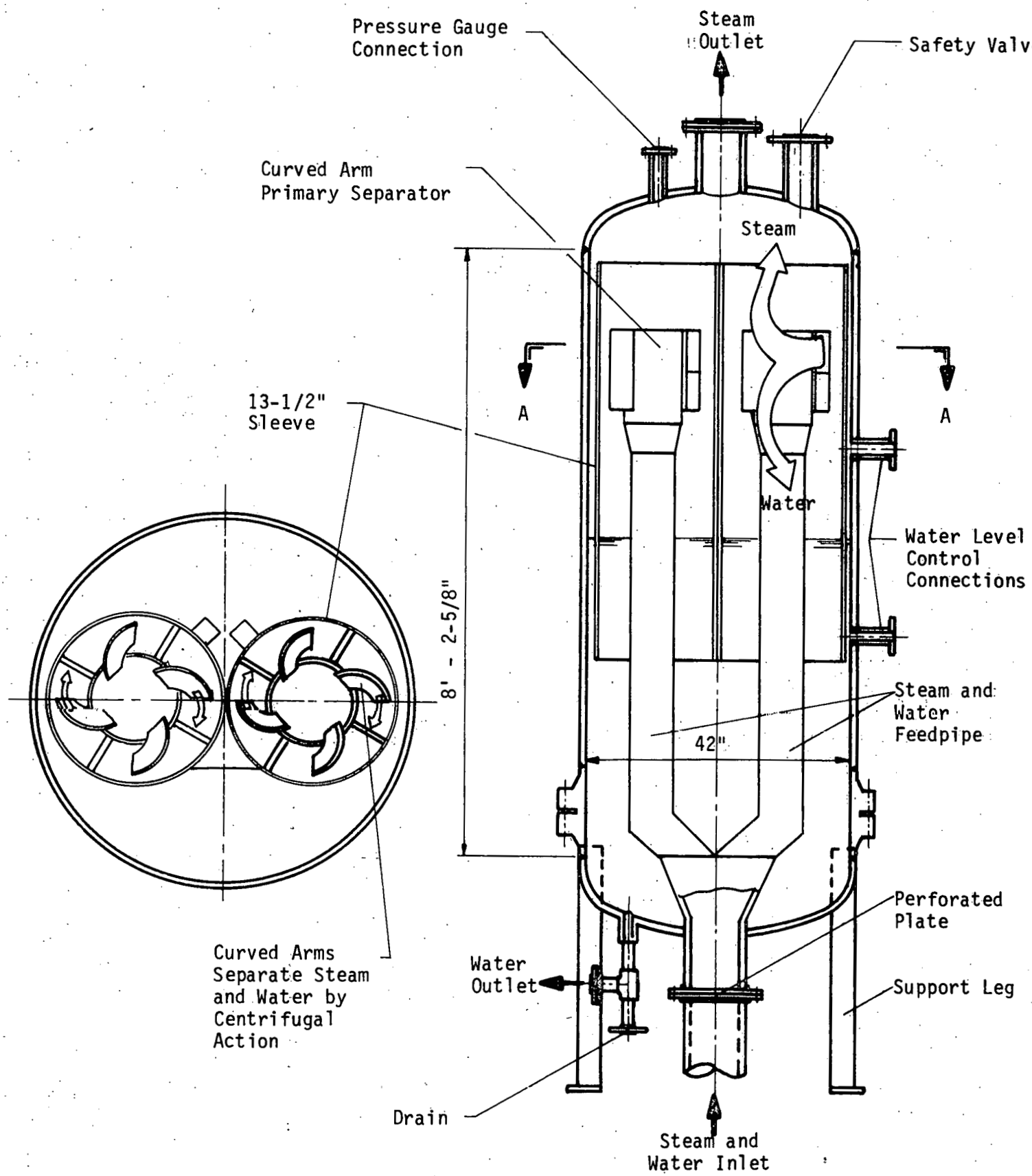

Figure 4-22 Flash Tank

necting piping to the economizer and finally to the steam drum.

The boiler feed pump will be an electrical motor driven, constant speed pump of either centrifugal or reciprocating (plunger) design. The pump design will be chosen on the basis of economic considerations. The specific design requirements for the boiler feed pump are listed below in Table 4-13.

Table 4-13 Design Requirements for the Boiler Feed Pump

1.	Design Conditions and Performance		
	a.	Pump location	Indoor
	B.	Ambient (indoor) Conditions	
		1) Pressure	14.7 psia
		2) Temperature	Normal = 55F Maximum = 100F
		3) Humidity	Maximum = 100%
	c.	Design Conditions	
		1) Capacity	160 gpm
		2) Total Discharge Head	7630 ft (3150 psig)
		3) Suction Water Temp.	250F
		4) Suction Head at Design Temp.	242 ft (100 psig)
	d.	Net Positive Suction Head (NPSH) available	210 ft (87 psia)

2. Description and Construction Features

	Centrifugal Feed Pump	Reciprocating Feed Pump
a. Discharge Design Pressure, psig	4275	4075
b. Suction Design Pressure, psig	200	200
c. Design Temperature, F	300	300
d. Discharge Nozzle O.D., in.	3.5	6.625
e. Suction Nozzle O.D., in.	3.5	8.625

3. Feedwater Analysis Limits at the Economizer Inlet

a. Total Solids	0.05 ppm
b. Dissolved Oxygen	0.007 ppm
c. Iron	0.01 ppm
d. Copper	0.005 ppm
e. Organics	0 ppm
f. Conductivity (Cation) at 77F	0.35 Micromhos
g. pH at 77F	8.8 - 9.5
h. Hydrazine (Residual)	20-30 ppb
i. Total Hardness	0

4. Cooling Water for Injection or Sealing Water Cooler (if required) and Lubricating Oil Cooler

a. Source	Facility Cooling Tower
b. Maximum Pressure	100 psig
c. Maximum Temperature	100F

As mentioned previously, either a reciprocating type or a centri-

fugal type pump will be used. The reciprocating boiler feed pump is specified to be a multiplex vertical plunger type. It will include a suitable suction side flow stabilizer and a discharge side pressure pulsation dampener. The flow stabilizer will limit flow rate variations to plus or minus 1/2% of the pump specified flow, with the attendant pressure pulsation not to exceed plus and minus 2 psi and pressure drop not to exceed 5 psi. The performance of the pulsation dampener will limit pulsations to plus and minus 50 psi, with the attendant pressure drop not to exceed 20 psi.

The reciprocating pump will be provided with a pressure relief valve for insertion in the discharge nozzle. The line from this valve will connect back to the outlet of the surge tank. Also, the reciprocating pump will be provided with automatic venting and vacuum relief valves.

The centrifugal feed pump is specified to be a single or multistage type. The design of the boiler feed pump will be either a two-piece horizontally split inner case construction or a radially split stacked diffuser construction to form an inner hydraulic passage. The design of the pump will provide for automatic venting and vacuum relief.

During full load operation, 67,542 lb/hr of feed water from the condensate subcooler enters the pump at 95 psig, 250F. Discharge pressure is approximately 2900 psig, depending on the line pressure drop, valve losses and static head between the feed pump and the steam drum.

4.9.9. Pumps - Circulating Pumps

Since this is a forced circulation boiler, circulating pumps are required to assist water flow through the enclosure wall cooling circuit. For this project, two circulating pumps will operate in parallel, each handling 50% of the flow from the drum. Two pumps are specified so that if one pump fails, the boiler will shutdown and the other pump will provide cooling water to the enclosure wall tubes.

The pumps will be centrifugal with a vertical shaft, end suction and a single tangential discharge. The pumps will have the driving motors on top and will be mounted on a horizontal suction header so the pumps and piping will move together during thermal expansions and contractions.

Table 4-14 Design Requirements for the Circulating Pumps

1.	Pump location	Outdoor
2.	Capacity of each pump	2482 gpm
3.	Water temperature	
	a. Operation	685F
	b. Start-up	60F
4.	pH level	9-10
5.	Design pressure	2950 psig
6.	Operating suction pressure	2800 psig
7.	Total developed head	75 feet
8.	NPSH available	35 feet
9.	Motor Requirements	
	a. Enclosure type	Weather protected Type two Internal Heaters
	b. Power characteristics	460 volt, 30, 60 cycle

Pump seal water will be provided at 250F from the boiler feed pump. Outleakage from the seal water will be collected at about 120 psig and returned to the surge tank (operating at 100 psig) without pumping.

During full load operation each pump handles approximately 616,000 lb/hr of slightly subcooled water at 2800 psig.

4.9.10. Sootblowers

Sootblowers function as ash and seed deposit removal devices, cleaning tube surfaces to maintain an effective level of heat transfer. All sootblowers on the HRSR System will be the Diamond Power Industrial IK-4M retractable type. Steam for sootblowing will be taken from the HRSR System just after the secondary superheater spray attemperator, at 1300 psig and 750F. Table 4-15 below lists the requirements of the sootblower system.

Table 4-15 Design Requirements for the Sootblower System

1. Cleaning Ability

   The cleaning ability of the sootblowers is based on the assumption that slagging and fouling characteristics of the ash and seed material are at least as severe as those encountered in black liquor recovery units.

2. Blowing Rate

   All IK's except the air heater straight lines will have a single nozzle sized for 4500 lb/hr. The tubular air heater straight-lines will have a rate of 640 lb/hr per nozzle. The regenerative air heater straight-lines will have a rate of 500 lb/hr per nozzle.

3. Water Tempering

Blowers in the secondary superheater will be set up to spray water during operation to handle stubborn deposits not removed by blowing with steam. Service water will be used for the water tempering, which is only provided as a stand-by method to be used if necessary.

4. Line Pressure

The 1300 psig steam supply will be reduced to 600 psig by a pressure reducing valve.

5. Cleaning Path

Sootblowing lances enter the gas stream, rotating as they travel inward and outward to provide a blowing radius of approximately 22" (except for the sootblowers in the test air heaters, which do not rotate). The lance speed of secondary superheater sootblowers will be initially set at 60 inches/minute while all others will be set at 120 inches/minute. However, any sootblower can be set at either speed, providing flexibility of operation.

6. Blowing Sequence

Blowers will initially be operated one at a time and sequenced in the direction of gas flow.

7. Wall Box Seals

The HRSR System will operate as a balanced draft unit with the ID fan controlled to produce a constant -0.5 in. wg. draft at the top of the furnace. Wall boxes must be designed for negligible inleakage to eliminate distorting the process conditions along the flow path.

8. Controls

The sootblowers will be controlled by a Diamond Custom Microprocessor which will permit complete flexibility in changing the blowing sequence as operating experience dictates. Interlocks will be provided to prevent actuation of more than one blower at a time.

The control will provide for automatic prewarming of the appropriate portion of the steam supply piping prior to actuating a blower.

9. Power Characteristics

460 volts, 3 phase, 60 cycles.

10. Blower Arrangement

a. Secondary Superheater: The SSH consists of a single platen at the centerline of the unit. Sootblowers will be located at five different elevations. There will be a sootblower on both boiler sidewalls at each elevation, giving a total of ten for the entire secondary superheater. Travel will extend through the platen to about one foot beyond. The nozzle will be back angled to clean the platen and the boiler sidewall more efficiently.

b. Intermediate Temperature Air Heater and Primary Superheater: The ITAH and PSH will have a single blower at each location, for a total of 15 sootblowers.

c. Economizer: There will be a single blower at each of 14 locations. All blowers will be mounted on the outside of the vertical connecting flues shown previously in Figure 4-13a. The blower lance will extend through the connecting flue to the economizer surface, retracting only to the partition between the tube bank and the flue when not in use.

d. Tubular Air Heater: Two straight-line blowers will be placed at each end of the cold gas pass. To reduce the blowing rate, two elements are used at each location. One element has five nozzles while the other has six nozzles, thus combined they cover the 11 tube depth. As the blowers travel across the tubes, the entire 15 x 11 matrix is cleaned. To eliminate interference, blowers at the same elevation will be mounted on opposite sides of the heater.

e. Regenerative Air Heater: This air heater consists of a hot (top) and cold (bottom) section of Rothemuhle surface separated by a void contingency space. One straight-line blower will be placed at the top and bottom of the heater assembly, each blower having ten spray nozzles to clean the surface adequately. The blowers enter from the right side.

4.9.11. Steam Drum

Since this is a subcritical pressure builer with recirculation, a steam drum has been provided. The primary functions of the drum are to provide a free controllable surface for separation of saturated steam from water and a housing for any mechanical separating devices. Also,

this steam drum serves as a vessel for boiler water treatment by chemicals and intermittent blowdown to reduce solids concentration in the boiler water.

The steam drum has a 54" I.D. and a straight length of 14'-0". The drum was sized to accommodate the separating equipment and water level changes that occur with changing load. Also, the straight length was influenced by the placement of the drum support straps.

Design pressure is 2950 psig with a design flowrate of 1,280,000 lb/hr. Based on this total flowrate, ten cyclone separators are required. Cyclone separators are primary steam separating devices, placed in a single row on the front half of the drum (see Figure 4-23). Directly above the cyclone separators are inclined primary scrubbers and, at the top of the drum, a secondary scrubber and dry pan will be installed. The scrubbers remove water droplets from the steam.

There are several inlet and outlet connections to the drum. A single feedpipe coming in the end and running along the bottom center of the drum distributes feedwater from the economizer. Two 11" I.D. end downcomers carry the drum water to an inlet manifold just below the circulating pumps. Several risers from the wall circuit return headers are attached to the bottom of the drum, delivering the steam-water mixture. Also, a single connection at the top center of the drum is provided as the steam outlet. Figure 4-23b shows an exterior view of these connections on the drum.

During full load operation, the economizer supplies 49,350 lb/hr of feedwater to the steam drum. Circulating flow out is 1,232,844

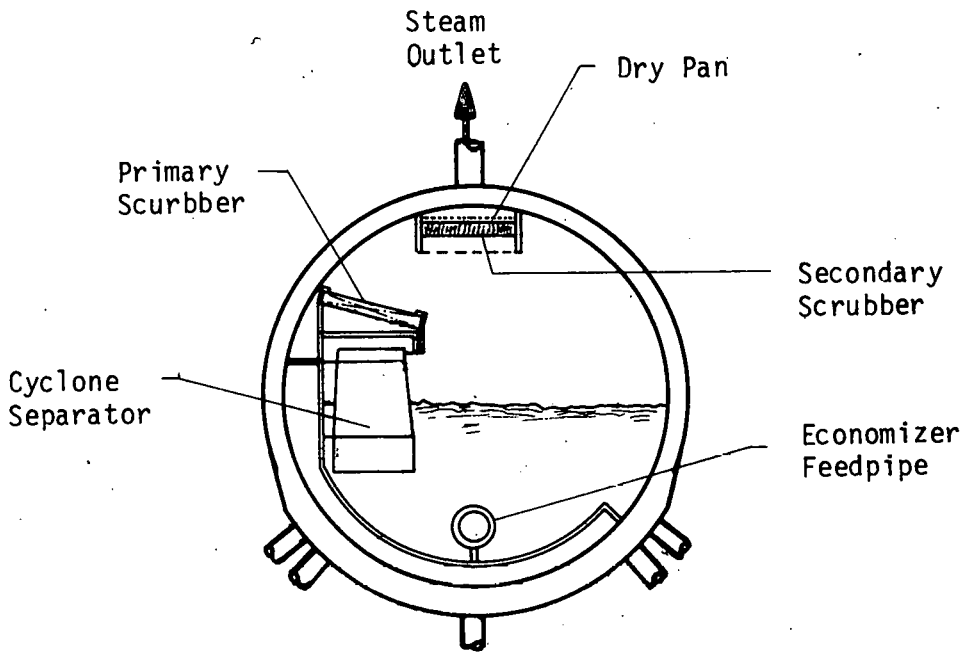

a) Sectional Side View

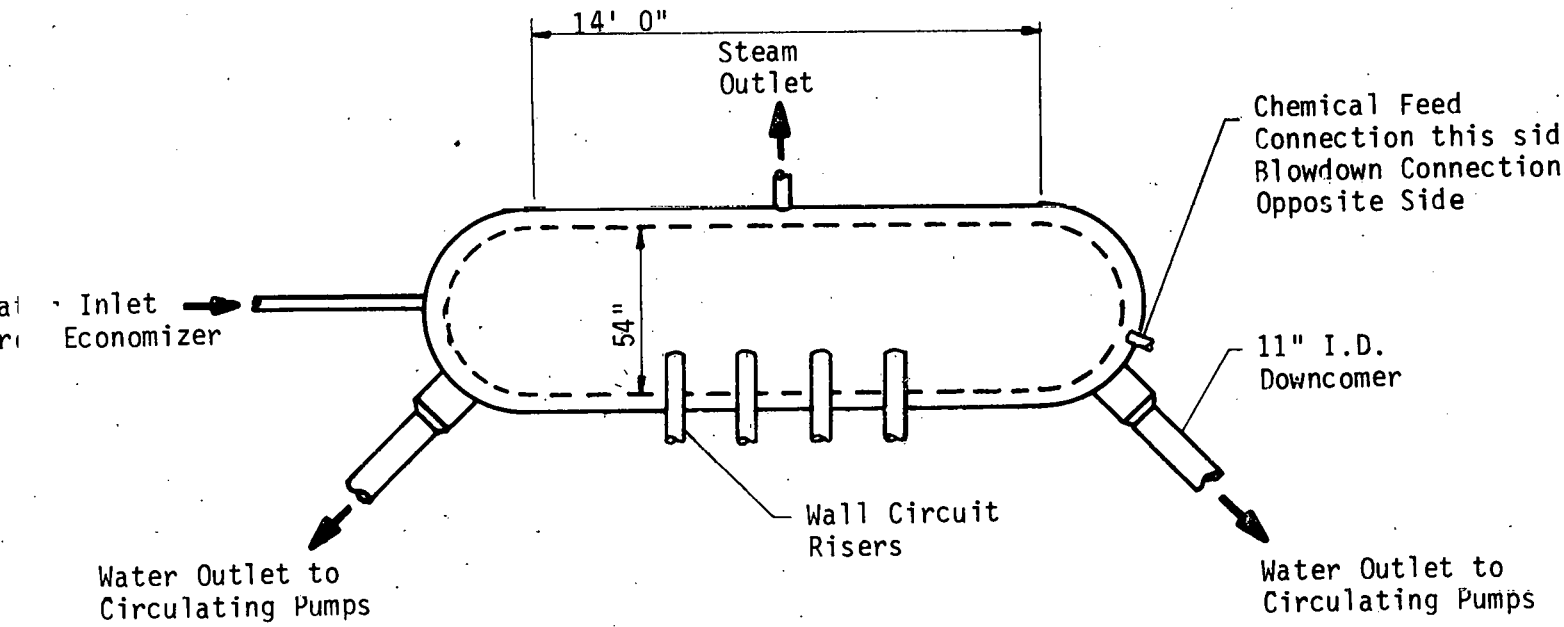

b) Front View

Figure 4-23 Steam Drum

lb/hr. With the addition of 1906 lb/hr of seal water at the circulating pumps, total circulating flow back to the drum is 1,234,750 lb/hr. Steam flow out to the primary superheater and flash tank is 51,756 lb/hr.

4.9.12. Surge Tank

The surge tank functions as a holding tank, receiving condensate from the steam condenser and discharging it to the subcooler. Make-up water is added to the surge tank as needed to compensate for losses incurred during steam drum blowdown and sootblowing.

The tank design pressure is 200 psig to match the condenser/subcooler design pressure. The tank capacity is 3600 gallons, based on a maximum expected surge of about 1800 gallons. This leaves a non-working volume of about 1800 gallons. The tank measures approximately 7' in diameter with a straight length of 12' (see Figure 4-24).

The condensate will be brought into the surge tank below the water level. This will provide a seal to prevent steam from flowing up into the condenser and it will also tend to stabilize tank pressure.

A semi-circular inlet distributor will be placed at the bottom of the tank just off the vertical centerline enough to clear the outlet nozzle. Perforations will be on the side of the distributor closest to the very bottom of the tank and near to where the distributor attaches to the tank. The condensate inlet nozzle will be at the top and will be internally connected to the distributor.

Also, a steam pressure equalizing line is provided from the steam condenser inlet to the top of surge tank. This line provides 100 psig steam to the non-working volume of the tank, maintaining constant

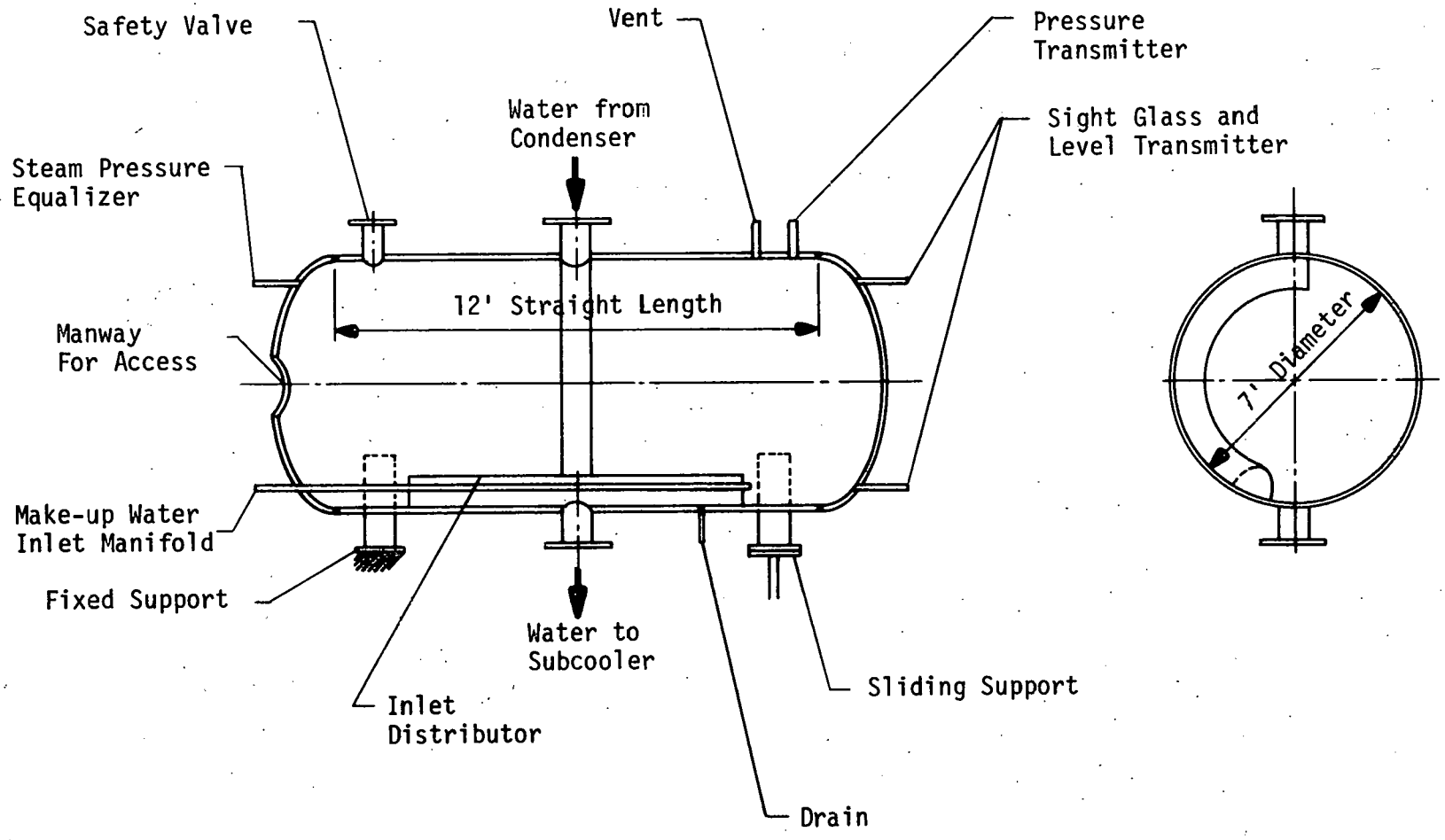

Figure 4-24 Surge Tank

pressure in the surge tank and thus constant suction pressure to the boiler feed pump.

A sight glass and level transmitter are located at the high and low water level limits for control purposes. The tank is also fitted with a safety valve on top and a drain at the bottom.

During full load operation, 55,158 lb/hr of saturated water flows in and out of the surge tank.

5.0. Controls

The HRSR system is essentially a waste heat boiler with its heat input being determined by the MHD combustor and channel. There is, therefore, no direct control over boiler steam production and in a commercial power generation system such as the 300 MWt unit the relationship between the boiler and steam turbine controls will be somewhat different than for a conventional power plant. The boiler will follow the MHD system and the steam turbine will follow the boiler performance to maintain throttle pressure. This parallels the commercially applied turbine following control system where the steam turbine itself has no load control capability but simply follows the performance and response of the boiler.

The CFFF/HRSR system will not contain all the elements of a commercial unit. Therefore, in order for the 20MWt pilot to simulate real life conditions along the process flow path, the controls will have to differ considerably from the controls for a commercial unit. A prime example of this difference is in the area of steam flow control. The 20 MWt HRSR system, like the 300 MWt system is a waste heat boiler. However, instead of its total steam production flowing to a steam turbine with no control over the steam flow, the steam produced in the 20MWt HRSR system is routed to a number of different heat traps in a controlled manner to accomplish the desired simulation of metal and gas temperature profiles in crucial areas. This portion of the control system bears no similarity to the control requirements or dynamic interactions that would be anticipated for the 300 MWt unit. On the other

hand, in areas such as control of furnace draft and control of the secondary combustion air, the control system for the 20 MWt unit is quite similar to that required for the 300 MWt unit.

5.1. Description of the Control Subsystems

The 20 MWt HRSR controls are described on the following pages. For a symbolic presentation of the controls refer to the logic diagrams at the end of this section. The diagrams are simplified to show only the control functions that are essential to understand how the controls work. The instrument, control and equipment symbols used in these diagrams are defined in Figure 5-1.

Most of the controls are simple single loops in which the controlled factor (flow, temp., etc.) is compared with a set point representing the desired value. If a difference exists, the final control element is adjusted until the set point value is achieved. In a few cases anticipatory factors are used to improve the response of the control. Where there can be interaction among two or more controlled variables, the control loops are coupled to permit all set point deviations that affect the same or related manipulated variables to act together in weighted fashion on those variables until all deviations return to zero. This will eliminate the hunting tendencies that occur when multiple set point deviations act one at a time through changes in the process.

A hand/auto selector station will be placed just upstream of all final elements to permit manual operation.

A flow element will provide a correct measurement for only one pressure and temperature. Automatic correction of all flows will be provided where these factors are subject to change. This includes pressures and temperatures held to a set point value on the assumption that experimentation may dictate changes in some set points.

5.1.1. Nozzle and Diffuser Cooling Systems (Figure 5-2)

The nozzle and diffuser together makeup the MHD channel simulator which reduces the temperature and pressure of the combustor gas before entry into the furnace of the HRSR system. The surfaces swept by the gas will be cooled by water furnished by CFFF at the correct pressure and temperature. The cooling water flow paths are designed to pass sufficient water at the available supply pressure so that no flow control will be necessary. Total flow and temperature entering and leaving each device will be measured for heat balance purposes. Also, the temperature leaving the individual flow paths will be monitored.

5.1.2 Steam Drum Level/Feedwater Control (Fig. 5-3)

To prevent a faulty water level transmitter from affecting the control of water level, the output of three transmitters are compared to a manner that selects the median signal. This is accomplished by comparing the output signal of each transmitter with the others and picking the low signal in each comparison. The highest of the three low signals will be the median signal. The median signal is used for high or low water level alarm and trip. The median signal selected is also used as input to the control room recorder and to the plant computer and is used in the drum water level control system. To alarm a faulty transmitter, the signal from each transmitter is compared to the median signal and if a deviation occurs, it is alarmed.

The feedwater flow control loop develops the basic demand for feedwater by comparing the median drum level signal with the set point level. Control response is improved by using steam flow as an anticipatory (feed forward) factor. To minimize the effects of system disturbances, the demand is further compared with actual feedwater flow and if a difference exists, valve WV-3 is adjusted.

5.1.3. Steam Drum Pressure and Superheater Steam Temperature Controls (Figure 5-4)

Since this is a waste heat unit, the steam generated is uncontrolled. Therefore steam flow from the drum must be regulated to maintain constant drum pressure. Primary superheater (PSH) and secondary superheater (SSH) steam outlet temperatures are also maintained constant by regulating steam flow from the drum. The superheater requirements are always less than the total steam produced so that the excess can be bled from the steam drum directly to the condenser to control drum pressure.

Because drum pressure and both superheater outlet temperatures are controlled by regulating flow from the drum, there must be proper interaction between the pressure and temperature controls to prevent instability. This is accomplished by coupling the pressure and temperature control loops together to permit a set point deviation to act alone or in conjunction with others on the same manipulated variable.

The controls are set up on the premise that superheater absorptions and steam production change in the same direction. The drum pressure control was therefore set up to vary steam flow from the drum in a way that will tend to hold both superheater outlet temperatures at set point while maintaining drum pressure constant. For example an increase in drum pressure will cause superheater flows (SV-1 and SV-3) and bleed flow (SV-6) to increase. Flow increase through the superheaters will tend to offset the increase in absorption. Superheater flows will be adjusted to final values by applying a vernier correction to SV-1 and SV-3 derived by comparing outlet temperature with set point temperature. Final correction to drum pressure will be done by readjusting bleed control valve SV-6.

5.1.4. Secondary Superheater Attemperator Control (Fig. 5-5)

To reduce the high temperature entering the heat rejection equipment, the superheated steam is attemperated with boiler feedwater. The attemperator outlet temperature is controlled to set point by adjusting spray valve AV-1. Steam flow is used as an anticipatory factor to improve response.

5.1.5. Secondary Superheater Outlet Pressure Control (Fig. 5-5)

This control provides a constant pressure at the outlet of the secondary superheater. Set point pressure is maintained by adjusting outlet pressure control valve SV-2.

5.1.6. Flash Tank Pressure and Intermediate Temperature Air Heater Outlet Temperature Control (Fig. 5-6)

The flash tank provides the intermediate temperature air heater (ITAH) with a source of low pressure saturated steam which is obtained by throttling drum steam. For this purpose, the flash tank will be held at constant pressure. ITAH outlet temperature is controlled by regulating flow through the ITAH. More steam is available than the ITAH requires, so the excess can be bled directly to the condenser to control flash tank pressure. Since ITAH steam outlet temperature and flash tank pressure are both controlled by flow from the tank, there must be interaction between the temperature and pressure control loops to eliminate unstable operation. This is achieved by coupling the two loops together so that both set point deviations can act simultaneously on the same manipulated variable.

The control is set up on the premise that changes in ITAH absorption

and steam flow to the flash tank will be in the same direction. For example, if flow to the tank increases, tank pressure will increase and the pressure control loop will cause ITAH flow (SV-4) and bleed flow (SV-5) to increase. Flow increase to the ITAH will tend to offset the change in absorption. ITAH flow will be adjusted to final value by applying a vernier correction derived by comparing ITAH outlet temperature with set point temperature. Final correction to tank pressure will be done by readjusting the bleed flow (SV-5).

5.1.7. Intermediate Temperature Air Heater Attemperator Control (Fig. 5-7)

To reduce the high temperature entering the heat rejection equipment, the steam leaving the intermediate temperature air heater is attemperated with boiler feedwater. The attemperator outlet temperature is controlled to set point by adjusting spray valve AV-2. Steam flow is used as an anticipator factor to improve response.

5.1.8. Flash Tank Level Control (Fig. 5-8)

Throttling the drum steam to flash tank pressure results in a mixture of steam and water. For the steam-water mixture to be properly separated, the inventory of water must be controlled. This is accomplished by a single loop level control which will position water letdown valve WV-1.

5.1.9. Condenser Pressure Control (Fig. 5-9)

The heat absorbed by the system is dissipated to atmosphere in two stages. The first stage consists of condensing the steam coming from

the various absorption paths. In the condenser, a single loop control positions variable pitch fan blades that regulate the ambient air flow over the transfer surface. Heat removal will cause the volume of steam to collapse fast enough to maintain condenser pressure at set point.

5.1.10 Surge Tank Level Control (Fig. 5-10)

This tank provides surge capacity to take care of upset and transients and a means of controlling the inventory of water in the system. This is accomplished by maintaining the water level within a certain range by using a digital control to add water through make-up valve WV-2 and discarding water through drain valve WV-4.

5.1.11. Subcooler Outlet Temperature Control (Fig. 5-9)

The subcooler provides the second stage of heat rejection to atmosphere. The subcooler receives saturated water from the surge tank and cools the water to set point temperature which is the feed temperature entering the economizer. This is done by a single loop control that positions variable pitch fan blades that regulate ambient air flow over the transfer surface.

5.1.12. Secondary Combustion Air Flow Control (Fig. 5-11)

Air is introduced near the top of the furnace to burn out the combustibles left in the gas by substoichiometric conditions in the MHD combustor. Total air (combustor air plus secondary air) is compared to fuel flow characterized to represent the total air required. If a difference occurs, the secondary combustion air control damper is repositioned. Oxygen concentration in the flue gas downstream of the

secondary combustion zone will be used to modify the damper position to assure adequate burnout.

5.1.13. Secondary Combustion Air Temperature Control (Fig. 5-11)

On a commercial unit, the secondary air will be clean, spent air from the coal grinding and collection paths. This air is heated to dry the coal as it is being pulverized. To simulate this condition on the MHD-HRSR pilot, the secondary air will be heated to mill outlet temperature. This will be achieved by a single loop control that will heat the air to set point temperature by pulsing power through a silicon controlled rectifier (SCR) to resistance heating elements in the air duct to the HRSR system.

5.1.14. Induced Draft Fan Control (Fig. 5-12)

The MHD-HRSR pilot will operate as a balance draft system with the location of the control point at the top of the furnace. This will be done by a feed forward loop control that will hold furnace draft at set point value by adjusting an inlet damper on the induced draft fan. Total air flow (primary plus secondary combustion air) will be used as an anticipatory factor to improve control response.

5.1.15. Tubular and Regenerative Air Heater Control (Fig. 5-13 and Fig. 5-14)

Both air heaters will be used to analyze the heat transfer, corrosion and fouling characteristics, and the cleanability of the transfer surface. Past experience indicates that these factors become problematical only at the cold end of the heater, i.e. where the coldest gas

passes the coldest air. For this study, the heaters will be set up in counterflow configuration and the cold end environment will be controlled by controlling certain variables.

For the tubular air heater, the controlled variables are:

Air inlet temperature

Air flow

Gas outlet temperature

Air inlet temperature will be held to set point value by a single loop control that will pulse power by means of a silicon controlled rectifier (SCR) to resistance elements in the duct.

Air flow will be controlled to set point value by a single loop control that will position a damper.

Gas outlet temperature will be held to a set point value by a single loop control that positions a gas flow control damper.

For the regenerative air heater, the controlled variables are:

Air inlet temperature

Air flow

Gas flow

Frequency of thermal cycling

Air inlet temperature will be held to set point value by a single loop control that will pulse power by means of a silicon controlled rectifier (SCR) to resistance elements in the duct. Air and gas flow will be controlled to set point value by a single loop control that will position a damper.

Thermal cycling of the transfer surface will be done by alternately passing gas and air over the surface. Two position dampers in the air and gas streams will be actuated by an adjustable timer.

5.1.16. Furnace Purge Control

A furnace purge is required on start-up, shutdown, and/or unit trip to remove any combustibles from the furnace. The following permissives must be met before the purge will begin:

Combustor off

Fuel valves closed

Fuel header valve closed

Main combustor fan on

ID fan on

Boiler air flow greater than 50%

When these purge permissives are met, the boiler will undergo a five minute purge.

5.2. Measurement Readouts

All measurements deemed essential or desirable for the safe operation of the unit will be displayed on a panel. In most cases, the display will be an analog indicator. A recorder will be used only where it is important that the operator detect as soon as possible when an undesirable trend is developing. The readouts and all measurements that will be logged into a computer for analysis purposes are listed in Table 5-1.

5.3. Annunciation and Trip Factors

Equipment protection is provided by annunciating certain controlled factors if they exceed set point value by a specified amount.

When timely response to annunciations is mandatory, automatic system trips are provided. Table 5-2 lists the annunciator and trip factors. Where two status points such as HI and HI-HI are indicated, the intent is to give the operator a chance to take corrective action before the trip status is reached. Where a single annunciator and trip point is listed, it is assumed that there is little chance that the operator can take the necessary action to avoid a trip.

5.4. Diagnostic Instrumentation

Listed below is the type, quantity, and location of diagnostic instrumentation that will be used to verify existing "codes" for heat transfer and gas stream behavior.

A total of six (6) two-color pyrometers (Pyro) will be required. Four (4) will be located in the radiant furnace and two (2) will be in the Secondary Superheater pass. The two (2) instruments in the Secondary Superheater pass will be moved to additional openings in the pass if required.

A total of three (3) Sodium Line Reversal Systems (SLRS) will be used in the Radiant Furnace.

A total of four (4) Laser Transmissometers (LT) will be required. Three (3) will be used in the Radiant Furnace and one (1) in the Intermediate Temperature Air Heater pass.

A total of three (3) Laser Doppler Velocimeters (LDV) will be required in the Radiant Furnace.

A total of three (3) Particle Size Distribution Systems (PSDS) are required. Two (2) will be in the Radiant Furnace and one (1) in the Intermediate Temperature Air Heater pass.

One (1) Albedo (Alb) measuring device and one (1) CARS will be required in the Radiant Furnace.

A total of twenty-four (24) intrusive gas probes will be used. Twenty (20) will be located in the Radiant Furnace, one (1) in the Secondary Superheater pass, one (1) in the Intermediate Temperature Air Heater pass, one (1) in the Primary Superheater pass, and one (1) at the Electrostatic Precipitator inlet. With these probes, a total of twelve (12) NO_x analyzers, twelve (12) SO_x analyzers, ten (10) CO-CO_2 analyzers, ten (10) O_2 analyzers, and nine (1) H_2S analyzers will be used. These quantities are based upon UTSI having gas sampling and analyzing equipment for the stack gases.

For the number and location of the instrument ports to be provided, refer to Figures 4-3, 4-9, and 4-10 in Section 4.0. Due to the experimental nature of this project, it is impossible to definitely assign certain ports to certain measurements. However, flexibility is afforded by making all ports the same size.

Table 5-1 Measurement Readouts

MEASUREMENT	PANEL BOARD READOUT	COMPUTER LOG
FLOWS-		
O_2 to combustor	Indicator	X
N_2 to combustor	I	
Fuel to combustor	I	X
Secondary combustion air	I	X
Steam from steam drum	I	X
Primary SH steam	Recorder	X
Secondary SH steam	R	X
ITAH steam	R	X
Economizer water	R	X
Economizer gas		X
*Tubular air heater air		X
*Tubular air heater gas		X
*Regenerative air heater air		X
*Regenerative air heater gas		X
Nozzle cooling water	I	X
Diffuser cooling water	I	X
PRESSURES (POSITIVE)		
Condenser Steam	I	X

*The measurements will be logged into computer only during component testing.

MEASUREMENT READOUTS (cont'd.)

MEASUREMENT	PANEL BOARD READOUT	COMPUTER LOG
PRESSURES (POSITIVE) - cont'd.		
Steam drum	Indicator	X
ITAH steam entering	I	X
Secondary SH steam leaving	I	X
Tubular air heater air entering		X
Secondary combustion air windbox	I	X
Primary SH steam leaving	I	X
DRAFTS (NEGATIVE PRESSURES)		
Top of Secondary Furnace	I	X
ITAH inlet		X
ITAH leaving 1st pass	I	X
ITAH leaving 2nd pass	I	X
Primary SH outlet	I	X
*Tubular air heater gas inlet		X
*Tubular air heater gas leaving 1st pass		X
*Tubular air heater gas outlet		X
*Reg. air htr top (draft/press)		X
*Reg. air htr intermediate (draft/press)		X
*Reg. air htr bottom (draft/press)		X
Precipitator inlet		X
Precipitator outlet (ID fan inlet)	I	X

*These measurements will be logged into computer only during component testing.

MEASUREMENT READOUTS (con'd.)

MEASUREMENT	PANEL BOARD READOUT	COMPUTER LOG
DRAFTS (NEGATIVE PRESSURES) - cont'd.		
Economizer Inlet		X
Economizer at inlet of 2nd gas pass		X
Economizer outlet	Indicator	X
TEMPERATURES		
Secondary combustion air	I	X
Primary SH steam outlet	I	X
Primary SH gas entering		X
Primary SH gas leaving		X
Secondary SH steam outlet	I	X
Secondary SH steam outlet after attemperator		X
Secondary SH gas entering		X
Secondary SH gas leaving		X
Intermediate temp. air htr steam outlet	I	X
ITAH steam after attemperator	I	X
ITAH gas entering 1st pass	I	X
ITAH gas leaving 1st pass		X
ITAH gas entering 2nd pass		X
ITAH gas leaving 2nd pass	I	X
Economizer gas entering		X
Economizer water entering	I	X
Economizer water leaving		X
Economizer gas leaving	I	X

MEASUREMENT READOUTS (cont'd.)

MEASUREMENT	PANEL BOARD READOUT	COMPUTER LOG
TEMPERATURES - cont'd.		
*Tubular air heater air entering		X
*Tubular air heater air leaving		X
*Tubular air heater gas lvg. 1st pass		X
*Tubular air heater gas leaving		X
*Tubular air heater gas entering		X
*Regenerative air heater top		X
*Regenerative air heater intermediate		X
*Regenerative air heater bottom		X
Secondary combustion air to windbox	Indicator	X
Precipitator gas inlet		X
Preciptator gas outlet		X
Diffuser cooling water in		X
Diffuser cooling water out		X
Nozzle cooling water in		X
Nozzle cooling water out		X
LEVELS		
Steam drum	Recorder	X
Surge tank	Indicator	

*These measurements will be logged into computer only during component testing.

MEASUREMENT READOUTS (cont'd)

MEASUREMENT	PANEL BOARD READOUT	COMPUTER LOG
MISCELLANEOUS		
Opacity leaving precipitator	Indicator	X
O_2 in gas after secondary combustion	Recorder	X
Boiler circulation pump current	I (2)	X
Boiler feed pump current	I	X
Condenser fan current	I	X
Subcooler fan current	I	X
I.D. fan current	I	X
Secondary combustion air fan current	I	X
Precipitator Primary Voltage	I	
Precipitator Primary Current	I	
Precipitator Spark Rate	I	

Table 5-2 Annunciation and Trip Factors

FACTOR	STATUS	VALUE	TRIP UNIT?
Pri. SH outlet temperature	HI		NO
Pri. SH outlet temperature	HI-HI		YES
Sec. SH outlet temperature	HI		NO
Sec. SH outlet temperature	HI-HI		YES
Sec. SH outlet temperature after attemperator	HI		NO
Sec. SH outlet temperature after attemperator	HI-HI		YES
ITAH outlet temperature	HI		NO
ITAH outlet temperature	HI-HI		YES
ITAH outlet temp after attemperator	HI		NO
ITAH outlet temp after attemperator	HI-HI		YES
Subcooler outlet temp.	HI		NO
Individual nozzle cooling water circuit exit temp.	HI		YES
Individual diffuser cooling water circuit exit temp.	HI		YES

ANNUNICATION AND TRIP FACTORS (cont'd.)

FACTOR	STATUS	VALUE	TRIP UNIT?
Condenser pressure	HI		NO
Furnace Draft	HI		NO
Furnace Draft	LO		NO
Circulation pump press differential	LO		NO
Surge Tank Level	HI		NO
Surge Tank Level	LO		BFP
Flash Tank Level	HI		NO
Flash Tank Level	LO		NO
Steam Drum Level	HI		NO
Steam Drum Level	LO		NO
Steam Drum Level	HI-HI		YES
Steam Drum Level	LO-LO		YES
Steam drum level Xmitter deviation 1 and 2	HI		NO
Steam drum level Xmitter deviation 1 and 2	LO		NO
Steam drum level Xmitter deviation 1 and 3	HI		NO

ANNUNICATION AND TRIP FACTORS (cont'd.)

FACTOR	STATUS	VALUE	TRIP UNIT?
Steam drum level Xmitter deviation 1 and 3	LO		NO
Steam drum level Xmitter deviation 2 and 3	HI		NO
Steam drum level Xmitter deviation 2 and 3	LO		NO
Nozzle cooling water flow	LO		YES
Diffuser cooling water flow	LO		YES
Secondary combustion air fan	FAIL		YES
Condenser fan	FAIL		YES
Subcooler fan	FAIL		YES
Sootblowers	FAIL		NO
Precipitator Transformer Temperature	HI		NO
Precipitator Voltage	LO		NO
Precipitator Voltage	HI		NO
Precipitator Controller Temperature	HI		NO

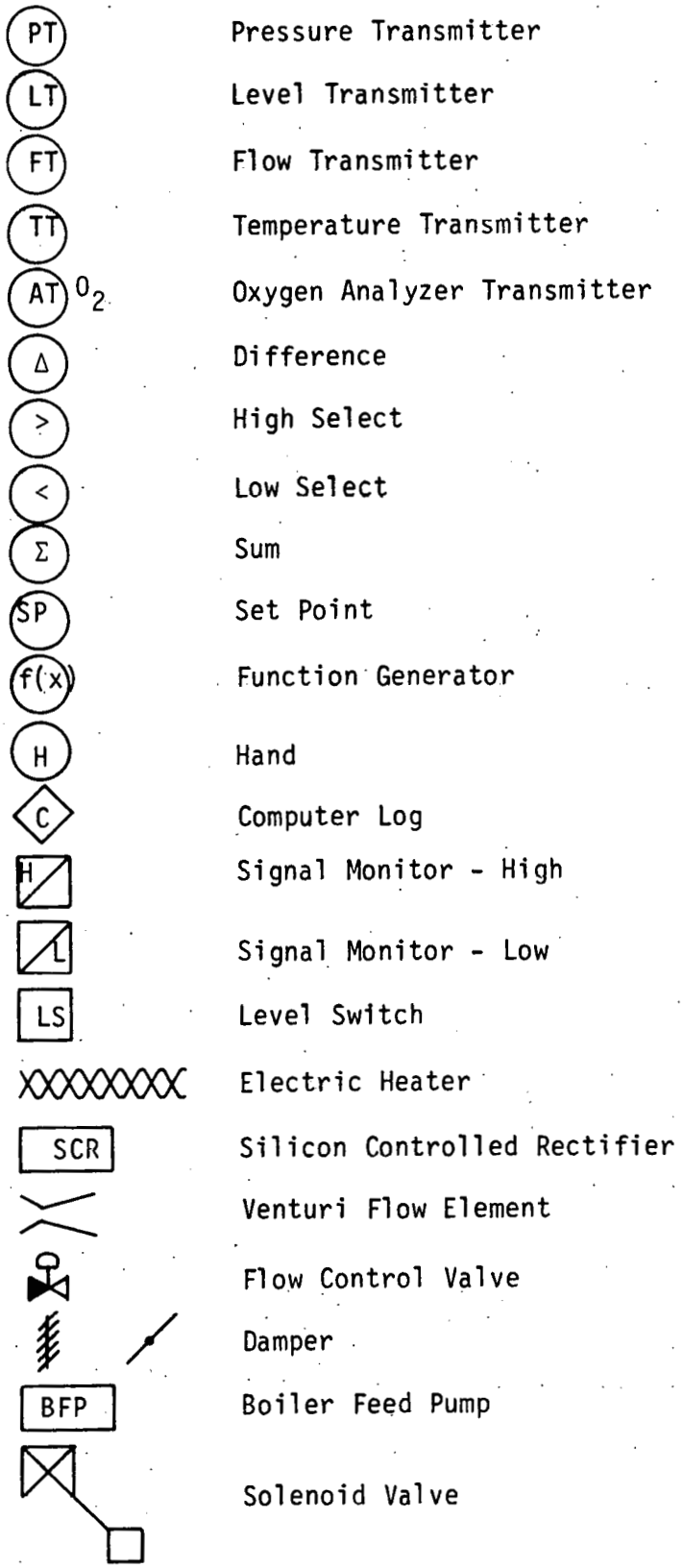

Figure 5-1 Instrument, Control and Equipment Symbols

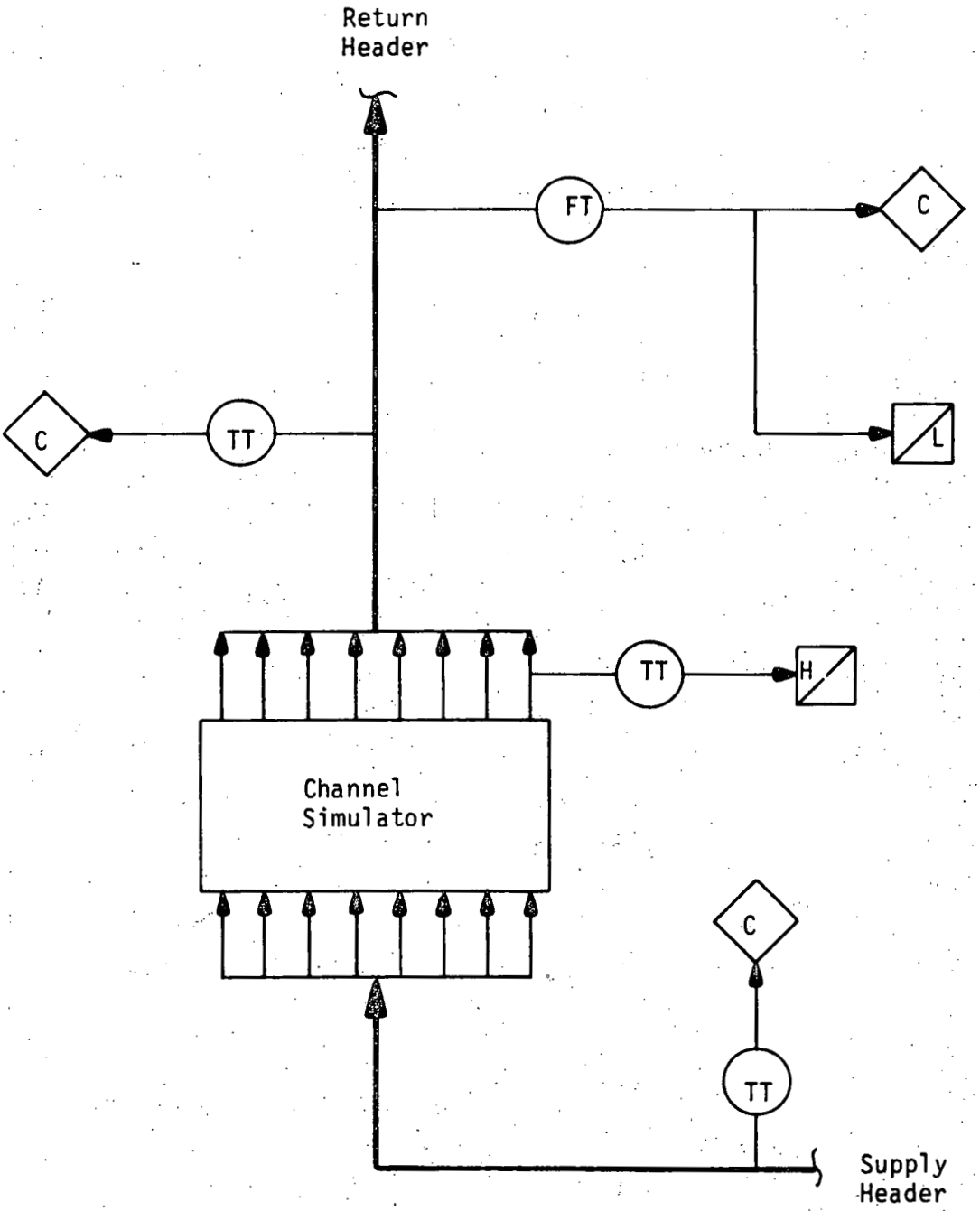

Figure 5-2 MHD Channel Simulator Cooling System

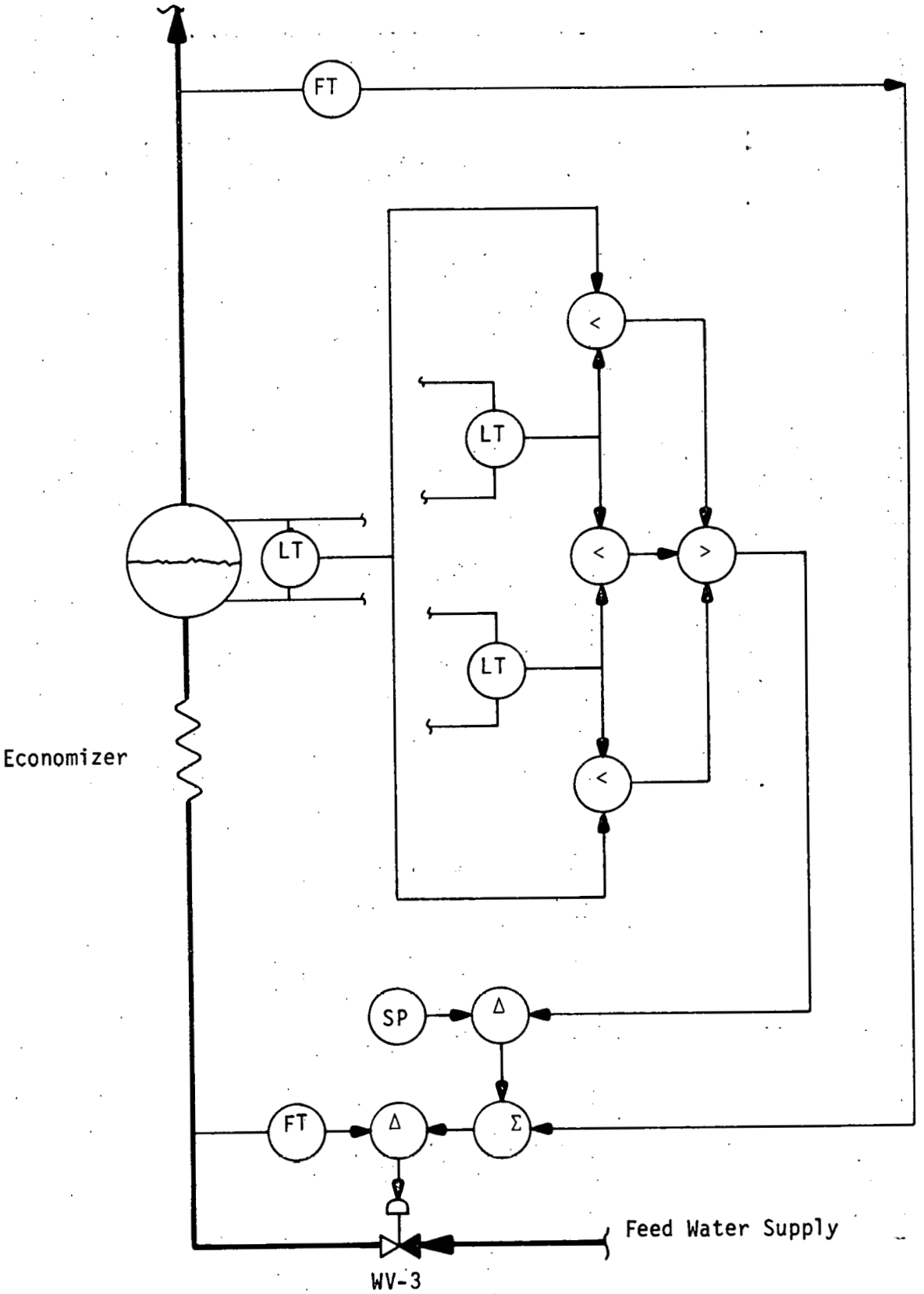

Figure 5-3 Steam Drum Level Control

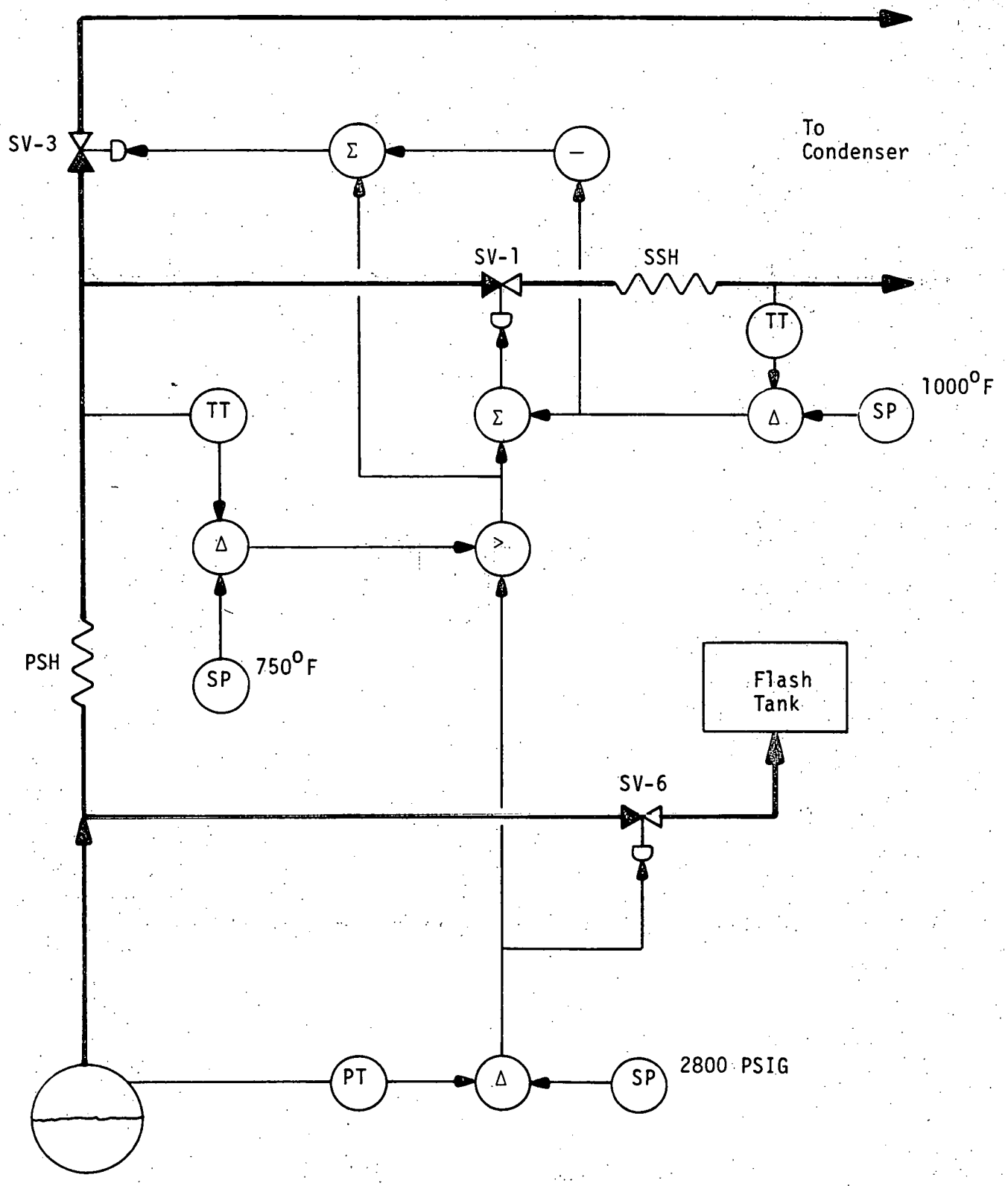

Figure 5-4 Steam Drum Pressure and Superheater Outlet Temperature Control

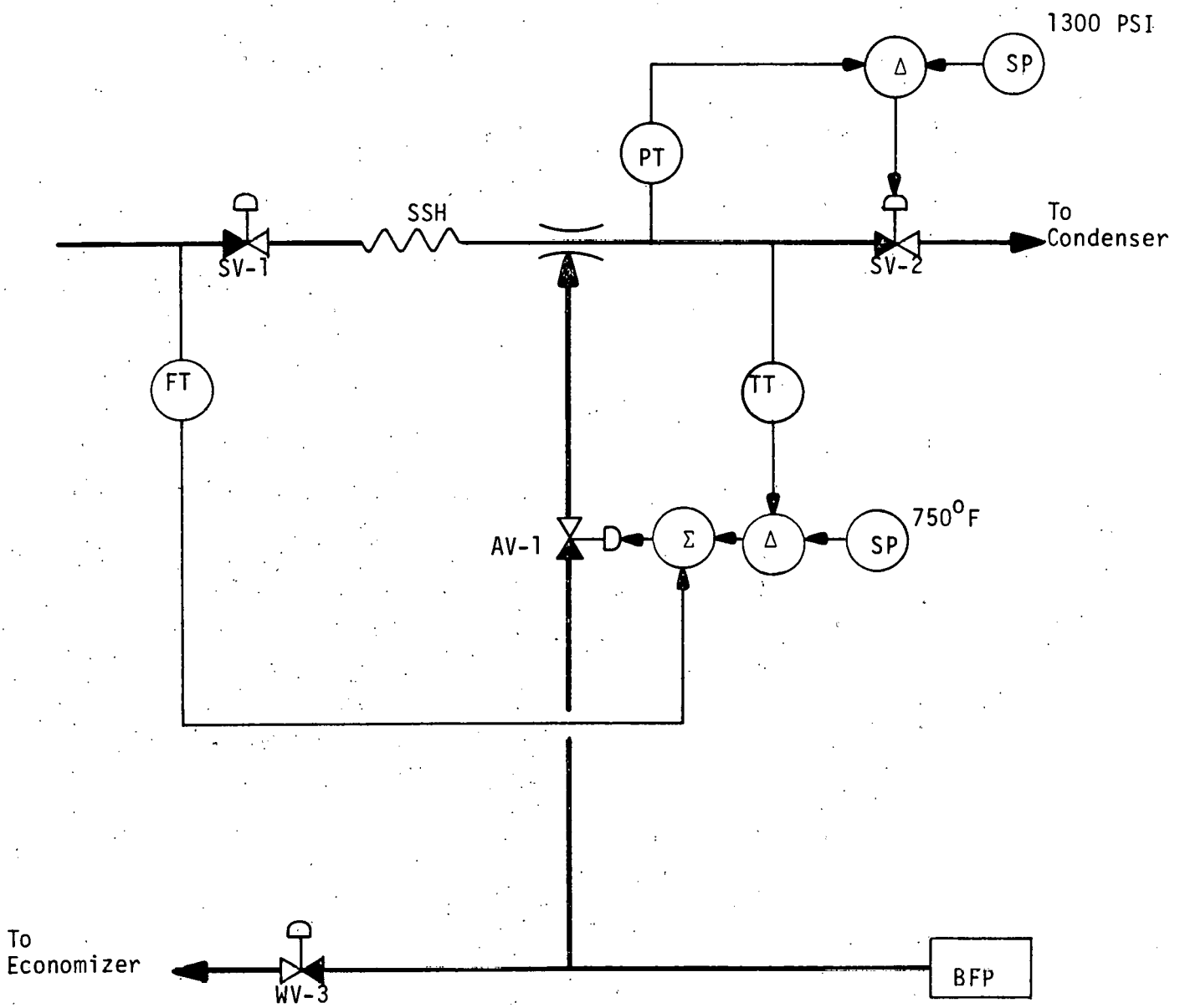

Figure 5-5 Secondary Superheater Attemperator Control and Outlet Pressure Control

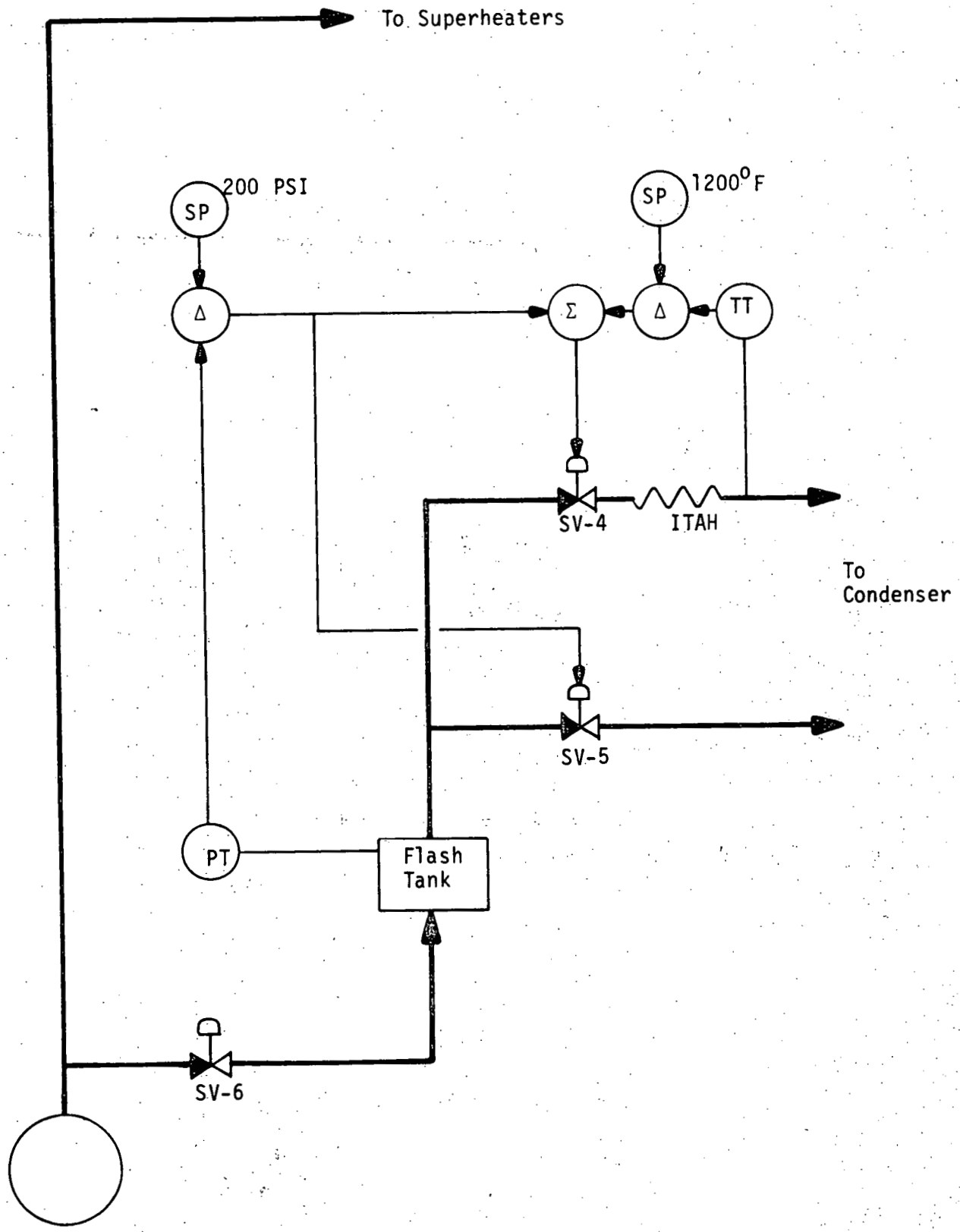

Figure 5-6 Flash Tank Pressure and Intermediate Temperature Air Heater Outlet Temperature Control

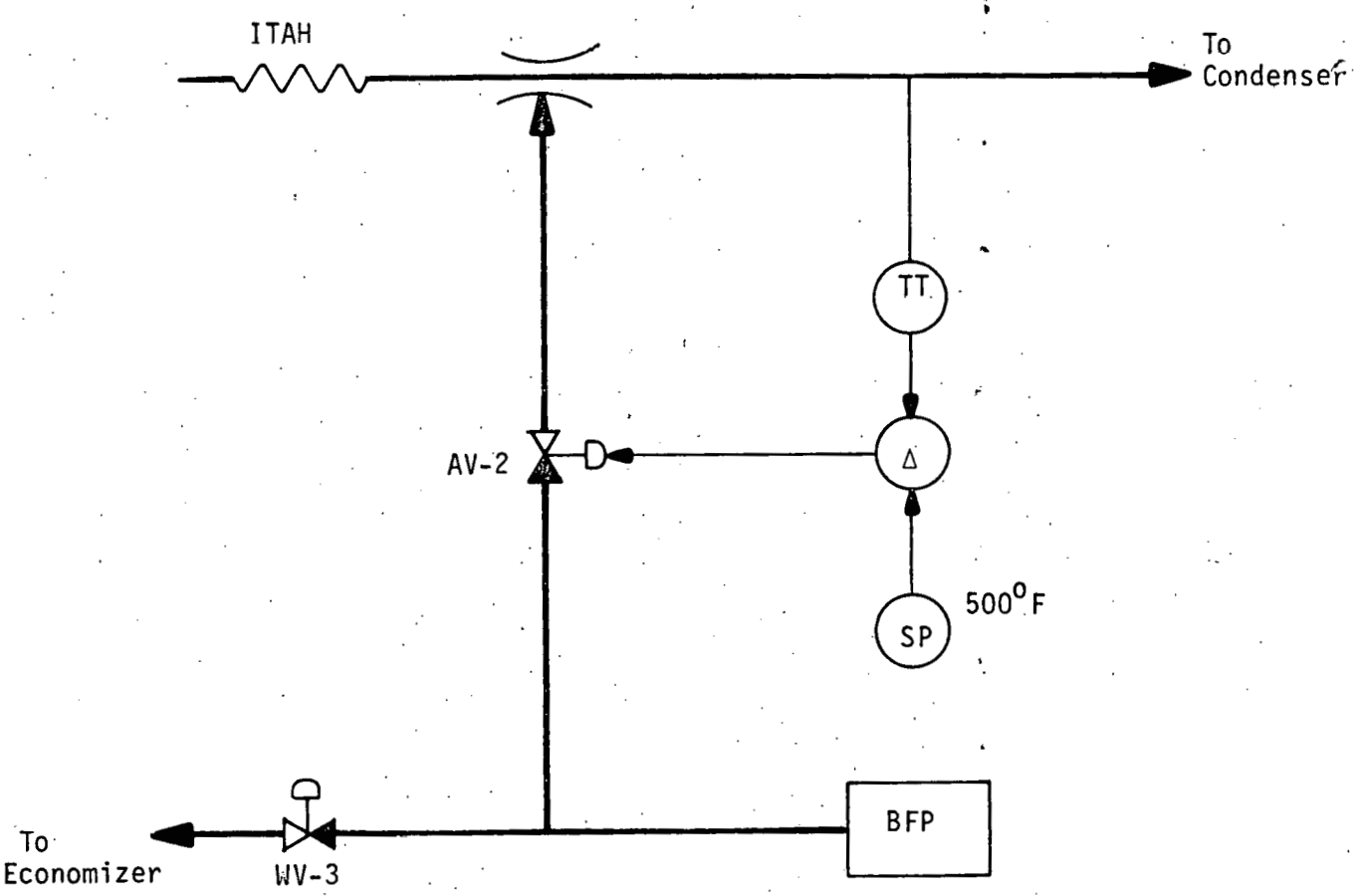

Figure 5-7 Intermediate Temperature Air Heater Attemperator Control

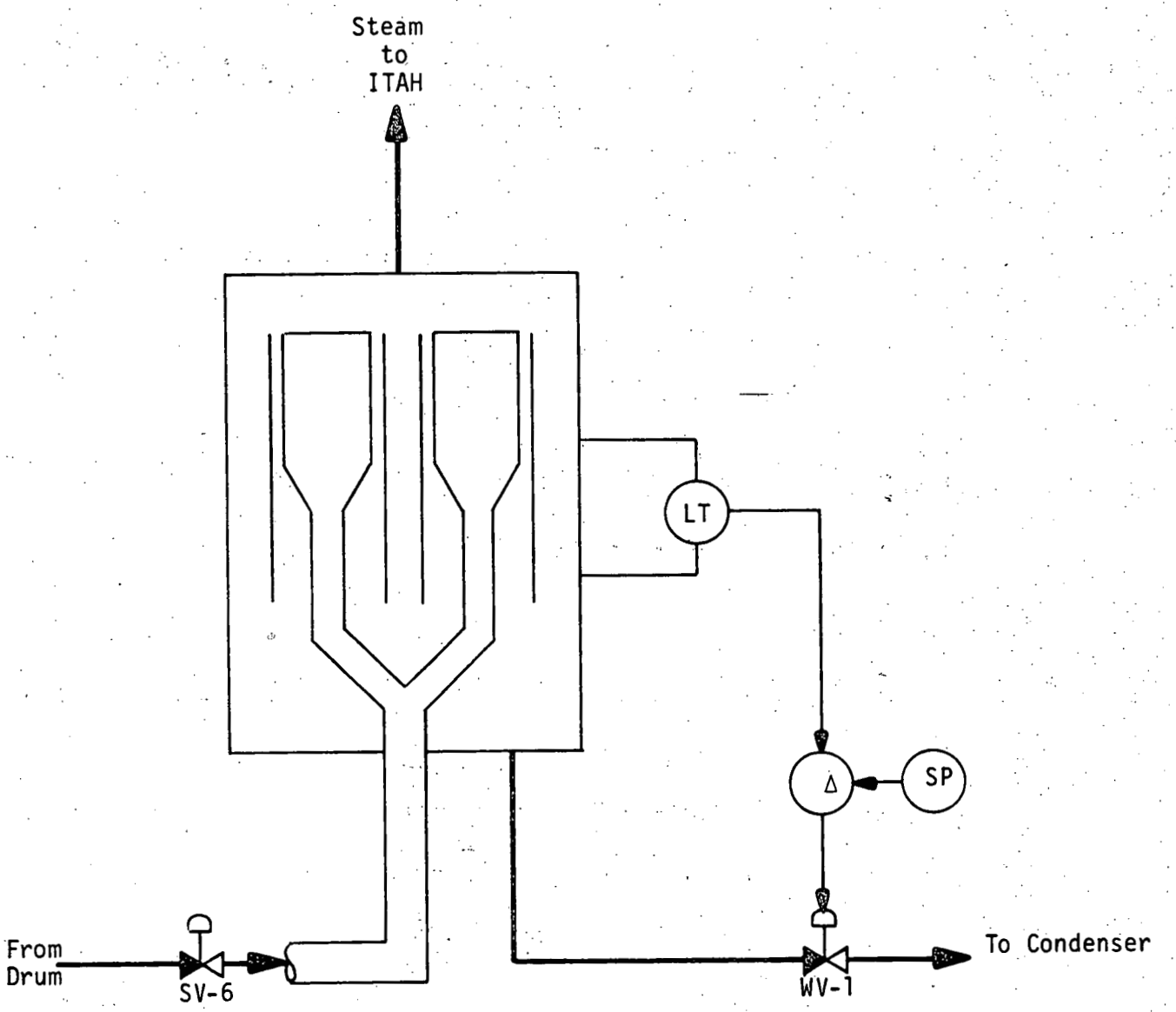

Figure 5-8 Flash Tank Level Control

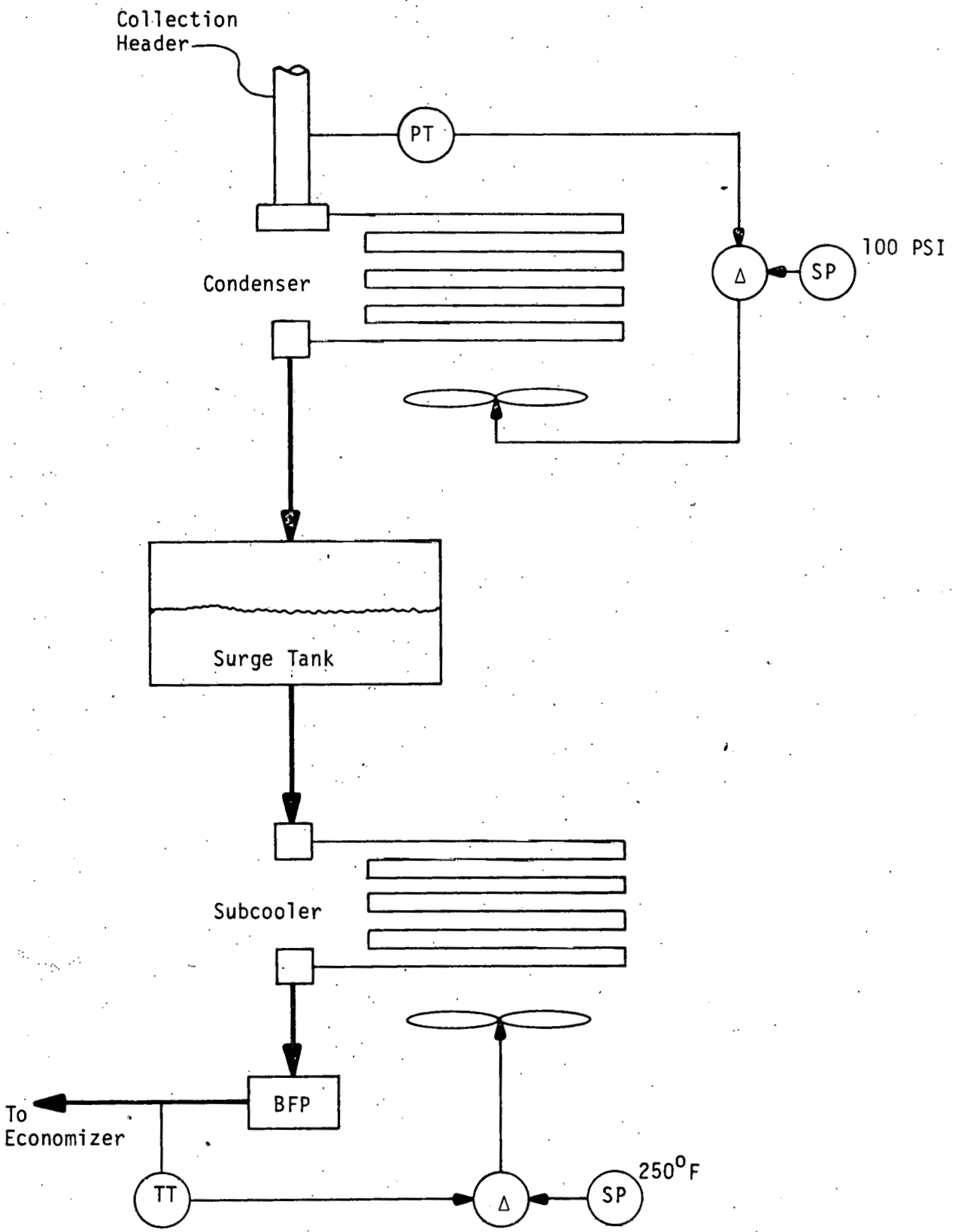

Figure 5-9 Heat Rejection System Control

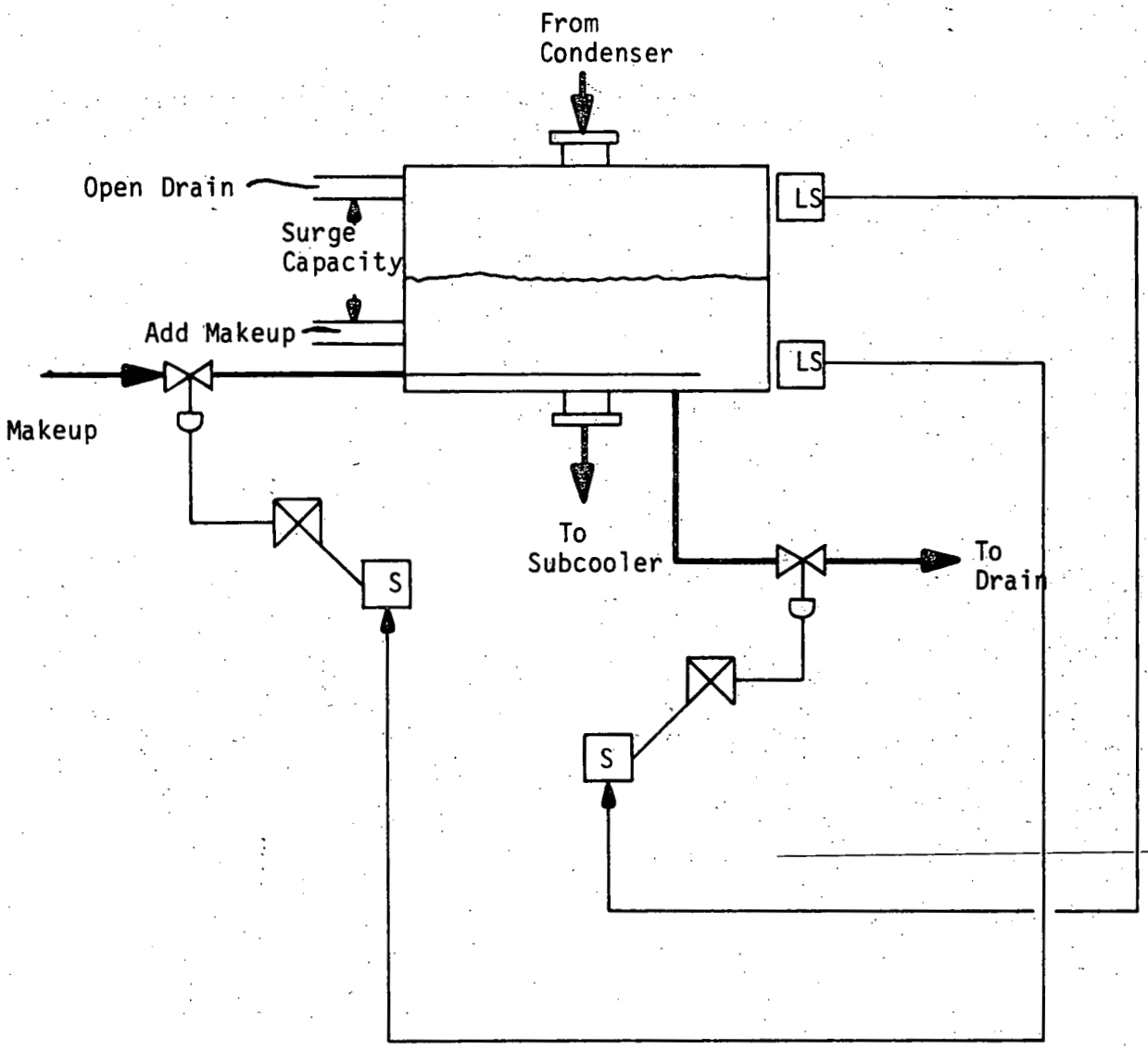

Figure 5-10 Surge Tank Level Control

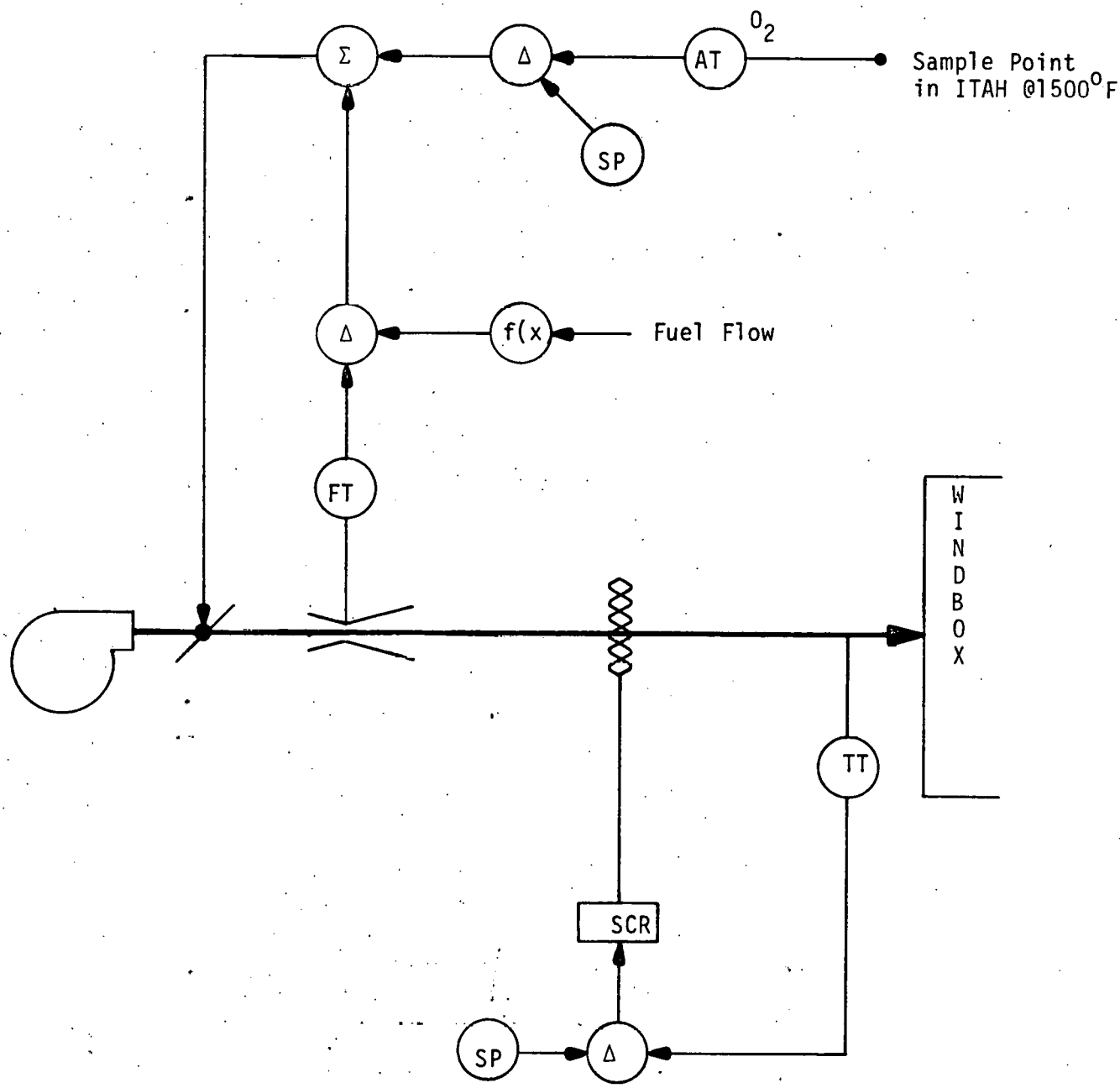

Figure 5-11 Secondary Combustion Air Flow and Temperature Control

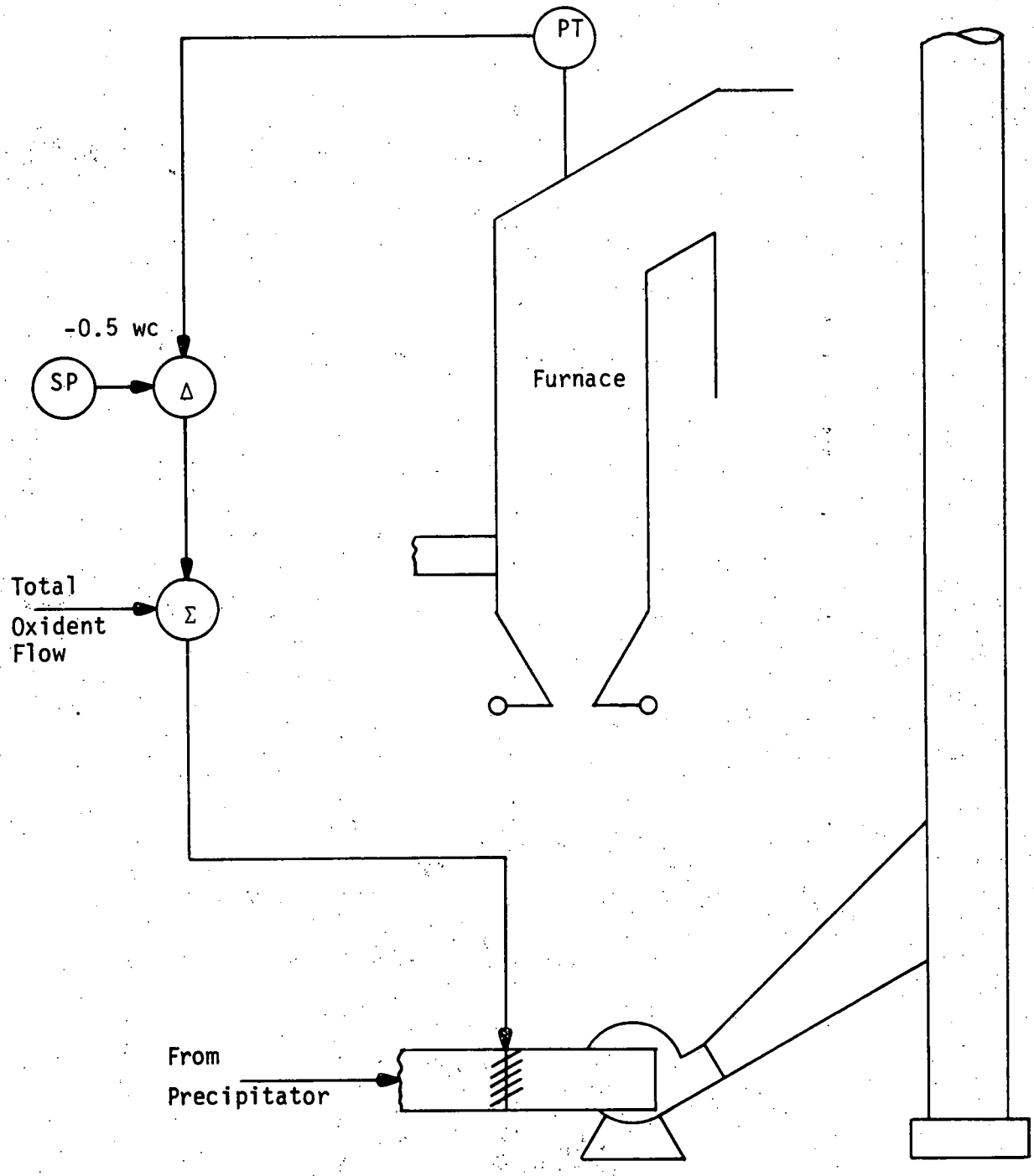

Figure 5-12 Induced Draft Fan Control

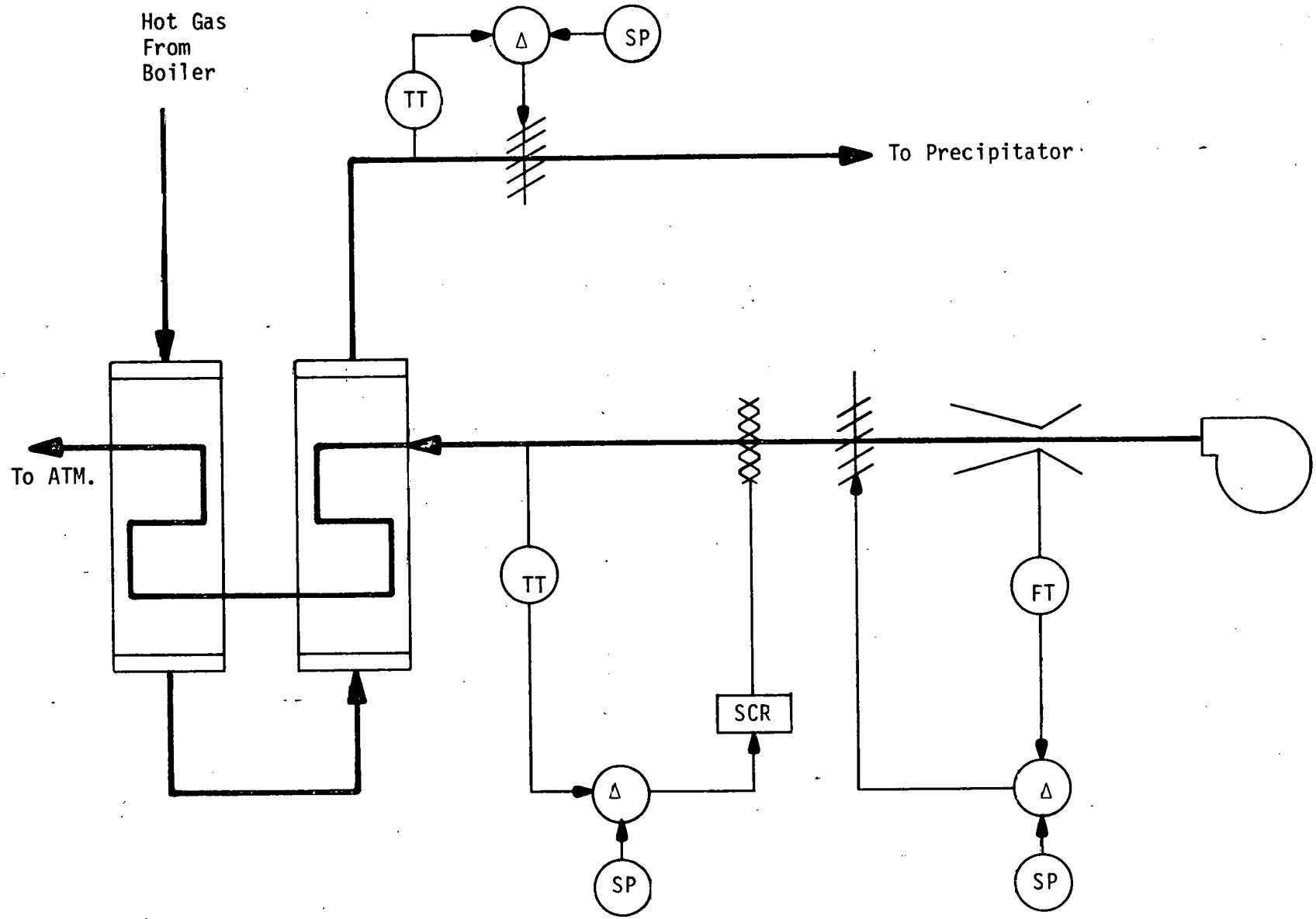

Figure 5-13 Tubular Air Heater Control

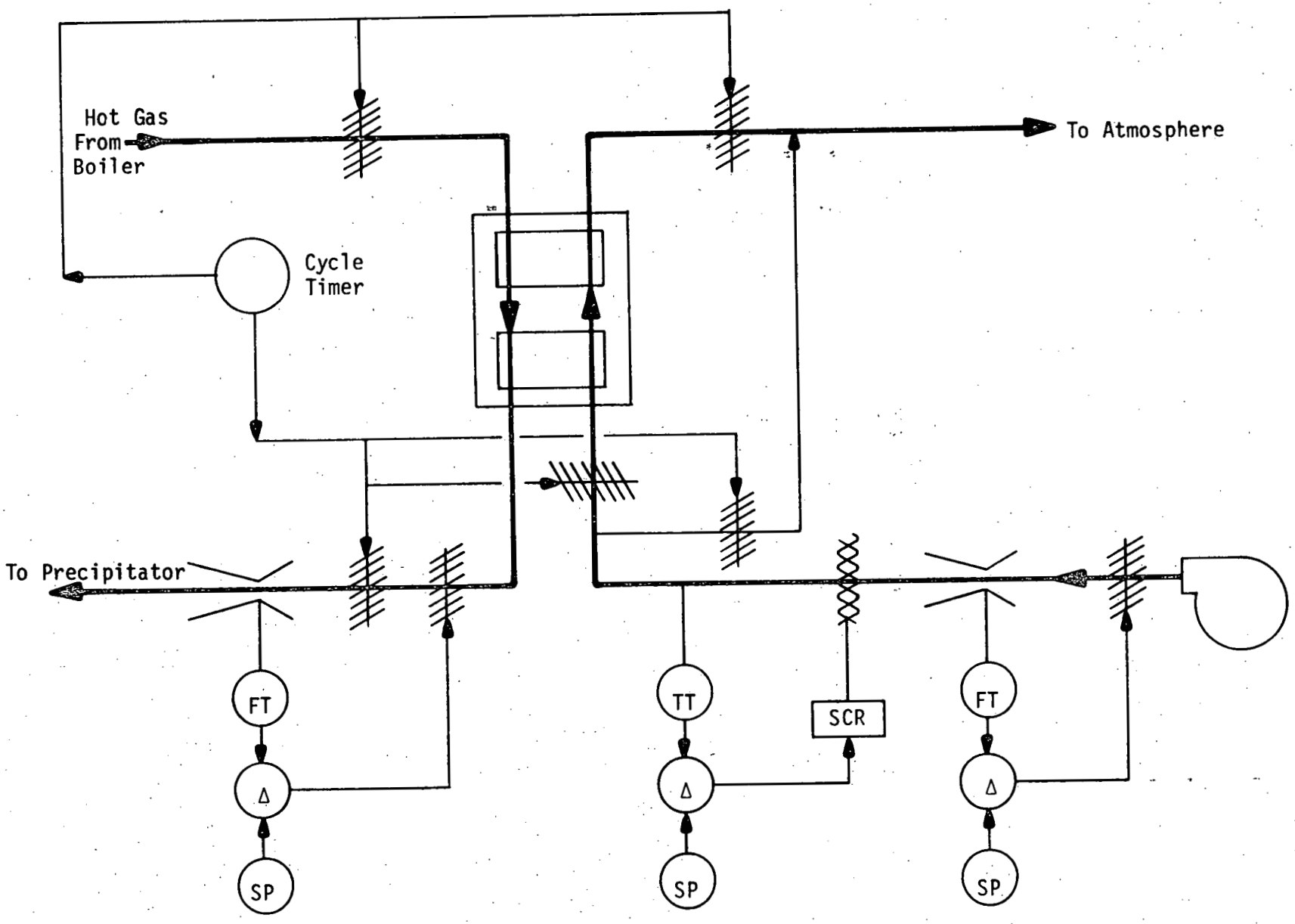

Figure 5-14 Regenerative Air Heater Control

6.0. Interfacing Systems

In July 1980, B&W and the CFFF operator, the University of Tennessee (UT) signed an Interface Agreement which established the responsibilities of the two organizations with respect to the design, installation, and testing of the equipment described in this report. It also provides a procedure for detailing and monitoring interfaces. This section describes the mechanical interfaces which have been identified.

6.1. CFFF Modifications

In order to install and test the 20 MWt HRSR as required by the contract, the following modifications must be made to the existing CFFF. B&W will provide UT with the specifications for these modifications as they become needed. UT is responsible for the design details and implementation of the changes.

1. Foundations
   Reinforced concrete foundations with anchor bolts, drainage piping, and a copper ground mat.

2. Instrument Cable Tray Openings
   Two in Test Building, Bay #3. One in Control Building, North Side.

3. Pipe Openings
   In Test Building for boiler feedwater supply and return.

4. Access Opening
   In Test Building, Bay #3, South Side.

5. Fire Protection System

6. Computer for Data Acquisition

7. Coal Feed System
   For Montana Rosebud Coal. (Specifications for this item to be supplied by DOE.)

6.2 Utilities

The CFFF operator will be required to supply certain utilities and services for the 20 MWt HRSR. The following sections quantify and describe these requirements.

6.2.1. Electric Power Requirements

Electricity is required in the HRSR system for auxiliary equipment, diagnostic instrumentation and illumination. The total electric power requirement is 1242 KVA. A breakdown of the electric power requirements is as follows:

. 460 VAC, 3 phase, 60 HZ

Boiler Circulating Pump	155 KVA
Boiler Feed Pump	259 KVA
F.D. Fans	21 KVA
Electric Air Heaters	169 KVA
Condenser	78 KVA
Subcooler	21 KVA
Ash Handling System	87 KVA
Precipitator	45 KVA
Total	835 KVA

. Nominal 220 VAC, 3 phase, 60 Hz

Diagnostic Instrumentation	96 KVA
Illumination	7 KVA
Total	103 KVA

. 115 VAC, 1 phase, 60 Hz

Diagnostic Instrumentation	304 KVA
115 VAC Total	304 KVA

TOTAL ELECTRIC POWER 1242 KVA

6.2.2. Cooling Water for Channel and Diffuser Simulator

The channel and diffuser simulator will require 360 gpm of cooling

water for heat removal. Cooling water will be supplied to the barrel at a rate of 240 gpm and to the nozzle at a rate of 120 gpm. The maximum water temperature rise through the barrel and nozzle will be 30F and 50F, respectively. The conditions of the cooling water will be 150 psia and 90F.

6.2.3. Make-Up Water for the HRSR Steam Circuit

The make-up water for the HRSR steam circuit replenishes losses from the steam drum incurred during blowdown, the sootblowers and any miscellaneous leaks which are assumed negligible. Demineralized water at the rate of 30 gpm will be required for make-up water requirements. The specifications for the demineralized water are as follows:

Capacity, gpm	30
pH	9.3 - 9.5
Oxygen, ppm	0.007 (Max)
Fe, ppm	0.01 (Max)
Cu, ppm	0.005 (Max)
Total Hardness, ppm	0
SiO_2, ppm	0.02 (Max)
Organic, ppm	0
Total Dissolved Solids,ppm	0.05 (Max)

6.2.4. Ash/Seed Removal

Removal, intermediate storage and disposal of the ash and spent seed will be needed. Equipment to be supplied by B&W will remove it from the HRSR and deliver it to a terminal point where UTSI will assume responsibility for its intermediate storage and disposal.

6.2.4.1. Removal of Wet Ash/Seed

The deasher removes 70 lb/hr of ash/seed from the furnace. The composition of the dispensed ash/seed from the deasher is as follows:

Wet Ash/Seed Composition

ash, % by wt.	57.4
K_2SO_4, % by wt.	9.6
Water, % by wt.	33.0

The deasher requires 200 gpm of cooling water for both cooling and make-up water purposes. Make-up water is added to the deasher to replenish losses incurred from evaporation and water contained in the dispensed wet ash. Cooling water is needed to remove heat from the deasher with a heat exchanger in the closed-loop water recirculation system of the deasher. The conditions of the cooling water are 150 psig and 90F. Maximum discharge temperature of the cooling water is 115F.

6.2.4.2. Removal of Dry Ash/Seed

Dry ash and spent seed is removed downstream of the furnace by suction using air as a transporting medium. The required capacity for the transporting air is 870 SCFM under vacuum. The breakdown for dry-ash removal is as follows:

	LOCATION					
SOLID	SSH	ITAH 1st PASS	ITAH 2nd PASS	PSH	ECON	PRECIP.
Ash, lb/hr	12	6	2	2	1	36
K_2SO_4, lb/hr	699	53	33	35	2	55
K_2CO_3, lb/hr		3	2	2		3
Total, lb/hr	711	61	37	39	3	94

6.2.5. Control Air Supply

The control air supply provides for all pneumatic control devices and associated lines. The specifications for the control air supply is as follows:

Capacity, scfm	100
Pressure, psia	100
Dryness, Dew point in F	-40

6.2.6. Service Air Supply

The service air supply provides 100 psia air as needed for maintenance of the HRSR system. Also, 40 scfm of service air will be required for corrosion probes. The peak capacity of the service air supply is 140 scfm.

6.2.7. Nitrogen Supply

Nitrogen will be needed for sealing doors and sample parts. Also, nitrogen will be required for purging the gas-side of the HRSR before start-up and for filling the enclosure walls of the HRSR system during periods of shutdown. A nitrogen seal prevents air infiltration into the HRSR system. Purging the HRSR before start-up is required to remove any residual combustible gases. Steam side tube oxidation is inhibited by filling the enclosure walls with nitrogen. The required capacity for the nitrogen supply is 120 scfm to be available at 50 psia.

6.2.8. Miscellaneous Cooling Water

Cooling water will be required for the stuffing box and lube oil cooler of the recirculating pumps to remove excess heat. A small amount

of water (2 gpm) will be required to condensed steam leakage from the recirculating pumps. This water comes in contact with the escaped steam in a smothering type gland and is discarded to the sewer. A reserve cooling water capacity is also needed for miscellaneous and intermittent uses such as a clinker grinder. The required capacity for the miscellaneous cooling water is 100 gpm. The conditions of the cooling water will be 150 psig and 90F.

6.3. Hardware Interfaces

Without question, it is financially advantageous for the different test facilities being operated at CFFF to share pieces of equipment wherever possible. The coal feed system is a perfect example. In addition to this, two major pieces of equipment have been identified which can be shared by the 20 MWt HRSR and another test unit. They are the:

1. Electrostatic Precipitator - B&W will supply this unit as part of the contract. However, the flues have been rearranged so that the flue gas from UTSI's test rig in Bay #1 can also flow through this ESP.
2. ID Fan - UTSI will supply this unit. These flues have also been redesigned so that flue gas from both the 20 MWt HRSR and the UTSI test rig in Bay #1 can utilize the fan.

6.4. Scope List and Terminal Points

This section identifies and describes the terminal points and the needed utilities associated with equipment supplied by B&W.

SCOPE LIST	TERMINALS
The equipment to be supplied includes the following:	The interfaces between the HRSR System and The CFFF are as follows:
1. MHD Channel and diffuser simulator consisting of:	
Water cooled nozzle (MHD) Channel Simulator Water Cooled Expansion Chamber (Diffuser Simulator) Supplies, Risers, Piping, Valves, and Fittings	Combustion products enter the Channel and diffusor simulator at the flange joining it to the combustor.
One additional 2' section of expansion chamber for field adjustment	The support steel rests on foundations that are Government supplied. (Supplies, risers, piping, valves, and fittings are within the HRSR System). Cooling water terminals in and out.
2. The HRSR System consisting of:	
Furnace Nitrogen Oxides Test Section Secondary Air Mixing Throat Combustion Test Section	Cooling water, make-up water, plant air, instrument air. The piping for these utilities by Contractor will terminate at a connection located at the present CFFF Test building south wall..
Secondary Superheat Unit Intermediate Temperature Air Heater Primary Superheat Unit Economizer Steam Drum, Downcomer, Supplies Risers, Pumps and Piping	The Contractor vent piping will terminate above the top of the HRSR.
Two recirculation pumps and drives Blowdown and drain system Blowdown Tank Drain Tank Pump and Drive Piping, Valves and Fitting 25 Access Doors 40 Observation-sample ports	Nitrogen piping by Contractor will terminate at the Government furnished nitrogen bottle station.
3. Sootblower System Consisting Of:	
36 Sootblowers Piping, Valves and Fittings Controls	

Scope List (Continued)	Terminals (Continued)
4. Air and Flue Gas Systems Consisting of:	
Forced draft fan and drive Two electric air heaters for preheating air Tubular air heater test Section Regenerative Air Heater Test Section Flues, ducts, dampers, and expansion joints Electrostatic precipitator including transformer-rectifier sets Controls	Equipment foundations -- the Contractor furnished equipment (fans, pumps, motors, tanks, heat exchangers, etc.) Will be installed on Government furnished reinforced concrete foundations. Exhaust flue -- the HRSR System exhaust flue following the precipitator will terminate at the precipitator outlet. The power supply for the precipitator is within the Electrical Distribution System below.
5. Ash and seed disposal system including:	
Ash and Slag receiving and holding tanks Deasher bath, belt, and drive Heat exchanger and pump Clinker grinder, and drive Piping, Valves, Fittings and Expansion Joints	Water for the deasher will be taken from the CFFF System. The ash/seed from the deasher will be terminated at the end of the conveyor belt. Suction air for dry-ash demand will be taken from the CFFF System.
6. Feedwater system consisting of: Chemical Feed System Feed Drive Valves, Fittings, and Expansion Joints	Make-up water will be taken from the CFFF treated water system.
7. Heat Rejection System consisting of:	
Air cooled steam condenser complete with subcooler, fans, drives, dampers Condensate Storage Tank Flash Tank Piping, Valves, Fittings, and Expansion Joints	The blowdown tank will discharge hot water at atmospheric pressure to the CFFF sewer system.

Scope List (Continued)	Terminals (Continued)
8. Miscellaneous piping, valves and fittings required to connect the Government supplied combustor system to the utility header supply system located in Bay 3 of the existing test building	The piping supplied by the Contractor will interface with Government supplied piping systems at the south wall of the CFFF Test building.
9. Brickwork, refractory, insulation and lagging:	
Refractory for furnace Insulation as required for the channel simulator, HRSR System precipitator, heat rejection system, feedwater system, air and flue gas system, piping, valves and fittings. Lagging to cover the insulation	Piping requiring insulation will be insulated and lagged up to the piping terminals described above.
10. Structural Steel including:	
Main support steel and column base plates Hangers and supports Platforms and platform steel Stairways Handrails Kickplates	The structural steel with base plates will terminate at ground level or reinforced concrete foundations, including anchor bolts provided by the Government.
11. Electrical Distribution Systems for Motors	The electric power feeder will terminate with two (2) power cables with the required voltage at a Government furnished transformer located in the existing test building. Ground loops will terminate at two existing ground loop locations on the periphery of the HRSR System support steel.
12. Air Cooled Corrosion Probes Consisting of: 8 Corrosion probe and samples Temperature control system and valves	The corrosion probes will require a supply of 100 psi station air for cooling. The interface will be at the control valve for each probe.

Scope List (Continued)	Terminals (Continued)
13. Spare parts	To be identified by Contractor during detail design effort
14. Plant Lighting Fixtures Cable and Conduits Circuit Breakers Transformer	
15. Materials included for Modifications to the HRSR System:	
1 Additional 2' long MHD channel and diffuser simulator section	Additional Equipment to be used where indicated.
72 Additional Secondary Furnace Boiler Tubes	
2 Additional Secondary Superheater Platens	

7.0. Operation and Maintenance

The operation of the HRSR boiler involves practicing safety precautions to avoid personnel injuries. Proper care of the equipment is required before and during operation. Operating procedures are provided to protect the boiler and its equipment from corrosion, overheating, and excessive thermal stresses. Routine inspection and preventive maintenance are required to prevent tube failure and boiler shutdowns.

The objective of this section is to address these areas of concern. It consists of (a) operator's responsibility, (b) personnel safety, (c) preparation for start-up, (d) start-up and shutdown, (e) normal operation, and (f) maintenance.

7.1. Operator's Responsibility

The HRSR boiler operator must recognize and accept the responsibilities placed on him not only for the successful operation of the boiler and its related equipment but for the safety of all personnel involved. To be prepared for all situations in the boiler operation, the operator must be trained to understand the boiler's design, its purposes, limitations and the relationships among the components. This knowledge can be obtained only by thoroughly inspecting the unit, and by studying all operating instructions and drawings.

7.2. Personnel Safety

Plant personnel must be trained to operate the boiler and its

equipment within safe margins. Rules and devices are provided for personnel protection. Based on B&W's experience in boiler operation, the precautions listed below involve personnel safety.

A. When viewing flame or furnace conditions, always use a full face mask with full tinted glass to protect the eyes and face from hot gases, harmful light rays, slag and ash particles.

B. Do not stand in front of open doors or ports. Furnace pulsations caused by firing conditions, sootblower operation, or tube failure can blow hot gases out open doors, even though the HRSR furnace is operated with the induced draft fan.

C. Do not use open-ended pipes for rodding observation doors, ports, or slag on furnace walls. Hot gas can be discharged through the open-ended pipe directly onto its handler. The pipe can become extremely hot.

D. Never enter a vessel, especially boiler drums, until all steam and water valves, including drain and blowdown valves, have been closed, locked, and tagged. It is possible for steam and hot water to back up through drain and blowdown piping. Vent valves are connected to a nitrogen system. These valves must be closed, locked, and tagged.

E. Do not enter a confined space until it has been cooled, purged of combustibles and dangerous gases, properly ventilated, and precautions are taken to keep the entrance open.

Station a man at the entrance, notify a responsible person, or run an extension cord through the entrance.

F. Use low voltage extension cord or cords with properly connected grounds. Bulbs on extension cords and flashlights should be explosion proof.

G. Never open or enter rotating equipment until it has come to a complete stop and its circuit breaker is locked open. Some types of rotating equipment can be set into motion with very little force. This type should be locked with a brake or locking device to prevent rotation.

H. Be prepared for falling slag and dust when entering the boiler setting or ash pit.

I. Never step into fly ash. It can be cold on the surface yet remain hot and smoldering underneath for weeks.

J. Always secure the drive mechanism of dampers, gates, and doors before passing through them.

K. Be prepared for hot water in drum and headers when removing manhole and handhole covers.

L. Never use toxic fluid in confined spaces.

M. Be prepared for slag leaks. Iron oxides in coal can be reduced to molten iron or iron sulfides in a reducing atmosphere in the furnace as a result of sub-stoichiometric combustion. The molten iron will wash away refractory, seals, and tubes.

N. When handling any type of rod or probe in the furnace, be prepared for falling slag striking the rod or probe. The lever

action developed can inflict severe injuries.

O. Never direct an air or water stream into ash pile in a confined area. If the ash is smoldering underneath, the agitation could result in an explosion.

P. High Voltage Danger

The voltages used in electrostatic precipitators are extremely dangerous. Contact is not necessary to receive a fatal shock because arcs up to 8 in. can be drawn from any high voltage part. Besides the operating danger, static charges can remain in the high voltage system long after the electrical equipment has been de-energized. Due to these dangers, it is important that proper shut-down and grounding procedures be followed before entry into any hazardous area.

As part of the supplied electrostatic precipitator safety equipment, a key interlock system is provided. This system limits access to hoppers, rapper compartments, roof girder insulator compartments and the precipitator casing until operating personnel complete a predetermined shutdown procedure.

The procedures for proper shutdown in preparation for entering the precipitator are:

1. De-energize all T-R controls for a casing and lock the controls in the "off" position.
2. Transfer and lock all transformer rectifier high voltage switches in the ground position.
3. At this time, the designated grounding doors can be

opened; then, as the local warning signs indicate, grounding cables should be attached to each electrical bus section before remaining doors are opened. This cable should remain attached until the operators are ready to "close" and "lock" the access doors.

To install properly the grounding cables, the welding connector is first attached to the receptacle mounted on the precipitator casing. Then, with an insulated pole, a clamp is secured to a grounding loop on the high voltage system.

Q. Rapping Systems/Heating Systems

The key interlock system and grounding system procedures described above will provide operator protection from high voltage and static charge. However, since the various rapping and heating systems used in the precipitator are not interlocked with the main power supply, these systems must be de-energized separately before entering any part of the precipitator.

If, for check-out or maintenance purposes, the heating and/or rapping systems are energized while access doors are unlocked, all doors should be tagged accordingly. When entering, exercise caution when approaching any rotating rapping system or any energized heaters on hoppers or ground insulators.

R. Explosion Danger

Although there are no documented cases of gas side explo-

sions originating in an electrostatic precipitator, it is recommended that all sources of sparking be eliminated when explosive mixtures may be present. Accordingly, it is suggested that the precipitator power supply system be tripped on a boiler master fuel trip and that re-energizing of the precipitator be delayed until the boiler master fuel trip is reset.

S. Hot Ash

Fly ash will stay hot long after the precipitator is cooled. Extreme care should be exercised when entering any area of the precipitator or flues that may contain heavy accumulation of fly ash.

To prevent a deluge of hot hopper ash from hoppers filled above the access door elevation, safety bars have been provided on all hopper doors. This bar should be positioned in front of the door before attempting to open the door. Raise bar only after making certain there are no ash accumulations behind the door or bridged across the hopper above the door elevation.

T. Ozone Hazard

Electrostatic precipitators generate some ozone which, during normal operation, is heavily diluted with the combustion gases so that it is not considered hazardous. However, if the precipitator is kept in operation with either very low gas flow or under natural draft conditions, the resulting ozone concentration could be sufficient to irritate the eyes and the upper respiratory system, and cause headaches or nausea. The

effects will disappear after leaving the exposure area.

The presence of ozone can be detected, even at extremely low concentrations, by its pungent, sulphur-like smell.

To avoid exposure, the following precautions should be observed:

1. Before entering the precipitator, connecting flues or other equipment installed near or downstream of the precipitator, make certain the precipitator power supply systems have been shut down. If ozone odor is detected, delay entering until the equipment is purged.

U. Noise Levels

The combustor, the channel, the sootblowers, the forced draft fans, the pressure-reducing throttling valves, and the safety valves are expected to be the major contributors of noise in the 20 MWt HRSR. The combustor and channel are expected to be the noisiest, although their noise levels cannot be determined at this time. In conventional plants, sootblowers in conjunction with other pieces of equipment have contributed as much as 120 dB to the noise level 3 feet from the equipment surface, although the sootblowers are operated intermittently. Distance from the noise contributor is a major factor in determining noise levels. In any event, ear protection (earplugs, earphones, etc.) is strongly recommended when the HRSR is operating.

7.3. Preparation for Start-Up

Proper preparation for start-up is important to insure safe boiler operation. The equipment as erected is checked for its proper installation, tube spacing, and alignments. All expansion joints, tube guides and

supports are checked to avoid obstructions that may result from thermal expansion. All temperature, pressure and level indicators are inspected for their proper function. To insure the sustained operating of the heat transfer equipment, all heating surfaces are cleaned before the boiler is put in line.

This section describes (a) inspection and checkout of equipment, and (b) cleaning of heat transfer areas.

7.3.1. Inspection and Equipment Check Out

7.3.1.1. HRSR Furnace

A. The primary purpose of the HRSR furnace is to provide a gas tight enclosure to contain and cool the combustion gas. Also, since the combustion gases entering the HRSR furnace contain combustibles, the furnace must provide the following conditions to completely burn the fuel values:

1. Temperature to support combustion.
2. Turbulence to bring air into contact with the unburned fuel.
3. Time in the high temperature and turbulent zone for combustion to be completed. (This is sometimes referred to as "the three T's" of furnace design.)

B. The following conditions must exist before operation begins.

1. Since the HRSR boiler unit is operated under negative pressure, the furnace and boiler enclosure should not permit air infiltration. Air that bypasses the secondary combustion zone constitutes a reduction in combustion efficiency. It can also cause early combustion of CO and disturb NO_x decomposition studies and data.

2. All doors and ports must close tightly. Sealing nitrogen gas should be used when the doors and ports are closed to prevent pluggage of the aspirating jets, to keep the doors cool, prevent leakage if gaskets do not seal properly, and to keep fly ash out of the ports.
3. All temporary scaffolding, bracing, cribbing, blocking, and debris must be removed to prevent expansion restrictions and to prevent combustible debris from burning at uncontrollable rates or igniting explosive mixtures of unburned gases from the main fuel equipment.
4. All insulation must be applied to insure that all pressure parts and ties are at a uniform temperature that will prevent thermal stresses.
5. Water seals must be filled with water.
6. Ash and slag pits, designed for water, must be filled.

7.3.1.2. Steam Drum

The steam drum separates the steam-water mixture rising from the generating tubes using the internal baffling which is in the form of cyclone separators, scrubbers, and dry pans.

Before operation begins, the steam drum internals should be inspected to be sure that they are installed according to the contract drawings. All baffle joints and cyclone flanges must be tight. The cyclones must impart the correct rotation to the steam-water mixture; clockwise and counterclockwise cyclones cannot be interchanged. Gage glasses, or other water level detecting devices, should be checked for accurate measurement of the drum water level during initial filling of

the boiler. During initial drum inspection, be sure all connections to water level detection and control devices are unobstructed.

7.3.1.3. Gage Glasses

The water level in the HRSR boiler must be within certain limits during operation and must be so indicated to the operator. The gage glass, when correctly installed and maintained, shows the actual water level in the steam drum.

Gage glass observation must be unobstructed. The glass should be viewed easily either by direct line-of-sight, a suitable mirror system or a properly functioning closed-circuit television system. Where light reflection on the water level is used to improve the visibility, illumination should be properly adjusted. Bi-color glasses, which use the difference in refractive index of steam and water to show red for steam and green for water, must have the illumination and color screens properly adjusted.

7.3.1.4. Safety Valves

Safety valves are used to relieve excessive boiler steam pressure. The total capacity of all the safety valves on the boiler must be sufficient to relieve the design steam flow of the boiler.

The safety valve manufacturer's recommendations should be followed when installing the valves. Specific attention must be given to the vent piping, vent piping supports, and drains to prevent placing a strain or back pressure on the valve, which can affect its operation. Any change in the cross sectional area of the vent pipe, including bends or tees into other piping, even though complying with the letter of the code, can result in excessive back pressure on the safety valve. This

back pressure will cause steam emission from the drip pan creating a personnel hazard. Vents should discharge in a location and direction which will prevent injury to personnel.

Each safety valve should be tested for proper popping and reseating pressures immediately after firing the boiler up to full operating pressure for the first time. When testing safety valves, the personnel involved should maintain a safe distance from the safety valve, especially during the initial test or after repairs, to prevent injury in case of a malfunction of the valve or piping. If adjustments are necessary, they should be made in accordance with the manufacturer's instructions. If the safety valves are adjusted after the boilout period, be sure that the boiler water is at normal chemical concentrations and level to prevent priming and carryover of chemicals to the safety valves.

7.3.1.5. Pressure Gage

A requirement of the ASME Boiler Code is that at least one pressure gage should be connected to the steam space of the drum. It should be calibrated over the full scale range, visible to the operator at all times, and be in service at all times.

To protect the steam gage from direct contact with steam, a small loop is always installed near the gage in the connecting piping to the steam drum. This loop is called a siphon or a pigtail. It must be filled with clean water or condensate.

Since the steam gage must be visible to the operator at all times, it is normally located at an elevation below the steam drum and

connected to the steam drum with a line sized for boiler design pressure. The steam gauge will indicate the correct pressure only if the gauge is compensated for water leg and the connecting line is filled with water.

7.3.1.6. Drains, Vents and Blow-Off Valves

Drains for emptying the boilers are normally connected to blowdown tanks which are designed to handle high pressure hot water and steam.

Manual blow-off valves on the drum of the HRSR boiler are opened intermittently to control boiler water chemistry. Instructions of the valve manufacturer should be consulted for the proper procedure. It is important that the drain valves should not be operated to blowdown the furnace circuits if the boiler is producing steam.

Vents are installed at the highest point on the boiler to vent air or nitrogen from the boiler while filling and raising pressure. Vents are also used as vacuum breakers while draining the boiler.

The blow-off valves, as required by Code, may be used if necessary for controlling drum swell. If drum swell cannot be corrected immediately, reduce firing until stable water level is obtained or remove unit from service. For the HRSR boiler, the blow off valves should be closed when gas temperature exceeds the low flow superheater protection limit, or the drum pressure exceeds 750 psig.

7.3.1.7. Feedwater Pumps

A motor driven feedwater pump of sufficient head and capacity is provided to supply water to the boiler. Manufacturer's instructions

should be consulted for information on alignment, lubrication, shaft seals, and method of controlling feedwater recirculation through the pump to prevent overheating and cavitation during low or no flow periods.

7.3.1.8. Fans

The HRSR system is equipped with two air fans, one for secondary air and the other for the test air heaters. Special instructions from the manufacturer should be consulted for bearings and coupling alignment, lubrication, shaft seals, expansion joints and cooling water connections to water cooled bearings.

7.3.1.9. Dampers

The flow of gas or air is regulated by control dampers in ducts and flues. Control dampers do not necessarily close tight. Stops may be installed to prevent them from closing completely. Shut-off dampers, on the other hand, are designed for tight seating against flexible sealing strips. They are not used as control dampers but to seal off high temperature flue gases or air.

Before starting up the unit, all dampers should operate as intended. Certain necessary conditions must exist for proper operation, namely:

A. All debris removed.

B. Control mechanisms and drives connected and adjusted.

C. Clearances provided for expansion.

D. Position indicators adjusted or ends of shafts marked to show actual position of dampers.

E. Minimum stops adjusted.

F. Sealing strips or stops adjusted.

G. Seal air applied to shaft seals.

H. Bearings lubricated.

I. External damper shaft bearings should not be insulated.

7.3.1.10. Flues and Ducts

A duct is a conduit through which combustion air is transmitted. Flues are the conduits through which the gaseous products of combustion are conveyed. Ducts conveying cold air are normally not insulated, but flues and ducts conveying hot gases or air are insulated. Before operating a boiler, the flues and ducts must be inspected inside and out for the following items:

A. All bracing, cribbing, and debris must be removed.

B. All flues and ducts should be gas and air tight.

C. All support rods and spring hangers should be adjusted.

D. Expansion joints should be free to expand.

7.3.1.11. Stop Valves and Check Valves

Stop valves are located in the boiler feedwater supply line and in steam outlet lines to permit isolating the boiler from other equipment. A check valve is also located upstream of the feedwater stop valve to automatically prevent the backflow of boiler water if the boiler feed pump fails.

Vendor's information should be consulted for proper valve controls

before operation begins.

7.3.1.12. Boiler Expansion

Serious damage can occur to the boiler and its components if they are not permitted to expand as intended. The pre-start-up inspection will insure that nothing interferes with free movement in the prescribed direction. Remove all temporary scaffolding, bracing, and ties. Remove all debris from expansion joints and water seals at the ash hopper or slag tank. Since the boiler is top supported, all hanger rods should be checked to carry load. Any steam lines, flues, ducts, and windboxes that are supported separately should not impose a load on the boiler.

Sliding supports and guides must permit the prescribed expansion away from any fixed supports.

Continual observation should be made of boiler expansion during the initial operation of the unit. This period should include operation at full pressure and full load and also one pressure reducing period. The causes must be determined for any deviations from expected expansion and the necessary corrections made. Cracked tubes, cracked drums, and torn casing are some of the results of restricted expansion.

Boiler expansion in itself is not a technical concern with respect to scale-up to a large size plant. The state-of-the-art in this area is well developed, and, therefore, no provisions have been made to measure boiler expansion on the HRSR system. The expected expansion allowances for the boiler and the HRSR components are discussed in Section 3.1.1. of this report.

7.3.1.13. Economizer

Before entering the steam drum, the feedwater passes through the

economizer where heat is recovered from the flue gases leaving the boiler. The temperature of the feedwater is increased. The economizer is arranged for counterflow with flue gases flowing down in two passes.

Both internal and external corrosion are possible in the economizer if the contributing conditions exist. Internal corrosion can be prevented by maintaining the feedwater at a pH of 8 to 9 and the dissolved oxygen content at zero. This involves the use of the oxygen-free makeup water and the injection of chemicals into the closed system for oxygen scavenging and pH control.

External corrosion is a function of the sulfur and moisture in the fuel, seed, and economizer metal temperatures. Maintaining metal temperatures above 250 F should prevent external corrosion. For all practical purposes, the economizer metal temperature is the same as the water temperature. Therefore, metal temperature is maintained by feedwater temperature control. It must be remembered that external corrosion is to be studied in the HRSR unit since all the answers are not known.

Sootblowers are supplied to clean the economizers on the coal fired losses across the economizer and gas temperatures leaving the economizer are affected by deposits in the economizer and may be used as guides or indications of plugging. The pre-start-up check of the sootblowers includes proper alignment of blowing nozzles, proper lubrication, and inspection of their general mechanical integrity.

7.3.1.14. Sootblowers

Ash, slag, and soot deposits on the tubes act as insulators to prevent the transfer of heat to the boiler, superheater, intermediate temperature air heater, economizer, and low temperature air heaters, and in sufficient quantity, restrict the flow of the flue gas. Therefore,

keeping the gas side clean is one of the most important steps that can be taken to maintain heat transfer rates and draft losses.

The retracting type sootblowers used on the HRSR unit are prevented from overheating while in the gas stream by the use od steam as a blowing medium. Retracting blowers are used for cleaning of convection passes.

The operating instructions and drawings supplied by Diamond Power Co. should be consulted before adjusting and operating the sootblowers. Some of the major items requiring attention are controls, supply pressure, blowing pressure, drainage, expansion, alignment and lubrication. The remote control system requires adjustments before service. It is important to make sure that the manual retracting mechanisms of sootblowers are in working order in case of power failure or control failure so that the sootblower will not be damaged from overheating.

The blowing system has a reducing station and relief valve to prevent excessive pressures on the low pressure sootblower piping. This equipment must be adjusted to obtain the correct supply pressure.

Since dry steam is used as the blowing medium, provisions are made to prevent moisture from reaching the blowing element at all times. Supply lines are sloped to drain the moisture away from the sootblower and back into the supply header where a steam trap is provided at the lowest elevation to prevent condensation from filling the header.

Since steam is used as a blowing medium, all steam line insulation must be checked to prevent operating personnel from being burned on the hot steam lines and to minimize steam condensation.

Expansion loops are provided in the supply piping to prevent ex-

cessive strain on the sootblowers due to differential expansion between the piping and the boiler. Room for expansion between the sootblower and the building steel must be checked. Boiler expansion must also be checked where retracting sootblowers are supported from the building steel.

7.3.1.15. Superheaters

The superheaters are designed to simulate the commercial boiler's operating temperatures and pressures in the MHD gas environment. The seed condensation and fouling of the secondary superheater's tube banks could be severe. Pre-start-up inspections, calibrations, and adjustments should cover proper tube alignment, sootblower alignment, adequate provisions for expansion of superheater loops and headers, removal of debris from both the gas side and steam side, and assuring control of any attemperator.

7.3.1.16. Intermediate Temperature Air Heaters

The ITAH is designed to use steam instead of air inside the tubes to simulate the tube metal temperature in order to collect gas side corrosion, tube fouling and slagging data. Since the ITAH is essentially a bank of superheater surface operating at lower pressure, the pre-start-up inspections, calibrations, adjustments, and precautions are similar to the secondary superheater.

7.3.1.17. Tubular Air Heater

The tubular air heater should be prepared for service by checking the following items:

A. Cleanliness

An inspection of the tubes and ductwork should be made to see that all are free of construction debris, such as rags, boards, etc.

B. Construction and Expansion

Both the gas and air passes should be inspected to see that baffles are correctly installed and joints sealed. Expansion joints should be checked for clearance, and any obstructions to the free movement of the heater should be removed. All dampers controlling gas and air flow through the air heater should be checked for satisfactory operation and the damper blade positions marked on the shafts.

C. Instrument Connections

Connections such as draft gages and temperature elements should be checked for proper location and installation.

D. Air Heater Cleaning Devices

Sootblowers should be checked for proper alignment of blowing nozzles, proper travel and general mechanical condition. Lubrication should be done where required.

7.3.1.18. Regenerative Air Heater

The regenerative air heater as erected should be checked for surface cleanliness, proper alignment of the retractable sootblowers, expansion joints, and control dampers.

7.3.1.19. Electrostatic Precipitator

Prior to initial start-up of the precipitator, a thorough inspection should be made of all equipment and a series of preliminary checks and tests conducted on all systems. These pre-start-up procedures are outlined below in a normal sequence to be followed on a typical installation.

A. General Inspection

The precipitator as erected should be properly aligned and ready for all initial operating procedures. To confirm this, a thorough inspection should be made as a general check of overall completion of all erection requirements. These inspections should include the following:

1. Internal Electrical Clearances

Actual electrical clearance between electrically charged components and grounded parts of the precipitator to be at or above minimum values shown on applicable internal arrangement drawings. Main areas to be checked are as follows:

a) Discharge frames to collector plates.

b) Discharge frames to collector curtain alignment

devices.

c) Discharge system supports in roof girders.

All temporary erection supports are to be removed in areas where these could result in premature sparking or a complete short circuit in the high voltage system.

2. Insulators

All support, shroud and rotating insulators should be inspected for damage. Cracked or heavily chipped insulators may short out or fail prematurely.

Inspect all insulators for surface cleanliness and clean as required. Dirty surface may provide a high voltage path to the ground.

3. Expansion Provisions

The precipitator is bottom supported on sliding support feet at the top of support steel elevation. These sliding feet allow for thermal expansion of the precipitator on the support steel. The precipitator casing will also expand in the vertical upward direction. To make certain that expansion movement will not be restricted, the following checks should be made:

a) Temporary erection bolts or stops on the support feet should be removed.

b) All other structures attached to the precipitator such as platforms, stairways, ladders, and cable trays should be checked for adequate expansion provisions at the

attachment locations.

4. Grounding System

Check that the precipitator casing is properly grounded to the support steel and the steel to the ground.

5. Rapping Systems

The following inspections and checks should be made on all rapping systems and drives:

a) All hammers should be in proper alignment with their respective anvils.

b) Verify that all attachment bolts not using self locking nuts are tackwelded.

c) All hammers which have been flipped to the "down" position before gravity would have caused them to fall should be lifted back to their normal "up" position. Hammers that are out of their normal position may jam the entire system once drives are energized.

d) Check oil levels in both the primary and secondary gear units of the rapper drive speed reducers.

e) Remove shear pin or drive chain and check rapper drive units for proper direction of rotation. Do not operate the drive coupled to the rapper shaft until proper rotation is determined since reverse rotation will jam and possibly damage the equipment.

6. Accessory Equipment

Check for proper installation, lubrication and direction

of rotation, as applicable, on all accessory equipment supplied as part of the total installation.

B. Preliminary Tests and Adjustments

1. Rapper Systems

With the mechanical check-out of all rapper systems complete, make a test run on all systems and check for continuous operation. Adjust both "on" and "off" timers in the collector plate rapper circuit using data listed in the General Data Section. Adjust alarm timers to a setting of five seconds longer than the "off" setting for the particular system.

When entering the precipitator casing to observe rappers in operation, stay clear of all moving parts and wear ear protection.

2. Key Interlock System

In preparation for the initial energizing of the power supply system, confirm that all quick opening access doors have been equipped with key interlocks. Components should be installed so they cannot be readily removed; i.e., bolts and nuts tackwelded.

Completely check out the entire system by locking all doors and going through the entire sequence up to, but not including, the transformer grounding switches.

3. Power Supply System

CAUTION: Before energizing any power supply system, make

certain all personnel are out of the precipitator and clear of all high voltage equipment. Verify that all maintenance access bolted doors are in place. Remove all portable grounding cables and proceed to lock all quick opening access doors. Follow the established start-up sequence for the key interlock system. Do not attempt to make any of the following high voltage system checks without the key interlock system in full service.

As a separate procedure or in conjunction with the Air Load Test (see item "C" below), adjust each T-R control overload and current limit. Fill and check setting of overload dash pot or other overload device to the identified current value. Adjust current limit control at the rated primary current value of the transformer-rectifier. Follow instructions issued by the T-R and control manufacturer for placing this equipment in service and establishing all initial settings.

4. Heating Systems

Adjust the thermostatic control devices on the hopper heating and insulator heating systems to their proper initial settings and energize all systems. Conform actual operation by checking current flow at each circuit.

5. Purge Air/Sealing Air System

a) On negative pressure installations, check that all vent

connections are open to atmosphere.

b) On installations equipped with seal air fans, check fans for proper rotation. Adjust control damper to maintain motor current at approximately 80% of rated for the initial setting. Lock damper in position. Adjust control and alarm pressure switches, as applicable.

6. Hopper Level Detectors

Make initial settings and adjustments following the manufacturer's midpoint setting and check operation of all vibrators.

C. Air Load Test

As part of the electrical check-out of the precipitator and its controls, an "air load" test is performed. This consists of energizing the precipitator transformer-rectifier sets with either no flow or with air under natural draft flowing through the casing.

An air load test serves as a good check to insure that the precipitator is ready for operation.

Following the procedures for initial energization of controls described in the operating instructions, each transformer-rectifier set is energized. Primary current is manually increased to the current rating of the T-R sets with data being taken at several increments. At each test point, primary and secondary voltages and currents should be recorded. The air

temperature inside the precipitator should be recorded for the air test since maximum current obtainable will be greater at reduced temperatures.

Power input levels can vary depending on the type of discharge wire utilized. Power input during the air load test will normally be lower for the pointed strip wire than for the star wire. Power input will also vary with the cleanliness of wires and plates. For these reasons, air load tests conducted after the unit has been in service will only provide a good comparison with the original condition if the plates and wires are clean for such retesting.

Normally, the inability to bring the power up to rated level on any T-R set is an indication that there is a closer than normal gap between discharge wire or frame and the collection plate or any grounded portion of the precipitator. The interference should be removed and the air load test repeated on that T-R set.

Data collected during the initial pre-operational air load test should be filed for future reference.

D. Air Distribution Test

Prior to admitting flue gas through the precipitator, a flow distribution test should be performed at the precipitator inlet. This test will verify that flow distribution is within acceptable industry standards or specific contract requirements.

This test will require the entire boiler system to be closed up and combustion air fan, secondary air fan and induced draft fan available for service. Air flow is increased to the maximum possible while observing limits on system pressures and fan motor loads.

Air velocity readings are obtained in the first precipitator field at established intervals in both the horizontal and vertical direction. A hot wire anemometer or other suitable device is lowered from the roof test compartment and readings obtained and recorded at each test point.

7.3.2. Pre-Start Cleaning

The internal surfaces of the high pressure HRSR boiler must be kept clean to avoid corrosion and overheating of the heat transfer surfaces. To maintain a clean boiler requires constant monitoring of tube cleanliness throughout the operation. This section describes procedures for the initial cleaning of the condensate-feedwater system and the boiler circuits. The subjects to be discussed include (a) flushing the condensate-feedwater systems, (b) boiling out the boiler circuits, (c) steam line blowing of superheaters and intermediate temperature air heaters, and (d) flushing of the simulator's cooling circuits.

7.3.2.1. Flushing of the Condensate-Feedwater Systems

The flushing of the condensate-feedwater system is done to clean the system of any deposit materials and any chemical residuals after

washing of the flash tank and the surge tank. To accomplish an effective flush, flow rates are adjusted as high as possible. Circulation is provided by the boiler feed pump. The surge tank and flash tank are hand cleaned with 2% trisodium phosphate ($Na_3PO_4 \cdot 12H_2O$) solution, followed by the flushing of the system. Service water is satisfactory for this purpose. Strainers are installed at the inlets of the boiler feed pumps to protect them from damage by suspended material.

Flushing begins from the flash tank and continues step wise through the air cooled condenser, surge tank, and subcooler to the boiler inlet. Flushing of each system should continue until the water going to the drain is clear.

All circuits contain branch lines such as drains, vents, instrument connections, etc., and some with bypass lines. During the various cleaning operations, consideration must be given to the isolation, cleaning, or flushing of these branch lines to assure an adequately cleaned system.

7.3.2.2. Boiling Out of Boiler Circuits

The following list comprises the minimum controls, interlocks, and indicates equipment required for operation during the boiling-out procedure;

A. Drum gage glass

B. Boiler pressure gage

C. Safety and relief valves with gage and hydrostatic test plugs removed.

D. Blowdown and drain valves in working order.

E. Thermocouples to indicate air heater gas inlet and outlet temperatures.

F. Steam drum thermocouples.

G. Seal air and cooling water piping connected for operation where such connections are required.

H. Water sampling facilities.

I. Furnace pressure gage.

J. Portable thermocouples to indicate flue gas temperature entering the superheater.

The unit should be filled so that two inches of water shows in the drum gage glass. The filling should be through the feed connections with water from the normal, demineralized supply. The difference between the temperature of the water used for filling the unit and the temperature of the drum should be no more than 70 F.

The chemicals to be used for the boiling-out process should be completely dissolved in water before being placed in the unit. It is desirable to pump the dissolved chemicals into the boiler through the regular chemical feed connection.

A good cleaning job can be done with any of the following combinations of chemicals; the concentrations listed are for the full chemical compounds in terms of all the water in the unit:

A.	Trisodium Phosphate	($Na_3 PO_4 \cdot 12 H_2O$)	5000 ppm
	Caustic Soda	(NaOH)	500 ppm
B.	Trisodium Phosphate	($Na_3 PO_4 \cdot 12 H_2O$)	2500 ppm
	Caustic Soda	(NaOH)	2500 ppm
C.	Trisodium Phosphate	($Na_3 PO_4$ 12 H_2O)	1500 ppm
	Caustic Soda	(NaOH)	2500 ppm
	Soda Ash	($Na_2 CO_3$)	1500 ppm

The economizer, during the boiling out procedure, should be handled in the same manner as during the starting-up period; i.e., the precautions for the operating of the vents, feed valves, etc., (refer to Section 7.4. for startup and shutdown). The superheater should be back-filled with condensate, and the superheater drains should be left closed during the boil out.

Before lighting a fire in the unit, it is important to take the following precautions.

A. Remove all structural timber from the furnace and gas passes.

B. Make connections so that all blow-off and drain valves can be used without danger to the construction or to the operating personnel.

C. See that all dampers are in good working order and that position indicators are correct.

D. Make sure the gage glasses and other means of indicating the water level are in good working order and that they are indicating the correct water level.

E. Start the circulation pumps.

F. Make sure that the fuel burning equipment, temporary or otherwise, is operating in strict accordance with all recognized rules of safety applying to the particular fuel to be used for the boiling out process.

G. Before lighting any fires, completely purge the setting with the combustor air fan for at least five minutes at the rate of approximately one-fourth the requirements for maximum

capacity of the unit.

H. The heating rate must not exceed the safe limits for pressure parts and superheater tube metal temperatures. This heating should be regulated to limit the gas temperature entering the superheater to 1000 F (applicable to superheaters with chromium-alloy tubes). When the limits have been reached, the fires should be extinguished. After a short period of time, approximately 30 minutes, the above procedure should be followed again noting the limits on temperature. This intermittent heating should be continued until the desired pressure of 550 psig is obtained. Once this pressure has been attained, longer periods of time will be required between firing to allow for pressure decay, but the interval should be no greater than every four hours.

The above recommended procedure for boil-out and a good circulation of chemicals with the circulation pumps facilitate the cleaning of the unit.

If gas firing is used, it is important to make sure that the burners are operated at gas pressure at which stable ignition will be maintained; furthermore, it is important to employ every precaution to insure gas pressure regulation or control which will absolutely prevent even temporary lapses in this regulation.

Boil-out pressure for the HRSR boiler is recommended to be 550 psig. Experience indicates that a period of 48 hours at the recommended pressure and chemical concentration is usually sufficient to clean the

unit. The boil-out process continues until the blowdown is clear.

The boiler circuits should be blown-down at least every eight hours. The total amount of water blown-down should be the equivalent of a difference in level of one-half gage glass, divided equally between blowdown points. If necessary, water would be added to the system between the blowing of individual valves in order to hold the level within safe limits. At the end of the blowdown, the water should be brought up to the normal working level and replenished with chemicals to bring the concentration up to the recommended point.

After the completion of the boil-out process, the boiler is cooled slowly to ambient temperature. Drain, flush out, or remove all foreign material. Inspect the unit for cleanliness and preparation for initial operation. If a gage glass is found to be dirty during the inspection, disassemble, clean, and repack the gage glass. Make sure all connections between the gage glass and the drum, as well as the gage glass fittings and the water column drains, are free and clear.

Where only traces of oil or grease remain, such as on tube ends, an additional boil-out is not required, but it is advisable to maintain above normal chemical concentrations and operate at 1/2 to 3/4 rating for several days, blowing down the boiler at least once a shift. If the drum surfaces are coated with deposits that leave the fingers oily when touched, an additional boil-out should follow.

New gaskets should be installed on all manholes and handholes.

The boil-out procedure, handling of gage glasses, pulling-up of gasketed joints, and any other preparations for regular operations are

the responsibility of the operator.

7.3.2.3. Steam Line Blowing

High velocity boiler steam is often used to clean the superheaters and steam lines of any loose scale or foreign material.

All precautions taken for a normal start-up should be observed for steam line blowing. The unit should be filled with demineralized and chemically treated water. Sufficient feedwater pump capacity and condensate storage must be available to replace the water loss during the blowing period.

Blowing pressure used for blowing out the steam lines must not exceed the design pressure of the temporary piping, valves, and flanges. Particular care should be taken when blowing the intermediate temperature air heater to stay within the design pressure. Because of the low design pressure on the ITAH and outlet piping, the blowing medium of low pressure saturated steam or slightly wet steam at high velocities is desired. Velocities above normal operating velocities can be obtained with low pressure steam because of the great change in specific volume of the steam. Besides, a temperature shock along with high velocities is required to loosen scale inside the steam piping. In selecting the blowing pressure, it must be remembered that high velocities are easily obtained with low pressures but changes in drum water level, on the other hand, are minimized if higher blowing pressures are used.

Temporary exhaust piping is attached to the steam line upstream of the air cooled condenser so that loose material can be blown into the

atmosphere without entering the condenser. There are certain items that must in incorporated in the design of the temporary piping and valving. A valve must be provided for controlling the blowing rate. The temporary piping, valves, and flanges must be designed for the pressure used during the blowing periods. The temporary atmospheric exhaust must be braced to withstand the strong nozzle reactions created during the blowing period. The nozzle must be directed so that personnel and equipment are not endangered by the debris discharged at high velocity during the blowing period. The temporary exhaust piping should be at least as large as the existing steam piping so that steam flow is not restricted.

The procedure for blowing is to raise the boiler pressure to a value slightly below the design pressure of the temporary piping, and gradually open the steam regulating valve while increasing the firing rate to maintain pressure during the blow. When blowing has been completed, gradually close the regulating valve while reducing the firing rate.

The steam blowing is generally accomplished in the following stages:

A. Blowing the superheater and main steam lines.

B. Blowing the intermediate temperature air heater and lines.

The color of the steam discharge to the atmosphere can be used as an indication of the debris being removed from the piping. The abrasions of polished steel coupons attached to the end of the exhaust piping may be used as an indication of the amount of debris removed during the blowing operation. These coupons can be inspected for

progressive abrasion after each blow or they can be replaced after each blow.

After the steam line blowing is completed, all temporary piping, valves, and flanges must be removed for normal boiler operation.

7.3.2.4. Flushing of Simulator's Cooling Circuits

A pre-start flushing of the channel and diffuser simulator's cooling circuits is required to insure proper circulation and cooling during operation. Loose materials and debris lodged in the circuits during fabrication and erection are flushed with treated water.

The nozzle of the simulator consists of eleven plates, each plate containng its individual cooling loop (see Appendix B). During flushing, treated water of 150 psig pressure flows from a supply header through separate connecting hoses to the inlets of the nozzle plates. The flush water completes its loop inside each plate and exits to the return pipe. The flush rate is 10 gpm for each nozzle plate.

The channel simulator is constructed of four sections in series. Each section is formed by four plates (see Appendix D). Each plate is individually flushed with treated water at 30 gpm. Flushing of each plate continues until the water to drainage is clear.

7.4. Start-up and Shutdown

The start-up and shutdown procedures of the HRSR boiler consist of steps to prevent excessive thermal stresses to the steam drum and its pressure parts, and to avoid overheating the heat transfer equipment.

The proper start-up and shutdown procedures of the boiler follow:

A. Start-Up

1. Fill the system with nitrogen, displacing as much of the air in the system as possible. Since this system does not include a deaerator it is important to keep oxygen out of the system.

2. Fill the system with treated oxygen-free water from the UTSI storage tank. The water must be within 70F of the steam drum metal temperature. Water colder than 70F should not be used since cold water may cause thermal stresses in the steam drum. The drum should be filled to about an inch from the bottom of the gage glass even though the normal water level is at the centerline of the drum. This will minimize the amount of water wasted when the water swells during heating. After filling, close all vents.

   Since water level recorders are not normally compensated for pressure, the gage glasses give the only true indication of water level. The gage glasses must, therefore, be in service with their isolating valves open and their drain valves closed.

3. Start Circulating Pumps. Both pumps should be in service during operation. During start-up both pumps should be operated to reduce the motor horsepowers which will be high when pumping cold water.

4. Start feed pump.
5. Purge unit. The combustor air fan should be used to purge the system. Be sure that the purge air flows through both air heaters and through the economizer as well. A minimum of five complete air changes should be made before firing begins.
6. Open economizer recirculation valve. Damper out air heaters that will not be used for test.
7. Set valves in start-up mode. Open SV-6, WV-1, SV-5, SV-4, SV-3, SV-1 and SV-2. Also vents on the surge tank and drains on the condenser should be opened.
8. Begin pressure raising. Using either the combustor or the combustor air heater or both, begin heating the unit. Care must be exercised not to exceed gas temperatures above 1000F entering the secondary superheater. If gas temperature is high, secondary combustion air may be used to temper the gas. Also saturation temperature rise limit must be maintained as well as drum differential temperature limits. These limits are given in Figure 7-1 of Section 7.4.1.1., Steam Drum.

When drum pressure reaches approximately 50 psig, close the vents and drains, and put the condenser in service on pressure control at approximately 60 psig. Close valve WV-1 and set on automatic level control. Close SV-3 and set it on temperature control. Close SV-5 and set on flash tank pressure control. (Refer to

Figure 3-15 in Section 3.2. for valve locations.) Raise the set point on the condenser pressure slowly to 100 psig.

At drum pressure of 200 psig, put SV-6 on drum pressure control, maintain balanced flow through the ITAH and through the superheater by manipulation of SV-1. Continue pressure raising by increasing the set point for SV-6.

At drum pressure of approximately 1400 psig, bring pressure in SSH up to 1300 psig on hand control of SV-2 and put the valve on automatic. By this time, trapped water in the SSH should have boiled out. This is indicated by a jump of approximately 60F above saturation temperature for all the individual tube outlet thermocouples. When this occurs, gas temperature may be allowed to increase at the entrance to the SSH platen. The saturation temperature rise limit at the drum is still in effect, however. Close the economizer recirculation valve.

The attemperators of both the superheater and intermediate temperature air heater should be in service at this time.

Continue raising pressure using SV-6. When the secondary superheater outlet temperature approaches its 1000F set point, put SV-1 into automatic temperature control. At this time, SV-4 is set on temperature control at approximately the temperature that is being maintained

so that flow is not unbalanced. Full temperature of 1200F at the ITAH Will probably not be reached until 80% of full steam flow is reached. All valves are now in the normal operating mode. Continue bringing up pressure with SV-6.

9. Bring combustor into full operation as desired.

B. Shutting Down

1. Trip the combustor coal supply and shut off the combustor air heater.
2. Continue combustor air flow and secondary air flow for shutdown purge.
3. Maintain water level and circulation pumps until the saturation temperature reaches about 300F.

   CAUTION: Observe the shutdown saturation temperature decrease limits of 100F/hr to prevent over-stressing the drum.
4. When system pressure reaches about 10 psig, admit nitrogen to prevent leakage of air into the unit. Maintain nitrogen blanket at approximately 10 psig during outages.
5. During outages in cold weather, the secondary air heater, the secondary air fan, and the circulation pumps should remain in operation to keep the boiler setting and tube banks containing water and steam condensate above the freezing point. The external steam lines, water lines, flash tank and the surge tank are electrically traced. The means to protect the air-cooled condenser and sub-

cooler are to be specified by vendors.

7.4.1. Precaution and Equipment Protection

7.4.1.1. Steam Drum

The high operating pressure of the HRSR system requires high quality water to fill the steam drum. (Reference to Table 1 of Section 7.6.3. for water quality limits). The drum should be filled only until water is showing in the bottom of the gage glass. This allows for natural swelling of water on heating of the boiler and will lessen or obviate the blowdown to hold the water level below the top of the gage glass upon continuous heating.

During the start-up, the limits on rate of saturation temperature change and top-to-bottom drum differential are dictated by the requirements of (a) protecting the joints between pressure and non-pressure parts, and (b) limiting the effects of drum humping on all pressure part connections to the drum. Figure 7.1 illustrates the rate of saturation temperature change versus the total saturation temperature change. For a cold start from 100F to 685F, which is the steam saturation temperature at the operating pressure of 2800 psi, the saturated temperature change should be limited to 200F/hr at the total change of 585F. If a hot start with a total saturation temperature change of less than 100F, the rate of change for saturated temperature can be as high as 400F/hr. As a measure to prevent tube corrosion, the nitrogen gas is vented from the inside space of the steam drum leaving the steam drum vent open until 50 psi drum pressure is reached.

Figure 7-1 PERMISSIBLE RATE OF SATURATION TEMPERATURE CHANGE

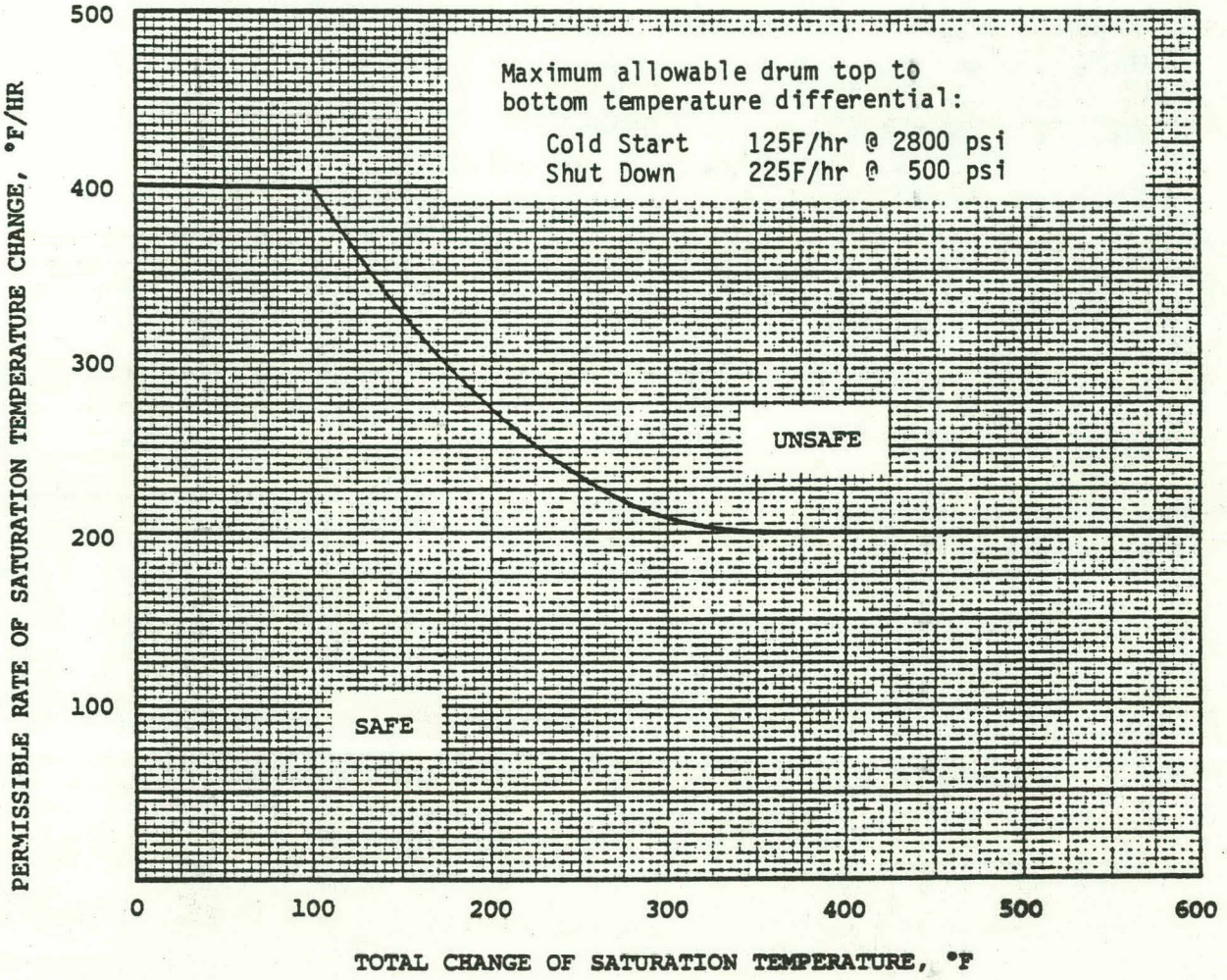

Figure 7.2 illustrates the conventional arrangement of the thermocouples required to maintain the top-to-bottom drum temperature differential and the permissible rate of saturated temperature change during both the start-up and shutdown periods.

Figure 7-2 ARRANGEMENT OF PERMANENT THERMOCOUPLES ON STEAM DRUM

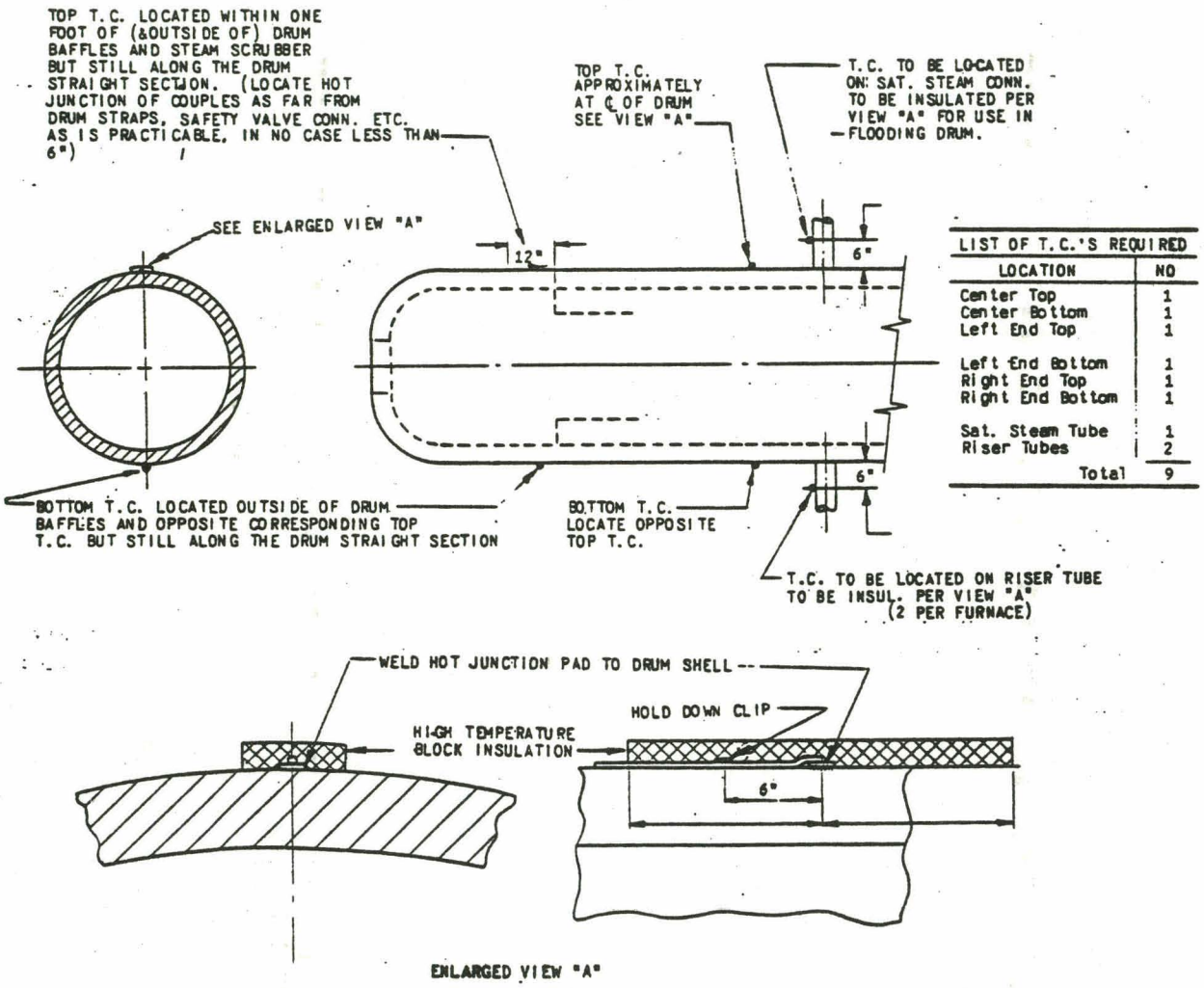

LIST OF T.C.'S REQUIRED	
LOCATION	NO
Center Top	1
Center Bottom	1
Left End Top	1
Left End Bottom	1
Right End Top	1
Right End Bottom	1
Sat. Steam Tube	1
Riser Tubes	2
Total	9

7.4.1.2. Prevention of Explosion in the Boiler

Minor furnace explosions can occur and are noticed as minor excursions in the furnace pressure or draft. Major explosions, on the other hand, are a hazard to both the operating personnel and the equipment involved. Basically, an explosion is the rapid ignition of an

accumulated combustible mixture within a confined space. Even though the furnace is the most likely place for an explosion to occur, explosions can occur in the boiler passes, flues and ducts, air heaters, windboxes, fans, hoppers, combustors, and fuel preparation equipment.

Three conditions must be met before an explosion can occur:

A. The accumulation of unburned fuel in the form of gas or dust or in any form that is easily vaporized with heat.

B. The mixing of this fuel with the proper amount of air or oxygen.

C. The application of sufficient heat, which is normally by a spark or open flame, to raise the temperature of a portion of this mixture to the ignition temperature.

These conditions can exist after one of the following occurs:

A. Ignition is lost during a momentary interruption in fuel or air flow.

B. Ignition is not obtained when fuel is first admitted to the combustor.

C. Combustion is not completed.

D. Failure to purge completely the furnace and all gas passes before attempting to restart the combustor.

Since the explosions occur most likely during start-ups and load changes, it is recommended that the continuous purge method be used for both prefiring and post-firing purges.

During the boiler purge, a minimum of 25% of full load volumetric air which is supplied by the combustor air fan is passed from the MHD

combustor into the furnace, superheaters, economizer and the electrostatic precipitator. The damper of the induced draft fan is adjusted to maintain proper flow for at least five air changes of the entire boiler volume before the combustion is restarted.

7.4.1.3. Gas Temperature Controls

During the pressure raising period, little or no steam flow will pass through the superheater and ITAH because the capacity of the superheater drains and vents are not adequate to ensure steam flow through all superheater tubes. An extremely high firing rate would be required to produce enough steam to ensure flow through all superheater tubes and still raise boiler pressure. On the non-drainable secondary superheater, there will be no steam flow through a tube partially filled with water. For these reasons, the gas temperature entering the superheater section, during pressure raising, must be maintained below 1000F.

Portable thermocouple probes or thermal probes or diagnostic instruments should be used to measure the gas temperature entering the superheater throughout the pressure raising period. The gas temperature entering the superheater should be limited to 950F to 1000F for superheaters with chromium-alloy tubes. The firing rate must be regulated to keep these temperature limits. The use of high excess air through the secondary combustor's air ports reduces gas temperatures.

Thermocouples installed on the outlet legs of non-drainable superheater tubes, where they pass into the unheated vestibule to the headers, will read saturation temperatures until the tubes are clear of

condensate. These thermocouples will show a marked increase in temperatures on the order of 75F above saturation temperatures when that tube is boiled clear. Increases of 20F to 30F are not indications of a cleared tube. These thermocouples should be watched closely during the initial start-up for prompt signs of any unusual conditions such as plugged tubes or misplaced diaphragms.

On the secondary superheater, the tubes will boil clear faster if the gas temperature entering the superheater is maintained as high as possible without exceeding the 1000F temperature limit.

The portable thermocouple probes should be removed as soon as firing is increased when limits are satisfied.

Procedures for protection of the ITAH during start-up are the same as for the high pressure superheater.

7.4.1.4. Economizer

Feedwater is normally not added to the boiler during the pressure raising period. Accumulations of steam, therefore, are possible in the economizer during the pressure raising period. The circulating line is used on the economizer to avoid water hammer, conserve boiler water, and to promote a prompt, positive response in drum water level when feedwater addition is required during the pressure raising period.

The bottom circulating line connecting the lower economizer header to the outlet of the circulation pumps allows water from the boiler to replace water evaporated in the economizer and thus keeps the economizer filled. This protects the economizer from temperature shock when feedwater is required and avoids the delay required to fill the economizer.

7.4.1.5. Tubular Air Heater

In a conventional boiler plant, satisfactory operation of the tubular air heater depends a great deal on maintaining the temperature of the tubes, particularly at the cold air inlet end, above a safe minimum so as to avoid corrosion.

The sulfur content in the coal is a reasonable guide for establishing minimum safe tube metal temperatures above which extensive corrosion is unlikely. The curve appearing in Figure 7.3 is typical of a coal fired boiler and should be used in conjunction with the thermocouples installed on the cold end tubes to maintain safe tube temperatures. The curve only serves as a guide to prevent excessive corrosion, but other factors such as cleanliness of the gas passes, moisture in the flue gas, and type and duration of loads must be taken into consideration as well. Future inspections for signs of corrosion should be made to confirm that established tube metal temperatures are satisfactory. The effects of injecting potassium carbonate into the system should be to lessen potential corrosion. However, the air heater tubes should still be monitored.

When starting up the HRSR System, the tubular air heater is first open for purging of the boiler setting (see Section 7.4.1.2. for Prevention of Boiler Explosion) then closed until testing when the system is up and in steady operation. To place the tubular air heater in line for testing, the test air fan and electrical heater should be in operation. As the air side temperature is maintained in the range of 125F, the tubular air heater is placed into operation by opening gas side inlet and outlet dampers.

Figure 7-3 Low Temperature Corrosion Limits

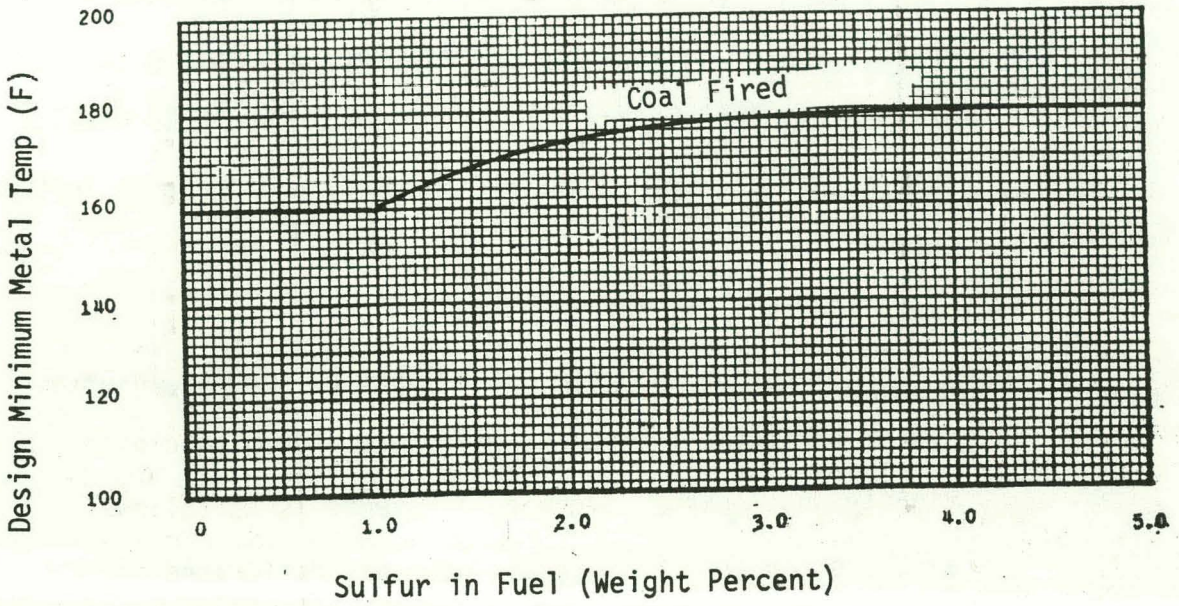

7.4.2. Regenerative Air Heater

During the start-up period of the HRSR boiler, the regenerative air heater remains closed except for the initial opening of the gas side dampers for purging of the boiler setting to prevent explosion. When the system is up and in steady operation, the regenerative air heater is placed in line for testing by the controlling of the gas pass and air pass dampers to alternate the gas flow and the air flow through the heater. There are no limits on the rates permissible to heat the regenerative air heater.

7.4.3. Electrostatic Precipitator

A. Start-Up

1. Check all maintenance access doors.

   The bolted plate type doors installed on the high voltage bus system between the transformers and roof girders are not key interlocked. A visual check should be made to insure that all such doors are in place and properly bolted down.

2. Close and lock all access doors.

   Following the sequence established by the Key Interlock System Arrangement Drawing, all doors should be closed tightly and locked. Sequence of events is as follows:

   a) Close and lock all access doors not designated as "gounding doors".

   b) With keys released from these doors, the designated grounding doors can now be closed and locked.

3. Remove all safety grounding devices.

   If the precipitator has been open for inspection or maintenance, grounding cables will have been installed on all electrical bus sections. Once all personnel are out of the precipitator and after all other access doors are closed, these grounding cables are to be removed and stored in the designated location. Using the insulated pole, remove the clamp from the high voltage system. Then remove the welding connector end from the receptacle mounted on the casing. Close and lock doors.

4. Return T-R grounding switches to "on" position.

   With interlock keys obtained by locking the designated grounding doors, turn the T-R set internal grounding switches to their normal position.

5. Prepare to energize T-R controls.

   As the final step in returning the key interlock system to its normal operation position, interlock keys from the grounding switches are to be inserted in the individual T-R control panels.

6. Energize insulator heating and hopper heating systems at least eight (8) hours before starting precipitator.

   These systems are intended to maintain all external electrical insulators and the lower hopper surfaces above dewpoint temperature. To obtain the benefit of this heating on start-up, early energization of these systems is recommended.

7. Energize all rapping systems prior to initial boiler firing.

   Even if the precipitator T-R sets are not immediately energized upon initial firing of the boiler, it is recommended that all rapping systems be in operation whenever gas is flowing through the precipitator.

8. Start ash removal system.

9. Energize T-R sets and place in automatic operating mode once coal firing has begun.

   To prevent sparking anywhere within the precipitator

system during purging operations when explosive mixtures may be present, the T-R sets should not be energized until after the boiler master fuel trip has been reset.

Also, to minimize fouling the precipitator internals during low gas temperature operation with straight oil firing or combined oil and coal firing, it is preferred to delay energizing the T-R sets until the boiler is operated on coal only.

B. Shutdown

1. Transformer-Rectifiers

On a complete shutdown of the precipitator along with the rest of the HRSR boiler, transformer-rectifiers should be de-energized when combustor firing is stopped. All T-R sets will trip when the Master Boiler Fuel Trip is tripped. If an automatic trip function is not incorporated into the system, or if the precipitator or certain sections are to be shutdown without shutting down the boiler, each T-R control panel may be shutdown with the local "off" pushbutton.

2. Seal Air Fans

The seal air fan should be kept in service whenever the boiler fans are in operation. Shutdown seal air fan after fans have been secured.

3. Rapping Systems

It is recommended that all rappers be kept in service

throughout the boiler cooling operations or a minimum of eight hours after de-energizing the transformer-rectifiers.

4. Ash Removal System

   Keep the ash removal system in service while rappers are in operation. Hoppers should be completely emptied before securing this system.

5. Heating Systems

   The hopper heating and insulator heating systems should be kept in service until all boiler fans, rapping systems, and ash removal systems are secured. For short outages when access into the precipitator is not required, these heating systems could be left in operation throughout the shutdown period.

6. Interlock System

   If inspections or other work are to be performed inside the precipitator, the T-R control panel circuit breakers are turned off and T-R set internal grounding switches turned to the grounded position. Following the established key interlock sequence, unlock all designated grounding doors, attach grounding cables and then open other access doors as necessary.

   CAUTION: FOLLOW THE PRECAUTIONS LISTED IN SECTION 7.2, PERSONNEL SAFETY, BEFORE ENTERING THE PRECIPITATOR FOR INSPECTION OR SERVICING.

C. Partial Shutdown

1. Bus Section or Field Shutdown

An individual bus section or field of the three field precipitator can be deactivated while other fields continue to operate. Deactivating a bus section or field may be necessary whenever a malfunction occurs in a local area and the entire precipitator cannot be shutdown for service.

Such a partial shutdown can be accomplished by de-energizing the particular T-R set and controls. After grounding the internal grounding switch on the transformer-rectifier, service work can be performed on the T-R controls and the low voltage wiring up to the transformer-rectifier. The key interlock system is arranged such that no access to any internal parts of the precipitator is possible under partial shutdown conditions.

If a bus section or field is de-energized to perform service or maintenance on a transformer-rectifier, special precautions should be observed as described under Section 7.2., Personnel Safety.

When deactivating either a bus section or field, it is suggested that all auxiliary systems such as rappers and heaters be kept in continuous operation.

7.5. Normal HRSR System Operation

During normal operation, a minimum amount of maintenance is required. However, certain items must be checked constantly to insure proper operating conditions. They are listed in the following:

A. Controls will maintain the unit, following the heat output of the combustor. Operator must be aware of the normal tolerances for flows, temperatures, and pressures, and take corrective action for deviations. Particular attention should be paid to superheater and intermediate temperature air heater tube temperature limits.

B. Sootblower sequence should be adjusted to actual operating requirements.

C. Boiler water should be sampled regularly and blowdown and/or chemical addition made to correct deviations.

D. Steam drum water level should be constantly monitored. Feedwater is added to the steam drum to maintain a safe, normal water level.

E. Tour the unit regularly to ensure all auxiliary equipment is operating properly. Check for evidence of tube leaks or other malfunctions.

7.6. Maintenance

The proper operation of the HRSR system includes routine maintenance and inspection during operation as well as outages. Operating conditions are monitored for variations from normal design level so

that preventive measures can be taken to alleviate the problem before equipment breaks down.

The objective of this section is to address the maintenance areas which are generally practiced in the utility industry and related to the HRSR boiler. The maintenance of auxiliary equipment such as the boiler feed pumps, recirculation pump, air cooled condenser fan, electrical air preheaters, clinker-grinders and secondary air fans are to be supplied by vendors after those items have been purchased and are not included in this section.

7.6.1. In-Service Maintenance

In-service maintenance includes continuous monitoring of indicators and recorders, and inspecting equipment for its proper function. This section emphasizes the safe operation of the HRSR boiler and protection of the pressure parts from excessive thermal stress, or overheating, which could result in shutdown.

The prevention of boiler explosions and leakage of toxic gas deserves high priority. Both are dangerous to the operating personnel and equipment.

A boiler explosion may occur from the ignition of a combustible mixture in a confined space such as the diffuser, furnace, the superheaters, air heaters, or the electrostatic precipitator. A combustible mixture can accumulate as a result of incomplete combustion during start-ups, load changes, or loss of ignition due to interruptions of fuel and air supply. As this happens, the stack gas monitors usually

indicate a drop in flue gas temperature and high contents of CO and O_2. IT IS RECOMMENDED THAT THE COMBUSTOR BE EQUIPPED WITH FLAME DETECTORS. In cases where accumulation of combustible mixture exists, the fuel and oxygen supplies should be shut-off immediately. The boiler is then purged with air from the combustor through the electrostatic precipitator. (Refer to Section 7.4.1.2. for procedures to purge the boiler.) The operator should pay special precaution to the equipment operating under positive pressure. There is a potential of gas leakage from connections of the combustor outlet and the furnace inlet. The gas is dangerous to the operating personnel due to its CO content and high temperature. It is recommended that no personnel be allowed in the vicinity areas of the combustor, the diffuser simulator and the furnace while the system is in start-up operational modes.

During operation, the safety valves are inspected frequently. If one of the safety valves is found leaking, it should not be gaged or by-passed. The boiler should be shut down for valve repair. In order to maintain proper water level in the steam drum, the gage glass should be kept clean and its water level active at all times. The steam pressure gages are also frequently checked for correct calibration. The connecting piping of both the pressure gage and level gage are periodically blown down to clear of any accumulation of solid.

A continuous drop in both steam drum water level and water chemicals indicates leakage. Operating at high pressure, the jets of leaking water or steam can easily erode the adjacent tube bank and further aggravate the problem. The boiler should be removed from service by

tripping the combustor fuel and purging the boiler. The secondary superheater outlet valve and the economizer inlet valve should be closed. The steam valves, SV-1, SV-3 and SV-6, should also be closed. (Refer to Figure 3-15 in Section 3.2. for valve locations.) This procedure will minimize the boiler pressure decay and its corresponding reduction in water temperature. The boiler and its steam drum are also protected from excessive thermal shock by the returning feedwater. It is recommended that every effort be made to determine the location and cause of leakage and make correction before operation is resumed.

Tube deposits can reduce heat transfer and promote corrosion of tube metal. Thus the sootblowers must be properly maintained and must be operable. The supply pressure and the blowing pressure must be constantly checked to insure adequate cleaning and to protect the tube lance from overheating. Supply pressure should be continuously monitored when blowing soot to insure that steam supply is adequate. Actual blowing pressure at the sootblower should be periodically checked. Blowing pressure can be manually adjusted with an element in the sootblower head at a constant supply pressure.

Chordal thermocouples installed in the furnace walls will measure the extent of internal deposits. The internal deposit can be alleviated by improved chemical treatment. (Refer to Section 7.6.3.2. for volatile chemical treatment with supplemental phosphate.) However, if the thermocouples indicate that the tube metal temperature has risen beyond the design limit, the boiler should be shut down for deposit removal. During outage, chemical cleaning processes can be applied as required.

The tubular air heater in the HRSR boiler is similar to typical utility boiler application. With flue gas flowing inside the tube, the operation of the tubular air heater calls for close attention to the internal wall deposits. Spent seed may condense out of the flue gas as it is cooled down. Fly ash and seed accumulation may build up on the gas side of the air heater to the extent that increased sootblowing may be required. Evidence for increased cleaning will be indicated by a higher flue gas exit temperature or an increase in gas side draft loss.

The regenerative air heater is equipped with two retractable sootblowers to remove surface deposits. During operation, the need for sootblowing is determined by observing the pressure drop across the air heater. Comparison of air heater pressure drop before and after blowing will show the effectiveness of cleaning the surface. In cases where deposits cannot be removed, the following method is available to improve the effectiveness. The heating surface temperature is increased by letting the gas flow through the air heater longer, but the air flow shorter. Then, the sootblowers are operated again. This temperature increase will help to dry the sticky deposits and help break the bond between the surface and deposit.

The electrostatic precipitator, like any other equipment, requires periodic inspection and maintenance to keep it in good operating condition. The in-service inspection and maintenance include the following:

A. Daily

1. Record readings at all instruments on T-R control panels. Extremely low voltage readings combined with high current

readings or extremely high voltage readings in conjunction with low current readings indicate abnormal operation.

2. Check operation of all rapper systems by listening for hammer operation while rapper drive is energized. This is the only check that will verify that shear pins and other drive components are operable.
3. Check for proper sequencing and timing of the ash removal system. Check for proper operation of ash fluidizers and hopper vibrators. Hopper vibrators should be operated only when ash is being removed from the hopper served by that vibrator.
4. Check that seal air vent connections to the discharge rapper system ceramic coupling housings and high voltage bus ducts are clear. Vent connections to the roof girders are normally located under the checkered plate roof and not accessible for checking during operation.

B. Weekly

1. Check lubricant levels in all rapper drives, damper drives and other lubricated rotating equipment.
2. Check collector plate rapper system timers for proper setting and operation.
3. Check oil level and temperature on all transformer-rectifiers. Temperature will vary with operating conditions and ambient temperatures above the 95C alarm point indicate improper cooling or an internal fault.

C. Periodic Maintenance

1. Change oil level in rapper system drive units at intervals recommended by the manufacturer.
2. Change oil levels in other rotating lubricated equipment as recommended by the manufacturer.
3. Obtain transformer fluid samples as recommended by the manufacturer.

7.6.2. Outage Maintenance

Outages are scheduled as required by the HRSR Test Plan and the operating conditions of the HRSR boiler. During outages, the boiler and its equipment are inspected for cleanliness of the external and internal surfaces. Equipment cleaning and washing can be carried out if it is required. In this section, the areas of outage maintenance include (a) the boiler and its pressure parts, (b) the tubular air heater, (c) the regenerative air heater, and (d) the electrostatic precipitator.

7.6.2.1. Boiler and Its Pressure Parts

During the outages, the inspection of drum internal consists of checking all baffles, water marks and possible drum cracks. Markings in the top of the drum, above normal water level, left by water solids are indications of baffle leaks. The normal water level is usually indicated by a well defined line between the steam and water space left after the drum is drained. A poorly defined or extremely uneven water line is a

sign of possible baffle leaks, improperly installed feedwater pipe, or improperly installed cyclones. Pitting of drum walls usually results from oxygen corrosion. Drum cracks can be due to excessive thermal stresses from improper heating and cooling during start-ups and shut-downs. However, drum cracking is a rare occurrence and it is important to differentiate between the actual and apparent cracking. Most apparent crack marks result from slag inclusions, pitting or tool marks. Ultrasonic or magnaflux testing can be conducted to determine the extent of the marks or cracks. All abnormal drum conditions should be thoroughly investigated and repaired before operation is resumed.

The refractory of the furnace should be examined for signs of erosion by gas impingement, crack marks, or patch of bare tube area as a result of shedding the refractory. The tube metal under the crack area and the exposed tube wall and studs should be inspected for signs of overheating and corrosion before efforts to repair the refractory proceed.

Superheater enclosure walls are also inspected for signs of overheating which can cause tube swelling, blistering or warping. If overheating of tubes occurred during operation, it is necessary to measure the degree of tube wall thinning and swelling by ultrasonic testing, and proper tube repair should be carried out before operation can be resumed.

Superheater tubes are inspected during outages for external corro-

sion and erosion. If metal loss is suspected, the tube outside diameter should be measured to determine the extent of metal loss. If metal loss is severe, the cause of trouble should be determined and corrected prior to returning to service.

An internal inspection of the primary superheater is also made for deposits caused by carry-over. The internal deposits may increase steam pressure drop in the tube banks and cause tube overheating. Sample tube sections in the high heat flux zones are removed for inspection if internal deposits are suspected. The cause should be determined and corrected before returning the unit to service.

The inspection also includes superheater supports. They should hold the superheater tubes in alignment as intended and also permit expansion of the tube element without excessive strain on the tube supports.

A check of all sootblowers and areas cleaned by these sootblowers should be included in the regular outage inspection. Tubes in the sootblower zones should be inspected closely for any signs of metal loss due to fly ash erosion, steam cutting, rubbing of sootblowers, or corrosion. Metal loss can occur from the direct impingement of high pressure steam on the tubes. Corrective measures include reducing the blowing pressure or providing adequate draining of condensate from the sootblower supply lines.

Excessive deposits of dust, ash and seed material on the heat transfer surface and ash hoppers should be removed during outages. These deposits can sinter during operation into hard lumps and provide anchors for

additional accumulation. In the convection tube banks, this accumulation can channel gas flow path and increase gas velocity crossing the tube. The consequences are rapid erosion of the surrounding tube metal. These accumulations also promote corrosion. During outages, these deposits should be removed by washing and flushing with warm alkaline solution.

During start-up, the tube metal temperature of the economizer can fall below the acid dewpoint of the flue gas and corrosion can occur. As a precaution against tube failure, the economizer is frequently inspected for signs of metal loss. Proper steps such as improved soot-blowing cycles, and maintaining of higher cold end temperature, are available to counter the problem. Expansion joints are also likely spots for corrosion and should be inspected frequently.

7.6.2.2. Tubular Air Heater

During outages, the tubular air heater is checked for leakage and plugged tubes. Sample tube sections may be removed for analyses of gas side corrosion. Outage maintenance consists of washing the air heater with a warm alkaline solution if required.

With the unit out of the service, a check can be made on the possible presence, or location, of leaks by placing a small amount of pressure on the air side and making a visual check or feel of tube ends on the gas side. Be careful that the air pressure in this test should be within the design pressure of the air heater and duct work.

For avoidance of plugging and possible corrosion of the tubes,

positive cleaning of the gas passes is necessary during the regular outages of the unit. Since the ash and seed deposits on tubes are to a degree soluble in warm water, warm alkaline water is considered the most effective method of deposits removal.

Prior to commencing the washing cycle, it is important to insure that all tubes are open to enable the wash water to flow through all the tubes simultaneously. Washing is accomplished with a warm alkaline solution with a pH in the range of 10.5 to 11.0. The source of the solution may be the feedwater system which can be piped to the sootblowers.

It is recommended that the volume of water be 10 gpm for washing each pass of the air heater. The time required will vary depending on the solubility and thickness of the deposits. However, experience has shown that five hours of soaking has been effective.

After visual inspection indicates that flow passage exists in all tubes, the washing cycle may begin. The upper tube sheet is flooded and a water level above the tube sheet is maintained. This will ensure that flow is introduced to all tubes at the same time and assist in flushing the loose deposits away. The washing cycle is continued until the tubes are cleaned.

7.6.2.3. Regenerative Air Heater

Previous sections have discussed various factors of heating surface deposits. As these depend on the combination of fuel and seed, flue gas moisture content, cold end temperature and load conditions, the scheduled outages provide opportunity to collect samples of deposits, and inspect

for corrosion in order to establish a cold end temperature limit and sootblowing cycles. If sootblowing and cycling cold end temperature fail to remove deposits during operations, water washings of the air heater can also be performed during outages.

Several basic items should be kept in mind when washing the air heater.

A. Before washing, always make sure that the drain valves are open on the air and gas side for removal of wash water.

B. Fresh water should be used at a temperature of roughly 140F to 160F. In many cases washing is improved by maintaining a slight alkalinity in the wash water.

C. Water washing soaks and softens the ash deposits on the heating surface and, therefore, requires some time. It is essential that a complete job be done in removing the deposits before placing the air heater back in service. Some types of ash deposits when soaked and not removed from the surface will later set up like cement and become nearly impossible to remove.

7.6.2.4. Electrostatic Precipitator

Before entering a precipitator during outage, it is important to make certain the equipment has been properly secured and tagged out. All bus sections must be grounded (Reference to Section 8.2. for safety precautions).

Even though the extent of inspection and maintenance work to be performed during unit outages will be dictated by operating problems

reported during the preceding running period as well as the length of the outage, the following are considered minimum requirements. For details on some of the listed inspection and maintenance procedures, refer to Pre-Operation Check Out of the electrostatic precipitator.

A. Internal Electrical Clearances.

Confirm that internal electrical clearances are being maintained above the minimum values shown on applicable drawings. Readings recorded during the initial check-out can be used as reference.

B. Discharge Frames

Inspect frames for broken or loose wires. Broken wires may be cut out removing only the failed section. Cut as close to the pipes as possible to minimize the length of loose ends.

Loose wires may be kinked slightly to re-establish tightness. Do not overtighten as this may slacken adjacent wires.

Check discharge frame anvils for proper position.

C. Collecting System.

Check condition of rapper bars and anvils.

D. Rapping Systems.

1. Check all internal parts for proper positioning with respect to anvils.
2. Check condition of universal joints located on each side of all rotating ceramic couplings in the discharge rapping systems.
3. Inspect and clean rotating ceramic couplings as described

under "Insulator Cleaning."

4. On a yearly basis, or until a wear pattern has been established, completely disassemble at least one hammer assembly and a shaft bushing/bearing assembly in both the discharge rapper system and collector rapper system. These inspections should be made on components in the first precipitator field since all rappers in this field operate continuously and are exposed to the most severe ash conditions.

   Wear measurements obtained can be used to predict when the hammer bushings, main shaft bearing bushings and pillow blocks may require complete replacement. Suggested criteria for replacement is as follows:

   a) Discharge Hammers

      Remaining wall thickness of inner bushing or outer bushing 1/32 in.

   b) Collector Hammers

      Remaining wall thickness of inner bushing 1/8" or outer bushing 1/16 in.

   c) Shaft Bushings and Pillow Blocks

      Combined total wear of bushing and pillow block of 3/8" radially. In the event that pillow blocks wear faster than the shaft bearing bushings, it may be desirable to shift the lower and upper pillow block halves and obtain additional wear from the set in this manner.

      NOTE: To maintain shaft alignment within limits, it is

necessary to replace wear parts uniformly along the entire length of any given rapper shaft. After any parts replacement, overall shaft alignment should be reset to within 1/16 in. in all directions.

5. After performing the above inspections or at the completion of maintenance work, all hammers should be returned to their normal position. Out of position hammers, i.e. hammers that have been dropped over manually, may jam the system once it is returned to service. To insure that the system is operable, it is suggested that the system be operated for several revolutions before closing up the unit.

6. Inspect and clean the non-metallic internal wall seals at the discharge system rapper shaft penetrations.

   If replacement is necessary, disconnect the rotating ceramic coupling at the outboard universal joint and slide the inboard universal joint out of the the shaft coupling. Remove collar from shaft coupling. Wall seal can now be removed and replacement seal slipped into position. Reassemble all components.

E. Insulator Cleaning

Clean all support insulators and the hanger shroud insulators located in the roof girders. The inside surfaces as well as the outside surfaces of the shroud should be cleaned. Clean all rotating insulators used in the discharge rapping systems.

Insulators may be cleaned with ZEP 300 Safety Solvent or a vinegar solution. Do not use petroleum based solvents.

F. Insulator Replacement

Inspect all insulators for cracks or other damage. In the event either a support or shroud insulator requires replacement, the affected bus section will have to be temporarily supported as recommended on the drawing entitled "Arrangement Temporary Support for Insulator Replacement." With replacement insulators in place, take a series of measurements to confirm that the entire bus section is properly positioned.

Rotating ceramic couplings can be readily replaced by unbolting and installing a new coupling assembly.

G. Ash Hoppers

Check hoppers for complete removal of ash.

H. Gas Distribution System

Inspect turning vanes and performated plate curtains for dust buildup or pluggage.

I. Access Doors

Inspect all door gaskets for proper sealing. Replace as necessary.

J. Heating Systems

To check the integrity of both the hopper heating and insulator heating systems, it is suggested that a current reading be obtained and compared with data obtained during initial operation. Such a check, if made at the start of

an outage, will dictate the need for additional checks or maintenance.

K. Seal Air System

General cleanliness conditions inside the roof girders and ceramic coupling housings will give an indication of the effectiveness of the purge air/sealing air system.

On negative pressure installations, some adjustment to air quantity may be possible by varying the air inlet connection. On positive pressure installations, some adjustment to fan damper position may be required.

L. Dampers

Dampers should be checked for proper operation and tight closure.

7.6.3. Boiler Water Treatment

Proper boiler water and feedwater treatment programs are very important to prevent deposits from forming on the inside surfaces of the boiler tubes. These deposits can cause an appreciable increase in tube metal temperature, which can lead to overheat failures, or to under-deposit concentration of boiler water impurities that may accellerate tube corrosion.

At a drum pressure of 2800 psig, the water quality limits indicated in Table 1 below should be adhered to:

Table 7-1 Recommended Water Limits

Item	Feedwater*	Item	Boiler Water
Oxygen	.007 ppm max.	Total Solids	15 ppm max.
Iron	.010 ppm max.	NA_3PO_4	3-10 ppm
Copper	.005 ppm max.	OH	1.0 ppm max.
Hardness	0 ppm	pH @ 77F	9.0 - 10.0
CO_2	0 ppm	Silica	0.13
Organic	0 ppm		
ph @ 77F	8.8 - 9.2		

*Measurement made at economizer inlet.

7.6.3.1. Prevention of Internal Corrosion

Carbon steel is protected by a fundamental iron - water chemical reaction that forms a protective film of magnetic iron oxide on the internal metal surfaces. A small amount of iron reacts with water until the protective oxide film is formed. Once the film is established, the reaction virtually stops and does not resume until the film is disturbed or removed.

If the film is removed chemically or mechanically, the iron - water reaction starts again to build up the protective oxide. This, in turn, removes more iron from the surface of boiler parts, and, if allowed to continue, will definitely thin the metal parts. It is, therefore, very important to maintain boiler water chemistry within close limits to prevent the chemical removal of the initial protective magnetic iron

oxide film on the internal metal surfaces.

The most common form of corrosion is that caused by the presence of oxygen in the water and steam cycle. The most logical approach to the prevention of corrosion due to dissolved oxygen is to minimize the entrance of oxygen to the cycle and to remove that already present. As a further assurance against the destructive effect of dissolved oxygen, sufficient quantities of a chemical oxygen scavenging compound (hydrazine) are added to the feedwater to maintain a residual of chemicals in the boiler water. The residual is an indication that all oxygen has been removed; it is also available for upset conditions.

A. Chemical Scavenging of Oxygen by Hydrazine.

The overall reaction between hydrazine and oxygen is expressed as follows:

$$\text{Hydrazine} + \text{Oxygen} \longrightarrow \text{Nitrogen} + \text{Water}$$

$$N_2H_4 + O_2 \longrightarrow N_2 + 2\,H_2O$$

It can be seen from the above reaction that one part of N_2H_4 will react with one part of oxygen; however, it should be understood that this reaction is a function of time, temperature, and concentration. Figure 7-4 can be used as a guide in estimating hydrazine requirements.

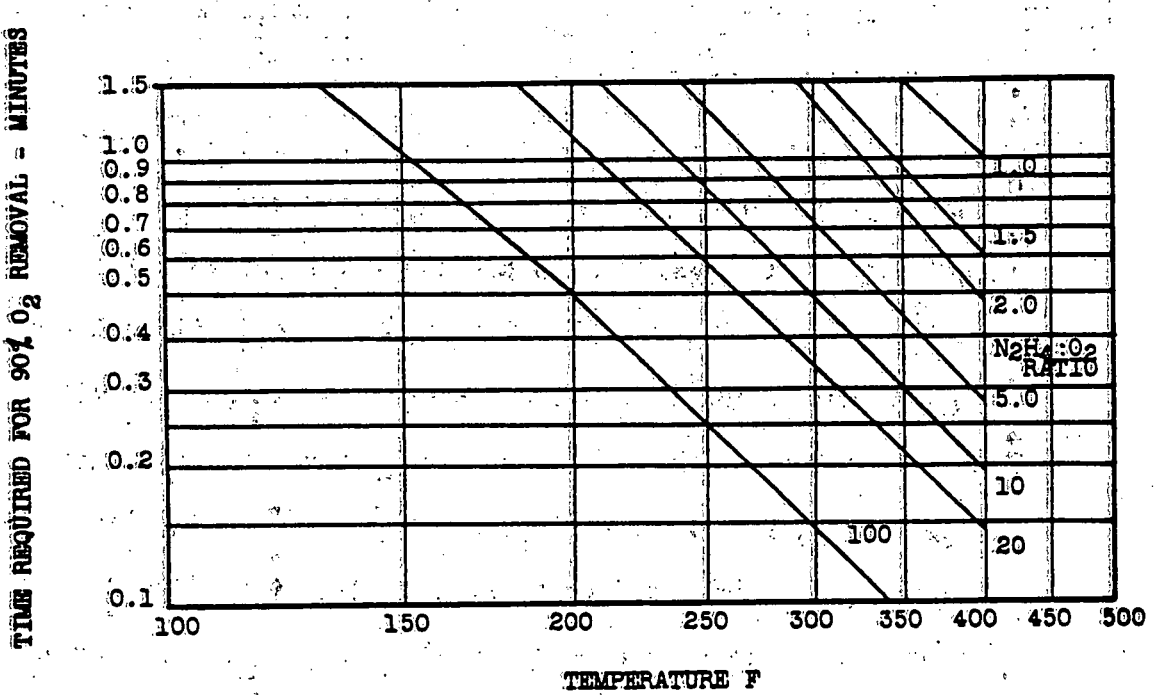

Hydrazine-Time-Temperature Relationships for 90 Percent Oxygen Removal at pH = 9.5.

FIG. 7-4 BOILER WATER LIMITS

A. Hydrazine is a volatile material that does not contribute to the dissolved solids content of the feedwater. Hydrazine starts to decompose at the temperature of 400F yielding ammonia to the system. Due to its volatility, the hydrazine is added in sufficient amounts to maintain a residual of 20-30 ppb at the economizer inlet. As a result of this small quantity of hydrazine, only minute amounts of oxygen can be allowed to enter the boiler water system.

B. pH Control of Condensate - Feedwater

Feedwater pH level is controlled to reduce iron and copper pick-up in the condensate-feedwater system. The most common neutralizing chemicals used for controlling the pH of the condensate-feedwater system are ammonia, morpholine, cyclohexylamine, and hydrazine. These chemicals are volatile alkalizers which distill with the steam and neutralize trace acids formed in the condensate. Hydrazine is included with the volatile alkalizers; besides being an oxygen scavenger, it decomposes at the operating temperature of the boiler (beginning at 400F) into ammonia, hydrogen, and nitrogen. The decomposed gases are periodically vented from the surge tank to prevent buildup in the system.

Experience has shown that the condensate pH, when using hydrazine, will stabilize in the range of 8.8 - 9.5 (due to the ammonia formation) depending upon the residual of hydrazine maintained at the economizer inlet.

Proper pH control and selection of a neutralizing chemical can be determined only by a critical study of the materials making up the condensate-feedwater system and on the basis of iron and copper concentrations in the feedwater which would be indicative of the attack on these cycle materials. Limits for iron and copper concentrations in the feedwater are included in the Table 1.

When feedwater and boiler water conditions are changed

suddenly and drastically, temporary upsets may be produced which can be troublesome. Therefore, any changes such as an alteration in the feedwater treating practice, should be made gradually and with close observation. When hydrazine addition is first started, initial dosage should be small and changes in the iron and copper concentration in the feedwater should be carefully monitored. If the iron and copper concentrations in the feedwater and boiler water increase significantly, boiler blowdown should be increased. Since it sometimes requires days or weeks for conditions to stabilize, results must be observed over a significant period before effects can be properly evaluated.

7.6.3.2. Prevention of Internal Deposits

Internal deposits vary in both their physical and chemical character. Though they differ in degree, all are barriers to heat transfer and prevent complete wetting of the tube surfaces with water. The result is always elevated tube temperatures.

At the extreme are the very hard and dense deposits which are impervious to water and are poor heat conductors. When these deposits form in high heat input zones, the results are tube failures from overheating where considerable swelling and thinning of the tube wall has occurred. At the other extreme are the soft and porous deposits which allow boiler water to seep to the tube surface. The result is a concentration of boiler water constituents at the tube surface. If the

constituents are scale forming, more scale will form. If caustic, under deposit corrosion will take place.

The prevention of internal deposits in the HRSR System consists of volatile treatment supplemented by trisodium phosphate (Na_3PO_4). In this treatment, ammonia is added to the system to maintain the water pH in the range of 8.8 - 9.5 and a small residual of phosphate is carried in the system to precipitate any hardness constituents of calcium and magnesium compounds that may enter the system with the make-up water. The additions of the trisodium phosphate in the range of 3 - 10 ppm are recommended for the HRSR boiler to prevent excessive phosphate hideout, which is a phenomenon denoting the temporary disappearance of phosphate in the boiler water upon load increase and its reappearance upon load reduction.

7.6.3.3. Prevention of Carryover

Vaporous carryover is the distillation of contaminants directly from the boiler water to the steam. The vaporous carryover of boiler water contaminants into the steam is a function of the density ratio of steam to water. Of all the impurities common to boiler water, silica and sodium hydroxide most readily carryover in vaporous form. Silica carries over vaporously to a greater extent than other common boiler water constituents, but the vaporous carryover of sodium compounds becomes appreciable at 2200 psig, and at 2800 psig the vaporous carryover of sodium compounds is many times greater than normal levels of mechanical carryover. Experience has shown that the concentration of silica in the steam should be limited to 0.015 ppm to prevent internal

tube deposits in the superheater, the intermediate temperature air heater, the air cooled condenser, and the sub-cooler. The corresponding concentration of silica in the boiler water should be limited to 1.13 gpm in order to prevent excessive silica carryover at the operating pressure of 2800 psig. Fig. 7.5. illustrates the reduction in silica concentration in boiler water that must be accomplished during the

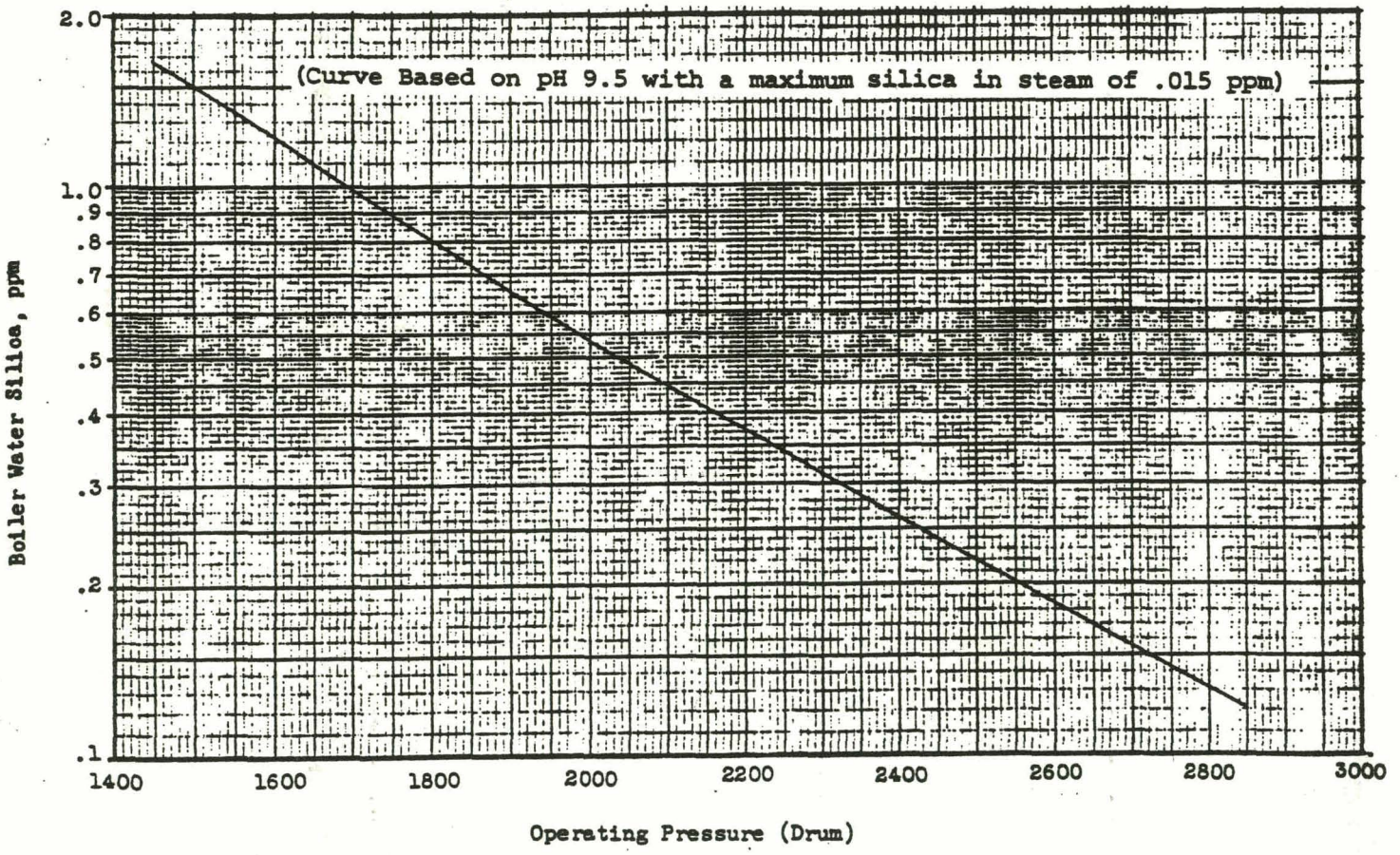

FIG. 7-5 RECOMMENDED MAXIMUM SILICA CONCENTRATION IN BOILER WATER

pressure raising period. In addition to mechanical steam separation in the HRSR steam drum, blowdown is carried out intermittently to control the solid content in the boiler.

Although sodium hydroxide is not added to the high pressure boiler, it can nevertheless exist in the boiler water as a result of the prevention of internal deposits by volatile treatment with supplemental trisodium phosphate. This treatment may increase the carryover very slightly. B&W believes this disadvantage is outweighed by the protection it offers against trace hardness constituents that enter the system periodically.

APPENDIX A

RECOMMENDED ENVIRONMENTAL REQUIREMENTS FOR COMPLIANCE WITH FEDERAL AND STATE OF TENNESSEE REGULATIONS

TABLE OF CONTENTS

		Page
A.1.0	INTRODUCTION	A 4
A.2.0	SUMMARY OF AIR POLLUTION CONTROL REQUIREMENTS	A 5
A.2.1	Air Pollution Control Regulations	A 5
A.2.2	Federal Air Pollution Control Requirements	A 5
A.2.3	State Air Pollution Control Regulations	A 7
A.2.3.1	Particulate Emissions	A 8
A.2.3.2	Sulfur Dioxide Emissions	A 8
A.2.3.3	Visible Emissions	A 9
A.2.3.4	Fugitive Dust	A 9
A.2.4	Construction and Operating Permits	A10
A.2.4.1	Construction Permit	A10
A.2.4.2	Operating Permit	A11
A.2.5	Emergency Episode Requirements	A11
A.3.0	SUMMARY OF WATER POLLUTION CONTROL REQUIREMENTS	A13
A.3.1	NPDES Permit	A13
A.3.2	Water Pollution Control Regulations	A13
A.3.2.1	Federal Effluent Criteria	A13
A.3.2.2	State of Tennessee Effluent Criteria	A20
A.3.3	Construction Approval Permit	A21
A.4.0	SUMMARY OF SOLID WASTE DISPOSAL REQUIREMENTS	A24
A.4.1	RCRA	A24
A.4.1.1	Hazardous Waste	A25
A.4.1.2	Non-hazardous Waste	A28
A.4.2	Regulations Governing Solid Waste Processing And Disposal In Tennessee	A28
A.4.3	Hazardous and Non-hazardous Waste Determination	A28

TABLE OF CONTENTS

(Continued)

		Page
A.4.4.	Hazardous Waste Management	A29
A.4.4.1	Transportation of Hazardous Waste	A35
A.4.5	Non-hazardous Waste Management	A39

ATTACHMENTS

AI	STATE OF TENNESSEE CONSTRUCTION AND OPERATING PERMIT APPLICATION SET	A42
AII	NATIONAL POLLUTANT DISCHARGE ELIMINATION SYSTEM APPLICATION FOR PERMIT TO DISCHARGE WASTEWATER	A52
AIII	RULES GOVERNING HAZARDOUS WASTE MANAGEMENT IN TENNESSEE (PROPOSED December, 1979)	A88

LIST OF EXHIBITS

No.	TITLE	Page
A.1	STATE OF TENNESSEE AIR POLLUTION CONTROL REGULATIONS APPLICABLE TO A 20MWt AIR CONTAMINANT SOURCE	A4
A.2	FEDERAL CHEMICAL EFFLUENT LIMITATION GUIDELINES FOR STEAM ELECTRIC SOURCES TO BE MET BY ALL NEW SOURCES AT THE COMPLETION OF CONSTRUCTION	A15
A.3	PRIORITY POLLUTANTS	A16-A18
A.4	STATE OF TENNESSEE EFFLUENT LIMITATIONS AND STANDARDS FOR INDUSTRIAL WASTEWATER TREATMENT PLANTS	A21
A.5	HAZARDOUS WASTE MANIFEST (EPA)	A26
A.6	HAZARDOUS WASTE GENERATOR REPORT	A27
A.7	GENERATOR NOTIFICATION DOCUMENT	A30-A33
A.8	HAZARDOUS WASTE MANIFEST (TENNESSEE)	A37-A28
A.9	REQUIREMENTS FOR APPROVAL OF A "SPECIAL" SOLID WASTE	A39-A41

A.1.0 INTRODUCTION

The purpose of this appendix is to summarize and evaluate the impact of current federal and state environmental regulations applicable to the design, installation and operation of the 20 MWt Heat Recovery/ Seed Recovery (HRSR) System. The 20 MWt HRSR system will be installed at the Coal Fired Flow Facility (CFFF) located at the University of Tennessee Space Institute (UTSI), Franklin County, Tennessee. The scheduled construction period for the fabrication of the facility is expected to be from late 1980 to early 1982. The test program is scheduled to begin in mid 1982 and to end in late 1983. A combined total of 2000 hours of testing is scheduled to be performed during this period.

A.2.0 SUMMARY OF AIR POLLUTION CONTROL REQUIREMENTS

Based on a review of the 20 MWt HRSR project and applicable State and Federal Air Pollution Regulations, it is determined that the controlling air pollution limitations are the provisions of the State of Tennessee Air Pollution Control Regulations summarized in Exhibit A-1.

A.2.1 Air Pollution Control Regulations

A summary of the requirements of the federal and state air pollution control regulations affecting the design, construction, and operation of the 20 MWt HRSR System are presented in the subsequent paragraphs of this section.

A.2.2 Federal Air Pollution Control Requirements

As the capacity of the 20 MWt HRSR System is well below the 73 MWt (250×10^6 BTU/hr) limitation, the system is not subject to the provisions of the recently promulgated New Source Performance Standards (NSPS) for Electric Utility Steam Generators (Federal Register, Volume 44, No. 113, p. 33579, June 11, 1979). Therefore, the applicable federal air pollution control regulations which will be considered are limited to National Ambient Air Quality Standards (NAAQS) and Prevention of Significant Deterioration (PSD).

Operation of the subject project is not expected to result in violation of NAAQS or an applicable PSD increment. Based on a review of available air quality data for Nashville, Franklin County, and Tullahoma, the intended capacity of the subject system, and the test schedule and anticipated emission rates, compliance by the subject project with NAAQS may be considered assured. In addition, since the facility:

EXHIBIT A-1

STATE OF TENNESSEE AIR POLLUTION CONTROL REGULATIONS

APPLICABLE TO A

20 MWt AIR CONTAMINANT SOURCE

PARAMETER	LIMITATION
Particulate Emission (Ch. 1200-3-6-.02)*	$0.6\ (\frac{10}{Q})^{0.5566}$ lbs particulate/10^6 Btu for Q greater than 1×10^6 Btu/hr, but less than 250×10^6 Btu/hr, where Q=total installation heat input in million Btu per hour
SO_2 Emission (Ch. 1200-03-14-.02)*	5.0 lbs/10^6 Btu for Q less than 250×10^6 Btu in Franklin County
Visible Emissions (Ch. 1200-03-5-.01)*	No. 1 on Ringleman Chart**, or 20% Opacity for 5 min. aggregate in 1 hr. period, or 20 min. in any 24 hr. period.
Fugitive Dust (Ch. 1200-3-8-.01)*	Visible beyond site property line 5 min. per hour or 20 min. per day

* Applicable chapter of the State of Tennessee Air Pollution Control Regulations

** Published and described in the U.S. Bureau of Mine Information Circular 8333.

- will be a temporary source of air emissions, for a period of about two (2) years,
- will not impact a PSD Class I area due to its remoteness to such areas,
- will utilize a modern design electrostatic precipitator for particulate control and seed recovery,
- will operate within the pollutant emission range of 50 tons per year, 1000 lbs per day, or 100 lbs per hour (SO_2 only), and
- will be subject to enforceable conditions which limit the hours of operation,

the 20 MWt HRSR facility, therefore, will not be subject to the Federal PSD regulations.

A.2.3 State Air Pollution Control Regulations

The applicable state air pollution control regulations are set forth in the provisions of the Tennessee Air Pollution Control Regulations as currently amended. These regulations were promulgated in compliance with the requirements of the Tennessee Air Quality Act, as amended, and are currently undergoing revision prior to their submittal as part of the State Implementation Plan (SIP). In general, the revisions are directed towards air contaminant sources whose capacity far exceeds 20 MWt and are, therefore, not expected to impact the subject project. There are no additional local air pollution control regulations applicable to the proposed project.

The 20 MWt HRSR project is not considered to be a major air contaminant source as its capacity does not exceed 250 million Btu/hr (73 MWt) of heat input and as enforceable permit conditions on the type or amount of materials combusted or processed may be used in determining its potential emission rate. The project will be subject only to the provisions of the State of Tennessee Air Pollution Control Regulations listed in Exhibit A-1. These provisions were promulgated in 1979 by the Tennessee Department of Public Health Bureau of Environmental Health Services, Division of Air Pollution Control, and are summarized in Exhibit A-1 and the subsequent subsections.

.3.1 Particulate Emissions (Chapter 1200-3-6-.02)

The applicable state emission standard limits the maximum allowable particulate emissions for a non-process fuel burning installation, commenced on or after April 3, 1972, having a heat input in the range of 1 million to 250 million BTU/hr. The maximum allowable particulate emission, determined in accordance with the expression shown in Exhibit A-1, for the proposed 20 MWt installation, is about 0.2 lbs/10^6 BTU. The facility will employ an electrostatic precipitator with a 99% particulate removal efficiency to be in assured compliance with this limitation.

2.3.2 Sulfur Dioxide Emissions (Chapter 1200-3-14-.02)

The applicable state emission standard limits the maximum allowable sulfur dioxide emission for non-process fuel burning equipment, constructed after April 3, 1972, having a rated capacity of 250 million BTU/hr or less of heat input, as a function of county classification. For the subject project, located in Franklin County, which is designated as a Class IV County, the maximum allowable sulfur dioxide emission is limited to 5.0 lbs/10^6 BTU, as shown in Exhibit A-1. This emission level is expected to be readily achieved by the subject project during operations which utilize western coal or include the addition of seed to eastern coal prior to the combustion process. The SO_2, generated during combustion, reacts with the seed material (potassium compounds), used to improve combustion gas conductivity, resulting in the formation of sulfur compounds, predominately K_2SO_4, which are collected from the flue gas, resulting in decreased SO_2 emissions. Operations with the same eastern coal which do not include seed addition may possibly begin to approach the emission limit and may, therefore, warrant further detailed planning. These conclusions are based on the following fuel data and resultant potential emission calculations.

	No. 6 Illinois Coal (As Fired)	Montana Rosebud Coal (As Fired)
Higher Heating Value, Btu/lb	12283	11560
Sulfur Content, Wt %	4.4	1.05
Potential Emission, lbs $SO_2/10^6$ Btu	7.16	1.82

A. 2.3.3 Visible Emissions (Chapter 1200-3-5-.01)

The applicable state emission standards limiting allowable visible emissions from any air contaminant source are shown in Exhibit A-1. Due allowance may be made for visible emissions in excess of that permitted which are necessary and unavoidable due to routine startup and shutdown conditions. For due allowance to be made, a continuous, current log of such startup and shutdown conditions, showing the time that the conditions began and ended, shall be available to the Technical Secretary of the State Air Pollution Control Board or his representative upon his request.

A. 2.3.4 Fugitive Dust (Chapter 1200-3-8-.01)

The applicable state emission standard, shown in Exhibit A-1, regulating fugitive dust emissions requires that reasonable precautions must be taken to prevent fugitive dust from being emitted in excess of five (5) minutes per hour or 20 minutes per day in such a manner as to produce a visible emission beyond the property line of the site on which the emission originated. Fugitive dust is taken to be any visible emission, other than water droplets, issuing from any source not intended for regular discharge. Reasonable precautions are taken to include, but not be limited to, the use, where possible, of water or

chemicals for control of dust in demolition or construction operations, or the application of asphalt, oil, water, or suitable chemicals on material stock piles, dirt roads, and other surfaces which can create airborne dust. Compliance with fugitive dust control requirement must be achieved at the time operation commences.

A.2.4 Construction and Operating Permits (Chapter 1200-3-9-.01 and .02)

In addition to compliance with the emission regulations discussed in the preceding sub-sections, the 20 MWt HRSR project will require state issued construction and operating permits obtainable from the Technical Secretary.

.2.4.1 Construction Permit

The application set (Forms APC-20, 22, and 24) required for a construction permit is presented in Attachment A1 and is available from the office of the Technical Secretary; for the subject project it should be filed at least 90 days prior to the estimated starting date of construction. In the event that the requirements for a construction permit create an undue hardship on the applicant, the applicant may request of the Technical Secretary a waiver to proceed with the construction prior to the issuance of the permit. The explanation of the circumstances causing the undue hardship would accompany the waiver and permit request. The Technical Secretary may stipulate any conditions he deems necessary for the granting of a waiver. The granting of a waiver does not relieve the applicant of the requirement that the completed installation meet with the Technical Secretary's approval.

As the subject project is not considered a major air contaminant source, it is exempt from the state's Prevention of Significant Air Quality Deterioration provisions, analogous to the federal PSD review, which would otherwise be required prior to the issuance of the construction permit by the state.

A.2.4.2 Operating Permit

The application for an operating permit, which is identical to the construction permit application shown in Attachment A1 should be filed within 30 days after initial startup. This period is extended to not more than 60 days after initial startup, if stack sampling data has been required as a condition on the construction permit (and/or waiver), or the time specified on the construction permit for submittal of stack sampling reports (180-day maximum). Operating permits are issued on evidence satisfactory to the Technical Secretary that the operation of the air contaminant source is in compliance with any standards or rules and regulations promulgated by the Board and that the operation of the air contaminant source will not interfere with the attainment or maintenance of any air quality standard. Such evidence may include such tests as are necessary in the opinion of the Technical Secretary. Standard operating permits are valid for one year or for such time as deemed appropriate by the Technical Secretary.

A.2.5 Emergency Episode Requirements (Chapter 1200-4-15-.01 to .03)

The state of Tennessee Air Pollution Control Regulations include emergency episode requirements designed to prevent undesirable levels of air contaminants during adverse meteorological conditions. The various episode levels are designated in the order of increasing severity, as an air pollution alert, an air pollution warning, or an air pollution emergency. When the Technical Secretary has declared that an emergency episode exists, all operators of air contaminant sources must follow the applicable emergency episode requirements for their industrial category or their air pollution episode emission plan.

For an air contaminant source having the potential for emitting* one hundred tons per year of any combination of particulates, sulfur dioxide, carbon monoxide, nitrogen oxides (expressed as nitrogen dioxide), or nonmethane hydrocarbons, an owner or operator must submit to the Technical Secretary an acceptable air pollution episode emissions reduction plan to be followed during the alert, warning, and emergency levels of an air pollution episode.

Because of the limited capacity and test operation schedule, low anticipated SO_2 and particulate emission rates, and the remote location of the UTSI facility, the subject project is not expected to be affected by these emergency episode provisions of the state regulations. This understanding should be confirmed during the time of construction permit application.

---

* Defined as the capability at maximum capacity to emit a pollutant in the absence of air pollution control equipment, where air pollution control equipment includes control equipment, which is not, aside from air pollution control laws and regulations, vital to production of the normal product of the source or to its normal operation.

A.3.0 SUMMARY OF WATER POLLUTION CONTROL REQUIREMENTS

In accordance with the provisions of the Federal Water Pollution Control Act (FWPCA) Amendments of 1972 and the State of Tennessee Water Quality Control Act of 1977, a National Pollutant Discharge Elimination System (NPDES) permit would be required before any effluent discharge from the 20 MWt HRSR project into or adjacent to any waters of the State of Tennessee would be allowed. The State of Tennessee is among those states which have assumed the authority to issue NPDES permits. The permit allows the discharge of wastewater into State waters in compliance with conditions and effluent criteria stated on the face of the permit.

A.3.1 NPDES Permit

A NPDES application, shown in Attachment AII, for a new point source discharge, such as the subject project, must be completed and submitted no later than 180 days in advance of the date on which the discharge is to commence, unless permission for a later application date has been granted by the Commissioner of the Tennessee Department of Public Health. Each issued permit is valid for a fixed term not to exceed five (5) years.

A.3.2 Water Pollution Control Regulations

In order for the subject project to obtain the necessary NPDES permit, compliance with Federal (Par.A.3.2.1) and State of Tennessee (Par.A.3.2.2) effluent criteria are expected to be required.

A.3.2.1 Federal Effluent Criteria

The federal effluent criteria are contained in the Steam Electric Power Generating Point Source Category Effluent Guidelines and Standards. These criteria, issued by the EPA and published in the Federal Register of October 8, 1974, comprise the following:

- Chemical effluent discharge limitations
- Area run-off discharge limitations
- Thermal effluent guidelines

Chemical Effluent Discharge Limitations

The current federal chemical effluent discharge limitation guidelines are presented in Exhibit A-2. They are expected to be applicable to the subject project and probably represent a minimum control level that would be necessary. Proposed modifications to these guidelines are expected sometime during 1980, and they may include a zero discharge requirement for fly-ash transport water. Effluent limitation guidelines may be included for the 129 so-called "priority pollutants" (See Exhibit A-3). These are the pollutants which were listed in the National Resources Defense Council (NRDC) Consent Decree of June 1976 which resulted from a suit by NRDC et. al. against the EPA in which it was contended that EPA discharge limitation guidelines should be established for additional pollutants. The expected proposed guidelines may require zero discharge of these pollutants or numerical limitations may be applied.

A number of these "priority pollutants" may be present in the effluent discharge of the subject project. These include:

- Cleaning compounds, such as carbon tetrachloride, toluene, benzene
- Asbestos, in cooling tower blowdown, originating from cooling tower fill
- Metal compounds, such as mercury, lead, cadmium, etc.

Exhibit A-2

FEDERAL CHEMICAL EFFLUENT LIMITATION GUIDELINES* FOR STEAM ELECTRIC SOURCES TO BE MET BY ALL NEW SOURCES AT THE COMPLETION OF CONSTRUCTION

Effluent Source[1,4]	pH	TSS (mg/l)		Oil & Grease (mg/l)		Total Copper (mg/l)		Total Iron (mg/l)		Free Available Chlorine[3] (mg/l)		Zinc (mg/l)		Chromium (mg/l)		Phosphorus (mg/l)		Other Corrosion Inhibitting Materials (mg/l)	
		Avg.	Max.	Avg.	Max.	Avg.	Max.	Avg.	Max.	Avg.	Max.	Avg.	Max.	Avg.	Max.	Avg.	Max.	Avg.	Max.
Once-Through Cooling Water	-	-	-	-	-	-	-	-	-	0.2	0.5	-	-	-	-	-	-	-	-
Cooling System Blowdown	6.0-9.0	-	-	-	-	-	-	-	-	0.2	0.5	No Detectable Amount				No Detectable Amount		No Detectable Amount	
Bottom Ash Transport Water	6.0-9.0	30**	100**	15**	20**	-	-	-	-	-	-	-	-	-	-	-	-	-	-
Fly Ash Transport Water	6.0-9.0	30	100	15	20	-	-	-	-	-	-	-	-	-	-	-	-	-	-
Metal Cleaning Wastes[2]	6.0-9.0	30	100	15	20	1.0	1.0	1.0	1.0	-	-	-	-	-	-	-	-	-	-
Boiler Blowdown	6.0-9.0	30	100	15	20	1.0	1.0	1.0	1.0	-	-	-	-	-	-	-	-	-	-
Low Volume Waste Sources:																			
Wet Scrubber Air Pollution Control System	6.0-9.0	30	100	15*	20	-	-	-	-	-	-	-	-	-	-	-	-	-	-
Ion Exchange Water Treatment Systems	6.0-9.0	30	100	15	20	-	-	-	-	-	-	-	-	-	-	-	-	-	-
Water Treatment Evaporator Blowdown	6.0-9.0	30	100	15	20	-	-	-	-	-	-	-	-	-	-	-	-	-	-
Laboratory and Sampling Streams	6.0-9.0	30	100	15	20	-	-	-	-	-	-	-	-	-	-	-	-	-	-
Floor Drainage	6.0-9.0	30	100	15	20	-	-	-	-	-	-	-	-	-	-	-	-	-	-
Cooling Tower Basin Cleaning Wastes	6.0-9.0	30	100	15	20	-	-	-	-	-	-	-	-	-	-	-	-	-	-
Recirc. House Water System Blowdown	6.0-9.0	30	100	15	20	-	-	-	-	-	-	-	-	-	-	-	-	-	-
Other Low Volume Waste Sources	6.0-9.0	30	100	15	20	-	-	-	-	-	-	-	-	-	-	-	-	-	-

* The (daily) quantity of pollutants discharged shall not exceed the quantity determined by multiplying the (daily average) flow times the concentration listed in this table. Where limitations are not specified they are presumed to be unregulated under these standards.

** The (daily) quantity of pollutants discharged in bottom ash transport water shall not exceed the quantity determined by multiplying the (daily average) flow of bottom ash transport water times the concentration listed in the above table and dividing the product by 20.

Notes:

1 - There shall be no discharge of polychlorinated biphenol compounds.

2 - "Metal Cleaning Wastes" shall mean any cleaning compounds, rinse waters, or any other waterborne residues derived from cleaning any metal process equipment including, but not limited to, boiler, tube cleaning, boiler fireside cleaning and air preheater cleaning.

3 - Neither free available chlorine nor total residual chlorine may be discharged from any unit for more than two hours in any one day and not more than one unit in any plant may discharge free available or total residual chlorine at any one time unless the utility can demonstrate to the regional administrator or state, if the state has NPDES permit issuing authority, that the units in a particular location cannot operate at or below this level of chlorination.

4 - In the event that waste streams from various sources are combined for treatment or discharge, the total quantity (mass/time) of each pollutant allowed to be discharged from the treatment system or the combined sources shall not exceed the sum of the quantities of pollutant (mass/time) allowed to be discharged from each separate source.

The 129 PRIORITY POLLUTANTS

Compound Name

1. *acenaphthene
2. *acrolein
3. *acrylonitrile
4. *benzene
5. *benzidene
6. *carbon tetrachloride (tetrachloromethane)

*Chlorinated benzenes (other than dichlorobenzenes)

7. chlorobenezene
8. 1,2,4-trichlorobenzene
9. hexachlorobenzene

*Chlorinated ethanes (including 1,2-dichloroethane, 1,1,1-trichloroethane and hexachloroethane)

10. 1,2-dichloroethane
11. 1,1,1-trichloroethane
12. hexachloroethane
13. 1,1-dichloroethane
14. 1,1,2-trichloroethane
15. 1,1,2,2-tetrachloroethane
16. chloroethane

*Chloroalkyl ethers (chloromethyl, chloroethyl and mixed ethers)

17. bis (chloromethyl) ether
18. bis (2-chloroethly) ether
19. 2-chloroethyl vinyl ether (mixed)

*Chlorinated naphtalene

20. 2-chloronaphthalene

*Chlorinated phenols (other than those listed elsewhere; includes trichlorophenols and chlorinated cresols)

21. 2,4,6- trichlorophenol
22. parachlorometa cresol
23. *chloroform (trichloromethane)
24. *2-chlorophenol

*Dichlorobenzenes

25. 1,2-dichlorobenzene
26. 1,3-dichlorobenzene
27. 1,4-dichlorobenzene

*Dichlorobenzidine

28. 3,3'-dichlorobenzidine

*Dichloroethylenes (1,1-dichloroethylene and 1,2-dichloroethylene)

29. 1,1-dichloroethylene
30. 1,2-trans-dichloroethylene
31. *2,4-dichlorophenol

*Dichloropropane and dichloropropene

32. 1,2-dichloropropane
33. 1,2-dichloropropylene (1,3-dichloropropene)
34. *2,4-dimethylphenol

*Dinitrotoluene

35. 2,4-dinitrotoluene
36. 2,6,-dinitrotoluene
37. *1,2-diphenylhydrazine
38. *ethylbenzene
39 *fluoranthene

*Haloethers (other than those listed elsewhere)

40. 4-chlorophenyl phenyl ether
41. 4-bromophenyl phenyl ether
42. bis(2-chloroisopropyl) ether
43. bis(2-chloroethoxy) methane

*Specific compounds and chemical classes as listed in the consent degree.

THE 129 PRIORITY POLLUTANTS (Cont.)

*Halomethanes (other than those listed elsewhere

44. methylene chloride (dichloromethane)
45. methyl chloride (chloromethane)
46. methyl bromide (bromomethane)
47. bromoform (tribromomethane)
48. dichlorobromomethane
49. trichlorofluoromethane
50. dichlorodifluoromethane
51. chlorodibromomethane
52. *hexachlorobutadiene
53. *hexachlorocyclopentadiene
54. *isophorone
55. *naphthalene
56. *nitrobenzene

*Nitrophenols (including 2,4-dinitrophenol and dinitrocresol)

57. 2-nitrophenol
58. 4-nitrophenol
59. *2,4-dinitrophenol
60. 4,6-dinitro-o-cresol

*Nitrosamines

61. N-nitrosodimethylamine
62 N-nitrosodiphenylamine
63. N-nitrosodi-n-propylamine
64. *pentachlorophenol
65. *phenol

*Phthalate esters

66. bis(2-ethylhexyl) phthalate
67. butyl benzyl phthalate
68. di-n-butyl phtalate
69. di-n-octyl phtalate
70. diethyl phtalate
71. dimethyl phthalate

*Polynuclear aromatic hydracarbons

72. benzo (a)anthracene (1,2-benzanthracene)
73. benzo (a) pyrene (3,4-benzopyrene)
74. 3,4-benzofluoranthene
75. benzo(k)fluoranthane (11,12-benzofluoranthene)
76. chrysene
77. acenaphthylene
78. anthracene
79. benzo(ghi)perylene (1,12-benzoperylene)
80. fluorene
81. phenanthrene
82. dibenzo (a,h)anthracene (1,2,5,6-dibenzanthracene)
83. indeno (1,2,3-cd) pyrene (2,3,-o-phenylenepyrene)
84. pyrene
85. *tetrachloroethylene
86. *toluene
87. *trichloroethylene
88. *vinyl chloride (chloroethylene)

Pesticides and Metabolites

89. *aldrin
90. *dieldrin
91. *chlordane (technical mixture & metabolites)

*DDT and metabolites

92. 4,4'-DDT
93. 4,4'-DDE(p,p'DDX)
94. 4,4'-DDD(p,p'TDE)

*endosulfan and metabolites

95. a-endosulfan-Alpha
96. b-endosulfan-Beta
97. endosulfan sulfate

*endrin and metabolites

98. endrin
99. endrin aldehyde

*heptachlor and metabolites

100. heptachlor
101. heptachlor epoxide

*hexachlorocyclohexane (all isomers)

102. a-BHC-Alpha
103. b-BHC-Beta
104. r-BHC (lindane)-Gamma
105. g-BHC-Delta

*polychlorinated biphenyls (PCB's)

106. PCB-1242 (Arochlor 1242)
107. PCB-1254 (Arochlor 1254)
108. PCB-1221 (Arochlor 1221)
109. PCB-1232 (Arochlor 1232)
110. PCB-1248 (Arochlor 1248)
111. PCB-1260 (Arochlor 1260)
112. PCB-1016 (Arochlor 1016)
113. *Toxaphene
114. *Antimony (Total)
115. *Arsenic (Total)

THE 129 PRIORITY POLLUTANTS (Cont.)

116. *Asbestos (Fibrous)
117. *Beryllium (Total)
118. *Cadmium (Total)
119. *Chromium (Total)
120. *Copper (Total)
121. *Cyanide (Total)
122. *Lead (Total)
123. *Mercury (Total)
124. *Nickel (Total)
125. *Selenium (Total)
126. *Silver (Total)
127. *Thallium (Total)
128. *Zinc (Total)
129. **2,3,7,8-tetrachlorodibenzo-p-dioxin (TCDD)

** This compound was specifically listed in the consent degree. Because of the extreme toxicity (TCDD). We are recommending that laboratories not acquire analytical standard for the compound.

Area Run-off Limitations

The following limitations are also expected to be applicable to the material storage run-off, which includes the rainfall run-off from or through any coal, ash, or other material storage pile:

TOTAL SUSPENDED SOLIDS	pH
not to exceed 50 mg/l	6.0 - 9.0

Treatment facilities designed to meet the above limitations must be adequate to treat the flow resulting from the 10-year-24-hour rainfall event. Any untreated overflow from a properly designed treatment facility, resulting from flow in excess of these design criteria, is not subject to the above limitations.

The standard originally issued by the EPA in 1974 also applied to construction run-off. However, the application of the standard to construction run-off was subsequently dropped as a result of the decision by the Fourth Circuit Court in the Appalachian Power et. al. vs. Train, July 1976, Court proceedings. However, if construction run-off is a point discharge, as opposed to sheet flow, a NPDES permit regulating such run-off is required.

Thermal Effluent Guidelines

The thermal effluent guidelines, issued by the EPA in 1974, simply state that there shall be no discharge of heat except for cold side blowdown from recirculating cooling systems and cooling ponds. Exemptions from this standard were provided in Section 316(a) of FWPCA, in which the requirements for exemption are detailed. Later, these thermal effluent guidelines were remanded in the Appalachian Power et. al. vs. Train decision, July 1976. Effectively, at present, there are no federal thermal discharge limitations.

2.2 State of Tennessee Effluent Criteria

The State of Tennessee effluent criteria expected to be applicable to a wastewater discharge from the subject project are shown in Exhibit A-4. The applicable state criteria are contained in the Proposed Rules of Tennessee Department of Public Health, Bureau of Environmental Health Services - Division of Water Quality Control, Effluent Limitations and Standards (Chapter 1200-4-5) for Industrial Wastewater Treatment Plants.

NPDES permits regulating wastewater discharges are issued by the Commissioner of the Tennessee Department of Public Health, or his duly authorized representative. In granting a NPDES permit, the Commissioner has authority to impose such conditions, including effluent standards and conditions, terms of periodic review, monitoring, recording, reporting, and inspection, as are necessary to:

- abate existing pollution,
- reclaim polluted waters,
- prevent future pollution, and
- plan for the future utilization of the State's water resources.

A set of effluent limitations will be specified in the permit which will be indicative of adequate operation or performance of treatment units used and which will appropriately limit those harmful parameters present in the wastewater. In the absence of federal guidelines for a particular pollutant, treatment units will be required to achieve as a minimum, the effluent limitations shown in Exhibit A-4, when such parameters are present as a result of the process causing the contamination or discharge. In addition, the permit may be expected to include the most stringent effluent limitations and schedule of compliance either promulgated by the board, or necessary to comply with federal laws or regulations.

Exhibit A-4

STATE OF TENNESSEE EFFLUENT LIMITATIONS AND STANDARDS

FOR

INDUSTRIAL WASTEWATER TREATMENT PLANTS

Parameter	Daily Maximum Concentrations (mg/l)
Aluminum	250
Antimony	1.0
Arsenic	1.0
Barium	5.0
Boron	500
Cadmium	0.01
Chlorine (total)	2.0
Chromium (total)	3.0
Cobalt	10
Copper	1.0
Cyanide	0.05
Fluoride (soluble)	20.0
Iron (total	10.0
Lead	0.1
Manganese	10.0
Mercury	0.05
Nickel	3.0
Oil and Grease	(a) 30 (b) No visible or floating oil or grease
pH (6.0 to 9.0)	
Phenols	1.0
Selenium	0.01
Silver	0.05
*Suspended Solids	40
Settleable solids	0.5 ml/l
Zinc	2.0

* In the case of biological treatment units, the daily maximum TSS may be 120 mg/l.

Where it is practical and economically feasible to establish a closed cycle water reuse system with zero discharge, such requirements may be made a part of the permit. As the subject project will utilize a deasher with a close-loop water recirculation system, it is conceivable that the overall project operation may lend itself to zero discharge. However, where it can be demonstrated that concentrations in excess of those shown in Exhibit A-4 which is not covered by federal guidelines, have resulted from the utilization of water conservation practices, allowances may be made in the determination of effluent limitations. It is possible that parameters other than those listed in Exhibit A-4 may be limited in accordance with current technological capabilities. Where it can be demonstrated that treatment by practical conventional processes cannot provide compliance within the limitations shown in Exhibit A-4, other reasonable effluent limitations may be established. It is the intention of the state regulations that each permit include limitations of those parameters listed that are directly attributable to the process causing the discharge for which the permit is granted, rather than requiring limitations or monitoring of all parameters shown in Exhibit A-4.

7.3.3. Construction Approval Permit

Prior to the initiation of a NPDES permit application, a construction approval permit will be required. A construction approval permit, issued by the Office of the Commissioner of the State of Tennessee, is required for any new or altered wastewater treatment or water quality control facility regardless of capacity. The official letter issued by the Commissioner's Office, approving a project for construction in accordance with submitted plans and specifications bearing the official "Approved for Construction" stamp of the Commissioner shall constitute a valid permit to construct, in-

stall or modify in conformance with all conditions shown and specified in the approved plans and specifications. The submission of letters, plans, specifications, etc., constitutes an application for a permit. Initially, a written request is submitted to the Commissioner requesting an informal discussion of the proposed project. Within 30 days from the receipt of the request, an informal discussion will be held and preliminary data pertinent to the facility discussed. If the preliminary data is sufficient to indicate scope and extent of the wastewater treatment project, the representatives of the Commissioner will outline general requirements for the project's approval. The representatives may specify, in the letter of acceptance and approval of the preliminary data, any specific requirements, such as effluent limitations or other restrictions, which must be met by the proposed facility. All submittals of final plans and specifications should be completed at least 30 days prior to the time action is desired.

A.4.0 SUMMARY OF SOLID WASTE DISPOSAL REQUIREMENTS

The disposal of the solid waste generated by the 20 MWt HRSR project will have to comply with existing State of Tennessee regulations, including modifications thereto which are expected in compliance with the provisions of the Federal Resource Conservation and Recovery Act (RCRA) of 1976.

A.4.1 RCRA

RCRA imposes requirements on the disposal of solid waste and creates a new permit program covering waste disposal facilities and a "cradle-to-grave" manifest system to manage and continuously account for solid waste, from generator to ultimate disposal. Permit requirements include:

- Permit required for all hazardous waste disposal, treatment or storage.
- Permit application is to include extensive supporting data, with possible public hearings required as part of the permit process
- Imposition of design and operation requirements
- Enforcement by injunctive relief, civil penalties and criminal fines.

The EPA is expected to promulgate the basic regulations sometime during 1980, and it can be expected that the state agencies will assume responsibility for permit program implementation as federal EPA established criteria are satisfied.

A.4.1.1 Hazardous Waste

RCRA defines "hazardous waste" as "a solid waste, or combination of solid wastes, which because of its quantity, concentration or physical or chemical or infectious characteristics, may pose a substantial present or potential hazard to human health or the environment when improperly treated, stored, transported, or disposed of, or otherwise managed."

In the December 18, 1978 Federal Register, EPA proposed the following four basic criteria for identification of a hazardous waste:

- Ignitability
- Corrosiveness
- Reactivity
- Toxicity

In addition, EPA proposed a list of specific wastes presumed to be hazardous and to be regulated as such unless the generator can demonstrate that the waste material does not meet the criteria.

RCRA established requirements for record keeping, labeling, use of appropriate containers for hazardous waste, furnishing of information on the general chemical composition of hazardous wastes, use of the manifest system, and submission of reports covering quantities and disposition of all hazardous waste generated during a specific time period. Proposed Hazardous Waste Manifest and Hazardous Waste Generator Report sample forms, proposed by EPA, are presented in Exhibits A-5 and A-6, respectively. RCRA contains provisions regulating waste transporters and operators of hazardous waste treatment and storage or disposal facilities.

Exhibit A-5

0-01-C]

HAZARDOUS WASTE MANIFEST

MANIFEST DOCUMENT NUMBER

IDENTIFICATION

	I.D. CODE	NAME	ADDRESS	DATE SHIPPED OR RECEIVED
GENERATOR				
TRANSPORTER				
TSDF (TREATMENT, STORAGE, OR DISPOSAL FACILITY)				

WASTE INFORMATION

SHIPPING DESCRIPTION	HAZARD CLASS	QUANTITY	UNIT	

SAMPLE

EMERGENCY INFORMATION

IMMEDIATE RESPONSE INFORMATION — PHONE NUMBER

SPECIAL HANDLING INSTRUCTIONS

COMMENTS

CERTIFICATION

This is to certify that the above-named materials are properly classified, described, packaged, marked and labeled, and are in proper condition for transportation according to the applicable regulations of the Department of Transportation and the U.S. Environmental Protection Agency.

GENERATOR SIGNATURE — DATE

This is to certify acceptance of the hazardous waste shipment.

TRANSPORTER SIGNATURE — DATE

This is to certify acceptance of the hazardous waste for treatment, storage, or disposal

TSDF SIGNATURE — DATE

HAZARDOUS WASTE GENERATOR REPORT

IDENTIFICATION

NAME

ADDRESS

GENERATOR IDENTIFICATION CODE

CLOSING DATE

WASTE INFORMATION

TREATMENT, STORAGE OR DISPOSAL FACILITY I.D. CODE	MANIFEST DOCUMENT NUMBER	SHIPPING DESCRIPTION	QUANTITY	UNIT OF MEASURE

SAMPLE

COMMENTS

CERTIFICATION

I have personally examined and am familiar with the information submitted in this certification, and I hereby certify under penalty of law that this information is true, accurate, and complete. I am aware that there are significant penalties for submitting false information, including the possibility of fine and imprisonment."

SIGNATURE DATE

4.1.2 Non-hazardous Waste

For non-hazardous waste disposal, RCRA directs EPA to promulgate criteria for classification of an approved disposal facility as a sanitary landfill. Future EPA regulations and criteria will probably preclude leaching, run-off of ground water, open burning and other direct environmental abuses.

A.4.2. Regulations Governing Solid Waste Processing And Disposal In Tennessee

The state regulations governing hazardous solid waste disposal to be promulgated in compliance with RCRA requirements are set forth in the provisions of the Proposed Hazardous Waste Management Regulations which are designed to implement the Tennessee Hazardous Waste Management Act (amended 1979). Final promulgation of these regulations is expected in mid 1980. Regulations governing the disposal of non-hazardous solid wastes, which are expected to be designated as special waste by the State of Tennessee, will be subject to the provisions of the Tennessee Solid Waste Disposal Act (amended 1977).

A.4.3. Hazardous And Non-hazardous Waste Determination

The impact of the state regulations governing the disposal of the solid waste generated by the 20 MWt HRSR project will depend to a large extent as to whether the waste is to be classified as hazardous or non-hazardous. The classification of the waste is determined by the waste generator, after project startup, in accordance with the procedure outlined in Rules 3 thru 5 of the Proposed Hazardous Waste Management Regulations, presented in Appendix A-3, which include the requirement for chemical and leachate analyses. The Commissioner of the Tennessee Department of Health, or his authorized representative, has the authority to require any waste generator who he reasonably believes is generating a hazardous waste to evaluate that waste and file notification with the Department of Public Health.

The solid waste initially generated by the subject project would have to be temporarily stored in an environmentally acceptable manner, which of necessity would preclude air and water contamination due to uncontrolled dusting or area run-off, until the analyses are completed, and the designation of the nature of the waste as either hazardous or non-hazardous is determined, and final disposition at a suitable facility is approved.

A.4.4 Hazardous Waste Management

If the waste generated by the subjectproject is determined to be hazardous, the subject project would be classified as a hazardous waste generator and, as such, must notify the Tennessee Department of Health of its activities on the forms provided by the Department within 90 days after the date of initial generation in accordance with the procedures outlined in Rule 6 of the Regulations. A draft of the Generator Notification Document is shown in Exhibit A-7. Hazardous waste generators may not transport or dispose of their waste until they have complied with the notification requirement.

In addition, a hazardous waste generator is held responsible for maintaining an up-to-date notification file in accordance with the procedure outlined in Rule 6. This entails notifying the Department, in writing, of significant changes which include, but are not limited to, changes in waste composition, operation or ownership of the generating facility, and other reported administrative data. The Department may, upon request, grant up to 60 days additional time in cases where retesting of the waste is deemed a necessity.

In the event of accidental hazardous waste generation, the Department shall be notified, in writing, within 30 days of the incident (Rule 6), identifying the quantity, composition, hazardous characteristics of the waste, and the facility at which it was generated. Additional time may be granted by the Department as warranted to obtain the necessary data. The

State of Tennessee
Department of Public Health
Division of Solid Waste Management

326 Capitol Hill Building
721 Seventh Ave. N.
Nashville Tennessee 37219

DRAFT

Generator Notification Document

Tennesse Hazardous Waste Management Program

PART I

ORGANIZATION NAME | DUNS NUMBER

MAILING ADDRESS | STREET OR BOX NUMBER | CITY | STATE | ZIP

SITE LOCATION OR ADDRESS

SIC NUMBERS | NUMBER OF EMPLOYEES | YEARS IN OPERATION

OWNER NAME | TELEPHONE NUMBER

MANAGER NAME | TELEPHONE NUMBER

PRINCIPAL TECHNICAL CONTACT | TELEPHONE NUMBER

EMERGENCY TELEPHONE NUMBERS AND INSTRUCTIONS

ENVIRONMENTAL PERMIT NUMBERS AND TYPES

Does your facility/operation generate a waste which is listed among those in the Tennessee Hazardous Waste Management Regulations, Rule 4?

Yes ☐ No ☐

Does your facility/operation generate a waste which meets any of the criteria set out in the Tennessee Hazardous Waste Management Regulations, Rule 3?

Yes ☐ No ☐

I hereby certify that the information in all parts of this document is true, accurate, and complete. I am aware that there are significant penalties for submitting false or imcomplete information. I understand that all information in this document may be made available to the public, except those sections identified in Part IV of this document, which will be governed in accordance with the Tennessee Hazardous Waste Management Regulations. I am authorized to sign official documents for my organization.

NAME | TITLE | DATE

PART II

DRAFT

WASTE NAME

DESCRIBE GENERATION PROCESS

Is this waste among those listed in the Tennessee Hazardous Waste Management Regulations Rule ?

Yes ☐ No ☐

Does this waste qualify as hazardous under the criteria set out in the Tennesseee Hazardous Waste Management Regulations, Rule 4?

Yes ☐ No ☐

HAZARDOUS CHARACTERISTICS

RISK LEVEL UPPER	RISK LEVEL LOWER	CHARACTERISTIC
☐	☐	Ignitable
☐	☐	Corrosive
☐	☐	Reactive
☐	☐	Infectious
☐	☐	Toxic/Inorganic
☐	☐	Toxic/Organic
☐	☐	Toxic/Carcinogen

PHYSICAL FORM

☐ Liquid, Water Base ☐ Solid
☐ Liquid, Other Base ☐ Granular Solid
☐ Contained Gas ☐ Emulsion
☐ Slurry, ___% solid
☐ Sludge, Water Base: ___% solid
☐ Sludge, Other Base: ___% solid

COMPONENTS AND CONCENTRATIONS

pH _____ Density _____ Flash Point _____

ELEMENT OR COMPOUND	RANGE LIMITS UPPER	RANGE LIMITS LOWER	UNITS

Exhibit A-7 (Cont.)
Sheet 2 of 4

PART II CONT'D

DRAFT

Do you anticipate any changes in your facility or operations which would significantly change the chemical composition, physical form, or rate of generation of this waste?

Yes ☐ No ☐

QUANTITY GENERATED	UNITS	FREQUENCY	☐ Periodic	☐ Continuous	☐ Variable

Is waste shipped off-site? ☐ Yes ☐ No

ONSITE STORAGE

Duration of storage: ☐ None ☐ Less than 180 days ☐ More than 180 days

Method of storage: ☐ Basin ☐ Surface Impoundment, Lined ☐ Tank ☐ Surface Impoundment, Unlined ☐ Other ☐ Containers Type: _____

COMMENTS:

ONSITE TREATMENT

☐ None ☐ Resource Recovery ☐ Chemical ☐ Physical ☐ Biological ☐ Thermal ☐ Other

COMMENTS:

ONSITE DISPOSAL

☐ Landfill ☐ Underground Injection ☐ Landfarm ☐ Deep Geologic Isolation ☐ Surface Impoundment ☐ Other

COMMENTS

Exhibit A-7 (Cont.)
Sheet 3 of 4

THIS PAGE

WAS INTENTIONALLY

LEFT BLANK

waste shall not be transported or disposed of until so approved by the Department. The Department shall respond to such notifications within 5 days of receipt of the same. In emergency situations, notifications and responses will be conducted promptly via telephone, with written follow-up required.

Waste generators are required to manage their hazardous waste in accordance with the Regulations in a manner that will minimize the possibility of dangerous uncontrolled reaction, the release of leachate, noxious gases or odors, fires, explosion, or the discharge of such waste. The utilization of best practical methods are required to reduce the quantity or hazardous waste generated, and to promote its reuse, recycle, recovery, or treatment prior to disposal (Rule 2).

Generators of waste are required to become familiar with the hazards associated with their hazardous wastes and the procedure to be followed in emergency situations. All accidents or other occurrences which may result in the discharge of such wastes to the environment shall be immediately reported to the Tennessee Office of Civil Defense (Telephone No. 1-800-342-1328) (Rule 2).

If the hazardous waste is managed off-site, the generator shall assure that it is transported and stored, treated, or disposed in the State of Tennessee only by persons who are properly registered with the Department for such duties in accordance with the Regulation (Rule 2). A generator who temporarily stores hazardous waste at an appropriate hazardous waste facilty is jointly responsible with the storage facility operator for assuring that the waste reaches an appropriate hazardous waste treatment or disposal facility within the allowable time limit. Hazardous waste may not be stored by a facility for more than one (1) year without prior approval from the Department.

Generators are allowed to temporarily store hazardous wastes at the plant at which it was generated (Rule 2) provided that:

1. Such storage is in containers or above ground storage tanks,

2. The hazardous waste is stored for less than 180 days prior to transport off-site or transfer to an on-site treatment or disposal facility. The generator shall be able to demonstrate the date storage commenced by proper marking of the container, recordkeeping, or other effective means. The 180-day time limit may be extended by the Commissioner on a case-by-case basis upon his determination that additional time is necessary to generate sufficient quantities to be reasonably shipped and that such extended storage will not result in a violation of Tennessee air and water pollution control regulations.

3. Storage at any on-site treatment or disposal facility shall be subject to the standards for hazardous waste treatment, storage, and disposal facilities.

In special cases, which may include the subject project, the Commissioner of the Tennessee Department of Public Health or his authorized representative may grant special exemptions from the standards for facilities which:

1. Recover materials or energy from hazardous wastes, or
2. Utilize advanced technology which the Commissioner determines will significantly improve the state-of-the-art for hazardous waste treatment, storage, or disposal.

A.4.4.1 Transportation of Hazardous Wastes

A hazardous waste generator is required to comply with the following regulations (Rules 2 and 7), governing the transportation of hazardous waste:

A. Use of Only Registered Transporters and Facilities - The generator is required to utilize, and be responsible for selecting, only transporters and treatment,

storage, and/or disposal facilities which are properly registered with the Department for such hazardous waste activities.

B. Manifest and Reporting Responsibilities - Generators who ship their hazardous wastes to off-site treatment, storage, and/or disposal facilities are required to manifest and report such shipments. A draft copy of the manifest form and instructions are shown in Exhibit A-8 If the shipment is destined for a facility in another state and that state has promulgated or authorized a hazardous waste manifest or shipping papers, then the generator may use that state's form. If the state of the receiving facility has no official manifest or shipping papers, then the generator shall obtain the manifest(s) to be used from the Department.

C. Identification of Containers - The generator is required to mark or label each container of hazardous waste to be shipped as follows:

HAZARDOUS WASTE
Tennessee Law Prohibits Improper Disposal
Generator I.D. Code_____
Manifest Number_____

D. Recordkeeping - The generator is required to retain for at least three years:

1. The generators manifest copy, as well as the manifest original returned by the treatment, storage, and/or disposal facility.

2. A copy of the quarterly hazardous waste shipment report submitted to the Department.

PLEASE COMPLETE COPIES LEGIBLY

HAZARDOUS WASTE MANIFEST

MANIFEST NUMBER _____

IDENTIFY

	a. ORGANIZATIONAL NAME	b. I.D. CODE	c. ADDRESS	d. TELEPHONE	e. DATE
1. GENERATOR					
2. TRANSPORTER ACCEPTING					
3. TRANSPORTER DELIVERING					
4. TSDF					

DESCRIBE

5. a. SHIPPING DESCRIPTION	b. HAZARD CLASS	c. VOLUME/WEIGHT NUMBER	c. VOLUME/WEIGHT UNITS	d. GENERATOR ITEM COUNT NUMBER	d. GENERATOR ITEM COUNT CONTAINER TYPE	e. WASTE CODE	f. TSDF CHECK NUMBER	f. TSDF CHECK CTNR/UNITS

NOTE

6. IMMEDIATE EMERGENCY RESPONSE INFORMATION

24-HOUR EMERGENCY TELEPHONE NUMBERS

In the event of a spill contact the National Response Center, U.S. Coast Guard, 800-424-8802 for emergency assistance.

7. SPECIAL HANDLING INSTRUCTIONS

CERTIFY

8. GENERATOR - This is to certify that the above-named materials are properly classified, described, packaged, marked and labeled, and are in proper condition for transportation according to the applicable regulations of the U.S. Department of Transportation and the U.S. Environmental Protection Agency. SIGN _____ PRINT _____ DATE _____

9. TRANSPORTER ACCEPTING - This is to certify that the waste(s) and quantity described above has been accepted by me for delivery to the TSDF identified above. SIGN _____ PRINT _____ DATE _____

10. TRANSPORTER DELIVERING - This is to certify that the waste(s) and quantity described above has been delivered by me to the TSDF identified above. SIGN _____ PRINT _____ DATE _____

11. TSDF - This is to certify that the waste(s) and quantity described above has been accepted by me for treatment, storage, and/or disposal. SIGN _____ PRINT _____ DATE _____

12. COMMENTS

DRAFT

A37

Exhibit A-8
Sheet 1 of 2

HAZARDOUS WASTE MANAGEMENT PROGRAM
Division of Solid Waste Management
Tennessee Department of Public Health

352 Capitol Hill Building
Nashville, Tennessee 37219
Telephone (615) 741-3424

HAZARDOUS WASTE MANIFEST INSTRUCTIONS

Tennessee requires generators to notify the Division and transporters and TSDF (Treatment, Storage, and/or Disposal Facilities) to register with the Division as part of Tennessee's Hazardous Waste Management Program. A key part of the program is the hazardous waste manifest, which must accompany each shipment from the point of generation to the point of final disposition. Generators and TSDF report quarterly to the Division information taken from the manifests used during the quarter. To facilitate the Division's handling of the reports, the Division assigns organization identification codes and unique generator waste codes. Full instructions and assistance for shipping hazardous wastes and handling the manifest are available from the Division. When a hazardous waste manifest is properly completed, it meets all the requirements of a U.S. DOT shipping paper, and it should be handled as a U.S. DOT shipping paper. Please legibly complete all copies.

Emergencies: Report to the National Response Center at (800) 424-8802. In Tennessee, report to the Tennessee Office of Civil Defense at (615) 741-5181. Call the generator using the 24 hour emergency telephone numbers on the face of the manifest. Chemical information may be obtained from CHEMTREC at (800) 424-9300.

GENERATOR, or his authorized agent, enters prior to shipment the following: (If more than three wastes are included in a shipment, fully complete additional manifests.)

1. Identify the organizational names, I.D. codes, mailing addresses, and telephone numbers with area code of the generator, transporter(s) and TSDF. Give the date shipped on line 1e. If there is only one transporter, enter "SAME" on line 3a. If the transporter delivering is unknown, leave line 3 blank.
2. Describe in line 5 the hazardous wastes shipped by the:
   (a) U.S. DOT shipping name identified in 49 CFR 172. If (1) the waste is not regulated by U.S. DOT, or (2) the U.S. DOT shipping name is not applicable or (3) contains "NOT OTHERWISE SPECIFIED" or "NOS", enter the shipping description supplied by the Division;
   (b) U.S. DOT Hazard Class. If (1) the waste is not regulated by the U.S. DOT, or (2) the U.S. DOT hazard class is not applicable or (3) is "OTHER REGULATED MATERIALS" or "ORM", enter the Hazard Class supplied by the Division;
   (c) volume or weight in units of pounds, tons, gallons, or cubic yards;
   (d) number of containers and type including the size of the container. For examples, 55-gal. drum, 42-gal. barrel, 1 tank truck;
   (e) waste code assigned to the generator's waste by the Division.
3. Note (line 6) the directions for immediate actions to be taken if a spill or other emergency occurs. Include telephone number(s) where generator assistance can be obtained 24 hours a day;
   (line 7) the special instructions necessary or desirable to assure safe handling of the hazardous wastes.
4. Certify in the accepting transporter's presence by signing, printing the signer's name, and giving the date signed. Retain the yellow copy and give the other copies to the accepting transporter.

TRANSPORTER(S):

1. Reviews the manifest information prior to shipment for accuracy, completeness, and safe handling; and refuses the shipment if the manifest is incorrectly completed.
2. Enters the date the shipment is accepted on line 2e.
3. Certifies the manifest in the generator's presence by signing, printing the signer's name, and giving the date of signing.
4. If the shipment is transferred to another transporter, obtains from the other transporter written confirmation of the transfer which includes the manifest numbers of the shipment transferred. Transfers the original manifest and two copies to the delivering transporter, who completes line 3 to identify himself.
5. Prior to delivery, describes in Comments (line 12) any losses or other changes in quantity, quality, or packaging of the hazardous wastes.
6. After the TSDF operator has checked the shipment and completed the rest of the manifest, certifies in the TSDF operator's presence by signing, printing the signer's name, and giving the date signed.
7. Returns the manifest to the TSDF operator for his certification, then retains the pink copy.
8. If the delivery is not made, immediately contacts the generator for instructions.

TSDF OPERATOR, or his authorized agent:

1. Checks the wastes received and the manifest prior to accepting the shipment, and refuses the shipment if the manifest is incorrectly completed.
2. Enters the date received on line 4e.
3. Enters for each waste described either the volume/weight or item count received.
4. Describes in Comments (line 12) any descrepancies between the shipment received and the manifest.
5. After the delivering transporter has certified the manifest, certifies in the delivering transporter's presence by signing, printing the signer's name and giving the date signed.
6. Retains the blue copy and sends the original to the generator.

A38

Exhibit A-8 (Cont.)
Sheet 2 of 2

E. Assured Acceptance - A generator is required not to ship hazardous waste off his plant site without having received prior assurance of acceptance from the designated treatment, storage, and/or disposal facility. In the event that a waste shipment is subsequently rejected by the facility operator, the generator shall accept return of the waste or make provision for its acceptance by another treatment, storage, and/or disposal facility.

A.4.5. Non-hazardous Waste Management

If the waste generated by the subject project is determined not to be hazardous, it would then be classified as a special solid waste. As such, it would be subject to disposal at a facility selected from a list of proposed facilities supplied by the waste generator and approved by the Division of Solid Waste Management of the State of Tennessee. The list of candidate facilities would be restricted to disposal facilities which are in compliance with the Tennessee Solid Waste Disposal Act, as amended in 1977, and could possibly include special handling requirements.

A possible acceptable disposal facility could include a compatible landfill site. A special solid waste information form, applicable to non-hazardous waste disposal is shown in Exhibit A-9. Submission of the special solid waste information form is essentially the only documentation required for non-hazardous waste disposal in the State of Tennessee.

Exhibit A-9
Sheet 1 of 2

REQUIREMENTS FOR APPROVAL OF A "SPECIAL" SOLID WASTE

Regulation 6, Section C-1-j of the Regulations Governing Solid Waste Processing and Disposal in Tennessee concerns "handling of special wastes." This section states that "Dead animals, sewage solids or liquids, and other materials which are either hazardous or hard to manage shall be disposed of in a sanitary landfill only if special provisions are made for such disposal and are approved by the Department."

The following shall be submitted to fulfill the requirements of Regulation 6, Section C-1-j:

1. Physical Characteristics

   a. State (solid, liquid, sludge, slurry) @ temperature.

   b. Color

   c. Moisture Content (percent dry weight basis) if applicable.

   d. Density ($lb/ft.^3$)

2. Chemical Characteristics

   a. Chemical Analysis - Identify specific compounds.

      (1) Percentage of specific compounds present on a dry weight basis.

      (2) pH

      (3) Solubility at point source pH and at pH 4 and pH 10.

3. Generation Source

   a. Schematic flow diagram of the manufacturing process which creates the waste stream

   OR

   b. Schematic flow diagram of waste treatment facilities if special waste is resultant from waste treatment.

4. Quantity

   a. Amount taken to processing or disposal facility per trip (lbs. or yds. 3).

   b. Number of trips in a stated time duration (per day, week, month).

5. Location, owner and registration number of the site at which processing or disposal will occur (if determined).

Upon receipt of this information, this office will request a personal interview so that a visual inspection of the waste can be made.

ATTACHMENT A-1

STATE OF TENNESSEE

CONSTRUCTION AND OPERATING PERMIT APPLICATION SET

INSTRUCTION SHEET, APC-20

PERMIT APPLICATION - GENERAL INFORMATION

The following instructions are designed to aid industry and governmental agencies in filling out the APC-20 form. The numbers below refer respectively to the questions asked on the form APC-20.

1. No explanation needed.

2. List address you wish permit to be mailed to.

3. List address where source is located. In the case where the source is being moved, list address where source will be moved to.

4. No explanation needed.

5. Complete only if known.

6-10. No explanation needed.

11. If a permit to construct is requested, that box is checked and the estimated starting date for construction and the estimated completion date for construction listed. If the construction involved moving an existing source, the transfer of location block is also checked and the estimated date of start up listed.

    If a permit to operate is requested for the first time, the permit to operate requested block is checked. If a renewal of an existing permit is desired, the "Air Contaminant Source has not been altered" block should be checked.

12. No application for permit will be processed unless it is signed. The man directly responsible for operating the local plant should sign.

13. No explanation needed.

PERMIT APPLICATION - APC 20

MAIL TO: TENNESSEE DEPARTMENT OF PUBLIC HEALTH
DIVISION OF AIR POLLUTION CONTROL
256 CAPITOL HILL BUILDING
NASHVILLE, TENNESSEE 37219

DO NOT WRITE IN THIS SPACE

COMPANY NO. _____

LOG NO. _____

REVIEWED BY _____

PERMIT NO. _____

1. PERMIT TO BE ISSUED TO: (NAME OF CORPORATION, COMPANY, INDIVIDUAL OWNER OR GOVERNMENTAL AGENCY THAT IS TO OPERATE THE EQUIPMENT)

_____

2. MAILING ADDRESS _____

_____
CITY STATE ZIP CODE PHONE

3. ADDRESS AT WHICH SOURCE IS TO BE OPERATED _____

_____
CITY COUNTY ZIP CODE PHONE

4. TYPE OF ORGANIZATION: CORPORATION ☐ PARTNERSHIP ☐ INDIVIDUAL OWNER ☐ GOVERNMENTAL AGENCY ☐

5. EMISSION SOURCE NUMBER _____ 6. STANDARD INDUSTRIAL CLASSIFICATION OF CO. ☐☐☐☐

7. BRIEF DESCRIPTION OF EMISSION SOURCE FOR WHICH PERMIT IS DESIRED: _____

_____

8. LATITUDE AND LONGITUDE OF AIR CONTAMINANT SOURCE _____ ° ' " _____ ° ' "

9. COST OF MODIFICATION $ _____ COST OF AIR POLLUTION CONTROL EQUIPMENT $ _____

10. IF THIS AIR CONTAMINANT SOURCE HAS A PREVIOUS WRITTEN PERMIT GIVE NAME OF CORPORATION, COMPANY OR INDIVIDUAL OWNER THAT OPERATED THIS SOURCE AND STATE PREVIOUS TENNESSEE DIVISION OF AIR POLLUTION CONTROL PERMIT NUMBER, IF KNOWN.

NAME _____ PERMIT NUMBER _____

11. PRESENT STATUS OF AIR CONTAMINANT SOURCE (CHECK AND COMPLETE APPLICABLE ITEMS)

☐ PERMIT TO CONSTRUCT REQUESTED - Est. Starting Date _____ Est. Completion Date _____

☐ CONSTRUCTION COMPLETED - Date _____ ☐ PERMIT TO OPERATE REQUESTED

☐ TRANSFER OF LOCATION - Est. Date _____ ☐ AIR CONTAMINANT SOURCE HAS NOT BEEN ALTERED

12. _____
SIGNATURE OF RESPONSIBLE MEMBER OF FIRM DATE OF APPLICATION

13. TYPE OR PRINT NAME AND OFFICIAL TITLE OF PERSON SIGNING THIS APPLICATION

NAME _____

TITLE _____

PHONE _____

SUBMIT TWO COPIES OF THIS FORM

TDPH-APC
PH-0425

POLLUTION REDUCTION DEVICES OR METHODS

000	No Control Equipment
001	Wet Scrubber - High Efficiency
002	Wet Scrubber - Medium Efficiency
003	Wet Scrubber - Low Efficiency
004	Gravity Collector - High Efficiency
005	Gravity Collector - Medium Efficiency
006	Gravity Collector - Low Efficiency
007	Centrifugal Collector - High Efficiency
008	Centrifugal Collector - Medium Efficiency
009	Centrifugal Collector - Low Efficiency
010	Electrostatic Precipitator - High Efficiency
011	Electrostatic Precipitator - Medium Efficiency
012	Electrostatic Precipitator - Low Efficiency
013	Gas Scrubber
014	Mist Eliminator - High Velocity
015	Mist Eliminator - Low Velocity
016	Fabric Filter - High Temperature
017	Fabric Filter - Medium Temperature
018	Fabric Filter - Low Temperature
019	Catalytic Afterburner
020	Catalytic Afterburner with Heat Exchanger
021	Direct Flame Afterburner
022	Direct Flame Afterburner with Heat Exchanger
023	Flaring
027	Eliminate Coal Combustion
028	Eliminate Coal and Residual Fuel Oil Combustion
029	Change all Fuel Use to Natural Gas
039	Catalytic Oxication - Flue Gas Desulfurization
040	Alkalized Alumina
041	Dry Limestone Injection
042	Wet Limestone Injection
043	Sulfuric Acid Plant - Contact Process
044	Sulfuric Acid Plant - Double Contact Process
045	Sulfur Plant
047	Vapor Recovery System (including condensers, hooding, and other enclosures)
048	Activated Carbon Adsorption
049	Liquid Filtration System
100	Wet Suppression System

If the system has several pieces of connected equipment, indicate the sequence by, for example, 008/011; 80%/80%

SOURCE INVENTORY SHEET

BUSINESS NAME _____ REFERENCE NUMBER _____

OWNER'S NAME _____ CONTACT'S NAME AND TITLE _____

MAILING ADDRESS _____ CITY _____ PHONE _____ ZIP CODE

PLANT ADDRESS _____ CITY _____ PHONE _____

NATURE OF BUSINESS _____

OPERATING SCHEDULE: _____ HOURS/DAY, _____ DAY/WK., _____ WK/YR

NUMBER	* C OR P	EQUIPMENT LIST (GENERAL NAME PLUS DETAILS, INCLUDE STORAGE POINTS)	INPUT RATE (SHOW UNITS)	OUTPUT GOES TO ITEM NUMBER	REMARKS

A45

REVIEWERS NAME _____ SIGNATURE _____ DATE _____

*C, FOR EMISSION CONTROL EQUIPMENT; P, FOR PROCESSING EQUIPMENT

TDPH-APC
176 (1/77)

INSTRUCTION FORM FOR APC-22

The purpose of this sheet is to aid industry and governmental agencies in completing form APC-22. The numbers given below refer respectively to the questions asked on the form APC-22.

1. No explanation needed.

2. PROCESS EMISSION SOURCE NUMBER should be the same as that on the APC-21 form.

3. Any number that can be related to the process emission source diagram.

4-5. No explanation needed.

6-10. Engineering calculations from stack sampling. In certain cases, estimates will be accepted.

11-12. No explanation needed.

13. List control efficiency on all air contaminants listed in 16. Type refers to code number given on the Pollution Reduction Devices or Methods Sheet for the different types of control equipment. This code is found on the back of the APC-20 form.

14-15. No explanation needed.

16. Where data as submitted is based upon approximations or estimates rather than measurement by generally accepted methods, the data should be designated as an estimate. Where such estimates seem unreasonable, clarification or verification will be required.

    It is generally expected that the data supplied in 16 will be obtained by stack sampling in accordance with the procedures set forth in Chapter XII of the Tennessee Air Pollution Control Regulations. The presence or absence of the compounds listed must be designated as absent or present. Additional compounds are listed by the engineering staff under others when it is felt such information is necessary.

STACK EMISSION POINT DATA - APC - 22

MAIL TO: TENNESSEE DEPARTMENT OF PUBLIC HEALTH
DIVISION OF AIR POLLUTION CONTROL
256 CAPITOL HILL BUILDING
NASHVILLE, TENNESSEE 37219

DO NOT WRITE IN THIS SPACE

COMPANY NO. _____

PERMIT NO. _____ P

PROCESS EMISSION SOURCE NO. _____

LOG NO. _____

REVIEWED BY _____

TWO COPIES OF THIS FORM MUST BE FILLED OUT COMPLETELY FOR EACH STACK EMISSION POINT IN THE PROCESS. THE PROCESS EMISSION SOURCE COVER SHEET, APC-21, MUST BE ATTACHED FOR PARTICULATE EMISSIONS ONLY.

1. COMPANY NAME _____
2. PROCESS EMISSION SOURCE NUMBER _____
3. EMISSION POINT NUMBER OR CODE (AS SHOWN ON PROCESS EMISSION SOURCE COVER SHEET). _____
4. INDICATE STACK OR RELEASE POINT HEIGHT ABOVE GRADE _____ FEET.
5. SHOW INSIDE DIAMETER OF STACK OR RELEASE MECHANISM AT TOP _____ FEET
6. SHOW NORMAL EXIT GAS TEMPERATURE _____ °F. 7. SHOW EXIT GAS VELOCITY _____ FT/SEC
8. INDICATE PERCENT OF TIME OVER 125°F _____ %.
9. SHOW EXIT GAS VOLUME FLOW RATE _____ FT^3/SEC @ 70°F AND 1 ATMOS. AND AT STACK CONDITIONS _____ FT^3/SEC
10. SHOW MOISTURE CONTENT _____ (GR./CU. FT. DRY GAS AT 70°F) AND _____ (GR./CU. FT. GAS AT STACK CONDITIONS)
11. SHOW DISTANCE FROM RELEASE POINT TO NEAREST PROPERTY LINE _____ FEET.
12. DIRECTION OF GAS STREAM AS IT LEAVES STACK _____ U-UP, _____ D-DOWN, _____ H-HORIZONTAL
13. AIR POLLUTION CONTROL EQUIPMENT

	AIR CONTAMINANT CONTROLLED	YEAR INSTALLED	TYPE[1]	EFFICIENCY
PARTICULATE				
SULFUR DIOXIDE				
OXIDES OF NITROGEN				
HYDROCARBONS				
CARBON MONOXIDE				
GASEOUS FLUORIDES				

[1]PLEASE USE THE ABBREVIATIONS SHOWN ON THE BACK OF APC-20 FOR INDICATING TYPE OF CONTROL EQUIPMENT

IF THIS EMISSION POINT HAS SEVERAL PIECES OF CONTROL EQUIPMENT, INDICATE THE SEQUENCE, AS FOR EXAMPLE:

008/010: 80%/98%

TDBH-APC
B-220

14. IS AN EMISSION MONITORING AND RECORDING INSTRUMENT ATTACHED TO THIS EMISSION POINT? YES ☐ NO ☐

IF YES, DESCRIBE: _____

_____

15. DITIONAL COMMENTS: _____

_____

_____

EMISSION POINT DATA

16. SHOW AIR CONTAMINANT DATA FOR THIS EMISSION POINT:

POLLUTANT	ABSENT	PRESENT	CONCENTRATION		AVERAGE EMISSIONS		METHOD OF[2] MEASUREMENT
			QUANTITY	UNITS	LBS/HR.	TONS/YEAR	
PARTICULATES				GRAINS/SCF AT 70° F			
SULFUR DIOXIDE				PPM			
OXIDES OF NITROGEN				PPM			
HYDROCARBONS				PPM			
CARBON MONOXIDE				PPM			
GASEOUS FLUORIDES							
OTHERS							

[2]PLEASE USE THE ABBREVIATIONS SHOWN BELOW FOR INDICATING METHOD OF MEASUREMENT

METHOD OF MEASUREMENT

1. EMISSION TEST CONDUCTED AND RESULTS EVALUATED BY STATE (OR EPA).
2. EMISSION TEST OBSERVED BY STATE (OR EPA) COPY OF TEST REPORT ENCLOSED.
3. EMISSION TEST OBSERVED AND RESULTS ALREADY EVALUATED BY STATE (OR EPA) COPY OF TEST REPORT EVALUATION ENCLOSED.
4. EMISSION TEST UNOBSERVED. COPY OF TEST REPORT ENCLOSED ___ PREVIOUSLY SUBMITTED ___.
5. EMISSION TEST UNOBSERVED AND COPY OF TEST REPORT NOT ENCLOSED.
6. PROCESS MATERIAL BALANCE STUDY. COPY ENCLOSED ___ NOT ENCLOSED ___.
7. EMISSION FACTORS COPY OF FACTORS ENCLOSED OR CITED ___ NOT ENCLOSED ___.
8. OTHER BASIS - SPECIFY _____.

TDPH-APC
B-220

INSTRUCTION SHEET FOR APC-24

The following instructions are designed to aid industry and government agencies in filling out the APC-24 form. The numbers below refer respectively to the questions asked on the form APC-24.

1. No explanation needed.

2. Stack Number should start at stack number 1 and continue and include all fuel burning stacks in the boiler house or plant. A separate form shall be supplied for each stack.

3. Each boiler connected to this stack shall be listed separately. Show identifying number or other identification used for the boiler. Show type of firing-hand, underfeed stoker, spreader stoker, chain grate stoker, pulverized fuel-dry bottom, pulverized fuel-wet bottom-for coal firing. Show oil burner, gas burner or combination oil-gas burner. Show rated capacity in millions of BTU input to the burner. If there is no stoker or burner rating, give the size of the boiler. This can be in pounds of steam per hour produced by boiler, the square feet of heating surface, the horsepower rating or the boiler manufacturer together with the model number. Give type of fuel - gas, oil, coal, wood, propane, butane, etc. Also give annual quantity, MCF, gallons, tons, etc. Give units of the quantity given.

   If oil or coal, give sulfur content of fuel. If coal or wood, give ash content. If this information is not available, give the name and address of fuel supplier.

4. No explanation needed.

5. Attached sheet shows type of control equipment and corresponding numbers.

6. No explanation needed.

7-14. Where data submitted is based upon approximations or estimates rather than measurements, the figures should be so designated. Where such estimates seem unreasonable, clarification or verification may be required.

15-16. No explanation needed.

17. Indicate which contaminants are present and give the quantity in the units shown. Fill the remaining columns and show the basis of the figures given.

   Where stack sampling has been done exact concentrations of particulates, sulfur oxides and oxides of nitrogen should be given. Otherwise, emission factors may be used in calculating quantities of particulates and gaseous emissions.

SOURCE EMISSION DATA — NON-PROCESS - FUEL BURNING — APC - 24

IL TO: TENNESSEE DEPARTMENT OF PUBLIC HEALTH
DIVISION OF AIR POLLUTION CONTROL
256 CAPITOL HILL BUILDING
NASHVILLE, TENNESSEE 37219

LL OUT A SEPARATE SHEET FOR EACH STACK OR EMISSION POINT. SUBMIT TWO COPIES OF THIS RM AND TWO COPIES OF PERMIT APPLICATION, APC-20.

DO NOT WRITE IN THIS SPACE
COMPANY NO. ___ - _____
PERMIT NO. _____
EMISSION POINT NO. ___
REVIEWER ___
DATE _____

1. COMPANY NAME _____ 2. STACK NUMBER _____

GIVE BOILER DATA BELOW. USE A SEPARATE LINE FOR EACH BOILER DISCHARGING FLUE GAS TO THIS STACK.

BOILER NO.	TYPE FIRING*	RATED CAPACITY 10^6 BTU/HR	TYPE FUEL	ANNUAL QUANTITY	MAXIMUM HOURLY DESIGN RATE	UNITS	SULFUR[1] CONTENT (PERCENT)	ASH[1] % IF COAL	BTU VALUE OF FUEL

* CYCLONE SPREADER (WITH OR WITHOUT REINJECTION), PULVERIZED (WET OR DRY BOTTOM, WITH OR WITHOUT REINJECTION OTHER STOKER, SPECIFY TYPE, HAND FIRED, OR OTHER TYPE (DESCRIBE).

1 IF NOT AVAILABLE, GIVE NAME AND ADDRESS OF YOUR FUEL SUPPLIER.

4. IF A STANDBY OR INTERRUPTIBLE FUEL IS USED, GIVE TYPE OF FUEL, ANNUAL QUANTITY USED, AND THE SCHEDULE OR PROGRAM FOR USE

_____

_____

SULFUR CONTENT OF STANDBY FUEL _____ % IF COAL, SHOW ASH CONTENT _____ %

5. AIR POLLUTION CONTROL EQUIPMENT

AIR CONTAMINANT CONTROLLED	YEAR INSTALLED	TYPE[2]	EFFICIENCY
PARTICULATE			
SULFUR DIOXIDE			
OXIDES OF NITROGEN			
HYDROCARBONS			
CARBON MONOXIDE			

2 USE ABBREVIATIONS AS SHOWN ON BACK OF APC-20.

DID CONSTRUCTION OF THIS PROCESS BEGIN ON OR BEFORE AUGUST 9, 1969? YES ☐ NO ☐
ON OR BEFORE APRIL 3, 1972? YES ☐ NO ☐

TDPH-APC
B-222

6. IS AN EMISSION MONITORING AND RECORDING INSTRUMENT ATTACHED TO THIS STACK OR EMISSION POINT?

YES ☐ NO ☐ SMOKE DETECTOR? YES ☐ NO ☐ SO_2 MONITOR? YES ☐ NO ☐

NO_X MONITOR? YES ☐ NO ☐ OTHER (DESCRIBE) _____

_____

7. INDICATE STACK HEIGHT ABOVE GRADE _____ FT. 8. INSIDE DIAMETER OF STACK AT TOP _____ FT.

9. NORMAL DESIGN EXIT GAS TEMP. _____ °F. 10. EXIT DESIGN GAS VELOCITY _____ FPS.

11. EXIT DESIGN GAS VOLUME _____ CFM @ 70° AND 1 ATMOS.

12. SHOW MOISTURE CONTENT _____ (GRAINS/CU. FT. DRY GAS AT 70°F) AND _____ (GRAINS/CU. FT. GAS AT STACK CONDITIONS)

13. SHOW DISTANCE FROM RELEASE POINT TO NEAREST PROPERTY LINE _____ FT.

14. PERCENT OF HEAT USED FOR SPACE HEATING _____ %.

15. OPERATIONAL SCHEDULE OF NON PROCESS EMISSION SOURCE:

A. HOURS PER DAY _____

B. DAYS PER WEEK _____

C. WEEKS PER YEAR _____

D. INDICATE IF OPERATION VARIES BY SEASON AND TELL HOW (ATTACH ADDITIONAL SHEET IF NECESSARY)

_____

_____

_____

_____

_____

16. % ANNUAL FUEL BURNED IN EACH PERIOD BELOW

DEC - FEB	MARCH - MAY	JUNE - AUGUST	SEPT- NOV

17. SHOW AIR CONTAMINANT DATA FOR THIS EMISSION POINT:

POLLUTANT	ABSENT	PRESENT	CONCENTRATION			AVERAGE EMISSIONS		BASIS OF ESTIMATE (SPECIFY) *
			QUANTITY	UNITS	%EXCESS AIR	LBS/HR	TONS/YR	
PARTICULATES				GR/SCF				
SULFUR DIOXIDE				PPM				
OXIDES OF NITROGEN				PPM				
HYDROCARBONS				PPM				
CARBON MONOXIDE				PPM				
SHOW OTHERS:								

*PLEASE ATTACH A COPY OF THE TEST PROCEDURE, PROCESS MATERIAL BALANCE STUDY OR OTHER BASIS USED AS METHOD OF MEASUREMENT.

FOR OFFICE USE ONLY

☐ NEW FUEL BURNING INSTALLATION FILING IS AUTHORIZED BY _____ DATE _____

☐ EMISSION POINT IS NOT IN COMPLIANCE WITH PARTICULATE EMISSION STANDARD AND ALLOWABLE EMISSIONS OF _____ #/HR.

☐ EMISSION POINT IS NOT IN COMPLIANCE WITH SULFUR DIOXIDE STANDARD OF 620 PPM CORRECTED TO 15% EXCESS AIR

☐ EMISSION POINT IS NOT IN COMPLIANCE WITH GASEOUS EMISSION STANDARD. INDENTIFY GAS _____

☐ CONTINUOUS MONITOR (S) FOR (1) _____; (2) _____; (3) _____ RECOMMENDED.

☐ METHOD OF MEASUREMENT IS ACCEPTABLE ☐ METHOD OF MEASUREMENT IS NOT ACCEPTABLE

EXPLAIN _____

ALLOWABLE EMISSIONS - (TONS/YEAR) PARTICULATES _____ SULFUR DIOXIDE _____ HYDROCARBONS _____

CARBON MONOXIDE _____ OXIDES OF NITROGEN _____

ATTACHMENT AII

NATIONAL POLLUTANT DISCHARGE ELIMINATION SYSTEM

APPLICATION FOR PERMIT TO DISCHARGE WASTEWATER

FORM APPROVED
OMB No. 158–R0100

NATIONAL POLLUTANT DISCHARGE ELIMINATION SYSTEM (NPDES)

Application for Permit to Discharge Wastewater

Supplementary Instructions for STANDARD FORM C – MANUFACTURING AND COMMERCIAL

STANDARD FORM C – MANUFACTURING AND COMMERCIAL SUPPLEMENTARY INSTRUCTIONS

TABLE OF CONTENTS

	Page
General Instructions	1
Instructions for Individual Items	3
Section I. Applicant and Facility Description: Municipal	3
Section II. Basic Discharge Description: Manufacturing and Commercial	5
Section III. Waste Abatement Requirements and Implementation (Construction) Schedule: Manufacturing and Commercial	9
Appendix A – Standard Analytical Methods (Interim)	13

NATIONAL POLLUTANT DISCHARGE ELIMINATION SYSTEM
APPLICATION FOR PERMIT TO DISCHARGE
GENERAL INSTRUCTIONS
STANDARD FORMS

The Federal Water Pollution Control Act, as amended by Public Law 92-500 enacted October 18, 1972, prohibits any person from discharging pollutants into a waterway from a point source unless his discharge is authorized by a permit issued either by the U.S. Environmental Protection Agency or by an approved State agency. Regulations for the operation of this program are published in the FEDERAL REGISTER as 40 CFR part 125 (38 F.R. 13528, May 22, 1973), available from the Government Printing Office, Washington, D.C. 20402. Applicants wishing detailed information regarding this form or the permit should refer to this publication. It is expected, however, that for most applicants, the attached cover letter and the general instructions below will provide the information necessary to complete the form.

Who must apply.—The owner and operator of any activity or wastewater system, publicly or privately owned, which discharges wastes from one or more point sources into a waterway, must obtain a permit for such discharge(s). Where the system is owned by one person but leased to another person for operation, it is the responsibility of the operator to obtain the permit. A separate application is to be submitted for each facility discharging separately which is owned and/or operated by the applicant. Federal departments, agencies, and instrumentalities are also subject to these requirements. Discharges into publicly owned treatment works are not subject to permit requirements. However, discharges to publicly owned collection systems not connected to a treatment works are subject to these requirements. For a municipality, a facility is defined as a distinct activity or installation, including connected wastewater transport systems, which operates under the control or jurisdiction of a single responsible organization and discharges pollutants from one or more discharge points.

Application form to be used.—There are two sets of National Pollutant Discharge Elimination System (NPDES) Forms which are to be used, short forms (A-D) and standard forms (A and C). These instructions are for the standard forms A and C. The standard form requires specific information on the activity or wastewater facility and on each discharge. Depending on the adequacy of the data submitted for determining the issuance of a permit, additional information and analyses may be required from an applicant. Standard forms are designed for different sources of discharge as follows:

Form A—Municipal Wastewater Systems.

Form C—Manufacturing and Commercial (including mining and vessel discharges).

If the discharge is from a Federal facility's treatment plant receiving more than 50 percent domestic waste (based on the dry weather flow rate), complete standard form A. All other dischargers (including dischargers of domestic waste), with the exception of municipalities, municipal-type activities (e.g., subdivisions, shopping centers, etc.) and Federal facilities described above, must complete standard form C.

Signature on application.—The person who signs the application form will often be the applicant himself; when another person signs on behalf of the applicant, his title or relationship to the applicant should be shown in the space provided. In all cases the person signing the form should be authorized to do so by the applicant. An application submitted by a corporation must be signed by a principal executive officer of at least the level of vice president or his duly authorized representative, if such representative is responsible for the overall operation of the facility from which the discharge(s) described in the form originate. In the case of a partnership or a sole proprietorship, the application must be signed by a general partner or the proprietor, respectively. In the case of a municipal, State, Federal, or other public facility, the application must be signed by either a principal executive officer, ranking elected official or other duly authorized employee.

Attachments and supplemental information.—Some items in this form may require narrative explanation; for this purpose, use the item labeled "Additional Information" at the end of sections I and II, or attach a separate sheet entitled "Additional Information." Where a separate sheet is used, be sure it is identified by the name of the applicant, the activity, and the discharge number to which it applies. Also, identify each separate remark by the item number and section of the form to which it refers.

Drawings required in section I should be attached to this application and identified by the name of the applicant and the activity. All other papers and attachments to the application must be similarly identified.

Use of information.—Except as specified below, all information contained in this application will, upon request, be made available to the public for inspection and copying. A separate sheet entitled "Confidential Answers" must be used to set out information which the applicant believes if disclosed to the general public would divulge methods and processes entitled to protection as trade secrets. The information must clearly indicate the item number to which it applies. Confidential treatment can be considered only for the information for which a specific written request for confidential treatment has been made on the attached sheet. However, in no event will identification of the contents, volume, and frequency of a discharge be recognized as confidential or privileged information.

Completion of forms.—Unless otherwise specified in the detailed instructions, each item in the forms must be answered. To indicate that each item has been considered, enter "NA," for not applicable, where a particular item does not fit the circumstances or characteristics of your operation or activity.

Assistance and advice regarding requirements for filing permit applications can be obtained through contact with your EPA Regional Office or approved State agency.

Addresses of EPA Regional Offices and States Within Their Jurisdiction

Region	Address and Phone	State
I	Regional Administrator, Region I, Environmental Protection Agency, John F. Kennedy Federal Bldg., room 2303, Boston, Mass. 02203; attention: Permits Branch. 617-223-7210.	Connecticut, Maine, Massachusetts, New Hampshire, Rhode Island, Vermont.
II	Regional Administrator, Region II, Environmental Protection Agency, 26 Federal Plaza, room 908, New York, N.Y. 10007; attention: Permits Branch. 212-264-9895.	New Jersey, New York, Virgin Islands, Puerto Rico.
III	Regional Administrator, Region III, Environmental Protection Agency, Curtis Bldg., Sixth and Walnut Sts., Philadelphia, Pa. 19106; attention: Permits Branch. 215-597-9966.	Delaware, District of Columbia, Maryland, Pennsylvania, Virginia, West Virginia.
IV	Regional Administrator, Region IV, Environmental Protection Agency, 1421 Peachtree St. NE., Atlanta, Ga. 30309; attention: Permits Branch. 404-526-3971.	Alabama, Florida, Georgia, Kentucky, Mississippi, North Carolina, South Carolina, Tennessee.
V	Regional Administrator, Region V, Environmental Protection Agency, 1 North Wacker Dr., Chicago, Ill. 60606; attention: Permits Branch. 312-353-1472.	Illinois, Indiana, Michigan, Minnesota, Ohio, Wisconsin.
VI	Regional Administrator, Region VI, Environmental Protection Agency, 1600 Patterson St., suite 1100, Dallas, Tex. 75201; attention: Permits Branch. 214-749-1983.	Arkansas, Louisiana, New Mexico, Oklahoma, Texas.
VII	Regional Administrator, Region VII, Environmental Protection Agency, 1735 Baltimore Ave., Kansas City, Mo. 64108; attention: Permits Branch. 816-374-5955.	Iowa, Kansas, Missouri, Nebraska.
VIII	Regional Administrator, Region VIII, Environmental Protection Agency, 1860 Lincoln St., suite 900, Denver, Colo. 80203; attention: Permits Branch. 303-837-4901.	Colorado, Montana, North Dakota, South Dakota, Utah, Wyoming.
IX	Regional Administrator, Region IX, Environmental Protection Agency, 100 California St., San Francisco, Calif. 94111; attention: Permits Branch. 415-556-3450.	Arizona, California, Hawaii, Nevada, Guam, American Samoa, Trust Territories.
X	Regional Administrator, Region X, Environmental Protection Agency, 1200 Sixth Ave., Seattle, Wash. 98101, attention: Permits Branch. 206-442-1213.	Alaska, Idaho, Oregon, Washington.

SECTION I. APPLICANT AND FACILITY DESCRIPTION: MANUFACTURING AND COMMERCIAL

1. *Legal name of applicant.*—This term applies to the person, agency, firm, municipality, or any other entity which owns or is responsible for any waste treatment works, interceptor system or any facility/activity conducting operations that result or may result in a discharge of pollutants to a navigable water. This may or may not be the same name as the facility or activity producing the discharge. Enter the name of the applicant as it is officially or legally referred to, e.g., Wire Steel Corp., Johnson Photo Processing Co. Do not use colloquial names as a substitute for the official name.

2. *Mailing address of applicant.*—Use the complete mailing address of the applicant's main office. This often will not be the same address used to designate the location of the work or activity.

3. *Applicant's authorized agent.*—Give the name of a person who is thoroughly familiar with the facts reported on the forms and who can be contacted by the Environmental Protection Agency, State offices, and other agencies involved in permit application processing and review.

The person named, although not necessarily the same as the signing official, is also subject to the provisions of the law quoted below the signature line on the first page of the form.

Give the mailing address and telephone number where the agent can be reached.

5. *Discharge facility/activity.*—A facility is a distinct activity or installation, including connected transport systems, which operates under the control or jurisdiction of a single responsible organization and produces or may produce one or more sources of pollution. Name the facility/activity as it is officially or legally referred to in order to distinguish it from similar entities, if any, in the same geographical area. Do not use colloquial names as a substitute for the official name.

Items 7-9—An accounting of all water associated with this facility is required. Values for the major categories of water intake, use, and discharges and losses are to be specified. All remaining categories are to be entered as "other" with the type specified in the appropriate space. If there are numerous categories for "other," specify them with the appropriate item number in "Additional Information" (item 12). Solely storm water discharges need not be reported in item 7-9. However, if storm water is combined with other flows, it is to be included as part of the totals. For example, if storm water enters the collection system of the facility, is passed around the main facility processes and then combined with other flows before being discharged to a surface water, it should appear as "other" in items 7 and 8, and as part of "surface water" discharge in item 9.

7. *Facility intake water. (Mining activities may omit this item)*—The volume per day of intake water may be estimated from water supply meter readings or from billing statements from a water supply utility. If water is not metered, estimate from pump capacity (in gallons per minute) times 60 times average number of hours the pump operates per day, dividing the product by 1,000 to obtain thousands of gallons per day to the nearest thousand of gallons.

Municipal or private water systems.—Any publicly or privately owned system that is a source of water for domestic, commercial, industrial, and public services.

Surface water.—Water other than subterranean water (e.g., ocean, lakes, and streams).

Ground water.—All subsurface or subterranean water.

8. *Facility water use.*—Estimate the net volume per day used at the facility for each type of use listed. Do not count twice water which is reused.

Noncontact cooling water.—Water used to reduce temperature which does not come in contact with any raw material, intermediate, or end product.

Boiler feed water.—Water forced into a boiler to replace water that evaporated in the generation of stream.

Process water.—Water that comes in contact with any raw material, intermediate material, or end product.

Sanitary water.—Wastewater discharged from the sanitary conveniences (e.g., toilets, sinks, showers) of dwellings, office buildings, industrial plants, or institutions.

If water is first used for one purpose and the same water is subsequently used for one or more other purposes, indicate the volume per day of the last designated use before treatment and/or discharge.

For example, if water is initially used as noncontact cooling water and then as process water (before being treated and discharged) the quantity of water given should be indicated as process water.

The total of item 8 should equal the total of item 7. Any difference in these totals should be explained in item 12, "Additional Information."

9. *Facility discharges, number and facility discharge volume.*—The total volume per day of discharges or losses (e.g., evaporation and water consumed by process) should equal the total intake volume per day (item 7). Any difference in the sum of items 7 and 9 should be explained in item 12, "Additional Information." If discharge is directly to land, use category "Surface impoundment with no effluent," or "Underground Percolation," or if to a surface which drains into a waterway, "Surface Water." If discharge is intermittent and less than once per day, divide average gallons per discharge by average number of days between discharges.

Surface water.—All water on the surface, as distinguished from subterranean water.

Sanitary wastewater transport system.—Conveys through a system of pipes:

(1) Domestic wastewater with storm and runoff water excluded.

(2) Wastewater discharging from the sanitary conveniences of dwellings (including apartment houses and hotels), office buildings, industrial plants, or institutions.

(3) The water supply of a community after it has been

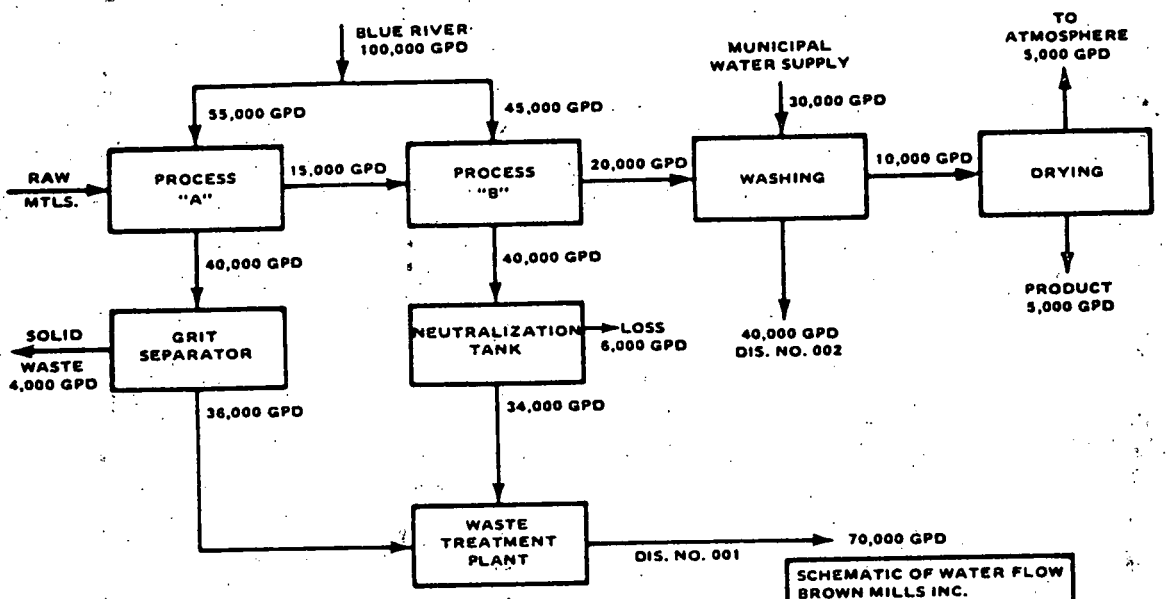

FIGURE A

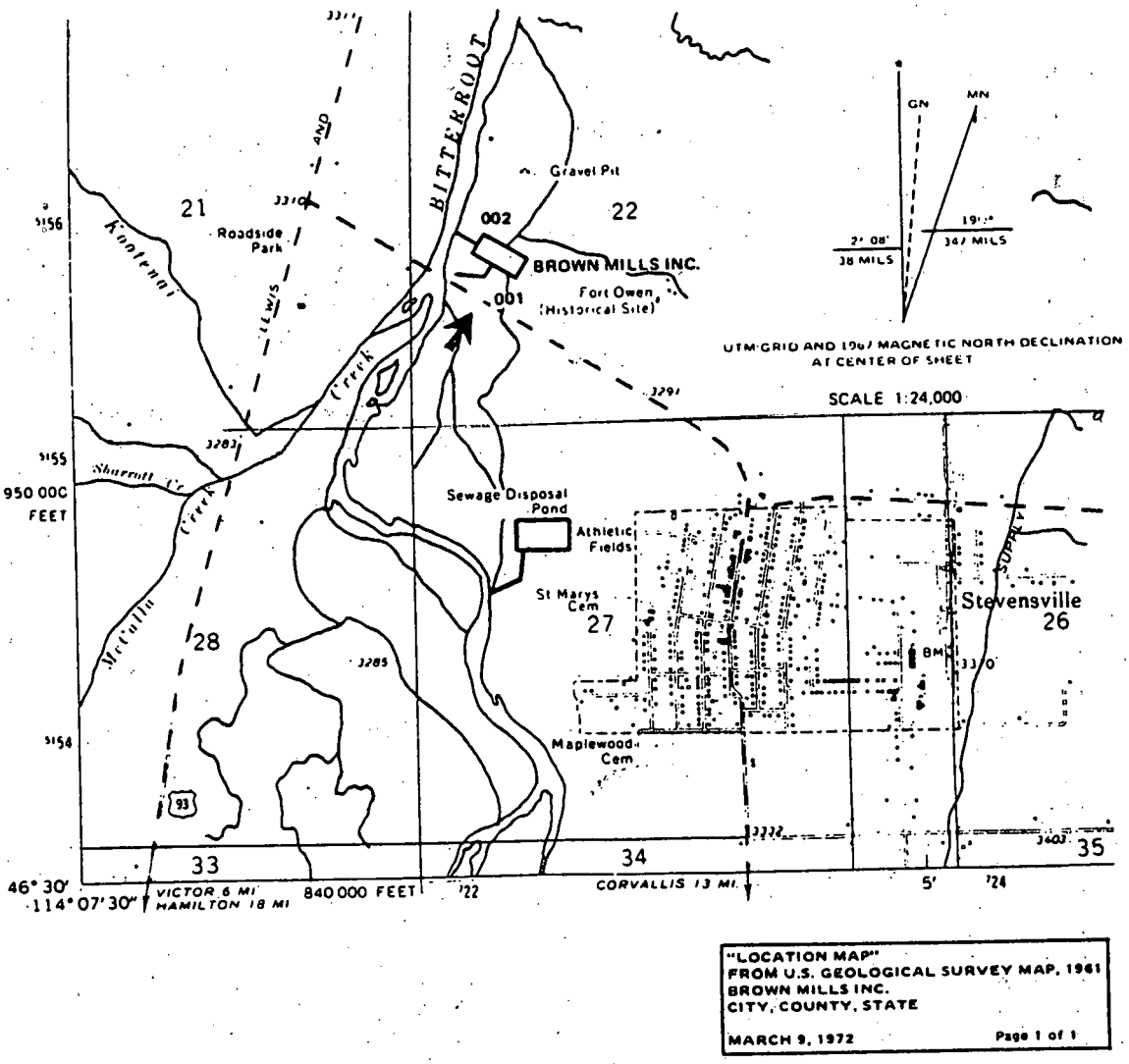

FIGURE B

used and discharged into a sewer.

Storm water transport system.—A separate collection system of pipes that convey runoffs from buildings and land caused by precipitation.

A system of drains and appurtenances for conveying the runoff from street surfaces caused by precipitation.

Combined sanitary and storm water transport system.—A system of pipes which carries a mixture of storm water runoff, surface water runoff, and other wastewater such as domestic or industrial wastewater.

Surface impoundment with no effluent.—A manmade holding pond or basin large enough to contain all wastes discharged which allows evaporation with no or an insignificant amount of percolation into the ground and has no overflow.

Underground percolation.—The movement or flow of water through the interstices or the pores of the soil or other porous medium.

Well injection.—This code is to be used for injection of wastes into a well.

Waste acceptance firm.—A company which collects stored wastes and conveys them to a central location for treatment or disposal.

Evaporation.—The volume of water that is being changed into vapor and lost to the atmosphere.

Consumption.—Water that is incorporated into the product or its byproduct during a production process.

10. *Permits, licenses, and applications.*—List all existing permits and licenses or permit and license applications granted by or requested from Federal, interstate, State, or local agencies associated with any discharge described in this application. Examples: A license to operate a powerplant issued by the Atomic Energy Commission or the Federal Power Commission; a permit to construct issued by the Army Corps of Engineers; a permit to discharge issued by a State water control office.

11. *Required maps and drawings.*—A "schematic of water flow" and a "location map" are required with this application. All maps and drawings should be either on paper or other material suitable for reproduction. If possible, all sheets should be approximately letter size with margins suitable for binding. As few sheets should be used as necessary to show clearly what is involved. All discharge points should be identified with the discharge serial numbers used in section II of this application. Titles are to be located in the lower right-hand corner. Titles must include applicant's name, facility location, date of drawing, and designation of number of sheets as "page ___ of ___."

(a) *Schematic of water flow.*—A line drawing of water flow through the facility producing the discharges must be attached to this application. Clearly indicate all intake points and sources. Average flow rates should be shown for various streams if possible. Specific plant processes are to be indicated by blocks of at least 1-inch square. The title is to be headed by the statement "Schematic of Water Flow." An example of the drawing required is shown in figure A.

(b) *Location map.*—A map showing the location of each discharge structure, including any and all outfall devices, dispersive devices, and nonstructural points of discharge, must be attached to this application. All maps must be drawn to scale and the scale shown. The usual meridian arrow showing north must be shown at the top of each sheet. The direction of river flow is to be indicated by a suitable arrow. Maps may be traced from a Coast Survey, Lake Survey, or Geological Survey chart, road map, or other general map and must bear a note showing the number and title of such map or chart (e.g., "Traced from U.S. Coast Survey Chart 273."). The name of the waterway and the names of the towns and prominent points are to be placed on this map and identified. The location of each existing and proposed discharge structure must be clearly identified using the discharge serial number specified in section II of this application. The title is to be headed by the statement "Location Map." An example of the location map is shown in figure B.

SECTION II—BASIC DISCHARGE DESCRIPTION: MANUFACTURING AND COMMERCIAL

1.a. *Discharge serial number.*—Assign a three-digit number beginning with 001 for the point of discharge covered by the first description. Discharge serial numbers must be consecutive for each additional discharge described; hence, the second serial number should be 002, the third 003, etc. Enter this number at the top of each page of section II in the space provided.

b. *Discharge point name.*—Give the name, if any, of the discharge point which distinguishes it from all other discharge points from the facility, e.g., Main Street Outfall; Mill Creek Pipe.

c. *Previous discharge serial number.*—If application for a National or Federal permit was made previously for this discharge (see item 4, section I), supply the serial number assigned for this discharge.

3. *Engineering report.*—An engineering report assembles basic information, presents design criteria and assumptions, examines alternate project with preliminary layouts and cost estimates and offers a conclusion with a proposed project for client consideration. This document provides a technical basis for detailed design and preparation of construction plans and specifications.

If an engineering report was prepared on the facility producing this discharge, check the box provided and list in item 26 all such reports and indicate where they are available for inspection by the reviewing office.

5. *Discharge point description.*—See instructions for section I, item 9 for definitions of terms.

7. *Name of waterway.*—Use the name of the waterway by which it is usually designated on published maps of the area; if possible, refer to one of the map series published by the U.S. Geological Survey. When the discharge is to an unnamed tributary, please so state and give the name of the first body of water fed by that tributary which is named on the map, e.g., unnamed ditch to Vaughan Creek; unnamed arroyo to Serpent River, where Serpent River is the first

body of water that is named on the map and is reached by the discharge.

9.a. *Type of discharge.*—A continuous discharge is one which occurs without interruption throughout the operating hours of the facility. An intermittent discharge is a discharge that occurs and ceases at regular or irregular intervals, either during or outside of the operating hours of the facility.

c. *Discharge occurrence.*—This item refers to a discharge occurring at intervals and lasting for periods of weeks or months. During this period, the discharge may be continuous or intermittent. Example of such a discharge is a cannery that operates only during the summer months.

13. *Description of activity.*—Provide a separate narrative description of each specific activity or process causing this discharge. Descriptions should be as concise as possible. Example: "Manufacture of sulfuric acid by contact process."

14. *SIC code.*—Report the standard industrial classification (SIC) code(s) which identifies the activity actually causing the discharge. These may differ from the SIC code describing the overall activity of the facility. For example, if an aircraft manufacturer (SIC 3721) is discharging wastes from an electroplating process (SIC 3471), SIC Code 3471 should be entered.

If discharge is from a separate cooling water and/or steam generation system, use SIC 4930.

Standard industrial classification (SIC) code numbers and descriptions may be found in the 1972 edition of the "Standard Industrial Classification Manual" prepared by the Executive Office of the President, Office of Management and Budget, which is available from the Government Printing Office, Washington, D.C. Do not use previous editions of the manual.

Copies are also available for reference at your State Water Pollution Control Office, Regional Offices of the Environmental Protection Agency, and at most public libraries.

Raw material/product produced.—For each SIC number listed, specify either the principal product or the principal raw material and the average quantity per day produced or consumed at heaviest product mix during a month of maximum production which is representative of the expected level of activity contributing to this discharge. Levels of production may be obtained from actual operating records or expected production levels based on market projections.

Figures are to be reported in the units of measurement given in table I for the particular SIC categories that are listed. Enter the letter-number code from the "Code" column in table I for the units selected in the appropriate "Units" box of item 14. Other SIC categories should use the units of measurement normally used by that industry.

For discharges which are composed solely of domestic waste, use SIC 4952 and report under 14a. Raw material. Under column labeled "Maximum amount/day" enter the estimated number of people contributing to this discharge.

Shared discharges.—If the wastewater from this process contributes to other discharges, indicate the other discharge points by their discharge serial numbers under the column labeled "Shared discharges." If none, enter "None." Separate each serial number by a comma. If part of the waste stream goes to a municipal treatment facility, indicate by entering "MUN" in place of the discharge serial number.

Example:

a. RAW MATERIALS

SIC Code	Name	Amount/ Day Maximum	Units (See Table I)	Shared Discharges (serial number)
2911	Crude Oil	10,000	S-1	004, 006

15. *Waste abatement practices.*—a. Provide in this space a brief narrative description of the waste abatement practices currently in use which affect this discharge. Describe those process changes in raw materials, recycling methods, wastewater treatment equipment, and other techniques employed that result in waste abatement for this discharge.

b. Describe the wastewater abatement procedures for this discharge using the alphabetic codes for abatement practices listed in table II. List the codes in the sequence in which the wastewater abatement procedures are applied for this discharge.

16. *Wastewater characteristics.*—Presence or absence of a wastewater constituent should be based on any previous analysis performed or based on knowledge of the constituents associated with the activities and/or processes causing this discharge (e.g., raw materials, catalysts, intermediates, etc.). For example, if zinc is used in a process from which there is a discharge, the box next to zinc should be checked unless it is known from actual analysis conducted previously that zinc is not present in the effluent. Constituents present solely in the intake water (i.e. not part of any process) for which no previous analysis has been performed do not require additional analyses to determine their presence in the effluent.

17. *Description of intake and discharge.*—For each of the parameters listed, enter in the appropriate box the value or code letter answer required. Values must be representative of the discharge during the previous 12 months of operation or represent best engineering estimates for proposed discharges. Detailed instructions for completing particular columns are provided below.

Each parameter has been assigned units as specified on the form. If you choose to use different units, follow the directions below:

(a) To report flow in million gallons per day (MGD) line out number 00056 and insert 50050 below the printed number.

(b) To report temperature in degrees centigrade, line out the printed numbers and insert 74026 below the printed numbers for winter and 74025 for summer.

Column 1. Untreated intake water.—Give the daily average value of the intake water at the point it enters the facility. If intake water for this discharge is from more than one source, and enters the facility at separate entry points,

supply the total average daily flow from all sources. Also, supply type and flow for each source in item 26. Daily average intake values for the remaining parameters should be the weighted average proportional to the quantity of flow contributed from each source.

If intake water is from a navigable water, its tributary, private well, or other source of ground water, the value for the incoming water before treatment must be entered. If intake water is from a different body of water than the receiving water, give the type (tributary, well, etc.) of this intake source in "Additional Information" (item 26). If water is treated prior to use, completion of column 1 is not required (see instructions for column 2). Values of intake water are not required for mining activities.

Column 2. In-plant treated intake water.—If all or part of intake water is treated before use, provide values for total intake here instead of in column 1. Also describe briefly in item 26 "Additional Information," the type of treatment performed on intake water (e.g., rapid sand filtration, coagulation, flocculation, ion exchange, etc.) and the percent of intake water contributing to this discharge that has been treated.

NOTE: The quantity of intake flow should only reflect the amount contributing to this discharge. If this is impossible to determine and the influent contributes to more than one discharge, specify in the space provided the serial number(s) (separated by commas) of discharge(s) to which this influent contributes.

Column 3. Daily average.—Supply daily average value for the days when discharge is actually operating or is expected to be operating (for a new discharge). Daily average values are to be computed by weighting the daily value in proportion to the daily flow. If a discharge occurs irregularly, the value supplied in the column marked "Daily Average" should represent an average for the days the discharge actually occurs. Average values are not to be supplied for pH, specific conductance, and bacteriological parameters (e.g., coliform bacteria).

Columns 4 and 5. Minimum values, maximum values.—Supply minimum and maximum values observed (or expected for new discharges) over any one day when the discharge is operating.

Column 6. Frequency of analysis.—Specify the average frequency of analysis for each parameter as number of analyses per number of days (e.g., "3/7" is equivalent to three analyses performed every 7 days). If continuous, enter "CONT." When analyses are conducted on more than one individual grab sample collected during the same day, the analysis frequency should reflect one analysis whose value is the average of the individual grab sample measurements. Average frequency should be based on an operating month.

Column 7. Number of analyses.—Specify the number of analyses performed during the previous 12 months of operation at the average frequency specified in column 6 up to 365.

Column 8. Sample type.—Specify sample type as follows:

G For grab sample (individual sample collected in less than 15 minutes).

For composite sample "#" is to be replaced by the average number of hours over which the composite sample was collected. Composite samples are combinations of individual samples obtained at intervals over a time period. Either the volume of each individual sample is directly proportional to discharge flow rates or the sampling interval (for constant-volume samples) is inversely proportional to the flow rates over the time period used to produce the composite.

NA If "CONT" was entered in column 6.

Analytical methods.—Appendix A contains all parameters with their reporting levels, test descriptions and references. The parameter values can be determined either by use of one of the standard analytical methods as described in table A or by methods previously approved by the EPA Regional Administrator or Director of a federally approved State program (or their authorized representatives) which has jurisdiction over the State in which the discharge occurs. If the test used is not one shown in table A, the test procedure should be referenced in item 26 or on a separate sheet. If values are determined to be less than the detectable limit (as determined by referenced standard analytical techniques and/or instrument manufacturer's literature), specify "LT (value of detectable limit)" in the appropriate space. For example, if the detectable limit is .005 mg/l and quantities of less than this are determined, specify "LT .005." Do not enter descriptors such as "NIL," "TRACE," "NEG ," etc., for this purpose. If it is your reasoned judgment that one or more of the required parameters is not present in the initial untreated or treated process water and/or the discharge, enter "A" (meaning "absent") in the appropriate space.

In order for values reported to be representative, it is recommended that they be based on at least five to seven analyses of daily composite samples (if applicable). Samples should be taken during period of maximum production, if possible. If samples are taken at period of less than maximum production, state in item 26 (except for mining activities) the percent of maximum production that was obtained during the sampling period.

19. *Water treatment. d. chemical composition.*—The chemical composition may be taken from the manufacturer's label or literature. If this is done, so state. If not available, specify "NOT AVAILABLE."

20. *Thermal discharge source.*—If several of the sources listed are present in an installation and result in discharges from more than one point, a separate copy of section II must be completed for each discharge point. If several discharge sources are combined to result in a discharge from one point, only one copy of section II need be completed.

21. *Discharge/receiving water temperature difference.*—Value should represent temperature difference between discharge point and ambient temperature of receiving water.

22. *Discharge temperature, rate of change per hour.*—If the temperature of this discharge is subject to abrupt change, give the maximum rate at which change occurs.

Compute the change rate by dividing the discharge temperature change by the time, in hours, over which the change occurs. For example, if the discharge temperature drops from 80° to 70° F over a 5-hour period, the rate is

$$\frac{80° \text{ F} - 70° \text{ F}}{5 \text{ hours}} = 2° \text{ F/hour.}$$

23. *Water temperature, percentile report.*—Values given should represent temperatures at point of intake and point of discharge.

24. *Water intake velocity.*—The intake velocity is defined as the critical or highest approach velocity measured at any point prior to intake screening. (This includes any point prior to the trash racks, log screens, etc.)

25. *Retention time.*—This item pertains primarily to cooling water discharges. Give the average length of time during which the temperature rise occurs prior to discharge. If the discharge temperature is significantly less than the maximum temperature of the water, a diagram indicating time-temperature relationships during the retention time should be supplied. For example, if under average conditions the condenser rise is 22° F and the cooling water passes through a canal and is finally discharged at 14° rise, a diagram of the following type should be provided:

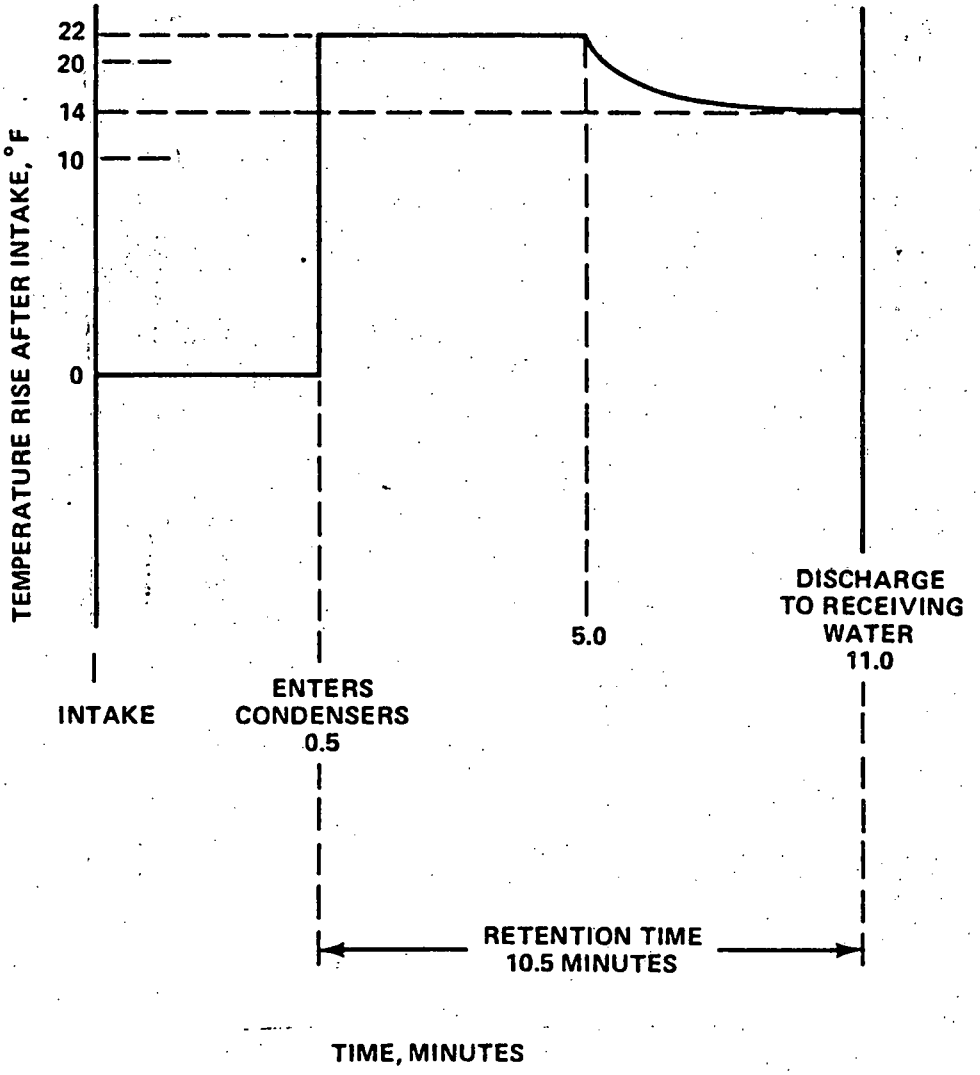

SECTION III–WASTE ABATEMENT REQUIREMENTS AND IMPLEMENTATION (CONSTRUCTION) SCHEDULE: MANUFACTURING AND COMMERCIAL

1.b. *Improvements–authority imposing requirements.*–

Locally developed plan.–A schedule developed at the county or municipal or Federal facility level.

Areawide plan.–A schedule developed by a metropolitan authority or other agency formed by local or municipal governments, e.g., Greater Washington area.

Basin plan.–A schedule developed by a river basin commission, or other body having authority over a watershed area, e.g., Delaware River Basin, Potomac River Basin.

State approved implementation schedule.–A schedule imposed to achieve compliance with water quality standards approved by the Environmental Protection Agency or by its predecessors, the Federal Water Quality Administration and the Federal Water Pollution Control Administration.

State approved implementation schedule.–A plan imposed to achieve compliance with State water quality standards for intrastate waters or by a permit or equivalent document issued by a State water pollution control agency.

Federal approved water quality standards implementation plan.–A schedule imposed to achieve compliance with water quality standards approved by the Environmental Protection Agency or by its predecessors, the Federal Water Quality Administration, and the Federal Water Pollution Control Administration.

Federal enforcement procedure or action.–A schedule imposed by an enforcement conference held under section 10(a) of the Federal Water Pollution Control Act prior to the date of enactment of the FWPCA amendments of 1972.

State court order.–A schedule imposed in an order or settlement issued or approved by a State court of law.

Federal court order.–A schedule imposed in an order or settlement issued or approved by a court of the United States.

2. *Implementation schedule.*–Supply the following dates as they are applicable to the implementation schedule (plan) being described:

a. *Preliminary plan approval.*–The date the preliminary engineering plans are to be submitted.

b. *Final plan submission.*–The date the final engineering plans are to be submitted.

c. *Final plan approval.*–The date the final engineering plans are to be approved.

d. *Financing complete.*–The date all financing arrangements are to be completed.

e. *Site acquired.*–The date the land to be used for the treatment works is to be acquired.

f. *Begin action (e.g., construction).*–The date the action to be implemented is scheduled to begin.

g. *End action (e.g., end construction).*–The date the action to be implemented is scheduled to be completed.

h. *Begin discharge.*–The date the discharge is scheduled to start operating after the action has been completed.

i. *Operational level attained.*–The date the effluent level is scheduled to meet the conditions imposed by the implementation plan.

3. *Actual completion.*–Supply actual completion dates for those steps of the implementation schedule which have been completed.

Table I – Units of Measurement by SIC Code (Industry)
(To Be Used for Item 14, Section II)

SIC Code(s)	Code	Units of measurement	Industry
201; 2077	A-1	Pound live weight killed (meatpacking in slaughterhouse or packinghouse; poultry processing).	Meat products.
	A-2	Pound product (slaughtering & rendering; processing).	
	A-3	Pound raw material (rendering in offsite plant).	
202; 5143	B-1	1,000 lb milk equivalent	Dairy products.
2033; 2034; 2037; 2038.	C-1	Ton raw material	Canned and preserved fruits and vegetables.
204	D-1	1,000 bu processed	Grain mill products.
2061	E-1	Ton sugar cane processed	Raw cane sugar.
2062	E-2	Ton raw sugar processed	Cane sugar refining.
2063	E-3	Ton beets sliced	Beet sugar.
2077		See SIC 201	
2084	F-1	Ton grapes pressed	Wines, brandy, and brandy spirits.
	F-2	1,000 gal wine (table wine, for process season only).	
2085	F-3	1,000 bu grain processed	Distilled liquor, except brandy.
2086	F-4	1,000 standard cases	Bottled and canned soft drinks.
2091; 2092	G-1	Ton raw material	Seafoods.
22	H-1	1,000 lb raw material	Textile mill products.
	H-2	*or* 1,000 lb product	
2421	I-1	1,000 fbm	Sawmills and planing mills.
2435; 2436	I-2	1,000 ft^2 on three-eighths inch basis	Veneer and plywood.
2491	I-3	1,000 ft^3 treated	Wood preserving.
2492	I-4	1,000 ft^2 on a three-fourths inch basis	Particle board.
26	J-1	Ton product	Paper and allied products.
2812; 2816; 2819	K-1	Ton product	Inorganic chemicals.
2821; 2823; 2824; 2891; 3079.	L-1	1,000 lb product	Plastic materials and synthetics industry.
2822	M-1	1,000 lb rubber produced	Synthetic rubber (vulcanizable elastomers).
283	N-1	1,000 lb raw material	Drugs and pharmaceuticals.
2841	O-1	1,000 lb product	Soap and detergents.
	O-2	*or* 1,000 gal product	
2865; 2869	P-1	1,000 lb product	Organic chemicals.
2873; 2874; 2875	Q-1	1,000 ton product	Fertilizer industry.
2879	R-1	1,000 lb product	Agricultural chemicals and pesticides.
2891		See SIC 2821	
2911	S-1	1,000 bbl crude or partially refined feed stock (stream day).	Petroleum refining.
3011; 3021; 3031; 3041; 3069.	T-1	1,000 lb raw material	Rubber products.
3111	U-1	1,000 lb green salted hides or pickled skins.	Leather tanning and finishing.
3211; 3231	V-1	1,000 ton product	Flat glass and glass products made from purchased glass.
	V-2	*or* 1,000 ft^2 mirrored surface (for mirrored glass only).	
3241	V-3	1,000 bbl product	Hydraulic cement.
327	V-4	1,000 ton product	Concrete, gypsum, and plaster products.

Table I – Units of Measurement by SIC Code (Industry)
(To Be Used for Item 14, Section II)
(Continued)

SIC Code(s)	Code	Units of measurement	Industry
3292	V-5	1,000 ton asbestos used	Asbestos products.
331	W-1	Ton dry coal	Coke making.
	W-2	Ton hot metal	Blast furnaces.
	W-3	Ton liquid steel	Steelworks.
	W-4	Ton hot formed steel	Hot forming.
	W-5	Ton processed steel	Rolling and finishing mills.
332	W-6	Ton metal cast	Iron and steel foundries.
333	X-1	1,000 lb metal product	Primary smelting and refining of nonferrous metals.
334	X-2	1,000 lb metal product	Secondary smelting and refining of nonferrous metals.
335	X-3	1,000 lb metal processed	Rolling, drawing, and extruding of nonferrous metals.
336	X-4	1,000 lb metal cast	Nonferrous foundries.
3465, 3711; 3714	Y-1	Unit production	Automobile manufacturing.
	Y-2	*or* square feet	
4911; 4931	Z-1	1,000 MWd generated	Electric power services.
4961	Z-2	1 million lb steam produced	Steam supply.

Table II–Waste Treatment Process Codes

1. IN-PLANT CONTROL MEASURES

E Series–Engineering Design Considerations

ESEPAR–Installation of separate drainage systems.
ESEGRE–Segregation and collection of specific wastes.
ESURFA–Use of surface condensers in place of barometric condensers.
EMERGE–Emergency storage facilities.
ECOUNT–Countercurrent use of chemicals and/or wash waters.
EPUMPS–Use of pumps and valves with special seals to minimize leakage.
EOTHER–Other.

D Series–Process Design Modifications

DREACT–Use of reaction chemicals or feed stocks producing minimum waste.
DCHEMI–Chemical regeneration.
DDOWNG–Downgraded use of chemicals.
DELIMI–Elimination of air blowing and water washing.
DHYSIC–Physical separators.
DCHANG–Change in design basis for chemical recovery facilities.
DSTOPD–Elimination of discharge.
DOTHER–Other.

R Series–Recovery & Utilization

RECOVE–Recovery of material for reuse in process.
RDOWNG–Downgraded use of spent chemicals in other processes.
RUSEOR–Use or sale of wastes as raw material for other processes.
RECYCL–Recycle or reuse of water.
RHEATR–Heat recovery.
REVAPO–Multieffect evaporators.
ROTHER–Other.

L Series–Local Pretreatment or Disposal

LOCALS–Local separators and traps.
LEVAPO–Evaporation and incineration of noxious liquid wastes.
LUSEOF–Use of emulsion prevention chemicals.
LOTHER–Other.

O Series–Operation Control

OMONIT–Monitoring sewer effluents.
OOTHER–Other.

2. WASTEWATER TREATMENT UNIT OPERATIONS

P Series–Physical Treatment

PEQUAL–Equalization.
PSCREE–Screening.
PAERAT–Preaeration.
PSEDIM–Sedimentation.
PFLOAT–Flotation.
PTEMPE–Temperature control.
PSKIMC–Skimming and clarification.
PSEPAR–Separation (API separator).
PAIRSG–Air stripping.
PSTRIP–Steam stripping.
PSANDF–Sand filtration.
PDIATO–Diatomite filtration.
PMIXED–Mixed media filtration.
POTHER–Other.

C Series–Chemical Treatment

CNEUTR–Neutralization.
CCOAGU–Chemical coagulation.
CPHADJ–pH adjustment (other than neutralization).
CODORC–Odor control.
CNUTRI–Nutrient addition.
CFLOCC–Flocculation.
CMTDRO–Chemical hydrolysis (use NaOH to hydrolize to urea to NH_3 then apply steam stripping).
CCLDIS–Chlorine disinfection.
CODISN–Other disinfection.
COTHER–Other.

B Series–Biological Treatment

BSTABI–Stabilization pond (facultative).
BACTIV–Activated sludge (all modifications).
BTRICK–Trickling filter.
BAERAT–Aerated lagoon.
BANERO–Anaerobic contact.
BAPOND–Anaerobic pond.
BDENIT–Denitrification.
BNUTRI–Biological nitrification.
BPOLIS–Polishing lagoon.
BROTAT–Rotating biological contactor.
BHYDRO–Biological hydrolysis (urea to NH_3).
BOTHER–Other.

S Series–Sludge Handling

STHICK–Thickening.
SLAGOO–Lagooning or drying bed.

Table II–Waste Treatment Process Codes (Continued)

SCENTR–Centrifugation.
SVACUM–Vacuum filtration.
SDRYCO–Dry combustion.
SWETCO–Wet combustion.
SLANDD–Land disposal.
SEADIS–Sea disposal.
SANAER–Anaerobic digestion.
SAEROB–Aerobic digestion.
SPRESS–Filter press.
SOTHER–Other.

3. ADVANCED WASTE TREATMENT

T Series–Temperature Change Process

TEVAPO–Evaporation.
TFREEZ–Freezing.
TDISTI–Distillation.
TEUTEC–Eutectic freezing.
TWETOX–Wet oxidation.
TPROCE–Process residue, handling and disposal.
TOTHER–Other.

M Series–Miscellaneous

MADSOR–Adsorption.
MELECT–Electrodialysis.
MIONOX–Ion exchange.
MSOLVE–Solvent extraction.
MREVER–Reverse osmosis.
MFOAMI–Foaming.
MTREAT–Electrochemical treatment.
MPOSTA–Post aeration.
MUNDIS–Discharge to municipal waste treatment facility.
MOTHER–Other.

4. NO WASTE ABATEMENT PRACTICE

NONONE–None.

APPENDIX A – STANDARD ANALYTICAL METHODS (INTERIM)

(To be Used with Item 17, Section II, and the "Additional Required Information" Form)

The following tables are to be used as a guide in reporting the data concerning each parameter. The first column of each table, "PARAMETER & UNITS," indicates the preferred units for reporting data for a given parameter. The second column, "METHOD," lists the preferred analytical method (if any) for determining the required parameter values. The next three columns, "REFERENCES," give the page numbers in standard reference works where a detailed description of the recommended analytical technique given under "METHOD" can be found. These standard references are:

1. Standard Methods for the Examination of Water and Wastewaters, 13th Edition, 1971, American Public Health Association, New York, N.Y. 10019.
2. A.S.T.M. Standards, Part 23, Water; Atmospheric Analysis, 1972 American Society for Testing and Materials, Philadelphia, Pa. 19103.
3. EPA Methods for Chemical Analysis of Water and Wastes, April 1971, Environmental Protection Agency, Water Quality Office, Analytical Quality Control Laboratory, NERC, Cincinnati, Ohio 45268.

Copies of the publications are available from the above sources, or for review in the Regional Offices of the Environmental Protection Agency or the State Water Control Board.

Data must be reported with an accuracy of *at least* two significant digits, i.e., values less than 1 must be reported *at least* to the nearest .01, values between 1 and 10 to the nearest 0.1, values between 10 and 100 to the nearest 1.0, and so forth.

TABLE A

Chemical Parameters				
Parameter & Units	Method	References		
		Standard Methods 13th Ed. 1971	A.S.T.M. Standards Pt. 23 1972	EPA Methods 1971
Alkalinity (as $CaCO_3$) 00410	Titration-Electrometric or Automated Method-Methyl Orange End Point	p. 370	p. 143	p. 6 p. 8
BOD 5 Day mg/liter 00310	Modified Winkler or Probe Method	p. 489	p. 618	p. 15
Chemical Oxygen Demand (COD) mg/liter 00340	Dichromate Reflux	p. 495	p. 219	p. 17
Total Solids mg/liter 00500	Gravimetric, 105°C.	p. 535	–	p. 280
Total Dissolved (Filterable) Solids mg/liter 70300	Glass Fiber Filtration 180°C.	–	–	p. 275
Total Suspended (Non-Filterable) Solids mg/liter 00530	Glass Fiber Filtration 103-105°C.	p. 537	–	p. 278
Total Volatile Solids mg/liter 00505	Gravimetric Method 550°C.	p. 536	–	p. 282
Settleable Matter (Residue) ml/liter 00545	Imhoff Cone, by Volume	p. 539	–	–
Ammonia (as N) mg/liter 00610	Distillation-Nesslerization or Automated Phenolate	–	–	p. 134 p. 141
Kjeldahl Nitrogen (as N) mg/liter 00625	Digestion-Distillation or Automated-Digestion and Phenolate	p. 469	–	p. 149 p. 157
Nitrate (as N) mg/liter 00620	Brucine Sulfate or Automated-Hydrazine or Cadmium Reduction	p. 461	p. 124	p. 185 p. 170 p. 175
Total Phosphorus (as P) mg/liter 00665	Persulfate Digestion and Single Reagent or Manual Digestion and Automated Single Reagent or Stannous Chloride	p. 526	–	p. 246 p. 235 p. 259
Acidity (as $CaCO_3$) mg/liter 00435	Volumetric-color or Electrometric End Point	p. 370	p. 143	p. 5
Total Organic Carbon (TOC) mg/liter 00680	Combustion-Infrared Method	p. 257	p. 702	p. 221
Hardness-Total (as $CaCO_3$) mg/liter 00900	EDTA Titration-Automated Colorimetric, or Atomic Absorption Spectrophotometer	p. 179	p. 169	p. 76 p. 78
Nitrite (as N) mg/liter 00615	Diazotization-Manual or Automated Colorimetric	p. 468	p. 228	p. 195

TABLE A (Continued)

Total Metal Content				
Parameter & Units	Method	References		
		Standard Methods 13th Ed. 1971	A.S.T.M. Standards Pt. 23 1972	EPA Methods 1971
Aluminum-Total** mg/liter 01105	Atomic Absorption Spectrophotometer	p. 57	–	p. 98
Antimony-Total** mg/liter 01097	Atomic Absorption Spectrophotometer	–	–	p. 83
Arsenic-Total** mg/liter 01002	Silver Diethyldithiocarbamate or Atomic Absorption Spectrophotometer	p. 62	–	p. 13 p. 99
Barium-Total** mg/liter 01007	Atomic Absorption Spectrophotometer	p. 66	–	p. 83
Beryllium-Total** mg/liter 01012	Aluminon or Atomic Absorption Spectrophotometer	p. 67	–	p. 83
Boron-Total** mg/liter 01022	Curcumin, Carmine or Potentiometric	p. 69	–	p. 83
Cadmium-Total** mg/liter 01027	Atomic Absorption Spectrophotometer or Colorimetric	p. 422	p. 692	p. 101
Calcium-Total** mg/liter 00916	EDTA Titration or Atomic Absorption Spectrophotometer or Colorimetric	p. 84	p. 692	p. 102
Chromium-Total** mg/liter 01034	Atomic Absorption Spectrophotometer or Colorimetric	p. 426	p. 692	p. 104
Cobalt-Total** mg/liter 01037	Atomic Absorption Spectrophotometer	–	p. 692	p. 83
Copper-Total** mg/liter 01042	Atomic Absorption Spectrophotometer or Colorimetric	p. 430	p. 692	p. 106
Iron-Total** mg/liter 01045	Atomic Absorption Spectrophotometer or Colorimetric	p. 433	p. 692	p. 108
Lead-Total** mg/liter 01051	Atomic Absorption Spectrophotometer or Colorimetric	p. 436	p. 692	p. 110
Magnesium-Total** mg/liter 00927	Atomic Absorption Spectrophotometer or Colorimetric	p. 416	p. 692	p. 112
Manganese-Total** mg/liter 01055	Atomic Absorption Spectrophotometer	–	p. 692	p. 114

**See Note 2 at end of table.

TABLE A (Continued)

Total Metal Content				
Parameter & Units	Method	References		
		Standard Methods 13th Ed. 1971	A.S.T.M. Standards Pt. 23 1972	EPA Methods 1971
Mercury-Total** mg/liter 71900	Flameless Atomic Absorption Procedure. For updated method, see JAWWA, *64*, No. 1, pp. 20-25 (Jan. 1972)	–	–	p. 121
Molybdenum-Total** mg/liter 01062	Atomic Absorption Spectrophotometer	–	–	p. 83
Nickel-Total** mg/liter 01067	Absorption or Atomic Spectrophotometer	p. 443	p. 692	p. 83
Potassium-Total** mg/liter 00937	Colorimetric, Flame Photometric or Atomic Absorption Spectrophotometer	p. 285 p. 283	p. 326	p. 115
Selenium-Total** mg/liter 01147	Colorimetric-Diaminobenzidine	p. 296	–	p. 271
Silver-Total** mg/liter 01077	Atomic Absorption Spectrophotometer	p. 309	–	p. 117
Sodium-Total** mg/liter 00929	Flame Photometric or Atomic Absorption Spectrophotometer	p. 317	p. 326	p. 118
Thallium-Total** mg/liter 01059	Atomic Absorption Spectrophotometer			p. 83
Tin-Total** mg/liter 01102	Atomic Absorption Spectrophotometer	–	–	p. 83
Titanium-Total** mg/liter 01152	Atomic Absorption Spectrophotometer	–	–	p. 83
Zinc-Total** mg/liter 01092	Colorimetric, or Atomic Absorption Spectrophotometer	p. 444 p. 211	p. 692	p. 120

**See Note 2 at end of table.

TABLE A (Continued)

Chemical Parameters				
Parameter & Units	Method	References		
		Standard Methods 13th Ed. 1971	A.S.T.M. Standards Pt. 23 1972	EPA Methods 1971
Organic Nitrogen (as N) mg/liter 00605	Kjeldahl Nitrogen Minus Ammonia (N)	p. 468	–	p. 149
Ortho-Phosphate (as P) mg/liter 70507	Direct Single Reagent, Automated Colorimetric-Single Reagent or Stannous Chloride	p. 532	p. 42	p. 235 p. 246 p. 259
Sulfate (as SO_4) mg/liter 00945	Turbidimetric or Automated Colorimetric-Barium Chloranilate	p. 334	p. 52	p. 286 p. 288
Sulfide (as S) mg/liter 00745	Titrimetric-Iodide, Methylene Blue Color Matching or Methylene Blue Colorimetric	p. 551	–	p. 294
Sulfite (as SO_3) mg/liter 00740	Iodide-Iodate Titration	p. 337	p. 261	–
Bromide mg/liter 71870	Colorimetric	p. 75	p. 214	–
Chloride mg/liter 00940	Mercuric Nitrate or Automated Colorimetric-Ferric Thiocyanate	p. 97	p. 21	p. 29 p. 31
Cyanide mg/liter 00720	Distillation-Silver Nitrate Titration or Pyridine Pyrazolone Colorimetric	p. 404	p. 556	p. 41
Fluoride mg/liter 00951	Distillation-Spadns Automated Complexone or Electrode	p. 171	p. 191	p. 64 p. 66 p. 72
Chlorine-Total Residual mg/liter 50060	Amperometric or Colorimetric	p. 107	–	–
Oil and Grease mg/liter 00550	Liquid-Liquid Extraction	p. 254	–	–
Phenols mg/liter 32730	Colorimetric, 4-AAP	p. 502	p. 445	p. 232
Surfactants mg/liter 38260	Methylene Blue Procedure	p. 559	p. 619	p. 131
Algicides* mg/liter 74051	Specify Method Used in "Remarks"	–	–	–
Chlorinated Organic Compounds* (Except Pesticides) 74052	Specify Method Used in "Remarks"	–	–	–
Pesticides* mg/liter 74053	Specify Method Used in "Remarks"	–	–	–

*See Note 1 at end of table.

TABLE A (Continued)

Physical and Biological Parameters				
Parameter & Units	Method	References		
		Standard Methods 13th Ed. 1971	A.S.T.M. Standards Pt. 23 1972	EPA Methods 1971
Color Pt-Co units 00080	Platinum-Cobalt Visual	p. 160	–	p. 38
Specific Conductance micromhos/cm at 25°C 00095	Wheatstone Bridge	p. 323	p. 163	p. 284
Turbidity Jackson units 00070	Turbidimeter	p. 577	p. 467	p. 308
Fecal Streptococci Bacteria number/100 ml 74054	Specify Method Used in "Remarks"	p. 688	–	–
Coliform Bacteria, Fecal number/100 ml 74055	Specify Method Used in "Remarks"	p. 669 p. 684	–	–
Coliform Bacteria, Total number/100 ml 74056	Specify Method Used in "Remarks"	p. 664 p. 679	–	–

TABLE A (Continued)

Radioactive Parameters		
Type of Radiation	References	
	Standard Methods 13th Ed. 1971	A.S.T.M. Standards Pt. 23 1972
Alpha-Total picocurie/liter 01501	p. 598	p. 509
Alpha Counting Error picocurie/liter 01502	p. 598	p. 512
Beta-Total picocurie/liter 03501	p. 598	p. 473
Beta Counting Error picocurie/liter 03502	p. 598	p. 478

Note 1.—*Interim procedures for algicides, chlorinated organic compounds, and pesticides can be obtained from the Analytical Quality Control Laboratory, National Environmental Research Center, Cincinnati, Ohio 45268, or from the Regional Offices of the Environmental Protection Agency.

Note 2.—**For the determination of total metals the sample is not filtered before processing. Choose a volume of sample appropriate for the expected level of metals. If much suspended material is present, as little as 50–100 ml of well-mixed sample will most probably be sufficient. (The sample volume required may also vary proportionally with the number of metals to be determined.)

Transfer a representative aliquot of the well-mixed sample to a Griffin beaker and add 3 ml of concentrated distilled HNO_3. Place the beaker on a hotplate and evaporate to dryness making certain that the sample does not boil. Cool the beaker and add another 3 ml portion of distilled concentrated HNO_3. Cover the beaker with a watch glass and return to the hotplate. Increase the temperature of the hotplate so that a gentle reflux action occurs. Continue heating, adding additional acid as necessary until the digestion is complete, generally indicated by a light-colored residue. Add sufficient distilled 1 : 1 HCl and again warm the beaker to dissolve the residue. Wash down the beaker walls and watch glass with distilled water and filter the sample to remove silicates and other insoluble material that could clog the atomizer. Adjust the volume to some predetermined value based on the expected metal concentrations. The sample is now ready for analysis. Concentrations so determined shall be reported as "total." STORET parameter numbers for reporting this type of data have been assigned and are given for each metal.

☆ U. S. GOVERNMENT PRINTING OFFICE : 1979--281-147/115

FOR AGENCY USE

NATIONAL POLLUTANT DISCHARGE ELIMINATION SYSTEM
APPLICATION FOR PERMIT TO DISCHARGE WASTEWATER

STANDARD FORM C – MANUFACTURING AND COMMERCIAL

SECTION I. APPLICANT AND FACILITY DESCRIPTION

Unless otherwise specified on this form all items are to be completed. If an item is not applicable indicate 'NA.'

ADDITIONAL INSTRUCTIONS FOR SELECTED ITEMS APPEAR IN SEPARATE INSTRUCTION BOOKLET AS INDICATED. REFER TO BOOKLET BEFORE FILLING OUT THESE ITEMS.

Please Print or Type

1. **Legal Name of Applicant** (see instructions)	101	
2. **Mailing Address of Applicant** (see instructions)		
Number & Street	102a	
City	102b	
State	102c	
Zip Code	102d	
3. **Applicant's Authorized Agent** (see instructions)		
Name and Title	103a	
Number & Street Address	103b	
City	103c	
State	103d	
Zip Code	103e	
Telephone	103f	Area Code ____ Number ____
4. **Previous Application** If a previous application for a National or Federal discharge permit has been made, give the date of application. Use numeric designation for date.	104	YR ___ MO ___ DAY ___

I certify that I am familiar with the information contained in this application and that to the best of my knowledge and belief such information is true, complete, and accurate.

Printed Name of Person Signing	102e	Title
Signature of Applicant or Authorized Agent	102f	Date Application Signed (YR ___ MO ___ DAY ___)

18 U.S.C. Section 1001 provides that:

Whoever, in any matter within the jurisdiction of any department or agency of the United States knowingly and wilfully falsifies, conceals or covers up by any trick, scheme, or device a material fact, or makes any false, fictitious or fraudulent statement or representation, or makes or uses any false writing or document knowing same to contain any false, fictitious or fraudulent statement or entry, shall be fined not more than $10,000 or imprisoned not more than five years, or both.

FOR AGENCY USE

Received: ___ ___ ___ YR MO DAY

OFFICE: ____EPA Region Number
____State

EPA Form 7550-23 (7-73)

This section contains 3 pages.

FOR AGENCY USE

5. Facility/Activity (see instructions) Give the name, ownership, and physical location of the plant or other operating facility where discharge(s) does or will occur.

Name — 105a

— 105a

— 105a

Ownership (Public, Private or Both Public and Private) — 105b ☐ PUB ☐ PRV ☐ BPP

Check block if Federal Facility and give GSA Inventory Control Number — 105c ☐ FED — 105d

Location

Street & Number — 105e

City — 105f

County — 105g

State — 105h

6. Nature of Business State the nature of the business conducted at the plant or operating facility. — 106a

— 106a

106b AGENCY USE

7. Facility Intake Water (see instructions) Indicate water intake volume per day by sources. Estimate average volume per day in thousand gallons per day.

Municipal or private water system — 107a _____ thousand gallons per day

Surface water — 107b _____ thousand gallons per day

Groundwater — 107c _____ thousand gallons per day

Other* — 107d _____ thousand gallons per day

Total Item 7 — 107e _____ thousand gallons per day

*If there is intake water from 'other,' specify the source. — 107f

8. Facility Water Use Estimate average volume per day in thousand gallons per day for the following types of water usage at the facility. (see instructions)

Noncontact cooling water — 108a _____ thousand gallons per day

Boiler feed water — 108b _____ thousand gallons per day

Process water (including contact cooling water) — 108c _____ thousand gallons per day

Sanitary water — 108d _____ thousand gallons per day

Other* — 108e _____ thousand gallons per day

Total Item 8 — 108f _____ thousand gallons per day

*If there are discharges to 'other,' specify. — 108g

If there is 'Sanitary' water use, give the number of people served. — 108h _____ people served

EPA Form 7550-23 (7-73)

OMB No. 158-R0180

FOR AGENCY USE

9. All Facility Discharges and other Losses; Number and Discharge (see instructions) Volume Specify the number of discharge points and the volume of water discharged or lost from the facility according to the categories below. Estimate average volume per day in thousand gallons per day.

		Number of Discharge Points		Total Volume Used or Discharged, Thousand Gal/Day
Surface Water	109a1		109a2	
Sanitary wastewater transport system	109b1		109b2	
Storm water transport system	109c1		109c2	
Combined sanitary and storm water transport system	109d1		109d2	
Surface impoundment with no effluent	109e1		109e2	
Underground percolation	109f1		109f2	
Well injection	109g1		109g2	
Waste acceptance firm	109h1		109h2	
Evaporation	109i1		109i2	
Consumption	109j1		109j2	
Other*	109k1		109k2	
Facility discharges and volume Total Item 9.	109l1		109l2	

*If there are discharges to 'other,' specify. 109m1

10. Permits, Licenses and Applications
List all existing, pending or denied permits, licenses and applications related to discharges from this facility (see instructions).

110	Issuing Agency (a)	For Agency Use (b)	Type of Permit or License (c)	ID Number (d)	Date Filed YR/MO/DA (e)	Date Issued YR/MO/DA (f)	Date Denied YR/MO/DA (g)	Expiration Date YR/MO/DA (h)
1.								
2.								
3.								

11. Maps and Drawings
Attach all required maps and drawings to the back of this application. (see instructions)

12. Additional Information

112 Item Number	Information

FOR AGENCY USE

STANDARD FORM C – MANUFACTURING AND COMMERCIAL

SECTION II. BASIC DISCHARGE DESCRIPTION

Complete this section for each discharge indicated in Section I, Item 9, that is to surface waters. This includes discharges to municipal sewerage systems in which the wastewater does not go through a treatment works prior to being discharged to surface waters. Discharges to wells must be described where there are also discharges to surface waters from this facility. **SEPARATE DESCRIPTIONS OF EACH DISCHARGE ARE REQUIRED EVEN IF SEVERAL DISCHARGES ORIGINATE IN THE SAME FACILITY.** All values for an existing discharge should be representative of the twelve previous months of operation. If this is a proposed discharge, values should reflect best engineering estimates.

ADDITIONAL INSTRUCTIONS FOR SELECTED ITEMS APPEAR IN SEPARATE INSTRUCTION BOOKLET AS INDICATED. REFER TO BOOKLET BEFORE FILLING OUT THESE ITEMS.

1. Discharge Serial No. and Name

a. **Discharge Serial No.** (see instructions) — 201a: _____

b. **Discharge Name** Give name of discharge, if any. (see instructions) — 201b: _____

c. **Previous Discharge Serial No.** If previous permit application was made for this discharge (see Item 4, Section I), provide previous discharge serial number. — 201c: _____

2. Discharge Operating Dates

a. **Discharge Began Date** If the discharge described below is in operation, give the date (within best estimate) the discharge began. — 202a: ____ ____ YR MO

b. **Discharge to Begin Date** If the discharge has never occurred but is planned for some future date, give the date (within best estimate) the discharge will begin. — 202b: ____ ____ YR MO

c. **Discharge to End Date** If discharge is scheduled to be discontinued within the next 5 years, give the date (within best estimate) the discharge will end. — 202c: ____ ____ YR MO

3. Engineering Report Available Check if an engineering report is available to reviewing agency upon request. (see instructions) — 203: ☐

4. Discharge Location Name the political boundaries within which the point of discharge is located.

			Agency Use
State	204a: _____	204d	
County	204b: _____	204e	
(If applicable) City or Town	204c: _____	204f	

5. Discharge Point Description Discharge is into (check one): (see instructions)

Stream (includes ditches, arroyos, and other intermittent watercourses)	205a	☐STR
Lake		☐LKE
Ocean		☐OCE
Municipal Sanitary Wastewater Transport System		☐MTS
Municipal Combined Sanitary and Storm Transport System		☐MCS

DISCHARGE SERIAL NUMBER

_____

FOR AGENCY USE

Municipal Storm Water Transport System ☐ STS

Well (injection) ☐ WEL

Other ☐ OTH

If 'other' is checked, specify 205b _____

6. Discharge Point — Lat/Long Give the precise location of the point of discharge to the nearest second.

Latitude 206a ____DEG ____MIN ____SEC

Longitude 206b ____DEG ____MIN ____SEC

7. Discharge Receiving Water Name Name the waterway at the point of discharge.(see instructions) 207a _____

_____

If the discharge is through an outfall that extends beyond the shoreline or is below the mean low water line, complete item 8.

207b

For Agency Use		
Major	Minor	Sub

207c

For Agency Use
303e

8. Offshore Discharge

a. Discharge Distance from Shore 208a _____feet

b. Discharge Depth Below Water Surface 208b _____feet

9. Discharge Type and Occurrence

a. Type of Discharge Check whether the discharge is continuous or intermittent. (see instructions) 209a ☐ (con) Continuous ☐ (int) Intermittent

b. Discharge Occurrence Days per Week Enter the average number of days per week (during periods of discharge) this discharge occurs. 209b ___days per week

c. Discharge Occurrence —Months If this discharge normally operates (either intermittently, or continuously) on less than a year-around basis (excluding shutdowns for routine maintenance), check the months during the year when the discharge is operating. (see instructions) 209c ☐JAN ☐FEB ☐MAR ☐APR ☐MAY ☐JUN ☐JUL ☐AUG ☐SEP ☐OCT ☐NOV ☐DEC

Complete items 10 and 11 if "intermittent" is checked in item 9.a. Otherwise, proceed to item 12.

10. Intermittent Discharge Quantity State the average volume per discharge occurrence in thousands of gallons. 210 _____thousand gallons per discharge occurrence.

11. Intermittent Discharge Duration and Frequency

a. Intermittent Discharge Duration Per Day State the average number of hours per day the discharge is operating. 211a ____hours per day

b. Intermittent Discharge Frequency State the average number of discharge occurrences per day during days when discharging. 211b ____discharge occurrences per day

12. Maximum Flow Period Give the time period in which the maximum flow of this discharge occurs. 212 From ____ to ____ month month

DISCHARGE SERIAL NUMBER

FORM APPROVED
OMB No. 158—R0100

FOR AGENCY USE

13. Activity Description Give a narrative description of activity producing this discharge.(see instructions)

213a

14. Activity Causing Discharge For each SIC Code which describes the activity causing this discharge, supply the type and maximum amount of either the raw material consumed (Item 14a) *or* the product produced (Item 14b) in the units specified in Table I of the Instruction Booklet. *For* SIC Codes not listed in Table I, use raw material or production units normally used for measuring production.(see instructions)

a. Raw Materials

	SIC Code	Name	Maximum Amount/Day	Unit (See Table I)	Shared Discharges (Serial Number)
214a	(1)	(2)	(3)	(4)	(5)

b. Products

	SIC Code	Name	Maximum Amount/Day	Unit (See Table I)	Shared Discharges (Serial Number)
214b	(1)	(2)	(3)	(4)	(5)

DISCHARGE SERIAL NUMBER

FOR AGENCY USE

15. Waste Abatement

a. Waste Abatement Practices
Describe the waste abatement practices used on this discharge with a brief narrative. (see instructions)

215a Narrative: _____

b. Waste Abatement Codes
Using the codes listed in Table II of the Instruction Booklet, describe the waste abatement processes for this discharge in the order in which they occur if possible.

215b

(1) _____, (2) _____, (3) _____,
(4) _____, (5) _____, (6) _____,
(7) _____, (8) _____, (9) _____,
(10) _____, (11) _____, (12) _____,
(13) _____, (14) _____, (15) _____,
(16) _____, (17) _____, (18) _____,
(19) _____, (20) _____, (21) _____,
(22) _____, (23) _____, (24) _____,
(25) _____.

DISCHARGE SERIAL NUMBER

FORM APPROVED
OMB No. 158–R0100

FOR AGENCY USE

16. Wastewater Characteristics

Check the box beside each constituent which is present in the effluent (discharge water). This determination is to be based on actual analysis or best estimate.(see instructions)

Parameter 216	Present	Parameter 216	Present
Color 00080		Copper 01042	
Ammonia 00610		Iron 01045	
Organic nitrogen 00605		Lead 01051	
Nitrate 00620		Magnesium 00927	
Nitrite 00615		Manganese 01055	
Phosphorus 00665		Mercury 71900	
Sulfate 00945		Molybdenum 01062	
Sulfide 00745		Nickel 01067	
Sulfite 00740		Selenium 01147	
Bromide 71870		Silver 01077	
Chloride 00940		Potassium 00937	
Cyanide 00720		Sodium 00929	
Fluoride 00951		Thallium 01059	
Aluminum 01105		Titanium 01152	
Antimony 01097		Tin 01102	
Arsenic 01002		Zinc 01092	
Beryllium 01012		Algicides* 74051	
Barium 01007		Chlorinated organic compounds* 74052	
Boron 01022		Pesticides* 74053	
Cadmium 01027		Oil and grease 00550	
Calcium 00916		Phenols 32730	
Cobalt 01037		Surfactants 38260	
Chromium 01034		Chlorine 50060	
Fecal coliform bacteria 74055		Radioactivity* 74050	

*Specify substances, compounds and/or elements in Item 26.

Pesticides (insecticides, fungicides, and rodenticides) must be reported in terms of the acceptable common names specified in *Acceptable Common Names and Chemical Names for the Ingredient Statement on Pesticide Labels*, 2nd Edition, Environmental Protection Agency, Washington, D.C. 20250, June 1972, as required by Subsection 162.7(b) of the Regulations for the Enforcement of the Federal Insecticide, Fungicide, and Rodenticide Act.

DISCHARGE SERIAL NUMBER

FOR AGENCY USE

17. Description of Intake and Discharge

For each of the parameters listed below, enter in the appropriate box the value or code letter answer called for.(see instructions)

In addition, enter the parameter name and code and all required values for any of the following parameters if they were checked in item 16: ammonia, cyanide, aluminum, arsenic, beryllium, cadmium, chromium, copper, lead, mercury, nickel, selenium, zinc, phenols, oil and grease, and chlorine (residual).

Parameter and Code 217a	Influent		Effluent					
	Untreated Intake Water (Daily Average) (1)	In-Plant Treated Intake Water (Daily Average) (2)	Daily Average (3)	Minimum Value Observed or Expected During Discharge Activity (4)	Maximum Value Observed or Expected During Discharge Activity (5)	Frequency of Analysis (6)	Number of Analyses (7)	Sample Type (8)
Flow* Gallons per day 00056								
pH Units 00400			X					
Temperature (winter) ° F 74028								
Temperature (summer) ° F 74027								
Biochemical Oxygen Demand (BOD 5-day) mg/l 00310								
Chemical Oxygen Demand (COD) mg/l 00340								
Total Suspended (nonfilterable) Solids mg/l 00530								
Specific Conductance micromhos/cm at 25° C 00095			X					
Settleable Matter (residue) ml/l 00545								

*Other discharges sharing intake flow (serial numbers) (see instructions)

17. (Cont'd.)

Parameter and Code 217a	Influent		Effluent					
	Untreated Intake Water (Daily Average) (1)	In-Plant Treated Intake Water (Daily Average) (2)	Daily Average (3)	Minimum Value Observed or Expected During Discharge Activity (4)	Maximum Value Observed or Expected During Discharge Activity (5)	Frequency of Analysis (6)	Number of Analyses (7)	Sample Type (8)

18. **Plant Controls** Check if the following plant controls are available for this discharge.

218

Alternate power source for major pumping facility. ☐ APS

Alarm or emergency procedure for power or equipment failure ☐ ALM

Complete item 19 if discharge is from cooling and/or steam water generation and water treatment additives are used.

19. **Water Treatment Additives** If the discharge is treated with any conditioner, inhibitor, or algicide, answer the following:

a. Name of Material(s) 219a _____

b. Name and address of manufacturer 219b _____

c. Quantity (pounds added per million gallons of water treated). 219c _____

DISCHARGE SERIAL NUMBER

FOR AGENCY USE

d. Chemical composition of these additives (see instructions). 219d

Complete items 20-25 if there is a thermal discharge (e.g., associated with a steam and/or power generation plant, steel mill, petroleum refinery, or any other manufacturing process) and the total discharge flow is 10 million gallons per day or more. (see instructions)

20. Thermal Discharge Source Check the appropriate item(s) indicating the source of the discharge. (see instructions) 220

- ☐ Boiler Blowdown — BLBD
- ☐ Boiler Chemical Cleaning — BCCL
- ☐ Ash Pond Overflow — APOF
- ☐ Boiler Water Treatment — Evaporator Blowdown — EPBD
- ☐ Oil or Coal Fired Plants — Effluent from Air Pollution Control Devices — OCFP
- ☐ Condense Cooling Water — COND
- ☐ Cooling Tower Blowdown — CTBD
- ☐ Manufacturing Process — MFPR
- ☐ Other — OTHR

21. Discharge/Receiving Water Temperature Difference

Give the maximum temperature difference between the discharge and receiving waters for summer and winter operating conditions. (see instructions)

Summer 221a _____ °F.

Winter 221b _____ °F.

22. Discharge Temperature, Rate of Change Per Hour 222 _____ °F./hour

Give the maximum possible rate of temperature change per hour of discharge under operating conditions. (see instructions)

23. Water Temperature, Percentile Report (Frequency of Occurrence)

In the table below, enter the temperature which is exceeded 10% of the year, 5% of the year, 1% of the year and not at all (maximum yearly temperature). (see instructions)

Frequency of occurrence	10%	5%	1%	Maximum
a. Intake Water Temperature (Subject to natural changes) 223a	°F	°F	°F	°F
b. Discharge Water Temperature 223b	°F	°F	°F	°F

24. Water Intake Velocity (see instructions) 224 _____ feet/sec.

25. Retention Time Give the length of time, in minutes, from start of water temperature rise to discharge of cooling water. (see instructions) 225 _____ minutes

FORM APPROVED
OMB No. 158-R0100

DISCHARGE SERIAL NUMBER

FOR AGENCY USE

26. Additional Information

Item	Information

OMB No. 158–R0100

FOR AGENCY USE

STANDARD FORM C – MANUFACTURING AND COMMERCIAL

SECTION III. WASTE ABATEMENT REQUIREMENTS & IMPLEMENTATION (CONSTRUCTION) SCHEDULE

This section requires information on any uncompleted implementation schedule which may have been imposed for construction of waste abatement facilities. Such requirements and implementation schedules may have been established by local, State, or Federal agencies or by court action. In addition to completing the following items, a copy of an official implementation schedule should be attached to this application. IF YOU ARE SUBJECT TO SEVERAL DIFFERENT IMPLEMENTATION SCHEDULES, EITHER BECAUSE OF DIFFERENT LEVELS OF AUTHORITY IMPOSING DIFFERENT SCHEDULES (Item 1a.) AND/OR STAGED CONSTRUCTION OF SEPARATE OPERATION UNITS (Item 1c), SUBMIT A SEPARATE SECTION III FOR EACH ONE.

FOR AGENCY USE
SCHED. NO. _____

1. **Improvements** 300

   a. **Discharge Serial Number Affected** List the discharge serial numbers, assigned in Section II, that are covered by this implementation schedule. 301a _____, _____, _____
   _____, _____, _____

   b. **Authority Imposing Requirements** Check the appropriate item indicating the authority for implementation schedule. If the identical implementation schedule has been ordered by more than one authority, check the appropriate items. (See instructions) 301b

   - Locally developed plan ☐ LOC
   - Areawide Plan ☐ ARE
   - Basic Plan ☐ BAS
   - State approved implementation schedule ☐ SQS
   - Federal approved water quality standards implementation plan. ☐ WQS
   - Federal enforcement procedure or action ☐ ENF
   - State court order ☐ CRT
   - Federal court order ☐ FED

   c. **Facility Requirement.** Specify the 3-character code of those listed below that best describes in general terms the requirement of the implementation schedule and the applicable six-character abatement code(s) from Table II of the Instruction booklet. If more than one schedule applies to the facility because of a staged construction schedule, state the stage of construction being described here with the appropriate general action code. Submit a separate Section III for each stage of construction planned.

   3-character (general) 301c _____

   6-character (specific) (see Table II) 301d _____
   _____
   _____

New Facility	NEW
Modification (no increase in capacity or treatment)	MOD
Increase in Capacity	INC
Increase in Treatment Level	INT
Both Increase in Treatment Level and Capacity	ICT
Process Change	PRO
Elimination of Discharge	ELI

FOR AGENCY USE

2. Implementation Schedule and 3. Actual Completion Dates

Provide dates imposed by schedule and any actual dates of completion for implementation steps listed below. Indicate dates as accurately as possible. (see instructions)

Implementation Steps		2. Schedule (Yr./Mo./Day)		3. Actual Completion (Yr./Mo./Day)
a. Preliminary plan complete	302a	___/___/___	303a	___/___/___
b. Final plan submission	302b	___/___/___	303b	___/___/___
c. Final plan complete	302c	___/___/___	303c	___/___/___
d. Financing complete & contract awarded	302d	___/___/___	303d	___/___/___
e. Site acquired	302e	___/___/___	303e	___/___/___
f. Begin action (e.g., construction)	302f	___/___/___	303f	___/___/___
g. End action (e.g., construction)	302g	___/___/___	303g	___/___/___
h. Discharge Began	302h	___/___/___	303h	___/___/___
i. Operational level attained	302i	___/___/___	303i	___/___/___

ATTACHMENT AIII

RULES GOVERNING HAZARDOUS WASTE

MANAGEMENT IN TENNESSEE

(PROPOSED December, 1979)

Rule 3	Hazardous Waste Criteria
Rule 4	Hazardous Waste Listing
Rule 5	Simulated Leaching Tests

DRAFT

RULE 3. HAZARDOUS WASTE CRITERIA

3.1. Ignitability

3.1.1. Definition - A waste is ignitable if a representative sample of that waste meets one or more of the following criteria:

A. Is a liquid and has a flash point less than 140°F (60°C) as determined by the method cited below; or

B. Is not a liquid and is liable to cause fires through friction, absorption of moisture, spontaneous chemical changes, or retained heat from manufacturing or processing; or when ignited burns so vigorously and persistently as to create a hazard during its management; or

C. Is a flammable compressed gas as defined in 49 CFR 173.300(b); or

D. Is an oxidizer as defined in 49 CFR 173.151.

3.1.2. Identification Method - Flash points of liquids shall be determined by a Pensky-Martens Closed Cup Tester, using the protocol specified in ASTM Standard D-93-72, or by a Setaflash Closed Tester using the protocol specified in ASTM Standard D-3278-73.

3.1.3. Risk Category

A. A waste determined to be hazardous according to criterion 3.1.1. A. above shall be considered a:

1. Lower-Risk ignitable hazardous waste if its flash point is greater than or equal to 100°F (37.8°C).

2. Higher-Risk ignitable hazardous waste if its flash point is less than 100°F (37.8°C).

B. A waste determined to be hazardous according to criteria 3.1.1. B, C, or D above shall be considered a Higher-Risk ignitable hazardous wastes.

3.2. Corrosivity

3.2.1. Definition - A waste is corrosive if a representative sample of that waste meets one or more of the following criteria:

A. Is aqueous and has a pH less than or equal to 3 or greater than or equal to 12 as determined by the method cited below, or

B. Corrodes steel (SAE 1020) at a rate greater than 0.250 inch per year at a test temperature of 130°F as determined by the method cited below.

DRAFT

3.2.2. Identification Method

A. pH shall be determined, using a pH meter, following the protocol specified in the Manual of Methods for Chemical Analysis of Water and Wastes (EPA-625-16-74-003).

B. Rate of metal corrosion shall be determined using the protocol specified in NACE (National Association of Corrosion Engineers) Standard TM-01-69.

3.2.3. Risk Category

A. A waste determined to be hazardous according to criterion 3.2.1. A. above shall be considered a:

1. Lower-Risk corrosive hazardous waste if its pH is greater than 2 or less than or equal to 12.5.

2. Higher-Risk corrosive hazardous waste if its pH is equal to or less than 2 or greater than 12.5.

B. A waste determined to be hazardous according to criterion 3.2.1. B. above shall be considered a Higher-Risk corrosive hazardous waste.

3.3. Reactivity

3.3.1. Definition - A waste is reactive if a representative sample of that waste meets one or more of the following criteria:

A. Is normally unstable and readily undergoes violent chemical change without detonating, or

B. Reacts explosively or violently with water, or

C. Forms potentially explosive mixtures with water, or

D. Generates toxic gases, vapors, or fumes when mixed with water, or

E. Is a cyanide or sulfide bearing waste which can generate toxic gases, vapors, or fumes when exposed to mild acidic or basic conditions, or

F. Is capable of detonation or explosive reaction but requires a strong initiating source or which must be heated under confinement before initiation can take place, or

G. Is readily capable of detonation or of explosive decomposition or reaction at normal temperatures and pressures, or

H. Is a forbidden explosive as defined in 49 CFR 173.51, a Class A explosive as defined in 49 CFR 173.53, or a Class B explosive as defined in 49 CFR 173.58.

DRAFT

3.3.2. Identification Method - Reactive wastes include pyrophoric substances, explosives, autopolymerizable material and oxidizing agents. If it is not apparent whether a waste is a hazardous waste according to the above criteria, then the methods below can be used to determine reactivity:

A. Thermally unstable wastes can be identified using the following Explosion Temperature Test (this is a modification of the test taken from H. Henkin, and R. G. McGill, Industrial & Engr. Chem. V44 p135):

1. Purpose of Test - To determine whether a material explodes, ignites, or decomposes after a 5-second immersion in a sand bath or low flammability liquid (such as high molecular weight silicone oil) at temperatures up to 125°C and if so, at what temperature.

2. Operating Principle - This test gives an estimate of how close the explosion temperature is to ambient condition for a material, and, hence, provides a measurable indication of thermal instability.

3. Test Description - The material to be tested (25 mg.) is placed in a copper test tube (high thermal conductivity) and immersed in the controlled temperature bath. This test is made at a series of bath temperatures, and the time lag prior to explosion at each temperature is recorded (up to 10 minutes). The bath temperature is raised until a temperature of 125°C is reached if no explosion, ignition, or apparent decomposition occurs.

4. Analysis of Results - Wastes for which explosion, ignition, or decomposition occurs at 125°C after 5 minutes is classed as reactive hazardous wastes.

B. Waste unstable to mechanical shock can be identified using the Bureau of Explosives impact apparatus and the tests cited in 49 CFR 173.53 (b), (c), (d), or (f), as appropriate.

3.3.3. Risk Category - Reactive wastes shall be considered Higher-Risk hazardous wastes.

3.4. Infectivity

3.4.1. Definition - A waste is infectious if it contains any microorganisms or helminths of CDC Classes 2 through 5 of Etiologic Agents (according to the Classification of Etiologic Agents on the Basis of Hazard, September, 1976, U.S. Center for Disease Control, Atlanta, Georgia) in numbers significantly greater than would be expected to be contained in normal municipal refuse.

3.4.2. Identification Method - Wastes from the following sources are arbitrarily designated as infectious hazardous wastes unless the waste does not meet the definition above:

DRAFT

A. The following sections of general medical, surgical, and specialty (except psychiatric) hospitals and veterinary research facilities:

1. Microbiological laboratories
2. Isolation rooms
3. Pathology

B. Commercial and noncommercial laboratories which work with CDC Classes 2 through 5 of Etiologic Agents,

C. Sewage treatment plants, unless sludge generated by such a plant has been stabilized by means of chemical, physical, thermal, or biological treatment processes that result in the significant reduction of odors, volatile organics, and pathogenic microorganisms. These processes are discussed in "Municipal Sludge Management: Environmental Factors; Technical Bulletin" (42 Federal Register 57420). Specifications for the stabilization processes discussed in this publication are given in Process Design Manual for Sludge Treatment and Disposal (EPA 625/1-1-74/006, October 1974).

3.4.3. Risk Category - Infectious wastes shall be considered Lower-Risk hazardous wastes.

3.5. Toxicity

3.5.1. Inorganic

A. Definition - A waste is toxic if the leachate obtained from applying Simulated Leaching Test "A" of Rule 5 to a representative sample of that waste has a concentration, as determined by the methods cited below, of any of the following contaminants greater than the value shown:

Contaminant	Leachate Concentration (milligrams per liter
Arsenic	0.50
Barium	10.0
Cadmium	0.10 *
Chromium	0.50
Lead	0.50
Mercury	0.02
Selenium	0.10
Silver	0.50

B. Identification Method - Concentrations of the above contaminants shall be determined according to the following analytical methods referenced in "Methods for Chemical Analysis of Water and Wastes", U.S. Environmental Protection Agency, Office of Technology Transfer, Washington, D.C. 20460, 1974; or according to equivalent methods cited in the latest edition of "Standard Methods for the Examination of Water and Wastewater":

1. Arsenic - Atomic Absorption Method, pp. 95-96.
2. Barium - Atomic Absorption Method, pp. 97-98.

* As per Errata Sheet Instructions

DRAFT

3. Cadmium - Atomic Absorption Method, pp. 101-103.
4. Chromium - Atomic Absorption Method, pp. 112-113.
5. Lead - Atomic Absorption Method, pp. 112-113.
6. Mercury - Flameless Atomic Absorption Method, pp. 118-126.
7. Selenium - Atomic Absorption Method, p. 145.
8. Silver - Atomic Absorption Method, p. 146.

C. Risk Category - A waste determined to be hazardous because of its inorganic toxicity shall be considered a:

1. Lower-Risk toxic hazardous waste if the leachate concentration of each of the contaminants shown in 3.5.1. A. above is less than ten times the value shown.

2. Higher-Risk toxic hazardous waste if the leachate concentration of any of the contaminants shown in 3.5.1. A. above is equal to or greater than ten times the value shown.

3.5.2. Organic

A. Definition - A waste is toxic if the leachate obtained from applying Simulated Leaching Test "B" of Rule 5 to a representative sample of that waste:

1. Has a concentration, as determined by the methods cited below, of any of the following contaminants greater than the value shown:

Contaminant	Leachate Concentration milligrams per liter
Endrin (1, 2, 3, 4, 10, 10-hexachloro-6, 7-epoxy-1, 4, 4a, 5, 6, 7, 8, 8a-octahydro-1, 4-endo, endo-5, 8-dimethano naphthalene)	0.02 *
Lindane (1, 2, 3, 4, 5, 6-hexachlorocyclohexane gamma isomer)	0.040
Methoxychlor (1, 1, 1-Trichloroethane) 2, 2-bis (p-methoxyphenyl).	1.0
Toxaphene ($C_{10}H_{10}Cl_8$ -technical chlorinated camphene, 67-69 percent chlorine)	0.050
2, 4-D (2, 4-Dichlorophenoxyacetic acid).	1.0
2, 4, 5-TP Silvex (2, 4, 5-Trichlorophenoxypropionic acid).	0.10

* As per Errata Sheet Instructions

DRAFT

2. Contains any organic substance which has a rat oral LD50 value of less than 5,000 mg/kg, as determined by the method cited below, at a concentration in mg/l greater than or equal to 0.056 times that LD50 value expressed in units of mg/kg.

B. Identification Methods

1. Concentrations of the contaminants listed in 3.5.2.A.1. above shall be determined according to the analytical procedure described in the reference cited below:

   a. Endrin, Lindane, Methoxychlor, or Toxaphene - "Method for Organochlorine Pesticides in Industrial Effluents," MDQARL, U.S. Environmental Protection Agency, Cincinnati, Ohio, November 28, 1973.

   b. 2, 4-D and 2, 4, 5 - TP Silvex - "Methods for Chlorinated Phenoxy Acid Herbicides in Industrial Effluents," MDQARL, U.S. Environmental Protection Agency.

2. Rat oral LD50 values used shall be as appropriately listed in the 1979 Registry of Toxic Effects of Chemical Substances, National Institute for Occupational Safety and Health, U.S. Department of Health, Education, and Welfare, Rockville, Maryland 20852. In the absence of rat data, mouse oral LD50 values shall be converted to rat data by multiplying by 0.41. (Thus, the defining oral LD50 limits are 5,000 mg/kg for rats or 12,200 mg/kg for mice.) LD50 data different from that in the NIOSH Registry may be utilized, but must be supported by specific and verified laboratory results.

C. Risk Category - A waste determined to be hazardous because of its organic toxicity shall be considered a:

1.a. Lower-Risk toxic hazardous waste if the leachate concentration of the contaminants shown in 3.5.2.A.1. above is less than ten times the value shown.

b. Higher Risk toxic hazardous waste if the leachate concentration of any of the contaminants shown in 3.5.2.A.1. above is equal to or greater than ten times the value shown.

2.a. Lower-Risk toxic hazardous waste if the leachate contains any organic substance which has a rat oral LD50 value less than 5,000 mg/kg but greater than 500 mg/kg at a concentration greater than 0.056 but less than 0.56 times that LD50 value.

b. Higher-Risk toxic hazardous waste if the leachate contains any organic substance which has a rat oral LD50 value:

   (1) Less than or equal to 500 mg/kg at a concentration greater than 0.056 times that LD50 value.

   (2) Less than 5,000 mg/kg at a concentration greater than 0.56 times that LD50 value.

DRAFT

3.5.3. Carcinogenic

A. Definition - A waste is toxic if the leachate obtained from applying Simulated Leaching Test "B" of Rule 5 to a representative sample of that waste contains more than one mg/liter of any of the following substances:

1.(1) aflatoxins
(2) 4 - aminobiphenyl
(3) auramine
(4) benzene
(5) benzidine
(6) Bis (chloromethyl) ether
(7) chloramphenicol
(8) chloromethyl methyl ether
(9) cyclophosphamide
(10) diethylstilbestrol
(11) melphalan
(12) Bis (2-chloroethyl) sulfide (mustard gas)
(13) 2 - napthylamine
(14) N, N-Bis (2-chloroethyl) - 2 - napthylamine
(15) oxymethenolone
(16) phenacetin
(17) phenytoin
(18) vinyl chloride (chloroethylene)

2.(1) acrylonitrile
(2) benz (c) acridine
(3) benzo (a) anthracene
(4) benzo (b) fluoranthene
(5) benzo (j) fluoranthene
(6) benzo (a) pyrene
(7) benzo (e) pyrene
(8) chrysene
(9) dibenz (a,h) acridine
(10) dibenz (a,j) acridine
(11) dibenz (a,h) anthracene
(12) 7H - dibenzo (c,g) carbazole
(13) dibenzo (a,h) pyrene
(14) dibenzo (a,i) pyrene
(15) indeno (1,2,3-cd) pyrene
(16) N-nitrosodi-n-butylamine
(17) N-nitrosodiethanolamine
(18) N-nitrosodiethylamine
(19) N-nitrosodimethylamine
(20) N-nitrosodi-n-propylamine
(21) N-nitroso-n-ethylurea
(22) N-nitroso-n-methylurea
(23) N-nitrosomethylvinylamine
(24) N-nitrosomorpholine
(25) N'-nitrosonornicotine
(26) N-nitrosopiperidine
(27) N-nitrosopyrrolidine
(28) N-nitrososarcosine
(29) polyvinyl pyrrolidone
(30) streptozotocin

DRAFT

B. Identification Method - Carcinogen concentrations in the leachate shall be determined according to appropriate analytical methods.

C. Risk Category - A waste determined to be hazardous because of its carcinogenicity shall be considered a:

1. Lower-Risk toxic hazardous waste if the leachate contains more than one mg/liter of any substance in A.2. above.

2. Higher-Risk toxic hazardous waste if the leachate contains more than one mg/liter of any substance in A.1. above.

DH/ah

DRAFT

RULE 4. HAZARDOUS WASTE LISTING

4.1. Basis for Listing - Each waste included in this Rule is listed because it is expected that such waste will meet one or more of the criteria of Rule 3. The letter(s) in parentheses following each listed waste indicates the criterion on which the listing is based, according to the following legend:

I - ignitable
C - corrosive
R - reactive
N - infectious
T - toxic inorganic
O - toxic organic
G - carcinogenic

4.2. Hazardous wastes: General

(1) Waste chlorinated hydrocarbons from degreasing operations (I, T, O)
(2) Waste non-halogenated organic solvents (such as methanol, acetone, isopropyl alcohol, polyvinyl alcohol, stoddard solvent, and methyl ethyl ketone) and solvent sludges from cleaning, compounding, milling, and other processes (I, O)
(3) Waste lubricating, hydraulic, or cutting oil (T, O)
(4) Paint wastes (such as used rags, slops, latex sludge, spent solvent)
  (a) Solvent - based (I, T, O)
  (b) Water-based (T)
(5) Gasoline storage tank bottoms, leaded (T)
(6) Spent or waste cyanide solutions or sludges (R,T)
(7) Etching acid solution or sludges (T, C)
(8) Waste paint and varnish remover or stripper (I, O)
(9) Waste non-halogenated organic solvents and still bottoms from solvent recovery (I, O)
(10) Waste solvents and solvent recovery still bottoms (halogenated) (O)
(11) Waste or waste off-spec toluene diisocyanate (I, R, O)
(12) Leachate from hazardous waste landfills (T, O, G)
(13) Electroplating wastewater treatment sludge (T)
(14) Waste pesticide materials (such as unused or off-spec pesticides, spill clean-up residues and debris, used containers) (T, O, G)
(15) Materials which would normally be shipped as a DOT "Poison A", "Poison B", or "ORM-A" material (49 CFR 172.101), but which are waste or off-spec; or clean-up residues and debris from spills of materials so classified by DOT; or containers which have held materials so classified (T, O, G)
(16) Materials listed in Rule 3.5.3.A, but which are waste or off-spec; or clean-up residues and debris from spills of those listed materials; or containers which have held those listed materials (G)
(17) Reactor clean-up wastes from the chlorination, dehydrochlorination, or oxychlorination of aliphatic hydrocarbons or cyclic aliphatic hydrocarbons (O, G)
(18) Fractionation and distillation bottoms from the separation of chlorinated aliphatic hydrocarbons or chlorinated cyclic aliphatic hydrocarbons (O, G)
(19) Washer wastes and spent catalyst from the production of chlorinated aliphatic hydrocarbons or chlorinated cyclic aliphatic hydrocarbons (O, G)

(20) Batch residues from the batch production of chlorinated polymers (O, G)
(21) Solution residues from the production of chlorinated polymers (O, G)
(22) Reactor clean-up wastes from the chlorination of aromatic hydrocarbons (O, G)
(23) Fractionation and distillation bottoms from the separation of chlorinated aromatic hydrocarbons (O, G)
(24) Washer wastes from the production of chlorinated aromatic hydrocarbons (O, G)

4.3. Infectious Hazardous Wastes: Sources

(1) Wastes from microbiological laboratories, isolation rooms, and pathology sections of general medical, surgical, and specialty (except psychiatric) hospitals (N)
(2) Wastes from microbiological laboratories, isolation rooms, and pathology sections of veterinary research facilities (N)
(3) Wastes from commercial and noncommerical laboratories which work with CDC Classes 2 through 5 of Etiologic Agents (N)
(4) Sludges from sewage treatment plants, unless such sludges have been stabilized (N)

4.4. Hazardous Wastes: Processes - The four - digit number preceding each of the following listings is the SIC Code associated with the generating process.

(1) 2231: Wool fabric dyeing and finishing wastewater treatment sludges (T, O)
(2) 2261-2: Woven fabric dyeing and finishing wastewater treatment sludges (T, O)
(3) 2250: Knit fabric dyeing and finishing wastewater treatment sludges (O, T)
(4) 2269: Yarn and stock dyeing and finishing wastewater treatment sludges (O, T)
(5) 2279: Carpet dyeing and finishing wastewater treatment sludges (O, T)
(6) 2299: Wool scouring wastewater treatment sludges (T)
(7) 2812: Mercury-bearing sludges from brine treatment from mercury cell process in chlorine production (T)
(8) 2812: Sodium calcium sludge from production of chlorine by Down Cell process (R)
(9) 2812: Mercury-bearing brine purification muds from mercury cell process in chlorine production (T)
(10) 2812: Waste water treatment sludge from diaphragm cell process in production of chlorine (T)
(11) 2812: Chlorinated hydrocarbon-bearing wastes from diaphragm cell process in chlorine production (O, G)
(12) 2816: Chromium-bearing wastewater treatment sludge from production of chrome green pigment (T)

DRAFT

(13) 2816: Chromium-bearing wastewater treatment sludge and other chromium-bearing wastes from production of chrome oxide green pigment (anhydrous and hydrated) (T)

(14) 2816: Ferric ferrocyanide-bearing wastewater treatment sludges from the production of iron blue pigments (T)

(15) 2816: Mercury-bearing wastewater treatment sludges from the production of mercuric sulfide pigment (T)

(16) 2816: Chromium-bearing wastewater treatment sludges from the production of TiO_2 pigment by the chloride process (T)

(17) 2816: Chromium-bearing wastewater treatment sludges from the production of TiO_2 pigment by sulfate process. (T)

(18) 2816: Arsenic-bearing sludges from purification process in the production of antimony oxide (T)

(19) 2816: Antimony-bearing wastewater treatment sludge from production of antimony oxide (T)

(20) 2816: Chromium- or lead-bearing wastewater treatment sludge from production of chrome yellows and oranges (lead chromate) (T)

(21) 2816: Chromium- or lead-bearing wastewater treatment sludge from production of molybdate orange (lead molybdate, lead chromate) (T)

(22) 2816: Zinc- and chromium-bearing wastewater treatment sludge from production of zinc yellow pigment (hydrated zinc potassium chromate) (T)

(23) 2816: Ash from incinerated still bottoms (Paint and Pigment Production) (T)

(24) 2819: Arsenic-bearing wastewater treatment sludges from production of boric acid (T)

(25) 2834: Arsenic or organo-arsenic containing wastewater treatment sludges from production of veterinary pharmaceuticals (T, O, G)

(26) 2851: Wastewater treatment sludges from paint production (C, T)

(27) 2851: Air pollution control sludges from paint production (T)

(28) 2865: Vacuum still bottoms from the production of maleic anhydride (O)

(29) 2865: Still bottoms from distillation of benzyl chloride (O)

(30) 2865: Distillation residues from fractionating tower for recovery of benzene and chlorobenzenes (G)

(31) 2865: Vacuum distillation residues from purification of 1-chloro - 4 nitrobenzene (O, G)

(32) 2865: Still bottoms or heavy ends from methanol recovery in methyl methacrylate production (O)

(33) 2869: Heavy ends (still bottoms) from fractionator in production of epichlorohydrin (O, G)

(34) 2869: Heavy ends from fractionation in ethyl chloride production (O, G)

(35) 2869: Column bottoms or heavy ends from production of trichloroethylene (O)

(36) 2869: Residues from the production of hexachlorophenol, trichlorophenol, and 2, 4, 5 - T (O)

(37) 2869: Heavy ends from distillation of vinyl chloride in production of vinyl chloride from ethylene dichloride (O)

(38) 2869: Heavy ends from distillation of ethylene dichloride in vinyl chloride production (O)

DRAFT

(39) 2869: Heavy ends or distillation residues from carbon tetrachloride fractionation tower (O)

(40) 2869: Heavy ends from distillation of ethylene dichloride in ethylene dichloride production (O)

(41) 2869: Purification column wastes from production of nitrobenzene (O)

(42) 2869: Still bottoms from production of furfural (O)

(43) 2869: Spent catalyst from fluorocarbon production (T, O)

(44) 2869: Centrifuge residue from toluene diisocyanate production (O)

(45) 2869: Lead slag from lead alkyl production (T)

(46) 2869: Stripping still tails from production of methyl ethyl pyridines (I, O)

(47) 2869: Still bottoms from aniline production (O)

(48) 2869: Aqueous effluent from scrubbing of spent acid in nitrobenzene production (O)

(49) 2869: Bottom stream from quench column in acrylonitrile production (O)

(50) 2869: Bottom stream from wastewater stripper in production of acrylonitrile (O)

(51) 2869: Still bottoms from final purification of acrylonitrile (O, G)

(52) 2869: Solid waste discharge from ion exchange column in production of acrylonitrile (O, G)

(53) 2869: Waste stream from purification of HCN in production of acrylonitrile (O, G)

(54) 2869: Waste stream (column bottoms) from acetonitrile purification in production of acrylonitrile (O)

(55) 2869: Wastewater treatment sludges from the production of aldrin, dieldrin, chlordane, toxaphene, disulfoton, malathion, phorate, carbaryl, pentadiene, trifluralin, alachlor, methyl parathion, vernolate, methomyl, carbofuran, captan, creosote, dithiocarbamates, pentachlorophenol, bromacil, diuron, p-dichlorobenzene, and chloroxuron (O, G)

(56) 2869: Wastewater from oxidation of aldrin solution in production of dieldrin (O, G)

(57) 2869: Wastewater from extraction of dieldrin solution in production of dieldrin (O, G)

(58) 2869: Wastewater and scrub water from chlorination of cyclopentadiene in production of chlordane (O, G)

(59) 2869: Filter solids from filtration of hexachlorocyclopentadiene in production of chlordane (O, G)

(60) 2869: Filter cake from filtration of toxaphene solution in production of toxaphene (O, G)

(61) 2869: Unrecovered triester from production of disulfoton (O, G)

(62) 2869: Still bottoms from toluene reclamation distillation in production of disulfoton (O, G)

(63) 2869: Filter cakes from filtration of dimethylphosphorothion and DMTA in production of malathion (O, G)

(64) 2869: Liquid wastes from washing and stripping in production of malathion (O, G)

(65) 2869: Liquid and solid wastes from the washing, stripping, and filtering of phorate in phorate production (O, G)

DRAFT

(66) 2869: Filter cake from the filtration of diethylphosphorodithoric acid in the production of phorate (O, G)
(67) 2869: Heavy ends and distillation residues from production of carbaryl (O, G)
(68) 2869: 2, 6-D waste by-product from production of 2, 4-D (O, G)
(69) 2869: Heavy ends or distillation residues from distillation of tetrachlorobenzene in production of 2, 4, 5-T (O, G)
(70) 2869: Scrubber and filter wastes from production of atrazine (O, G)
(71) 2869: Filter cake from production of pyrethrins (O)
(72) 2869: Filter cake from production of diazinon (O, G)
(73) 2869: By-product salts in production of MSMA (O)
(74) 2869: By-product salts in production of cacodylic acid (T)
(75) 2869: Tars from manufacture of bicycloheptadiene and cyclopentadiene (O, G)
(76) 2869: Still bottoms from the production of pentachloronitrobenzene (T, O, G)
(77) 2869: Waste from the manufacture of dibromochloropropane (DBCP) (O)
(78) 2869: Spent catalyst from hydrochlorinator reactor in the production of 1, 1, 1 - trichloroethane (O, G)
(79) 2869: Waste from the product steam stripper in the production of 1, 1, 1-trichloroethane (O, G)
(80) 2869: Process clean out sludges from the production of 1, 1, 1 - trichloroethane (O, G)
(81) 2869: Waste from the neutralization of spent hydrogen fluoride in the production of fluoromethanes (O, G)
(82) 2869: Spent catalyst from the fluorination reactor in the production of fluoromethanes (R, O, G)
(83) 2869: Still bottoms from the purification of fluoromethanes in the production of fluoromethanes (O, G)
(84) 2869: Waste from caustic scrubbing of fluorocarbons in the production of fluoromethanes (O, G)
(85) 2869: Heavy ends and light ends from the production of methyl acrylate (O)
(86) 2869: Heavy ends and light ends from the production of ethyl acrylate (O)
(87) 2869: Distillation bottoms from the production of acetaldehyde from ethylene (O)
(88) 2869: Heavy tars from the production of phenol/acetone from cumene (O)
(89) 2869: Distillation residues from the production of phthalic anhydride from naphthalene (O)
(90) 2869: Heavy ends from the production of glycerine from allyl chloride (O, G)
(91) 2869: Light ends from the distillation of acetaldehyde in the production of acetic anhydride (I)
(92) 2869: Heavy ends from the distillation of acetic anhydride in the production of acetic anhydride (I)
(93) 2890: Sludges, wastes from tub washer (Ink Formulation) (T, C, O)
(94) 2892: Wastewater treatment sludges from explosives, propellants and initiating compounds manufacture (C, T, R, I)

DRAFT

(95) 2892: Wastes recovered from acid vapor scrubber stream in the production of RDX/HMX (O, R, I)
(96) 2892: Catch basin materials in RDX/HMX production (C)
(97) 2892: Spent carbon columns used in treatment of wastewater —LAP operations (R)
(98) 2892: Wastewater treatment sludges from production of initiating compounds (T)
(99) 2892: Red water and pink water from TNT production (O)
(100) 2893: Wash water from printing ink equipment cleaning (T, O, G)
(101) 2911: Petroleum refining, high octane production neutralization HF alkylation sludge (T, O, G)
(102) 2911: Petroleum refining DAF sludge (T, I, O)
(103) 2911: Petroleum refining kerosene filter cakes (T, O, G)
(104) 2911: Petroleum refining lube oil filtration clays (T, O, G)
(105) 2911: Petroleum refining - slop oil emulsion solids (T, I, O)
(106) 2911: Petroleum refining exchange bundle cleaning solvent (T, O)
(107) 2911: API separator sludge (T, O)
(108) 3111: Leather tanning and finishing: wastewater treatment sludge from chrome tannery, beamhouse/tanhouse (T)
(109) 3111: Leather tanning and finishing: wastewater treatment screening from sheepskin tannery, split tannery, and retan/finishers (T)
(110) 3111: Trimmings and shavings from leather tanning and finishing/chrome, split, beam/tanhouse and retan/finishers (T)
(111) 3111: Wastewater treatment sludge from dehairing (R, T)
(112) 3312: Coking: Decanter tank tar (T, O)
Decanter Tank pitch sludge (T, O)
Oleum wash waste (C)
Caustic neutralization waste (C)
Ammonia still lime sludge (T)
(113) 3312: Iron Making: Ferromanganese blast furnace dust (T, R)
Ferromanganese blast furnace sludge (T)
Electric furnace dust and sludge (T)
(114) 3312: Steel Finishing: Alkaline cleaning waste (C)
Waste pickle liquor (C)
Cyanide-bearing wastes from electrolytic coating (T)
Chromate and dichromate wastes from chemical treatment (T)
Descaling acid (T, C)
(115) 3322: Lead/phenolic sand-casting waste from malleable iron foundries (T, O)
(116) 3331: Primary copper smelting and refining electric furnace slag, converter dust, acid plant sludge, and reverbatory dust (T)
(117) 3332: Primary Lead: Blast furnace dust (T)
Lagoon dredging from smelter (T)
(118) 3333: Zinc acid plant blowdown lime treatment: gypsum cake (acid cooling tower and neutral cooling tower) (T)
(119) 3333: Zinc production: Oxide furnace residue and acid plant sludge (T)
(120) 3333: Zinc anode sludge (T)

DRAFT

(121) 3339: Primary antimony - electrolytic sludge (T)
(122) 3339: Primary tungsten - digestion residues (T)
(123) 3339: Primary lead sinter dust scrubbing sludge (T)
(124) 3339: Ferromanganese emissions control: baghouse dusts and scrubwater solids (T)
(125) 3339: Ferrochrome silicon furnace emission control dust or sludge (T)
(126) 3339: Ferrochrome emissions control: furnace baghouse dust, and ESP dust (T)
(127) 3339: Primary antimony - pyrometallurgical blast furnace slag (T)
(128) 3341: Secondary lead - scrubber sludge from SO_2 emission control, soft lead production (T)
(129) 3341: Secondary lead - white metal production furnace dust (T)
(130) 3341: Secondary copper - pyrometallurgical blast furnace slag (T)
(131) 3341: Secondary copper - electrolytic refining wastewater treatment sludge (T)
(132) 3341: Secondary aluminum dross smelting - high salt slag plant residue (T)
(133) 3341: Zinc - cadmium metal reclamation, cadmium plant residue (T)
(134) 3344: Spent potliners (cathodes) from primary aluminum smelting (R)
(135) 3573: Waste acid solution from manufacture of electronic computing equipment (T, C)
(136) 3674-9: Cleaning, etching, and plating waste, tank bottom sediments, and metal treatment sludges from the manufacture of printed circuits (C, T, O)
(137) 3691: Lead acid storage battery production wastewater treatment sludges (T)
(138) 3691: Lead acid storage battery production clean-up wastes from cathode and anode paste production (T)
(139) 3691: Nickel cadmium battery production wastewater treatment sludges (T)
(140) 3691: Cadmium silver oxide battery production wastewater treatment sludge (T)
(141) 3691: Mercury cadmium battery production wastewater treatment sludges (T)
(142) 3692: Magnesium carbon battery production chromic acid wastewater treatment sludges (T)
(143) 7395: Waste ferricyanide bleach, dichromate bleach, color developer (Agfa), bleach fix (Agfa), and acid solution from photographic processing (C, R, T)
(144) 2295: Waste polyvinyl chloride (PVC) from the manufacture of coated fabrics (T)
(145) 2491: Bottom sediment sludge from wood treating process (O, G)
(146) 2653: Waste from equipment cleaning from flexoprinting in the manufacture of paperboard boxes (I, T, O, G)
(147) 2711: Waste from press clean-up in newspaper printing (T, O, I)
(148) 2822: Polyvinyl chloride sludge from the manufacture of polyvinyl chloride (O, G)

DRAFT

5.1. Applicability - The procedures of this Rule were developed to simulate, with an adequate margin of safety, natural leaching processes and shall be used for defining toxic hazardous waste as per Rule 2.5. These procedures are not intended to produce solutions to be used as a basis for engineering design of hazardous waste treatment, storage, or disposal facilities.

5.2. Simulated Leaching Test "A"

5.2.1. Sample - Obtain a representative sample of at least 100 grams of the waste to be tested. The sample shall be of the waste as it is generated, prior to any subsequent treatment or mingling with other wastes or materials.

5.2.2. Solid/Liquid Separation - Separate the sample into its component solid and liquid phases using either the pressure filtration method or the centrifugation method described below:

A. Pressure Filtration Method

1. Equipment: 142mm pressurizable filter holder equipped with a 1.5 liter reservoir.

2. Procedure

a. Using the filter holder place a 0.45 micron filter membrane on the support screen. On top of the membrane (upstream) place a prefilter. Secure filter holder as directed in manufacturer's instructions.

b. Fill the reservoir with the sample to be separated, pressurize to no more than 75 psi (7kg/cm^2), and filter until no significant amount of fluid (less than 5ml) is released during a 30-minute period.

c. After liquid flow stops, depressurize and open the top of the reservoir, invert the filter unit, replace filter pads as in procedure 2.a. above, and resume filtering. Save pads for later use. Repeat this step until no more fluid can be removed from the waste at a pressure of 75 psi.

d. Take the solid material remaining, and any pads used in filtration, and proceed to 5.2.3. Subtract tare weights of filter pads in calculating the amount of soild component of the sample. Reserve the liquid fraction under refrigeration at 1-5°C (34-41°F) for later use.

B. Centrifugation Method

1. Equipment: Centrifuge equipped with a rotor for 600ml to one liter containers. Explosion proof equipment is recommended for wastes containing flammable materials.

DRAFT

2. Procedure

a. Centrifuge sample for 30 minutes at 2300 rpm. Hold temperature at 20-40°C (68-104°F).

b. Using a ruler, measure the size of the liquid and solid layers to the nearest millimeter (0.04 in.). Calculate the liquid to solid ratio.

c. Repeat a. and b. above until the liquid : solid ratios calculated after two consecutive centrifugations are within 3 percent.

d. Decant or siphon off the layers and proceed with the solid portion to 5.2.3. Reserve the liquid phase under refrigeration at 1-5°C (34-41°F) for later use.

5.2.3. Mechanical Reduction - Take the solid portion obtained from 5.2.2. above and prepare it for extraction by grinding it to pass through a 9.5mm (3/8 in.) standard sieve. If the material cannot be readily reduced to this particle size (e.g., cannot be ground using a common mortar and pestle), then it may instead be subjected to the following structual integrity test developed to represent possible handling and disposal stresses:

A. Equipment: Compaction tester, as shown in Figure 1, having a 1.25-inch diameter hammer weighing 0.73 pounds and having a free fall of 6 inches (one suitable device is the Associated Design and Manufacturing Company, Alexandria, VA 22314, catalogue no. 125).

B. Procedure

1. Fill the sample holder with the material to be tested. If the waste sample is a monolithic block, then cut out a representative sample from the block having the dimensions of a 1.3-inch diameter by 2.8-inch long cyclinder.

2. Place the sample holder into the Compaction Tester and apply 15 hammer blows (free drop) to the sample.

3. Remove the now compacted sample from the sample holder and proceed with it to 5.2.4.

5.2.4. Extraction

A. Equipment: An extractor consisting of a container of adequate size coupled with a device to assure continuous mixing is necessary. A suitable extractor will prevent stratification of sample and extraction fluid, insure that all sample surfaces are continuously brought into contact with well-mixed extraction fluid, eliminate or minimize waste particle or container abrasion, and minimize incorporation of air. A polyethylene container should normally be used, but a glass container should be used when the plastic may affect the results (as in extracting for organics).

DRAFT

Figure 1

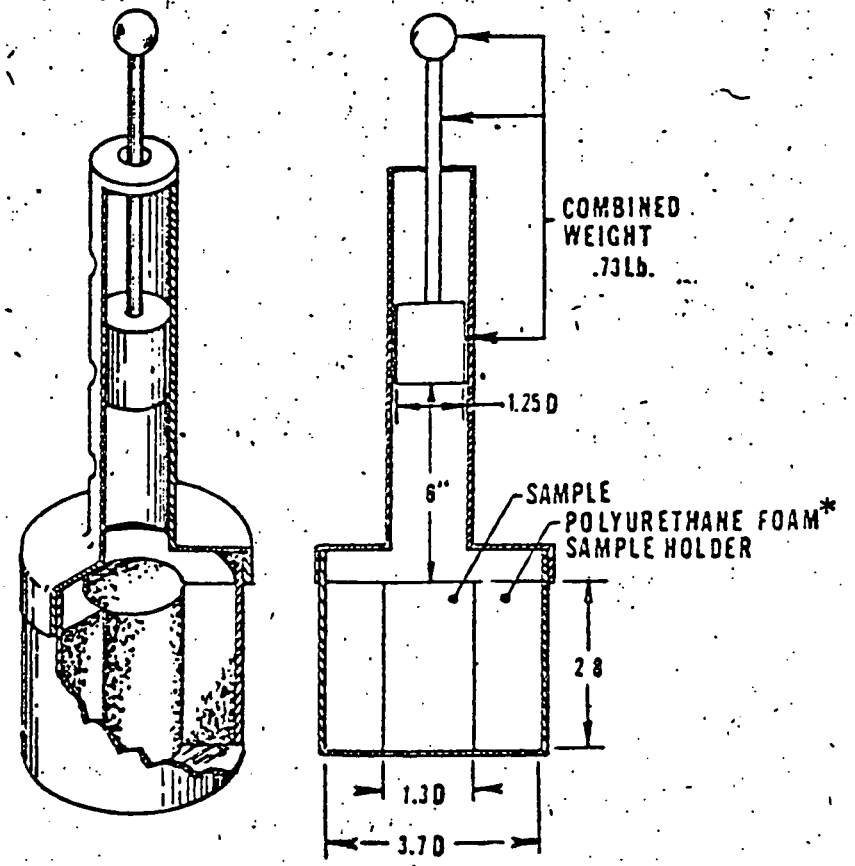

COMPACTION TESTER

*Polyurethane foam shall conform to requirements for Grade 21, performance Grade AD or BD, established in ASTM Standard D3453.

DRAFT

B. Procedure

1. Take the ground or compacted material from 5.2.3., weigh it, and place it in the extractor.

2. Add to the extractor a weight of deionized water equal to 16 times the weight of solid material added to the extractor. This weight of water includes any water used in transferring the solid material to the extractor.

3. Begin agitation and continue for 24$\pm$ 0.5 hours.

4. Adjust the pH of the solution to 5.0$\pm$ 0.2 using 0.5N acetic acid and maintain that pH throughout the 24-hour extraction period. However, do not add more than 4ml of acid for each gram of solid. Once 4ml of acid per gram has been added, complete the 24-hour extraction without adding additional acid. It is recommended that an automatic pH controlling device be uilized, but if such a device is not available the following manual procedure can be employed:

   a. Calibrate pH meter in accordance with manufacturer's specifications.

   b. Add 0.5N acetic acid and adjust pH of solution to 5.0$\pm$ 0.2. If more than 4ml of acid for each gram of solid is required to hold the pH at 5, then once 4ml of acid per gram has been added, complete the 24-hour extraction without using any additional acid.

   c. Manually adjust pH of solution at 15, 30, and 60 minute intervals, moving to the next longer interval if the pH did not have to be adjusted more than 0.5 pH units since the previous adjustment.

   d. Continue adjustment procedure for a period of not less than 6 hours.

   e. Final pH after a 24-hour period must be within the range 4.9-5.2, unless 4ml of acid per gram of solid has already been added.

   f. If the conditions of e. above are not met, continue pH adjustment at approximately one-hour invervals for a period of not less than 4 hours.

5. Maintain the solution at 20-40°C (68-104°F) during the 24-hour extraction period.

6. At the end of the 24-hour extraction period, separate the material in the extractor into solid and liquid phases as in 5.2.2. Discard the solid portion.

DRAFT

7. Adjust the volume of the resulting liquid phase with deionized water so that its volume in milliliters is equal to 20 times the weight in grams of the initial quantity of solid material placed in the extractor (e.g., for an initial weight of one gram, dilute to 20ml).

8. Combine the diluted liquid solution with the original liquid phase from 5.2.2.

5.2.5. Results - The combined liquid from 5.2.4.B.8. above, and any precipitate which may later form, is the Simulated Leachate to be used for analysis. If analysis is not begun immediately, transfer the leachate to sample bottles of a size such that the entire bottle is filled. Close and label. Preserve the leachate in a manner consistent with the chemical analyses to be performed. Analyze as required.

5.3 Simulated Leaching Test "B" - The procedures for this test are identical with those of 5.2. above except that 5.2.4.B.4. is omitted.

APPENDIX B

CHANNEL AND DIFFUSER SIMULATOR

APPENDIX B

TABLE OF CONTENTS

		Page
B.1.	Introduction	B1
B.2.	Design Philosophy	B1
B.3.	Design Basis	B2
B.4.	Conceptual CDS Design	B4
B.4.1.	Optional Designs	B4
B.4.1.1.	Converging Duct Friction Choked	B4
B.4.1.2.	Converging Nozzle with Barrel	B5
B.4.1.3.	Converging-Diverging Nozzle	B7
B.4.1.4.	Converging-Diverging Nozzle with Barrel (Circular)	B7
B.4.1.5.	Converging-Diverging Nozzle with Barrel (Rectangular)	B7
B.5.	Final CDS Design	B8
B.5.1.	Design Methods	B10
B.6.	CDS Construction	B22
B.6.1.	Nozzle Construction	B22
B.6.2.	Barrel Construction	B29
B.7.	Possible Performance Deviations and Solution Options	B35
B.8.	Instrumentation and Controls	B37
B.9.	Design Background	
	Influence Coefficient Method for Calculation of Gas Properties in a Duct	B38
B.10.	CDS Model Test	B47
	References	B51

APPENDIX B

CHANNEL AND DIFFUSER SIMULATOR

B.1 Introduction

This appendix describes the design philosophy, basis, description and operation of the HRSR channel and diffuser simulator (CDS). The CDS is included in the Preliminary Design Report (PDR) since the separate MHD Channel and Diffuser Report, deliverable 5-8, was eliminated by mutual agreement. It is presented in an appendix to emphasize that the CDS is not an actual HRSR component by the fact that it is not to be further developed. It contains no test instrumentation and is only used to alter the gas from the combustor to obtain the desired gas conditions. However, it is important that the CDS operates as intended so that reliable test data can be obtained.

B.2 Design Philosophy

The CDS is used to lower the gas temperature and pressure and establish a gas exit velocity that simulates the exit conditions of an actual MHD channel to obtain an acceptable data base. Minimizing the size and complexity was desirable in an effort to minimize material and fabrication costs and prevent unnecessary development work. The effort was directed at obtaining a device that performs as required for this one time application.

To accomplish the above goals, technology from the aerospace industry was used. This industry is familiar with similar temperatures,

pressure, heat fluxes and material problems that are present in this situation. Several optional configurations were evaluated and one was chosen as best fulfilling the necessary requirements.

In addition to adapting rocket technology, the CDS design incorporates some aspects of current MHD generator channel design. This reduced new developmental work and utilizes a method already proven under actual conditions. In fact, the CDS design is based on MHD generator design wherever possible.

B.3. Design Basis

The objective of the CDS is to lower the temperature and pressure of the combustor exit gas and establish the desired gas velocity entering the HRSR system. The following is the basis used in the design of the CDS. The combustor exit conditions were defined as follows by the U.S. Department of Energy:

Inlet Conditions:

Temperature:	4250F
Pressure:	6 atmospheres
Gas Velocity	530 ft/sec

Composition	lb/sec	wt %
Ar	.0781	0.8387
AlO_2	.0171	0.1836
CO_2	3.7026	39.7603
Ca	.0032	0.0344
Fe	.0124	0.1332

(Continuation)

Composition	lb/sec	wt %
H_2	.1038	1.1147
K	.1123	1.2059
N_2	4.6064	49.4658
O_2	.5971	6.4119
P_2	.0001	0.0010
S_2	.0455	0.4886
SiO_2	.0337	0.3619
Total	9.3123	100.0000

The simulated exit conditions were also specified by the DOE as follows.

Desired Exit Conditions:

Temperature: 3800F

Pressure: 1 atmosphere

Gas Velocity: 300 ft/sec

There are two reasons why a high temperature and pressure gas is generated only to be reduced in temperature and pressure before entering the HRSR system. Firstly, by using a MHD combustor from the DOE combustor development program eliminates the necessity of designing a hot gas source to produce the gas. Secondly, it is not known whether a gas produced at the lower conditions is compositionally representative of a gas that is produced at higher conditions and cooled. The procedure of cooling the hotter gas simulates the procedure that actual MHD gases will follow.

B.4 Conceptual CDS Design

In order to produce the desired gas conditions and minimize the size and complexity, the following details were incorporated into the conceptual CDS design. The pressure is dissipated by the formation of a shock wave. This is preferable to using friction to dissipate pressure due to the low confidence of determining an accurate friction factor for the conditions present. In order for the CDS to pass a specified flow, a choke throat was also part of the CDS design concept. This section presents the design options that were considered.

B.4.1. Optional Designs

Examination of the available literature provided several possible options for the CDS design. These options are listed below.

- Converging Duct Friction Choked
- Converging Nozzle with Barrel
- Converging-Diverging Nozzle
- Converging-Diverging Nozzle with Barrel (Circular)
- Converging-Diverging Nozzle with Barrel (Rectangular)
- Converging-Diverging Nozzle with Stepped Barrel

B.4.1.1. Converging Duct Friction Choked

The scheme of this configuration, Figure 1a, is to put the flow through a converging duct and dissipating the pressure by friction between the gas and the walls. The main problem with this configuration is the dependence of the length on an estimated friction factor. Slag thickness and roughness could vary with temperature, thus causing an

uncontrollable, variable friction factor.

By the time enough friction is applied by increasing the duct length, the gas temperature would be much lower than required. In addition, the duct length would prohibit it from easily occupying the site. Its length would also require cooling which would make its cooling system bulky if not complex.

B.4.1.2. Converging Nozzle with Barrel

The objective of this configuration, Figure 1b, is to pass the gas through a choked converging nozzle which produces a shock wave at the nozzle exit, thereby reducing the pressure by the formation of the shock. The flow then enters an adjacent barrel which cools the gas and establishes an exit velocity by the proper sizing of the exit opening.

The difficulty of this scheme is that the flow from the nozzle exit diverges very slowly and requires a long barrel so that the flow will reattach in the barrel and not in the furnace. High heat fluxes at the reattachment point make it imperative that reattachment occur in the barrel where it would be designed to handle high heat fluxes. The furnace could be designed to handle the heat flux, but this would add to both the complexity of the design and the cost. Also, such a situation would not simulate the operation in an actual MHD channel and furnace configuration where the MHD channel has a diffuser and there are no reattachment problems in the furnace.

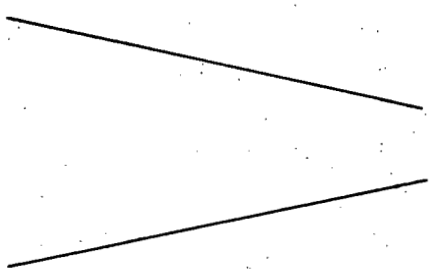

1a. Converging Duct
Friction Choked

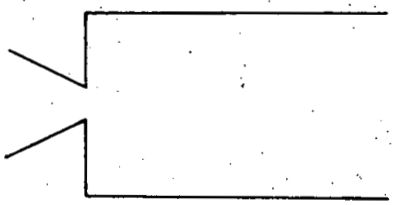

1b. Converging Nozzle
with Barrel

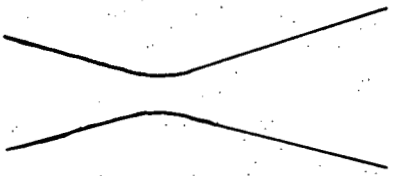

1c. Converging - Diverging
Nozzle

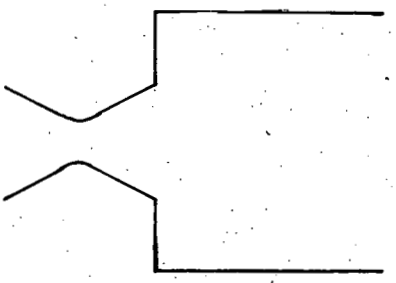

1d. Converging Diverging
Nozzle with Barrel

Figure 1 Four Conceptual Geometries

B.4.1.3. Converging-Diverging Nozzle

The flow through a converging-diverging nozzle, Figure 1c, is choked at the throat and is at sonic velocity. The velocity increases until at the end of nozzle a vertical shock is established.

The problem with this scheme is that the gas does not cool to the desired temperature. This scheme also has the problem the converging nozzle has in that the gas, after leaving the nozzle, may reattach in the furnace after the shock.

B.4.1.4. Converging-Diverging Nozzle with Barrel (Circular)

The converging-diverging nozzle with barrel, Figure 1d, offers a good combination to obtain the desired conditions. The nozzle can be designed to dissipate the pressure by producing a shock and shaped so that it will induce the flow to attach quickly in the barrel thereby minimizing the total CDS length. Both the nozzle and barrel offer cooling surface to fix the temperature and the barrel is sized to stabilize the gas flow and set the gas velocity.

A circular nozzle and barrel provides symmetrical flow, but presents fabrication problems. It is possible to cool a circular CDS, but the fabrication would itself be a major development.

B.4.1.5. Converging-Diverging Nozzle with Barrel (Rectangular)

Due to fabrication problems a circular barrel is undesirable, since it is difficult to build in the required cooling circuitry. Therefore it was necessary to change the barrel to a rectangular configuration. By

using a rectangular nozzle it was possible to adapt construction and fabrication techniques already used for MHD channels that have proven under actual conditions that they are capable of surviving. There are particular requirements on the CDS however that must be met. It is imperative that the outlet velocity be uniform over the outlet area, thus flow separation must be avoided in the CDS nozzle and barrel.

The CDS has a very unique function in that it must be an inefficient design, i.e., it must dissipate five atmospheres of pressure and cool the gas stream from 4250°F to 3800°F. It must do this with a minimum of perturbation on the flow. A shock wave must be established in the flow and the flow must stay attached to the walls. Since the combustor cannot be overpressured to establish the flow in the CDS its entire design must be directed towards minimizing flow separation without pressure overshoot. Therefore the CDS design will consist of converging-diverging nozzle with a retangular barrel cross section which has stepped area changes.

B.5 Final CDS Design

The final aerodynamic design contours for the CDS are shown in Figure 2a and 2b. The sides of the nozzle are planar and the contoured surfaces are only on the top and bottom of the nozzle. The barrel is rectangular and has two steps on the top and bottom with one step on the sides followed by an angular expansion of the sides to the final 19 inch width. The final two feet of the barrel consists of a constant area. This barrel design should keep the flow attached throughout and

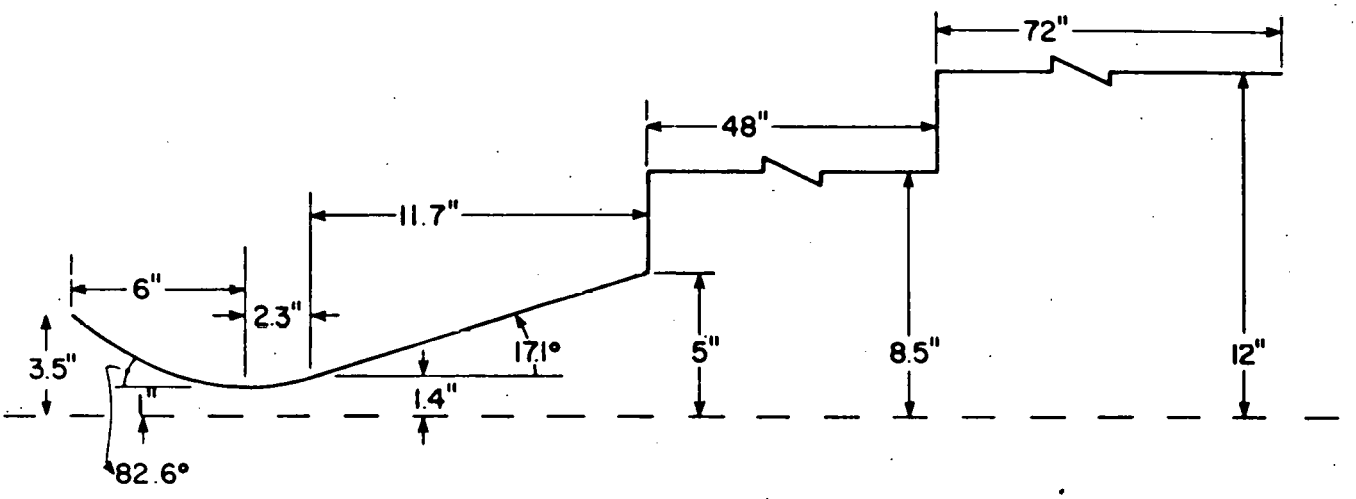

Figure 2a. Nozzle Geometry, Side View
(All Dimensions are in Inches)

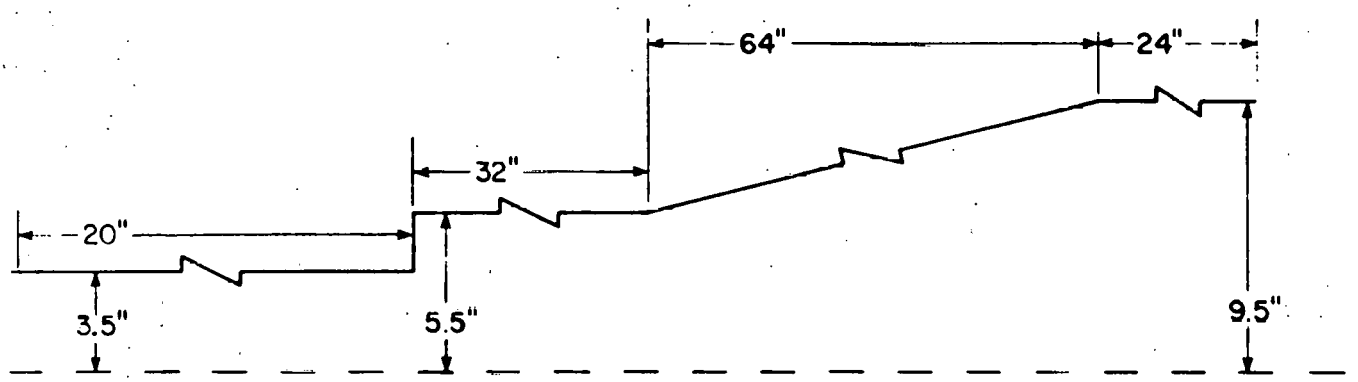

Figure 2b. Nozzle Geometry, Top View
(All Dimensions are in Inches)

provide for uniform flow at the exit.

Notice, the maximum expansion angle in the nozzle is 17.1 degrees. This was chosen for a convenient nozzle length of 20 inches and an expansion area ratio of 5 to 1. Preliminary cold flow tests at MSU were used in arriving at this design and its performance will be verified by detailed tests before the final design is completed. The flow should attach to the walls and be stable at pressures as low as 5 atmospheres and, of course, above that pressure no problems are anticipated whatsoever. An average velocity of 300 ft/sec is obtained at the barrel exit and the length of the barrel is sufficient to cool the gases to the desired exit temperature of 3800°F.

B.5.1. Design Methods

The gas was assumed to be perfect with constant specific heats, C_p and C_v. This is in accordance with usually accepted practices of rocket propulsion design (Sutton [9] or Hill and Peterson [10]). Values of C_p, C_V, molecular weight (M_W) and γ (ratio of specific heats) were taken as constant and obtained from the thermochemical computer code CEC-76 as developed by Gordon and McBride [11]. A matrix of pressure/temperature points was generated and effective values of C_p, C_V, M_W and γ were determined. The parameters used were:

C_p = 335.5 ft-lb_f/lb_m ^{o}R

C_V = 284.02 ft-lb_f/lb_m ^{o}R

M_W = 30.2 lb_m/lb_mmole

(Continuation)

$\gamma = 1.18$ ($\gamma = C_p/C_V$)

Pr = 0.63 Prandtl Number, $Pr = \frac{C_p \mu}{\lambda}$

Molecular viscosity, μ, was assumed to obey the same form as Sunderland's Law where the leading constant was adjusted to fit the values from the computer program TRAN-72[12]. The molecular thermal conductivity, μ, was computed from the constant Prandtl number assumed.

The gas properties mentioned above formed the input information for the gas dynamic calculations. The CDS was designed on the basis of a cooled copper wall construction with heat transfer by convection and radiation. From a gas dynamics viewpoint, heat transfer (stagnation temperature loss) must be considered as well as area change and friction effects. A one dimensional flow assumption has been assumed for the design (fluid properties are uniform over any cross section). The method of influence coefficients as presented by Shapiro [13] and further developed by Beans [14,15] and Zucrow and Hoffman [16] was chosen as an appropriate method for the inviscid gas dynamic computations. Details are presented in Section B.9. The result of the analysis gave the required throat height to pass the mass flow, the exit height required to locate a normal shock wave in the nozzle exit plane, and distributions of temperature, pressure and Mach numbers. The dimensions were already presented in Figure 2a and 2b.

It has been stated the theory of supersonic nozzle design is well

known and an adequate design can be obtained if proper analytical methods are used. This is true if we were designing a supersonic nozzle for a rocket engine where high efficiency is desired. However, to reiterate what has been stated above, the purpose here is to dissipate 6 atmospheres and 450°F in the CDS and do it quietly and with effectiveness. Therefore, a quasi-one dimensional flow analysis will give the proper flow areas and put bounds on the CDS design. A cold flow model test will determine whether or not the system will perform properly for the full scale CDS.

The pressure distribution down the nozzle is shown in Figure 3. The pressure is non-dimensionalized on the basis of P_{oi}, the upstream total pressure, which is nominally 6.0 atmospheres. The pressure decreases throughout the nozzle as the flow is accelerated from subsonic to sonic to supersonic velocities. The flow overexpands in the nozzle and for the design conditions is re-compressed by the normal shock to a nominal 1.0 atmosphere pressure. The nearly zero pressure gradient near the x = 0 location (throat) is the result of the 1.0" long constant height segment located at the throat (minimum area or minimum height). Figure 4 shows the pressure gradient down the nozzle.

Figure 5 represents the temperature and Mach number distributions down the nozzle. The Mach number, at the nozzle exit, decreases across an oblique shock wave. These calculations assume no extensive separation prior to the nozzle exit where separation is geometrically induced. The decrease in stagnation temperature used for the influence coefficients gas dynamics analysis was consistent with the heat transfer anticipated.

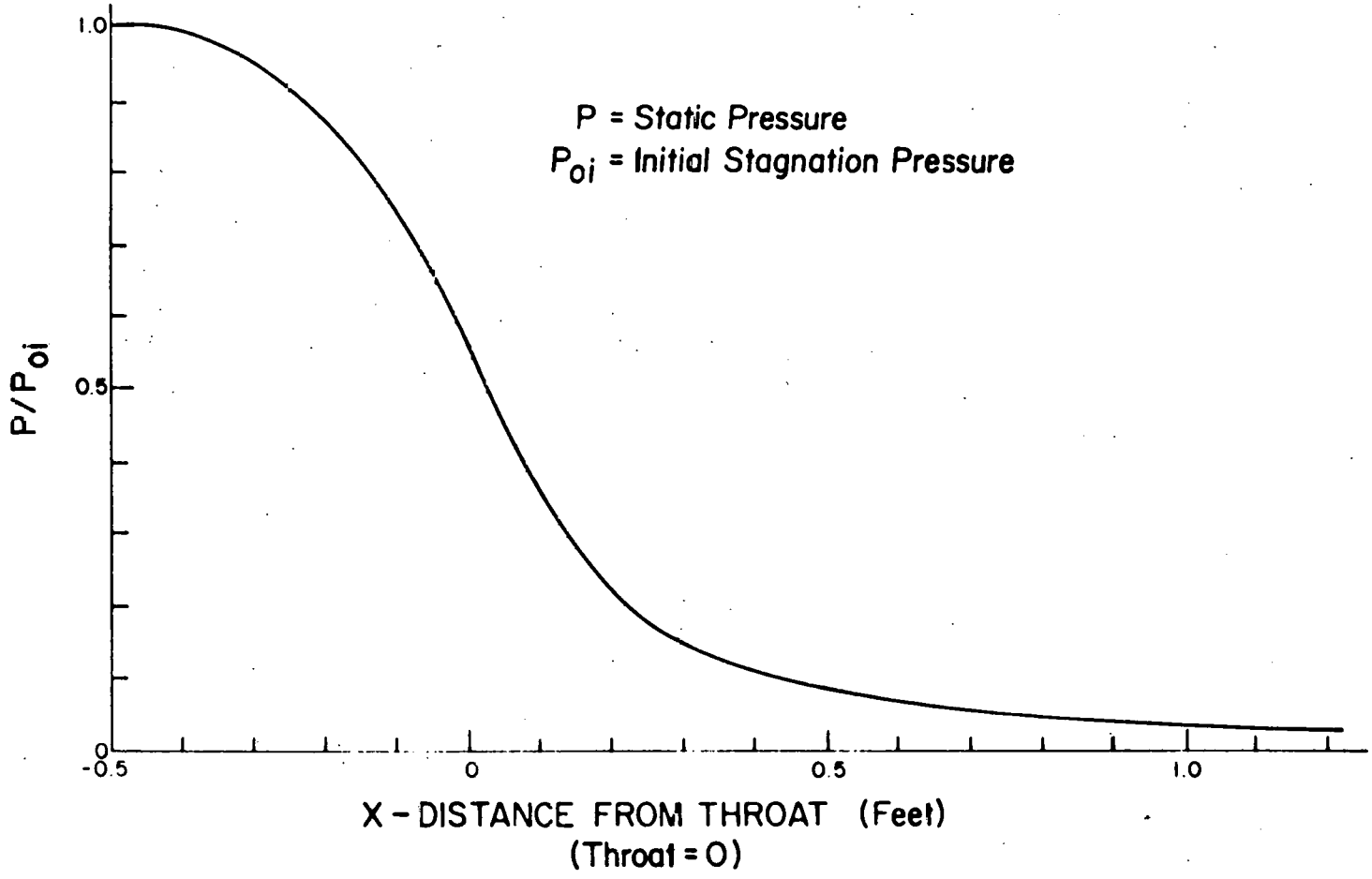

Figure 3 Pressure Distribution in Nozzle

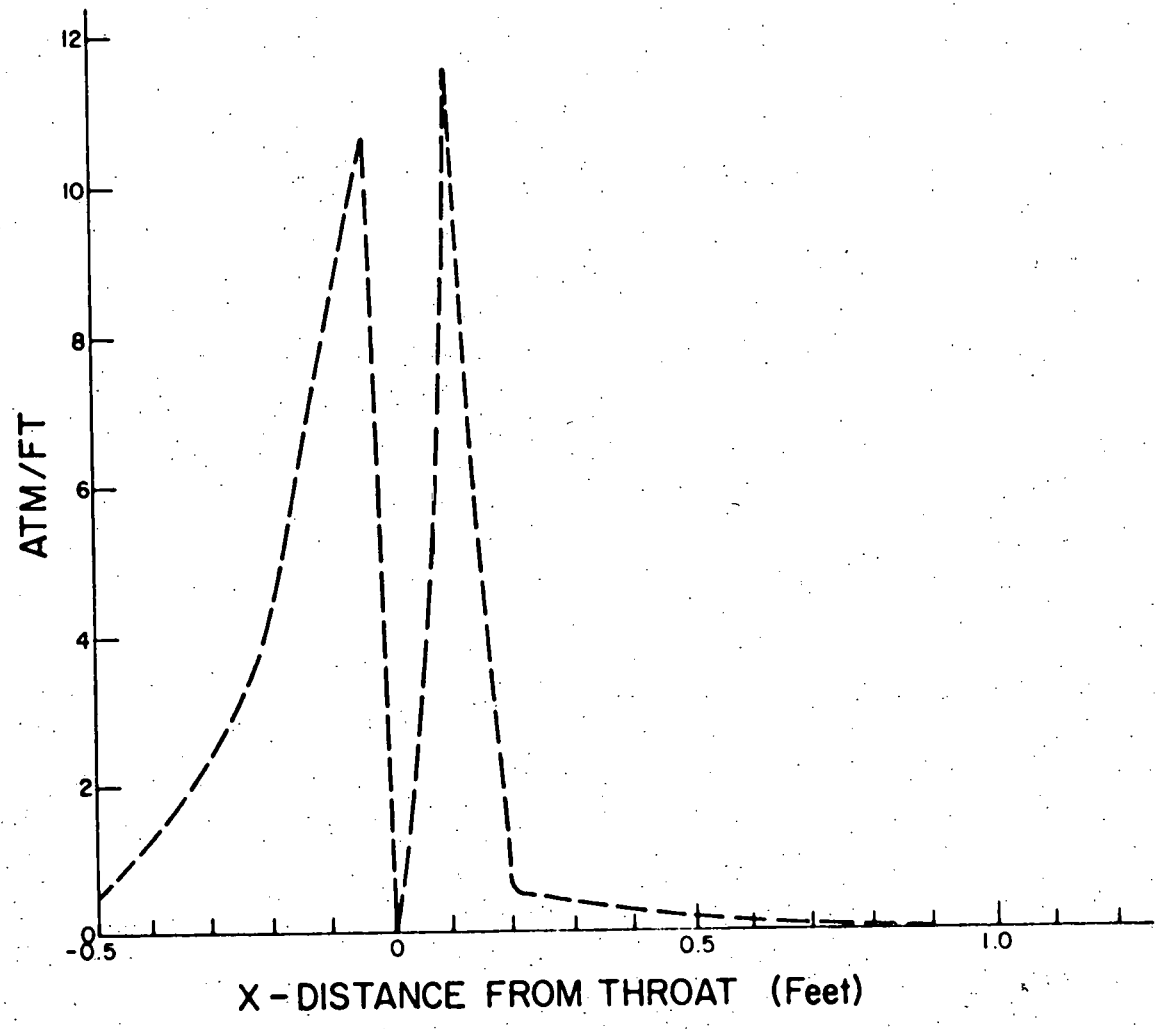

Figure 4 Pressure Gradient in Nozzle

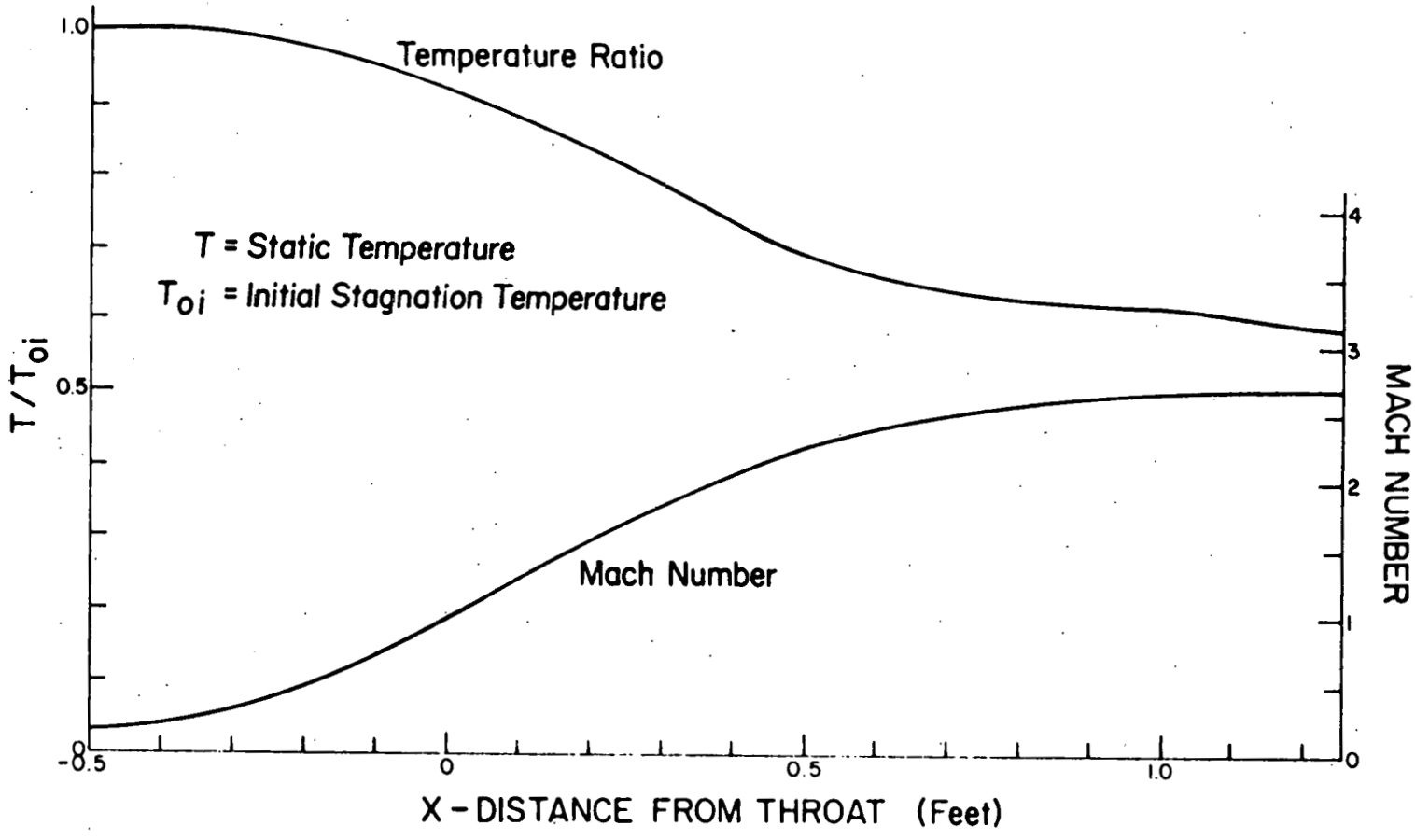

Figure 5 Temperature Ratio and Mach Number Distribution in Nozzle

The heat fluxes were evaluated by considering the convection contribution as dominant over the radiative. This is representative of rocket technology and to the high degree of mixing present and the small radiating lengths present. A parabolic compressible turbulent boundary layer computer program was used to compute the convection heat flux distributions. This program used the approach of Adams [17] and has been extensively documented (Hodge [18,19], Adams and Hodge [20], Hodge and Adams [21]). This program is presented in more detail in Section B.9.

Convection heat flux distribution for the top and side wall of the nozzle are given in Figures 6 and 7. The wall temperature was assumed to be 820 R with the gas temperature taken from Figure 5. The slightly different values of the convective heat flux distribution for the top and side walls reflect the different surface lengths over which the boundary layer develops. As expected the maximum heat flux occurs at the throat where the mass velocity (lb/hr ft^2) is a maximum. The expansion down the diverging portion of the nozzle reduces the gas static temperature as well as the gas density and correspondingly the convective heat flux.

For many years the general enhancement of heat transfer in the neighborhood of a shock wave/boundary layer interaction has been recognized (Korkegi[22], Johnson and Kaufman [23]). The CDS at full load design conditions will have an oblique shock at the exit of the nozzle interacting with a turbulent boundary layer. Mathematically, the theor-

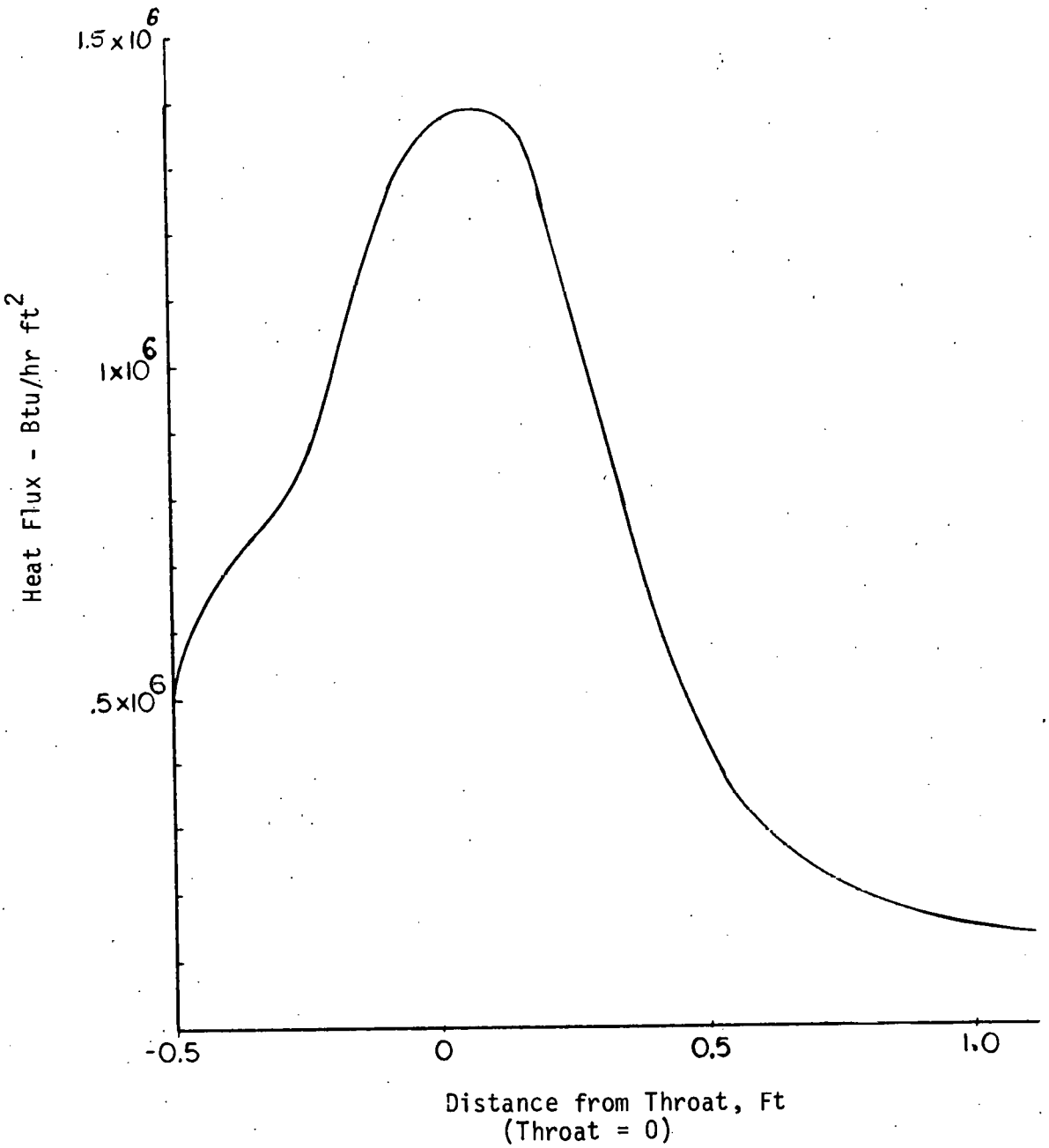

Figure 6 Convection Heat Flux,
Top Wall

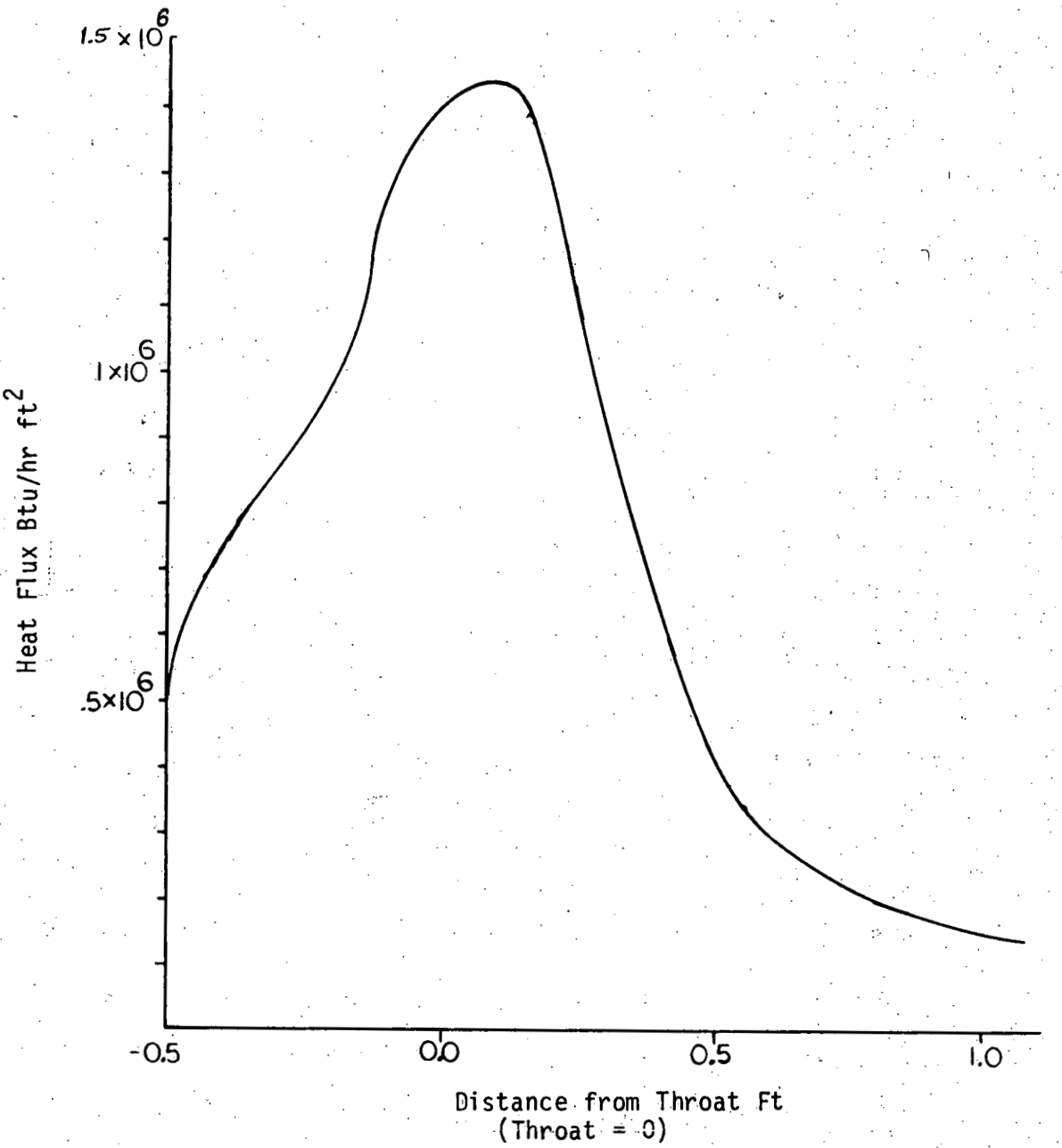

Figure 7 Convection Heat Flux - Sidewall

etical computation of the salient features of such an interaction is a Navier-Stokes problem in conjunction with a sophisticated turbulence model. Empirical correlations relating heat flux enhancements in turbulent boundary layer/shock wave interactions are the best available source for estimating such enhancements. The correlations of Johnson and Kaufman[23] relate the peak heating experiments as a function of the pressure ratio across the shock wave. The generally accepted correlation is

$$H_{pk} = (P)^{0.85}$$

where H_{pk} represents the ratio of the peak heat flux within the interaction to the normal heat flux without an interaction. The pressure ratio across the shock at the exit is approximately 5.0 which yields a H_{pk} of 3.93. This value is consistent with the conclusions of Korkegi[22]. Thus, the resulting convective peak heat flux is 500,000 Btu/hr/ft^2. Johnson and Kaufman[23] conclusions show that the maximum heat flux will occur at the throat; thus, the throat is the most critical area in terms of the
CDS cooling.

In addition to the convective heat load the large difference between the gas temperature and the wall temperature indicates that radiation may be significant. The radiative heat flux distribution down the nozzle was computed using the mean beam length approach of Hottel and Sarofim[26]. The mean beam length computational procedure is discussed in Section B.9. Because of approximations made in the mean beam length estimate, the computed radiative heat flux distribution for

the top and side walls are the same. This distribution is shown in Figure 8 at the same scale used for the convective heat fluxes of Figures 6 and 7. The rapid decrease in the radiative heat flux is caused by the decreasing gas static temperature and static pressure down the nozzle. A comparison of Figures 6, 7 and 8 verifies the assumption of the dominance of convective heat transfer in the converging-diverging nozzle.

Convective and radiative heat fluxes are also required for the design of the CDS barrel. The same approaches were used to estimate the heat fluxes in the barrel. The convective heat flux was estimated by applying the turbulent compressible boundary layer program for a zero pressure gradient. The convective heat flux distribution in the barrel, taken as zero until flow attachment occurs, decreases slightly until the exit is reached.

Near Attachment	65,880 Btu/hr ft^2
Near Exit	52,168 Btu/hr ft^2

Prior to attachment the only heat load felt by the barrel will be the radiative load.

Barrel End	29,523 Btu/hr ft^2
Barrel Side Walls	29,650 Btu/hr ft^2

When the flow is attached on either the barrel top, bottom or sides the radiative heat flux will remain near 29,650 Btu/hr ft^2. Because of the low velocities and pressure in the barrel the heat loads are generally much smaller than in the nozzle.

When attachment occurs, existing data indicates that a substantial

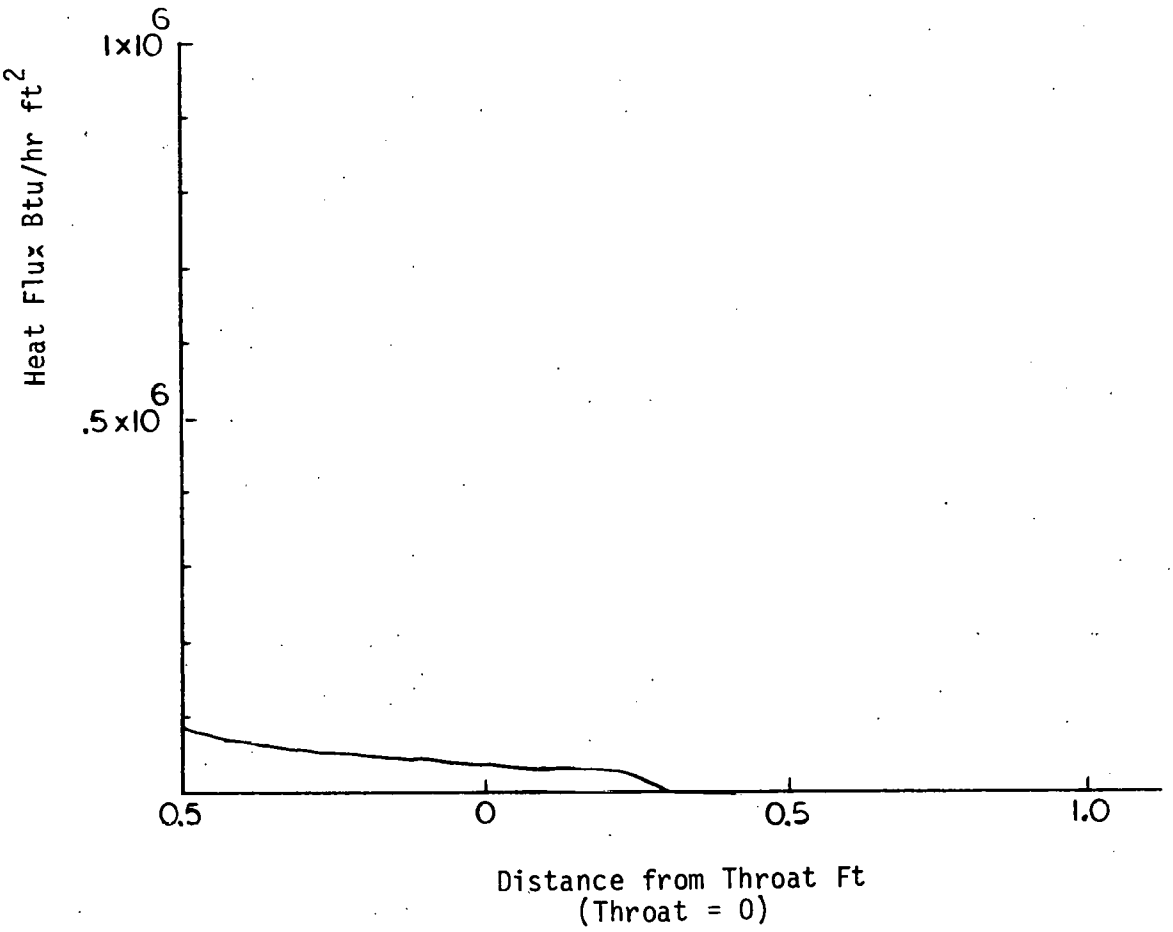

Figure 8 Nozzle Radiative Heat Flux

enhancement in heat flux may occur (Bushnell and Weinstein[8], Gerhart[27]). The data of Wrubal and Carlson[28] shows that a local enhancement greater than 4 is seldom attained. A worst case heat flux of 380,000 Btu/hr ft^2 was calculated, but for the sake of conservatism, an upset design heat flux of 500,000 Btu/hr ft^2 was chosen.

B.6. CDS Construction

Section B.5 presented the final aerodynamic design of the CDS. This section presents the construction of the CDS showing how the CDS is constructed including the incorporation of a cooling system for the nozzle and barrel.

B.6.1. Nozzle Construction

The nozzle design excluding the aerodynamic design and purpose, is not a new design. The same design is currently used in MHD channels. Figure 9 shows a typical plate section that the HRSR simulator is based on.

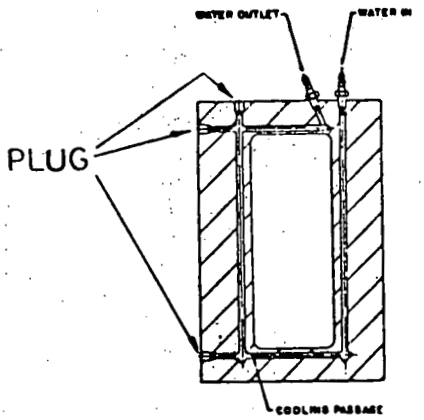

Figure 9 Typical Nozzle Plate

This section is a copper plate with a rectangular opening cut through it. The inside corners have been rounded to reduce stress concentrations. This type of section is used to form the entire HRSR nozzle. The cooling passages are formed by careful alignment of gun-drilled holes. Drill bit entrance holes are plugged and inlet and outlet connections are installed.

The nozzle consists of 10 plates of copper each with its own individual cooling circuits and internal geometry. The copper used in the nozzle and, in fact, the entire CDS is oxygen free copper. This was used based upon information received from UTSI. UTSI indicated that copper containing oxygen was more susceptible to failure.

The plate thicknesses in the nozzle have been chosen to complement the aerodynamic design and to minimize the number of plates. A thickness of 2" has been selected for the first three plates to make up the 6" converging section between the channel inlet and the choke throat. The fourth plate is 2.3" thick to accommodate the top and bottom contoured areas of the diverging throat section which dictates the flow aerodynamics of the compressed gas. Beyond this point, the top and bottom walls of the gas channel continue to diverge in a constant half angle of 17.1^{0}. Plate number 5 has a thickness of 1.7" so that the total length of 11.7" can be obtained for the planar diverging section if the remaining plates are all 2" thick. The 2" thickness was chosen since it is a commonly available thickness and easily fits into the dimensions of the nozzle. Figure 10 shows the sectional side view of the CDS nozzle. Figure 11 illustrates the front view of the nozzle.

Plates 3, 4 and 5 have 1/4" cooling passages while the remaining plates have 3/8" passages. The smaller diameter permits more holes to

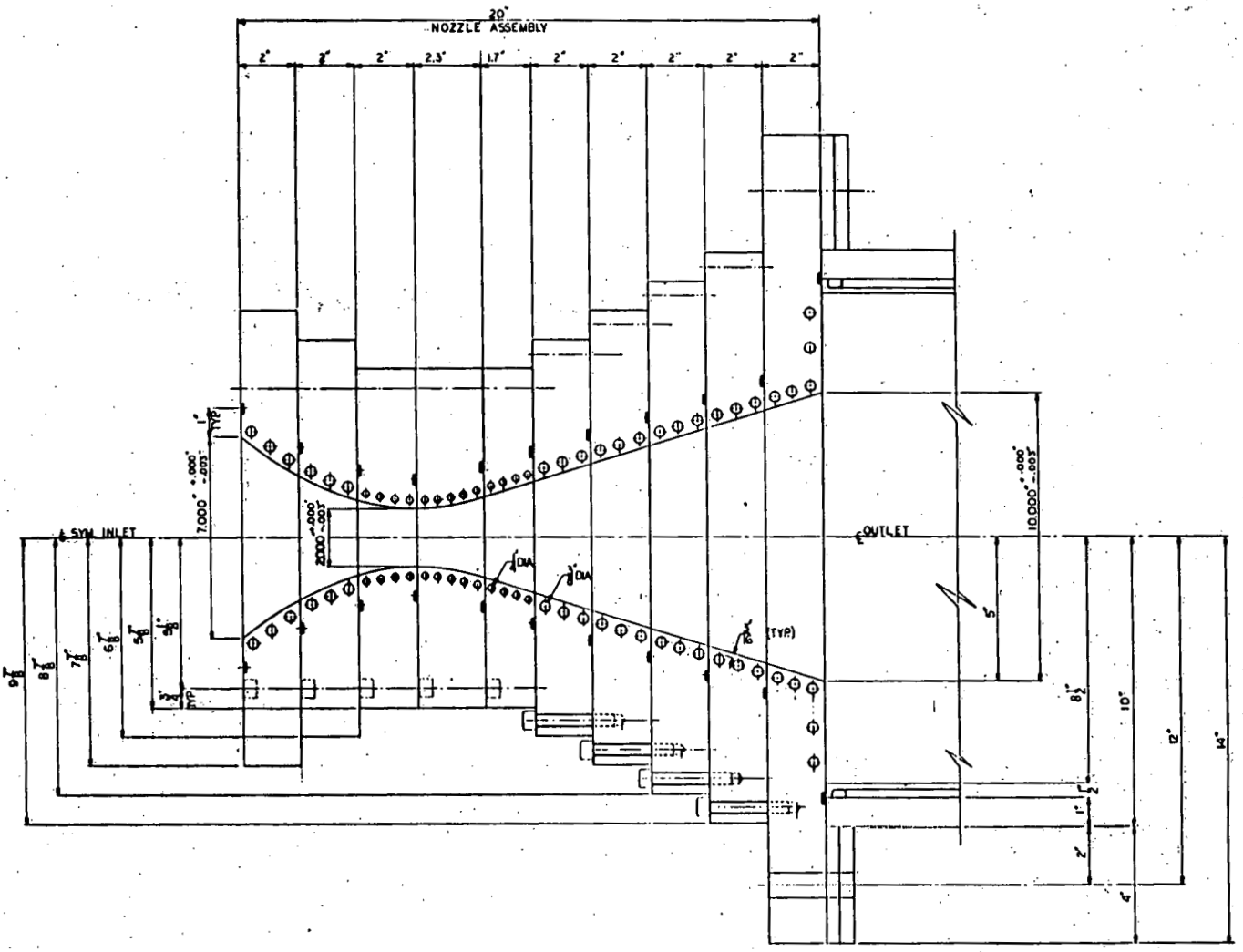

Figure 10 Sectional Sideview of CDS Nozzle

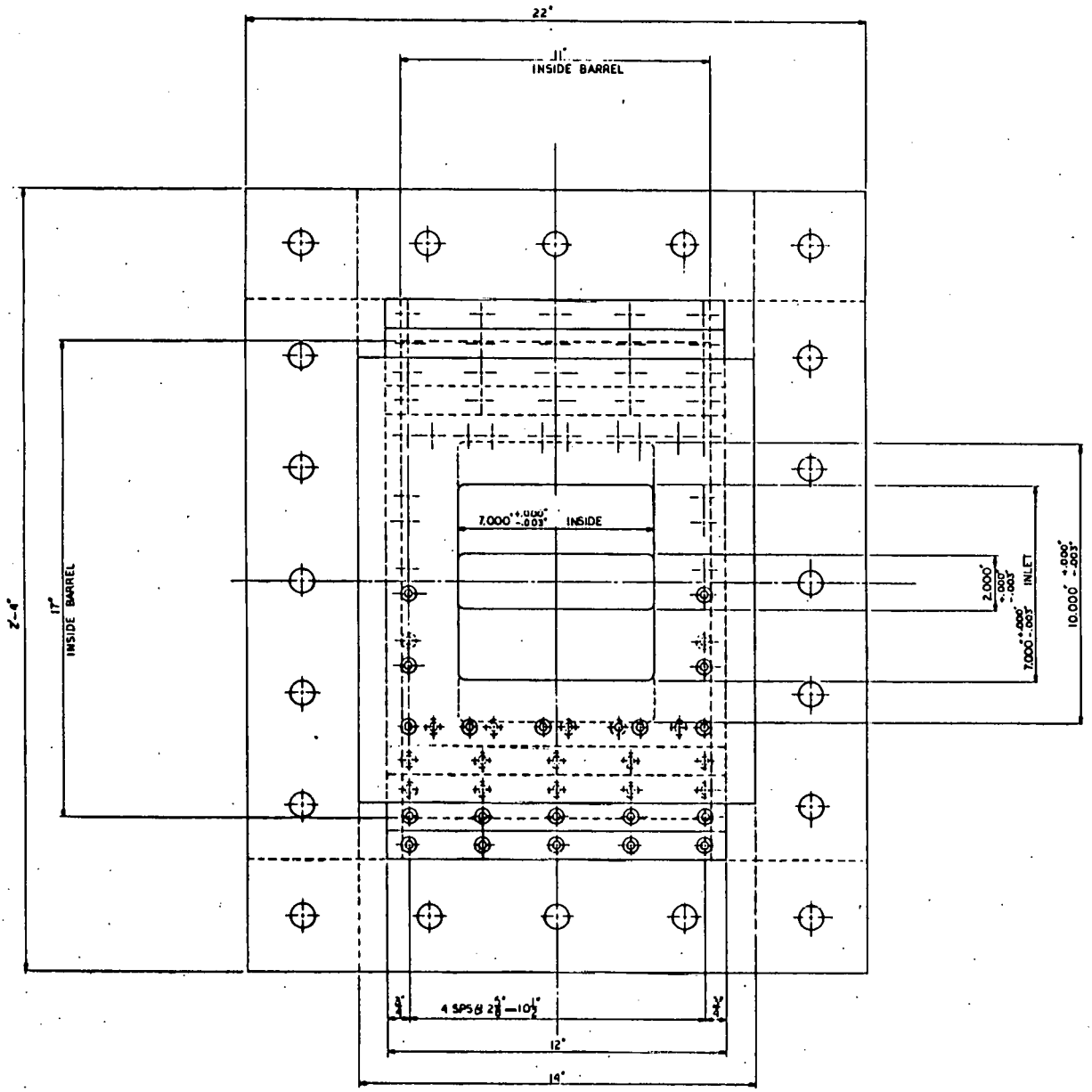

Figure 11 Front View of CDS Nozzle

fit in the plates. This reduces the distance between the gas side metal surface and the nearest cooling passage. This is especially desirable in plates 3, 4 and 5 since these plates are exposed to the highest heat fluxes (Figures 6, 7) in the throat area of the nozzle. In addition, the smaller holes make it easier to maintain a higher mass velocity which aids in cooling. The larger holes are used elsewhere where extra cooling is not required. In addition, the tolerances between the larger holes should make their fabrication (drilling) less expensive.

The water supply system used for cooling the nozzle is also used in the barrel. It is provided by UTSI and has its own cooling tower. The inlet water conditions to the CDS have been given as 90F and 150 psig. A constraint of a 50F maximum bulk temperature rise has been requested by UTSI to prevent overtaxing their system.

It is imperative that the bulk water conditions in CDS never reach steaming conditions--that it always remain subcooled. This is to prevent any steam bubbles from collecting and causing a burnout. Subcooled water can be maintained by having sufficient mass velocities and overall flows. During the design stage it was determined that subcooled nucleate boiling will probably occur in most sections, but the bubbles are quickly absorbed by the cooler bulk stream of the water flow. Subcooled nucleate boiling will improve the cooling since it yields a higher water conductance than non-boiling film conditions.

The spacing between drilled passages and the thickness of the metal between the gas and the drilled passages have been determined for the cooling requirements. UTSI uses a 1/8" thickness along the gas side. Since the CDS life has been designated at 2000 hours of operation, this thickness has been increased to 3/16" for an erosion factor. Cooling calculations show that the added thickness can be adequately cooled. Determining whether a thickness is acceptable or not is dependent upon the allowable

surface metal temperature. This has been set (for the entire CDS) at not greater than 600F at upset conditions. Sufficient margins in the design indicate that the actual metal temperatures will be lower. The holes have been spaced an equal distance from each other in the available plate thickness. For example, the 1/4" holes are spaced on 1/2" centers and the 3/8" holes are spaced on 5/8" centers in a 2" plate.

The nozzle is fastened together in succeeding layers starting at the diverging end and proceeding upstream with each plate bolting into the plate preceding it. Gas tight seals are attained by O-rings that are in slots around the periphery of the internal openings. The two end plates of the nozzle have been enlarged to provide a flange lip so that the nozzle can be bolted to the combustor and barrel at each end.

Plate number 1 is the connecting flange to the combustor. This plate will move due to the thermal expansion of the HRSR furnace. The movement is 1-15/16" downward and 1" in the direction of the combustor. This movement is referenced from the position of the HRSR system at ambient conditions.

The water is delivered to each individual passage in the CDS nozzle by a flexible hose. This arrangement is possible due to the mild inlet and outlet cooling water conditions and is currently being used in MHD channel test facilities. It is necessary that the pressure drop through each line from inlet to outlet be approximately equalized. If this is not done, those passages with the highest pressure drop might not receive enough flow and may experience burnout. The pressure drop is increased in selected passages by introducing orifices or restrictors in the hoses. Though valves can be used, they provide a too easy target for unauthorized adjustment.

	Nozzle Plate Number	1	2	3	4	5	6	7	8	9	10	10-A
3	Heating Surface (Ft^2)	0.392	0.305	0.261	0.303	0.251	0.328	0.362	0.397	0.431	0.465	0.813
5	Average Heat Flux ($Btu/Ft^2/Hr$)	825,000	1,100,000	1,350,000	1,215,000	850,000	540,000	320,000	235,000	195,000	175,000	30,000
7	Heat Transferred (Btu/Hr)	323,400	335,500	352,350	368,150	213,350	177,120	115,840	93,295	84,050	81,380	24,390
9	Cooling Water Flow (GPM)	12	19	13	15	8	8	5	5	5	5	2
11	Cooling Water Flow (Lb/Hr)	6,000	9,500	6,500	7,500	4,000	4,000	2,500	2,500	2,500	2,500	1,000
13	Number X Size of Channels	3 x 3/8"	3 x 3/8"	4 x 1/4"	5 x 1/4"	4 x 1/4"	3 x 3/8"	3 x 3/8"	3 x 3/8"	3 x 3/8"	3 x 3/8"	1 x 3/8"
15	Mass Velocity ($Lb/Ft^2/Hr$)	2.61×10^6	3.69×10^6	4.77×10^6	4.40×10^6	2.93×10^6	1.74×10^6	1.09×10^6	1.09×10^6	1.09×10^6	1.09×10^6	1.3×10^6
17	Channel Exit Water Temp. (F)	144	125	144	139	143	134	136	127	124	123	115
19	Average Water Film Temp Drop (F)	272	259	258	243	236	247	212	161	136	126	19
21	Average Metal Temp. Drop (F)	96	151	137	118	79	63	37	27	23	20	22
23	Average Metal Temp (F)	512	535	539	500	458	444	385	315	283	269	156
25	Design Max. Heat Flux ($Btu/Ft^2/Hr$)	920,000	1,300,000	1,410,000	1,400,000	1,050,000	700,000	500,000	500,000	500,000	500,000	100,000
27	Design Max. Metal Temp (f)	560	590	560	564	545	549	553	541	542	549	237
29	Water Side Pressure Drop (PSI)	5.9	13.6	20.7	17.7	8.1	2.5	1.0	1.1	1.1	1.3	1.9

TABLE I SUMMARY OF NOZZLE SECTION

Table 1 provides a summary of the minimum nozzle cooling water requirements. Approximately 100 GPM of water will be used in the nozzle. This flow rate will account for a pressure drop of 21 psi in plate 4. The other individual pressure drops will be adjusted to equalize flow. The total cooling water, however, can be increased to extend the safety margin.

B.6.2. Barrel Construction

The CDS barrel is a rectangular cross-sectional area gas conduit of 10 feet long, connecting the nozzle outlet and the HRSR furnace inlet. The barrel is fabricated entirely with oxygen-free copper plates and consists of six sections. The internal height dimension of the barrel has two step increases. The height of the barrel is first step-increased to 17" at the connection with the nozzle and its second step increase to a height of 24" occurs at a distance of 48" from the barrel inlet. The internal width of the barrel also has its first step increase to 11" at the nozzle connection, followed by an angular expansion of 3.18^{0} on each side, starting at a distance of 32" from the barrel inlet, to a final width of 19 inches. As the internal geometry of the gas channel and the requirements of cooling dictate, the first portion of the barrel between the two step increases of its height is divided into three sections of 16" each in length, and the remaining portion is also divided into three sections with 24" each in length. Figure 12 illustrates the division of barrel sections.

Figure 13 shows a typical individual barrel section. The individual section in the barrel consists of four copper panels. Each panel is formed by silver soldering a 1/2" thick copper plate on another 1" thick copper plate with the cooling channels milled into the 1/2" thick plate.

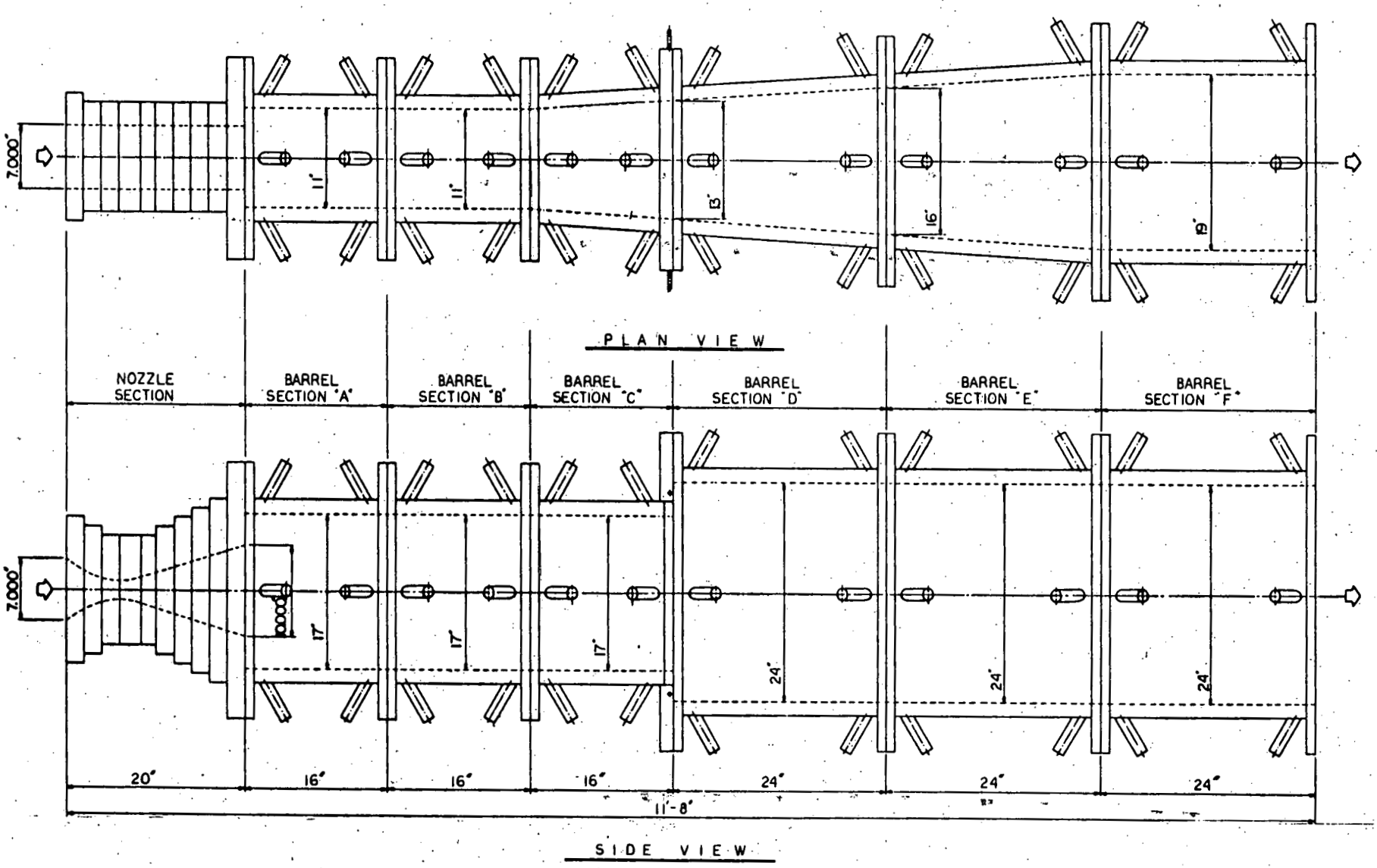

Figure 12 Plan View and Side View of CDS Barrel

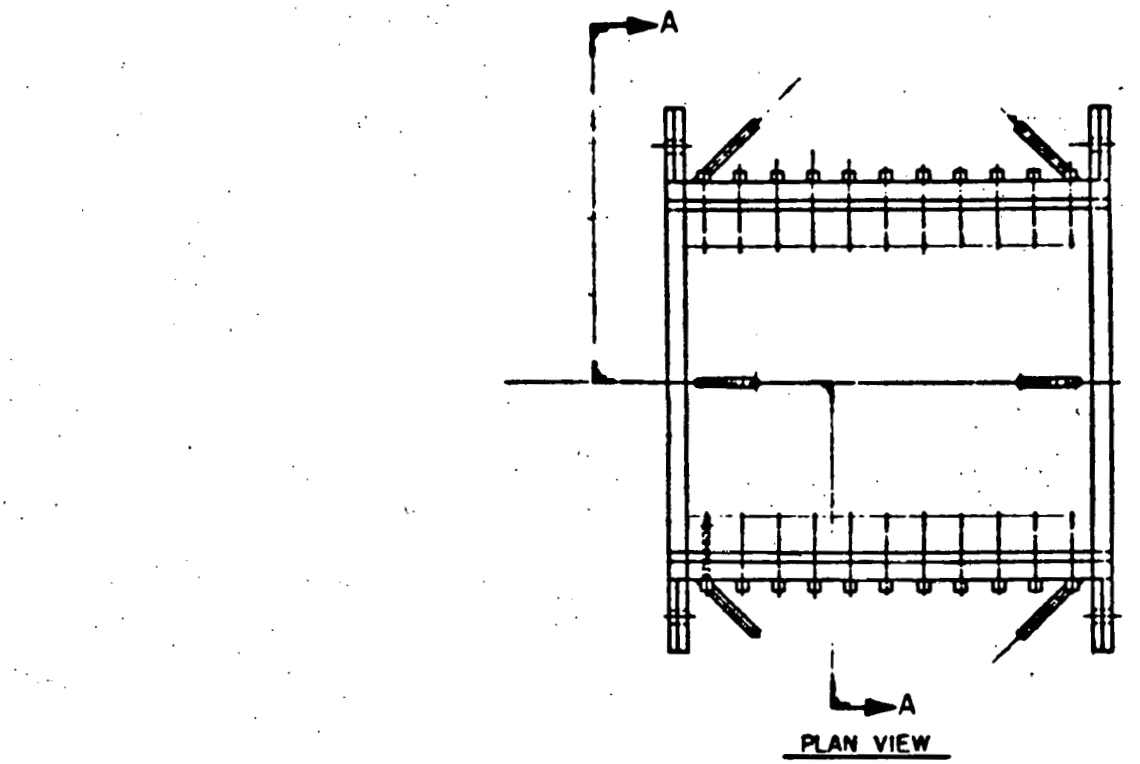

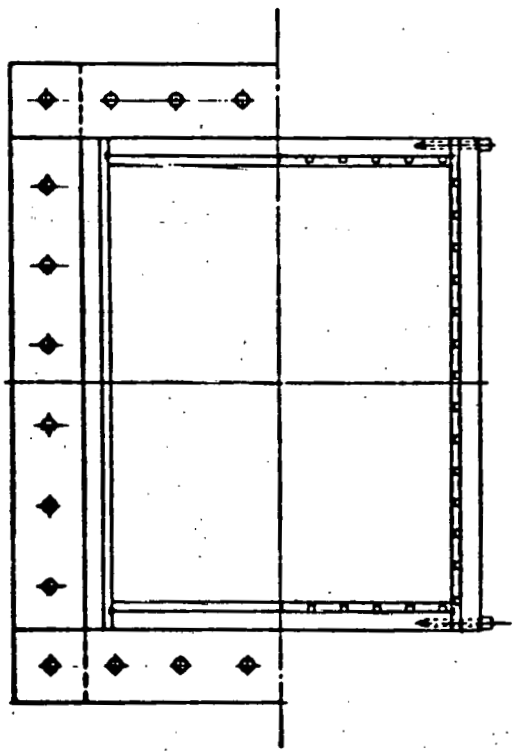

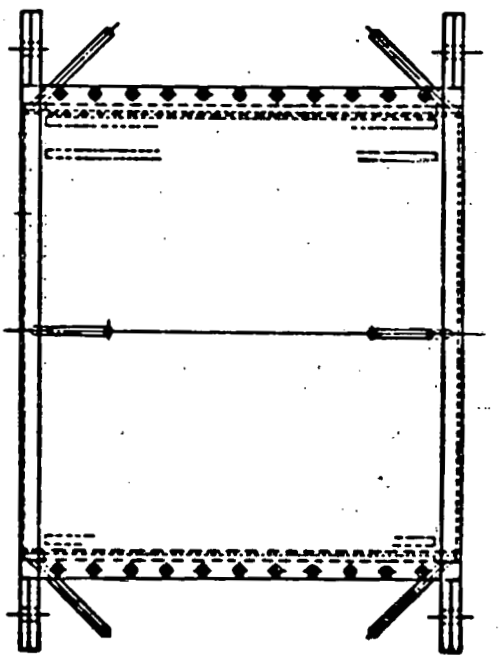

Figure 13 Individual Barrel Section

The section is obtained by bolting the side panels along the side edges of the top and bottom panels. As a result, the total width of each side panel is 3" longer than the height of the internal gas conduit. O-ring channels are also milled into the side panels so that the O-rings are held in place along the edges of the top and bottom panels to prevent gas leakage from the barrel section.

The dotted lines in Figures 14 and 15 indicate the typical cooling passages of the barrel. These passages are 3/16" deep and 1/4" wide and are oriented parallel with the gas flow. Flow reattachment in the barrel will produce high spot heat fluxes. Parallel passages will distribute the heat pick up over many channels and prevent possible burnouts. At each end of the channels, a header cooling channel is located. These channels are also 3/16" deep and are tapered to distribute the flow evenly across the whole width and maintain the mass velocity and prevent boiling as the flow nears the corners. The number of cooling channels in each panel is increased as the panel dimensions are made larger along the length of the barrel. With the increased number of channels, the clear spacings between the cooling circuits are reduced so that optimum cooling of the metal walls can be maintained. For details of the panel cooling circuits, the readers are referred to the drawings of the barrel sections in Appendix D.

The total cooling water flow to the CDS barrel is approximately 360 GPM. Each side, top and bottom panel requires 30 GPM for fluid flow distribution. The required 30 GPM flows are routed through two panel sections in series. Flexible hoses are used between the two panels for inlet and outlet water connections. The maximum bulk temperature rise is 40F. This series arrangement permits better use

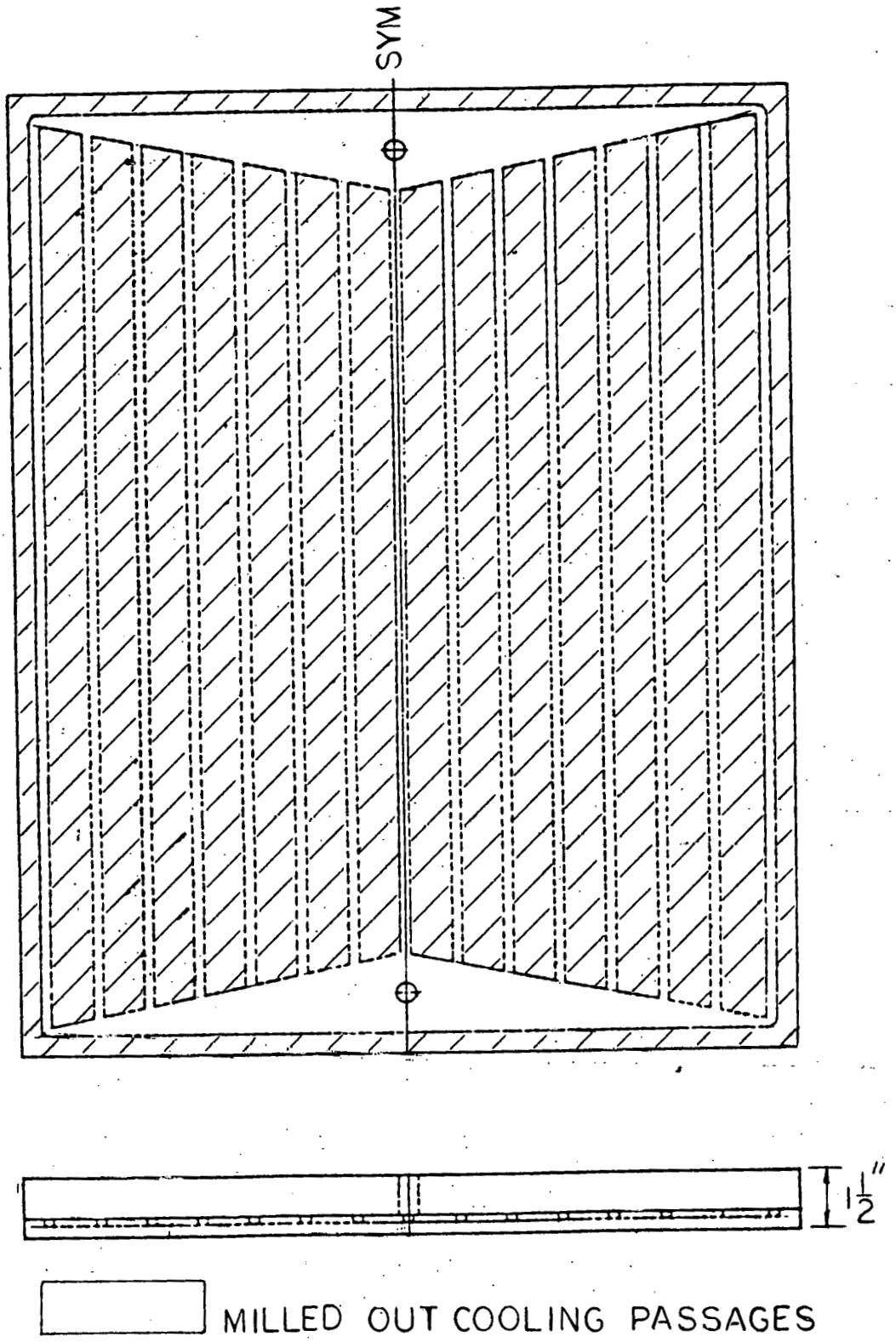

Figure 14 Barrel Section Top or Bottom Panel

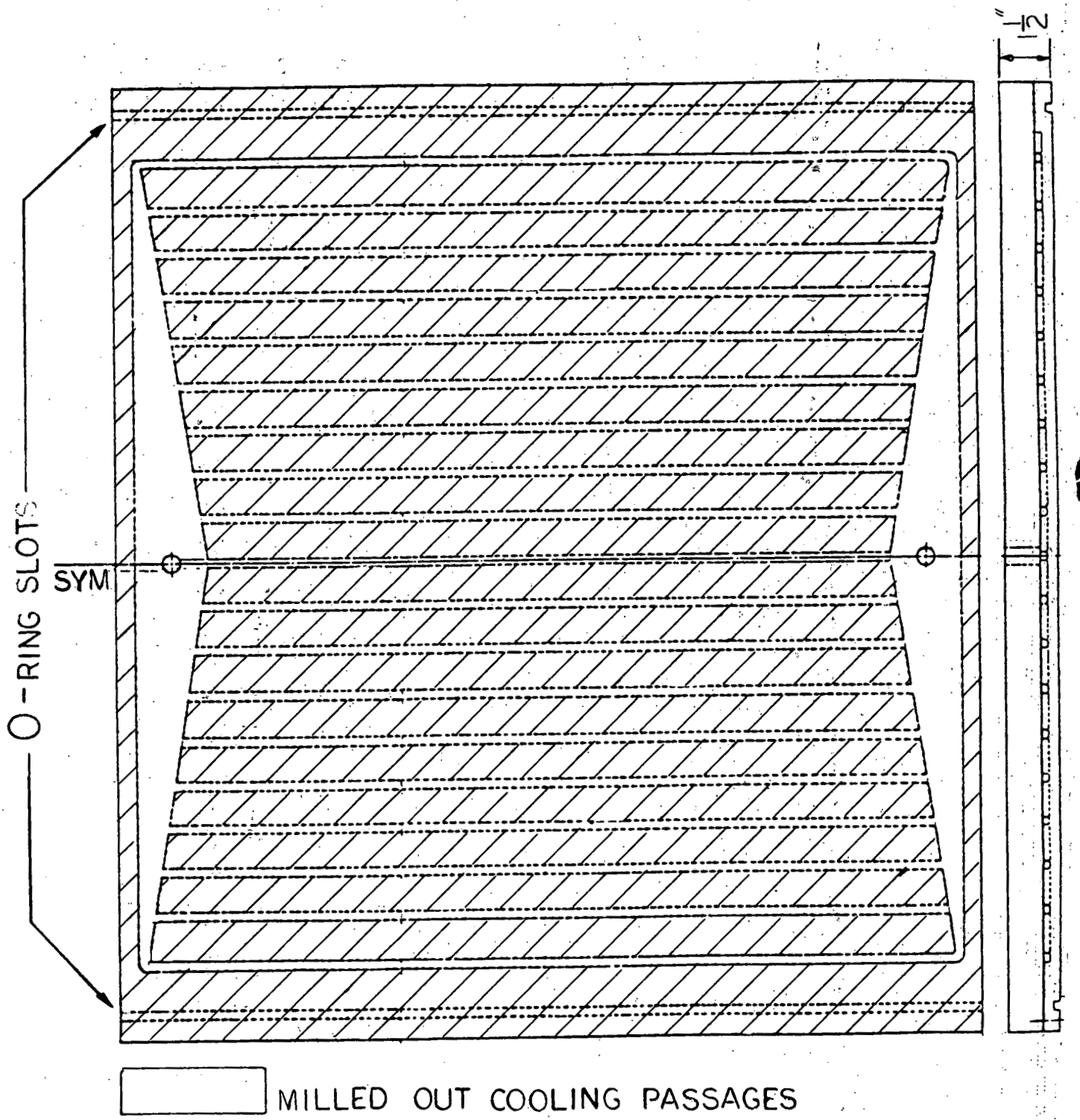

Figure 15 Barrel Section Side Panel

of the water by allowing less water to do more work (increased temperature rise with lower total flow). The pressure drop of the cooling water is approximately 20 PSI across the inlet and outlet headers of two panels in the series arrangement.

In addition to the permitted temperature rise, a maximum upset design heat flux was set at 500,000 Btu/hr ft^2. At the flows specified, and at the worst possible position, the maximum metal surface temperature is maintained below 600F. The barrel is conservatively designed since the probable heat fluxes are on the order of 100,000 to 200,000 Btu/hr ft^2 for the worst case.

The barrel sections are secured to the nozzle and furnace and each other by 1" thick, 4" wide copper flanges. The flanges are silver soldered on top of the 1.0" copper backplate of each top, bottom and side plate. The face of the flange is mounted at the end of each plate. The flanges are long enough to permit a 4" overhang on both sides of each plate. This overhang is notched to a 1/2" thickness in a manner so that the notched corner of the top will fit in the notched corner of the side flange (see Figure 13). This arrangement prevents forming a 45 degree angle gap and producing a direct route for the gas to escape. Between the flanges of two sections, an O-ring is present to prevent gas leakage between the flanges.

In conclusion, the barrel has been designed on a very conservative basis. This is due, in part, to the uncertainties of the behavior of the flow involved.

B.7. Possible Performance Deviations and Solution Options

The purpose of this section is not to necessarily list possible deviations, but to exhibit that the CDS design is flexible enough to be

capable of being adjusted to eliminate or lessen the impact of the possible deviations. Though there is evidence in the literature that this design will work and that there has been testing to support this, deviations in the predicted performance may occur and solution options have been formulated. The major aim in the design of the CDS has been to maximize the flexibility of the design. If the design is flexible, it will be possible to correct problems with a minimum of refabrication.

The nozzle design permits relatively easier adjustment capabilities. Deviations that may occur but not limited to are:

- choke throat passes too little or too much flow.
- formation of disruptive oblique shock waves.
- premature flow separation from nozzle walls.

The solutions to these deviations may require that the internal geometry of the nozzle be changed. Since the nozzle is formed of individual vertical plates, new plate(s) can be fabricated and installed to reflect the necessary change. The nozzle design permits maximum flexibility for adjustment if necessary.

Any adjustment of internal surface in the manner just indicated will require more than milling the surfaces. The presence of cooling holes near the internal surface prevents simple removal of surface. Soldering on surface may not be acceptable if the final thickness is beyond the ability of the available cooling circuit to cool.

The flexibility of the barrel lies in the ability to remove or add complete sections to adjust the temperature. The barrel provides the surface for the flow to attach to after it leaves the nozzle. If the flow exiting the nozzle does not behave as expected, any modification concerning the barrel is limited to adjusting the overall length.

Sections can be added or deleted to obtain the desired temperature.

It is doubtful that the barrel dimensions are in such error to make them totally useless since the flow is subsonic. However, should this happen, a nozzle adjustment may make the barrel performance acceptable. This may only involve a few plates where a barrel redesign could require a minimum effort equal to 1/2 the magnitude that was required to build the barrel originally since the barrel has a constant cross section.

In conclusion, the CDS design does permit modifications. These changes are more simply done in the nozzle which has a greater influence on the flow behavior. Also, changes in the nozzle will probably involve smaller quantities of material compared to the barrel. The barrel modifications are best limited to adjusting the total barrel length since a change in geometry would require a major fabrication effort.

B.8. Instrumentation and Controls

The instrumentation and controls for the simulator has been limited to thermocouples and a flow meter to determine shut down or trip conditions. The total inlet water flow to the simulator nozzle and barrel is continually measured. Likewise, the outlet temperature of all the outlet flows are monitored individually. An alarm is present to warn of low flow conditions or high water temperatures. If the corrective measures are not taken, and either a lower flow of water or a higher exit water temperature is achieved, the combustor is tripped. In addition, the bulk fluid inlet and outlet temperatures of the water are measured for energy balance purposes.

B.9. Design Background

Influence Coefficient Method for Calculation of Gas Properties in a Duct

Supersonic nozzle design is well known, and an adequate design can be made if proper analytical methods are used. However, supersonic nozzles are designed for two purposes, rocket propulsion and uniform flow in a wind tunnel. In both cases flow separation is not a problem and the flow should be as close to reversible adiabatic as possible, i.e., adiabatic efficiency is of utmost importance and one wants the stagnation pressure to be constant. The CDS, however, has a main purpose of dissipating 5 atmospheres and 450°F and perform this mission in a quiet and inexpensive manner. To do this one must employ shock waves which leads to separate flow problems.

The sophisticated two and three dimensional analytical methods available can not adequately handle shock waves and separated flow. Mass flow rates and flow properties can be determined adequately by quasi-one dimensional analytical techniques, thus it is felt that more sophisticated techniques would not enhance the design. CDS performance can be verified by use of a half scale cold flow model test as will be discussed later.

The analysis of gas flow through a duct is simplified if only a single independent parameter is allowed to change. For example, it is easy to analyze the gas flow if friction and heat transfer is neglected and only area change is considered.

However in this analysis, as in most practical situation, all three parameters viz: area change, friction, and heat transfer must be taken

INFLUENCE COEFFICIENTS FOR CONSTANT SPECIFIC HEAT AND MOLECULAR WEIGHT

	$\frac{dA}{A}$	$\frac{dT_0}{T_0}$	$4f\frac{dx}{D}+\frac{dX}{\frac{1}{2}kpAM^2}-2y\frac{dw}{w}$	$\frac{dw}{w}$
$\frac{dM^2}{M^2}$	$-\frac{2\left(1+\frac{k-1}{2}M^2\right)}{1-M^2}$	$\frac{(1+kM^2)\left(1+\frac{k-1}{2}M^2\right)}{1-M^2}$	$\frac{kM^2\left(1+\frac{k-1}{2}M^2\right)}{1-M^2}$	$\frac{2(1+kM^2)\left(1+\frac{k-1}{2}M^2\right)}{1-M^2}$
$\frac{dV}{V}$	$-\frac{1}{1-M^2}$	$\frac{1+\frac{k-1}{2}M^2}{1-M^2}$	$\frac{kM^2}{2(1-M^2)}$	$\frac{1+kM^2}{1-M^2}$
$\frac{dc}{c}$	$\frac{\frac{k-1}{2}M^2}{1-M^2}$	$\frac{\frac{1-kM^2}{2}\left(1+\frac{k-1}{2}M^2\right)}{1-M^2}$	$-\frac{k(k-1)M^4}{4(1-M^2)}$	$-\frac{\frac{k-1}{2}M^2(1+kM^2)}{1-M^2}$
$\frac{dT}{T}$	$\frac{(k-1)M^2}{1-M^2}$	$\frac{(1-kM^2)\left(1+\frac{k-1}{2}M^2\right)}{1-M^2}$	$-\frac{k(k-1)M^4}{2(1-M^2)}$	$-\frac{(k-1)M^2(1+kM^2)}{1-M^2}$
$\frac{dp}{p}$	$\frac{M^2}{1-M^2}$	$-\frac{1+\frac{k-1}{2}M^2}{1-M^2}$	$-\frac{kM^2}{2(1-M^2)}$	$-\frac{(k+1)M^2}{1-M^2}$
$\frac{dp}{p}$	$\frac{kM^2}{1-M^2}$	$-\frac{kM^2\left(1+\frac{k-1}{2}M^2\right)}{1-M^2}$	$-\frac{kM^2[1+(k-1)M^2]}{2(1-M^2)}$	$-\frac{2kM^2\left(1+\frac{k-1}{2}M^2\right)}{1-M^2}$
$\frac{dp_0}{p_0}$	0	$-\frac{kM^2}{2}$	$-\frac{kM^2}{2}$	$-kM^2$
$\frac{dF}{F}$	$\frac{1}{1+kM^2}$	0	$-\frac{kM^2}{2(1+kM^2)}$	0
$\frac{ds}{c_p}$	0	$1+\frac{k-1}{2}M^2$	$\frac{(k-1)M^2}{2}$	$(k-1)M^2$

NOTE: Each influence coefficient represents the partial derivative of the variable in the left-hand column with respect to the variable in the top row; for example

$$\frac{dM^2}{M^2}=-\frac{2\left(1+\frac{k-1}{2}M^2\right)}{1-M^2}\frac{dA}{A}+\frac{(1+kM^2)\left(1+\frac{k-1}{2}M^2\right)}{1-M^2}\frac{dT_0}{T_0}+\frac{kM^2\left(1+\frac{k-1}{2}M^2\right)}{1-M^2}\left(4f\frac{dx}{D}+\frac{dX}{\frac{1}{2}kpAM^2}-2y\frac{dw}{w}\right)$$
$$+\frac{2(1+kM^2)\left(1+\frac{k-1}{2}M^2\right)}{1-M^2}\frac{dw}{w}$$

Table 2 Influence Coefficients

into account. This makes the whole method more complex. The computer is the best resort for a gas dynamic analysis where more than one parameter changes. The method of influence coefficients is one way of determining the gas dynamics of a duct.

The method of influence coefficients, as employed in gas dynamics, is a set of differential equations obtained from combining the momentum, the continuity and the energy equations and the equation of state. When these equations are combined, a set of dependent and independent variables can be selected. For examples, if the continuity equation is considered

$$\dot{m} = \rho A V$$

1. The stagnation temperatures at throat and inlet of duct.
2. The stagnation pressure at inlet.
3. Gas constant R and specific heat ratio (γ).
4. Friction factor.
5. The nozzle geometry and mass flow rate.

From Table 2 the governing differential relation for Mach number is:

$$\frac{dM^2}{dx} = M^2 \psi G(x)/(1- m^2)$$

where $\psi = 1 + (\gamma - 1)M^2/2$

and

$$G(x) = -\frac{2}{A}\frac{dA}{dx} + \frac{1 + \gamma M^2}{T_o(x)}\frac{dT_o}{dx} + xM^2\frac{4F}{D(X)}$$

Since the nozzle has variable height (converging-diverging) D, but constant width W_i, the cross sectional area is given by

$$A = (h)\ (D)$$

or

$$\frac{dA}{A} = \frac{hdD}{hD} = \frac{dD}{D(x)}$$

where D varies with axial distance x. In equation 3, the right hand side, which is divided by $(1 - M^2)$, increases without bound as the sonic point (M = 1) is approached and the equation becomes indeterminate at the sonic point. In the region close to sonic point, L'Hospital's Rule is applied by setting G(x) = 0 and then differentiating G(x) and $1 - M^2$ with respect to x. Thus, the limiting value of $\frac{dM^2}{dx}$ can be obtained at the sonic point.

The governing differential equation for stagnation pressure, as obtained from Table 2 is as follows.

$$\frac{dP_o}{dx} = -\frac{KM^2 P_o}{2}\left[\frac{dT_{ox}}{T_{ox}} + \frac{4f}{D(x)}\right]$$

The following variables and constants are known or assumed and are input as data in the computer program:

1. The stagnation temperature at throat and inlet of duct.
2. The stagnation pressure at inlet.
3. The gas constant R and specific heat ratio γ.
4. The friction factor.
5. The nozzle geometry and mass flow rate.
6. A linear stagnation temperature distribution.

The computer program does the following operations:

1. Locates the sonic point by Newton Raphson method. The sonic point is not at the throat because of the presence of friction and heat transfer.

2. Numerically integrates the differential equation in Mach number M, using equal step sizes in x, from the sonic point to the inlet by a fourth order Runge-Kutta method. Thus the Mach number at the inlet is determined.

3. Forward integration from the inlet to the exit of the nozzle. A forward integration is also performed for the differential relation of stagnation pressure, P_o, so that it is available at every step axially.

4. As the inlet Mach is available from Operation 2 above, the static pressure P_1 can be calculated using:

$$P = P_o \left[1 + \frac{\gamma - M^2}{2}\right]^{\frac{-\gamma}{\gamma-1}}$$

5. The mass flow rate is checked with that input in the program; if it is not equal to that specified, the throat is reduced or increased by iterations until there is a specified agreement (0.5%) nozzle between the two.

6. An important condition to be satisfied for the nozzle design is an exit static pressure of 1 atmosphere. This can be achieved by placing a normal shock at some distance slightly downstream of the throat and calculating the Mach number and static pressure after the normal shock. The standard ex pression for this can be obtained from Shapiro[14].

$$M_2^2 = \left(M_x^2 + \frac{2}{\gamma-1}\right) \div \left(\frac{2\gamma M_x^2}{\gamma-1} - 1.0\right)$$

where M_2 is the Mach number after shock and:

$$P_2 = P_x \left[1 + \gamma M_x^2\right] \div \left[1 + \gamma M_2^2\right]$$

where P_2 is static pressure after shock and P_x is local static measure calculated using the relation

$$P_x = P_1 * \frac{A_2}{A_x} * \frac{M_1^2}{M_x^2} \left[\frac{1 + \frac{\gamma - 1}{2} M_1^2}{1 + \frac{\gamma - 1}{2} M_x^2}\right]^{0.5} \left[\frac{T_{o_2}}{T_{o_1}}\right]^{0.5}$$

where A_x is the local cross-sectional area, which is known from input geometry of nozzle and M_x is the local Mach number determined at every point by forward integration.

If P_2 is greater than 1 atm, the forward integration is marched forward and the calculations repeated at the next step where it is again checked for the required value of 1 atm. The forward marching is continued until a point is reached where P_2 is less than 1 atm. At this point the integration is stopped. Thus the total length of the nozzle is determined.

The one-dimensioned gas dynamic program yields the correct throat area to pass the required mass flow rate, the correct nozzle length (and hence area ratio) for a normal shock to stand in the exit plane and yield a nominal 1 atmosphere pressure downstream, the static pressure distribution down the nozzle, the stagnation pressure distribution down the nozzle, and static temperature distribution over the length of the nozzle.

Radiative Heat Transfer Calculation Procedure

The method given by Hottel and Sarofim[26] is employed for radiative heat transfer calculations in the nozzle and barrel. The radiative heat flux is given by the expression

$$q = \frac{Q}{A} = \dot{\sigma} \left(\varepsilon_g T_g^4 - \left(\alpha_g\right)_{T_w} \cdot T_w^4 \right)$$

ε_g, the gas emissivity is a function of mean beam length, gas static pressure, static temperature and species partial pressures. If the combustion products in the HRSR simulator diffuser, CO_2 and H_2O are the only constituents which contribute significantly to the radiative heat transfer. The effect of other products such as N_2, NO, and CO have negligible effect in contributing to radiative heat transfer, as is apparent from the emissivity charts in Hottel and Sarofim[26]. Hence only CO_2 and H_2O are considered in the radiative heat transfer calculations.

The gas emissivity is given by

$$\varepsilon_g = C_{co_2} \ \varepsilon_{co_2} + C_{H_2O} \ \varepsilon_{H_2O} - \Delta\varepsilon$$

where C_{co_2} and C_{H_2O} are pressure correction terms and read from charts given in Howell and Siegel[29]. ε_{co_2} and ε_{H_2O} are emissivities of CO_2 and H_2O respectively. To determine those quantities the static pressure and temperature must be known at every section of the nozzle. These are obtained from the influence coefficients computer program. Also the partial pressures of CO_2 and H_2O must be calculated at every section.

The partial pressure of a gas constituent at a section is given by the following thermodynamic relation.

Partial pressure = (mole fraction) (total static pressure at the section considered).

The mole fractions of gas constituents were read from CEC-76[12] thermochemical program. The emissivities of CO_2 and H_2O are dependent upon the Mean Beam Length. Since the nozzle has a complicated geometry, the following formula was employed to calculate Mean Beam Length (Howell and Siegel), at various nozzle cross-sections

$$L_e = \left(0.9\right)\left(4\right)\left(\frac{V}{A}\right)$$

where V is the volume of the gas in the section considered and A, the surface area of the same volume of gas.

After determining the above quantities, the parameters upon which the emissivity depends viz:

$P_{CO_2}L_e$, $P_{H_2O}\ L_e$, P_{H_2O} $P_{CO_2} + P_{H_2O}$ and $P_{CO_2}L_e + P_{H_2O}L_e$

were calculated. Emissivity was, then, directly read from these charts for CO_2 and H_2O. The term $\Delta\varepsilon$, in equation[14], accounts for emission reduction due to spectral overlap of the CO_2 and H_2O absorption bands. This quantity was also read from figures given in Reference (29) as all the dependent parameters were known. The term $\alpha g\ (T_w)$ in equation (13), is the absorption of gas for radiation emitted from the wall at the wall temperature, rather than gas static temperature.

The term $\alpha g\ (T_w)$ was calculated as follows (Howell & Siegel)

$$\alpha g = \alpha_{CO_2} + \alpha_{H_2O} - \Delta\alpha$$

where $$\alpha_{CO_2} = C_{CO_2}\ \varepsilon^{+}_{CO_2} \left(\frac{T_g}{T_w}\right)^{0.65}$$

and

$$\alpha_{H_2O} = C_{H_2O}\ \varepsilon^{+}_{CO_2} \left(\frac{T_g}{T_w}\right)^{0.45}$$

and

$$\Delta\alpha = \Delta\varepsilon \text{ determined at } T_w$$

The terms $\varepsilon^{+}_{CO_2}$ and $\varepsilon^{+}_{H_2O}$ are respectively ε_{CO_2} and ε_{H_2O} obtained from emissivity charts (29) evaluated at T_w and at respective parameters

$$P_{CO_2} L_e \left(\frac{T_w}{T_g}\right) \quad \text{and} \quad P_{H_2O} L_e \left(\frac{T_w}{T_g}\right).$$

To find radiative heat transfer at a section considered, the heat flux was multiplied by the cross sectional area.

The method for heat transfer calculation for the barrel portion following the nozzle, is similar to that for the nozzle except that the barrel has a standard geometry approximately equivalent to a circular cylinder of height equal to diameter, so that the Mean Beam Length could be directly obtained from the table given in Howell and Siegel.

This method of heat transfer calculation is relatively simple, but may involve errors. The reading of quantities like ε_{CO_2}, ε_{H_2O}, $\Delta\varepsilon$, etc.

from the charts may introduce inaccuracies, which have cumulative efforts on εg and αg. Since εg and αg are multiplied by the fourth power temperatures, this error is magnified.

The calculation of Mean Beam Length by employing equation (15) is only approximate, but since the nozzle geometry is complex, any other method of radiative heat transfer calculation viz. diffusion method or coupling of radiative heat transfer with convective heat transfer, would involve making extensive modifications in the turbulent compressible boundary layer program.

B.10. CDS Model Test

The purpose of the CDS model is to reduce the risk of the CDS design. By aerodynamically testing the CDS geometry in a scale model designed for and operating on air, it will be possible to detect possible performance deviations and substantiate performance objectives that will have an impact on the full sized CDS design.

The size of the CDS model is approximately one half of the CDS design for the HRSR system. A half scale model is easily fabricated and a full scale model does not offer any advantages in the data it would provide over the data available on the half scale model.

Figure 15 shows the model nozzle geometry and Figure 16 is a schematic of the test system. Compressors with air dryers fill a 2000 ft^3 storage tank up to 150 psig. The flow to the model is regulated by a 16" butterfly control valve that is hydraulically operated. The valve is calibrated to allow a range of upstream pressures to be made available to

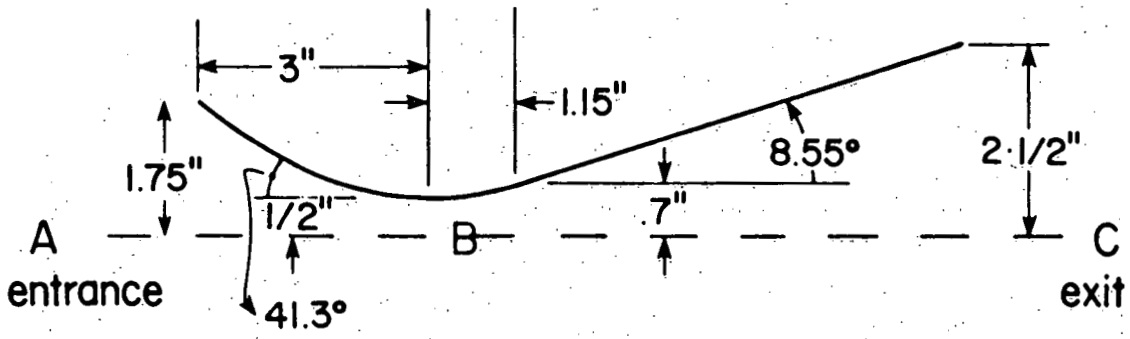

Figure 15. CDS Model Nozzle Geometry

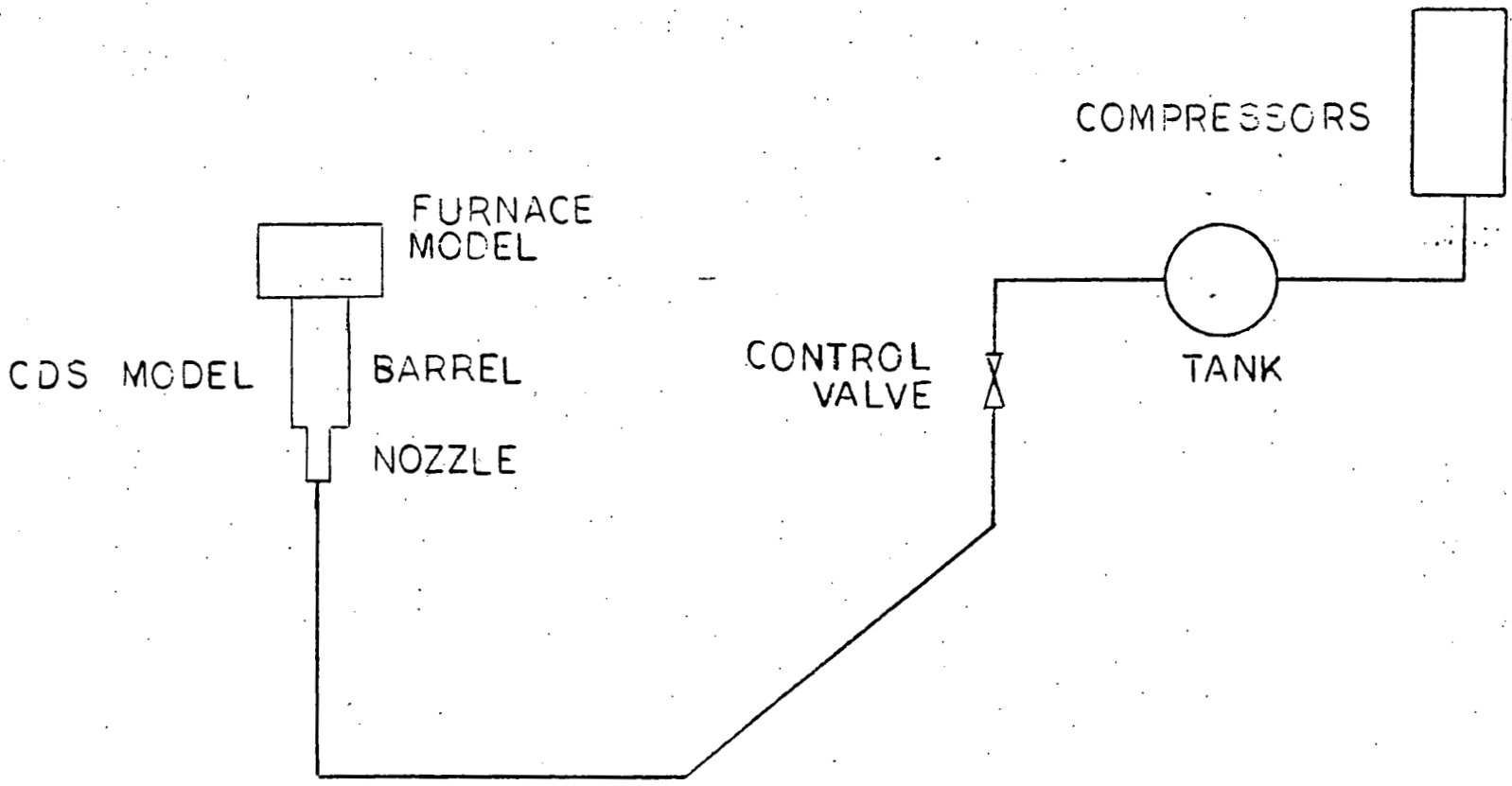

Figure 16 Flow Schematic of CDS Test System

the model. The model consists of a half scale nozzle, barrel and a furnace to accurately model the upward turn the flow experiences in the full size design.

The design flow characteristics of the model matches those of the full sized CDS design. The choked throat, the location of the shock wave and points of reattachment of the model are the same, proportionally, as those of the full scale CDS.

The testing of the model is to verify the design flow characteristics as described above or to determine where deviations from design conditions occur. Any deviations will have to be evaluated to determine this effect on the required performance. If deviations do occur and their effects are unacceptable, the testing program is flexible to permit alterations to be made and testing to continue.

The final system design to be obtained from the model tests will have to start and perform with uniform flow at a total pressure of 5 atmospheres. Flow separation is an important flow phenomena in the CDS design. Page 209 of Reference 16 shows that the correlation of data on flow separation in nozzles is independent of γ. Thus the cold flow model tests of the CDS with air can be used to determine the performance of the CDS with 4250°F hot gases. The heat transfer within the hot gas CDS will add stability to the flow over that of cold tests, i.e., it is felt if it will work as a cold flow model, it will adequately perform under actual conditions.

REFERENCES

1. Hyde, J.C., and Gill, G.S., "Liquid Rocket Engine Nozzles," NASA SP-8120, July 1976.

2. Shackelford, M., Letter to Mr. Robert Selby, ENG/DE/8913, November 13, 1979.

3. Thompson, P.A., Compressible-Fluid Dynamics, McGraw-Hill, New York, 1972.

4. Arens, M., and Spiegler, E., "Shock-Induced Boundary Layer Separation in Overexposed Conical Exhaust Nozzles," AIAA Journal, Vol. 1, No. 3, March 1963, pp 578-581.

5. Lawrence, R. A., and Weynand, E. E., "Factors Affecting Flow Separation in Contoured Supersonic Nozzles," AIAA Journal, Vol. 6, No. 6, June 1968, pp 1159-1161.

6. Roschke, E. J., and Massier, P. F., "Flow Separation in a Contour Nozzle," ARS Journal, October 1962, pp 1612-1613.

7. Green, L., "Flow Separation in Rocket Nozzles," ARS Journal, January 1953, pp 34-35.

8. Bushnell, D. M., and Weinstein, L. M., "Correlation of Peak Heating for Reattachment of Separated Flows." Journal of Spacecraft and Rocket. Vol. 5, No. 9, September 1968, pp 1111-1112.

9. Sutton, G. P., Rocket Propulsion Elements, John Wiley, New York, 1956.

10. Hill, P. G., and Peterson, C. R., Mechanics and Thermodynamics of Propulsion, Addison-Wesley, Inc., Reading, Mass., 1965.

11. Gordon, S. and McBride, B. J., "Computer Program for Calculation of Complex Chemical Equilibrium Compositions, Rocket Performance, Incident and Reflected Shocks, and Chapman-Jouquet Detonations," NASA SP-273, March 1976.

12. Svehla, R. O., and McBride, B. J., "Fortran IV Computer Program for Calculation of Thermodynamic and Transport Properties of Complex Chemical Systems," NASA/Lewis Research Center, NASA TN D-7056, January 1973.

13. Shapiro, A. H., The Dynamics and Thermodynamics of Compressible Fluid Flow; Ronald Press, New York, 1953.

14. Beans, E. W., "Compressible Flow Processes Involving Area, Friction, and Total Temperature Change," Journal of Spacecraft and Rockets, Vol. 6, No. 3, March 1969, pp 331-333.

15. Beans, E. W., "Computer Solution to Generalized One-Dimensional Flow," Journal of Spacecraft and Rockets, Vol. 7, No. 12, December 1970, pp 1460-1464.

16. Zucrow, M. J., and Hoffman, J. D., Gas Dynamics, John Wiley, New York, 1976.

17. Adams, J. C., Jr., "Implicit Finite-Difference Analysis of Compressible Laminar Transitional, and Turbulent Boundary Layers Along the Windward Streamline of a Sharp Cone at Incidence," AEDC TR-71-235, Arnold AFS, TN, December 1971.

18. Hodge, B. K., "Extended Mixing-Length Hypothesis Applications to Transpired or Roughwall Compressible Boundary Layers," ASME Paper 78-HT-22 presented at the AIAA-ASME Thermophysics and Heat Transfer Conference, Palo Alto, Calif., May 24-26, 1978.

19. Hodge, B. K., "An Assessment of Rough Surface Boundary-Layer Calculation Methods," in Turbulent Boundary Layers, ed. H. E. Weber, ASME Publication, 1979.

20. Adams, J. C. and Hodge, B. K., "The Calculation of Compressible, Transitional, Turbulent, and Relaminarizational Boundary Layers over Smooth and Rough Surfaces Using an Extended Mixing Length Hypothesis," AIAA Paper No. 77-682 presented at the AIAA 10th Fluids and Plasma Dynamics Conference, Albuquerque, New Mexico, June 27-29, 1977.

21. Hodge, B. K. and Adams, J. C., Jr., "The Calculation of Compressible Transitional, Turbulent, and Relaminarizational Boundary Layers over Smooth and Rough Surfaces Using an Extended Mixing-Length Hypothesis," AEDC-TR-77-96, February 1978.

22. Korkegi, R. H., "Survey of Viscous Interactions Associated with High Mach Number Flight," AIAA Journal, Vol. 9, No. 5, May 1971, pp 771-789.

23. Johnson, C. B., and Kaufman, L. G., II, "Interference Heating from Interactions of Shock Waves with Turbulent Boundary Layers at Mach 6," NASA TN D-7699, September 1974.

24. Hung, C. M., and MacCormack, R. W., "Numerical Simulation of Supersonic and Hypersonic Turbulent Compression Corner Flow," AIAA Journal, Vol. 15, No. 3, March 1977, pp 410-416.

25. Hodge, B. K., "Prediction of Hypersonic Laminar Boundary-Layer/Shock-Wave Interactions." AIAA Journal, Vol. 15, No. 7, July 1977, pp 903-904.

26. Hottel, H. C., and Sarofim, A. F., Radiative Transfer, McGraw Hill, New York, 1972.

27. Gerhart, P. M., "Heat Transfer Downstream of a Turbulent Supersonic Shea Layer," AIAA Journal, Vol. 11, No. 1, January 1973, pp 104-106.

28. Wrubel, J. A., and Carlson, L. W., "Study of Heat Transfer Characteristics of Hot-Gas Igniters," AFRPL-TR-67-267 Edwards AFB, CA, July 1967.

29. Howell, J. R., and Siegal, R., Thermal Radiation Heat Transfer, McGraw Hill, New York, 1972.

APPENDIX C

EQUIPMENT ARRANGEMENT DRAWINGS

TABLE OF CONTENTS

		Page
	HRSR Steam Generator	
39772F-2	MHD Recovery Boiler - Sectional Side View	C1
39773F-3	MHD Recovery Boiler - Auxiliary Side Views	C2
39774F-3	MHD Recovery Boiler - Plan View	C3
	HRSR Plant Arrangements	
M0036-C	Plant Island Arrangement	C4
M0040-E	General Arrangement - Plans	C5
M0041-B	General Arrangement - Plans	C6
M0042-E	General Arrangement - Sections	C7

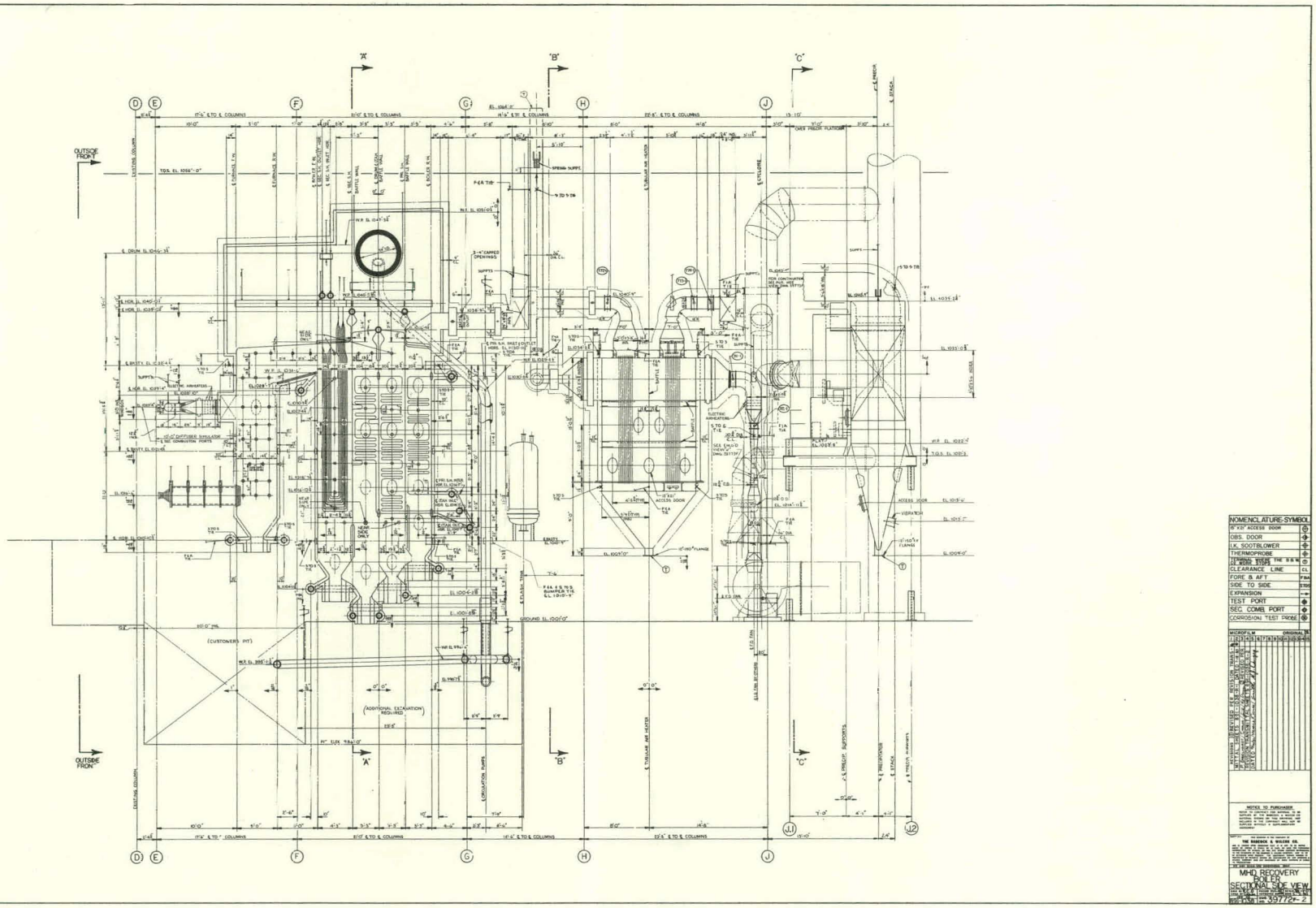
NOMENCLATURE-SYMBOL
OBS. DOOR
I.K. SOOTBLOWER
THERMOPROBE
CLEARANCE LINE
FORE & AFT
SIDE TO SIDE
EXPANSION
TEST PORT
SEC. COMB. PORT
CORROSION TEST PROBE
MICROFILM
ORIGINAL
NOTICE TO PURCHASER
THE BABCOCK & WILCOX CO.
MHD RECOVERY
BOILER
SECTIONAL SIDE VIEW
39772-2
OUTSIDE FRONT
(CUSTOMER'S PIT)
(ADDITIONAL EXCAVATION REQUIRED)
GROUND EL. 1001'-0"

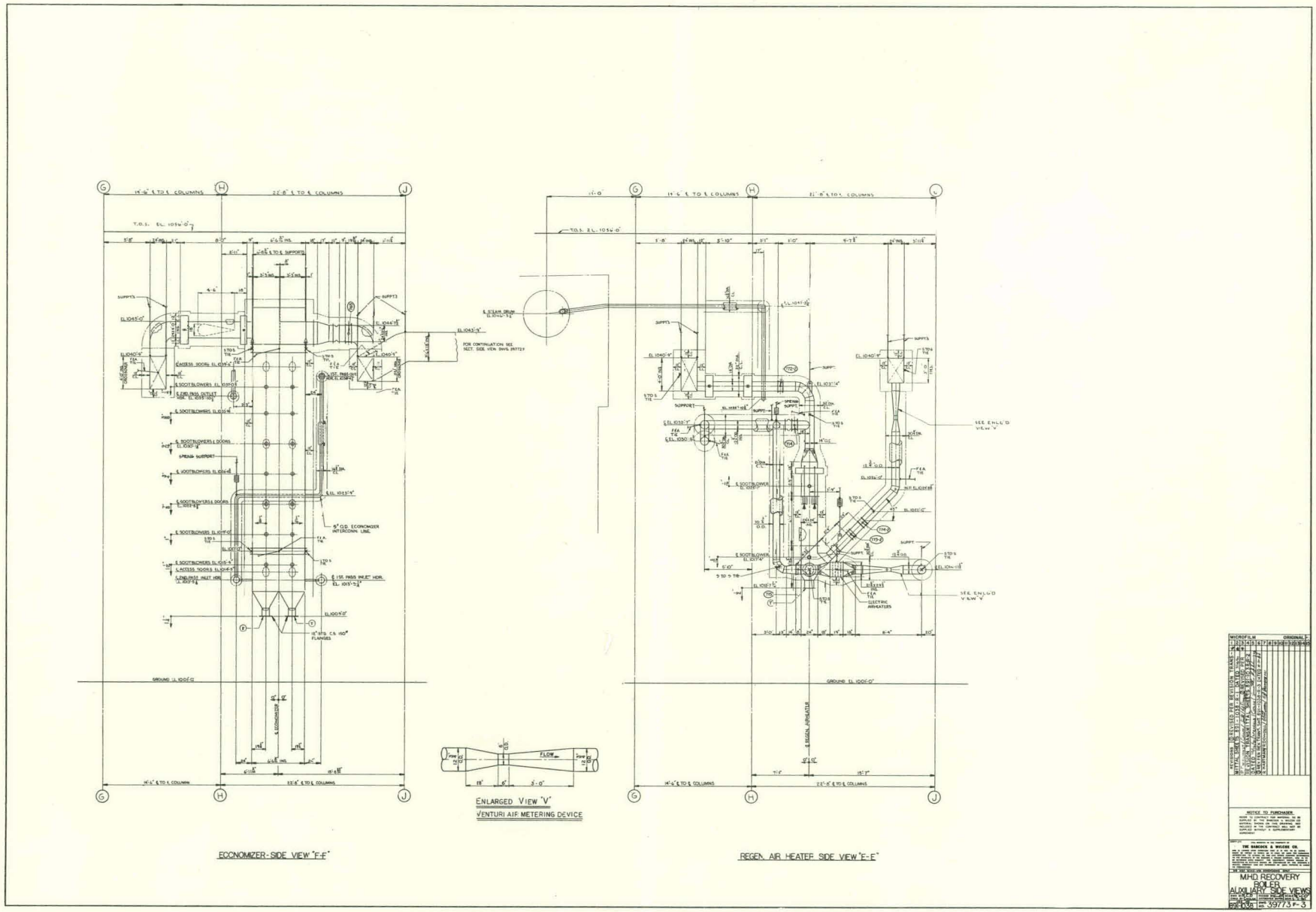
ECONOMIZER-SIDE VIEW "F-F"
ENLARGED VIEW "V"
VENTURI AIR METERING DEVICE
REGEN. AIR HEATER SIDE VIEW "E-E"
MICROFILM
ORIGINAL
NOTICE TO PURCHASER
THE BABCOCK & WILCOX CO.
MHD RECOVERY
BOILER
AUXILIARY SIDE VIEWS
39773 F-3

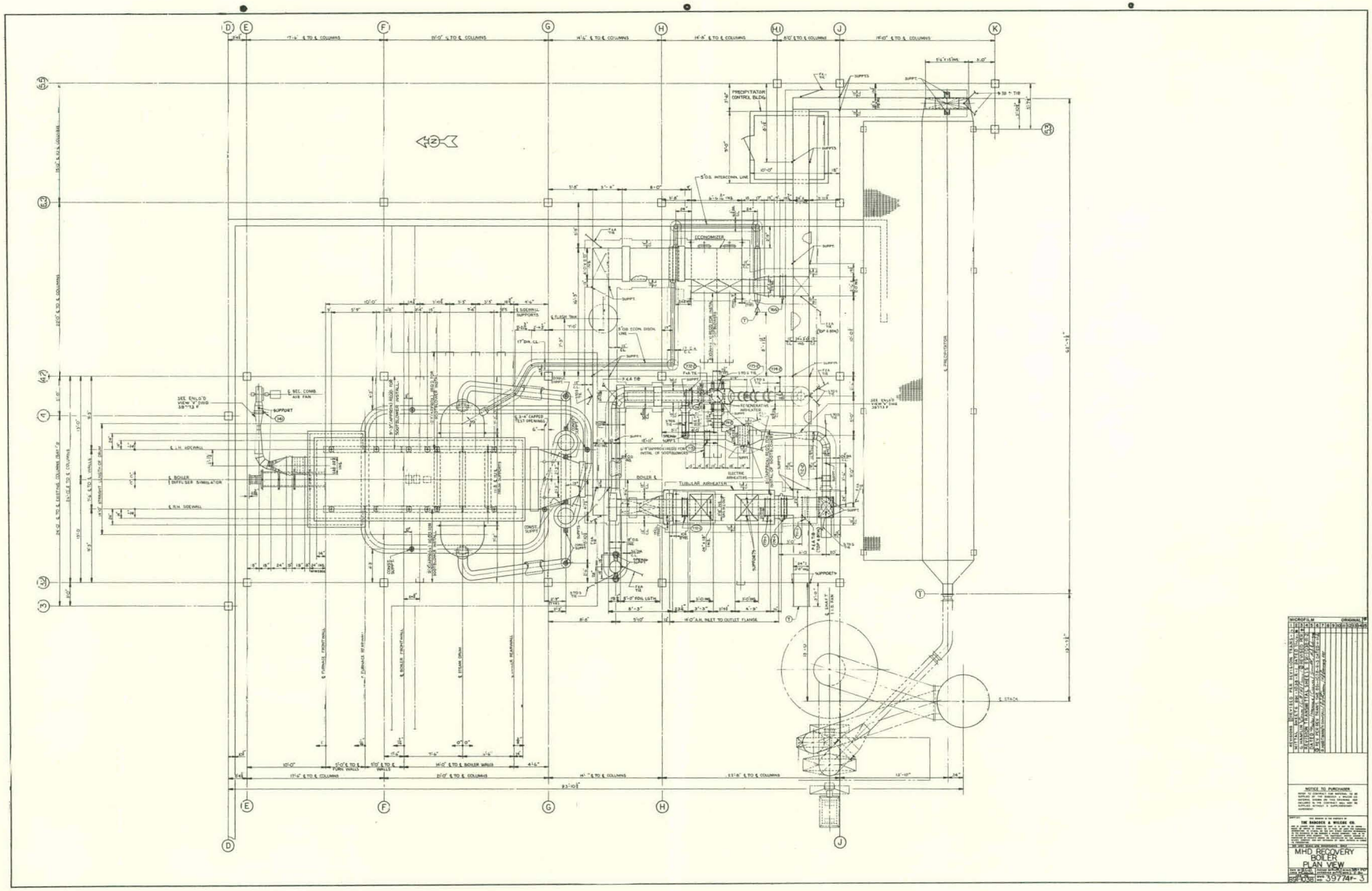
PRECIPITATOR CONTROL BLDG.
ECONOMIZER
TUBULAR AIRHEATER
ELECTRIC PRECIPITATOR
MHD RECOVERY BOILER PLAN VIEW
THE BABCOCK & WILCOX CO.
DRAWING NO. 39748-3

C3

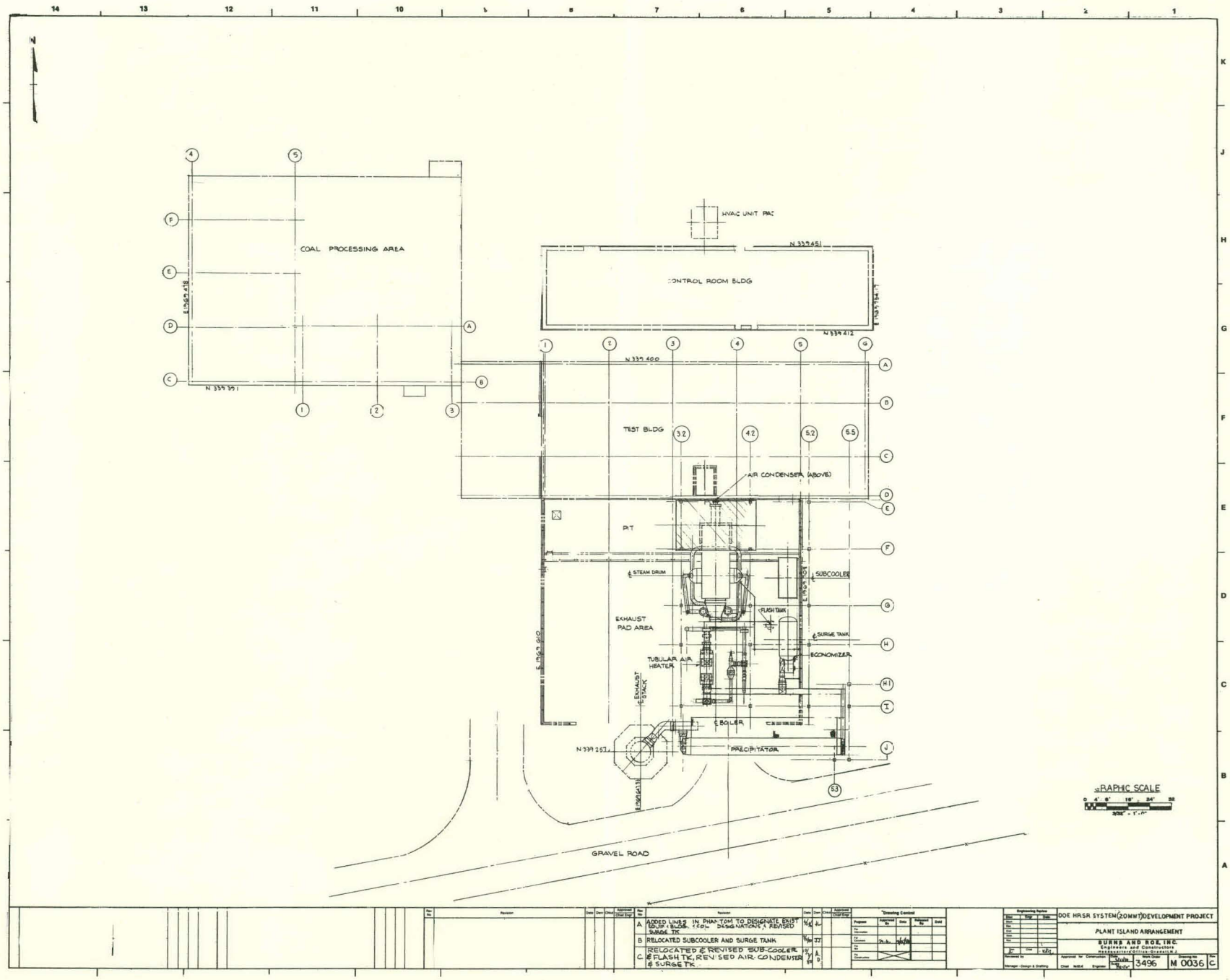
COAL PROCESSING AREA
HVAC UNIT PAD
CONTROL ROOM BLDG
TEST BLDG
AIR CONDENSER (ABOVE)
PIT
STEAM DRUM
SUBCOOLER
FLASH TANK
SURGE TANK
ECONOMIZER
EXHAUST PAD AREA
TUBULAR AIR HEATER
EXHAUST STACK
BOILER
PRECIPITATOR
GRAVEL ROAD
GRAPHIC SCALE
A ADDED LINES IN PHANTOM TO DESIGNATE EXIST EQUIP & BLDG. & COL DESIGNATIONS & REVISED SURGE TK
B RELOCATED SUBCOOLER AND SURGE TANK
C RELOCATED & REVISED SUB-COOLER & FLASH TK, REVISED AIR CONDENSER & SURGE TK
DOE HRSR SYSTEM (20MWT) DEVELOPMENT PROJECT
PLANT ISLAND ARRANGEMENT
BURNS AND ROE, INC.
Engineers and Constructors
3496
M 0036
C

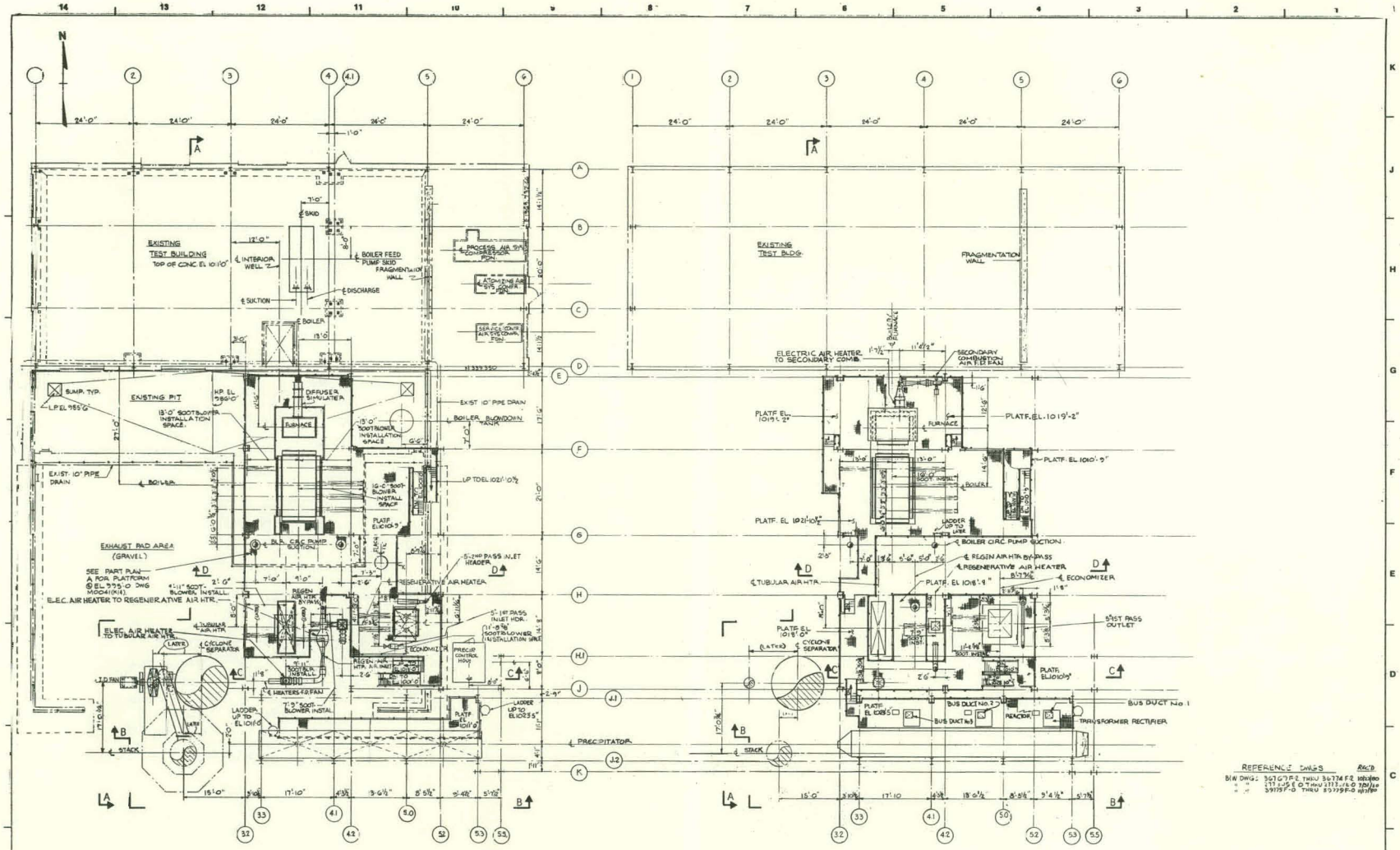

REFERENCE DWGS

		RECD
B&W DWGS:	367G7P2 THRU 367J4P2	10/28/80
" "	377J15 E O THRU 377J16 O 720/10	
" "	391757-0 THRU 391799-0	10/28/80

GRAPHIC SCALES

0 4' 8' 12' 16' 20' 24'

1/8" = 1'-0"

No.	Revision	Date	Dwn	Chkd	Approved Chief Engr
0	GENERAL REVISION, PER B&W LATEST DWG'S.	7/25			
A	ADDED CALL-OUTS FOR ELEC. AIR HTR. TO TUBULAR AIR HTR, ELEC. AIR HTR. TO REGEN. AIR HTR., HTRS. FOR FANS, ELEC. AIR HTR. TO SECONDARY COMBUSTION.	9/4			A.D.

No.	Revision	Date	Dwn	Chkd	Approved Chief Engr
A	LINES IN PHANTOM DESIGNATE EXISTING EQUIP. ROAD & DESIGNATING REVISED FLASH TK PLATFORM	9/4			A.D.
B	REVISED PER LATEST P&W DWGS: 919 3724 720	9/4			A.D.
C	RELOCATED FLASH TK, ADDED PRECIP. CONTROL HOUSE AND BUS DUCT Nos 1, 2 & 3	9/4			A.D.

Drawing Control

Purpose	Approved By	Date	Released By	Date
For Information				
For Comment	Per M.	9/4/81		
For Construction				
For Construction				

Engineering Review

Title	Engr	Date
Elec		
Mech		
Civ		
Arch		
Str		
10th	Chief	9/4

Reviewed by _____ Manager - Design & Drafting

DOE HRSR SYSTEM (20MW(t)) DEVELOPMENT PROJECT

GENERAL ARRANGEMENT

PLANS @ EL 986'-0" - EL 1021-10½ & EL 1021 10½" - 1028-10"

BURNS AND ROE, INC.

Engineers and Constructors

Headquarters Offices - Oradell, N.J.

Approved for Construction _____ Chief Mech. Engineer _____

Work Order 3496

Drawing No. M0040

Rev. E

C5

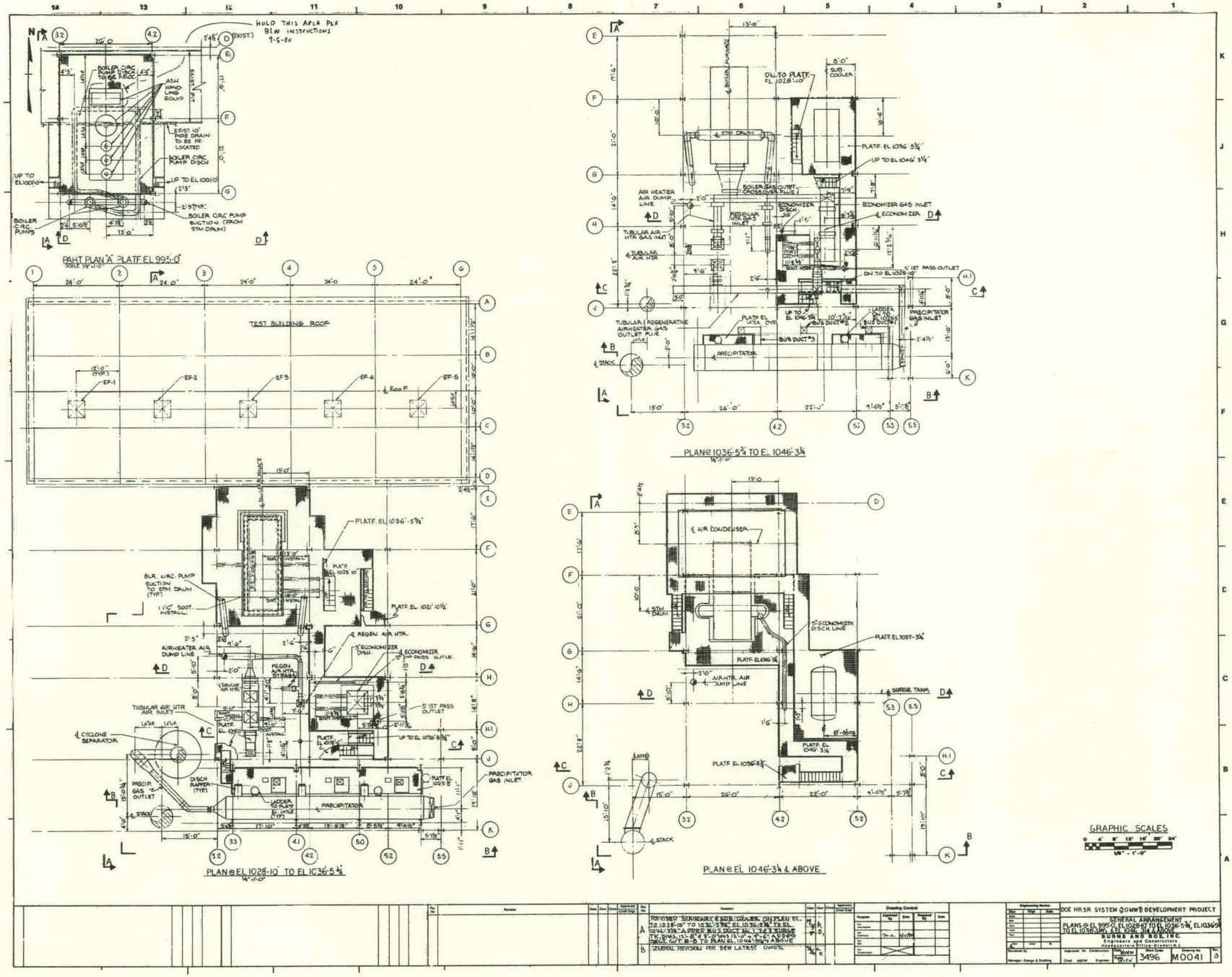
PART PLAN "A" PLATF EL 995'-0"
TEST BUILDING ROOF
PLAN @ EL 1028'-10" TO EL 1036'-5¾"
PLAN @ 1036'-5¾" TO EL 1046'-3¼"
PLAN @ EL 1046'-3¼ & ABOVE
GRAPHIC SCALES
DOE HRSR SYSTEM (20MWD) DEVELOPMENT PROJECT
GENERAL ARRANGEMENT
SURNS AND ROE, INC.
3496
M0041

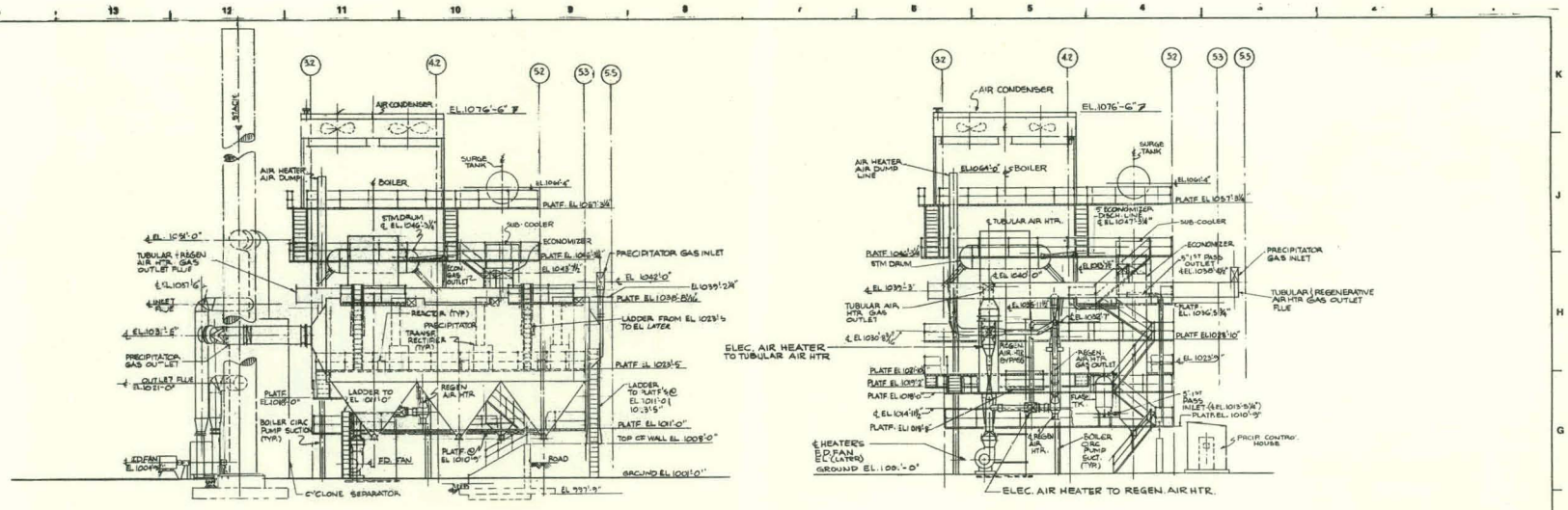

Rev No	Revision	Date	Drawn	Checked	Approved Chief Engr
D	GENERAL REVISION PER LATEST B&W DWG'S.	7/8/77			
E	ADDED CALL-OUTS FOR ELEC. AIR HTR. TO SEC. COMBUSTION, ELEC. AIR HTR. TO TUBULAR AIR HTR. & ELEC. AIR HTR. TO REGEN. AIR HTR.	7/8/77			

Rev No	Revision	Date	Drawn	Checked	Approved Chief Engr
A	LINES IN PHANTOM DESIGNATE EXISTING EQUIPMENT & ADDED (IN) DESIGNATIONS REVISED SURGE TK & ADDED ASH HANDLING EQUIP.	7/8/77	AD		
B	REVISED PER LATEST B&W DWGS	7/8/77	JL		
C	REVISED STAIRWAY, SUB-COOLER, AIR-CONDENSER, SURGE TK IN SECT. A-A, B-B, C-C & D-D ADDED PRECIP. CONTROL HOUSE TO SECT. C-C.	9/8/77	JD		

Drawing Control

Purpose	Approved By	Date	Released By	Date
For Comment				
For Approval				
For Construction	J.W.	9/8/77		
As Built				
Information				

Engineering Review

Disc	Engr	Date
Mech		
Elec		
Civil		
Arch		
Struct		
Other		

Reviewed by _____ Manager-Design & Drafting

DOE HRSR SYSTEM 2 OMW DEVELOPMENT PROJECT

GENERAL ARRANGEMENT

SECTIONS

BURNS AND ROE, INC.
Engineers and Constructors
Headquarters Office: Oradell, N.J.

Approved for Construction: Date 9/8/77 — Drawing No. 3496 M0042 — Rev. E

Chief M&CP _____ Engineer _____

C7

APPENDIX D

CDS BARREL DRAWINGS

TABLE OF CONTENTS

		Page
157028	C&DS Barrel Key Arrangement	D1
157031	C&DS Barrel Sections A & B - Top, Bottom, and Side Panels	D2
157032	C&DS Barrel Section C - Top and Bottom Panels . . .	D3
157033	C&DS Barrel Section C - Side Panels	D4
157034	C&DS Barrel Section D - Top and Bottom Panels . . .	D5
157035	C&DS Barrel Sections D & E - Side Panels	D6
157036	C&DS Barrel Section E - Top and Bottom Panels . . .	D7
157037	C&DS Barrel Section F - Top and Bottom Panels . . .	D8
157038	C&DS Barrel Section F - Side Panels	D9

TABLE OF CONTENTS

		Page
157028	C&DS Barrel Key Arrangement	D1
157031	C&DS Barrel Sections A & B - Top, Bottom, and Side Panels	D2
157032	C&DS Barrel Section C - Top and Bottom Panels . . .	D3
157033	C&DS Barrel Section C - Side Panels	D4
157034	C&DS Barrel Section D - Top and Bottom Panels . . .	D5
157035	C&DS Barrel Sections D & E - Side Panels	D6
157036	C&DS Barrel Section E - Top and Bottom Panels . . .	D7
157037	C&DS Barrel Section F - Top and Bottom Panels . . .	D8
157038	C&DS Barrel Section F - Side Panels	D9

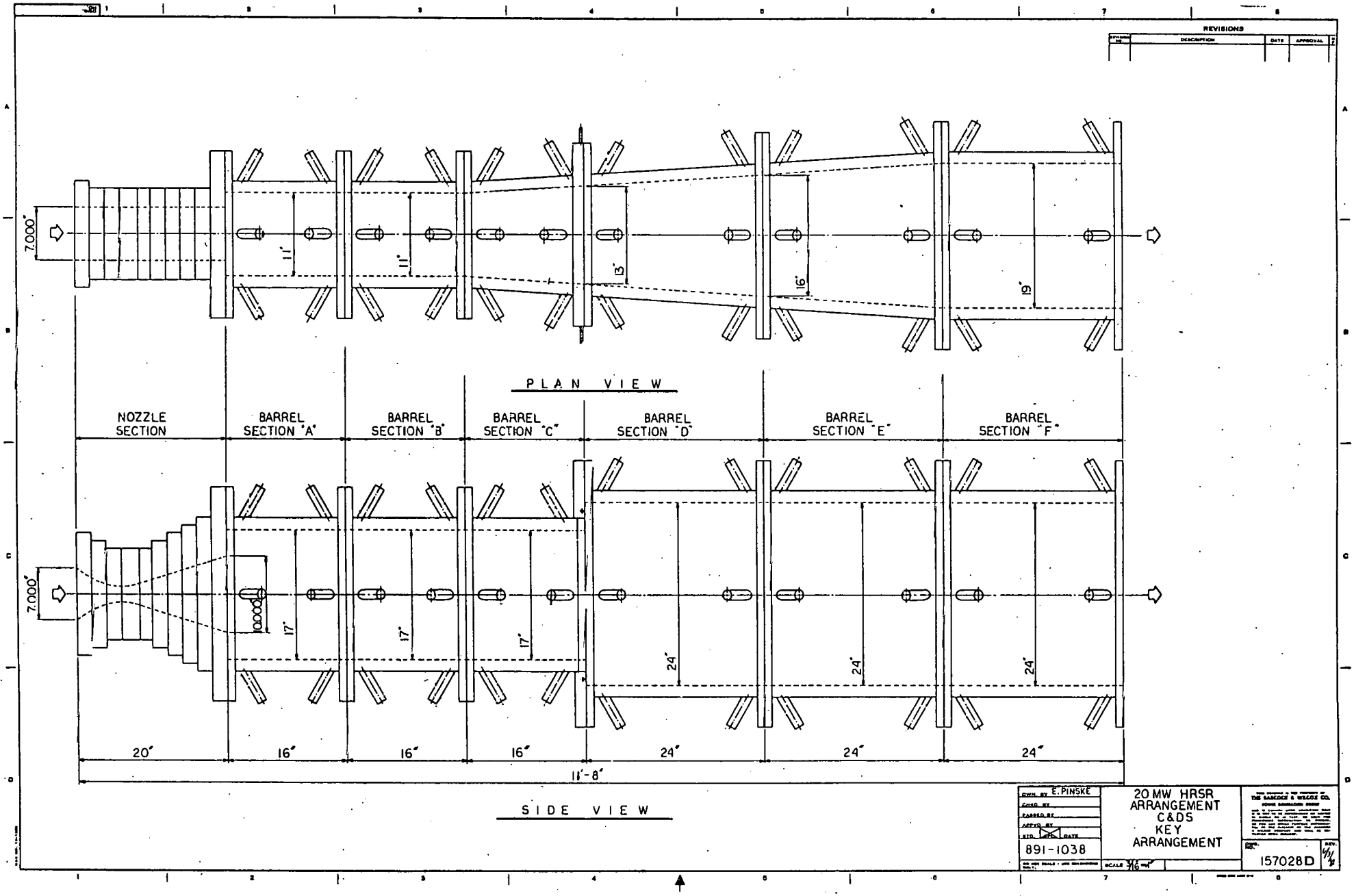
REVISIONS
DESCRIPTION
DATE
APPROVAL
7.000"
11"
11"
13"
16"
19"
PLAN VIEW
NOZZLE SECTION
BARREL SECTION "A"
BARREL SECTION "B"
BARREL SECTION "C"
BARREL SECTION "D"
BARREL SECTION "E"
BARREL SECTION "F"
7.000"
17"
17"
17"
24"
24"
24"
20"
16"
16"
16"
24"
24"
24"
11'-8"
SIDE VIEW
DWN. BY E. PINSKE
CHKD. BY
PASSED BY
APPVD. BY
STD. DATE
891-1038
20 MW HRSR
ARRANGEMENT
C&DS
KEY
ARRANGEMENT
THE BABCOCK & WILCOX CO.
157028D
REV.

01

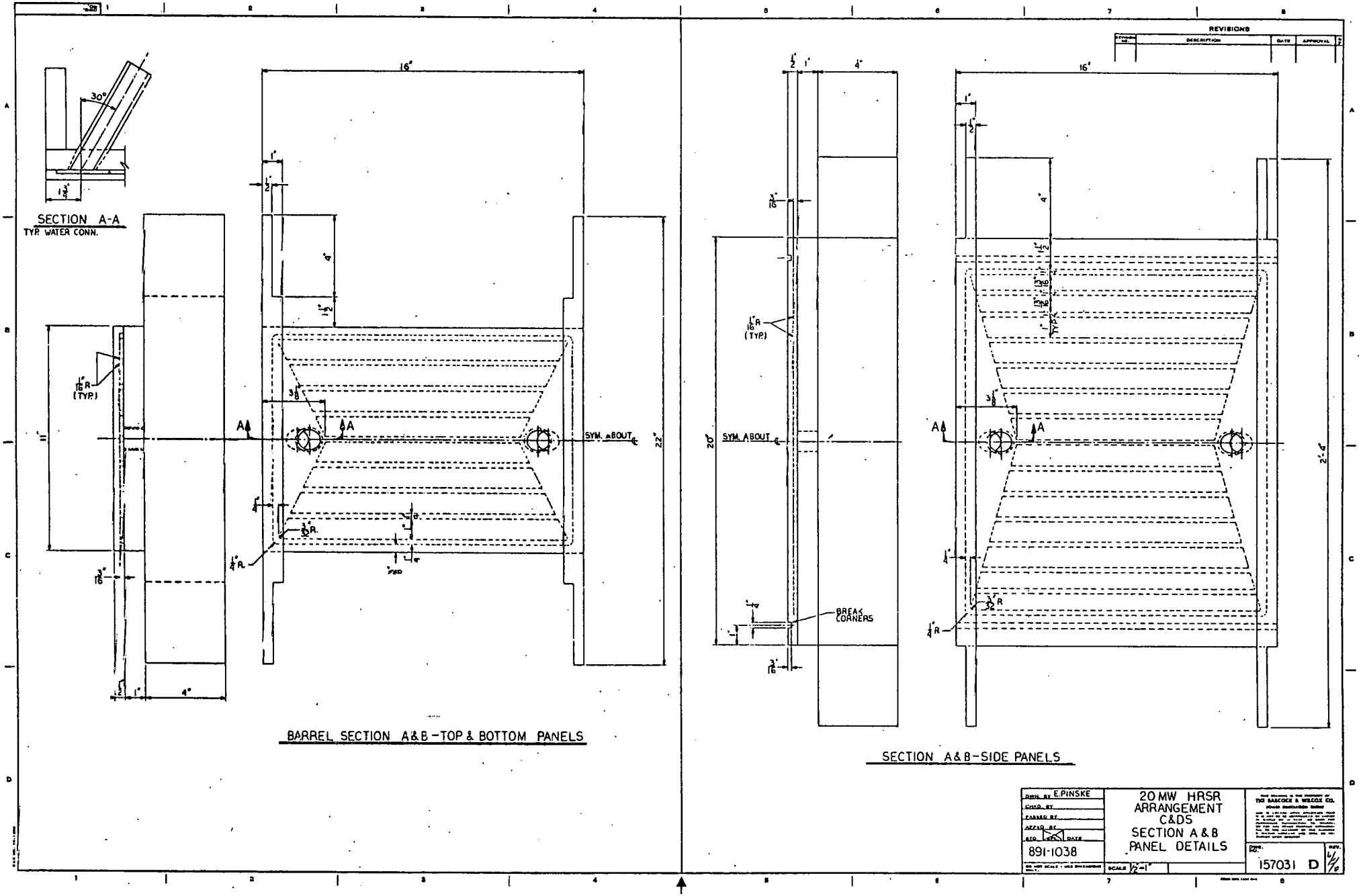
SECTION A-A
TYP. WATER CONN.
30°
BARREL SECTION A&B-TOP & BOTTOM PANELS
SYM. ABOUT ℄
SECTION A&B-SIDE PANELS
BREAK CORNERS
REVISIONS
DESCRIPTION
DATE
APPROVAL
DWN. BY E.PINSKE
CHKD. BY
PASSED BY
APPVD. BY
STD. DATE
891-1038
20 MW HRSR
ARRANGEMENT
C&DS
SECTION A & B
PANEL DETAILS
SCALE 1/2"=1"
THE BABCOCK & WILCOX CO.
DWG. NO. 157031 D
REV.

D2

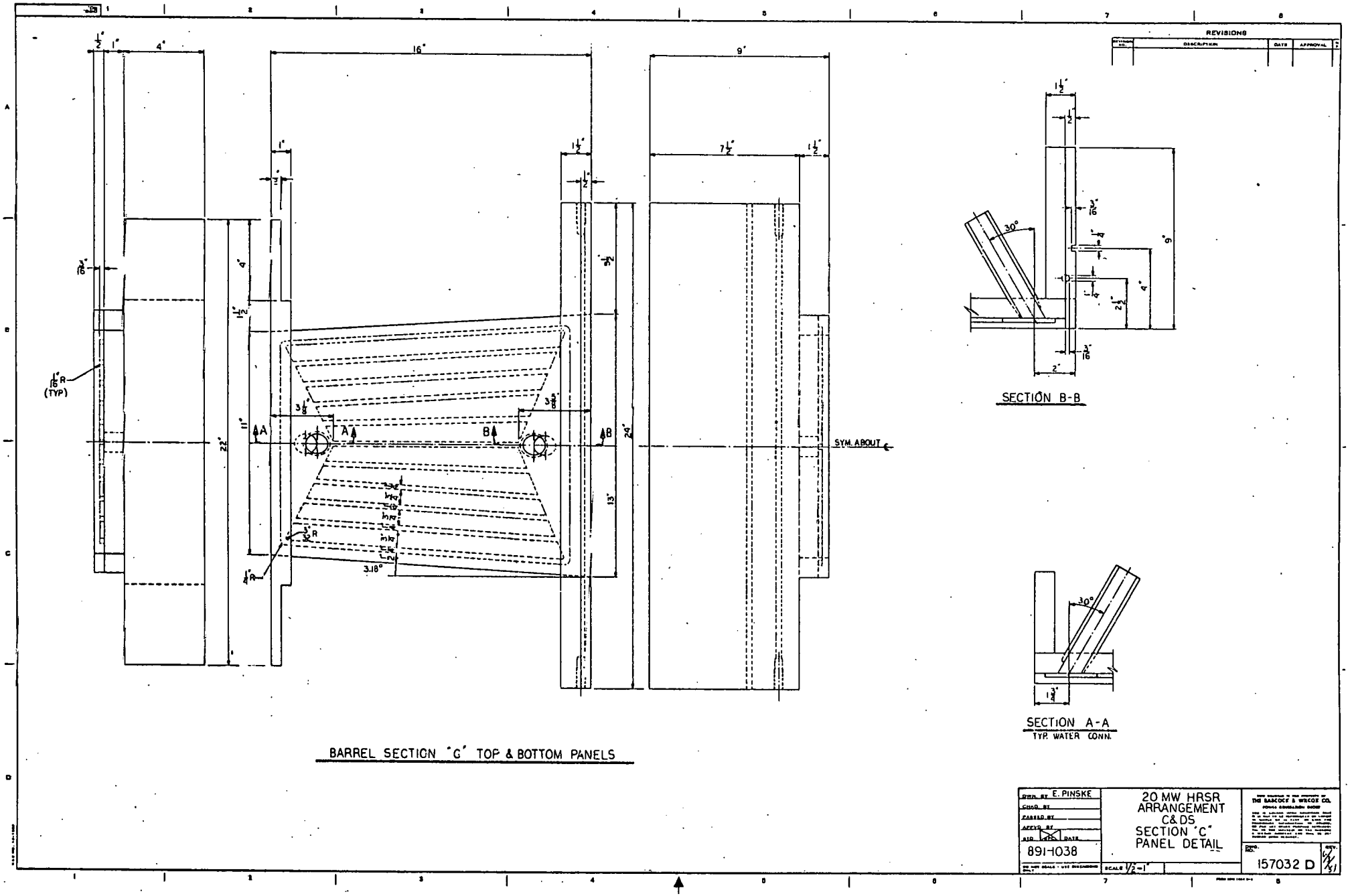

REVISIONS
DESCRIPTION
DATE
APPROVAL
SYM. ABOUT ℄
SECTION B-B
SECTION A-A
TYP. WATER CONN.
BARREL SECTION "G" TOP & BOTTOM PANELS
DWN. BY E. PINSKE
CHKD. BY
PASSED BY
APPVD. BY
STD. DATE
891-1038
20 MW HRSR
ARRANGEMENT
C&DS
SECTION "C"
PANEL DETAIL
SCALE 1/2"=1"
THE BABCOCK & WILCOX CO.
157032 D

D3

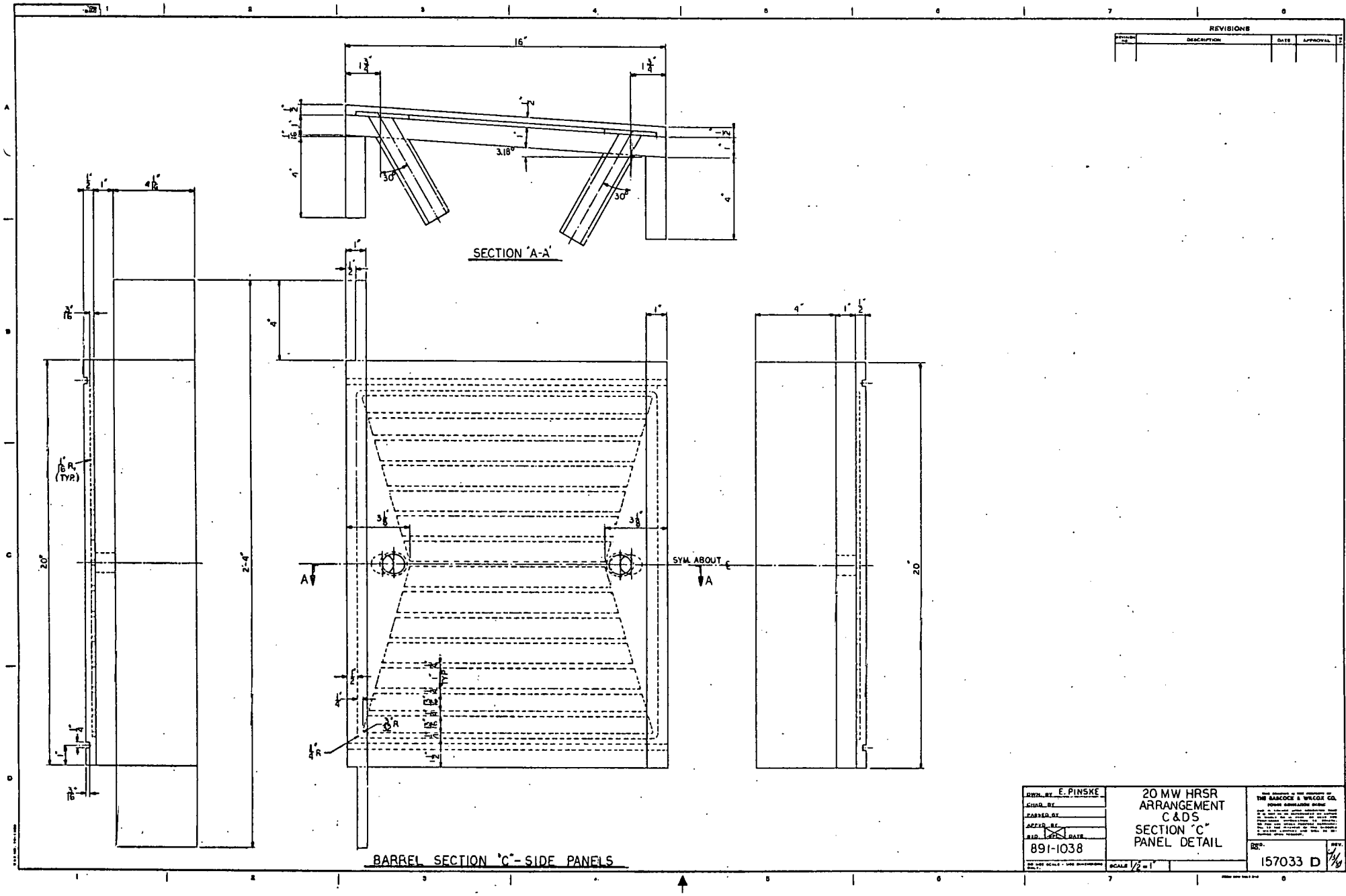
REVISIONS
DESCRIPTION
DATE
APPROVAL
SECTION 'A-A'
BARREL SECTION 'C'-SIDE PANELS
SYM. ABOUT ℄
DWN. BY E. PINSKE
CHKD. BY
PASSED BY
APPVD. BY
891-1038
20 MW HRSR
ARRANGEMENT
C&DS
SECTION "C"
PANEL DETAIL
SCALE 1/2" = 1"
THE BABCOCK & WILCOX CO.
157033 D

D4

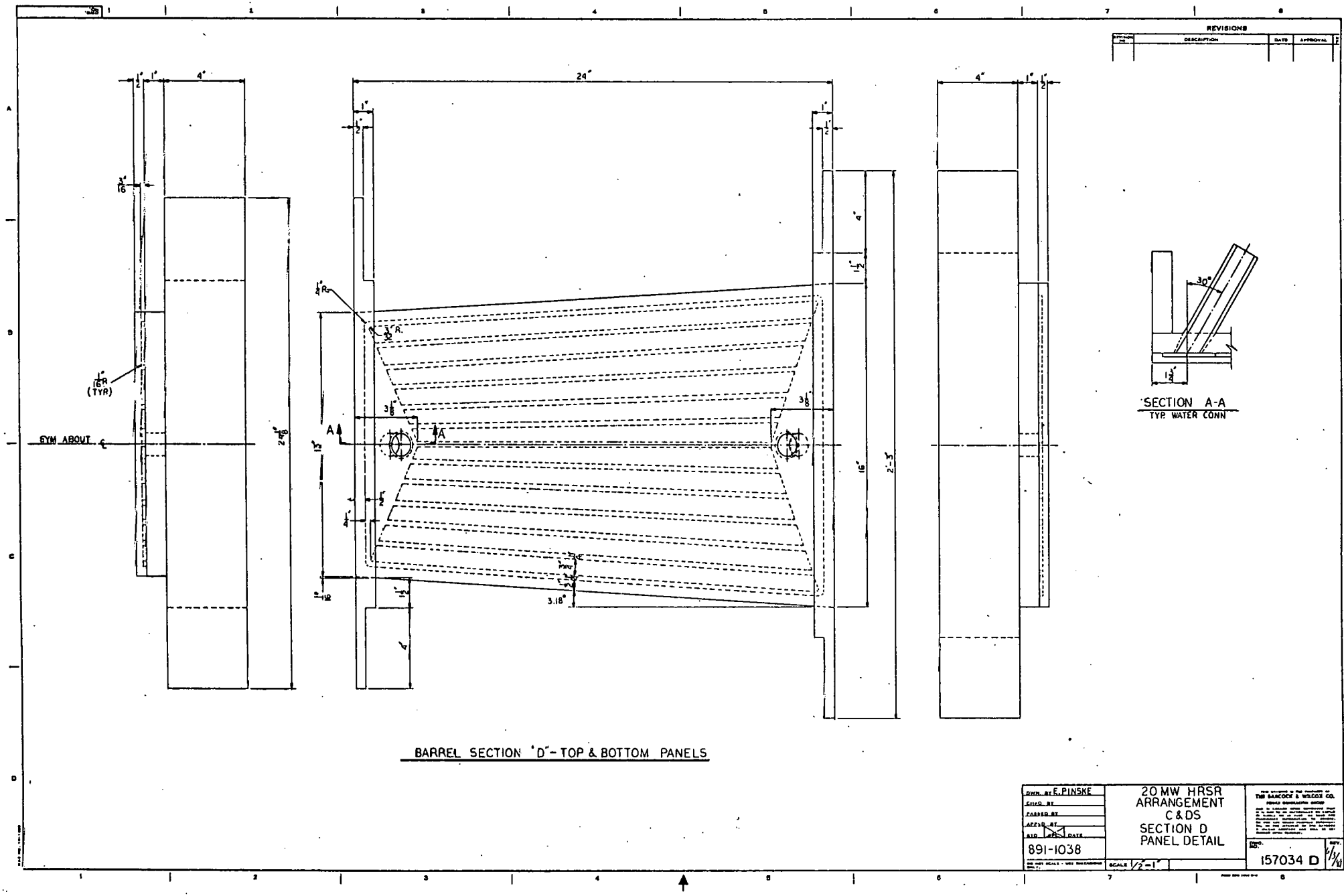
REVISIONS
DESCRIPTION
DATE
APPROVAL
24"
4"
1"
1/2"
3/16"
1/16" R (TYP)
SYM ABOUT ℄
24 1/8"
1/4" R
3/32" R
3 1/8"
A
13"
1/2"
1/4"
1/16"
1 1/2"
4"
3.18"
1 1/2"
16"
2'-3"
30°
1 3/4"
SECTION A-A
TYP. WATER CONN
BARREL SECTION "D" - TOP & BOTTOM PANELS
DWN. BY E. PINSKE
CHKD. BY
PASSED BY
APP'D BY
STD
DATE
891-1038
20 MW HRSR
ARRANGEMENT
C & DS
SECTION D
PANEL DETAIL
SCALE 1/2" = 1"
THE BABCOCK & WILCOX CO.
DWG. NO.
157034 D
REV.
1/3/81

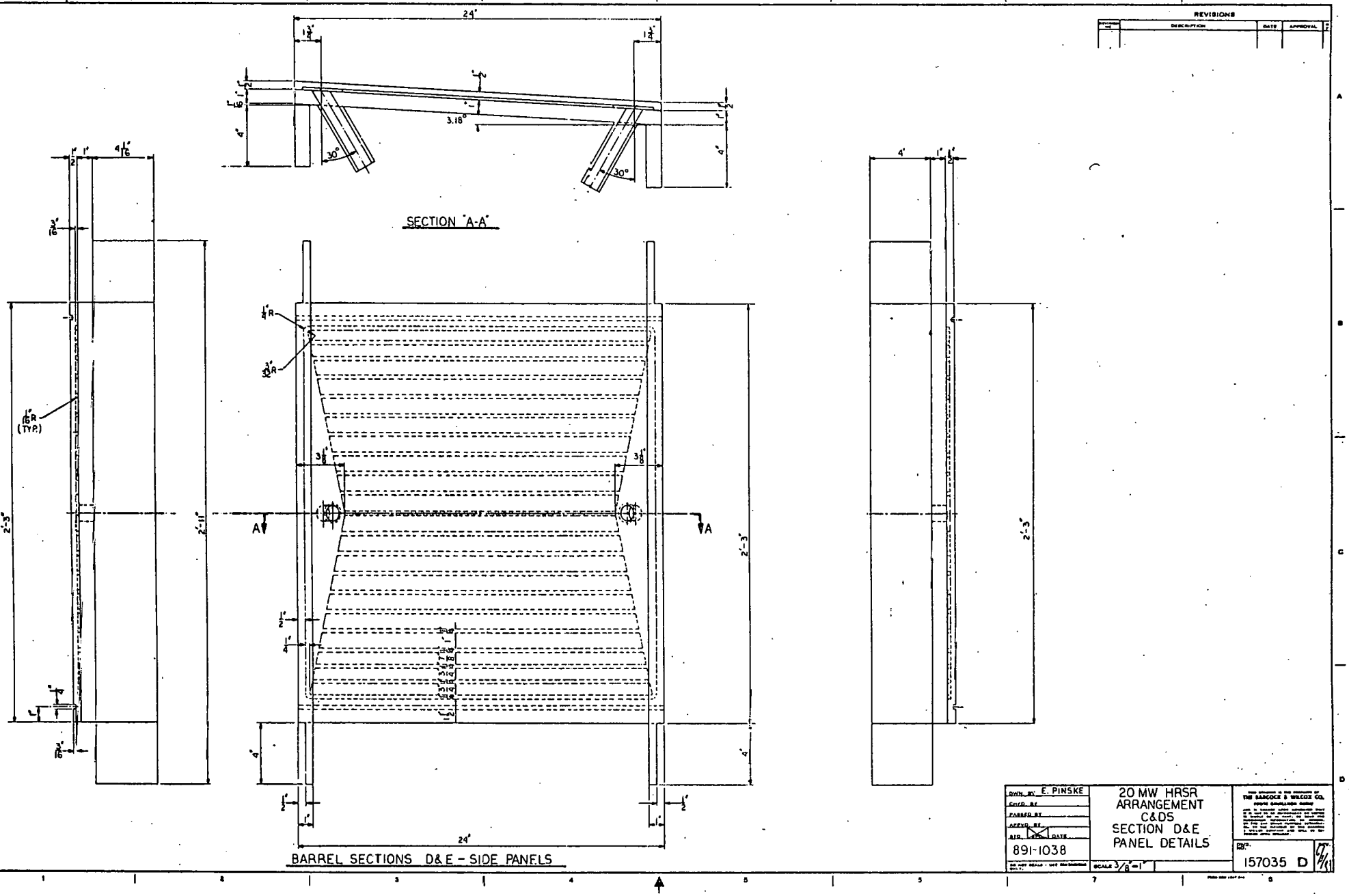
REVISIONS
DESCRIPTION
DATE
APPROVAL
24"
3.18°
30°
SECTION "A-A"
A
A
BARREL SECTIONS D&E - SIDE PANELS
DWN. BY E. PINSKE
CHK'D. BY
PASSED BY
APPVD. BY
891-1038
20 MW HRSR
ARRANGEMENT
C&DS
SECTION D&E
PANEL DETAILS
SCALE 3/8"=1"
157035 D

90

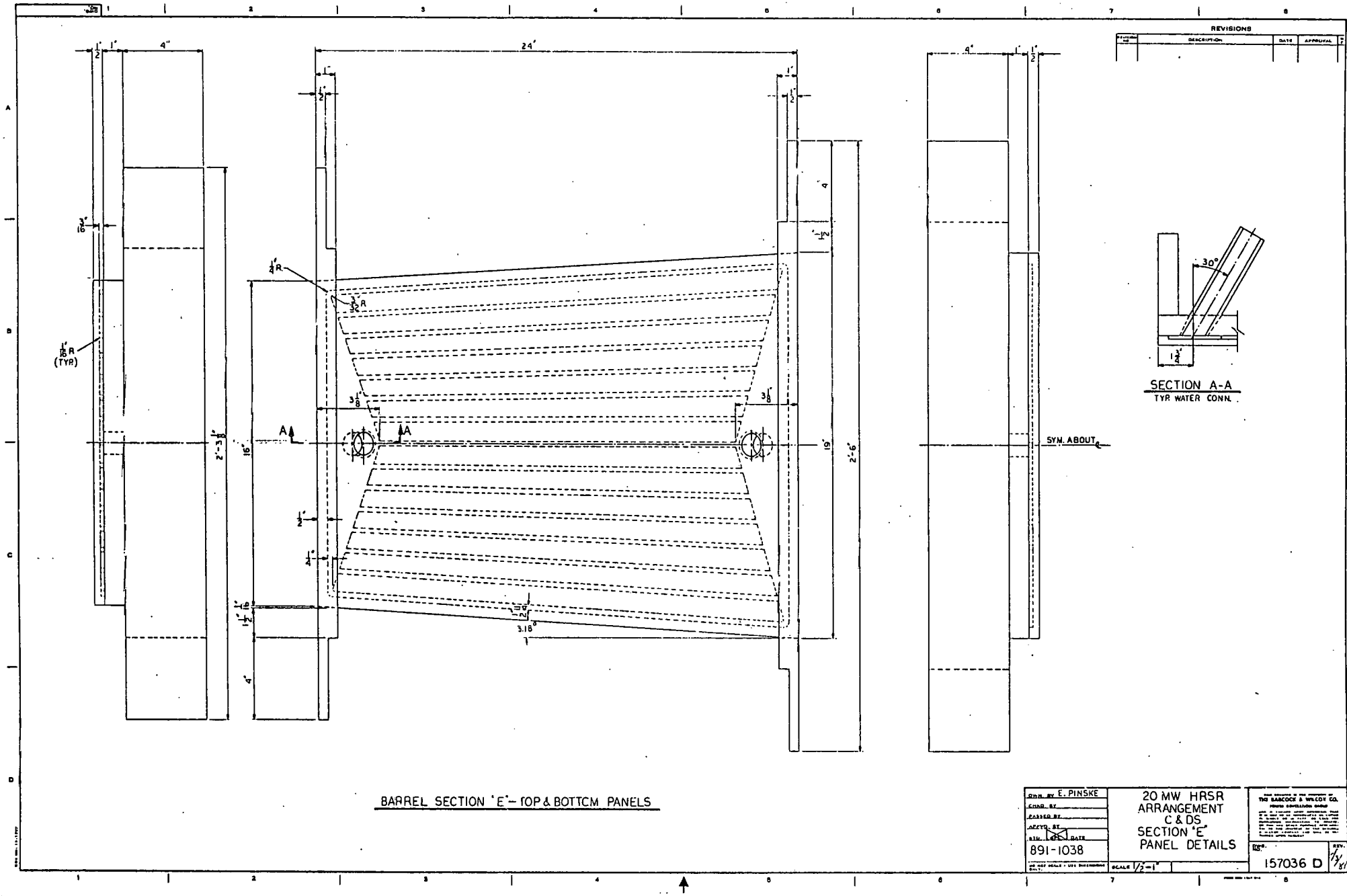
REVISIONS
DESCRIPTION
DATE
APPROVAL
24'
4"
1"
1/2"
3/16"
1/16" R (TYP)
1/4" R
3/32" R
3 1/8"
A
A
16"
2'-3 1/8"
19"
2'-6"
4"
1 1/2"
1/2"
1/4"
1 1/2"
3.18°
SYM. ABOUT ℄
30°
1 3/4"
SECTION A-A
TYP. WATER CONN.
BARREL SECTION 'E' - TOP & BOTTOM PANELS
DWN. BY E. PINSKE
CHKD. BY
PASSED BY
APPVD. BY
STD. DATE
891-1038
20 MW HRSR
ARRANGEMENT
C & DS
SECTION 'E'
PANEL DETAILS
SCALE 1/2"=1"
THE BABCOCK & WILCOX CO.
157036 D
REV.

D7

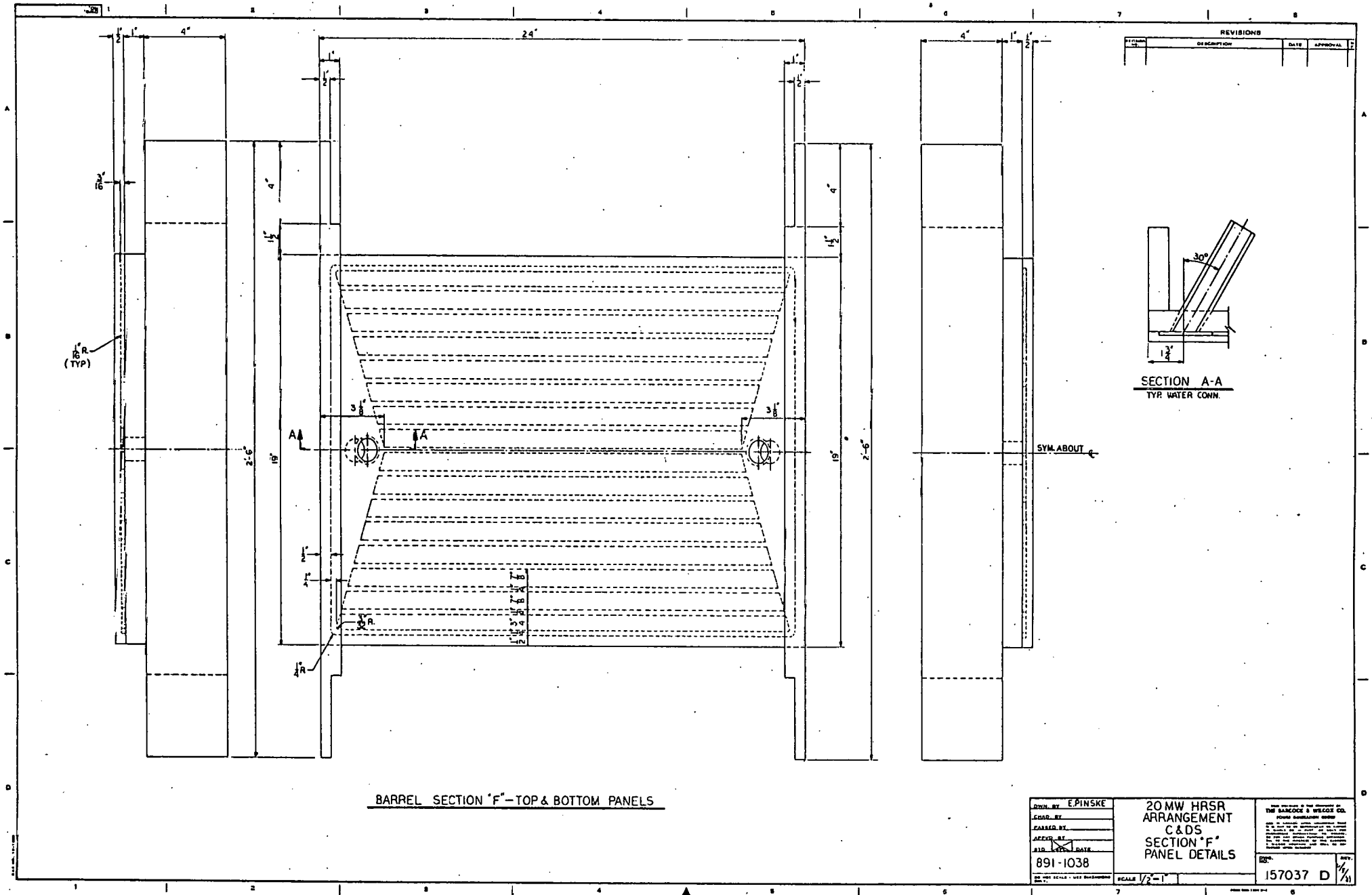

REVISIONS
DESCRIPTION
DATE
APPROVAL
24"
4"
1"
1/2"
3/16"
1/16" R. (TYP)
2'-6"
19"
3 1/8"
A
SYM. ABOUT ℄
1/4" R.
3/32" R.
30°
1 3/4"
SECTION A-A
TYP. WATER CONN.
BARREL SECTION "F"—TOP & BOTTOM PANELS
DWN. BY E.PINSKE
CHKD. BY
PASSED BY
APPVD. BY
STD. DATE
891-1038
20 MW HRSR
ARRANGEMENT
C&DS
SECTION "F"
PANEL DETAILS
SCALE 1/2"=1"
THE BABCOCK & WILCOX CO.
157037 D

D8

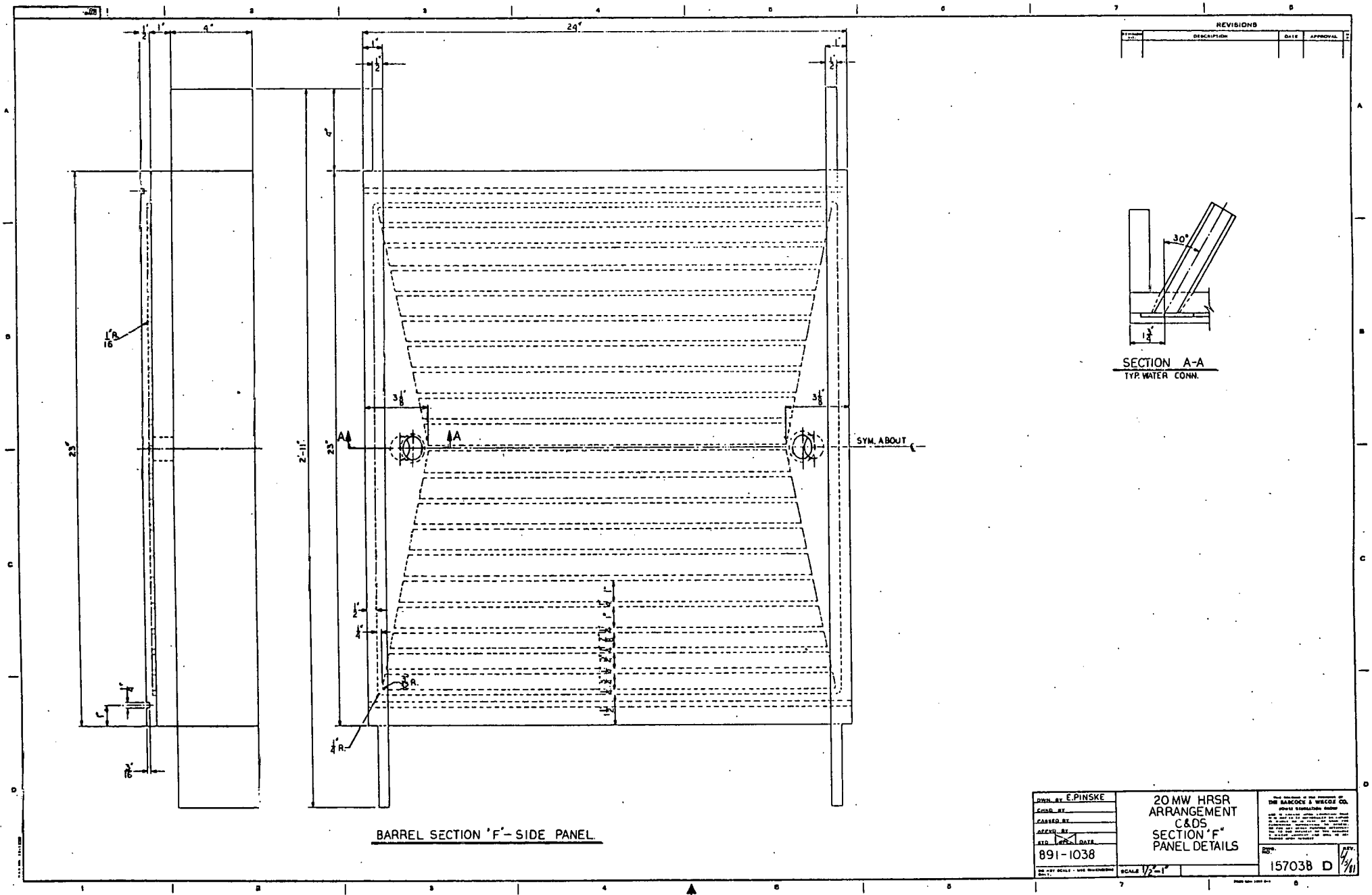

REVISIONS

DESCRIPTION	DATE	APPROVAL

SECTION A-A
TYP. WATER CONN.

DWN. BY E.PINSKE	20 MW HRSR ARRANGEMENT C&DS SECTION 'F' PANEL DETAILS	THE BABCOCK & WILCOX CO. POWER GENERATION GROUP
CHKD. BY		
PASSED BY		
APPVD. BY STD. / DATE		
891-1038	SCALE 1/2"=1"	DWG. NO. 157038 D REV. 1/5/11

D9