CONF-7810123--1

MASTER

NOTICE
This report was prepared as an account of work sponsored by the United States Government. Neither the United States nor the United States Department of Energy, nor any of their employees, nor any of their contractors, subcontractors, or their employees, makes any warranty, express or implied, or assumes any legal liability or responsibility for the accuracy, completeness or usefulness of any information, apparatus, product or process disclosed, or represents that its use would not infringe privately owned rights.

INTERNAL RADIATION DOSE CALCULATIONS WITH THE INREM II COMPUTER CODE*

D. E. Dunning, Jr., and G. G. Killough
Health and Safety Research Division
Oak Ridge National Laboratory
Oak Ridge, Tennessee 37830

Abstract

A computer code, INREM II, has been developed to calculate the internal radiation dose equivalent to organs of man which results from the intake of a radionuclide by inhalation or ingestion. Deposition and removal of radioactivity from the respiratory tract is represented by the International Commission on Radiological Protection Task Group Lung Model. A four-segment catenary model of the gastrointestinal tract is used to estimate movement of radioactive material that is ingested, or swallowed after being cleared from the respiratory tract. Retention of radioactivity in other organs is specified by linear combinations of decaying exponential functions. The formation and decay of radioactive daughters is treated explicitly, with each radionuclide in the decay chain having its own uptake and retention parameters, as supplied by the user.

The dose equivalent to a target organ is computed as the sum of contributions from each source organ in which radioactivity is assumed to be situated. This calculation utilizes a matrix of dosimetric S-factors (rem/μCi-day) supplied by the user for the particular choice

*Research sponsored by the Division of Safeguards, Fuel Cycle, and Environmental Research, U.S. Nuclear Regulatory Commission under Interagency Agreement DOE 40-550-75 with the U.S. Department of Energy under contract W-7405-eng-26 with Union Carbide Corporation.

By acceptance of this article, the publisher or recipient acknowledges the U.S. Government's right to retain a nonexclusive, royalty-free license in and to any copyright covering the article.

of source and target organs. Output permits the evaluation of components of dose from cross-irradiations when penetrating radiations are present.

INREM II has been utilized with current radioactive decay data and metabolic models to produce extensive tabulations of dose conversion factors for a reference adult for approximately 150 radionuclides of interest in environmental assessments of light-water-reactor fuel cycles. These dose conversion factors represent the 50-year dose commitment per microcurie intake of a given radionuclide for 22 target organs including contributions from specified source organs and surplus activity in the rest of the body. These tabulations are particularly significant in their consistent use of contemporary models and data and in the detail of documentation.

Introduction

The INREM II computer code (Killough et al., 1978a) has been developed at Oak Ridge National Laboratory (ORNL) to calculate the internal radiation dose equivalent to organs of a reference human adult due to inhalation or ingestion of a radionuclide. The code utilizes contemporary dynamic models to estimate the residence of activity (μCi-day) in those source organs for which retention data are available, and combines these with appropriate dosimetric S-factors (rem/μCi-day) to calculate dose equivalent to given target organs. This approach permits calculation of the contribution of cross-irradiations to a target organ's total dose.

The average dose equivalent (rem) accrued by a target organ X due to radionuclide species i partitioned among a series of mutually exclusive source organs Y_1, Y_2,....Y_m, may be expressed by the equation

$$D_i(X) = \sum_{k=1}^{m} S_i\ (X \leftarrow Y_k) \int_0^T A_{ik}(t)\ dt,$$

where $A_{ik}(t)$ is the activity of radionuclide i in organ Y_k at time t, $S_i(X \leftarrow Y_k)$ is the dosimetric S-factor representing the average dose equivalent rate to target organ X due to 1 μCi of radionuclide i uniformly distributed in the source organ of index k, and T is the time of integration (usually taken to be 50 years). Each integral provides a measure (μCi-days) of the total energy emitted by decay of the radionuclide in the organ.

The S-factors have been computed according to methods described by Snyder et al. (1974). These methods are implemented in the computer code SFACTOR (Dunning et al., 1977), which is used to provide input data for INREM II. The details of dosimetry incorporated into the calculation of S-factors are beyond the scope of this paper. We note only that contributions from alpha, alpha recoil, electrons (including β^+, β^-, Auger and internal conversion electrons), photons (including X rays), and radiations from spontaneous fission are each considered explicitly whenever they occur.

Model Description

Intake of a radionuclide is assumed to occur by inhalation or ingestion. A schematic representation of radionuclide movement among

various conceptualized compartments of the body is shown in Fig. 1. Upon absorption into the blood, the radionuclide is distributed among other organs in accordance with fractional uptake coefficients and metabolic information supplied as input data. Retention functions are specified in the form of a series of decaying exponential terms for each source organ for which such data are available. Those organs of the body which are not accounted for by specific retention functions are placed in a category denoted as "OTHER," within which the remaining activity is assumed to be uniformly distributed.

The International Commission on Radiological Protection (ICRP) Task Group Lung Model (Morrow et al. 1966) is used to estimate the deposition and retention of inhaled particulates in the respiratory tract, and their subsequent absorption by blood and clearance into the gastrointestinal (GI) tract. The clearance parameters shown in Fig. 2 were adapted from ICRP Publication 19 (1972). The three clearance classes D, W, and Y correspond to rapid, intermediate, and slow removal, respectively, of material deposited in the respiratory passages. The four major regions of the respiratory tract identified in the model are the nasopharynx (N-P), tracheobronchial tree (T-B), pulmonary region (P), and respiratory lymph (L). The fractional deposition of inhaled particulate material among the nasopharyngeal, tracheobronchial and pulmonary regions is specified by the fractions D_3, D_4, and D_5, which are functions of the activity median aerodynamic diameter (AMAD) of the particle. The values of these fractions shown in Fig. 2 correspond to an AMAD of 1 micron.

A four-segment catenary model of the gastrointestinal tract shown in Fig. 3 is used to model the dynamics of radionuclides which are ingested, or swallowed after clearance from the respiratory system. Exponential outflow of activity from each segment into the next, or out of the system, is assumed. The outflow rate coefficients used in these calculations have been derived from transit times of Eve (1966). Absorption into blood may take place from any segment of the GI tract; in practice, however, absorption is frequently assumed to occur only from the small intestine.

When a radionuclide taken into the body decays to produce one or more radioactive daughters, the formation and subsequent decay of these daughters is superimposed upon the dynamics of the translocation and retention of the parent within the body. The daughters may have different chemical and physical properties from those of the parent and may be metabolized differently in the body. Uptake and retention parameters are specified as input data for each radionuclide species in the decay chain, so that each can be cleared from the lungs, absorbed from the GI tract, and taken up and retained by other organs according to its individual characteristics.

Application

An example of the output produced by INREM II is shown in Figs. 4-6. The example shown here is the $^{90}Sr \rightarrow {}^{90}Y$ decay chain. Physical and metabolic data for each radionuclide are displayed first, as shown in Fig. 4. Physical data include the radiological half-life and branching ratios for each species in the decay chain.

Fractional absorption coefficients and retention models for each available source organ are then presented, followed by matrices of the appropriate S-factors.

A dose matrix is calculated for each case of intake of a given radionuclide by inhalation or ingestion in accordance with a specified intake rate function; this intake rate function is specified by the user and may represent acute or chronic exposure. In Fig. 5 we show a case representing an acute intake by initial inhalation of 1 μCi of ^{90}Sr and the subsequent 50-year dose commitment to each of a selected list of target organs. A fractional absorption coefficient from the GI tract to blood is specified for each nuclide. The AMAD of the parent and a respiratory clearance category for each radionuclide is indicated when intake is by the inhalation pathway. An estimate of the dose equivalent accrued by each target organ from activity in each source organ is presented, as well as the total dose to each organ. This format enables the reader to determine the relative importance of cross-irradiations in the total dose. The selection of source and target organs to be considered is limited only by the availability of the required data for each organ. The list of target organs shown in Fig. 5 has been found to be a useful one, and has been consistently utilized in our tabulations of dose conversion factors to date. The choice of source organs is a function of the available metabolic data and may vary with each element.

INREM II also produces a table which depicts the relative contribution of each species in the decay series to the total dose

commitment to each organ. This feature has been found to be very useful in identifying the critical contributors to dose within a given decay chain. In Fig. 5, for example, it is apparent that the dose to most organs is delivered predominantly by the ^{90}Y daughter for that case.

Output produced for a similar case where intake is by ingestion is shown in Fig. 6. Estimates of dose commitment are again based upon an acute intake of 1 μCi of ^{90}Sr. The INREM II code has the capability of listing any pertinent commentary material following the final case. In Fig. 6 this feature is used to indicate the source of the metabolic data for the calculations.

In its present form, the INREM II code has been utilized to compute comprehensive tabulations of internal dose conversion factors. The term "dose conversion factor" is used here to describe the 50-year dose commitment to a given organ resulting from the acute intake of a unit quantity of a given radionuclide species. To date, tabulations of dose conversion factors for approximately 150 radionuclides of potential interest in the nuclear fuel cycle have been produced in two volumes of an ORNL report. An initial volume, containing information for radionuclides with mass numbers less than 150, was published recently (Killough et al., 1978), and a second volume is forthcoming with coverage of nuclides with mass numbers greater than 150 (Dunning et al., in preparation). In every case, a careful assessment of the physical and metabolic data available for the calculations was performed, and those judged to be the best available were utilized.

In these tabulations of dose conversion factors, summary tables similar to the one shown in Fig. 7 are presented, in addition to the detailed output described in Figs. 4-6. Each table is specific to intake by either inhalation or ingestion, and presents a matrix of total dose conversion factors for specified target organs for various radionuclides. The respiratory clearance class (D, W, or Y, where applicable) and the assumed value of AMAD for the parent nuclide are specified for inhalation cases in the columns labeled "SOL" and "AMAD" respectively. The GI-tract-to-blood absorption fraction, "F1", is given for either form of intake. These parameters should help the reader to identify a case which is applicable to his specific requirements. For many applications this type of tabulation may prove adequate and more convenient than the detailed presentation.

Conclusion

The work described here is significant in many respects. Contemporary methodologies and dynamic models have been implemented in the SFACTOR and INREM II computer codes for estimation of internal dose. These codes have been utilized, along with current physical and metabolic data, to generate comprehensive tabulations of dose conversion factors which are internally consistent in computational methodology. These tabulations have been designed for maximum practical utility in assessments of releases from nuclear fuel-cycle facilities, with thorough documentation of all input parameters and assumptions. This consistency and complete documentation is of paramount importance for credibility in assessment and regulatory activities.

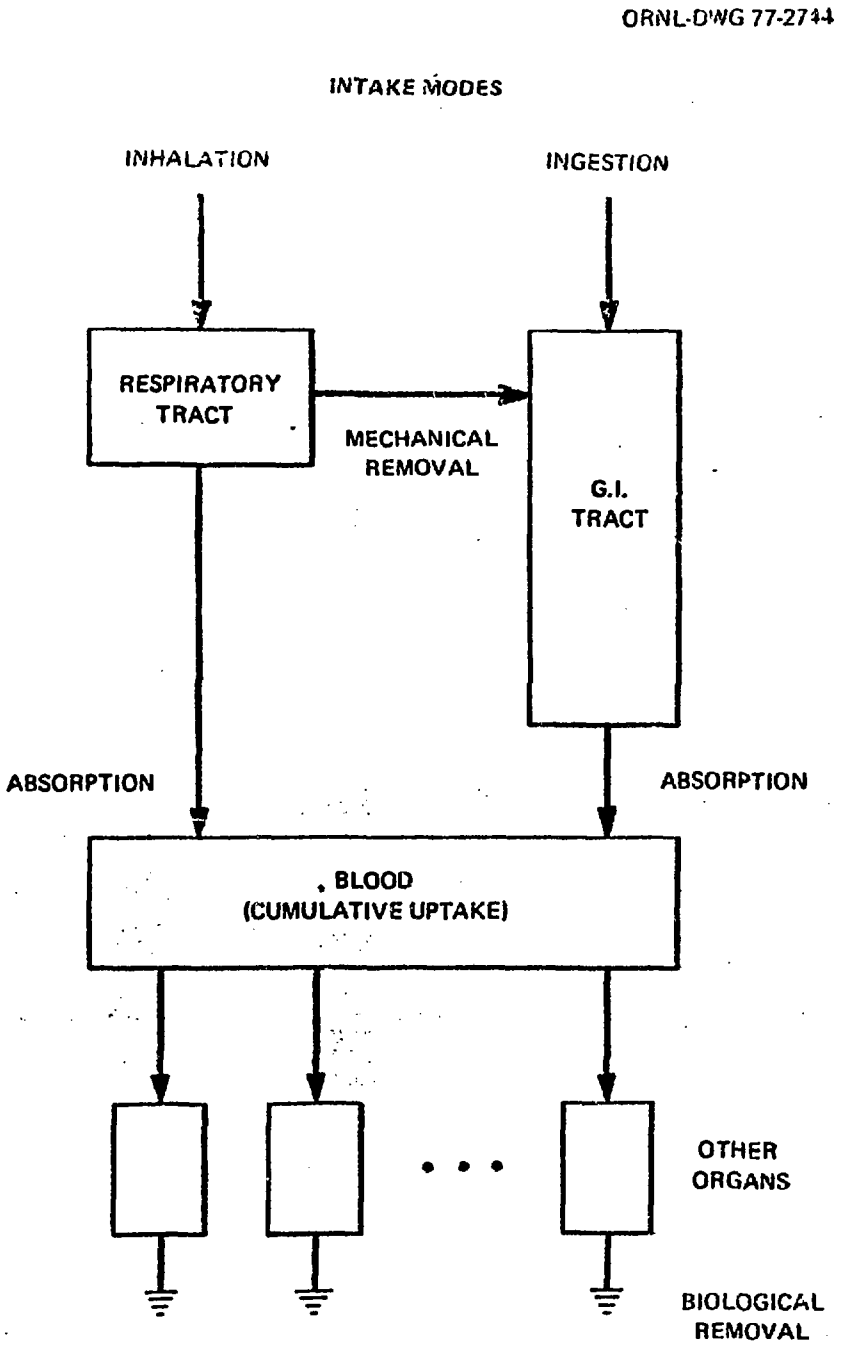

Figure 1. Schematic representation of radioactivity movement as modeled by the INREM II code.

ORNL-DWG 77-2743

COMPARTMENT		CLASS					
		D		W		Y	
		T	F	T	F	T	F
N-P	a	0.01	0.5	0.01	0.1	0.01	0.01
(D_3 = 0.30)	b	0.01	0.5	0.4	0.9	0.4	0.99
T-B	c	0.01	0.95	0.01	0.5	0.01	0.01
(D_4 = 0.08)	d	0.2	0.05	0.2	0.5	0.2	0.99
	e	0.5	0.8	50	0.15	500	0.05
P	f	n.a.	n.a.	1.0	0.4	1.0	0.4
(D_5 = 0.25)	g	n.a.	n.a.	50	0.4	500	0.4
	h	0.5	0.2	50	0.05	500	0.15
L	i	0.5	1.0	50	1.0	1000	0.9

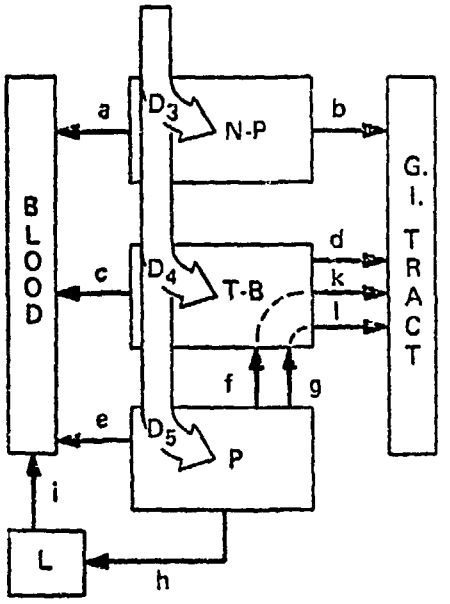

Figure 2. The ICRP Task Group Lung Model for particulates (Morrow et al., 1966). The columns D, W, and Y correspond, respectively, to rapid, intermediate, and slow clearance of the inspired material. The symbols T and F denote the biological half-time (days) and coefficient, respectively, of a term in the appropriate retention function. The values shown for D_3, D_4, and D_5 correspond to activity median aerodynamic diameter (AMAD) = 1 μm.

ORNL-DWG 77-2742R

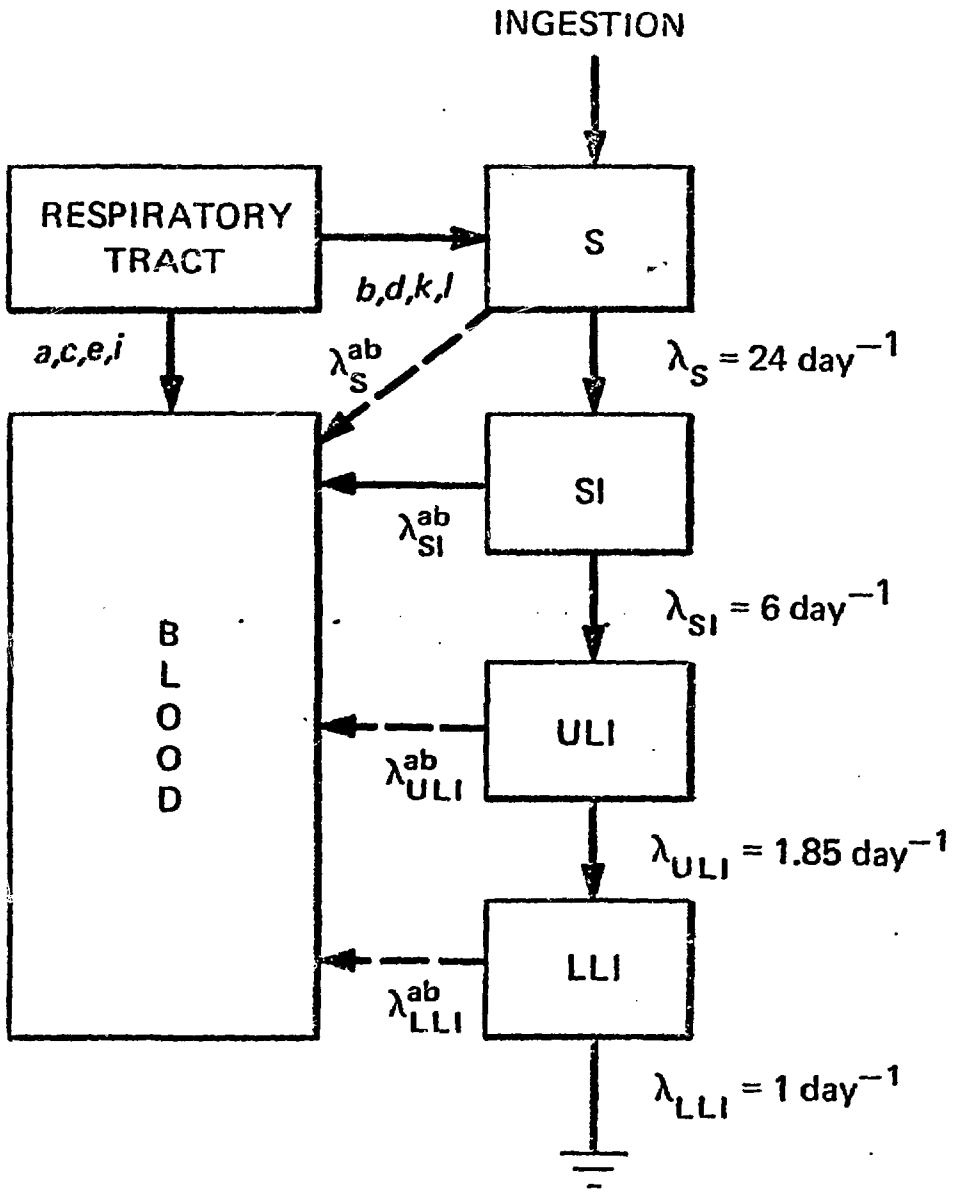

Figure 3. Schematic representation of radioactivity movement among respiratory tract, GI tract, and blood, as simulated by INREM II.

RADIONUCLIDE: SR-90

PHYSICAL AND METABOLIC PARAMETERS FOR 20% METABOLICALLY SIGNIFICANT PROGENY:

NUCLIDE	RADIOACTIVE HALF-LIFE (DAYS)
SR-90	1.0433E 04
Y-90	2.670

BRANCHING RATIO: FROM SR-90 TO Y-90 FRACTION 1.000

ORGAN ABSORBED	NUCLIDE	BLOOD TRANSFER FRACTION PER-PRIME	COMPARTMENT DEPOSITION FRACTION	COMPARTMENT BIOLOGICAL HALF-LIFE (DAYS)
	SR-90	1.00	-0.525	1.19
			1.01	3.33
			-6.130E-02	5.70
			9.330E-02	9.71.
			8.000E-02	6.000E 33
	Y-90	1.00	1.00	8.000E 33
BONE	SR-90	1.00	-3.525	1.17
			3.424	3.33
			-6.130E-02	5.70
			8.230E-02	9.71.
			8.000E-02	6.000E 33
	Y-90	3.500	1.00	8.000E 33
LIVER	SR-90	6.050E-02	0.835	3.33
			1.100E-02	9.71.
	Y-90	3.150	1.00	8.000E 33
OTHER	SR-90	0.950	0.835	3.33
			1.100E-02	9.71.
	Y-90	3.350	1.00	8.000E 33

S FACTORS (REM/MICROCURIE-DAY) FOR SR-90

TARGET ORGANS	SOURCE ORGANS: LUNGS	RES LYM	S CONT	SI CONT	ULI CONT	LLI CONT	BONE	LIVER	OTHER
LUNGS	0.108E-01	0.108E-01	0.0	0.0	0.0	0.0	0.0	0.0	0.0
RES LYM	0.130E-01	0.268E 00	0.0	0.0	0.0	0.0	0.0	0.0	0.0
S WALL	0.0	0.0	0.203E-01	0.0	0.0	0.0	0.0	0.0	0.0
SI WALL	0.0	0.0	0.0	0.125E-01	0.0	0.0	0.0	0.0	0.0
ULI WALL	0.0	0.0	0.0	0.0	0.279E-01	0.0	0.0	0.0	0.0
LLI WALL	0.0	0.0	0.0	0.0	0.0	0.371E-01	0.0	0.0	0.0
T BODY	0.143E-03	0.143E-03	0.429E-04	0.114E-03	0.817E-04	0.848E-04	0.143E-03	0.143E-03	0.142E-03
ADREN	0.0	0.0	0.0	0.0	0.0	0.0	0.0	0.0	0.201E-03
BL WALL	0.0	0.0	0.0	0.0	0.0	0.0	0.0	0.0	0.185E-03
KIDNEYS	0.0	0.0	0.0	0.0	0.0	0.0	0.0	0.0	0.291E-03
LIVER	0.0	0.0	0.0	0.0	0.0	0.0	0.0	0.556E-02	0.0
OVARIES	0.0	0.0	0.0	0.0	0.0	0.0	0.0	0.0	0.291E-03
PANCREAS	0.0	0.0	0.0	0.0	0.0	0.0	0.0	0.0	0.291E-03
BONE	0.0	0.0	0.0	0.0	0.0	0.0	0.186E-02	0.0	0.201E-04
R MAR	0.0	0.0	0.0	0.0	0.0	0.0	0.487E-03	0.0	0.220E-03
Y MAR	0.0	0.0	0.0	0.0	0.0	0.0	0.0	0.0	0.291E-03
ENDOST	0.0	0.0	0.0	0.0	0.0	0.0	0.147E-02	0.0	0.150E-03
SPLEEN	0.0	0.0	0.0	0.0	0.0	0.0	0.0	0.0	0.291E-03
TESTES	0.0	0.0	0.0	0.0	0.0	0.0	0.0	0.0	0.290E-03
THYMUS	0.0	0.0	0.0	0.0	0.0	0.0	0.0	0.0	0.291E-03
THYROID	0.0	0.0	0.0	0.0	0.0	0.0	0.0	0.0	0.291E-03
UTERUS	0.0	0.0	0.0	0.0	0.0	0.0	0.0	0.0	0.291E-03

S FACTORS (REM/MICROCURIE-DAY) FOR Y-90

TARGET ORGANS	SOURCE ORGANS: LUNGS	RES LYM	S CONT	SI CONT	ULI CONT	LLI CONT	BONE	LIVER	OTHER
LUNGS	0.416E-01	0.479E-01	0.656E-10	0.170E-15	0.217E-15	0.764E-17	0.362E-10	0.388E-09	0.516E-39
RES LYM	0.470E-01	0.318E 01	0.656E-10	0.170E-15	0.217E-15	0.764E-17	0.362E-10	0.388E-09	0.516E-09
S WALL	0.118E-00	0.118E-00	0.953E-01	0.271E-03	0.423E-09	0.171E-10	0.199E-10	0.529E-10	0.142E-39
SI WALL	0.537E-15	0.537E-15	0.457E-10	0.535E-31	0.557E-09	0.250E-08	0.245E-10	0.305E-10	0.188E-39
ULI WALL	0.438E-15	0.438E-15	0.186E-09	0.377E-07	0.104E-03	0.274E-09	0.331E-10	0.505E-10	0.365E-39
LLI WALL	0.207E-16	0.207E-16	0.333E-11	0.460E-08	0.450E-07	0.176E-03	0.998E-10	0.372E-15	0.155E-09
T BODY	0.680E-03	0.680E-03	0.204E-03	0.544E-03	0.389E-03	0.403E-03	0.680E-03	0.680E-03	0.677E-03
ADREN	0.173E-39	0.173E-39	0.131E-11	0.268E-13	0.204E-12	0.594E-15	0.116E-09	0.498E-09	0.133E-02
BL WALL	0.424E-22	0.448E-22	0.152E-15	0.326E-11	0.224E-11	0.125E-39	0.371E-12	0.648E-16	0.691E-33
KIDNEYS	0.101E-11	0.108E-11	0.973E-11	0.165E-10	0.657E-11	0.241E-	0.415E-10	0.167E-09	0.138E-32
LIVER	0.276E-09	0.276E-09	0.294E-10	0.491E-10	0.515E-10	0.432E-15	0.213E-10	0.269E-01	0.163E-09
OVARIES	0.441E-16	0.641E-16	0.196E-13	0.227E-09	0.303E-09	0.710E-10	0.165E-10	0.132E-13	0.138E-32
PANCREAS	0.176E-10	0.126E-13	0.212E-09	0.750E-13	0.995E-12	0.217E-13	0.537E-10	0.232E-09	0.138E-02
BONE	0.113E-09	0.113E-39	0.195E-10	0.804E-10	0.417E-10	0.196E-09	0.971E-32	0.744E-10	0.118E-33
R MAR	0.124E-09	0.124E-39	0.163E-10	0.135E-39	0.175E-09	0.818E-09	0.330E-32	0.715E-10	0.805E-03
Y MAR	0.140E-09	0.140E-09	0.211E-10	0.112E-09	0.405E-10	0.273E-09	0.752E-08	0.111E-09	0.138E-02
ENDOST	0.113E-09	0.113E-03	0.155E-10	0.104E-10	0.417E-10	0.198E-39	3.670E-02	0.744E-10	0.603E-03
SPLEEN	0.153E-09	0.153E-09	0.820E-09	0.113E-11	0.943E-12	0.142E-12	0.495E-10	0.842E-13	0.138E-02
TESTES	0.100E-21	0.105E-21	0.343E-13	0.309E-15	0.470E-15	0.412E-11	0.411E-12	0.173E-10	0.138E-02
THYMUS	0.143E-10	0.468E-13	0.218E-15	0.190E-19	0.292E-19	0.418E-31	0.591E-10	0.293E-14	0.138E-02
THYROID	0.423E-12	0.423E-13	0.418E-19	0.204E-23	0.293E-23	0.654E-35	0.183E-10	0.200E-18	0.138E-32
UTERUS	0.225E-10	0.205E-15	0.418E-14	0.530E-33	0.227E-13	0.435E-10	0.924E-14	0.191E-14	0.138E-31

Figure 4. INREM II output: general physical and metabolic data for ^{90}Sr.

CASE 1.. INHALATION

INHALATION INTAKE RATE FUNCTION (MICROCURIES/DAY)

FROM (DAYS)	TO (DAYS)	RATE
0.0	1.00	1.00
1.00	1.825E 04	0.0

AMAD (MICRON).. 1.00 D3 =0.310 D4 =8.000E-02 D5 =0.249

	SOLUBILITY CLASS	G.I. UPTAKE FRACTIONS STOMACH	S INT	U L INT	L L INT
SR-90	D	0.0	0.200	0.0	0.0
Y-90	W	0.0	1.000E-04	0.0	0.0

DOSE EQUIVALENT (REM)

SOURCE	LUNGS	RES LYM	S CONT	SI CONT	ULI CONT	LLI CONT	BONE	LIVER	OTHER	TOTAL
TARGET										
LUNGS	7.884E-03	2.004E-03	4.438E-14	6.181E-19	3.990E-18	4.061E-19	1.026E-08	1.772E-10	4.524E-09	9.888E-03
RES LYM	7.884E-03	0.134	4.438E-14	6.181E-19	3.990E-18	4.061E-19	1.026E-08	1.772E-10	4.524E-09	0.142
S WALL	1.492E-11	4.077E-12	1.970E-04	9.411E-13	7.760E-12	9.090E-13	5.640E-09	2.415E-11	1.240E-09	1.970E-04
SI WALL	6.731E-17	1.855E-17	2.889E-14	4.716E-04	1.024E-10	1.590E-10	6.944E-09	1.393E-11	1.642E-09	4.716E-04
ULI WALL	1.055E-16	2.882E-17	1.258E-13	1.295E-10	3.557E-03	1.100E-10	9.382E-09	2.306E-11	3.188E-09	3.557E-03
LLI WALL	2.618E-18	7.152E-19	3.606E-15	1.629E-11	8.440E-12	1.407E-02	2.806E-08	1.696E-16	1.354E-09	1.407E-02
T BODY	1.127E-04	2.863E-05	4.222E-07	4.306E-06	1.068E-05	3.221E-05	0.233	3.757E-04	7.152E-03	0.241
ADREN	2.150E-11	5.874E-12	1.306E-15	9.306E-17	3.751E-16	2.913E-17	3.345E-08	2.274E-10	1.459E-02	1.459E-02
BL WALL	6.171E-22	1.686E-22	1.076E-19	1.125E-14	4.303E-14	6.645E-12	1.052E-10	2.959E-17	7.301E-03	7.301E-03
KIDNEYS	1.366E-13	3.732E-14	5.229E-15	5.856E-14	1.208E-13	1.281E-14	1.176E-08	7.625E-11	1.459E-02	1.459E-02
LIVER	3.617E-11	9.882E-12	1.989E-14	1.670E-13	9.470E-13	2.297E-17	6.037E-09	1.453E-02	1.423E-09	1.463E-02
OVARIES	8.106E-20	2.215E-20	1.312E-17	7.640E-12	5.516E-11	3.774E-10	5.329E-09	4.657E-15	1.459E-02	1.459E-02
PANCREAS	1.593E-12	4.353E-13	1.438E-12	2.639E-15	1.703E-14	1.154E-15	1.522E-08	9.223E-11	1.459E-02	1.459E-02
BONE	1.429E-11	3.904E-12	1.049E-14	2.792E-13	7.668E-13	1.042E-11	3.00	3.397E-11	1.206E-03	3.00
R MAR	1.566E-11	4.284E-12	1.103E-14	1.163E-12	3.210E-12	4.345E-11	1.00	3.265E-11	9.738E-03	1.10
Y MAR	1.846E-11	5.345E-12	1.435E-14	3.869E-13	1.076E-12	1.651E-11	2.131E-06	5.068E-11	1.459E-02	1.460E-02
ENDOST	1.429E-11	3.904E-12	1.049E-14	2.792E-13	7.668E-13	1.042E-11	2.19	3.397E-11	8.323E-03	2.20
SPLEEN	1.935E-11	5.286E-12	1.394E-13	3.924E-15	1.734E-14	7.549E-15	2.537E-08	3.844E-14	1.459E-02	1.459E-02
TESTES	1.340E-25	3.662E-26	2.354E-23	1.073E-18	8.642E-18	2.190E-13	1.165E-10	7.899E-21	1.458E-02	1.458E-02
THYMUS	1.062E-11	2.902E-12	1.475E-19	6.806E-23	5.369E-22	2.222E-23	1.108E-08	1.338E-15	1.459E-02	1.459E-02
THYROID	5.349E-14	1.462E-14	2.828E-23	7.084E-27	5.388E-26	3.689E-27	5.130E-09	9.406E-20	1.459E-02	1.459E-02
UTERUS	2.592E-20	7.383E-21	3.504E-18	1.736E-12	4.174E-13	2.312E-12	2.619E-10	6.894E-16	1.459E-02	1.459E-02

PERCENT DOSE EQUIVALENT..

NUCLIDE	SR-90	Y-90
TARGET		
LUNGS	22.5	77.5
RES LYM	18.3	81.7
S WALL	67.3	32.7
SI WALL	56.2	43.8
ULI WALL	44.2	55.8
LLI WALL	33.5	66.5
T BODY	17.4	82.6
ADREN	17.4	82.6
BL WALL	17.3	82.7
KIDNEYS	17.4	82.6
LIVER	17.3	82.7
OVARIES	17.4	82.6
PANCREAS	17.4	82.6
BONE	17.6	82.4
R MAR	12.7	87.3
Y MAR	17.4	82.6
ENDOST	19.0	81.0
SPLEEN	17.4	82.6
TESTES	17.4	82.6
THYMUS	17.4	82.6
THYROID	17.4	82.6
UTERUS	17.4	82.6

Figure 5. INREM II output: case-specific information for acute inhalation of 1 μCi of ^{90}Sr.

CASE 2.. INGESTION

INGESTION INTAKE RATE FUNCTION (MICROCURIES/DAY)

FROM (DAYS)	TO (DAYS)	RATE
0.0	1.00	1.00
1.00	1.825E 04	0.0

INGESTION TRANSFER FRACTIONS (G. I. TRACT TO BLOOD)

	SR-90	Y-90
STOMACH	0.0	0.0
S INT	0.200	1.003E-04
U L INT	0.0	0.0
L L INT	0.0	0.0

DOSE EQUIVALENT (REM)

SOURCE	S CONT	SI CONT	ULI CONT	LLI CONT	BONE	LIVER	OTHER	TOTAL
TARGET								
LUNGS	2.925E-14	1.288E-18	1.607E-17	2.089E-18	4.009E-09	6.910E-11	1.767E-09	5.845E-09
RES LYM	2.925E-14	1.288E-18	1.607E-17	2.089E-18	4.009E-09	6.910E-11	1.767E-09	5.845E-09
S WALL	8.758E-04	1.962E-12	3.125E-11	4.875E-12	2.204E-09	9.428E-12	4.844E-10	8.758E-0
SI WALL	1.904E-14	2.397E-03	4.124E-10	8.174E-10	2.713E-09	5.432E-12	6.413E-10	2.097E-03
ULI WALL	8.293E-14	2.700E-10	1.788E-02	5.659E-10	3.665E-09	8.994E-12	1.245E-09	1.788E-02
LLI WALL	2.377E-15	3.395E-11	3.399E-11	7.779E-02	1.096E-08	6.625E-17	5.287E-10	7.779E-02
T BODY	1.878E-08	1.914E-05	5.366E-05	1.780E-04	9.116E-02	1.466E-04	2.704E-03	9.433E-02
ADREN	8.505E-10	1.940E-16	1.511E-15	1.498E-16	1.307E-08	8.869E-11	5.700E-03	5.700E-03
BL WALL	7.088E-20	2.345E-14	1.733E-13	3.417E-11	4.108E-11	1.154E-17	2.852E-03	2.852E-03
KIDNEYS	3.447E-15	1.158E-13	4.865E-13	6.589E-14	4.595E-09	2.974E-11	5.700E-03	5.700E-03
LIVER	1.311E-14	3.482E-13	3.813E-12	1.181E-16	2.359E-09	5.710E-03	5.560E-10	5.710E-03
OVARIES	8.850E-18	1.592E-11	2.221E-10	1.941E-09	2.082E-09	1.817E-15	5.700E-03	5.700E-03
PANCREAS	9.453E-13	5.501E-15	6.857E-14	5.933E-15	5.946E-09	3.592E-11	5.700E-03	5.700E-03
BONE	6.911E-15	5.820E-13	3.088E-12	5.358E-11	1.17	1.325E-11	4.711E-04	1.17
R MAR	7.268E-15	2.425E-12	1.296E-11	2.236E-10	0.426	1.273E-11	3.804E-03	0.430
Y MAR	9.453E-15	8.107E-13	4.332E-12	7.463E-11	8.327E-07	1.977E-11	5.700E-03	5.701E-03
ENDOST	6.911E-13	5.820E-13	3.088E-12	5.358E-11	0.856	1.325E-11	3.251E-03	0.859
SPLEEN	9.185E-14	8.180E-15	6.983E-14	3.882E-14	9.911E-09	1.500E-14	5.700E-03	5.700E-03
TESTES	1.552E-23	2.237E-18	3.480E-17	1.128E-12	4.551E-11	3.081E-21	5.697E-03	5.697E-03
THYMUS	9.720E-20	1.419E-22	2.162E-21	1.143E-22	4.330E-09	5.218E-16	5.700E-03	5.700E-03
THYROID	1.864E-23	1.477E-26	2.170E-25	1.897E-26	2.004E-09	3.669E-20	5.700E-03	5.700E-03
UTERUS	2.310E-18	3.619E-12	1.681E-12	1.189E-11	1.023E-10	2.689E-16	5.700E-03	5.700E-03

PERCENT DOSE EQUIVALENT..

NUCLIDE	SR-90	Y-90
TARGET		
LUNGS	0.0	130.0
RES LYM	0.0	100.0
S WALL	95.1	4.9
SI WALL	79.5	20.5
ULI WALL	55.3	44.7
LLI WALL	38.1	61.9
T BODY	17.5	82.5
ADREN	17.4	82.6
BL WALL	17.3	82.7
KIDNEYS	17.4	82.6
LIVER	17.3	82.7
OVARIES	17.4	82.6
PANCREAS	17.4	82.6
BONE	17.6	82.4
R MAR	12.7	87.3
Y MAR	17.4	82.6
ENDOST	19.0	81.0
SPLEEN	17.4	82.6
TESTES	17.4	82.6
THYMUS	17.4	82.6
THYROID	17.4	82.6
UTERUS	17.4	82.6

THE RETENTION FUNCTIONS FOR SR-90 ARE DERIVED AS EXPONENTIAL FITS TO POWER FUNCTIONS FROM ICRP PUBLICATION 20 (ICRP, 1972). OTHER RETENTION FUNCTIONS AND METABOLIC DATA ARE DERIVED FROM WASH-1400 (USNRC, 1975) AND KILLOUGH ET AL. (1978).

Figure 6. INREM II output: case-specific information for acute ingestion of 1 μCi of ^{90}Sr.

TOTAL INHALATION DOSES
(REM/MICROCURIE)

NUCLIDE	SOL	F1	AMAD	LUNGS	RES LYM	S WALL	SI WALL	ULI WALL	LLI WALL	T BODY	ADREN	BL WALL	KIDNEYS	LIVER
H-3	*	0.95	***	1.25E-04	2.48E-04	1.25E-04	1.30E-04	1.37E-04	1.33E-04	1.25E-04	1.34E-04	1.23E-04	1.29E-04	1.24E-04
C-14	*	0.95	***	6.18E-06	1.32E-05	7.35E-06	7.06E-07	6.90E-06	7.22E-06	1.41E-05	1.76E-05	6.75E-06	7.92E-06	8.88E-06
NA-22	D	0.95	1.0	9.43E-03	3.28E-02	6.22E-03	6.59E-03	6.87E-03	7.53E-03	9.16E-03	1.08E-02	8.20E-03	9.91E-03	9.45E-03
P-32	D	0.80	1.0	7.63E-03	8.60E-02	5.01E-04	2.66E-04	1.38E-03	3.91E-03	3.56E-03	3.01E-03	1.52E-03	3.00E-03	3.01E-03
	W	0.80	1.0	9.87E-02	0.20	1.28E-03	6.48E-04	3.63E-03	1.04E-02	3.87E-03	2.11E-03	1.07E-03	2.11E-03	2.11E-03
MN-54	D	1.00E-01	1.0	4.18E-03	4.71E-03	3.15E-03	3.65E-03	4.29E-03	3.98E-03	4.10E-03	8.69E-03	2.50E-03	5.35E-03	1.70E-02
	W	1.00E-01	1.0	2.47E-02	3.43E-02	4.20E-03	2.96E-03	3.89E-03	4.79E-03	3.66E-03	5.76E-03	1.34E-03	3.40E-03	9.17E-03
FE-55	W	1.00E-01	1.0	3.20E-03	1.57E-02	1.04E-05	2.68E-05	1.47E-04	3.64E-04	6.29E-04	1.05E-03	4.14E-04	1.09E-03	2.07E-03
	Y	1.00E-01	1.0	2.51E-02	0.34	1.28E-05	2.63E-05	1.43E-04	3.91E-04	6.09E-04	4.92E-04	1.92E-04	5.05E-04	9.56E-04
FE-59	W	1.00E-01	1.0	5.15E-02	0.13	5.25E-03	5.03E-03	8.49E-03	1.56E-02	5.51E-03	7.27E-03	4.03E-03	6.22E-03	1.00E-02
	Y	1.00E-01	1.0	8.29E-02	0.16	5.29E-03	3.94E-03	7.59E-03	1.50E-02	4.96E-03	6.01E-03	2.09E-03	4.07E-03	7.32E-03
CO-57	W	5.00E-02	1.0	1.49E-02	5.63E-02	7.08E-04	5.90E-04	1.15E-03	2.45E-03	8.04E-04	1.03E-03	3.75E-04	6.20E-04	1.17E-03
	Y	5.00E-02	1.0	6.17E-02	0.34	2.01E-03	6.14E-04	1.21E-03	2.45E-03	2.25E-03	2.84E-03	2.06E-04	9.86E-04	2.62E-03
CO-58	W	5.00E-02	1.0	2.96E-02	6.48E-02	3.22E-03	2.70E-03	4.26E-03	7.38E-03	2.65E-03	3.60E-03	1.20E-03	2.12E-03	3.99E-03
	Y	5.00E-02	1.0	5.92E-02	0.11	5.16E-03	2.77E-03	4.48E-03	7.40E-03	4.17E-03	5.95E-03	8.80E-04	2.81E-03	6.04E-03
CO-60	W	5.00E-02	1.0	0.13	0.41	1.82E-02	1.43E-02	1.94E-02	2.78E-02	1.71E-02	2.32E-02	1.19E-02	1.87E-02	2.90E-02
	Y	5.00E-02	1.0	1.3	12.	1.00E-01	2.48E-02	3.49E-02	2.85E-02	8.20E-02	0.11	1.06E-02	5.85E-02	0.12
ZN-65	D	0.50	1.0	1.18E-02	1.27E-02	1.14E-02	1.26E-02	1.31E-02	1.39E-02	1.40E-02	1.91E-02	1.46E-02	1.87E-02	1.86E-02
	W	0.50	1.0	2.53E-02	4.00E-02	9.32E-03	8.87E-03	9.51E-03	1.03E-02	1.05E-02	1.45E-02	9.63E-03	1.31E-02	1.42E-02
	Y	0.50	1.0	7.65E-02	0.16	1.30E-02	7.78E-03	8.65E-03	8.41E-03	1.24E-02	1.77E-02	7.52E-03	1.29E-02	1.78E-02
RB-86	D	0.95	1.0	7.68E-03	8.43E-02	7.33E-04	3.49E-04	6.34E-04	1.26E-03	6.69E-03	1.11E-02	5.69E-03	1.11E-02	1.11E-02
SR-89	D	0.20	1.0	6.55E-03	7.56E-02	3.95E-04	7.89E-04	4.63E-03	1.38E-02	3.89E-03	2.18E-03	1.09E-03	2.18E-03	2.18E-03
	Y	1.00E-02	1.0	0.31	0.78	1.22E-03	3.01E-03	1.76E-02	5.26E-02	4.76E-03	4.38E-05	2.17E-05	4.35E-05	4.38E-05
SR-90	D	0.20	1.0	9.89E-03	0.14	1.97E-04	4.72E-04	3.56E-03	1.41E-02	0.24	1.46E-02	7.30E-03	1.46E-02	1.46E-02
	Y	1.00E-02	1.0	8.5	2.74E 02	2.86E-02	6.87E-02	0.36	0.89	0.15	3.65E-03	1.83E-03	3.65E-03	1.90E-02
SR-91	D	0.20	1.0	4.27E-03	2.86E-02	5.56E-04	9.01E-04	2.30E-03	2.61E-03	3.52E-04	4.36E-04	2.65E-04	4.35E-04	4.13E-04
	Y	1.00E-02	1.0	9.76E-03	1.30E-02	8.02E-04	1.49E-03	4.07E-03	4.51E-03	2.75E-04	1.31E-04	7.02E-05	1.04E-04	2.19E-04
Y-90	W	1.00E-04	1.0	3.93E-02	4.66E-02	1.39E-03	3.32E-03	1.71E-02	4.09E-02	8.90E-04	9.07E-05	4.92E-05	9.07E-05	2.64E-04
Y-91M	W	1.00E-04	1.0	1.91E-04	4.98E-04	1.08E-05	5.86E-06	1.37E-05	3.00E-05	9.43E-06	9.00E-06	1.58E-06	5.46E-06	2.39E-05
Y-91	W	1.00E-04	1.0	0.20	0.73	1.22E-03	3.01E-03	1.76E-02	5.23E-02	5.67E-03	7.35E-04	3.67E-04	7.29E-04	2.04E-02
ZR-95	W	2.00E-03	1.0	6.85E-02	0.23	3.98E-03	3.49E-03	7.12E-03	1.55E-02	4.74E-03	5.26E-03	1.56E-03	2.93E-03	4.68E-03
	Y	2.00E-03	1.0	0.13	0.34	5.77E-03	3.25E-03	7.36E-03	1.59E-02	5.55E-03	6.58E-03	8.21E-04	3.02E-03	6.51E-03
ZR-97	W	2.00E-03	1.0	2.08E-02	2.15E-02	1.59E-03	3.32E-03	1.11E-02	1.61E-02	6.67E-04	3.60E-04	2.37E-04	2.55E-04	3.90E-04
	Y	2.00E-03	1.0	2.20E-02	2.22E-02	1.84E-03	3.93E-03	1.32E-02	1.92E-02	6.46E-04	2.76E-04	2.04E-04	2.22E-04	3.09E-04

Figure 7. Summary dose conversion factor table.

REFERENCES

D. E. Dunning, Jr., J. C. Pleasant, and G. G. Killough, *SFACTOR: A Computer Code for Calculating Dose Equivalent to a Target Organ per Microcurie-Day Residence of a Radionuclide in a Source Organ,* ORNL/NUREG/TM-85, (November 1977).

D. E. Dunning, Jr., S. R. Bernard, P. J. Walsh, G. G. Killough, and J. C. Pleasant, *Estimates of Internal Dose Equivalent to 22 Target Organs for Radionuclides Occurring in Routine Releases from Nuclear Fuel-Cycle Facilities, Vol. 2,* NUREG/CR-0150/V2, ORNL/NUREG/TM-190/V2, (in preparation).

I. S. Eve, "A Review of the Physiology of the Gastrointestinal Tract in Relation to Radiation Doses from Radioactive Materials," *Health Phys.* 12, 131-162 (1966).

G. G. Killough, D. E. Dunning, Jr., and J. C. Pleasant, *INREM II: A Computer Implementation of Recent Models for Estimating the Dose Equivalent to Organs of Man from an Inhaled or Ingested Radionuclide,* ORNL/NUREG/TM-84 (June 1978)a.

G. G. Killough, D. E. Dunning, Jr., S. R. Bernard, and J. C. Pleasant, *Estimates of Internal Dose Equivalent to 22 Target Organs for Radionuclides Occurring in Routine Releases from Nuclear Fuel-Cycle Facilities, Vol 1,* NUREG/CR-0150, ORNL/NUREG/TM-190 (June 1978)b.

International Commission on Radiological Protection, *The Metabolism of Compounds of Plutonium and Other Actinides,* ICRP Publication 19, Pergamon Press, 1972a.

International Commission on Radiological Protection, *Alkaline Earth Metabolism in Adult Man,* ICRP Publication 20, Pergamon Press, (1972)b.

P. E. Morrow, D. V. Bates, B. R. Fish, T. F. Hatch, and T. T. Mercer, "Deposition and Retention Models for Internal Dosimetry of the Human Respiratory Tract," *Health Phys.* 12, 173-207, (1966).

W. S. Snyder, M. R. Ford, G. G. Warner, and S. B. Watson, *A Tabulation of Dose Equivalent per Microcurie-Day for Source and Target Organs of an Adult for Various Radionuclides,* ORNL-5000, Part 1 (november 1974).

U.S. Nuclear Regulatory Commission, *Reactor Safety Study - An Assessment of Accident Risks in U.S. Commercial Nuclear Power Plants,* WASH-1400 (NUREG-75/014), 1975.