204,432(87)

S-60,102
RL-9049
Case No. IL-7208

PATENTS-US--A7204432

6-9-88

PATENTS-US--A7204432

DE89 010798

W-7405-ENG-48

Tomas B. Hirschfeld (Deceased)

METHOD OF PROTECTING SURFACES FROM ABRASION AND ABRASION RESISTANT ARTICLES OF MANUFACTURE

204,432

METHOD OF PROTECTING SURFACES FROM ABRASION AND ABRASION RESISTANT ARTICLES OF MANUFACTURE

By: Tomas B. Hirschfeld USA

(Deceased)

DISCLAIMER

This report was prepared as an account of work sponsored by an agency of the United States Government. Neither the United States Government nor any agency thereof, nor any of their employees, makes any warranty, express or implied, or assumes any legal liability or responsibility for the accuracy, completeness, or usefulness of any information, apparatus, product, or process disclosed, or represents that its use would not infringe privately owned rights. Reference herein to any specific commercial product, process, or service by trade name, trademark, manufacturer, or otherwise does not necessarily constitute or imply its endorsement, recommendation, or favoring by the United States Government or any agency thereof. The views and opinions of authors expressed herein do not necessarily state or reflect those of the United States Government or any agency thereof.

MASTER

DISTRIBUTION OF THIS DOCUMENT IS UNLIMITED

DISCLAIMER

This report was prepared as an account of work sponsored by an agency of the United States Government. Neither the United States Government nor any agency thereof, nor any of their employees, makes any warranty, express or implied, or assumes any legal liability or responsibility for the accuracy, completeness, or usefulness of any information, apparatus, product, or process disclosed, or represents that its use would not infringe privately owned rights. Reference herein to any specific commercial product, process, or service by trade name, trademark, manufacturer, or otherwise does not necessarily constitute or imply its endorsement, recommendation, or favoring by the United States Government or any agency thereof. The views and opinions of authors expressed herein do not necessarily state or reflect those of the United States Government or any agency thereof.

DISCLAIMER

Portions of this document may be illegible in electronic image products. Images are produced from the best available original document.

METHOD OF PROTECTING SURFACES FROM ABRASION AND ABRASION RESISTANT ARTICLES OF MANUFACTURE

BACKGROUND OF THE INVENTION

The United States Government has rights in this invention pursuant to Contract No. W-7405-ENG-48 between the United States Department of Energy and the University of California.

This invention relates to surface coatings for protecting objects from abrasion and impact damage by moving particles. More particularly, the invention relates to a method for increasing the abrasion resistance of fabricated structural components that may be exposed to impacting particulates and also relates to abrasion resistant articles of manufacture.

Structural components of a variety of different kinds are impacted by hard moving particles that can cause

rapid erosion. Coal slurry pipelines, fluidized beds for conveying particulate material and the turbine blades of jet engines are among the many types of structural component in which abrasive erosion or other impact damage can cause serious problems.

Frequent replacement of components which have been damaged by a particle flow is an undesirable maintenance complication and adds substantially to operational costs. Efforts to minimize the effects of abrasion by forming components with extremely thick walls or by fabricating the component of special alloys also add to costs and are often not as effective as would be desirable.

Conventional procedures for increasing the abrasion resistance of structural surfaces are not as effective as would be desirable and are often unusable in many chemical environments or where high temperatures are present or in situations where the structural element may experience deformations during fabrication or use.

For example, coating the surface of a metal object with a continuous layer of extremely hard material such as certain ceramics can provide good abrasion resistance particularly when the particle flow is parallel or close to parallel with the surface but brittle and unyielding layers of this kind are susceptible to impact damage by particles which travel more directly towards the surface. Chipping can occur and cracks can develop and rapidly enlarge as a result of such impacts. The range of temper-

atures which such ceramic coated elements can sustain is often limited by thermal expansion mismatches between the metal and the coating material. Fabrication procedures for such layers can impose constraints on the composition of the underlying metal. Hard brittle coatings are also often incompatible with structural surfaces that may encounter substantial deformations during fabrication or use.

Coatings of some elastomeric materials combine good impact resistance with fair to moderate abrasion resistance. Such elastomeric coatings are usable only within a very narrow temperature range and are susceptible to chemical damage in many working environments.

Under many circumstances, it would be advantageous if an abrasion resistant surface coating was also effective as thermal and/or acoustical insulation and further served to reduce friction at the surface where flows of particulate or granular materials or larger objects travel along the coated surface. High temperature flows of particulate material are present in fluidized bed catalytic reactors, for example. Conduits which carry flows, such as slurry pipelines for example, can generate an undesirable amount of noise. Prior coatings of the above described kind are not particularly effective as thermal or acoustical insulation and do not significantly reduce friction.

Thus there is a need for a more effective, durable and adaptable coating for inhibiting abrasion of structural surfaces and for protecting the surface against impact

damage. Prior efforts to achieve this objective have been primarily concerned with the chemical, metallurgical or crystalline composition of protective coating materials. It has not heretofore been recognized that the physical configuration of the coating can also be extremely significant.

The present invention is directed to overcoming one or more of the problems discussed above.

SUMMARY OF THE INVENTION

In one aspect, the present invention provides a method of protecting a surface of an article of manufacture from abrasion by impacting particulates which includes the step of providing a hard coating of protective material on said surface. Further steps include preparing the coating in the form of a mass of filaments of the hard protective material including proportioning the filaments to be sufficiently thin in relation to their length to impart flexibility to the filaments. A root end of each of the filament is secured to the surface which is to be protected and the filaments are spaced sufficiently close together to enable flexing of the free end portions of adjacent filaments into an overlying relationship with each other to define a cushioning mat of flexible filaments which covers the underlying region of the surface with the hard protective material.

In another aspect, the invention provides abrasion resistant articles of manufacture having a surface formed of solid bulk material that is to be protected from impacts by particulate matter and having a coating of hard protective material on the surface. The coating is in the form of filaments of the hard protective material which are sufficiently thin in relation to their length to exhibit flexibility and which have root portions secured to the bulk material and free portions that extend outward from the surface. The filaments are spaced sufficiently close together to enable flexing of the free portions of adjacent filaments into an overlying relationship with each other at which the adjacent filaments define a cushioning mat of the hard material that covers the underlying region of the surface.

Hard surfacing materials, such as ceramics for example, are not generally considered to be flexible nor capable of yielding locally in response to impacts by moving particles. Such materials do in fact exhibit these characteristics when, in accordance with the present invention, the material is in the form of a mass of filaments each of which is very long in relation to its diameter and each of which has one end secured to the surface which is to be protected. The invention provides a protective covering for surfaces of structural components that can be extremely hard while also being yielding, elastic and compliant. Particle impact forces are dissipated as the free end portions of

individual filaments are not rigidly fixed in position and may accomodate to particle impacts. This combination of properties results in extremely high resistance to abrasion and impact damage. The invention can be formed of materials which are tolerant of an extremely wide range of temperatures and which are highly resistant to chemical attack. The protective coating also accomodates easily to flexing or other deformations of the protected surface. The coating can also function as thermal and acoustical insulation and can act to reduce friction where materials travel along the coated surface.

The invention provides a fabricated protective coating for articles of manufacture that in some respects resembles an evolutionary innovation found in nature. The hair or fur of mammals is popularly considered to be primarily for the purpose of thermal insulation. Hair or fur has not heretofore been viewed as a hard coating on the skin although in fact the exterior surface of an individual hair is much harder than skin. The extraordinary abrasion resistance of a hair like coating on a manufactured product has not heretofore been recognized nor have the parameters which impart this property been previously determined.

The invention, together with other objects and advantages thereof, may be further understood by reference to the following description of preferred embodiments and by reference to the accompanying drawings.

BRIEF DESCRIPTION OF THE DRAWINGS

FIG. 1 is a perspective view of an abrasion resistant plate embodying the invention which may be used as a structural component of apparatus that is exposed to a flow of abrasive particulates.

FIG. 2 is a vertically foreshortened elevation section view of a minute portion of the plate of FIG. 1, the view being partially diagramatic in that flexible filaments are shown with a strictly linear and upright orientation in order to depict certain dimensional characteristics in the drawing.

FIG. 3 is another diagramatic section view of a minute portion of the plate of FIG. 1 illustrating the filament orientations which more typically exist in the presence of a fluid flow, the spacing of the filaments being exaggerated in the figure in the interests of clarity of illustration.

FIG. 4 is an elevation section view of a small region of the plate taken along line IV-IV of FIG. 3 but depicting a more typical spacing of the filaments.

FIG. 5 is a graph depicting the effect on abrasion resistance of variations in the spacing or packing density of the filaments as measured by weight loss during a period of sandblasting of test samples.

FIG. 6 is a graph comparing weight variation of a test sample embodying the invention during a period of sand-blasting with the weight variations of an uncoated sample of

the base material and a third sample having having internal reinforcement in the form of filaments that do not emerge from the surface of the base material.

FIG. 7 is a graph depicting the effects of varying the angle at which a flow of sandblasting material impacts a sample embodying the invention.

FIG. 8 is an elevation section view of a minute region of another embodiment of the invention illustrating a filament orientation which increases abrasion resistance to directed flows of particulate matter.

FIG. 9 is a broken out view of a conduit for transmitting abrasive flows in accordance with another embodiment of the invention.

FIG. 10 is a frontal view of a jet engine turbine rotor having blades embodying the invention.

FIG. 11 is fragmentary view of a portion of the turbine rotor and blades of FIG. 10 taken along line X-X thereof.

DETAILED DESCRIPTION OF THE PREFERRED EMBODIMENTS

Referring initially to FIGS. 1 and 2 of the drawings in conjunction, structural surfaces 11 that may need to be protected from the abrasive effects of a flow of particles 12 may have any of a variety of configurations and may be formed of any of a number of different materials. The sur-

face 11 of this particular example is one face of a flat steel plate 13 of which only a portion is shown in the drawing. The plate 13 may variously be the floor member of a fluidized bed in a catalytic reactor or a floor or wall member of a solid fuel furnace in which an abrasive flow of flyash occurs or a component of any of diverse other devices in which the abrasive effects of moving particles pose problems.

In accordance with the method of the present invention a coating 14 of protective material is secured to to the surface 11, the coating material in most cases being one which is harder than the steel or other material of which the surface itself is formed. More particularly, the coating 14 material is prepared in the form of a mass of flexible filaments 16 and a root end 17 of each filament is secured to the surface 11. This may be done by embedding the root ends 17 within the plate 13 itself or by embedding the the root ends in another material which is then bonded to the surface, suitable techniques for securing the filaments 16 to the plate 13 or other substrate material being hereinafter described in more detail.

Hard coating materials of the type most suited for the present purpose are generally considered to be brittle and inflexible. The coating 14 material is made to exhibit a high degree of flexibility by proportioning the filaments 16 to be extremely thin in relation to their length as will also hereinafter be discussed in more detail.

Preferred filament materials for many applications of the invention include graphite, silicon dioxide (silica), aluminum oxide (alumina) and zirconium oxide. Such ceramics or the like are extremely hard, remain functional at very high and low temperatures, are stable in a variety of reactive chemical environments and can be produced in the form of an extremely thin filament by known techniques. The filaments may also be formed of still other hard materials which have some or all of these properties depending on the conditions to which the coated article will be exposed.

Referring now to FIG. 3, the root ends 17 of adjacent filaments 16 are positioned sufficiently close to each other to enable flexing of the free end portions 18 of a series of adjacent filaments into an overlying or overlapping relationship with each other to form a cushioning mat 19 which covers the underlying region of surface 11.

A particle laden fluid flow 12 traveling along the surface 11 causes the free end portions 18 of the filaments 16 to flex in the direction of the flow. Thus in operation, the overlapping free end portions 18 do not typically extend in random directions but tend to assume more or less similar alignments along the direction of flow.

A mat 19 of this kind provides an extremely hard coating that is also elastic and compliant. Particle impact force is absorbed by flexure of the filaments 16. This produces a resistance that increases sharply as the mat 19 compresses with much of the energy being dissipated into

filament 16 rearrangement and moderate rebound forces. At the same time, the hardness of each individual filament 16 makes it difficult to abrade. Accommodation occurs between the compliant filaments 16 and impacting particles thereby reducing overall friction forces.

The progressive abrasion of an object during a period of exposure to a flow of particulates may be evaluated by weighing the object at intervals during the period. FIG. 6 is a graph showing the results of a ten minute exposure of three test samples of 1/8 inch thick hardened epoxy resin to sandblasting. One sample was uncoated and another was also uncoated but contained internal carbon fiber reinforcement that did not emerge from the surface. The third sample had emergent carbon fibers forming a coating of the type herein described. A sandblaster nozzle was directed at the three samples with each sample being within the cone of uniform sandblasting effect. The nozzle was situated 10 inches away from the samples and was operated at an air flow rate of 6 scft/min using 80 mesh powder. The sandblasting was stopped at several times during the exposure to enable cleaning and weighing of each sample, the results of which are shown in FIG. 6. In particular, the uncoated and unreinforced sample exhibited a weight loss of almost 30% in about 8 minutes. The internally reinforced sample showed a a weight loss of almost that degree in 10 minutes. The sample having a filamentary coating exhibited no detectable weight loss.

The reproducibility of the above described measurements was found to be 4% for replicates in space (two identical samples mounted along side each other) and 6% for replicates in time.

In another test, three samples of the same types were sandblasted for 30 minutes using 40 mesh material and an air flow rate of 4 scft per minute with the nozzle again being situated 10 inches from the sample. At the end of that period, no visible change could be seen in the sample having a coating of emergent filaments. The sample having only internal fiber reinforcement was reduced to a few fragments in the holding cup and there was a hole in the holding cup where the uncoated and unreinforced sample had been.

In still another test, carbon fiber reinforced epoxy samples with a coating of emergent fibers on one side only were exposed to sandblasting on the one side and then on the other side. In each case the sample resisted sandblasting of the coated side without damage for periods of up to one hour but was totally destroyed in minutes when abraded from the other side.

Where optimal performance is to be achieved, with reference again to FIG. 2, the diameter, length and spacing of the filaments 16 should be within certain limits. Imparting sufficient flexibility to hard materials of the preferred type requires that the filaments 16 be extremely long in relation to their diameter. The length L of the free portion 18 of the filament should be at least an order

of magnitude larger than the minimum radius of curvature to which it can be flexed without breakage in order to show appreciable compliance during particle impacts and in order to be able to form a resilient mat. In particular, the proportions of the filament should meet the condition:

$$\frac{L}{d} > \frac{5}{E}$$

where d is the filament diameter and E is its limiting elongation at the breaking point.

In some instances a further constraint arises from restrictions on the thickness of the coating 14 as a whole. These can arise, for example, out of fluid dynamic considerations. Filaments 16 extending to a certain depth beyond the boundary layer of a flowing fluid will reach a "flag waving" oscillation threshold and be quickly fatigued to breakage. The problem is reduced by mutual protection when the filament density is high but the probabilistic distribution of filament positions is such that a maximum coating thickness exists to provide optimum durability. In particular, the maximum thickness T of the matted filaments 16 should meet the condition:

$$t > 2TE$$

where t is the thickness of the boundary layer.

In order for the filaments 16 to be securely anchored, the anchoring force on each filament should exceed the limiting strength of the filament. In the case of filaments 16 which are anchored only by an extension of the root portion into the underlying bulk material such as the steel of plate 13 in the embodiment depicted in FIG. 2, this requires that:

$$\frac{l}{d} = \frac{S_f}{4\,S_b}$$

where l is the length of the buried portion 17 of the filament, S_f is the specific strength of the filament material and S_b is the specific strength of its bond to the substrate material. Given typical values of these variables, the buried length l should exceed 100 times the filament diameter d. As fabrication procedures and the thickness of the protected plate 13 may limit the buried length l, very small filament diameters are usually desirable.

The factors discussed above combine with limitations on filament length set by manufacturing or assembly constraints to impose upper limits on filament diameter, typically to much less than the thickness of a human hair and which range down to a few microns or below in most cases. Another consideration bearing on filament diameter is that smaller diameter filaments can accommodate to smaller

diameter particles although at some point this is no longer significant as extremely small particles lack the kinetic energy needed to break the filament.

Use of small diameter filaments 16 with small spacings between filaments also limits the size of particles that can penetrate into the coating 14 to the region near surface 16. Relatively large particles lodged at that location prevent flexing and accommodation of the filaments 16 to particle impacts and thereby expose the filaments to impact damage. The interstices between filaments 16 are preferably sufficiently small to exclude particles from the root region other than particles having a size at the low end of the particle size distribution. The very small particles do not cause problems as they are quickly removed by the fluid flow along the coated surface.

Referring now to FIG. 4, the filament 16 diameter and the filament spacing jointly determine what is termed packing density. Packing density is the proportion, expressed as a percentage, of the area of surface 11 that is occupied by filaments 16. Given filaments of circular cross section as in this example, the maximum possible packing density is about 62% under which condition adjacent filaments contact each other.

The packing density of coating 14 is also subject to constraints. At low packing densities the filaments 16 are to far apart to provide an adequate degree of mutual support and protection. This exposes the filament 16 to shear fail-

ure, from particle impact, at the region where it emerges from surface 11 which region is relatively inflexible and noncompliant as the adjoining root portion 17 is fixed in position. Low packing densities may also cause the mass of filaments as a whole to be inadequately rooted to substrate 13 enabling pulling out of the entire mass by the drag imparted by friction forces.

At very high packing densities, on the other hand, the filaments keep each other from bending to the extent needed to accommodate to impacts. Consequently the filaments may be shattered in compression with breakage at various heights above the surface 11.

The dependence of the process on packing density is graphically depicted in FIG. 5 which shows the percentage weight loss experienced by test samples during exposures to sandblasting for a period exceeding one hour, the samples being similar to those previously described except that the samples had different packing densities ranging from about 15% to about 62%. No significant weight loss was found at packing densities in the vicinity of 50%. Packing densities below about 42% and above about 58% resulted in severe weight losses.

The abrasion and impact damage resistance of the process is also dependent on the flow direction of the impacting particle stream which flow direction is essentially parallel to the protected surface in many applications of the process. Changing the angle of particle flow relative

to the surface does not significantly affect abrasion resistance until an impact angle of about 45% is exceeded. FIG. 7 is a graphic depiction of the results of sandblasting two similar samples for a period of ten minutes using a particle flow mean impact angle of 45 degrees in the first case and a mean impact angle of 0 degrees, i.e. a flow direction which was normal to the surface, in the second case. No significant weight loss occured in the first case while a weight loss of almost 30% was observed in the second case.

Destructive testing of samples of the type hereinbefore described, by using increased sandblasting flow velocities, produced the interesting result that failure occurs from sudden shearing of the filaments 16 rather than by abrasion or gradual attrition. Subjecting the protected surface to repeated impacts by particles traveling at velocities below the critical value does not produce significant damage and thus the filamentary coating will remain functional for extended periods of time under that condition.

Referring now to FIG. 8, the ability of individual filaments 16 to resist damage from impacting particles is increased if the filaments are inclined relative to the protected surface 11 with the inclination being such that the filaments extend out from the surface somewhat in alignment with the flow direction of the particle stream 12. This parting of the hair like mass of filaments 16 causes the

filaments 16 to be at a lesser angle with the trajectories of impacting particles so that the impacts are more glancing and exert less shearing force on the filaments.

Referring again to FIG. 2, the assembly of the filaments 16 and the substrate material such as plate 13 may be performed in a number of ways depending on the composition of the substrate and filaments. The hereinbefore described test samples were fabricated by partially immersing bundles of the filaments 16 in a bed of epoxy resin prior to complete curing of the resin. Embedding of the filaments 16 after the resin was partially cured and therefore relatively viscous inhibited a tendency for the liquid to wick upward into the filament mass. Constricting the filament bundle around it's waist during completion of the curing process is also advantageous for the same purpose.

Securing the filamentary coating 14 to a metal substrate 13 can be accomplished by impregnating the root region of the mass of filaments 16 with metallic power followed by heat sintering to solidify the metal or by plasma spraying molten metal into the root region and allowing it to cool. The resulting metal impregnated mats may then be heat fused to one side of a metal plate. Fusing, without liquifaction of the metal surrounding the filament ends, can be accomplished intermixing an additional metal into the contact zone where fusing is to occur, the additional metal being one which brings about a eutectic condition at the zone of contact. Copper, for example,

alloys with aluminum to form a eutectic.

The coated plate 13 may also be fabricated by first preparing a composite plate in which the filaments 16 are fully embedded in the plate material while it is in a liquified form. The plate material is allowed to harden and an upper layer of the material is then etched away, using a a solvent which does not react with the filament material, to expose the free end portions 18 of the filaments.

Adhesion of the filaments 16 to the metal can be strengthened with bonding agents, the choice of which is dependent on the particular materials which are to be joined. A coating of nickel on carbon filaments, for example, promotes adhesion of carbon filaments to aluminum. The coating may be produced by techniques which are used in the electronics industry such as electroless deposition from metal solutions containing reducing agents that are activated by surface catalytic phenomena. Prior efforts to provide a nickel coating on carbon by this technique have produced erratic results. The addition of small amounts of metallic iron to the solution initiates an autocatalytic reaction that provides for consistently good results.

An advantageous fabrication procedure, where carbon filaments 16 are to be secured to a metal substrate 13 is to initially prepare a pile carpet like mat of acrylic fiber or other carbonaceous filament. This may be done using techniques and equipment similar to those used in carpet manufacture although narrower filament and higher packing

densities may be needed as hereinbefore discussed. The acrylic mat may then be carbonized into graphite fiber by subjecting it to high heat in the absence of oxygen. The woven backing of the mat may then be impregnated with metal and bonded to a metal plate by the techniques hereinbefore described or, where a lower strength bond is tolerable, it may be secured to the surface that is to be protected with an adhesive.

In instances where the diameter of the carbon fiber is greater than desired, the carbonized mat can be heated to a temperature in the range from about 375 degrees to about 425 degrees C in humid air. Surface oxidation causes causes a gradual weight and diameter reduction without loss of specific strength. Carbon filaments with diameters as low as two microns have been prepared by this procedure.

The invention has been described with reference to protecting the surface 11 of a flat plate 13. The method is equally applicable to components having other configurations including ones in which an interior surface requires protection. Referring to FIG. 9, for example, the interior surface 11a of a pipe 21 may be protected from abrasion by a particle laden fluid flow 12a by providing an internal filamentary coating 14a of the type herein described. The pipe 21 may be initially formed as a flat plate having a filamentary coating 14a of the previously described form on one surface. The coated plate may then be rolled or otherwise formed into a cylindrical configuration and the resulting

seam 22 may be sealed by welding or other means.

The invention may be advantageously applied to moving components of apparatus as well as to stationary structures. For example, with reference jointly to FIGS.10 and 11, the blades 23 which extend radially at the periphery of a jet engine turbine rotor 24 are impacted by a fluid flow which contains highly abrasive particles produced by combustion of fuel in the engine. The blades 23 are made of or surfaced with hard ceramic to provide heat and abrasion resistance but as previously discussed such hard brittle materials in bulk form are undesirably subject to impact damage.

A surface coating 14b of filamentary ceramic of the previously described form, anchored in the bulk ceramic of the turbine blade 23, shares the thermal resistance and strength of the bulk ceramic while providing an elastic cushioning effect that inhibits impact damage. Preferably the coating 14b is of the parted form in which the filaments 16 at each side of the blade 23 are directed somewhat in the direction of flow past the blade rather than being oriented to extend directly outward from the blade surface. The coating 14b should be sufficiently thin that it does not extend outside of the boundary layer of blade 23 in order to avoid aerodynamic problems.

The coating 14b also enhances cooling in turbine blades 23 which have an array of perforations 26 in the blade surface through which cooling air is emitted.

The method and products of the invention have been herein discussed with respect to protecting surfaces against abrasion and impact damage. Filamentary coatings of this type also provide other results which can be beneficial in many circumstances. Frictional forces at the surface are reduced and a substantial degree of thermal and acoustic insulation is provided.

While the invention has been described with respect to certain specific embodiments for purposes of example, many other variations and modifications are possible within the scope of the invention and it is not intended to limit the invention except as defined in the following claims.

METHOD OF PROTECTING SURFACES FROM ABRASION AND ABRASION RESISTANT ARTICLES OF MANUFACTURE

ABSTRACT OF THE DISCLOSURE

Surfaces of fabricated structures are protected from damage by impacting particulates by a coating of hard material formed as a mass of thin flexible filaments having root ends secured to the surface and free portions which can flex and overlap to form a resilient cushioning mat which resembles hair or fur. The filamentary coating covers the underlying surface with hard abrasion resistant material while also being compliant and capable of local accommodation to particle impacts. The coating can also function as thermal and/or acoustical insulation and has a friction reducing effect.

DOE S-60,102

COMBINED DECLARATION AND POWER OF ATTORNEY

As the below named inventor(s), I (we) hereby declare that:

My (Our) residence, post office address and citizenship(s) are as stated below next to my (our) name(s).

I believe I am the original, first and sole inventor (if only one name is listed below) or an original, first and joint inventor (if plural names are listed below) of the subject matter which is claimed and for which a patent is sought on the invention entitled

METHOD OF PROTECTING SURFACES FROM ABRASION
AND ABRASION RESISTANT ARTICLES OF MANUFACTURE

the specification of which (check one)

[X] is attached hereto [ ] was filed on _____ as Serial No. _____
and was amended on _____ (if applicable).

I (We) hereby state that I (we) have reviewed and understand the contents of the above-identified specification, including claims, as amended by any amendment referred to above.

I (We) acknowledge the duty to disclose information which is material to the examination of this application in accordance with Title 37, Code of Federal Regulations, § 1.56(a)

I (We) hereby claim foreign priority benefits under Title 35, United States Code § 119 of any foreign application(s) for patent or inventor's certificate listed below and have also identified below any foreign application for patent or inventor's certificate having a filing date before that of the application on which priority is claimed:

PRIOR FOREIGN APPLICATION(S)

Number	Country	Filed (Day/Month/Year)	Priority claimed Yes	Priority claimed No
	NONE			

I (We) hereby claim the benefit under Title 35, United States Code, § 120 of any United States application(s) listed below and insofar as the subject matter of each of the claims of this application is not disclosed in the prior United States application in the manner provided by the first paragraph of Title 35, United States Code, § 112, I acknowledge the duty to disclose material information as defined in Title 37, Code of Federal Regulations, § 1.56(a) which occurred between the filing date of the prior application and the national or PCT international filing date of this application:

Serial No.	Filing Date	Status
	NONE	

POWER OF ATTORNEY: As the named inventor(s), I (we) hereby appoint the following attorney(s) and/or agent(s) to prosecute this application and transact all business in the Patent and Trademark Office connected therewith.

Names and Registration Nos.		Names and Registration Nos.	
Richard E. Constant	20,927	Roger S. Gaither	27,273
William R. Moser	24,763	L. E. Carnahan	20,555
Judson R. Hightower	26,603	Michael B.K. Lee	31,846
Richard A. Lambert	25,692		
Robert J. Marchick	27,057		

Send Correspondence To:

Richard E. Constant
Assistant General Counsel for Patents
Mail Code GC-42 (FORSTL) MS-6F-067
1000 Independence Avenue, S.W.
United States Department of Energy
Washington, D. C. 20585

Direct Telephone Calls To:
(Name and Telephone Numbers)

L. E. Carnahan
FTS 532-4367
COM (415) 422-4367

U.S.DEPARTMENT OF ENERGY
GC F 2050.3 (5-83)

Combined Declaration And Power Of Attorney DOE S-60,102

I (We) hereby declare that all statements made herein of my (our) own knowledge are true and that all statements made on information and belief are believed to be true; and further that these statements were made with the knowledge that willful false statements and the like so made are punishable by fine or imprisonment, or both, under § 1001 of Title 18 of the United States Code and that such willful false statements may jeopardize the validity of the application or any patent issuing thereon.

TOMAS B. HIRSCHFELD (Deceased)	* Judith Hirschfeld
Full Name Of Inventor	Signature
LIVERMORE, CALIFORNIA	6/1/88
Residence (City, State Or Foreign Country)	Date
1262 VANCOUVER WAY, LIVERMORE, CALIFORNIA 94550	USA
Postal Address (Street, City, State, Zip Code)	Citizenship

Full Name Of Inventor	Signature
Residence (City, State Or Foreign Country)	Date
Postal Address (Street, City, State, Zip Code)	Citizenship

Full Name Of Inventor	Signature
Residence (City, State Or Foreign Country)	Date
Postal Address (Street, City, State, Zip Code)	Citizenship

Full Name Of Inventor	Signature
Residence (City, State Or Foreign Country)	Date
Postal Address (Street, City, State, Zip Code)	Citizenship

Full Name Of Inventor	Signature
Residence (City, State Or Foreign Country)	Date
Postal Address (Street, City, State, Zip Code)	Citizenship

*Administratrix of the Estate of Tomas B. Hirschfeld

U.S. DEPARTMENT OF ENERGY
OMB F 2050.3A (8-83)

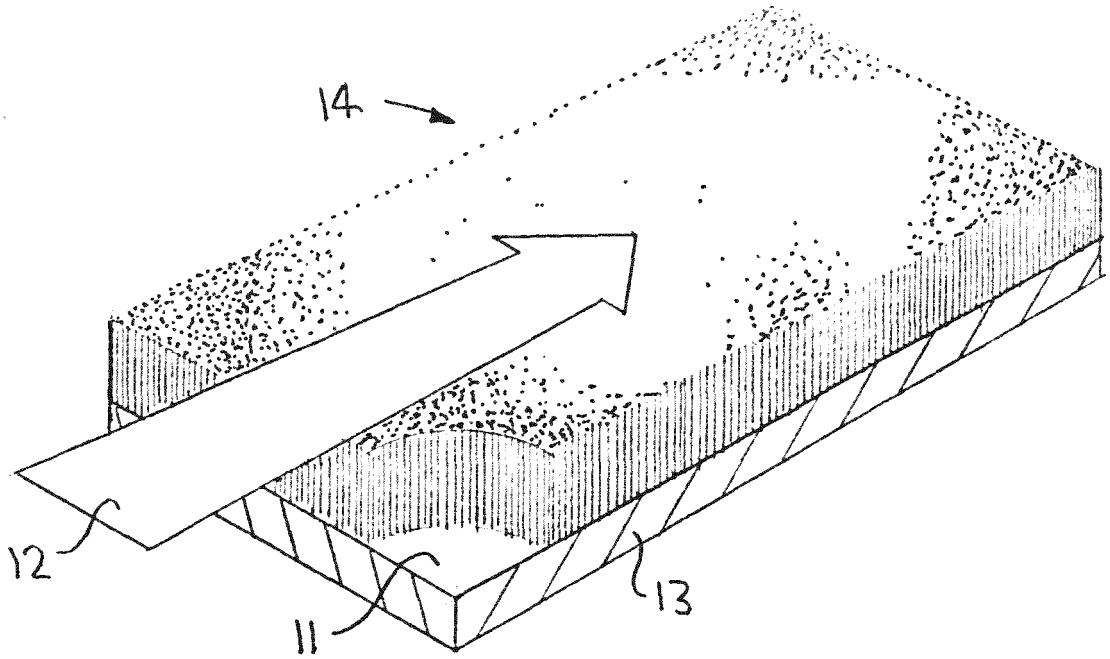

FIG. 1

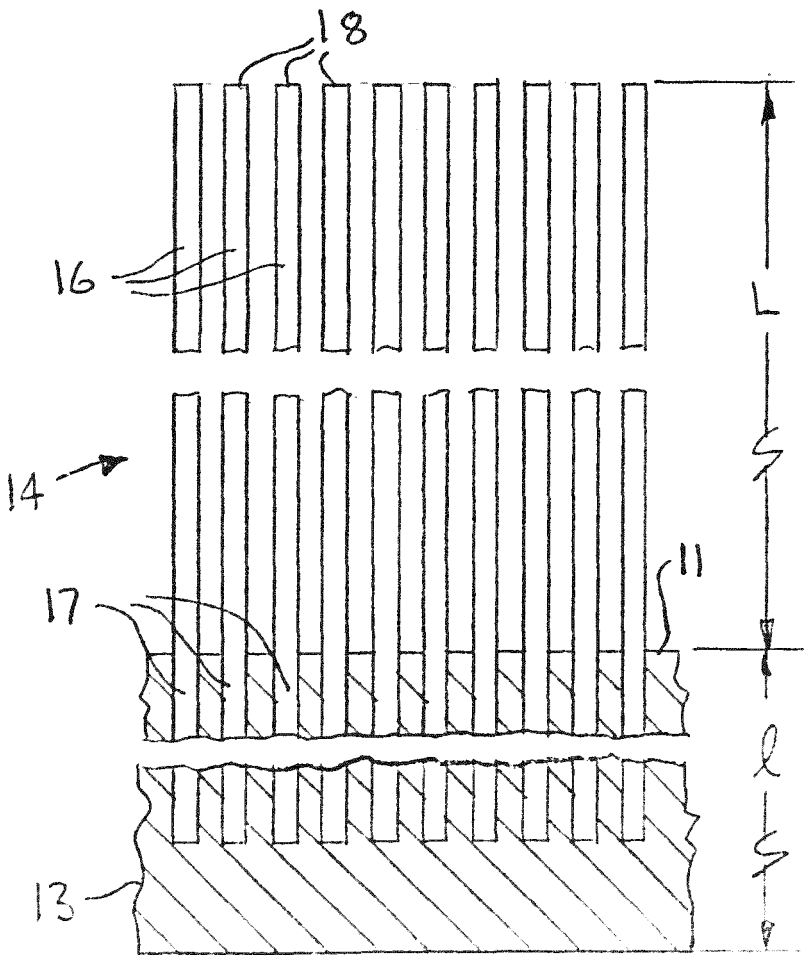

FIG. 2

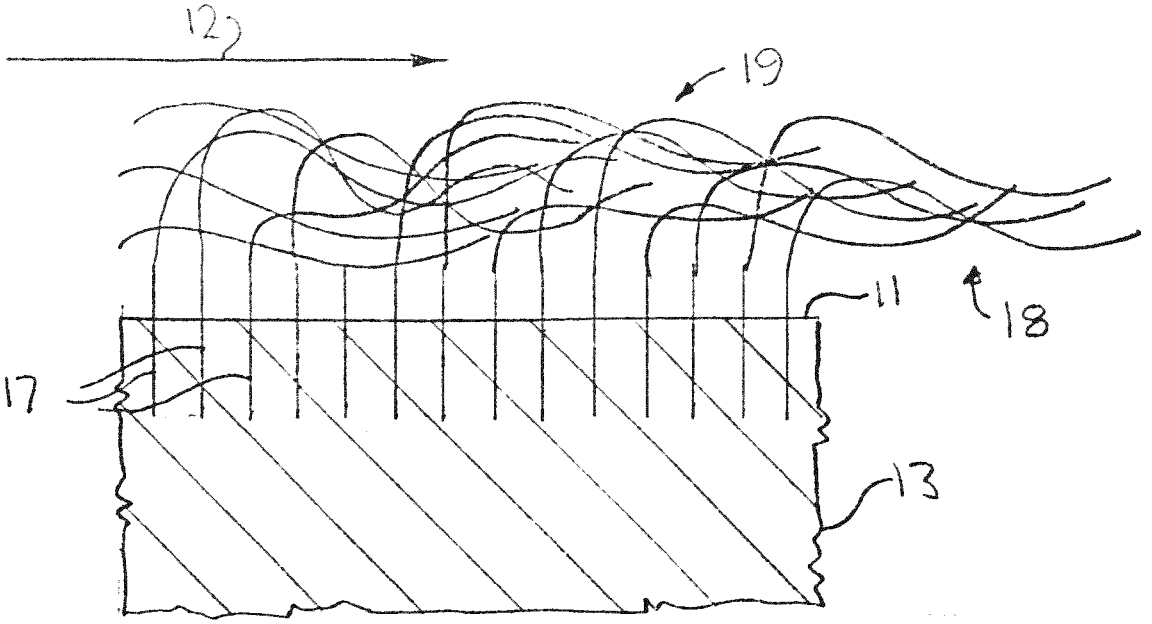

FIG. 3

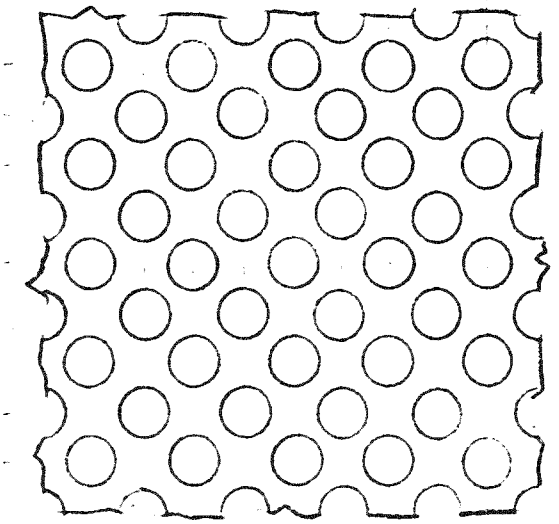

FIG. 4

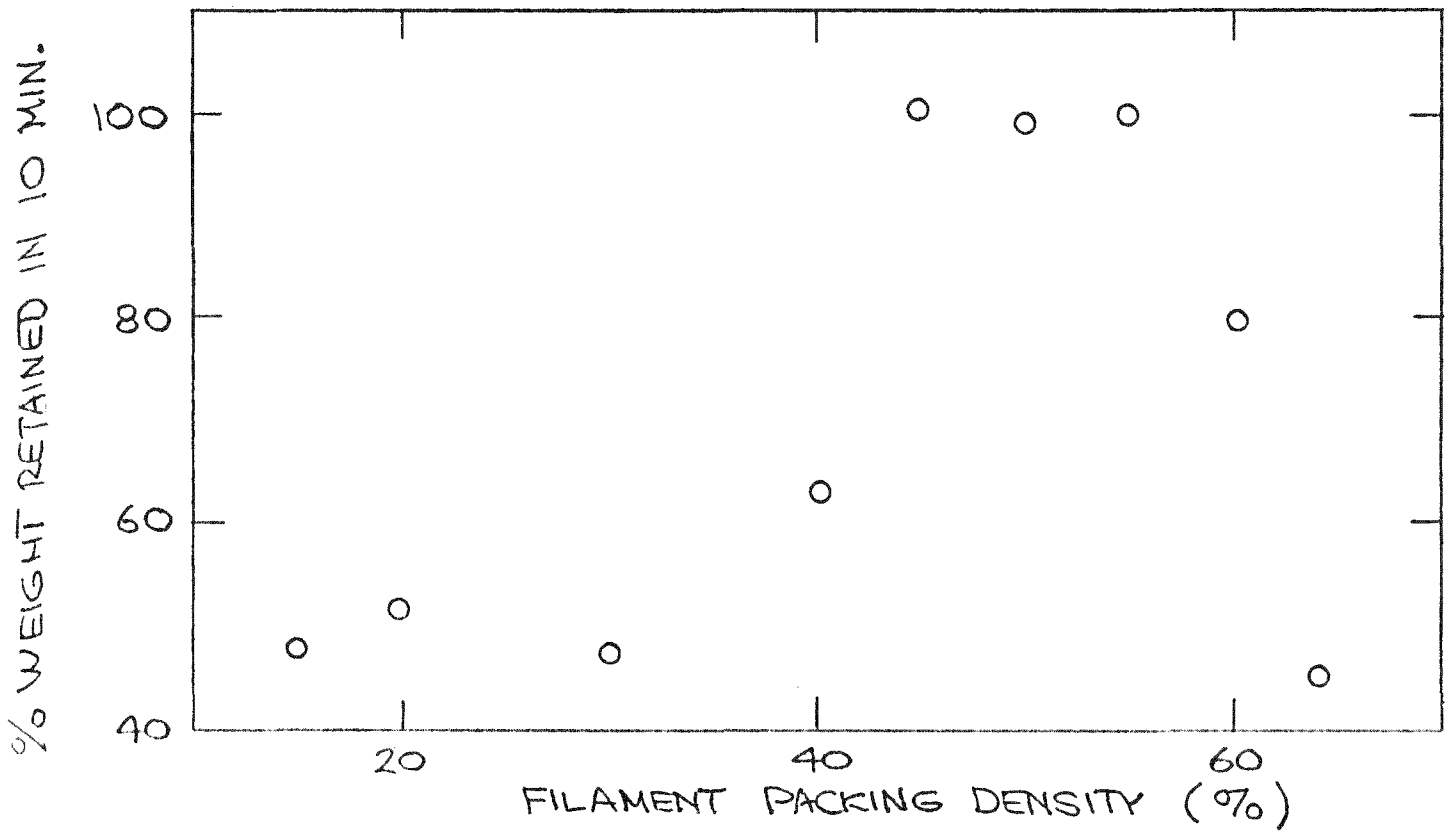

EFFECT OF FILAMENT PACKING DENSITY ON PROTECTION

FIG. 5

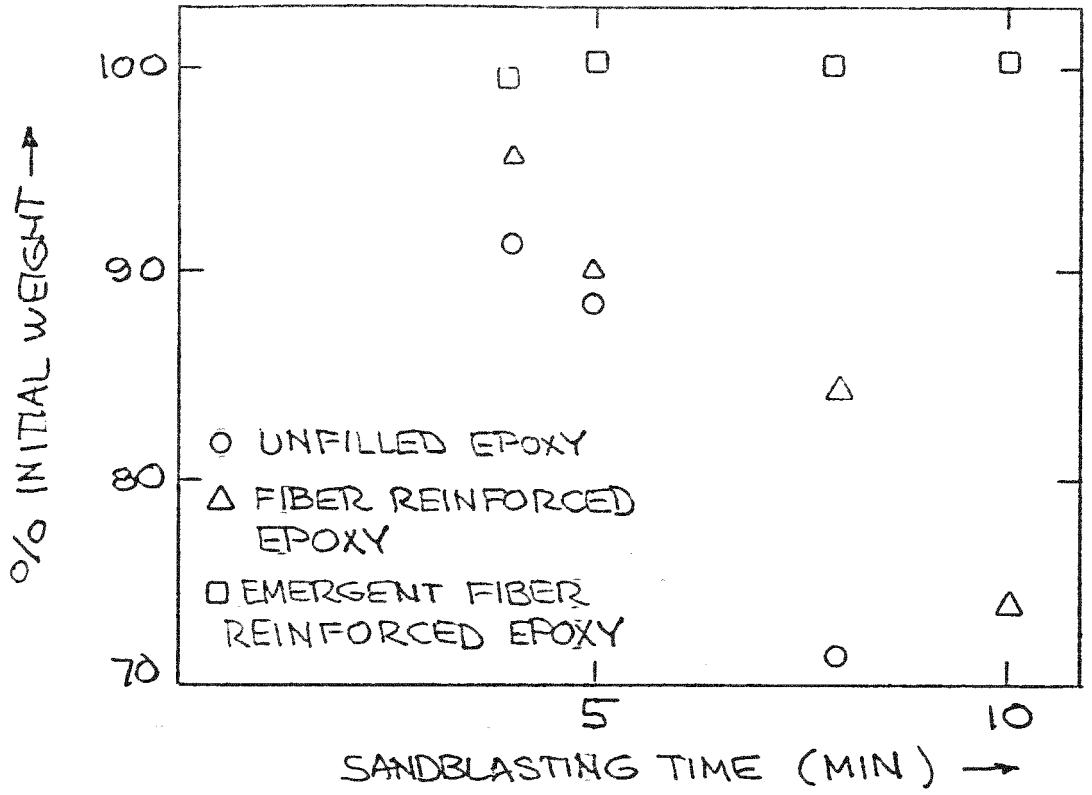

WEIGHT LOSS IN SANDBLASTING

FIG. 6

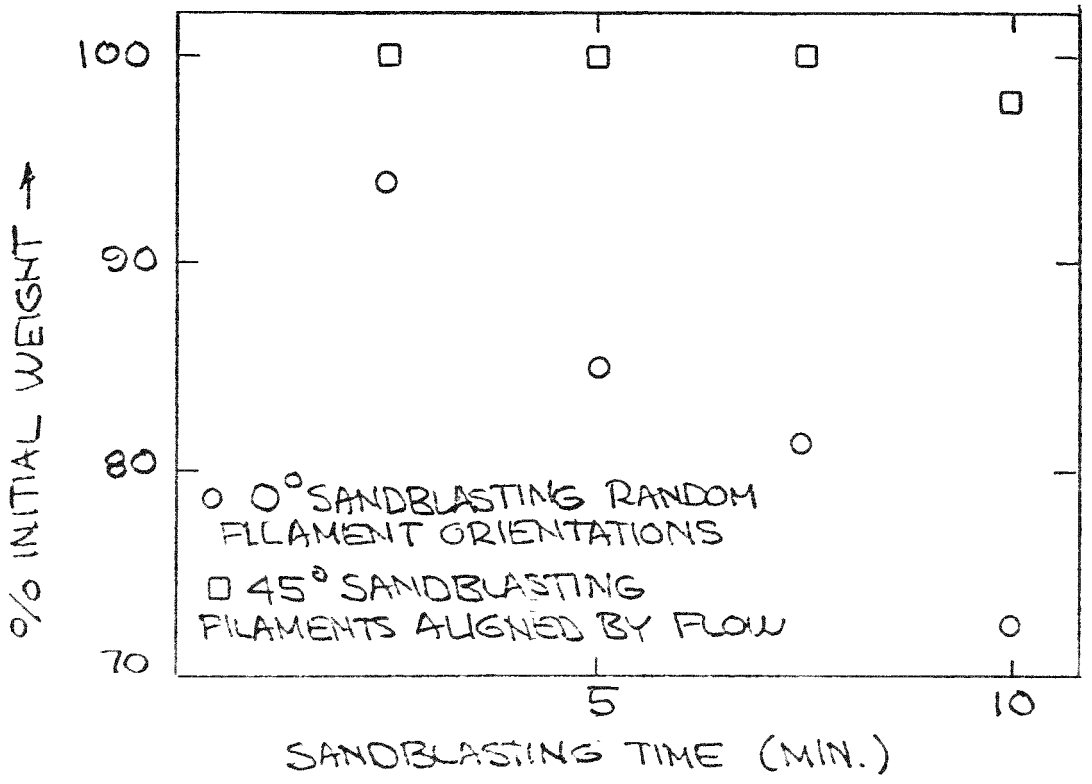

EFFECTS OF ORIENTATION OF FLOW AND FILAMENTS ON ABRASION

FIG. 7

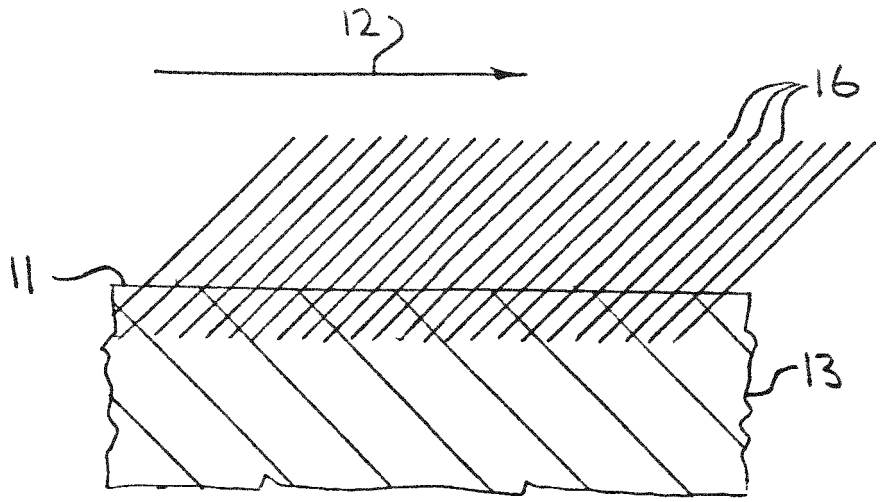

FIG. 8

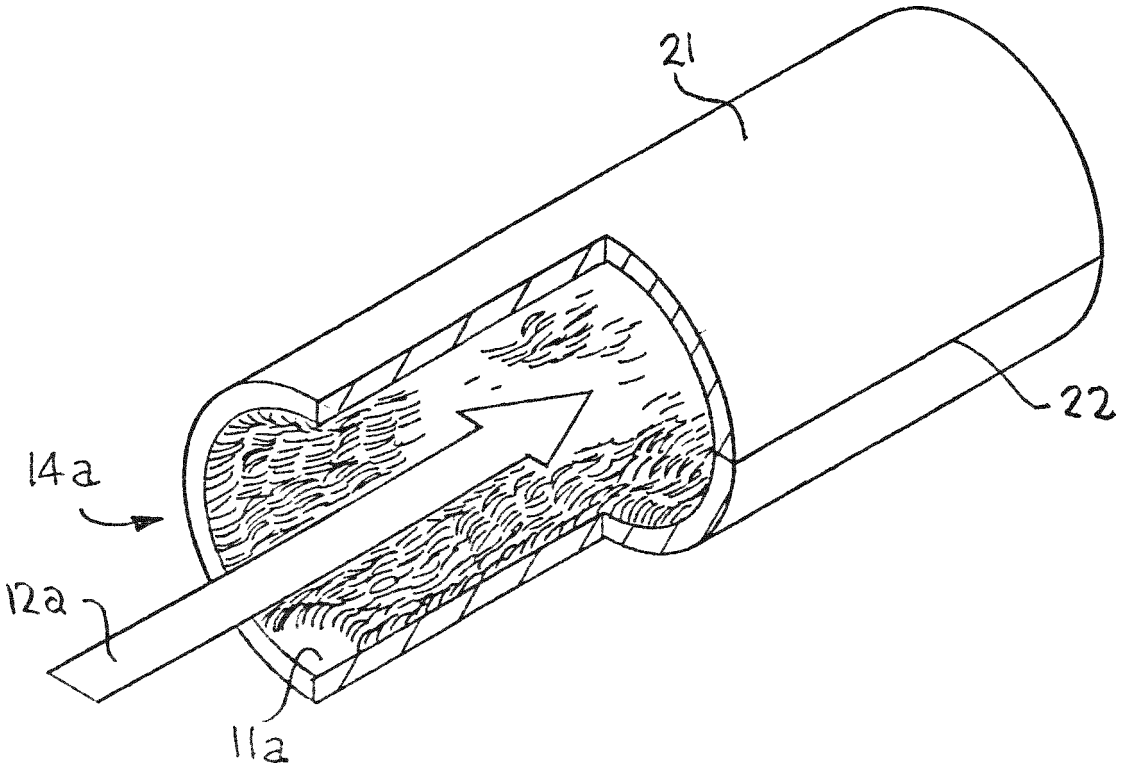

FIG. 9

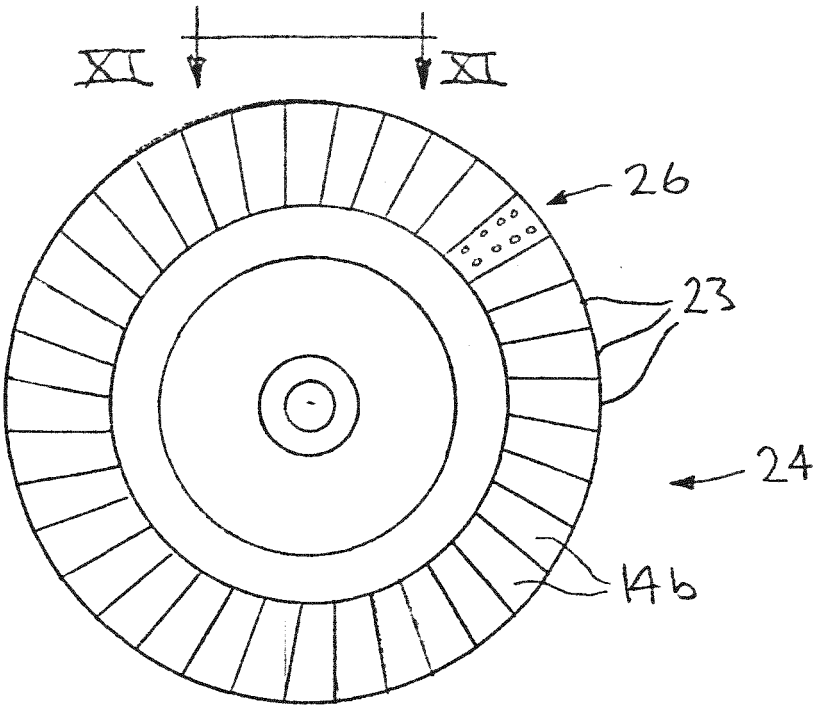

FIG. 10

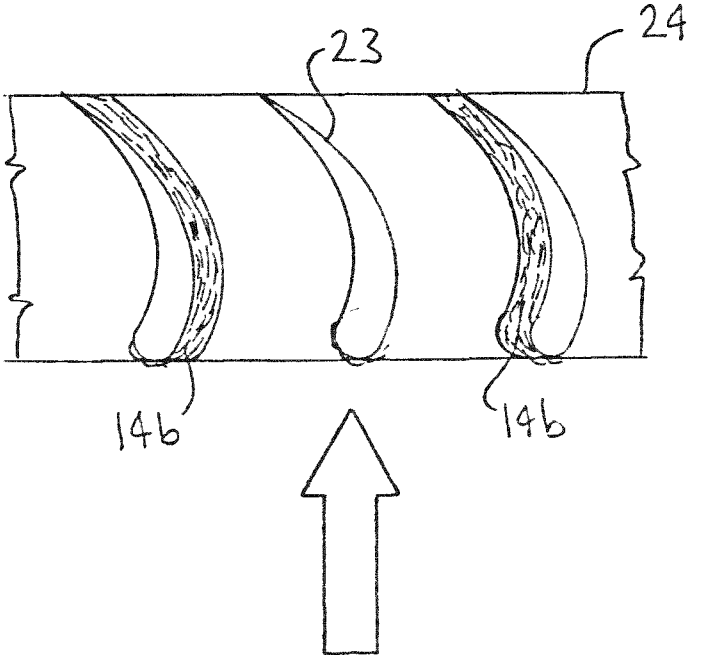

FIG. 11