UCRL-84191
PREPRINT

MASTER

CONF-810323--1

A CONCEPT OF UNDERGROUND NUCLEAR POWER PLANT SITING FOR RETAINING POST ACCIDENT ATMOSPHERES

Barry R. Bowman
Hugh E. Watling
Edward W. McCauley

This report was prepared for submittal to
Symposium on Underground
Siting of Nuclear Power Plants
March 16-20, 1981
Hannover, Federal Republic of Germany

February 1981

Lawrence Livermore Laboratory

This is a preprint of a paper intended for publication in a journal or proceedings. Since changes may be made before publication, this preprint is made available with the understanding that it will not be cited or reproduced without the permission of the author.

DISTRIBUTION OF THIS DOCUMENT IS UNLIMITED

DISCLAIMER

This report was prepared as an account of work sponsored by an agency of the United States Government. Neither the United States Government nor any agency thereof, nor any of their employees, makes any warranty, express or implied, or assumes any legal liability or responsibility for the accuracy, completeness, or usefulness of any information, apparatus, product, or process disclosed, or represents that its use would not infringe privately owned rights. Reference herein to any specific commercial product, process, or service by trade name, trademark, manufacturer, or otherwise does not necessarily constitute or imply its endorsement, recommendation, or favoring by the United States Government or any agency thereof. The views and opinions of authors expressed herein do not necessarily state or reflect those of the United States Government or any agency thereof.

DISCLAIMER

Portions of this document may be illegible in electronic image products. Images are produced from the best available original document.

UCRL--84191

TI85 016668

A CONCEPT OF UNDERGROUND NUCLEAR POWER PLANT SITING FOR RETAINING POST ACCIDENT ATMOSPHERES*

Abstract

Preliminary design criteria developed for a general case show that underground siting of nuclear power reactors is practicable and safe. The concept calls for open-pit excavation in any geological medium to allow construction of the reactor containment structure. A desirable depth of excavation for the containment building and steam generators is about 90 meters. After construction the pit is backfilled with selected earth material. The backfill is designed so that it will confine any radioactivity release that might result from a rupture of the containment structure within a small envelope. The additional cost of putting the nuclear portion of the system underground is only a small fraction of the cost of a conventional surface nuclear power plant. The turbine/generator sets must be located at or near the surface for minimum capital expenditures and operating cost. Underground reactor siting as proposed herein will apparently require no new technology. Closure methods and other relevant experience in the area of underground nuclear device testing are also discussed.

*This work was supported by the United States Nuclear Regulatory Commission under a Memorandum of Understanding with the United States Department of Energy,

DISTRIBUTION OF THIS DOCUMENT IS UNLIMITED

INTRODUCTION

Until recent years, conventional central-station power plants have customarily been located at surface sites close to a fuel source, the power users, and a heat sink. The advent of nuclear power reactors has added a new dimension to the land based siting question; although the location of the fuel source is no longer significant, the hazard posed by an accidental radiation release is.

Advancements in the design and construction of containment vessels and the implementation of engineered safeguards have significantly reduced the probability of a radioactive release to the atmosphere. However, it is desirable to continue to explore methods to improve containment systems to further protect the public in the event of a catastrophic accident.

Underground siting is presented in this study as an alternative. A number of studies have been made[1-5] of underground siting of nuclear power reactors predicated on placing the components in caverns constructed in solid rock masses. The present model shown in Fig. 1 proposes that only the nuclear heat source and the primary steam generator be located underground and that the turbines and other power conversion equipment be located at or very near surface level. The reactor containment building could be built using standard construction techniques and total containment could be accomplished in any geologic formation backfilled with a material having a known permeability. This technique appears to be suitable at little additional cost for all reactor types; water cooled, gas cooled, or fast breeder. This concept developed earlier,[6] is expanded here to include fast closure systems and gas block systems used in nuclear device testing which may be applicable to underground siting.

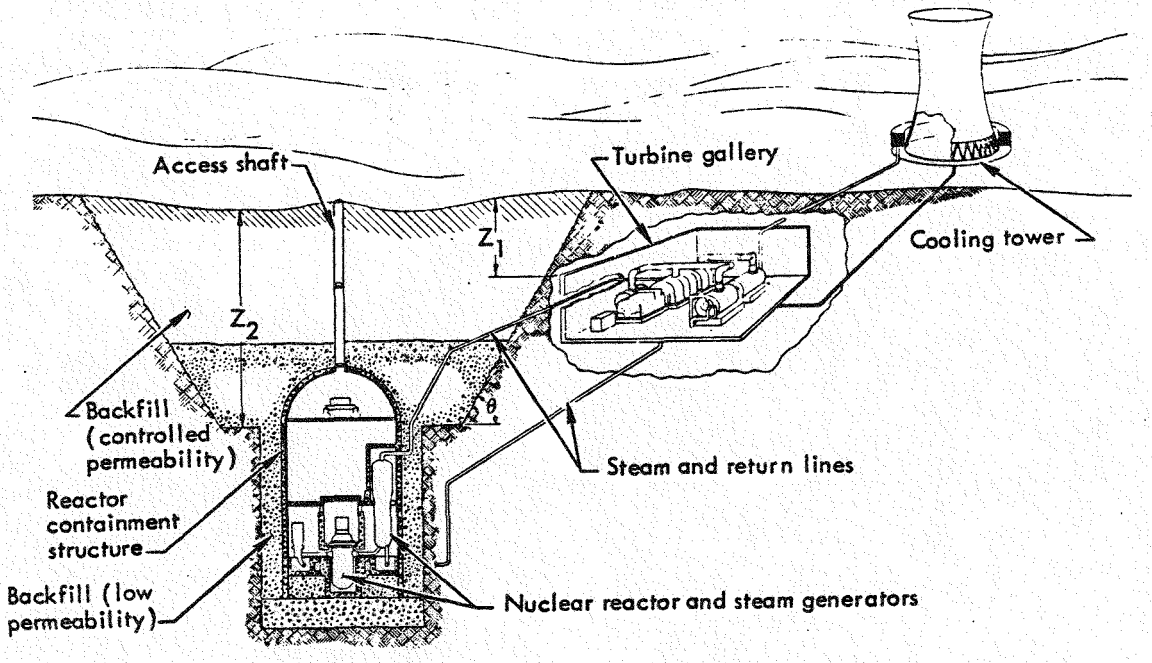

Fig. 1. Concept for underground siting of nuclear power reactors.

Features of the Underground System

To permit realistic comparison with existing power plants, this study was based on a 1100-MWe power plant. The study applies generally to all types of reactors, with the condition that reactor energy is transported to conventional turbine generators using light-water steam.

Accident Model and Its Relation to Test-Site Experience

The peak design pressure in the nuclear system containment structure was taken to be 480 KPa. This is compatible with conventional design pressures and assumes that a loss-of-coolant accident (LOCA) is properly responded to by the emergency core-cooling system (ECCS) and a modest pressure-suppression system.[7] The burial depth of the containment structure was chosen to

provide a nominal 480 KPa static overburden pressure to balance the internal design pressure.

Containing the radioactive products resulting from an underground reactor accident is different from containing the products of an underground nuclear explosion. In the case of the nuclear explosive, the yield is produced within a few hundredths of a microsecond in contrast to a nuclear reactor accident where the majority of the energy release is produced within the core over a period of many microseconds. Then several milliseconds pass while the fuel becomes partially molten, the cladding ruptures, and the fuel and coolant react. Although a large volume of steam may be produced, the pressure rise occurs so slowly that many more milliseconds must pass before the primary pressure vessel ruptures and the containment structure is exposed to high pressure steam. Detailed assessment of the progress of a reactor accident from inception through dynamic response of the pressure vessel, containment structure, and surrounding soil is required to assess the structure response properly. Calculations of this kind are standard to support our normal nuclear testing,[8,9] but require considerable effort and were not performed as part of this study.

Experience with nuclear detonations shows that closure systems for all required penetrations of the reactor structure are entirely practicable. For underground nuclear experiments, reliable pipe-closure systems have been developed that are capable of closing in less than a millisecond while withstanding hundreds of g's of acceleration and high pressures.

Containment-Structure Design Summary

A preliminary static design analysis was performed to obtain sizing criteria for the reactor containment structure shown in Fig. 2, with particular reference to the strength and stability of a large, composite-wall

containment structure.[10,11] The findings include a comparison of the excavation concept with construction of a large cavity in solid rock.[12]

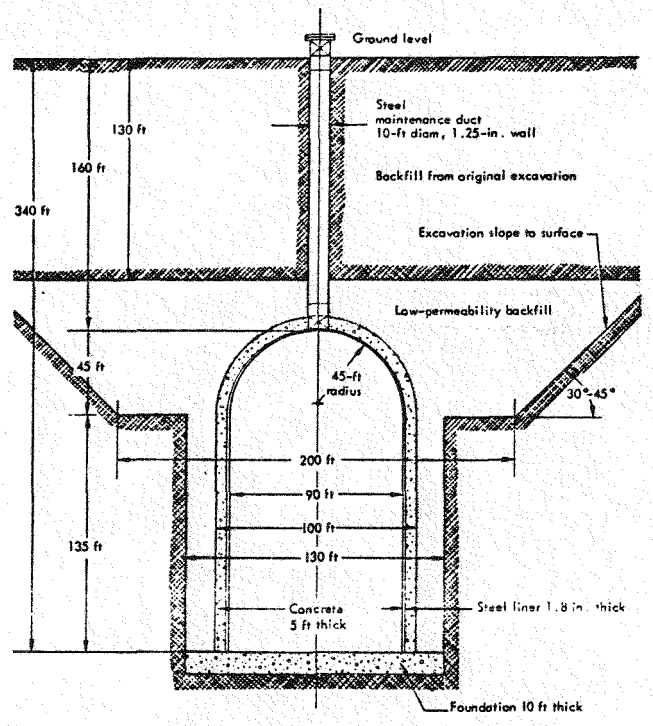

Fig. 2. Reactor containment structure and excavation envelope (no scale).

Table 1 gives dimensions of the steel/concrete composite wall structure for the wet soil condition derived from a static, elastic analysis. A dynamic evaluation of the strength of the containment structure and the permeability characteristics of the backfill material was then performed on the basis of the geometry and dimensions derived from the static study.

The thickness of the steel liner of the containment structure is an important variable from the point of view of manufacturing and cost. The required thickness is based on the peak design pressure and the interaction between the steel liner, concrete shell, and the surrounding soil due to a static head of water acting on the reactor containment structure (the wet soil condition).[10]

The estimated difference in cost between the proposed underground structure in wet soil and a conventional surface structure is only 0.75%. This low cost penalty is based on \$1.07/kg for steel liner in place and \$214/m^3 for concrete in place.

Table 1. Criteria for the wall thickness of the reactor containment structure.

Case	Thickness of steel liner (mm)	Thickness of concrete shell (m)
Surface, conventional	19.1	.6
Underground, dry soil	25.4	.6
Underground, wet soil	45.8	1.5

Thermal and Pumping Considerations

The major performance penalty is associated with thermal and head losses in the working-fluid or condenser-fluid lines. The general conclusion supported by analysis places the turbine at or near the surface.

The thermodynamic system analyzed consisted of steam, feedwater return, and condenser water lines. The sizes of lines analyzed were chosen to conform to an existing plant of the same capacity. To simplify the analysis, it was also assumed that:

1. Pressure drop in the feedwater and condenser line is due only to pipe friction.
2. Fluid properties are constant.
3. Plant thermal efficiency is 33%.
4. Pump efficiency is 85%.
5. Plant electrical cost is \$0.0013/kWh.
6. Inside convection resistance and pipe thermal capacity are negligible.

7. The base ground temperature is 21°C.

8. Piping insulation is equivalent to 150 mm of glass wool.

The magnitude of heat loss and the resulting temperature rise of the environment was determined by treating the question as a one-dimensional radial heat-conduction problem. In the worst case, i.e., the longest pipe lengths, the heat loss is less than 0.04% of the gross electrical output of the plant after only one hour of operation for the insulated case.

On the basis of these calculations, the following conclusions were drawn:

- The turbine generators, condensers, preheaters, and feed pumps should be located at or near the surface.
- Heat losses from the steam and feedwater lines can be sustained even during start-up from a modestly insulated system.
- No new technology is involved in the placement of piping or provision for insulation.
- The resultant rise of environmental temperature during the lifetime of operation should not present any significant problems.

Excavation

Excavation is within the scope of current technology and offers the unique advantage over construction of a large underground opening in rock in that backfill design and material can be selected to enhance the containment if the reactor building is breached.

The scarcity of hard-rock sites in the United States is another reason for seeking a different mode of undergrounding. In addition, the excavation of large volumes of earth or rock is a well-developed technology that can be accomplished at a low cost.[13] Costs for excavation and backfill operations are shown in Fig. 3 as a function of pit depth. In developing these data, the

excavation for the reactor containment structure foundation was considered to be a volume 40 m in diameter by 41 m deep with a medium-independent excavation cost of $28/m^3$.

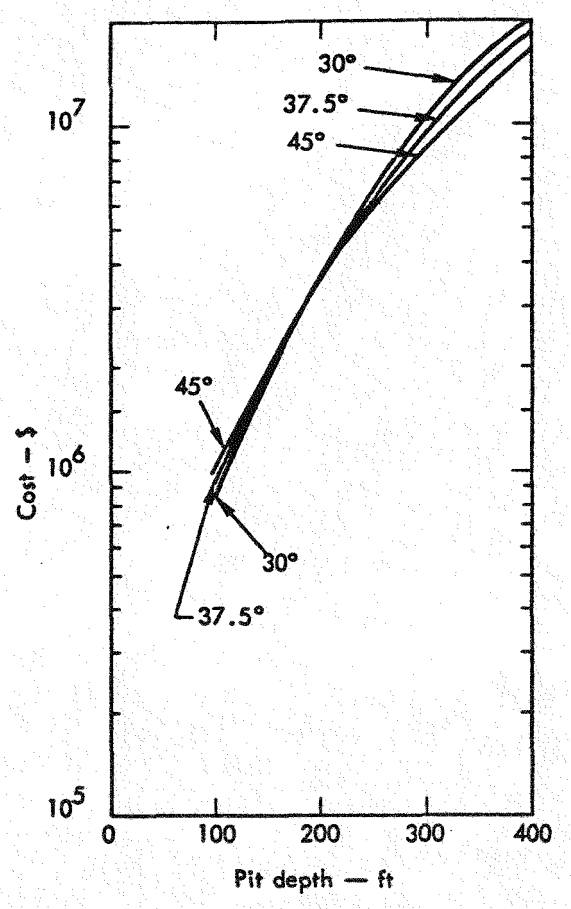

Fig. 3. Excavation and backfill cost for a conical pit and a 130-ft-diam by 135-ft-high shaft at the bottom. Dependence on excavation slope angle is indicated. (See Fig. 2.)

Seismic and Overburden Effects

Once a reactor site has been selected, an investigation of the seismicity and geology of the area is required to estimate both potential earthquake magnitudes and their epicenter locations. With these estimates and knowledge of site soil conditions, peak accelerations, amplitudes, and frequency distributions of ground motion can be calculated.[14]

To predict the ground accelerations from any given earthquake, estimates of the bedrock motion underlying the site are made and detailed site properties are used to compute both surface and subsurface motion above the bedrock level.

Both overburden loading and a horizontal earthquake loading applied at the assumed bedrock level were considered and the results were superimposed.

Figure 4 shows the horizontal component of the acceleration record of the 1971 San Fernando earthquake (Pacoima Dam). This acceleration time history, normalized to 0.2-g maximum acceleration, was used in the analysis.

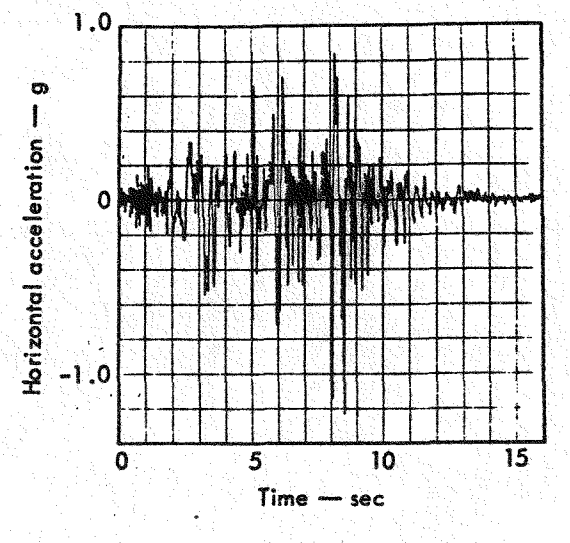

Fig. 4. Pacoima Dam horizontal acceleration record.

The dynamic earthquake analysis considered the five lowest fundamental modes of vibration with 5% critical viscous damping in all modes and materials. The combined containment structure and surrounding media respond primarily in the first mode.

As expected, the analyses show that that the static overburden loading produces stresses that are generally much greater than those produced by the

earthquake loading. These calculations also show that fairly severe earthquake loads can be accommodated.

Design and Selection of Backfill

In the event of a failure of the containment building, the contaminated material would be forced into the surrounding media. The proposed method of excavation permits selection of backfill materials so that the contaminants could be contained.

Containment capability was calculated for a backfill of alluvium using an analytical technique developed for determining containment of underground nuclear explosions[15]. As an example a 3 m layer of low-permeability material was included in the backfill (Region 4 shown in Figure 5) outside the cylindrical portion of the containment structure and directly above the containment structure (Region 2).

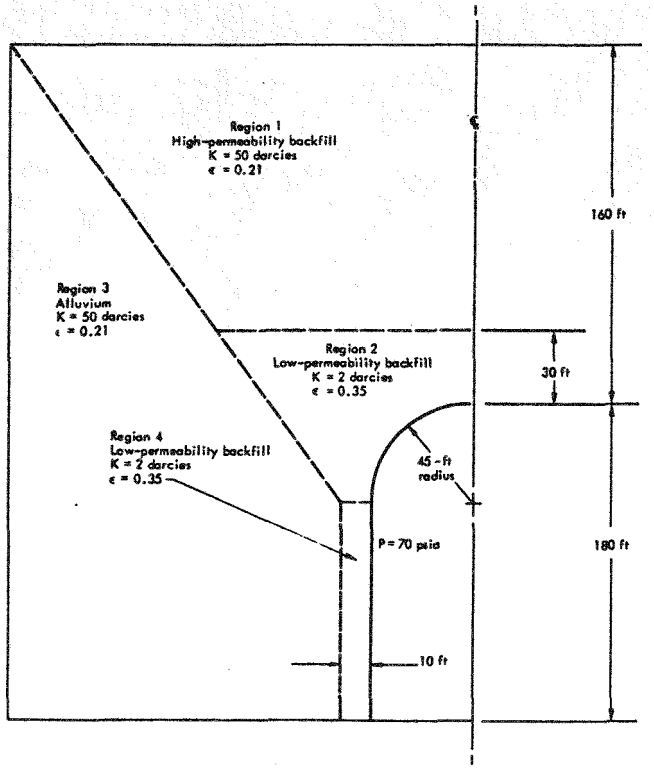

Fig. 5. Zoning for low-permeability backfill design.

Two cases were analyzed which represented severe breaches of the containment building. In Case 1, the gas was assumed to leak from all points on the containment building wall and dome. In Case 2, leakage was assumed to occur from the top of the building, as if the access riser were sheared off.

In both cases, it was conservatively assumed that the gas in the structure obeyed ideal gas laws and that the flow was isothermal. Pressure decay in the structure due to cooling was ignored, however, pressure relief was permitted as a result of mass flowing out of the containment. The initial pressure in the structure was assumed to be 480 MPa. In the actual system, the presence of condensable vapors and structural cooling would reduce the driving pressure available and significantly reduce the motion of the interface between the radioactive and the in situ gases. Subsequent motion of the radioactive gas would then only occur by molecular diffusion.

The results of calculations made for Case 1 show that the contaminated gas front will propagate into the surrounding media a maximum distance of about 2.6 m from the reactor containment structure. Figure 6 shows a plot of the maximum distance from the structure to the gas front as a function of time. After 44 min. the pressure in the containment structure has decayed to the ambient pressure, and the gas front stops. At this time, the gas front is 48 m below the ground surface.

The consequence of permitting leakage only from the access riser attachment (Case 2) is also shown in Fig. 6. Here, the gas front moves a maximum of 3.2 m from the reactor structure to a point 45.7 m below the ground surface. After 118 min., sufficient pressure is no longer available to drive the gas front. Figure 7 shows the pressure decay for both Case 1 and Case 2.

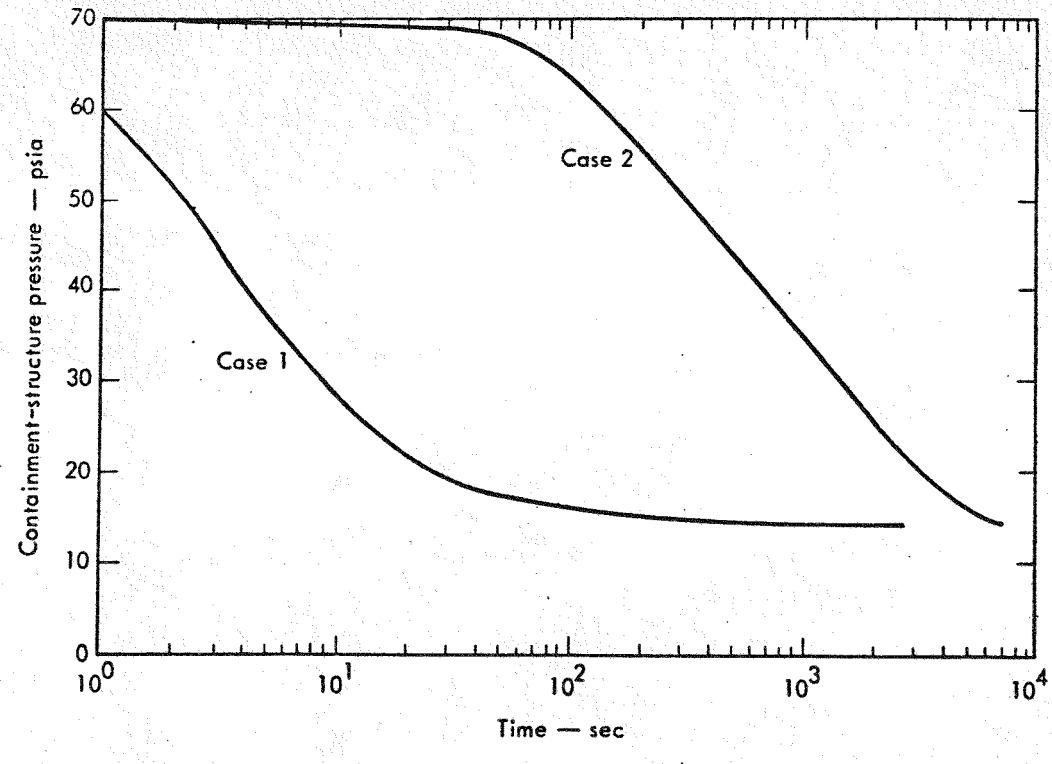

Fig. 6. Internal pressure decay of the containment structure due to flow into porous backfill material.

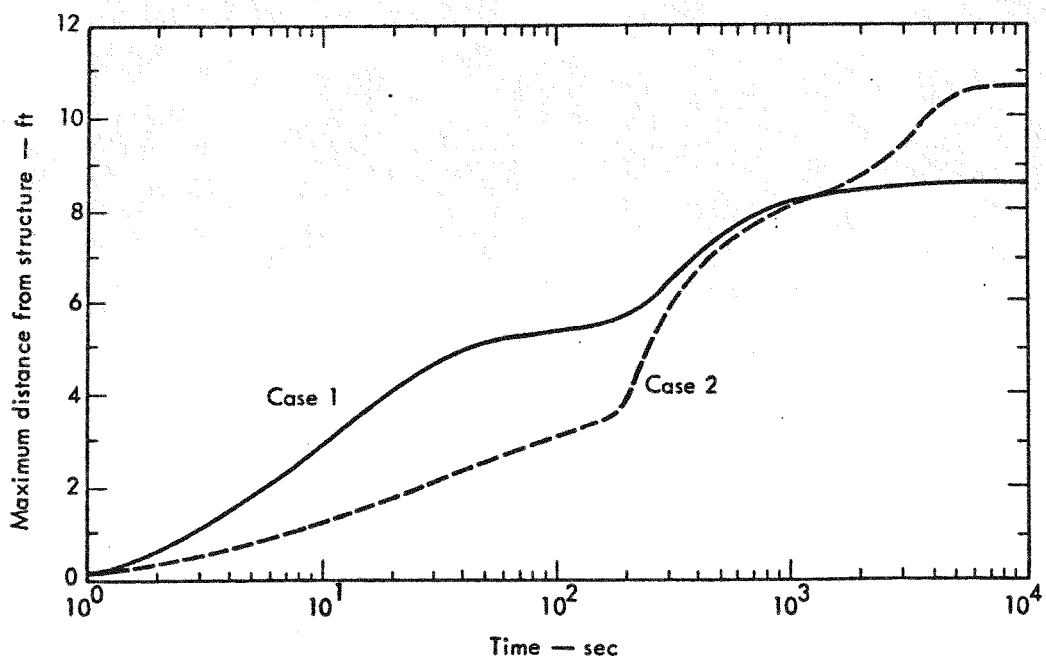

Fig. 7. Radioactive-gas penetration distance.

These calculations indicate that the presence of a lower-permeability layer over the containing vessel prevents leakage to the atmosphere even under "worst case" conditions. The method of backfill also prevents the formation of a consolidated material in which hydrofracture is likely to occur.[16] These predictions show that a serious accident does not present a threat of atmospheric or in situ earth contamination resulting from the complete failure of the reactor containment structure. They also point out the necessity for substantial knowledge of the local lithology and stratigraphy.

Nuclear Testing Closure Experience

In all fast acting closure mechanisms, energy must be stored in some form. This energy can be potential energy or chemical energy. Potential energy storage methods can include compressed springs, suspended weights, or compressed gas, while chemical energy storage implies the use of explosives or gas generators. Each method presents certain advantages and disadvantages. To compare the methods, five criteria are discussed in the following section. They are: 1) time required to released stored energy, 2) operational safety, 3) reliability, 4) ease of reuse, and 5) long term stability.

Closure Time

Time required to close a valve is dependent on the inertia of the mechanism, the amount of energy imparted to the mechanism, and the resistance offered by fluid present in the valve. In general, explosively activated closures are the fastest closing types becase of the high energy density and fast burn rates of explosives. Figure 8 shows an explosive closure which has been designed to seal a .3 meter diameter evacuated pipe in less than one millisecond. The remaining energy storage methods do not have as high an energy density or as fast a release rate as explosives so that the mechanisms

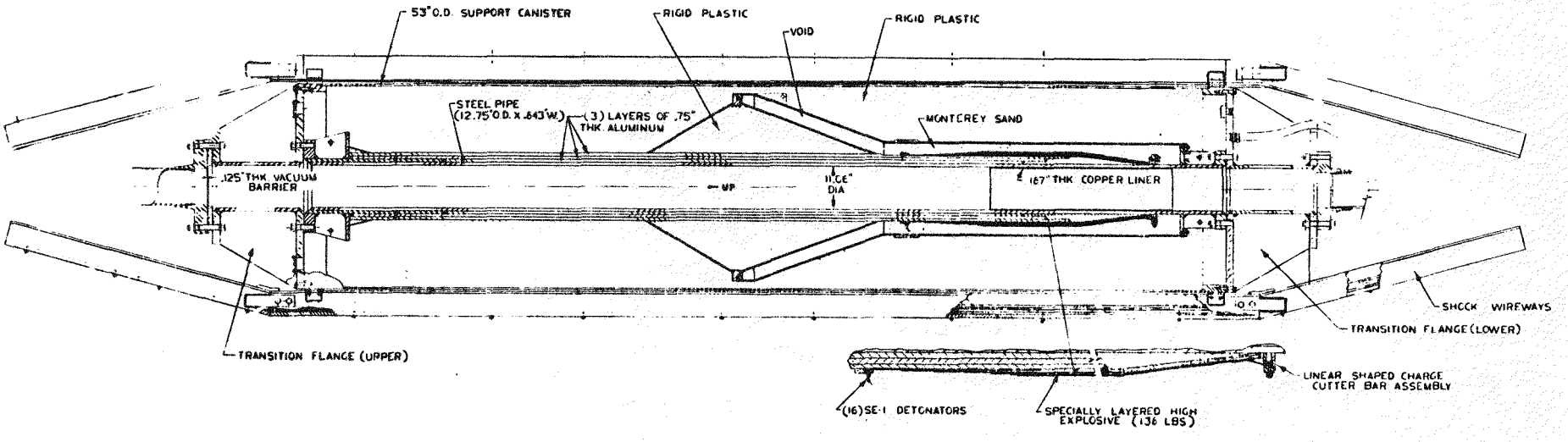

Fig. 8. .3m dia. explosive closure

are generally slower. Figure 9 shows a 64 mm diameter valve which uses a gas generator to release a compressed spring. This valve seals in less than 10 msec. Figure 10 shows a high pressure gas operated valve which closes a 1.2 m diameter orifice in approximately one second.

Operational Safety and Reliability

Operational safety is defined as the assurance of not experiencing a premature or unplanned closure of the sealing mechanism. Reliability, on the other hand, is defined as assurance that the sealing mechanism will operate properly when an initiating command is given. Explosives and gas generators can be made very safe by choosing insensitive types, however, there exits a tradeoff which must be made between safety and reliability. The best compromise is the use of an insensitive explosive or propellant with a detonator, which requires a high energy level to initiate. Stored gas pressure, while not as reliable as explosives, is still very reliable if the proper instrumentation is included to monitor the storage pressure. Most reliability problems with gas pressure devices are associated with the mechanical transfer of gas energy to a working piston or other actuator. In this case problems can usually be avoided by proper clean assembly of the hardware. The operational safety of stored gas is of little concern if redundant mechanical latches or valves are employed to prevent unplanned actuation. An example would be dual activation valves in series. Spring or gravity actuated valves are the least reliable mechanisms because of mechanical problems such as rust, or dirt which can bind a mechanism. This is offset somewhat by a high degree of operational safety. Regardless of which method of energy storage is used, the operational safety and the reliability may be limited by the actuating method. For example, if compressed springs are released by explosive bolts, the safety and the reliability of the

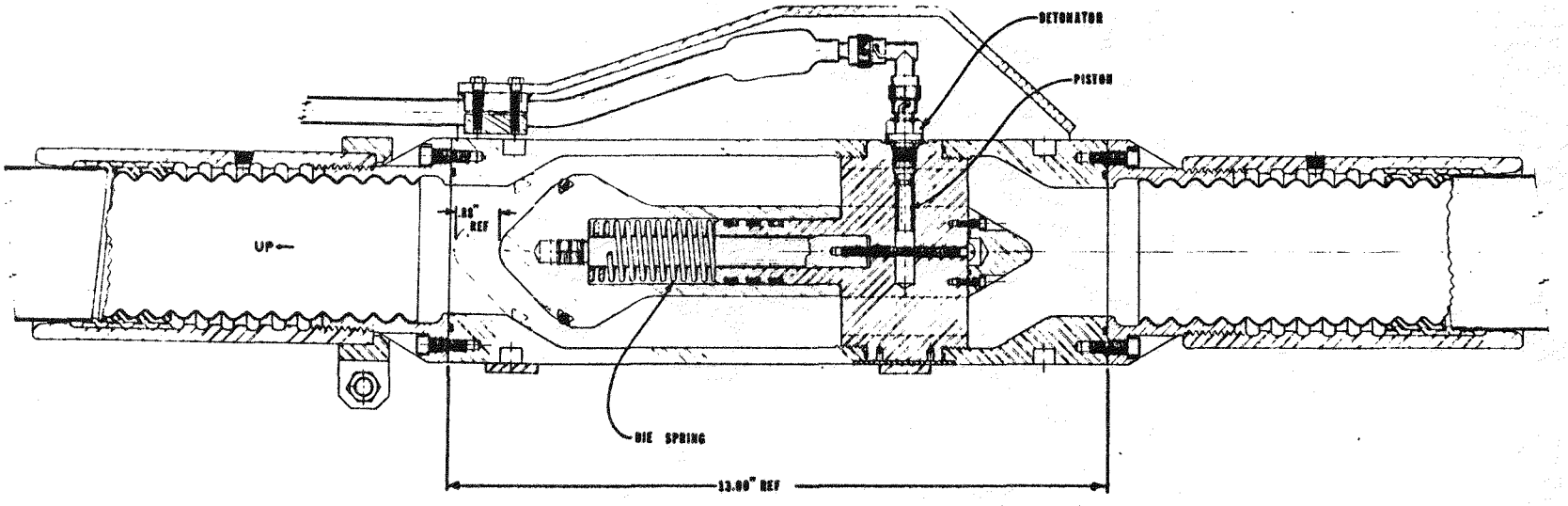

Fig. 9. Chemical Gas Generator Closure

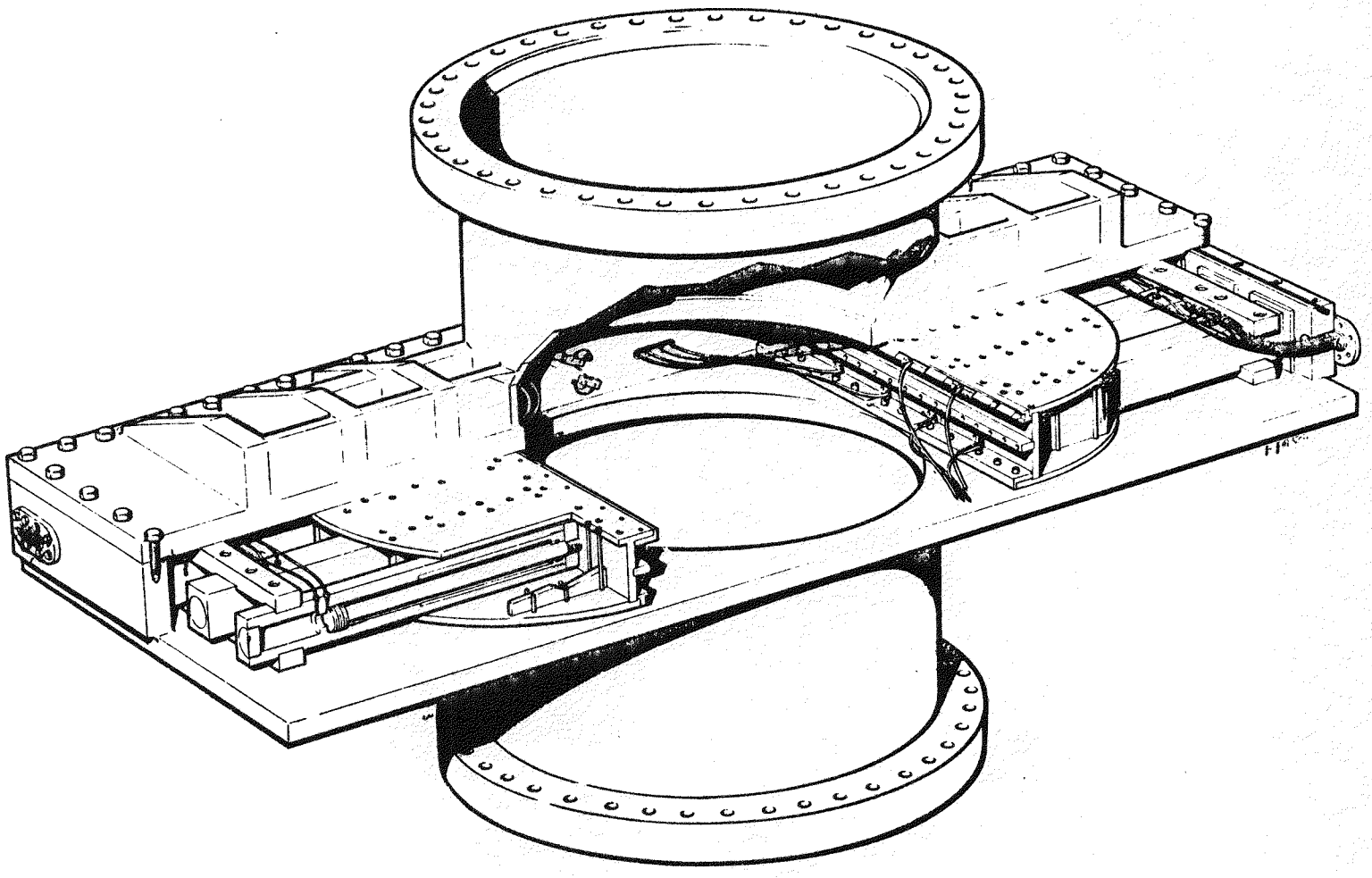

Fig. 10. High Pressure Gas Operated Valve

explosive bolt may determine the limits of the valve. The firing system which is used to fire the explosive bolts may also be the determining link in the overall system. In summary, when operational safety or reliability is addressed, the entire system must be evaluated including the valve and the actuating command chain.

Ease of Reuse

In designing a closure mechanism, it must be determined if the unit will be used only once and remain closed, or if it will be used repeatedly. Closures which are activated by explosives are, in general, not reusable, and in many cases cannot be opened once they have been closed. All other activation methods may be reusable depending upon the mechanical design of the valve. If reuse is required, particular attention must be paid to the seals because fast movement may destroy soft sealing materials such as rubber, or damage metal sealing surfaces.

Long Term Stability

Long term stability relates to the reliability and safety of the closure over its useful life. Explosives vary in stability and can become sensitive and unusable in a few years or may remain stable for more than twenty years. This also applies to propellants used in gas generators. For this reason, the closure mechanism must be designed to allow replacement of these components at scheduled times to alleviate this concern. Stored gas pressure can leak over a long period of time so that provisions are also required for periodic pressure measurement and recharging. Mechanical systems may become corroded or dirty and must also receive scheduled maintenance. In addition to maintenance of the closure mechanism, firing systems must also be inspected and replaced as needed. In general, long term reliability is a function of quality control more than specification of a particular closure.

Having examined the advantages and disadvantages of the different energy storage methods, the designer must decide which method to use based upon the closure requirements. How large must the closure be? What fluid is to be sealed? What temperatures and pressures are involved? How fast must the closure act and for how long must it seal?

The containment requirements considered in this study were based on the previously defined peak pressure in the nuclear system containment structure of 480 KPa. The penetrations which must be sealed include four general types and sizes. These are: 1) personnel and equipment access, 2) air ventilation lines, 3) piping for the transfer of steam to the turbines, and for the return of condensate and 4) electrical cables.

Personnel and equipment access doors are the largest penetrations into the reactor structure but they are only used on an intermittent basis, and can be constructed in series. In this way, one set of doors can always be closed so that the penetration is, in effect, always sealed. Series construction allows leak testing of the seals by evacuation between doors while both are closed and observation of any pressure rise. Ventilation lines must be open at all times so a fast closing seal must be incorporated. The normal working fluid is low pressure dry air at near ambient temperature, however, in the event of an accident, large quantities of steam may be present. Openings may be as large as one meter in diameter and closure times should be less than 0.5 second. A valve operated by gas pressure would seem appropriate. The valve could be either a gate valve or a butterfly valve. Steam and condensate return lines must also incorporate a fast acting closure system. The working temperature and pressure may be more than 20 MPa and 700°C; line diameters may be close to one meter. Closure times for this system should be as fast as those for the ventilation lines. A gas operated valve would provide the speed required, however, a great deal of force would be required to close against

such high pressures. An explosively operated valve placed before a slower gas operated or spring operated valve may be appropriate. This would allow a reduction of pressure at the main sealing valve.

Electrical cables may also provide a leak path from the reactor structure and must be sealed. Cable blockages can be a permanent and would be constructed with the building installation. Electrical cables may be divided into two general types; coaxial and stranded conductor cables. Coaxial cables consist of a solid center conductor surrounded by a dielectric foam or other material, an outer conductor, and a jacket. By using a closed cell foam for the dielectric and proper construction techniques to seal between the jacket and the outer conductor, this type of cable can be built so as not to leak gas. Stranded conductor cables must contain a discreet gas block as shown in Fig. 11. At this point the cable is cut and each conductor is inserted into a solid connection. The entire unit is then sealed in an epoxy. An alternate method is to use certain types of commercially available cable connectors which can be sealed in epoxy.

CONCLUSIONS AND RECOMMENDATIONS

The results of this study should still be regarded as preliminary in demonstrating that underground siting is a viable alternative to present practice for nuclear reactor power plants. The first step has been taken by showing that underground installation can be accomplished with existing technology. Much of the technology developed for the underground containment of nuclear devices can be used in the design of underground sites. This technology has been developed from extensive analytical, experimental, and field experience.

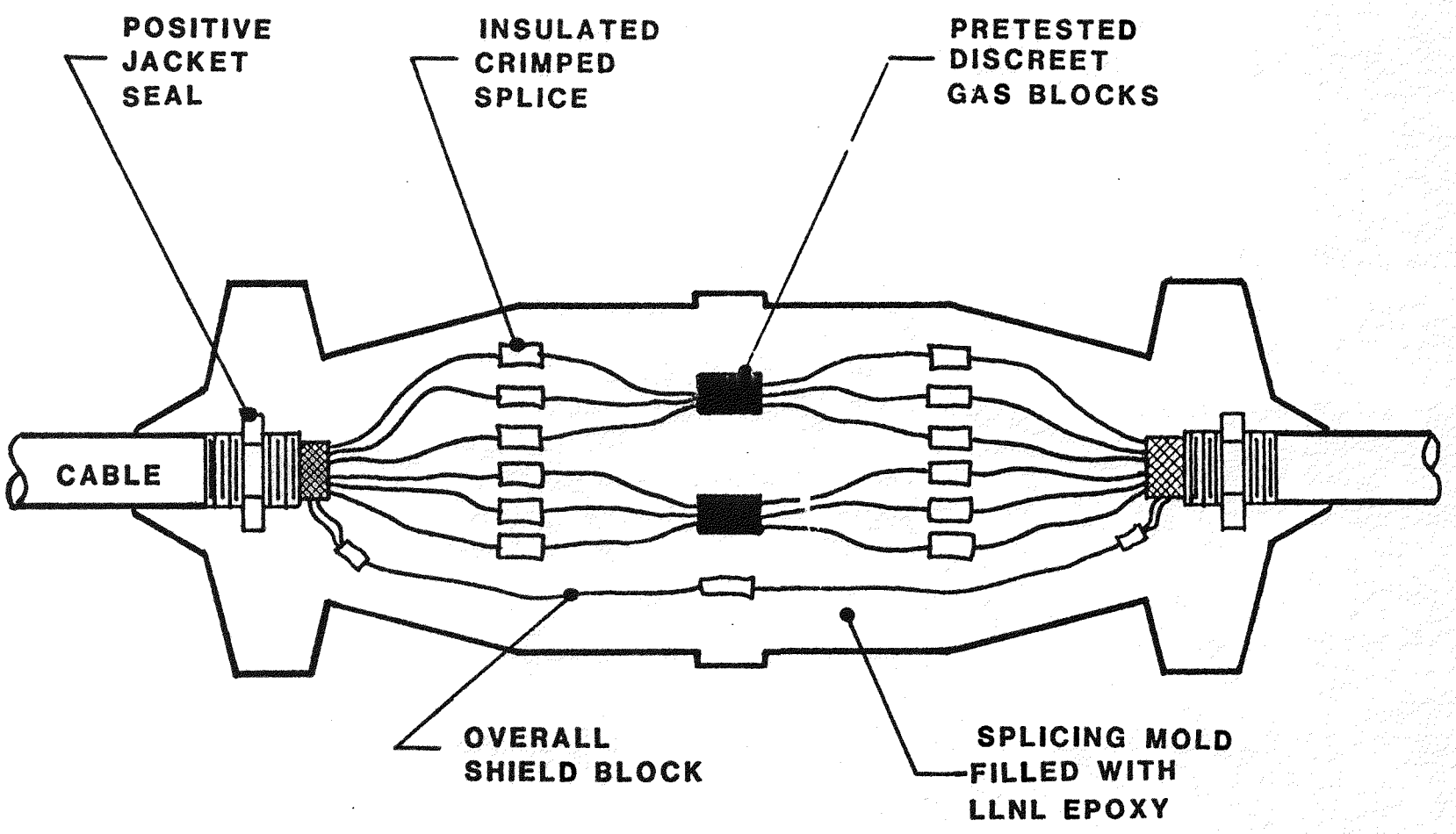

Fig. 11. Cable Gas Block

If the conclusions are supported and the underground reactor becomes a viable alternative, overall plant construction time could be materially reduced by shortening the time from plant proposal to construction permit. This time savings would result from simpler (faster) review for licensing made possible by the increased inherent safety.

As a result of this initial study, the following conclusions are drawn.

1. By siting large power reactors underground in suitably backfilled excavations, harmful radiation from the worst case possible accident can be confined.
2. Underground siting in the manner proposed applies to any type of light water reactor.
3. The additional costs of underground siting are negligible. In fact, shortened construction times due to reduced environmental-impact effects can be expected, with consequent cost savings.
4. Closure technology developed for containment of underground nuclear tests is directly applicable to underground siting or reactors.

References

1. F. C. Olds, "Underground Siting for Nuclear Power Plants," Power Engineering, pp. 34-39 (October 1971).
2. Conference on Unique Siting Concepts for Nuclear Power Plants, Joint Committee on Atomic Development and Space, California State Legistlature (May 1972).
3. M. D. Watson, et al., Underground Nuclear Power Plant Siting, EQL Report 6, Environmental Quality Laboratory, California Institute of Technology (Sept. 1972).

References (cont'd)

4. Underground Nuclear Power Plants-A Preliminary Evaluation, UEC-UNP-710701, United Engineers and Constructors, Inc. (July 1971).

5. B. J. Smernoff, Underground Siting of the LMFBR Demonstration Plant: A Serious Alternative, Hudson Institute Paper 1688/2-P (Sept. 1972).

6. A. Blake, V. Karpenko, E. McCauley, C. Walter, "A Concept for Underground Siting of Nuclear Power Reactors," Lawrence Livermore National Laboratory Report UCRL-51408, 1973.

7. G. C. Masche, Systems Summary of a Westinghouse Pressurized Water Reactor Nuclear Power Plant, Westinghouse Electric Corp - PWRSD (1971).

8. M. Harzman, Diamond Mine Cavity Static Stress Field Calculation, Lawrence Livermore National Laboratory, Internal Document END 71-17 (June 1971).

9. F. J. Tokarz, Users Manual for NTEDYNS, Lawrence Livermore National Laboratory, Rept. UCID-30027 (January 1971).

10. A. Blake, Proposed Stress Analysis Criteria for Statically Loaded Deep-Hole Casing Systems, Lawrence Livermore National Laboratory, Rept. UCRL-50561 (1968).

11. A. Blake and J. P. Dow, Analysis of Structural Response Data on Buried Structures in the Noggin and Crew Underground Nuclear Tests, Lawrence Livermore National Laboratory, Rept. UCRL-50867 (1970).

12. A. Blake, Strength of Underground Cavities, Lawrence Livermore National Laboratory, Internal Document ENN72-59 (1972).

13. D. L. Wooster, Undergrounding of Nuclear Reactors by Open Pit Excavation, Lawrence Livermore National Laboratory, Internal Codument ENN73-30 (1973). Readers outside the Laboratory who desire further information on LLNL internal documents should address their inquiries to the Technical Information Department, Lawrence Livermore National Laboratory, Livermore, CA 94550.

References (cont'd)

14. D. L. Bernreuter and F. J. Tokarz, Design Basis Earthquakes for the Lawrence Livermore National Laboratory Site, Lawrence Livermore National Laboratory, Rept. UCRL-51193 (1972).

15. B. R. Bowman, TWIG-A Computer Code for the Calculation of Two Dimensional Ideal Gas Flow in Porous Media, Lawrence Livermore National Laboratory, Internal Document ENN72-187 (1972).

16. J. H. Pitts, Gas Initiated Crack Propagation in a Porous Solid-A Progress Report, Lawrence Livermore National Laboratory, Rept. UCID-16236 (1973).

DISCLAIMER

This document was prepared as an account of work sponsored by an agency of the United States Government. Neither the United States Government nor any agency thereof, nor any of their employees, makes any warranty, expressed or implied, or assumes any legal liability or responsibility for the accuracy, completeness, or usefulness of any information, apparatus, product, or process disclosed, or represents that its use would not infringe privately owned rights. Reference herein to any specific commercial product, process, or service by trade name, trademark, manufacturer, or otherwise, does not necessarily constitute or imply its endorsement, recommendation, or favoring by the United States Government or any agency thereof. The views and opinions of authors expressed herein do not necessarily state or reflect those of the United States Government or any agency thereof.