F2189(8)(2(1)

CONF-8903117--

SAND89—0463 • UC—234
Unlimited Release
Printed February 1989

Proceedings of the Annual Solar Thermal Technology Research and Development Conference

March 8 and 9, 1989

W. A. Couch, Editor

Prepared by
Sandia National Laboratories
Albuquerque, New Mexico 87185 and Livermore, California 94550
for the United States Department of Energy
under Contract DE-AC04-76DP00789

Issued by Sandia National Laboratories, operated for the United States Department of Energy by Sandia Corporation.

Printed in the United States of America
Available from
National Technical Information Service
U.S. Department of Commerce
5285 Port Royal Road
Springfield, VA 22161

NTIS price codes
Printed copy: A07
Microfiche copy: A01

Distribution
Category UC-234

SAND-89-0463
Unlimited Release
Printed February 1989

Proceedings of the Annual Solar Thermal Technology Research and Development Conference

SAND--89-0463

DE89 010538

March 8 - 9, 1989

Arlington, Virginia

Sponsored by the U.S. Department of Energy
Organized and Hosted by Sandia National Laboratories and
The Solar Energy Research Institute

ABSTRACT

The Annual Solar Thermal Technology Research and Development Conference is being held at the Holiday Inn Crowne Plaza in Arlington, Virgina, March 8 and 9, 1989. This year the conference is meeting in conjunction with SOLTECH '89. SOLTECH '89 is a jointly sponsored meeting of the Solar Energy Industries Association, Interstate Solar Coordination Council, Sandia National Laboratories and the Solar Energy Research Institute. This report contains the agenda, extended abstracts and most significant visual aids used by the speakers during the Solar Thermal Technology research and development sessions. The program is divided into three sessions: Solar Electric Technology, Non-Electric Research and Development and Applications, and Concentrators.

ACKNOWLEDGMENTS

I would like to acknowledge and express my appreciation for the support provided by many individuals whose contributions were essential to the success of the conference. Special recognition and thanks are due to Russell Hewett who was instrumental in helping to organize te conference. Thanks are also expended to the Session Chairpersons: Paul Klimas, Bim Gupta, John Thornton, and John Holmes, for securing speakers and organizing and conducting their sessions.

William A. Couch

AGENDA
SOLAR THERMAL TECHNOLOGY PROGRAM ANNUAL R&D REVIEW

REGISTRATION - 10:00 a.m. - 1:00 p.m.

Session 1: SOLAR ELECTRIC TECHNOLOGY
(March 8, 1989, 1:00 - 5:00 p.m.)

- SESSION 1 CHAIRMAN: Paul Klimas (SNLA)

	OVERVIEW PRESENTATIONS	SPEAKERS	TIME
(1)	*Welcome and Announcements*	*H. Coleman (DOE/HQ)*	*1:00 - 1:10*
(2)	*DOE Cooperative Programs: Overview*	*J. Otts (SNLA)*	*1:10 - 1:20*
(3)	*Cummins Free Piston Stirling Engine*	*J. Davis (Cummins Engine Co.)*	*1:20 - 1:35*
(4)	*Solar Thermal Electric Systems:Overview*		
	• *Utility Study Activities*	*T. Hillesland, Jr. (Pacific Gas & Electric)*	*1:35 - 1:55*
	• *Advanced Electric Generation Technology*	*P. Klimas (SNLA)*	*1:55 - 2:15*
(5)	*Solar Concentrators Development Overview*	*J. Holmes (SNLA)*	*2:15 - 2:35*
(6)	*Photochemical Systems and Emerging Applications Overview*	*B. Gupta (SERI)*	*2:35 - 2:55*
(7)	*Status of Receivers: Overview*		
	• *Reflux Distributed Receivers*	*R. Diver (SNLA)*	*2:55 - 3:10*
	• *Advanced Central Receivers*	*J. Chavez (SNLA)*	*3:10 - 3:30*
BREAK			*3:30 - 3:45*

AGENDA
SOLAR THERMAL TECHNOLOGY PROGRAM ANNUAL R&D REVIEW

Session 1: SOLAR ELECTRIC TECHNOLOGY
(continued...)

TECHNICAL PRESENTATIONS	SPEAKERS	TIME
(8) Dish Conversion Systems		
• *Heat Pipe Solar Receivers for Stirling Engines*	*D. Adkins (SNLA)*	*3:45 - 4:00*
• *Pool Boiler Receiver Bench Test Results*	*C. Andraka (SNLA)*	*4:00 - 4:15*
• *Kinematic Stirling Engines for Solar Thermal Electric Systems*	*K. Linker (SNLA)*	*4:15 - 4:30*
• *Status of DOE/NASA Advanced Stirling Conversion System Program*	*R. Shaltens (NASA)*	*4:30 - 4:45*
(9) Fluid and Thermal Behavior of the Direct Absorption Receiver	*M. Bohn (SERI)*	*4:45 - 5:00*
ADJOURN		

SOLTECH '89 RECEPTION in the Exhibition Hall 5:00 p.m.

AGENDA
SOLAR THERMAL TECHNOLOGY PROGRAM ANNUAL R&D REVIEW

SESSION 2: NON-ELECTRIC R&D AND APPLICATIONS
(March 9, 1989, 8:00 a.m. - 11:40)

- SESSION 2 CO-CHAIRMEN: Bim Gupta (SERI) & John Thornton (SERI)

TECHNICAL PRESENTATIONS	SPEAKERS	TIME
(1) Opportunities for the Solar Processing of Toxic Wastes	*J. Thornton (SERI)*	*8:00 - 8:20*
(2) High Flux/High Temperature Solar Destruction of Hazardous Waste		
• *Laboratory Experiments*	*B. Dellinger (U of Dayton)*	*8:20 - 8:40*
• *Solar Furnace Experiments - I*	*G. Nix (SERI)*	*8:40 - 9:00*
• *High-Temperature Solar Destruction of Hazardous Wastes*	*J. Fish (SNLA)*	*9:00 - 9:20*
(3) Solar Detoxification of Organics in Water		
• *Research on Destruction of Organics in Dilute Aqueous Solutions*	*J. Webb (SERI)*	*9:20 - 9:40*
• *Engineering Studies of the Photocatalytic Destruction of Organics in Water*	*C. Tyner (SNLA)*	*9:40 - 10:00*
BREAK		*10:00 - 10:20*

AGENDA
SOLAR THERMAL TECHNOLOGY PROGRAM ANNUAL R&D REVIEW

SESSION 2: NON-ELECTRIC R&D AND APPLICATIONS
(Continued...)

TECHNICAL PRESENTATIONS	SPEAKERS	TIME
(4) High Concentration Optics		
• *Approaching the Irradiance of the Sun Through the Application of Nonimaging Optics*	*R. Winston (U of Chicago)*	*10:20 - 10:40*
(5) Emerging Ideas and Concepts		
• *Solar Induced Surface Transformation of Materials (SISTM)*	*R. Pitts (SERI)*	*10:40 - 11:00*
• *Solar Treatment of Carbon Fibers*	*D. O'Neil (GTRI)*	*11:00 - 11:20*
• *Photo-Assisted Solar Thermal Reactions*	*W. Wentworth (U of Houston)*	*11:20 - 11:40*
ADJOURN		

LUNCH (on your own) and Free Time for Viewing SOLTECH '89 Displays in the Exhibition Hall *12:00 noon*

AGENDA
SOLAR THERMAL TECHNOLOGY PROGRAM ANNUAL R&D REVIEW

SESSION 3: CONCENTRATORS
(March 9, 1989, 1:30 - 4:00 p.m.)

- SESSION 3 CHAIRMAN: John Holmes (SNLA)

TECHNICAL PRESENTATIONS	SPEAKERS	TIME
(1) Introduction	*J. Holmes (SNLA)*	*1:30 - 1:40*
(2) Membrane Concentrators		
• *Stretched Membrane Heliostats*	*A. Konnerth, III (Solar Kinetics, Inc.)*	*1:40 - 2:00*
• *An Improved Stretched Membrane Heliostat Mirror Module*	*K. Beninga (SAIC)*	*2:00 - 2:20*
• *Development of a Stretched Membrane Point Focus Concentrator*	*G. Hutchison (SKI)*	*2:20 - 2:40*
• *Structural and Optical Modeling of Non-Axisymmetrically Deformed Membrane Dish Concentrators*	*T.J. Wendelin (SERI)*	*2:40 - 3:00*
BREAK		*3:00 - 3:20*
(3) Structural Issues		
• *Development of a Low Cost Heliostat Drive*	*W. Heller (Peerless Winsmith)*	*3:20 - 3:40*
(4) Materials		
• *Optical Performance and Durability of Silvered Polymer Mirrors*	*P. Schissel (SERI)*	*3:40 - 4:00*

ADJOURN

Annual Solar Thermal Technology R&D Conference

Conference Objectives

The Annual Solar Thermal Technology R&D Conference provides a review and status update of Sandia's and SERI's work in Solar Electric Technology, Non-Electric R&D Applications, and Concentrators. This project is sponsored by the United States Department of Energy as part of its Solar Thermal Technology Program. The objectives of the meeting are:

- Publicize and increase the awareness of recent R&D results
- Provide a forum for discussion among university, industry and federal scientists and engineers
- Publicize potentially promising emerging and innovative new applications of the solar thermal technologies
- Solicit input from present and potential users of the technologies for inclusion in the near- and long-range R&D program plans

CONTENTS

SESSION 1 - SOLAR ELECTRIC TECHNOLOGY

Solar Thermal Electric Systems: Overview

Status of Receivers: Overview

Dish Conversion Systems

SESSION 2 - NON-ELECTRIC R&D AND APPLICATIONS

Introduction

High Flux/High Temperature Solar Destruction of Hazardous Waste

Solar Detoxification of Organics in Water

High Concentration Optics

SESSION 2 - NON-ELECTRIC R&D AND APPLICATIONS (cont'd)

Emerging Ideas and Concepts

SESSION 3 - CONCENTRATORS

Membrane Concentrators

Structural Issues

Materials

FOREWORD

The research and development described in this document was conducted within the U.S. Department of Energy's (DOE) Solar Thermal Technology Program. The goal of the Solar Thermal Technology Program is to advance the engineering and scientific understanding of solar thermal technology, and to establish the technology base from which private industry can develop solar thermal power production options for introduction into the competitive energy market.

Solar thermal technology concentrates solar radiation by means of tracking mirrors or lenses onto a receiver where the solar energy is absorbed as heat and converted into electricity or incorporated into products as process heat. The two primary solar thermal technologies, central receivers and distributed receivers, employ various point and line-focus optics to concentrate sunlight. Current central receiver systems use fields of heliostats (two-axis tracking mirrors) to focus the sun's radiant energy onto a single tower-mounted receiver. Parabolic dishes up to 17 meters in diameter track the sun in two axes and use mirrors to focus radiant energy onto a receiver. Troughs and bowls are line-focus tracking reflectors that concentrate sunlight onto receiver tubes along their focal lines. Concentrating collector modules can be used alone or in a multi-module system. The concentrated radiant energy absorbed by the solar thermal receiver is transported to the conversion process by a circulating working fluid. Receiver temperatures range from 100°C in low-temperature troughs to over 1500°C in dish and central receiver systems.

The Solar Thermal Technology Program is directing efforts to advance and improve promising system concepts through the research and development of solar thermal materials, components, and subsystems, and the testing and performance evaluation of subsystems and systems. These efforts are carried out through the technical direction of DOE and its network of national laboratories who work with private industry. Together they have established a comprehensive, goal-directed program to improve performance and provide technically proven options for eventual incorporation into the Nation's energy supply.

To be successful in contributing to an adequate national energy supply at reasonable cost, solar thermal energy must eventually be economically competitive with a variety of other energy sources. Components and system-level performance targets have been developed as quantitative program goals. The performance targets are used in planning research and development activities, measuring progress, assessing alternative technology options, and making optimal component developments. These targets will be pursued vigorously to insure a successful program.

To provide the most current and significant research and development information from the Solar Thermal Technology Program, an annual review features invited technical presentations and reviews of scientific and engineering progress. It provides participants with an opportunity to appraise the full range of R&D paths being pursued in the federal and private sectors to achieve long-term program goals. In addition, the annual review provides a forum on recent achievements in various disciplines that are relevant and directly applicable to solar thermal technology. Speakers from private industries, universities and federal laboratories highlight recent achievements, new and innovative approaches and future plans.

The 1989 Annual Review is being held in conjunction with SOLTECH '89 -- the solar technology trade show and exhibition sponsored by the Solar Energy Industries (SEIA); the show encompasses all solar technologies. The Solar Thermal Technology position of the Conference is March 8 and 9 in Washington, D.C.

SESSION 1

WELCOME AND ANNOUNCEMENTS

Howard Coleman, DOE/HQ

A REVIEW OF THE DEPARTMENT OF ENERGY'S COOPERATIVE RESEARCH AND DEVELOPMENT PROGRAMS

by

John Otts
Sandia National Laboratories

ABSTRACT

An assessment of the development status of various solar thermal technologies leads to the conclusion that, like fossil-fuel plants, improvements in cost effectiveness can best be achieved by fielding systems, monitoring their performance, and integrating these field experiences into improved designs. As a result, a new effort has been initiated by the DOE Solar Thermal Program, which is being implemented through Sandia National Laboratories and the Solar Energy Research Institute. The primary goal of the effort is to accelerate field application of improved solar electric systems. This new initiative consists of two major programs.

The first program, called "next-generation user systems", focuses on significantly reducing the cost of electric energy production in present commercially available solar energy systems. The goals of this first program are short term and are aimed at enhancing the ability of current solar electric systems to become more competitive in the marketplace. To achieve this goal, Sandia National Laboratories, as task leader, in cooperation with the Solar Energy Research Institute, is in the process of selecting one or more industrial partners to participate in a cost shared R&D program where the partners share at least 50 percent of the total costs. All efforts, including operation of the modified system and demonstration of its economic performance potential, are to be completed by the end of FY 1992.

A Request for Proposals has been issued to the companies that responded with expressions of interest to a public notice published in the Commerce Business Daily. We are currently waiting for the proposals to be completed. Upon their receipt they will be technically evaluated and scored to establish a competitive range. Contractual procedures will be established with those qualified. Plans call for contract placement(s) by June 30, 1989.

The second program, called "advanced electric technology," focuses on the mid-term objective of identifying and fielding, within 5 years, an advanced solar electric system that can be competitive in a market by the mid 1990s. A critical feature of this mid-term program is the inclusion of private sector involvement in the planning, funding, and implementation of the project. Since the private sector involvement will be significant (at least 50%), the involved private parties must retain the necessary resources to assume long-term risks associated with the completion of the system experiment and to continue, after governmental support has ended, with a successful marketing/manufacturing effort.

DOE COOPERATIVE R&D PROGRAM

BY

JOHN V. OTTS

SANDIA NATIONAL LABORATORIES

PROGRAM OBJECTIVES

A two-part program implemented through Sandia and SERI designed to accelerate field applications/commercialization of solar thermal systems.

- Mission 1: Improve existing solar thermal systems to achieve cost competitiveness in early 1990's.
- Mission 3: Identify and field a cost competitive advanced solar electric system by mid 1990's.

NEXT-GENERATION USER SYSTEMS

SELECTION CRITERIA

CANDIDATES -	CURRENTLY AVAILABLE COMMERICAL SOLAR THERMAL ELECTRIC SYSTEMS WITH THE POTENTIAL OF SIGNIFICANTLY LOWERING ELECTRICITY COSTS
REQUIREMENTS -	COST COMPETITIVE BY EARLY 1990'S 50% COST SHARE

NEXT-GENERATION USER SYSTEMS

MILESTONES

CBD/EXPRESSIONS OF INTEREST	**DEC 88**
RFQ - DISTRIBUTED	**FEB 89**
QUALIFIED BIDDERS BRIEFING	**MAR 89**
RFQ RESPONSES DUE	**MAR 89**
SELECTION	**APR 89**
CONTRACT	**JUN 89**

MISSION 3: ADVANCED ELECTRIC TECHNOLOGY

Objective: **In cooperation with industry, select and apply a single preferred advanced electric technology to achieve competitive cost of electrical energy in the mid 1990's.**

Approach:

1) **Survey industry for candidate market/technologies.**
2) **Based on system analysis, identify preferred approach.**
3) **As part of industry/government cooperative venture consortia, share development risk and field a system experiment by 1993.**

MISSION THREE MILESTONES

CBD Request for Information	Spring 1989
Issue RFQ	Spring 1990
Evaluate responses	Summer 1990
Selection/contract	Fall 1990
System Experiment	Winter 1993

NEXT-GENERATION USER SYSTEMS*

by

Albert A. Heckes
and
John V. Otts
Sandia National Laboratories
Albuquerque, NM 87185

ABSTRACT

To be competitive in future niche USA markets, solar thermal electric power generating systems must achieve significant reductions in the cost of electricity that they produce, because state and federal tax credits and favorable long term utility power purchase agreements are gradually being phased out. Therefore, the objective of the new "Next-generation User Systems" program is to select currently available commercial systems with the potential of significantly lowering the cost of electricity produced and to improve them by conducting research and development (R&D), testing, and evaluation so they will be economically competitive in the mid-1990s.

To achieve this goal, Sandia National Laboratories, as task leader, in cooperation with the Solar Energy Research Institute, is in the process of selecting one or more industrial partners to participate in a cost shared R&D program where the partners share at least 50 percent of the total costs. All efforts, including operation of the modified system and demonstration of its economic performance potential are to be completed by the end of FY 1992.

A Request for Proposals has been issued to those companies responding with expressions of interest to a public notice published in the Commerce Business Daily. We are currently waiting for the proposals to be completed. Upon their receipt they will be technically evaluated and scored to establish a competitive range. Contractual procedures will be established with those most qualified. Plans call for contract placement(s) by June 30, 1989.

---

*This work is supported by the Department of Energy under contract DE-AC04-76DP00789.

NEXT-GENERATION USER SYSTEMS

A. A. HECKES

and

J. V. OTTS

SANDIA NATIONAL LABORATORIES

MARCH 1989

NEXT-GENERATION USER SYSTEMS

SELECTION CRITERIA

CANDIDATES -	CURRENTLY AVAILABLE COMMERICAL SOLAR THERMAL ELECTRIC SYSTEMS WITH THE POTENTIAL OF SIGNIFICANTLY LOWERING ELECTRICITY COSTS
REQUIREMENTS -	COST COMPETITIVE BY MID-1990'S 50% COST SHARE

NEXT-GENERATION USER SYSTEMS

EXPRESSION OF INTEREST

15 RESPONSES

- ADVANCED ENERGY CO-GEN. SYSTEMS
- APPLIED RESEARCH ASSOCIATES, INC.
- BECHTEL NATIONAL, INC.
- CUMMINS ENGINE CO.
- ENGINEERING & ECONOMICS RESEARCH, INC.
- GEORGIA POWER CO.
- INDUSTRIAL SOLAR TECHNOLOGY
- LUZ INTERNATIONAL LIMITED
- MECHANICAL TECHNOLOGY INC.
- POLAR PRODUCTS
- POWER KINETICS, INC.
- SCIENCE APPLICATIONS INTERNATIONAL CORP.
- SOLAR KINETICS, INC.
- SPD TECHNOLOGIES
- STIRLING THERMAL MOTORS

NEXT-GENERATION USER SYSTEMS

MILESTONES

CBD/EXPRESSIONS OF INTEREST	**DEC 88**
RFQ	**FEB 89**
QUALIFIED BIDDERS BRIEFING	**MAR 89**
SELECTION	**APR 89**
CONTRACT	**JUN 89**

A REVIEW OF THE DEPARTMENT OF ENERGY'S ADVANCED ELECTRIC TECHNOLOGY COOPERATIVE PROGRAM*

David F. Menicucci, Jane M. Diggs
Sandia National Laboratories
Albuquerque, New Mexico

and

Walter Short
Solar Energy Research Institute
Golden, Colorado

ABSTRACT

The United States faces significant challenges in managing its energy supply and use. The most significant issues involve energy security and supplies, energy costs, and environmental quality. Many experts agree that the growing problems with air and water pollution, acid rain, and the greenhouse effect are directly linked to the burning of fossil fuels and, ultimately, will necessitate the use of renewable energy resources.

Solar thermal technologies provide a clean, abundant, and secure alternative to the use of fossil fuels. Research and development (R&D) over the past 15 years have produced complete solar thermal electric systems, and many of these smaller systems have begun to displace fossil fuel generators in selected markets. Although technological advances in larger solar electric generators have substantially improved production capability and cost effectiveness, they are not yet competitive with fossil-fuel or nuclear plants in large-scale utility markets. These fossil-fuel plants have evolved to their present state of reliability and cost-effectiveness based on many years of field experience.

An assessment of the development status of various solar thermal technologies leads to the conclusion that, like fossil-fuel plants, improvements in cost effectiveness can best be achieved by fielding systems, monitoring their performance, and integrating these field experiences into improved designs. The Department of Energy's strategy for fielding these systems is centered on the development of improved cost effectiveness and reliability of solar components and the development of markets with high strategic or economic value to U.S. industry. This balanced, two-part approach of R&D coupled with market development will introduce essential technological improvements while allowing the solar products industry to acquire the production experience base needed to further lower the cost of installing a system and of producing energy.

---

* This work was performed at Sandia National Laboratories, which is operated for the U.S. Department of Energy under contract number DE-AC04-76DP000789.

As a result, a new effort has been initiated by the DOE Solar Thermal Program, which is being implemented through Sandia National Laboratories and the Solar Energy Research Institute. The primary goal of the effort is to accelerate field application of improved solar electric systems. This new initiative consists of two major programs. The first focuses on significantly reducing the cost of electrical energy production in present commercially available solar energy systems. The goals of this first program are short term and are aimed at enhancing the ability of current solar electric systems to become more competitive in the marketplace. A demonstration project is planned for implementation in a commercial environment by fiscal year 1990 (FY90).

The second program, which is the subject of this presentation, focuses on the mid-term objective of identifying and fielding, within 5 years, an advanced solar electric system that can be competitive in a market by the mid 1990s. A critical feature of this mid-term program is the inclusion of private sector involvement in the planning, funding, and implementation of the project. Since the private sector involvement will be significant (at least 50%), the involved private parties must retain the necessary resources to assume long-term risks associated with the completion of the system experiment and to continue, after governmental support has ended, with a successful marketing/manufacturing effort.

This presentation describes the second program in detail. The project plan and a timetable is given. A request for information, which is to be published in the Commerce Business Daily, is also reviewed. Some of the latest developments on the project will also be discussed, and the tools to be used in comparing the economic potential of the various proposed technologies will be examined.

A REVIEW OF THE DEPARTMENT OF ENERGY ADVANCED ELECTRIC TECHNOLOGY COOPERATIVE PROGRAM

David Menicucci, Jane Diggs
Sandia National Laboratories

and

Walter Short
Solar Energy Research Institute

THE UNITED STATES ENERGY FUTURE

Problem:

The need for improved environmental quality will necessitate the application of cost-effective, clean energy production.

Potential solution:

Solar thermal technologies provide a clean, abundant, and secure alternative to fossil fuel generators.

THE STATE OF SOLAR THERMAL ELECTRIC TECHNOLOGIES

- Smaller solar thermal systems have begun to displace fossil generators in some markets (e.g., LUZ, IST).
- Some more research and development is needed to allow larger solar thermal systems to compete with larger fossil and nuclear generating plants.
- Solar systems must be fielded to achieve the reliability and cost effectiveness of incumbent technologies.

THE U.S. GOVERNMENT RESPONSE

Institute a major initiative to promote the development of improved cost effectiveness and reliability of solar components/systems for application in markets with significant strategic and/or economic value.

THE DOE INITIATIVE

A two-part program implemented through Sandia and SERI designed to accelerate field applications/commercialization of solar thermal systems.

- Mission 1: Improve existing solar thermal systems to achieve cost competitiveness in early 1990's.
- Mission 3: Identify and field a cost competitive advanced solar electric system by mid 1990's.

MISSION 3: ADVANCED ELECTRIC TECHNOLOGY

Objective: In cooperation with industry, select and apply a single preferred advanced electric technology to achieve competitive cost of electrical energy in the mid 1990's.

Approach:

1) Survey industry for candidate market/technologies.

2) Based on system analysis, identify preferred approach.

3) As part of industry/government cooperative venture consortia, share developmental risk and field a system experiment by 1993.

ISSUES

- Scope relative to that of Mission 1
- Identification of a viable market/technology combination
- Enhancement of awareness of potential participants
- Implications of dish/PV systems
- Use Solar thermal DAC to provide bridge Missions 1

MAJOR ACTIVITIES TO DATE

- Complete Mission 3 program planning
- Draft Request for Information, finalize approvals
- SNL/SERI/EPRI/Georgia Power planning meeting for dish Stirling workshop
- Initiated/continued various technology exchange activities with industry

MISSION THREE MILESTONES

CBD Request for Information	Spring 1989
Issue RFQ	Spring 1990
Evaluate responses	Summer 1990
Selection/contract	Fall 1990
System Experiment	Winter 1993

CUMMINS FREE PISTON STIRLING ENGINE

Cummins Engine Co.

J. Davis

SUMMARY - CENTRAL RECEIVER UTILITY STUDY ACTIVITIES

T. Hillesland, Jr.
Pacific Gas and Electric Company
San Ramon, California

ABSTRACT

Two utility teams, Pacific Gas and Electric (PG&E) with its principal subcontractor Bechtel National, Inc. and Arizona Public Service (APS) with its principal subcontractor Black and Veatch Engineers-Constructors, began a cooperative study to determine a path to commercialization for solar central receiver power plants. The study was cofunded by the U.S. Department of Energy, The Electric Power Research Institute, and the utilities themselves.

The study was divided into two phases. In Phase I, the two teams examined various plant designs and two receiver coolants to select the preferred commercial plant configuration. In Phase II, the two teams merged and began developing a conceptual design and financial plan for a system experiment to precede the first commercial plant.

In Phase I, the two teams, through trade studies and conceptual design comparisons, reached a consensus regarding the preferred configuration of commercial central receiver plants. Two plant concepts were investigated. The first was a 100 MWe plant: this near-term design, the first commercial plant, could be in operation by 1996 with moderate extrapolations in current equipment designs. The second concept was a 200 MWe commercial plant, assumed to be between the fifth and tenth plant built, which would benefit from economies of scale and design improvements. This design could be in operation by 2010.

Trade studies to determine the optimum plant size and capacity factors, based on projections for PG&E marginal costs in the year 2000, identified plant sizes between 100 to 200 MWe at a capacity factor of 38 percent. This capacity factor was achieved using a solar multiple of 1.8 with six hours of thermal storage capacity at full rated output.

The important features of the 100 MWe, near-tern plant are:

- Molten nitrate salt receiver and storage fluid
- External cylindrical receiver configuration
- 150 square meter stressed membrane heliostats
- Surround heliostat field layout

In Phase II, the merged utility study team performed a comprehensive risk analysis of the first 100 MWe plant followed by a cost/benefit analysis of possible risk mitigation measures. A commercial development plan was then defined from the results of this analysis. The centerpiece of the plan is the conversion of the Solar One Pilot Plant at Barstow, California, to nitrate salt technology. Work is continuing to determine the cost of the conversion and to examine possible financing plans.

COMMERCIAL PLANT DESIGN POINT EFFICIENCIES – EQUINOX NOON

Item	200 MWe Plant (5–10th)	100 MWe Plant (1st)
Collector	0.643	0.661
Receiver	0.864	0.846
Piping	0.999	0.999
Thermal storage	0.999	0.999
Turbine (gross)	0.424	0.424
Plant parasitic power	0.870	0.892
Solar to electric	0.205	0.211

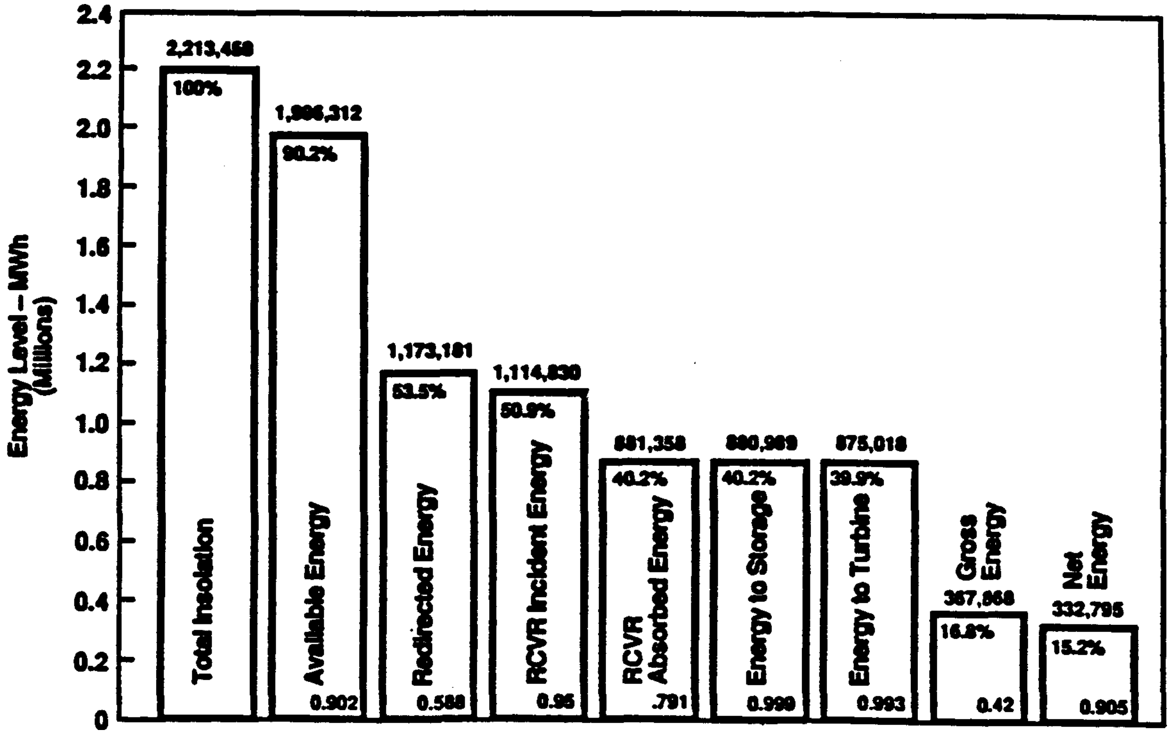

Annual Energy and Efficiency Levels in 100 MWe Commercial Plant with Wet Cooling

COST AND PERFORMANCE OF 100 MWe AND 200 MWe PLANTS USING WET COOLING

Cost Category	200 MWe (5-10th)	100 MWe (1st)
Capital cost, $M(a)	449	295
Annual O&M, cost $M(a)	5.6	4.5
Annual net output, GWhe	703	349
Annual capacity factor, %	40.1	39.9
Levelized energy cost, $/kWhe(b)	0.075	0.102

(a) First quarter 1987 $
(b) Constant year 1987 $

PG&E COMMERCIAL PLANT STATISTICS

Item	200 MWe (5-10th)	100 MWe (1st)
Land area, km^2	10.0	3.37
Max. field radius, m	1,782	1,314
Collector area, m^2	1,818,606	882,690
Number of heliostats	12,235	5,939
Receiver:		
Thermal rating, MWt	936	468
Height, m	28.4	21.1
Diameter, m	22.7	19.2
Aspect ratio	1.25	1.10
Tower height, m	239	180
Thermal storage capacity, MWht (6 hrs)	3,120	1,560
Salt storage tank sizes		
Hot (H x D), m	13.0 x 28.7(a)	13.0 x 28.7
Cold (H x D), m	12.2 x 40.5	12.2 x 28.7
Steam generator thermal rating, MWt 520	260	
Turbine gross rating, MWe	220	110
Water storage tank size:		
Depth, m	9.5	8.5
Volume, m^3	257,000	129,000

(a) Two required

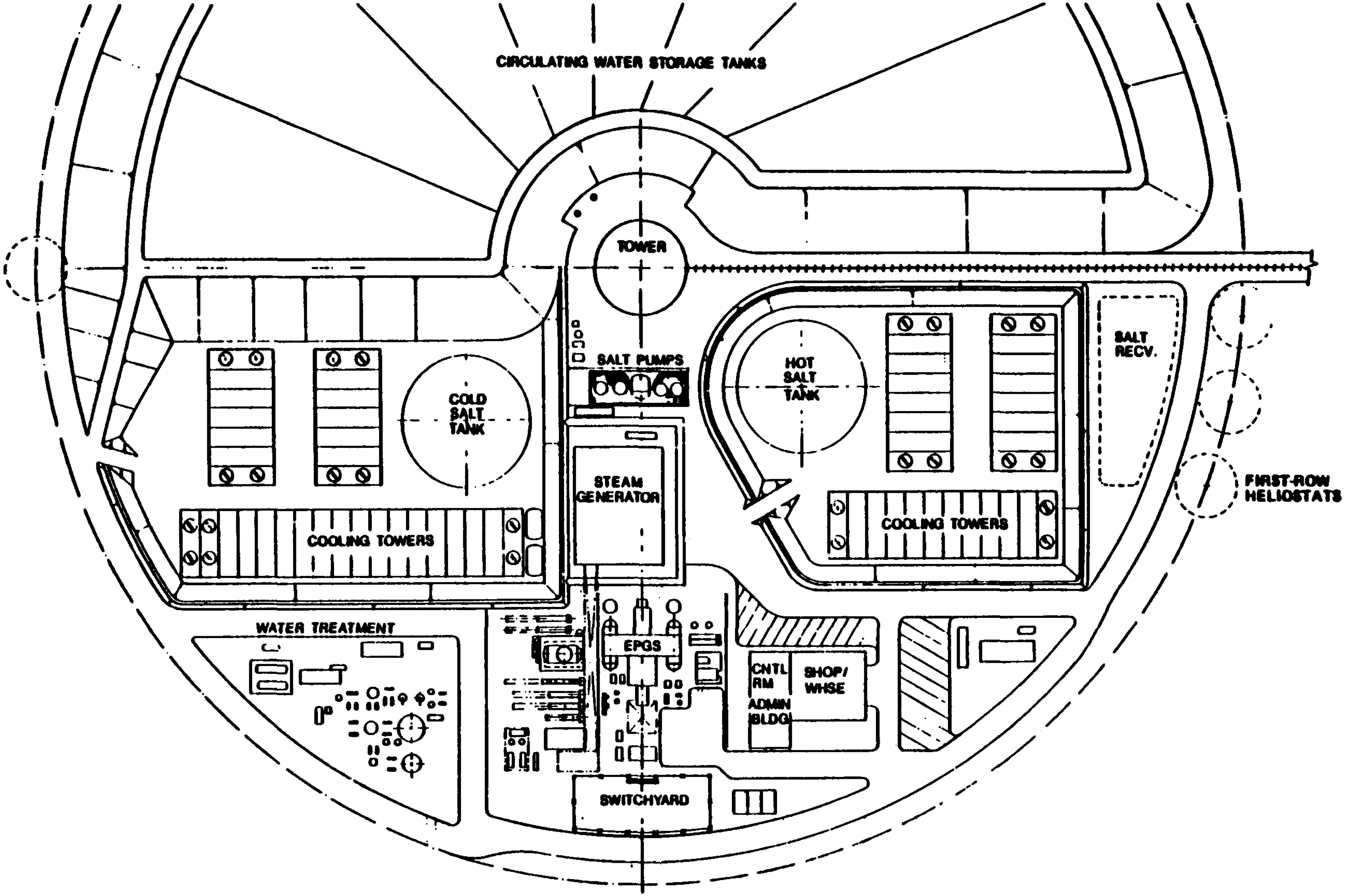

100 MWe Plant Yard Layout–Tower Area

100 MWe COMMERCIAL PLANT SALT RECEIVER DESIGN AND PERFORMANCE PARAMETERS

Item	Parameter
Rated power, MWt	468
Salt inlet/outlet temperature, °C (°F)	288/566 (550/1,050)
Design point	Noon, equinox
Salt flow rate, kg/s (lb/hr)	1,108 (8.79×10^6)
Optical tower height, m (ft)	185 (607)
Receiver overall diameter x height, m (ft)	19.7 x 30.7 (64.5 x 100.8)
Absorber diameter x height, m (ft)	19.2 x 21.1 (63 x 69.3)
Total receiver dry weight, 10^3 kg (10^3 lb)	849 (1,871)
Total operating weight, 10^3 kg (10^3 lb)	1,073 (2,366)
Absorber surface area, m^2 (ft^2)	1,274 (13,712)
Number of circuits	2
Number of passes per circuit	10
Tube O.D. x wall thickness, mm (in.)	38.1 x 1.65 (1.5 x 0.065)
Number of tubes, per pass/total	78/1,560
Salt inlet velocity, m/s (ft/s)	3.9 (12.9)
Design point friction pressure drop, kPa (psi)	3,000 (435)
Peak incident/absorbed flux, MW/m^2	0.8/0.71
Average absorbed flux, MW/m^2	0.367
Design Point Receiver Performance:	
Incident power, MWt	552.9
Reflected loss, MWt	44.2
Radiation loss, MWt	30.1
Convection loss, MWt	10.0
Conduction loss, MWt	0.6
Net receiver output, MWt	468.0
Receiver efficiency	0.846

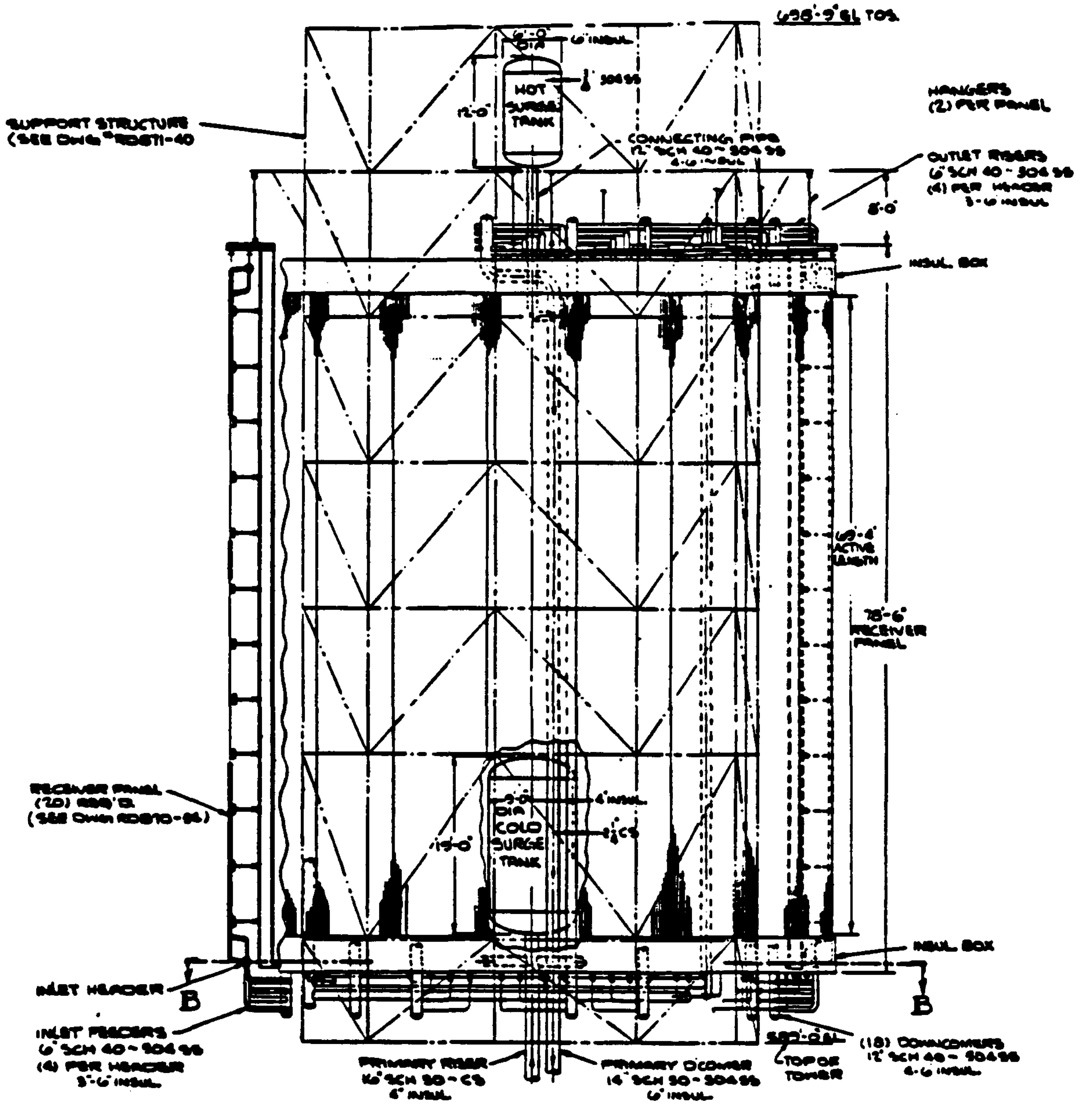

468 MWt Salt Receiver General Arrangement Drawing: Elevation View

SOLAR ELECTRIC TECHNOLOGY: AN OVERVIEW*

Paul C. Klimas
Sandia National Laboratories
Albuquerque, New Mexico

ABSTRACT

Solar Thermal Electric Technology (STET) has made significant progress over the past 15 years. Central receiver technology has been successfully demonstrated in the 3-year power production phase of Solar One plant operation. Availability over that 3-year period came within 10% of the established goal. The world's record for solar-to-electric conversion efficiency is currently held by a parabolic dish-Stirling engine system. Several hundred megawatts of generating capacity from systems based on United States Department of Energy (DOE) developed parabolic trough technology exists today in California. The near-term evolution of these technologies holds great promise for widespread applications of solar electric systems.

The DOE STET Program has been narrowing the focus of its efforts. While still examining selected higher risk, longer term technologies, resource limitations have required the program to concentrate its systems integration and hardware development in those areas where near-term commercialization appears most likely. The program is also attempting to leverage its resources through finely structured cooperative efforts with industry and a wide range of less formal design assistance activities. The intent is to conduct a program which allows the significant and unique capabilities of the national laboratories to be applied to basic STET research and development, but also to remain sufficiently flexible to respond in a timely manner to changes in technological direction suggested by industry and the marketplace.

Systems based on distributed receiver technology are believed ready for commercialization. Inherently simple reflux receivers using isothermal heat transfer to provide power to higher reliability kinematic Stirling engines form the basis for this optimism. Both wicked and pool boiling sodium heat pipes appear to be technically and economically feasible. Free piston Stirling engines offer further increases in engine reliability and reductions in capital costs relative to the kinematic engines currently being evaluated.

Central receiver technology developmental efforts, because of high total system capital costs, tend to be aimed at components and subsystems. SNL/SERI are enthusiastic about the direct absorption receiver concept.

---

* This work was performed at Sandia National Laboratories, which is operated for the U.S. Department of Energy under contract number DE-AC04-76DP000789.

Its lower capital costs, higher operating temperatures, reduced parasitic losses and increased reliability suggest significant reductions in levelized costs of energy. Testing of large-scale molten salt pumps and valves is under way at SNL in support of these systems. Large receivers using air as the working fluid are also under investigation.

By focusing its hardware development activities, entering into formal cooperative ventures with industry, providing flexible, quick-response design assistance, and joining in selected international agreements, we believe that DOE can significantly accelerate marketplace penetration of U.S. solar electric technology.

OVERVIEW OF SOLAR CONCENTRATOR DEVELOPMENT

John T. Holmes
SANDIA NATIONAL LABORATORIES
Division 6216, Box 5800
Albuquerque, NM 87185

ABSTRACT

The history of the development of solar energy dates as far back as Mesopotamia when, for example, polished golden vessels were reportedly used as concentrating mirrors by temple priestesses to ignite altar fires. Widespread interest in using solar power for practical applications did not occur until the energy "crisis" of the 1970s. Concentrating collectors are required to generate the elevated temperatures that can be used to efficiently power industrial and electric conversion processes. This session will review the national program to develop sun-tracking mirrors, either heliostats or parabolic dishes, a program that promises cost-effective solutions for industrial applications of solar energy.

Heliostats - The U.S. Department of Energy (DOE) funded the first fabrication of a large number of heliostats for central receiver (power tower) applications in 1976-77. These were designed and built by the Martin Marietta Company for the 5-MWt Central Receiver Test Facility (CRTF) in Albuquerque, New Mexico. The 222 heliostats at the CRTF each have 37.2 m^2 of silvered glass mirrors. Martin Marietta also built the 1818, 39.3-m^2 glass mirror heliostats, for the 10-MWe Solar I pilot plant near Barstow, California in 1981. This was again funded in part by the U.S. DOE. A smaller, commercially-funded (ARCO Solar) plant built in 1982 with 30, 52.8-m^2 heliostats provided steam for an enhanced oil recovery operation near Taft, California. The U.S. DOE then developed four second-generation glass mirror designs that promised lower costs and improved performance. Today's program is considering using very large area (to 200 m^2) glass mirror designs, the innovative stretched-membrane concept using silvered polymer film reflectors, and low-cost sun-tracking drive mechanisms. These innovations promise a cost reduction of over ten times the cost of the original CRTF heliostats.

Parabolic Dishes - The national program to develop efficient distributed solar power systems resulted in the construction of the Solar Total Energy Project in 1982 at Shenandoah, Georgia. That facility uses 114, 38.5-m^2 parabolic dishes built by Solar Kinetics, Inc., to heat an organic fluid that provides process heat and electricity for the adjacent textile mill. In 1985 the La Jet Company started up Solar Plant 1 near Warner Springs, California. The solar plant generates steam for a central turbine generator. It has 700, 42.7-m^2 dishes that use a polymer film reflector for its innovative circular, stretched-membrane mirrors. More recently, DOE's dish development program has been directed at applications in which the receiver at the focus of each dish includes a close-coupled engine-generator. A dish-Stirling engine system built by Advanco produced the standing world record solar-to-electric conversion efficiency of 29.4 percent in 1984. Soon thereafter, the McDonnel Douglas Company marketed a dish-Stirling system that routinely produced conversion efficiencies in the 25 to 28 percent range. Dish costs and engine

reliability have slowed wide adoption of these systems. Our current program is centered on developing large-scale (to 150 m^2) stretched-membrane dish structures that promise low costs and high performance.

Design and Materials - As we try to achieve the economies that come with large-size collectors, accurate and reliable design guides must be available that allow us to optimize our heliostat and dish structures. Ongoing wind tunnel tests with scale models have been useful in providing the needed design criteria. Low-cost, flexible reflectors are required to take advantage of the innovative stretched-membrane heliostat and dish designs. Silvered thin polymer films have been improved and now promise multi-year service lives in severe environmental conditions.

ABSTRACT

PHOTOCHEMICAL SYSTEMS AND EMERGING APPLICATIONS OVERVIEW

B. P. Gupta

Research on solar thermal energy systems over the last 15 years has focused on the ability of concentrated solar flux to generate high temperatures - high enough for process heat systems and electricity generation. Photons available in the spectral distribution of concentrated sunlight make special chemical reactions possible. Combined with the high temperatures and high heating rates, these reactions lead to the development of Photochemical Systems for destroying hazardous chemical wastes by either photocatalytic and photolytic destruction processes.

Research in using the special characteristics of concentrated solar energy began about 6 years ago within the Solar Thermal Program under SERI leadership. These research efforts conducted mainly at the universities investigated the possibility of conducting photolytic or photocatalytic destruction of hazardous chemicals such as dioxins, and chlorinated hydrocarbons. For dioxins, early laboratory tests established the feasibility of photolytic destruction of these chemicals. The most recent tests in concentrated solar flux has confirmed these laboratory experiments at higher solar concentration of upto 1000 suns and have achieved destruction levels of six-9s (99.9999%). These tests examined the effects of variables such as destruction temperature, solar intensity, residence time, gaseous composition, and ultraviolet portion of the solar spectrum.

For chlorinated hydrocarbons in water solutions, feasibility of photocatalytic destruction has been established in the past for exposure in natural sunlight. Recent laboratory experiments have confirmed the expected acceleration in decomposition rate with increasing solar concentration. Engineering scale data on photocatalytic destruction of chemicals in water is being obtained at Sandia to fully evaluate the economic potential and to arrive at an appropriate development path for deployment of photochemical systems in the 1990s.

The engineering scale experiments are being supported by continuing research in the laboratory to understand the effect of the variables on the destruction path of specific chemicals and mixtures. Typical variables are the solar concentration level, specific contribution of the thermal energy and the UV radiation present in concentrated solar flux, catalyst type and loading, residence time, and composition of gases or liquid mixtures. These research data will enhance the broader applicability of solar driven photochemical processes.

Emerging applications of concentrated solar energy include materials transformation, photo-enhanced chemical synthesis, and solar pumped lasers with very high concentration. Laboratory experiments at Universities and SERI are underway to evaluate the possibility of reducing the use of strategic materials by transforming the structure of low cost metals and achieve desirable properties, to examine ways of achieving very high concentration with innovative optical techniques, and to understand the role of photo-enhancement in catalytic chemical synthesis processes.

THE REFLUX HEAT-PIPE SOLAR RECEIVER DEVELOPMENT PROGRAM

Richard B. Diver

Sandia National Laboratories
Albuquerque, NM 87185

ABSTRACT

Stirling dish-electric systems have been identified as having potential for meeting the Department of Energy (DOE) long-term levelized energy cost goals. Dish-electric systems based on Stirling engine technology were successfully demonstrated by Advanco Corp. and McDonnell Douglas Corp. and showed the potential for high efficiency.

A shortcoming of the Advanco and McDonnell Douglas modules (both used United Stirling Engines) was the directly illuminated tube receiver. Because of the inherent nonuniformities of concentrated sunlight, the directly illuminated Stirling engine heater tubes experience temperature gradients that degrade performance and limit life. In addition, directly heated tube receivers require highly accurate concentrators to produce reasonably uniform incident solar flux distributions, and generally result in performance compromises in the engine and receiver designs. Another shortcoming of the Stirling tube receiver is that it cannot be readily hybridized with fossil fuels.

The reflux heat-pipe receiver represents the next step in the evolution of Stirling receiver technology and has the potential to address all of the tube receiver shortcomings outlined above. In the reflux heat-pipe solar receiver sodium and/or potassium is used as an intermediate heat transfer fluid between the heater tubes of a Stirling engine and a solar receiver/absorber. The liquid metal is evaporated from the backside of the solar absorber (the evaporator) and flows to the Stirling engine's heater where it condenses (condenser). The liquid is passively returned to and distributed over the evaporator by gravity (refluxing), capillary forces in a wick, or by a combination of the two effects.

The liquid metal intermediate heat transfer fluid permits, to a large extent, the independent optimization of the receiver and the Stirling engine's heater tubes. In addition, the high heat transfer and isothermal nature of evaporating and condensing metals is ideally suited to the thermodynamic requirements of Stirling engines and to the design of solar receivers. Isothermal operation has the important advantage of reducing thermal stresses and increasing life. Furthermore fossil-fuel-fired heat pipes can in principle be readily combined with a reflux heat-pipe solar receiver to utilize solar and fossil fuel in any proportion.

Heat pipe solar receivers using conventional cylindrical heat pipes have been proposed and partially developed in the past. The current approach uses spherical geometry evaporators to capture concentrated sunlight more effectively and to reduce receiver cost and complexity. The inherently simple pool boiler reflux receiver concept is also being considered.

The objective of the reflux heat-pipe receiver program is to develop the tools and expertise to design and build long-lived, reliable, cost-effective receivers. An essential part of this effort is the development of reflux heat-pipe receiver technology, including the tools to design and optimize these receivers. The program is intended to complement and support industry sponsored reflux heat-pipe receiver development, and the DOE/NASA free-piston Stirling Advanced Solar Conversion System (ASCS) program.

The reflux heat-pipe solar receiver program is being conducted in two phases. Three projects are currently under way in Phase 1: (1) Stirling Thermal Motors screen wick heat-pipe receiver, (2) Reflux Pool Boiler Receiver, and (3) Alternative Wick Heat-Pipe Receiver. Each project involves the testing of one or more full-scale receivers on a Test Bed Concentrator in Albuquerque, NM. Gas-gap calorimeters will be used to simulate an engine and to quantify receiver performance. Laboratory scale "bench tests" with quartz lamp arrays will also be used for proof-of-concept tests. In Phase II a "best" receiver design will be identified, hybridized, and constructed, and made available for long-term testing. This will become the baseline receiver design that will hopefully be used in Stirling dish-electric systems of the future.

DIRECTLY ILLUMINATED STIRLING TUBE RECEIVERS

- United Stirling - Advanco & McDonnell Douglas Modules set world solar-to-electric efficiency records and showed the promise of Stirling dish-electric systems

However:

- Directly Illuminated Tube Receivers....
  - Have limited life, approximately 16,000 hrs at 720°C
  - Require an accurate, high-quality dish
  - Compromise engine performance
  - Are not easily hybridized

THE REFLUX HEAT-PIPE SOLAR RECEIVER

- Adaptation of liquid metal heat-pipe technology to the unique requirements of solar energy
  - Evaporator is shaped to efficiently collect solar energy
  - Condenser is the heater tubes of a Stirling engine

- Liquid metal is passively recirculated to the solar absorber/evaporator
  - Gravity (refluxing)
  - Capillary forces in a wick

- Intermediate evaporating and condensing liquid metal
  - Leads to low ΔTs and isothermal behavior ideally suited to solar receivers and Stirling engines
  - High flux capability (as high as 8 MW/m^2)
  - Permits independent optimization of the receiver and engine
  - Leads to low thermal stresses and potentially long life
  - Readily hybridized

Photograph of the Advanco Dish-Stirling Module, which holds the current record for solar-to-electric conversion efficiency. The mirrored parabolic dish concentrates sunlight directly on the engine heater head tubes near the dish focus.

United Stirling ESOR-IIB heater head used on the Advanco Dish-Stirling Module. The oversized heater head tubes are spread out to improve the flux distribution and reduce thermal stress, but engine and receiver performance are compromised.

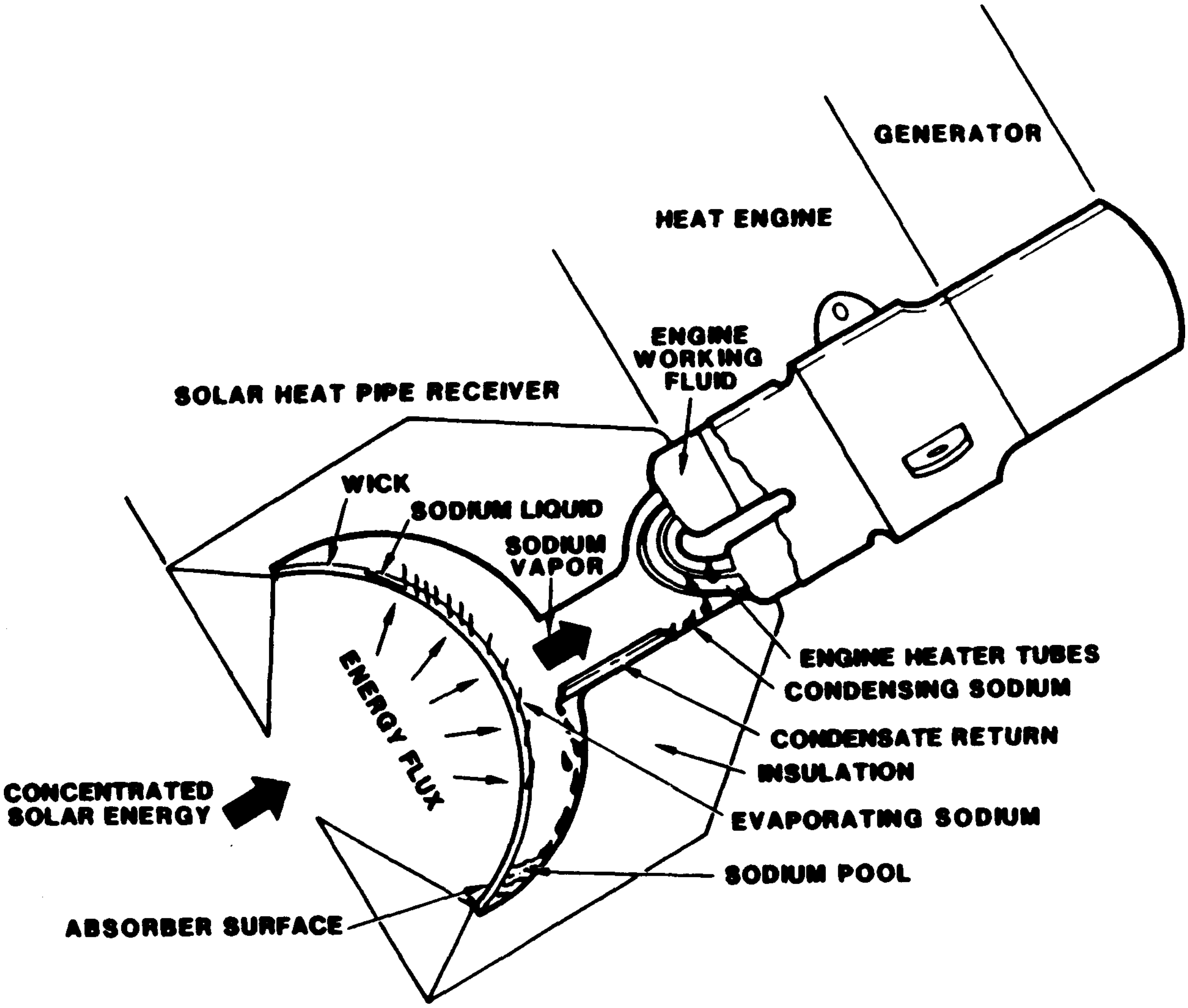

Conceptual drawing of a heat-pipe receiver and Stirling engine. The receiver's absorber surface absorbs concentrated solar flux causing sodium to evaporate from the wicks. The sodium vapor is transported to the Stirling engine's heater tubes, where it condenses and liberates heat to the engine. The liquid sodium is returned to the receiver absorber by gravity and distributed by capillary forces in the wick.

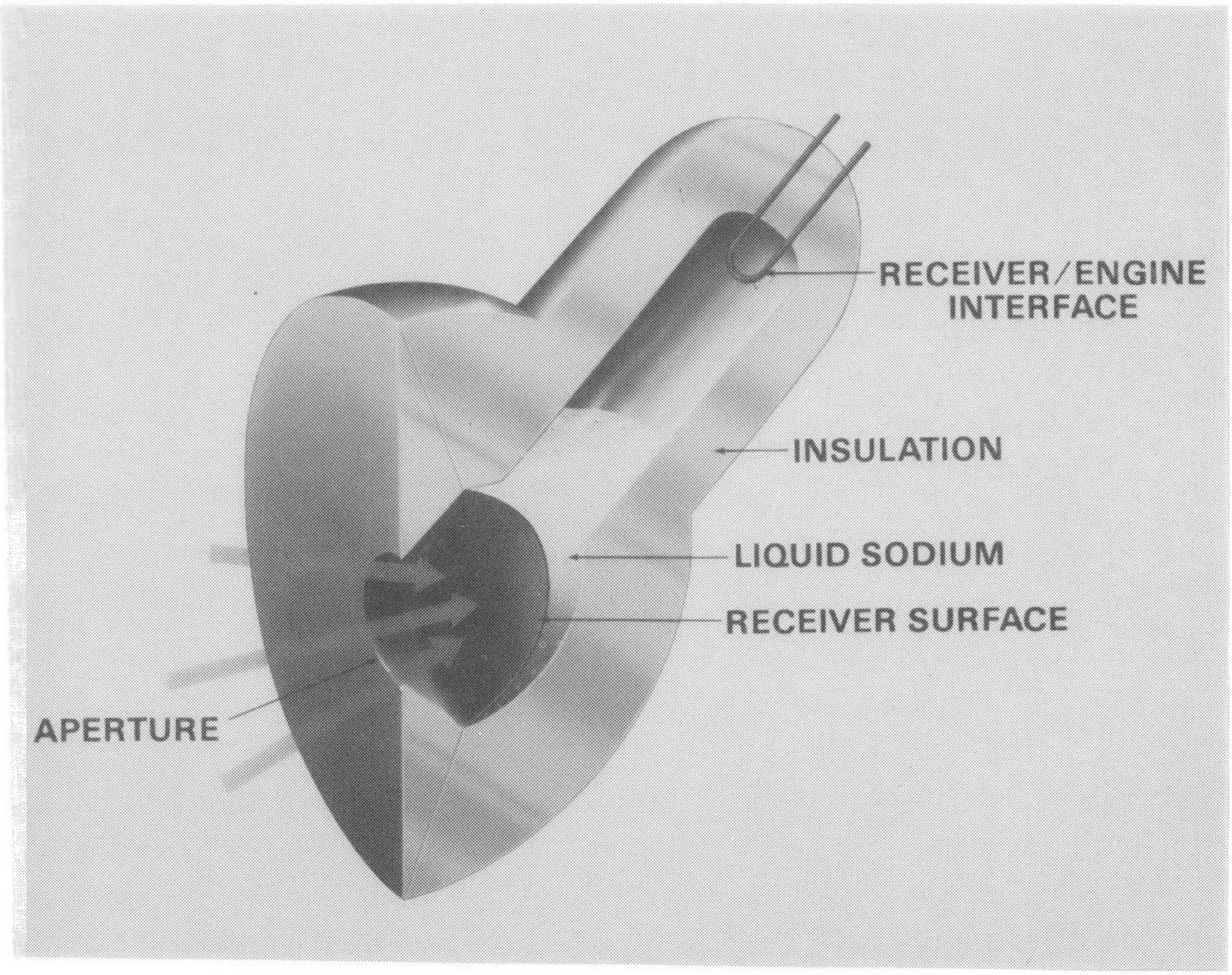

Artist's rendering of a reflux pool boiler receiver. Liquid metal is boiled from the backside of the receiver absorber and is transported as a vapor to the heater tubes of a Stirling engine. Liquid metal return to the absorber is assured by an inventory sufficient to submerge the absorber in orientations from vertical to horizontal. The engine heater tubes are always located in the vapor space above the pool.

THE OBJECTIVES OF THE REFLUX HEAT-PIPE RECEIVER PROGRAM IN FY88-89 ARE:

- To demonstrate reflux heat-pipe receiver technology by successful tests of at least one receiver on a Test Bed Concentrator.
- To identify the best receiver design approach--heat-pipe vs. reflux boiler, wire screens vs. sintered powder wicks.
- To develop the tools to design and optimize reflux heat-pipe receivers.
- To develop the technology to hybridize reflux heat-pipe receivers.

THE REFLUX HEAT-PIPE RECEIVER PROGRAM WILL EMPHASIZE HARDWARE TESTING

- Tests will be performed on the Test Bed Concentrators (TBC)
- The first phase of testing will establish hardware limitations (test to failure)
- The second phase of testing will determine performance characteristics

REFLUX HEAT-PIPE SOLAR RECEIVER PROGRAM ORGANIZATION

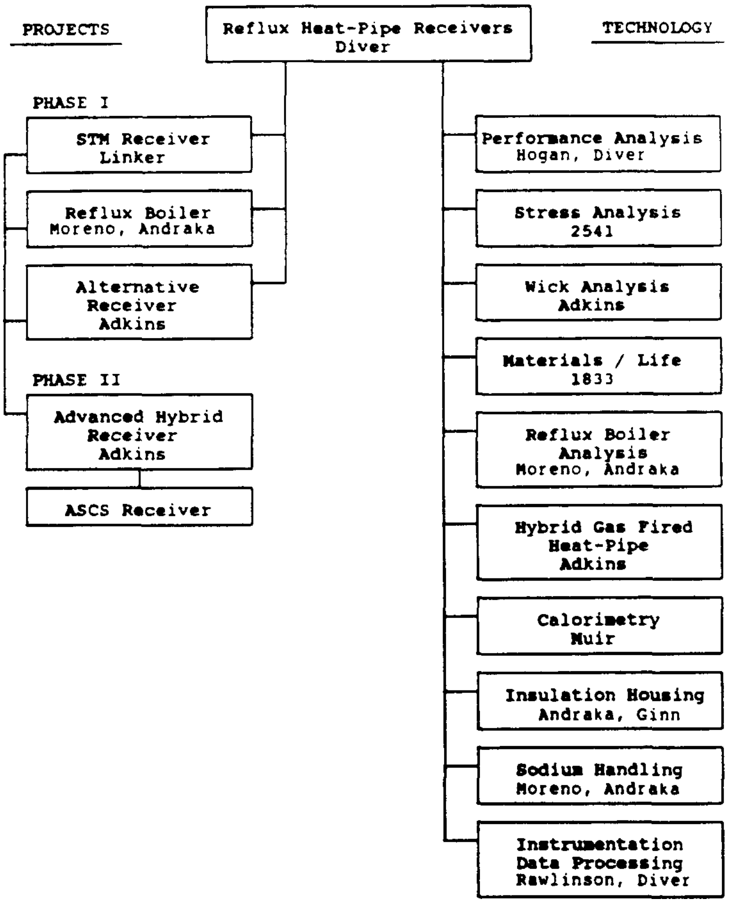

Reflux Heat-Pipe Receivers
Diver

PROJECTS

PHASE I

STM Receiver
Linker

Reflux Boiler
Moreno, Andraka

Alternative Receiver
Adkins

PHASE II

Advanced Hybrid Receiver
Adkins

ASCS Receiver

TECHNOLOGY

Performance Analysis
Hogan, Diver

Stress Analysis
2541

Wick Analysis
Adkins

Materials / Life
1833

Reflux Boiler Analysis
Moreno, Andraka

Hybrid Gas Fired Heat-Pipe
Adkins

Calorimetry
Muir

Insulation Housing
Andraka, Ginn

Sodium Handling
Moreno, Andraka

Instrumentation Data Processing
Rawlinson, Diver

Sandia Heat-Pipe/Pool Boiler Receiver

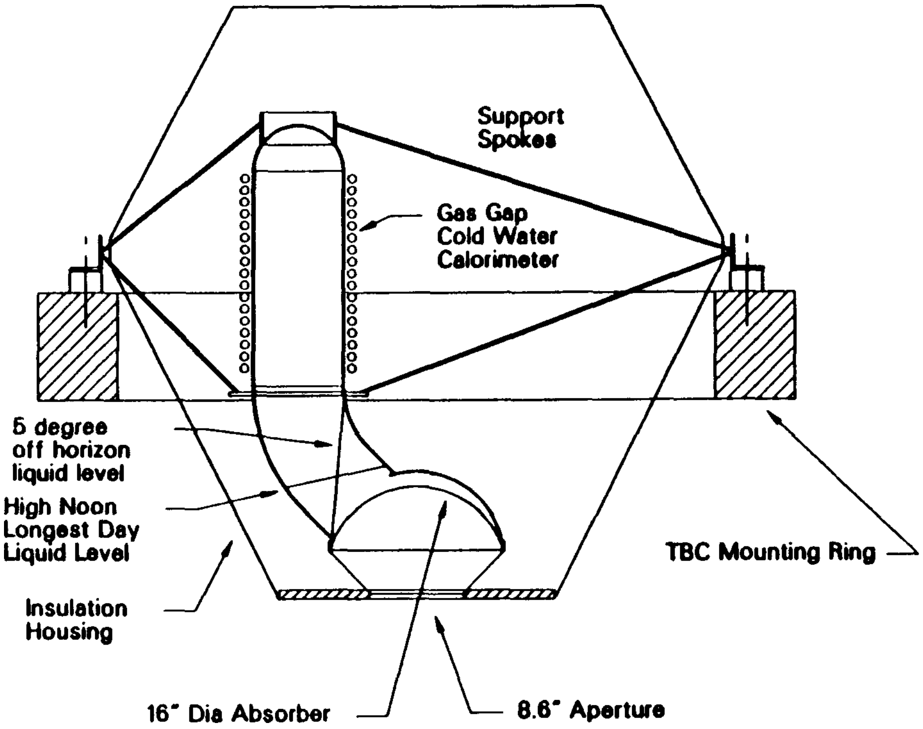

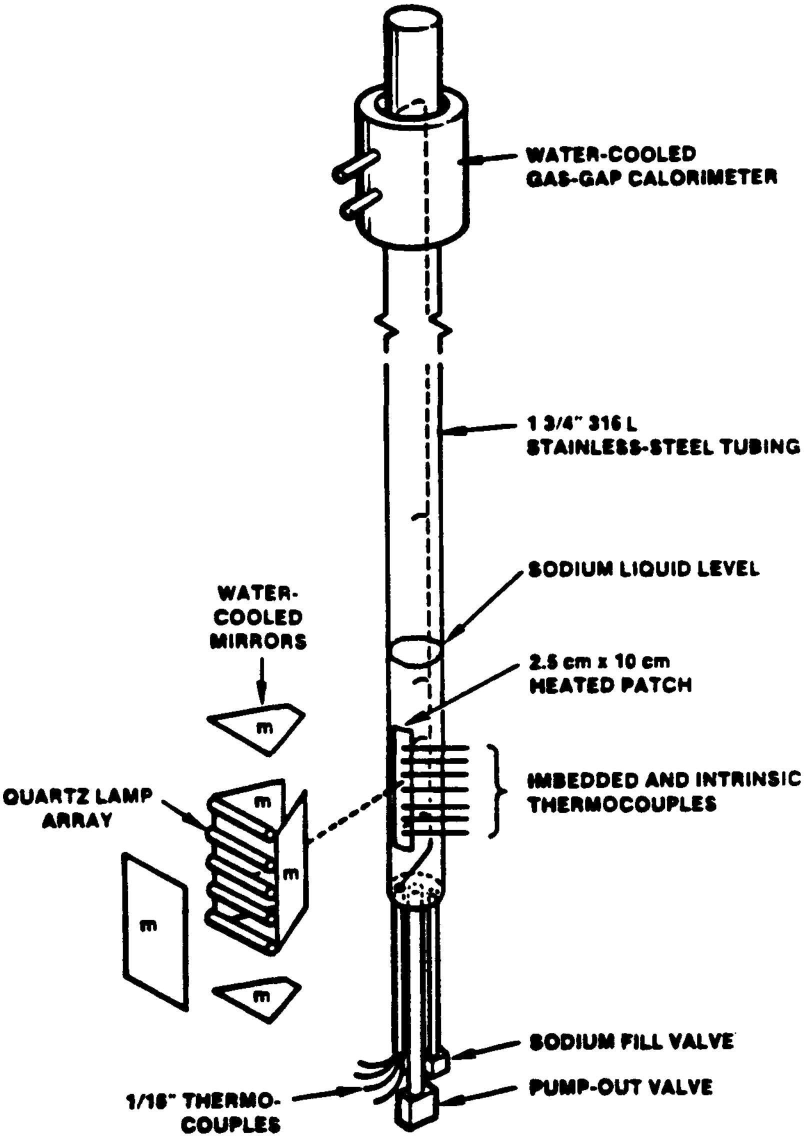

Pool Boiler Bench Test

SUMMARY

- The reflux heat-pipe solar receiver continues to show promise for meeting the program goals for performance, cost, and reliability.
- An integrated multidisciplinary program involving talented personnel from Sandia, NASA, and industry is in place and gaining momentum.
- Many key technical issues need to be addressed.
- The aggressive, hardware-oriented development program under way is expected to resolve or reduce the uncertainty of many of the technical issues in FY89.

AN OVERVIEW OF ADVANCED CENTRAL RECEIVER CONCEPTS*

James M. Chavez
Sandia National Laboratories
Albuquerque, New Mexico

ABSTRACT

Advanced central receiver concepts are currently being investigated as part of the U.S. Department of Energy solar thermal research program. In the last 12 years many studies and test programs have been carried out to develop and demonstrate the viability of central receiver power plants using molten nitrate salt and steam tube receivers. However, studies of advanced receiver concepts, such as the molten nitrate salt direct absorption receivers and volumetric receivers, have shown their potential to be simpler and cheaper than conventional tube-receivers. These two advanced central receiver concepts will be described in this presentation.

In a direct absorption receiver (DAR), the heat-absorbing fluid (a blackened molten nitrate salt) flows in a thin, wavy film down a flat, vertical panel (rather than through tubes) and absorbs the concentrated solar flux directly. Potential performance and economic advantages of the DAR include a significantly simplified design, improved thermal performance, increased reliability and operating life, and reduced capital and operating costs. A joint SNL/SERI three-year DAR research and development program to determine DAR feasibility is currently underway.

Research and development activities for the DAR have included laboratory-scale water and salt flow testing, large-scale water-flow testing, and design studies of a commercial-sized DAR. To better understand molten nitrate salt flow and to provide a test bed for DAR characterization with actual solar heating, we have designed and are building a 3-MW_t solar panel research experiment. The system will be capable of operating at flows, temperatures, and flux levels typical of a commercial-sized DAR. We expect to begin testing the panel research experiment in the fall of 1989.

---

*This work was supported by the U.S. Department of Energy under contract DE-AC04-76DP00789

Volumetric receivers are currently being investigated for use in a solar central receiver power plant. A volumetric receiver design is a unique type of solar central receiver that uses a porous absorber (heat exchanger), on which the solar energy is concentrated. Air flows through the absorber, convectively transferring energy from the absorber to the air. A volumetric air receiver can be relatively inexpensive and moderately efficient (80%, the major loss is radiative), and can produce high-temperature air (>550°C) at ambient pressure. The major advantages of the volumetric receiver are related to the inherent simplicity of using air as the working fluid. The volumetric receiver has applications for electricity production, industrial process heat, and chemical processing.

A volumetric receiver has been tested, in the central receiver configuration, by the International Energy Agency (IEA) at the Plataforma Solar de Almeria in Spain. Other types of volumetric receiver absorbers are to be tested on the volumetric receiver test bed at the Plataforma Solar this spring. Other work on volumetric receivers currently includes systems analysis, characterization testing of absorber materials, and modeling of volumetric receivers.

The status and results of current activities on both the DAR and volumetric receiver will be presented.

AN OVERVIEW OF ADVANCED CENTRAL RECEIVER CONCEPTS

PRESENTED AT SOLTECH '89
MARCH 7-9, 1989

J.M. CHAVEZ
SOLAR THERMAL ELECTRIC TECHNOLOGY
DIVISION 6217
SANDIA NATIONAL LABORATORIES
ALBUQUERQUE, NEW MEXICO

Molten Nitrate Salt
DIRECT ABSORPTION RECEIVER

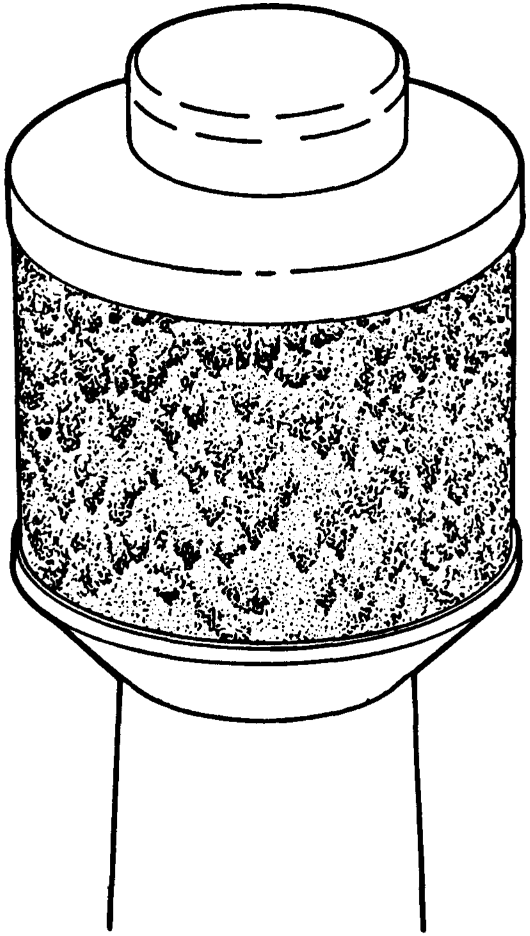

High Solar Flux Absorbed Directly in a Blackened Flowing Molten Salt Film

Advantages:

- High Efficiency
- Low Cost
- Simplicity & Reliability
- No Tube Life Considerations
- Simplified Control

Potential Problems:

- Flow Stability
- Panel Stresses & Deformation
- Wind
- Salt/Blackener Stability

External Molten Nitrate Salt
DIRECT ABSORPTION RECEIVER

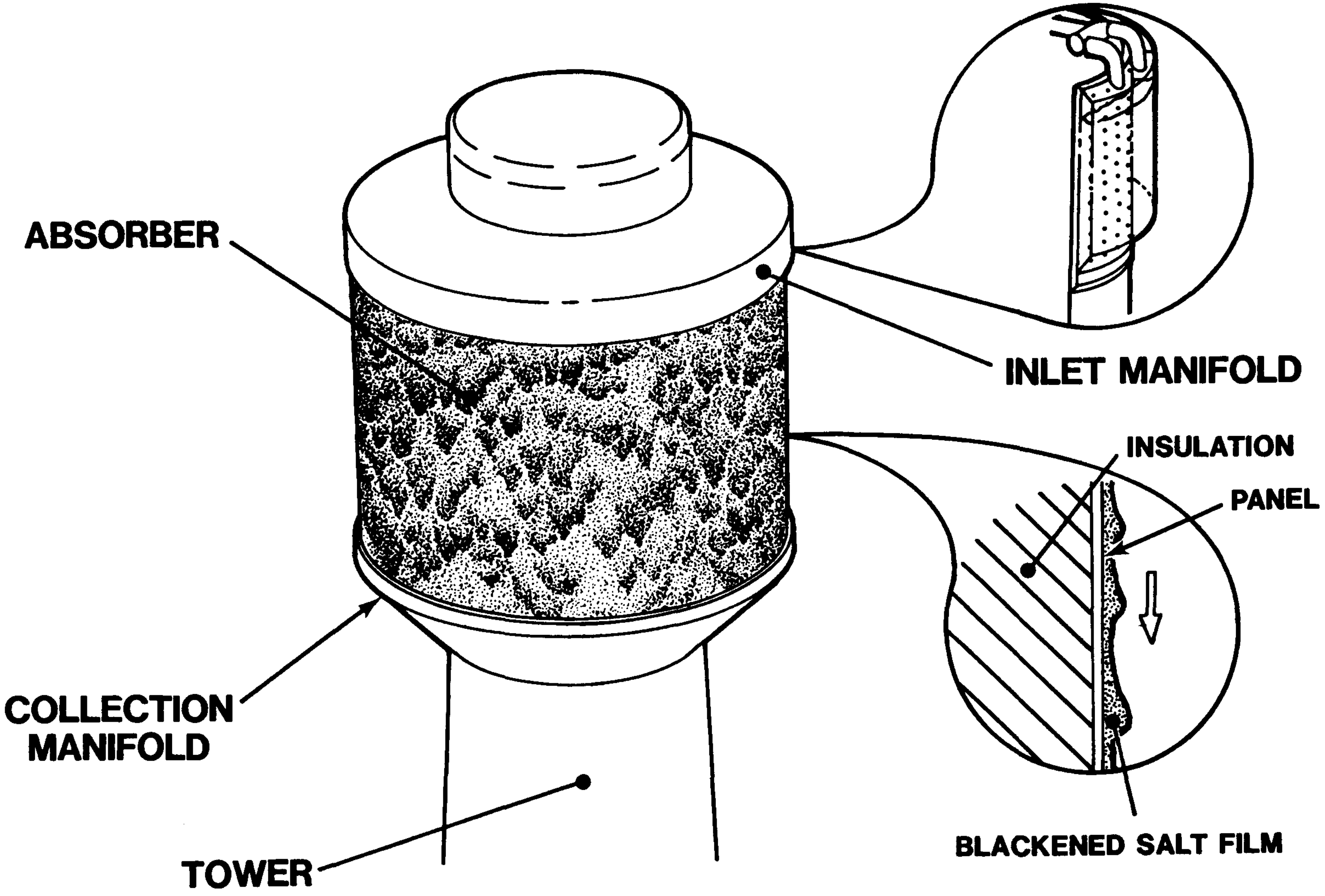

External Direct Absorption Receiver Vertical Section

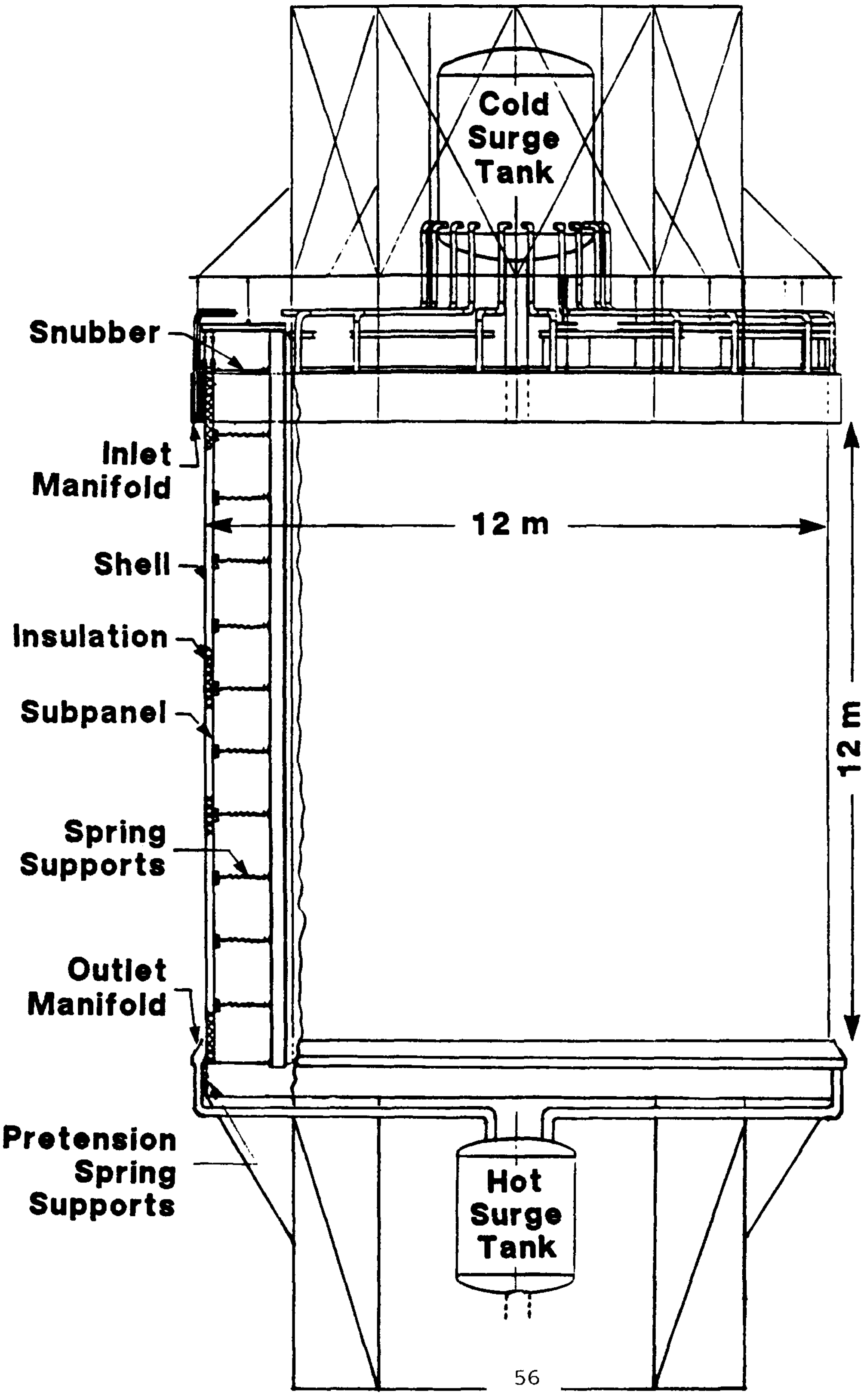

vsection/cet/06.01 88

Direct Absorption Receiver Solar Testing
PANEL RESEARCH EXPERIMENT

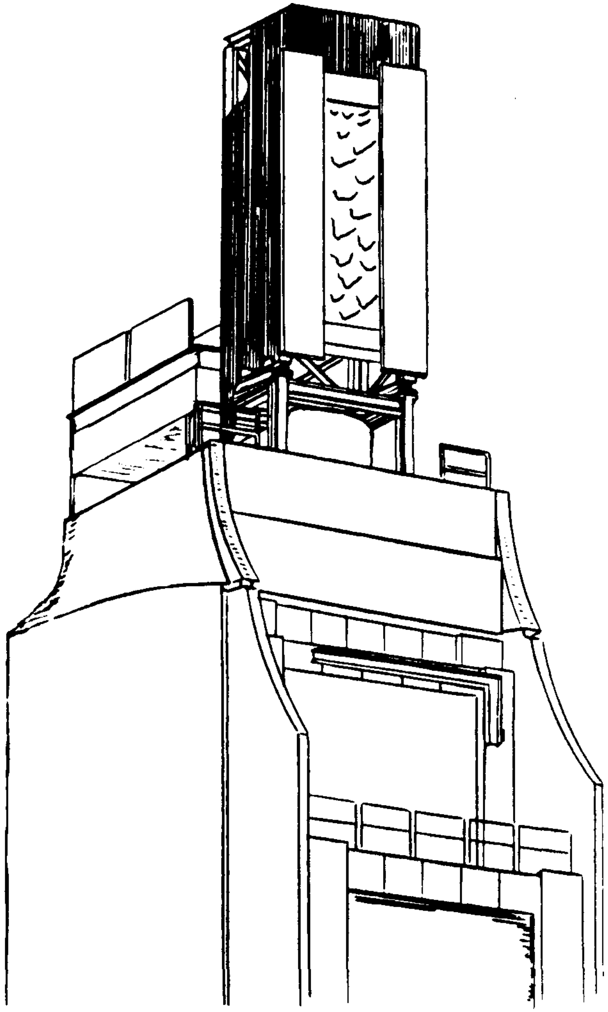

Objective:

- Demonstrate DAR Feasibility

Test Features:

- CRTF Tower
- Stand-Alone Salt Loop
- Total Power: 3 MW_t
- Peak Flux: 3 MW/m^2

Test Objectives:

- Flow Stability at Flux
- Panel Deformations
- Wind Effects
- Blackener Performance
- Receiver Efficiency
- Control Effects

vgpre/cet/02.01.88

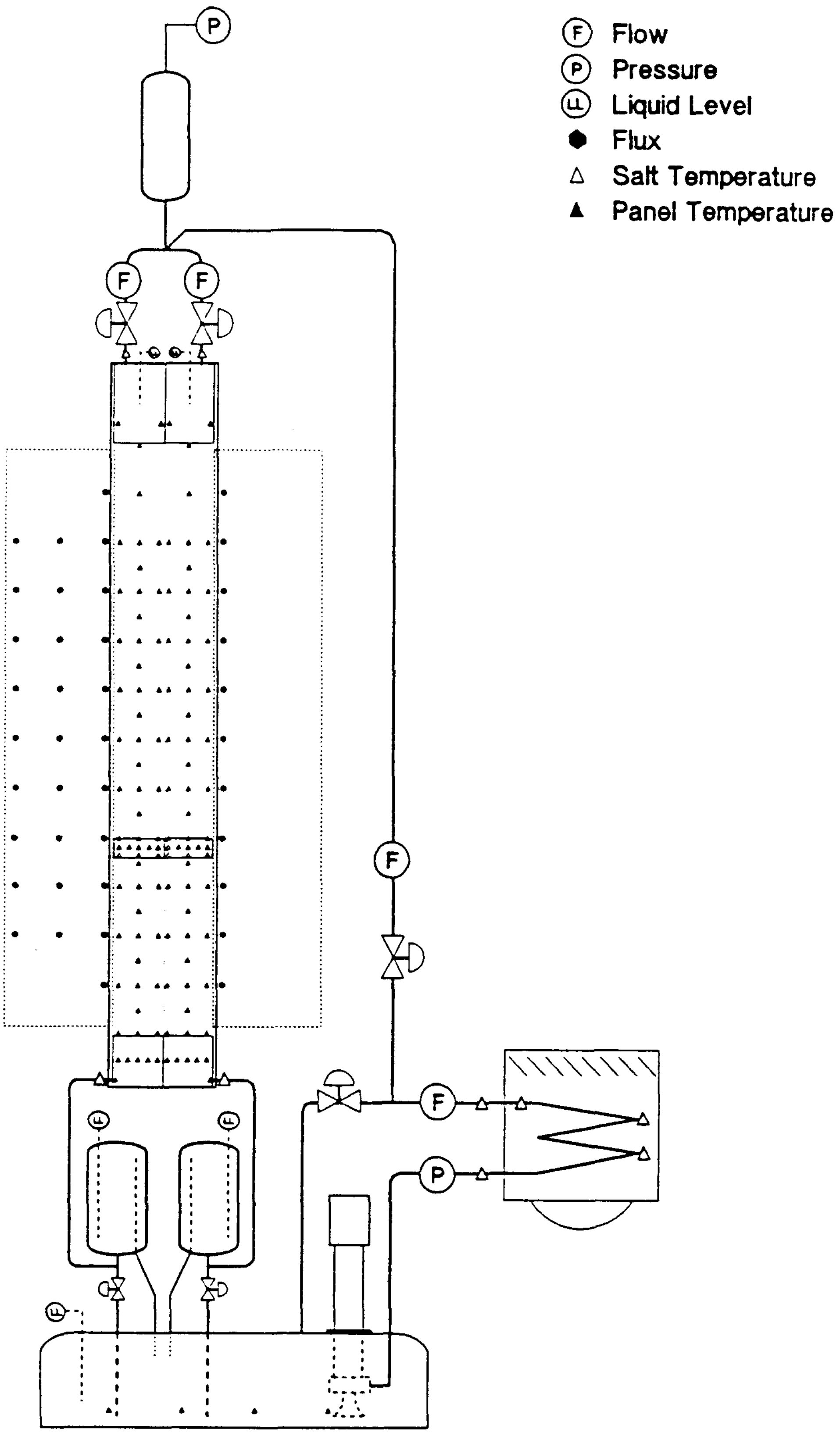

PRE 6m Test

CETyner
SNLA/6226
5/2/88

pre6m/cet/10.31.88

WHAT IS A VOLUMETRIC RECEIVER ?

- Working fluid is typically air
- Receiver (absorber) is made of a porous matrix material (layers of wire mesh, foamed materials, etc) which allows incident flux to penetrate deep into the matrix
- Incident flux is concentrated onto the absorber, air is drawn through the matrix and convectively heated
- Outlet air temperature is limited by matrix material
- Uses: electricity production, IPH, chemical processing

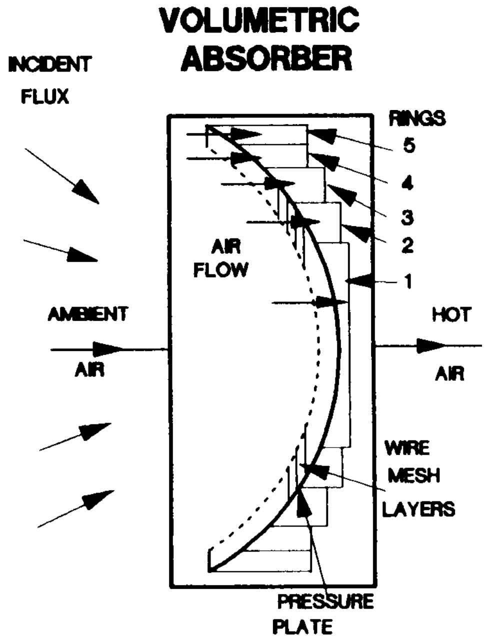

vrdoe1/2.1.89/jmc

VOLUMETRIC AIR RECEIVER POTENTIAL ADVANTAGES AND DISADVANTAGES COMPARED TO OTHER RECEIVERS

POTENTIAL ADVANTAGES

- Simple working fluid
  -readily avaliable
- low weight
- fewer and less serious failure modes
- cheap & quick repair
- rapid startup & response to transients
- high effective absorbtivity
- simple design & fabrication
- possibility of high temperatures (>550 c)

POTENTIAL DISADVANTAGES

- air is a poor heat transfer fluid
- large system components
- receiver without window
  - air at atmospheric pressure
  - large air flow volume
  - heat exchanger required
  - wind effects important

vrdoe2/2.1.89/jmc

VOLUMETRIC RECEIVER DEVELOPMENT STATUS

- Current development work

  200 KWt Volumetric Receiver test bed in Spain

  - tested 2 types of wire mesh absorbers (Swiss)
  - recently tested a metal "foil" absorber (German)
  - Sandia ceramic absorber to be tested in March
  - other absorbers to be tested in 89' (G , S , I)

- Volumetric Receiver computer models

  3 computer models are available for designing and analyzing volumetric receivers

  - layered wire mesh
  - porous matrix materials
  - layers of single fibers

- Future development work

  3 MWt receiver test being planned for the plataforma solar (Swiss to provide the receiver)

vrdoe3/2.1 89/jmc

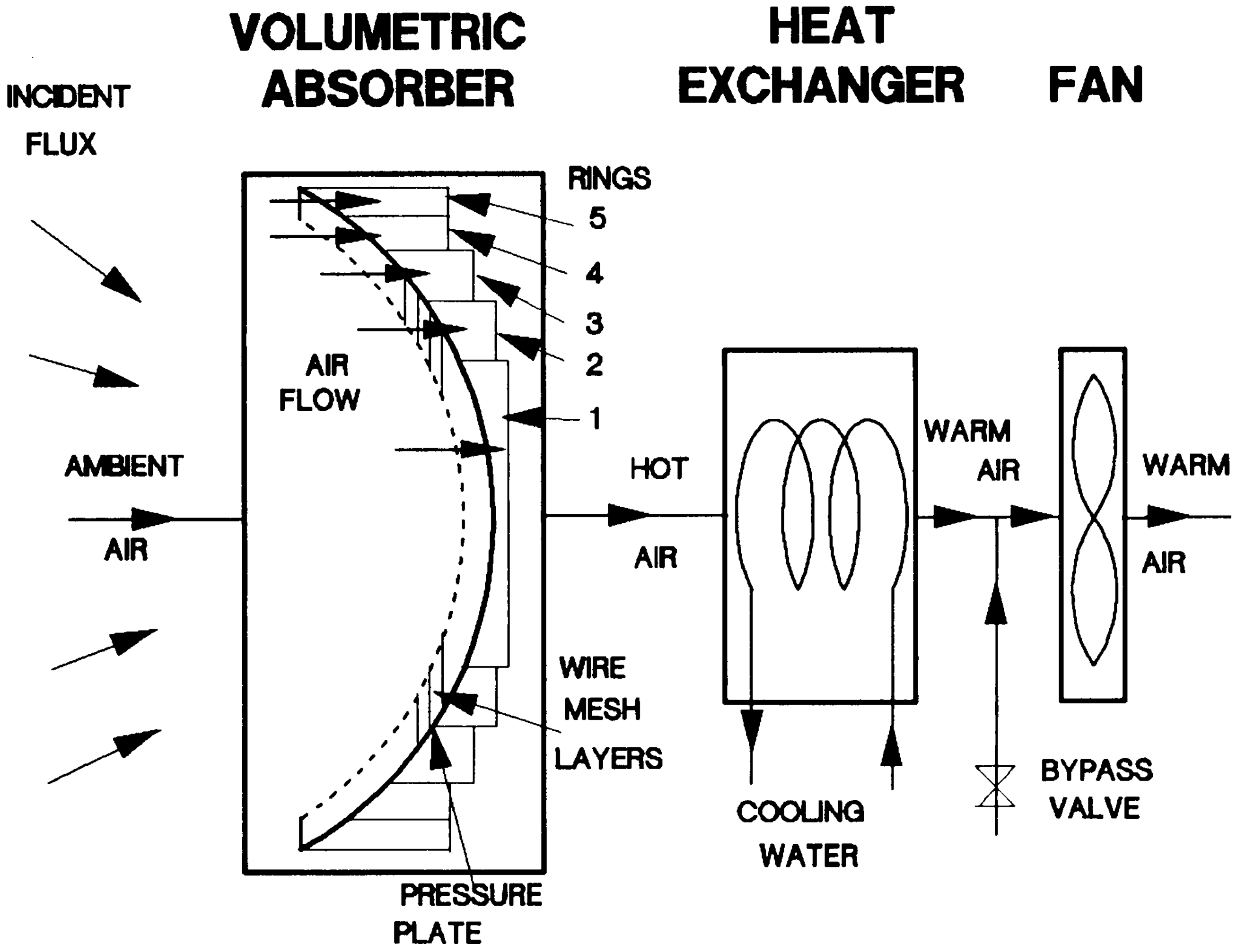

FIGURE 1 SCHEMATIC OF THE VOLUMETRIC RECEIVER

HEAT-PIPE SOLAR RECEIVERS FOR STIRLING ENGINES*

Douglas R. Adkins
Sandia National Laboratories
Albuquerque, New Mexico

ABSTRACT

Solar thermal dish-electric systems that are currently being developed will use heat pipes to transfer solar energy from the focal point of a parabolic dish concentrator to the working fluid of a Stirling engine. In a heat-pipe receiver, concentrated solar energy collected on the front (concave) surface of a dome is removed by the evaporation of liquid sodium on the back side of the dome. The sodium vapor then condenses on the heater tubes of a Stirling engine and transfers energy to the working fluid of the engine. Under the influence of gravity, the condensed sodium flows back to the evaporator surface where it is redistributed across the surface by the capillary action of a wick.

In the present program, heat-pipe solar receivers will be required to operate at sodium vapor temperatures of up to 800°C and transfer nominally 75-kW of thermal energy from the absorber surface to an engine's heater tubes. Peak fluxes on the absorber dome are on the order of 100 W/cm^2, and, without an adequate supply of sodium to the wick, the heat flux could burn a hole through the absorber dome in a few seconds. This situation places some rather stringent design requirements on the wick, and designing the wick-covered absorber dome has been one of the more critical elements of the receiver development task. Work is now being conducted at Sandia National Laboratories to develop and transfer the technology required to design, fabricate, and test heat-pipe solar receivers and their associated components.

For a heat pipe to work properly, the wick's capillary pumping capabilities must overcome both body forces (gravity and acceleration loading) and flow losses that are developed as the liquid passes through the porous matrix of the wick. Models have been developed at Sandia to predict pressure drops in wicks covering dome-shaped absorber surfaces. These models are used to explore various options of arranging wick materials across the absorber domes, and they have also been used in investigating artery systems to reduce flow losses in the wick.

---

* This work was performed at Sandia National Laboratories, which is operated for the U.S. Department of Energy under contract number DE-AC04-76DP000789.

Various methods of fabricating and attaching wick structures to absorber domes are also being explored. Current efforts at Sandia are focused on constructing wicks from stainless steel screens. Steel screens are available in a variety of mesh sizes and they can be easily formed into domed-shapes, sintered into porous plates, and welded to an absorber dome. Methods of forming wicks directly on the absorber surface by plasma spraying or sintering metal powders are also being studied.

In addition to the fabrication and modeling efforts, techniques have been developed to measure the flow characteristics of wick materials. Properties such as flow resistance and surface pore size (pore size is important in determining capillary pumping capabilities) can be measured in both component and assembled wick configurations. Measuring the properties of wick components provides the data required for wick modeling tasks, and measuring the flow characteristics of fabricated evaporator domes is a useful quality assurance procedure that allows expensive and lengthy testing to be avoided in many cases. Heat-pipe receiver developers can also establish their own wick testing capabilities using the simple and inexpensive test procedures developed at Sandia.

Sandia is now preparing to conduct bench-scale and full-scale tests of heat-pipe solar receivers. In the bench-scale test, a wick covered section of a 3-foot long, 1 3/4-inch diameter pipe will be illuminated by quartz lamps. This bench-test will answer important questions about designing heat pipe wicks for the high flux encountered in solar thermal systems. Information that is gathered in the bench-scale test will be transferred into the design of full-scale heat-pipe solar receivers for 25-kWe dish-electric systems.

OPERATION OF A HEAT-PIPE SOLAR RECEIVER

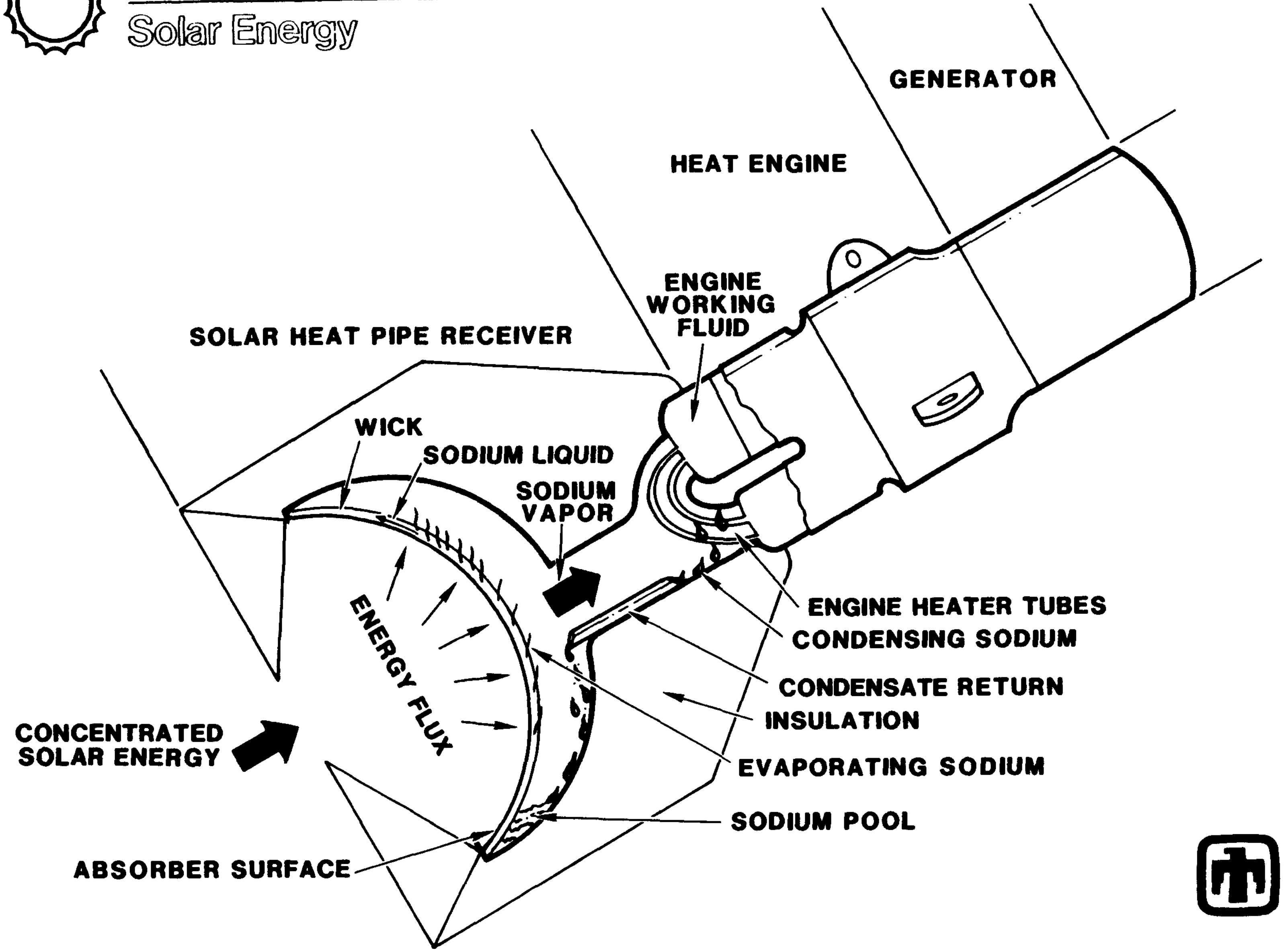

OPERATION OF A WICK

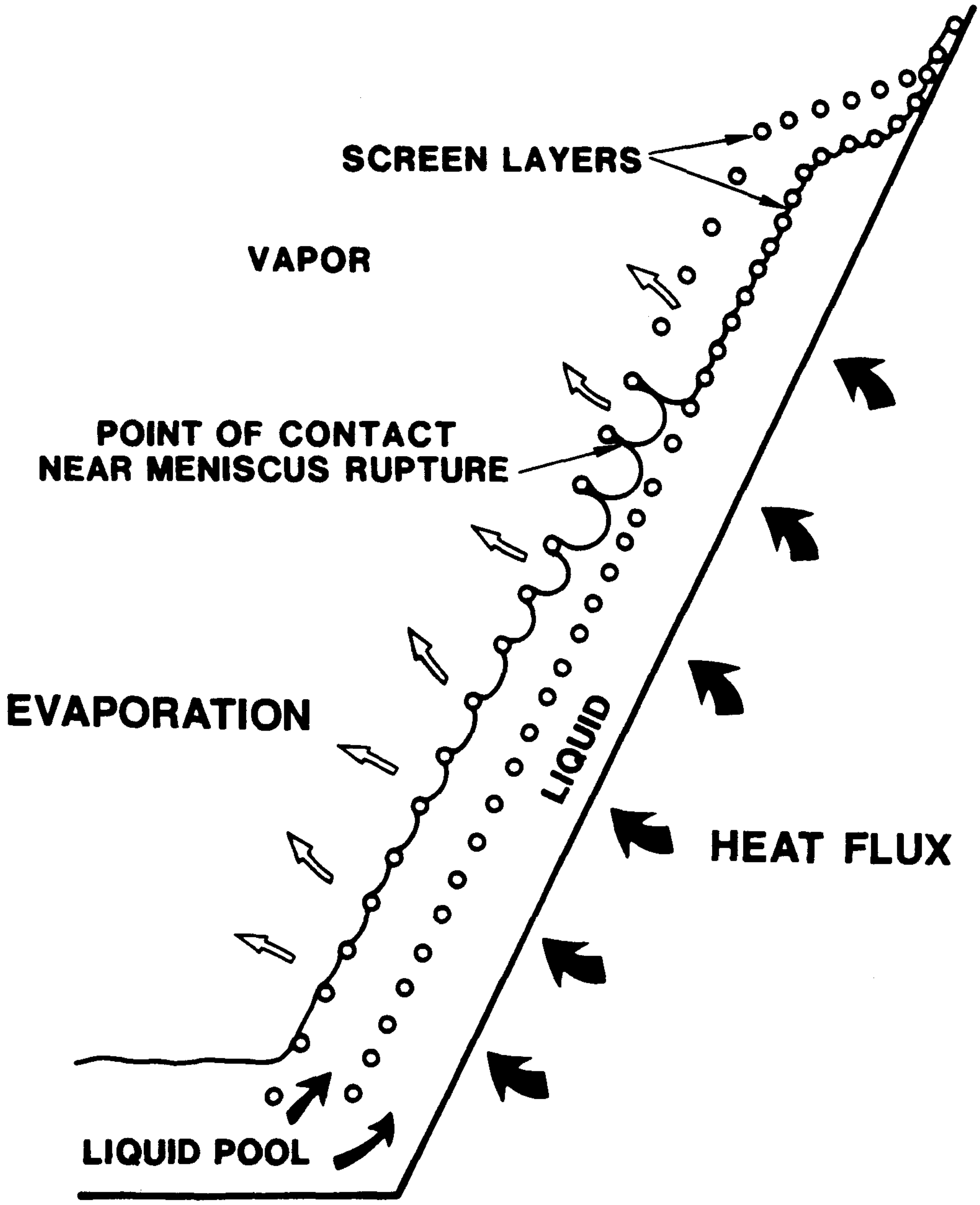

WICK REQUIREMENTS

<u>**HIGH CAPILLARY PUMPING CAPABILITIES**</u>

SMALL SURFACE PORES (≈30 μm)

NO IMPERFECTIONS AT ATTACHMENT POINTS

<u>**LOW PUMPING REQUIREMENTS**</u>

LOW VERTICAL RISE

HIGH PERMEABILITY (≈80% POROSITY w/o ARTERIES)

<u>**LOW TEMPERATURE DROP**</u>

THIN WICK (≈1 mm)

REDUCE HEAT FLUX

WICK MATERIALS

SCREENS
POWDERED METALS
METAL FELTS
GROOVED SUBSTRATE

Forming Techniques

Screens:
- Bias Stretching
- Spin-Forming
- Hydro-Forming

Metal Powders:
- Retaining Dams
- Slurry Application

Metal Felts:
- (Questionable)

Grooved Substrate:
- Machining
- Chemical Etching

Fastening Techniques

Screens:
- Resistance Welding
- E-Beam Welding
- Sintering
- Brazing
- Mechanical Force

Metal Powders:
- Sintering
- Plasma Spraying
- Flame Spraying

DISCRETIZED WICK MODEL

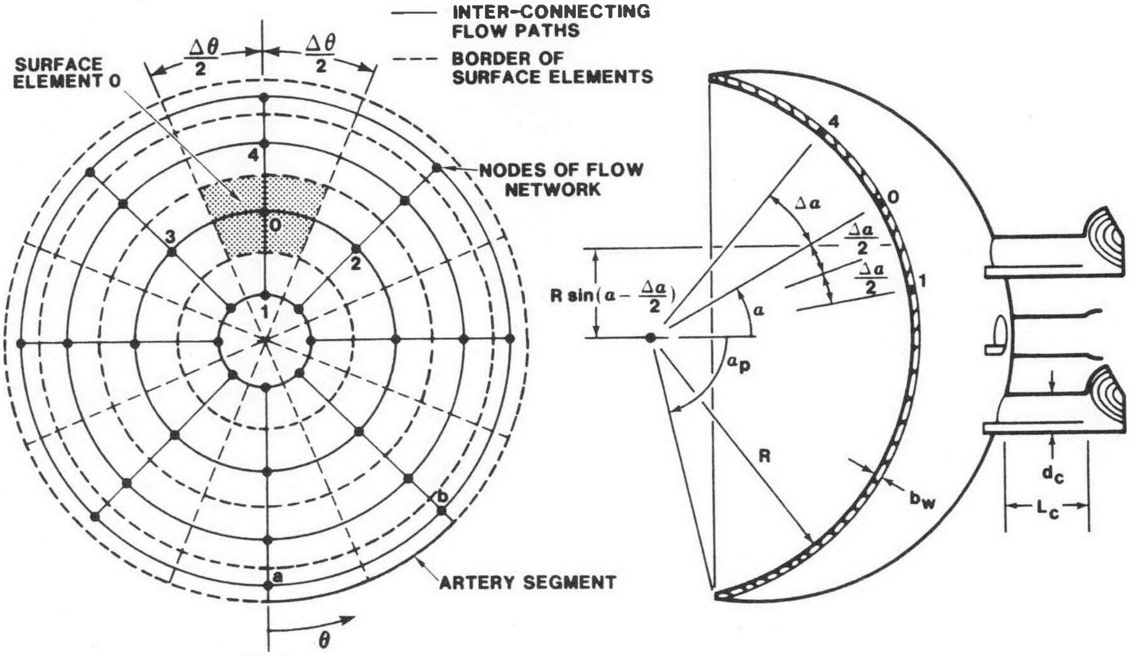

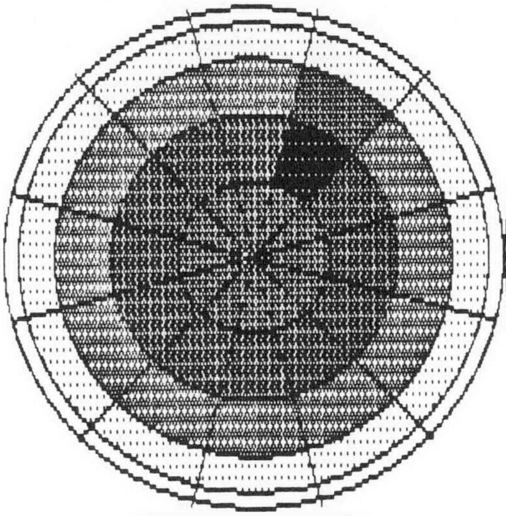

FLUX DISTRIBUTION

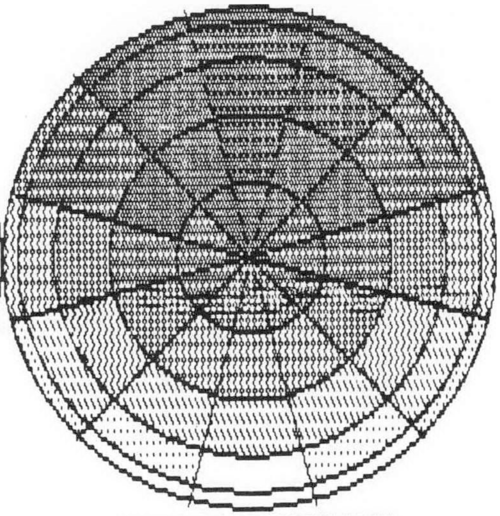

PRESSURE DISTRIBUTION

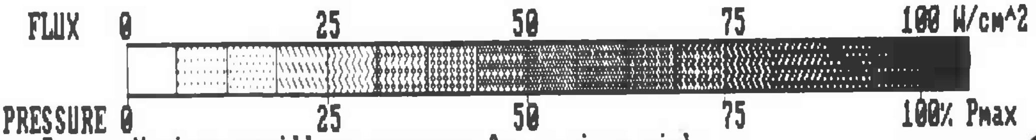

Pmax = Maximum capillary pressure for a given wick

PERMEABILITY MEASUREMENTS ON A FORMED WICK

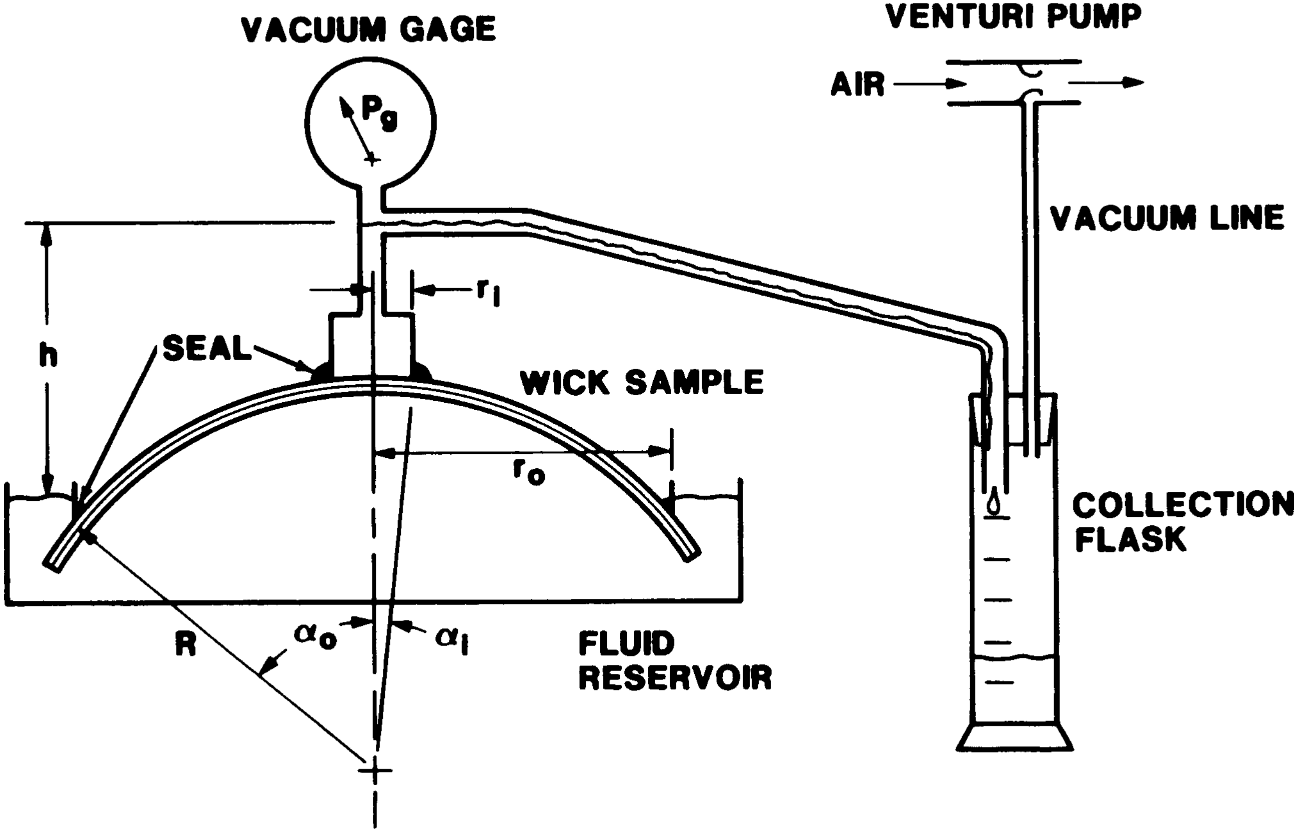

HEAT-PIPE TEST VESSEL

HEAT-PIPE TEST VESSEL

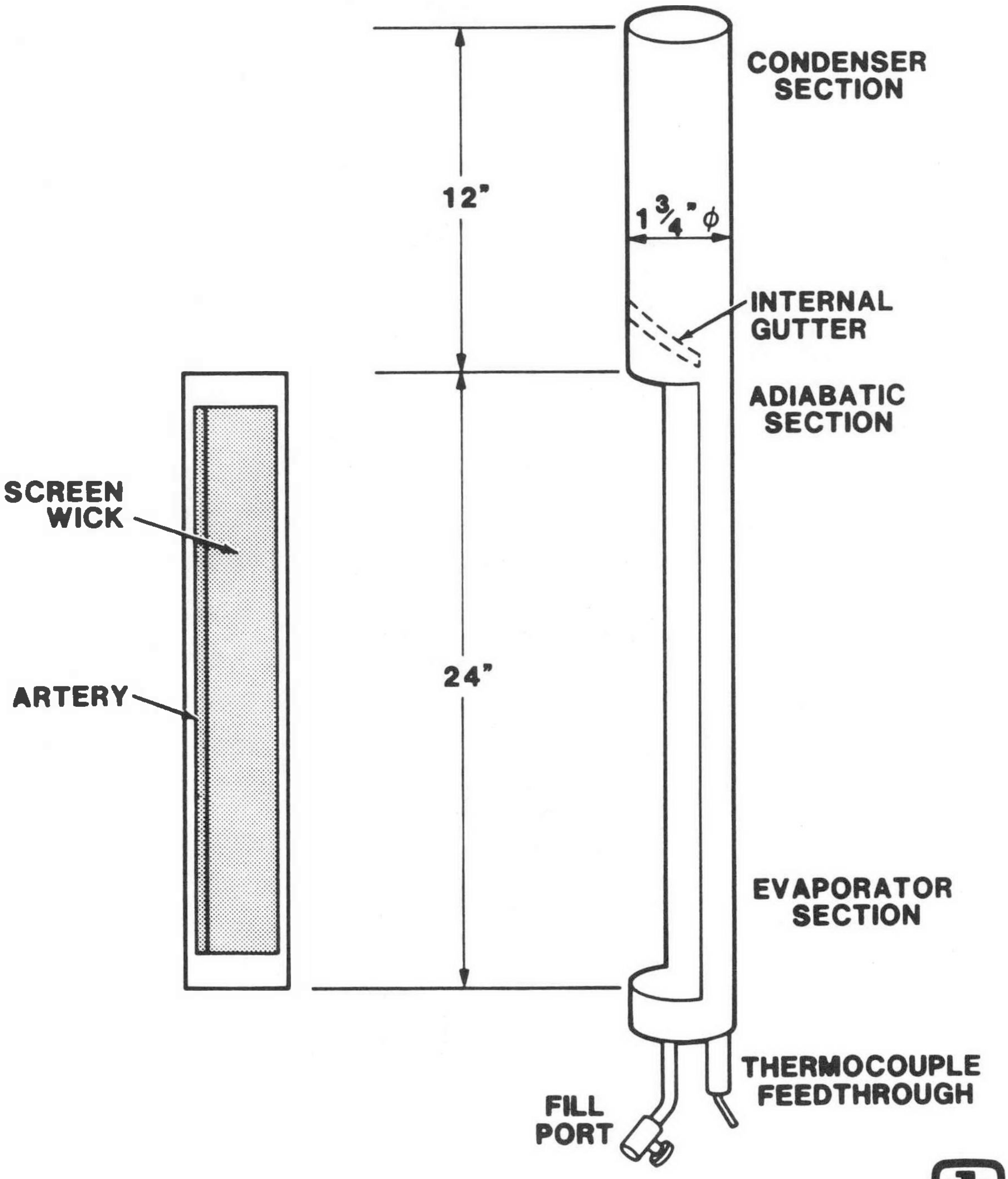

HEAT-PIPE TEST APPARATUS

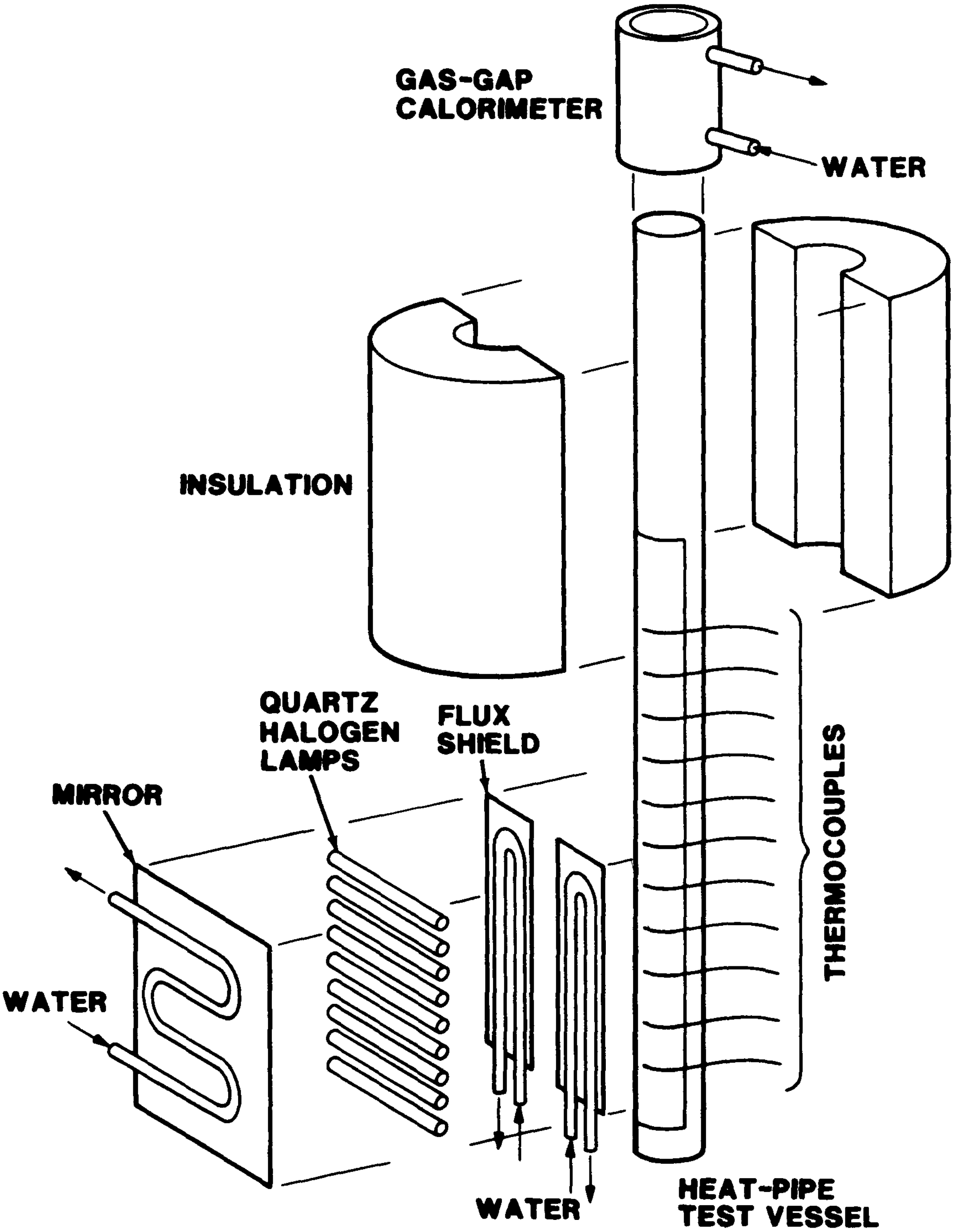

HEAT-PIPE SOLAR RECEIVER WITH A SCREEN WICK

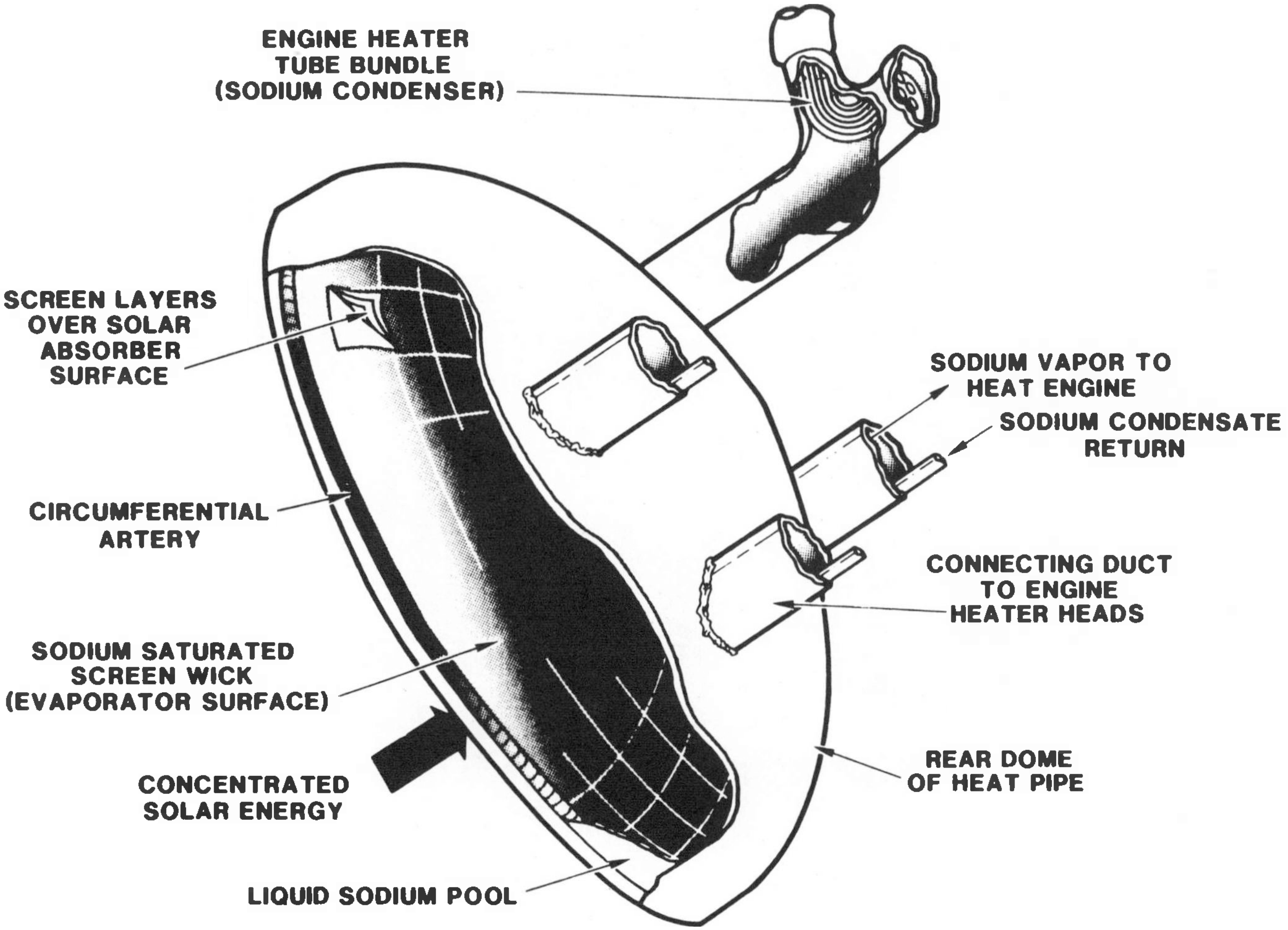

SELECTED REFERENCES

Adkins, D. R., "Analysis of Heat Pipe Receivers for Point-Focus Solar Concentrators," SAND88-0093, Sandia National Laboratories, Albuquerque, NM, 1988.

Andraka, C. E., and R. B. Diver, "Reflux Heat-Pipe Solar Receivers for Dish Electric Systems," SAND87-2976C, Sandia National Laboratories, Albuquerque, NM, 1988.

Brennan P. J. and E. J. Kroliczek, "Heat Pipe Design Handbook: Volume I and II," NTIS Publication No. N81-70112 and N81-70113, June 1979.

Droher, J. J., and S. E. Squier, Performance of the Vanguard Solar Dish Electric Engine Module, EPRI AP-4608, Electric Power Research Institute, Palo Alto, CA, July 1986.

Dunn, P. D., and D. A. Reay, Heat Pipes, 3rd ed., Pergamon Press, Oxford, United Kingdom, 1983.

Keddy, E., J. T. Sena, K. Woloshun, M. A. Merrigan, and G. Heindenreich, "An Integrated Heat Pipe - Thermal Storage Design for a Solar Receiver," Paper No. 869176, Proceedings of the 21st IECEC, San Diego, CA, August 1986.

Marcus, B. D., "Theory and Design of Variable Conductance Heat Pipes," NASA Contractor Report, NASA CR-2018, 1972.

Mechanical Technology Inc., "Conceptual Design of an Advanced Stirling Conversion System for Terrestrial Power Generation," NASA Contractor Report, NASA CR-180890, January 1988.

Stirling Technology Co., "25 kW$_e$ Solar Thermal Stirling Hydraulic Engine System, Final Conceptual Design Report," NASA Contractor Report, NASA CR-180889, January 1988.

POOL BOILER RECEIVER BENCH TEST RESULTS*

James B. Moreno
Charles E. Andraka

Sandia National Laboratories
Albuquerque, New Mexico 87185

ABSTRACT

The feasibility of competitive modular bulk electric power from the sun may be greatly enhanced by the use of a reflux heat pipe receiver to combine a heat engine such as Stirling with a paraboloidal dish concentrator. This combination represents a potential improvement over previous successful demonstrations of dish-electric technology in terms of enhanced performance, lower cost, longer life, and greater flexibility in engine design. There are, however, important issues and unknowns which must be addressed to determine engineering feasibility of these devices.

In the pool boiler reflux receiver, concentrated solar radiation causes liquid metal (sodium or potassium) to boil. The vapor flows to the engine heater heads, where it condenses and releases the latent heat. The condensate is returned to the receiver absorber pool by gravity (refluxing). This is essentially an adaptation of heat pipe technology to the peculiar requirements of concentrated solar flux, and provides many advantages over conventional heated tube receiver technology.

A pool boiler bench test program was initiated at Sandia National Labs in order to address several pool boiler concerns before proceeding to on-sun testing. The first of these concerns was that nucleate boiling initiation with liquid metals might require unacceptably high incipient superheats due to the high thermal conductivity of the fluid and its surface wetting characteristics. In addition, once boiling starts, for similar reasons, the boiling might be unstable, continually starting and stopping. Due to the high heat fluxes involved, approaching 100 W/cm^2, transition to film boiling during startup was also a concern. Finally, once stable boiling is accomplished, the surface cyclic thermal stress caused by bubble departure might quickly fatigue the surface.

A bench test was designed with a 1-3/4" dia 316L stainless tube with a 12 inch pool of sodium. Heat was provided by a quartz lamp array, with a net flux into the sodium of about 70 W/cm^2. The condenser end was cooled with a gas-gap cold water calorimeter, with which the heat rejection rate could be controlled by a variable ratio mixture of helium and argon. The device was extensively instrumented with thermocouples for safety and data.

---

* This work was performed at Sandia National Laboratories which is operated for the U.S. Department of Energy under contract number DE-AC04-76DP000789.

The first attempts at operation resulted in unstable boiling. The boiling would occur for fractions of a minute, and then boiling would simply stop. As the superheat increased, at some point a bubble would inflate and boiling would initiate again. This resulted in rapid temperature fluctuations in excess of 100°C, and frequent automatic safety shutdowns.

An artificial cavity was added to the sodium side of the heated wall. Boiling stability theory suggests that if the cavity is deep enough, then, due to the thermal gradient through the wall, liquid sodium will not penetrate to the bottom of the cavity. The cavity will then remain an active nucleation site, and boiling will be stabilized. Upon operation, it was apparent that the modification greatly improved boiling stability. The cavity was placed near the top of the heated area in order to determine if the boiling would propagate down the surface. The imbedded thermocouples verified that stable boiling covered the entire heated area.

Boiling initiation typically involved a single large transient wall superheat ("bump") at about 600°C, followed by stable boiling. The device was operated for 100 hours at 800°C with about 20 cycles to ambient temperature, simulating 1 month of on-sun testing. In addition, stable boiling was verified at reduced power levels and at 700°C. One area of concern is a hot restart. If the power is removed long enough for the pool to cool to 700°C, and then power is returned, the incipient boiling superheat needed to restart produces extremely-high wall temperature superheat. If the power is not re-applied until the pool drops to 600°C, the superheat produces much less-severe wall temperatures.

The pool boiler bench test demonstrated stable boiling for 100 hours with 20 cycles to ambient. In addition, a safety shutdown and data system was developed that can be applied to the on-sun testing. Once on-sun operation is demonstrated, further development work must be pursued. Long term materials compatibility, life, and stress issues must be addressed before the pool boiler can be a commercial reality.

Reflux Receiver Development Issues

Pool Boiler Concerns

- Nucleate boiling initiation
- Surface cyclic thermal stresses
- Film boiling
- Boiling stablity

Sandia Pool Boiler Bench Test

Objectives:

- Demonstrate stable boiling
- Demonstrate materials compatability for equivalent of 1 month test
- Demonstrate safe operation
- Characterize sodium boiling

Boiling Test Module

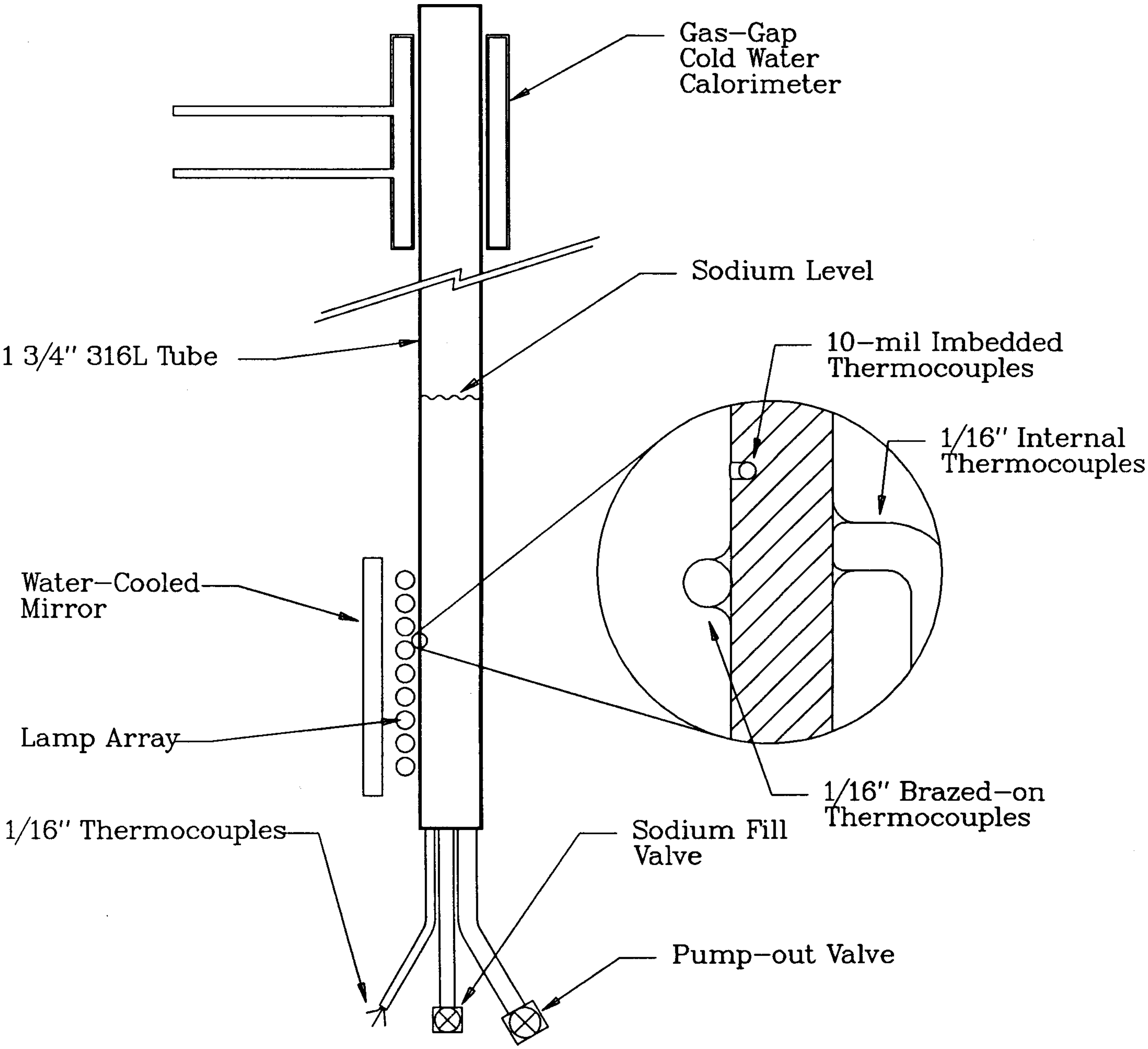

A018901 CEA 1/89

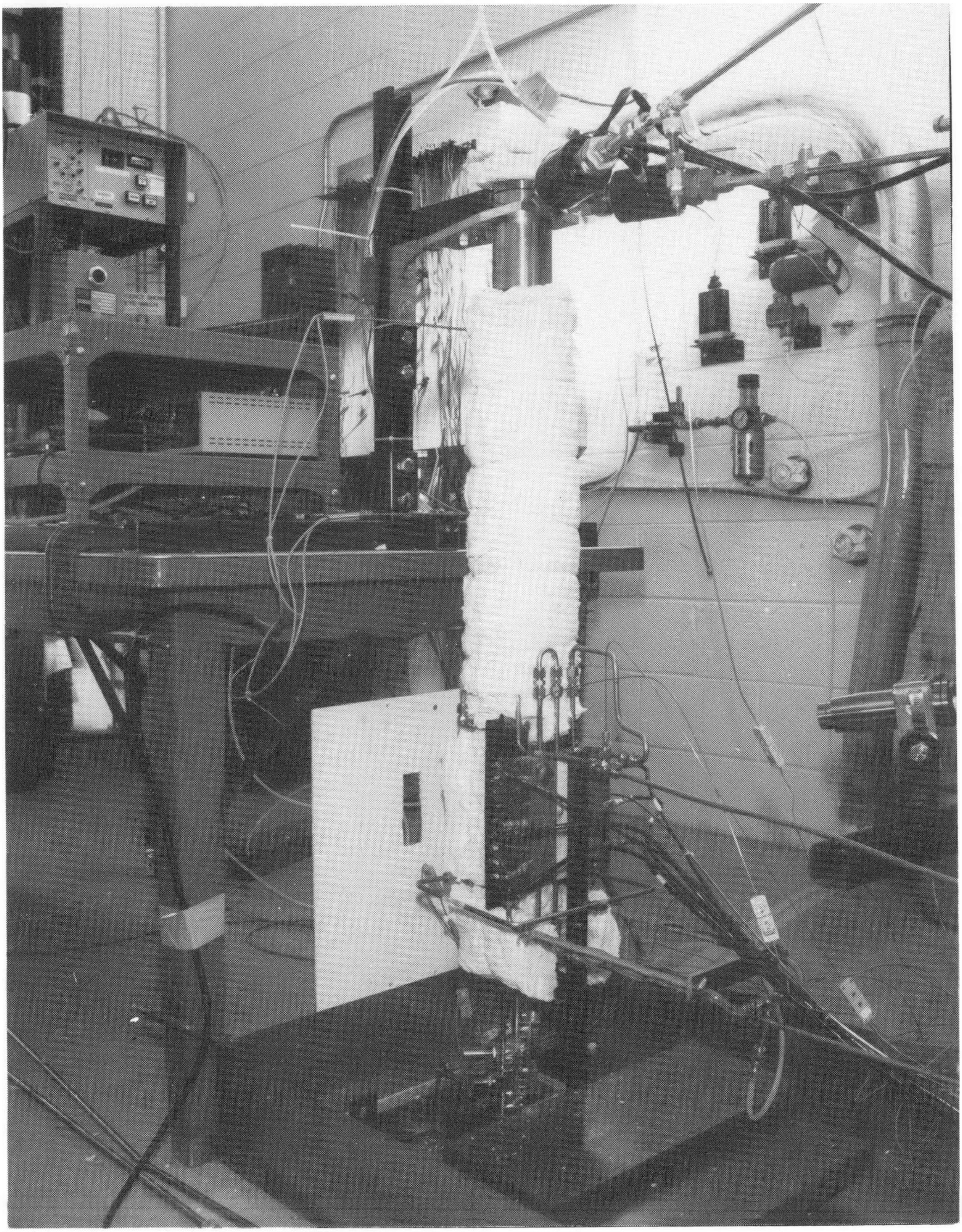

Unstable Boiling

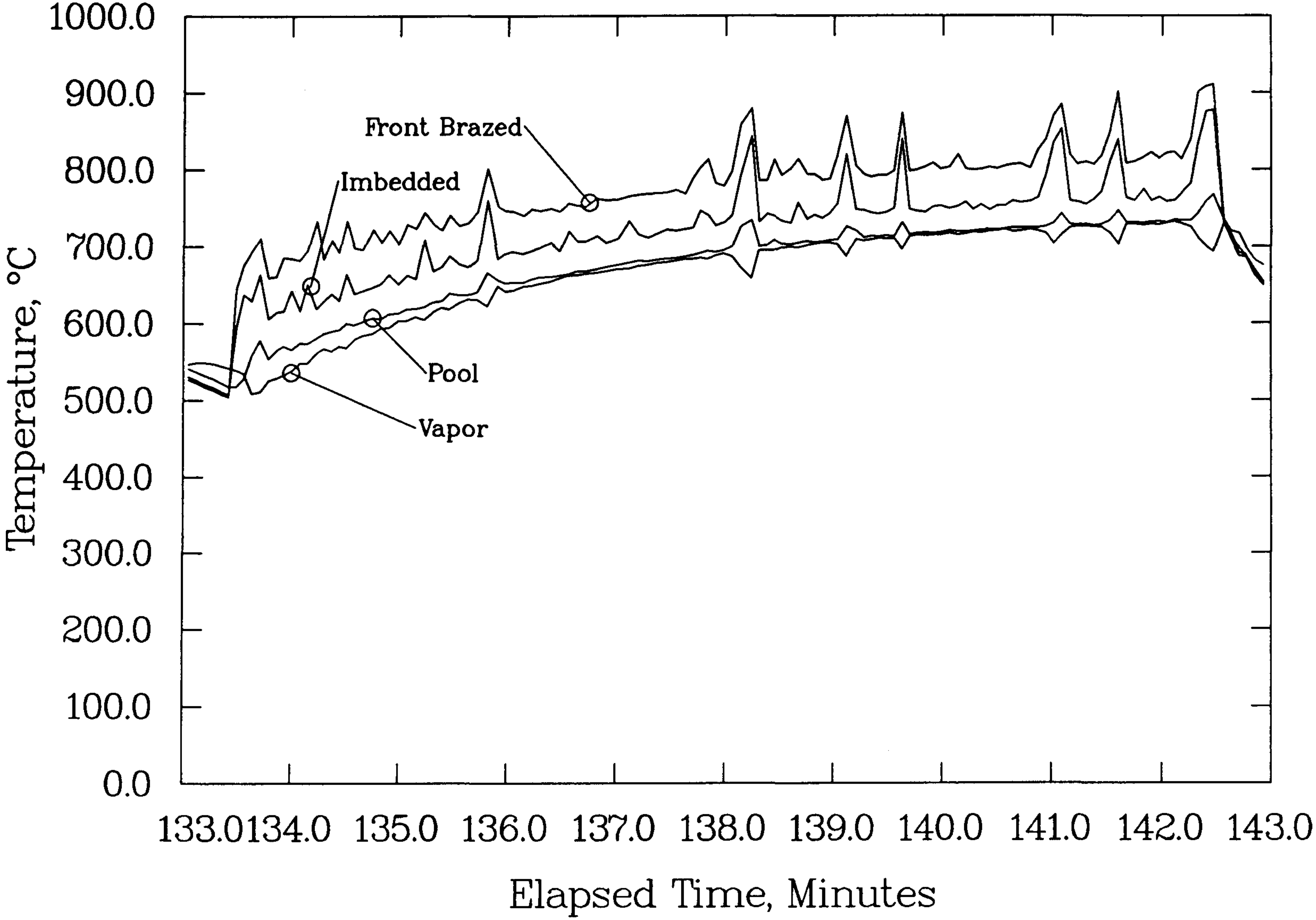

Nucleate Boiling

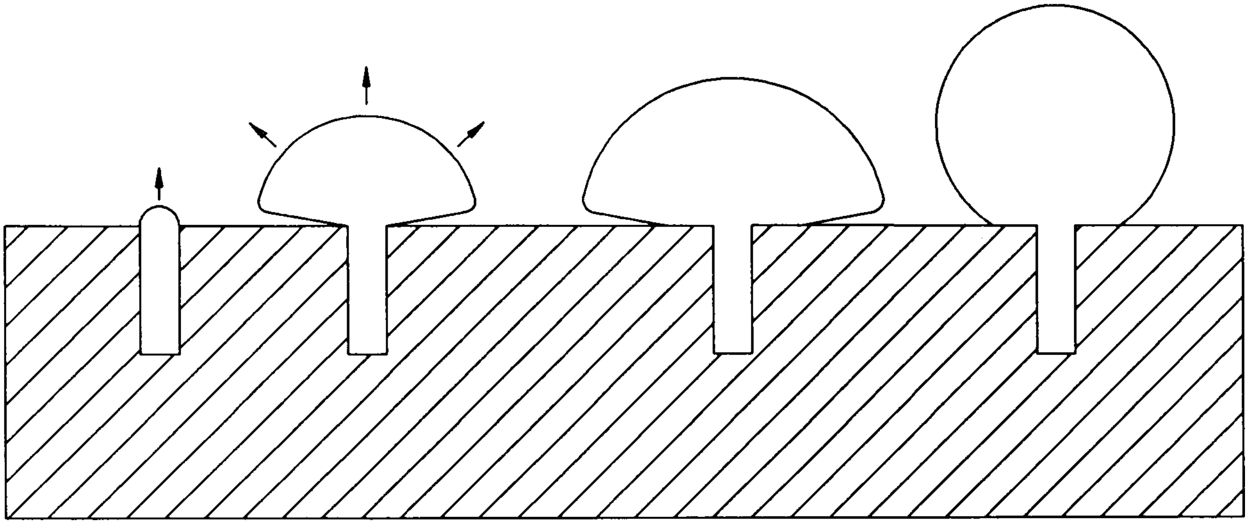

Bubble Growth

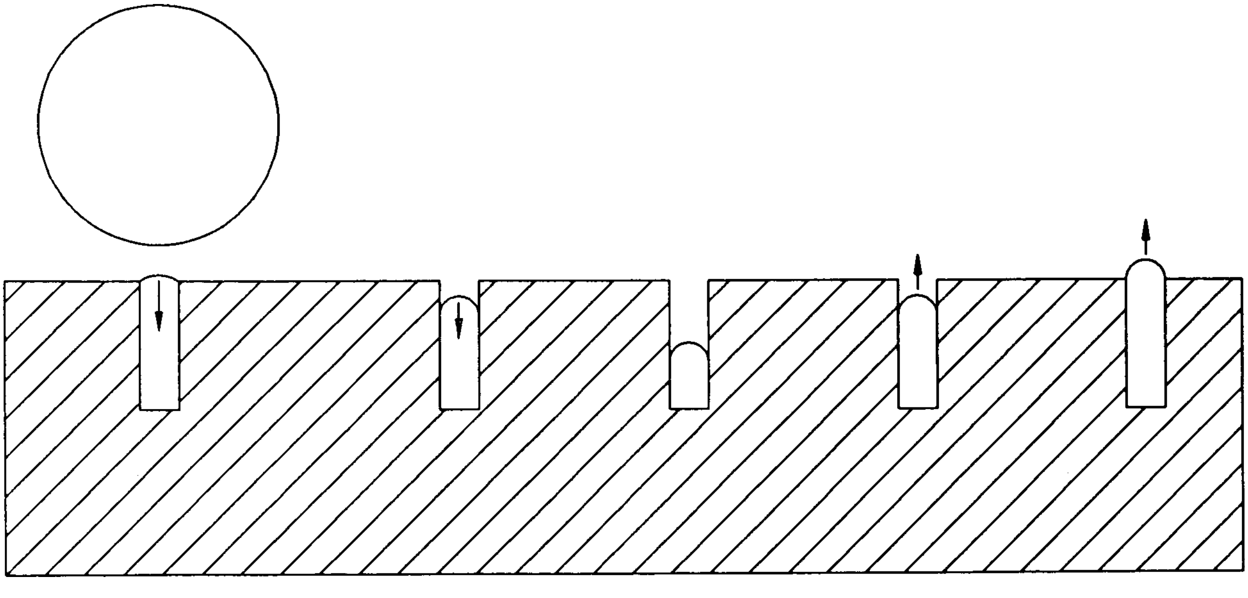

Waiting Period

After O.E. Dwyer
Boiling Liquid Metal Heat Transfer

Stable Boiling

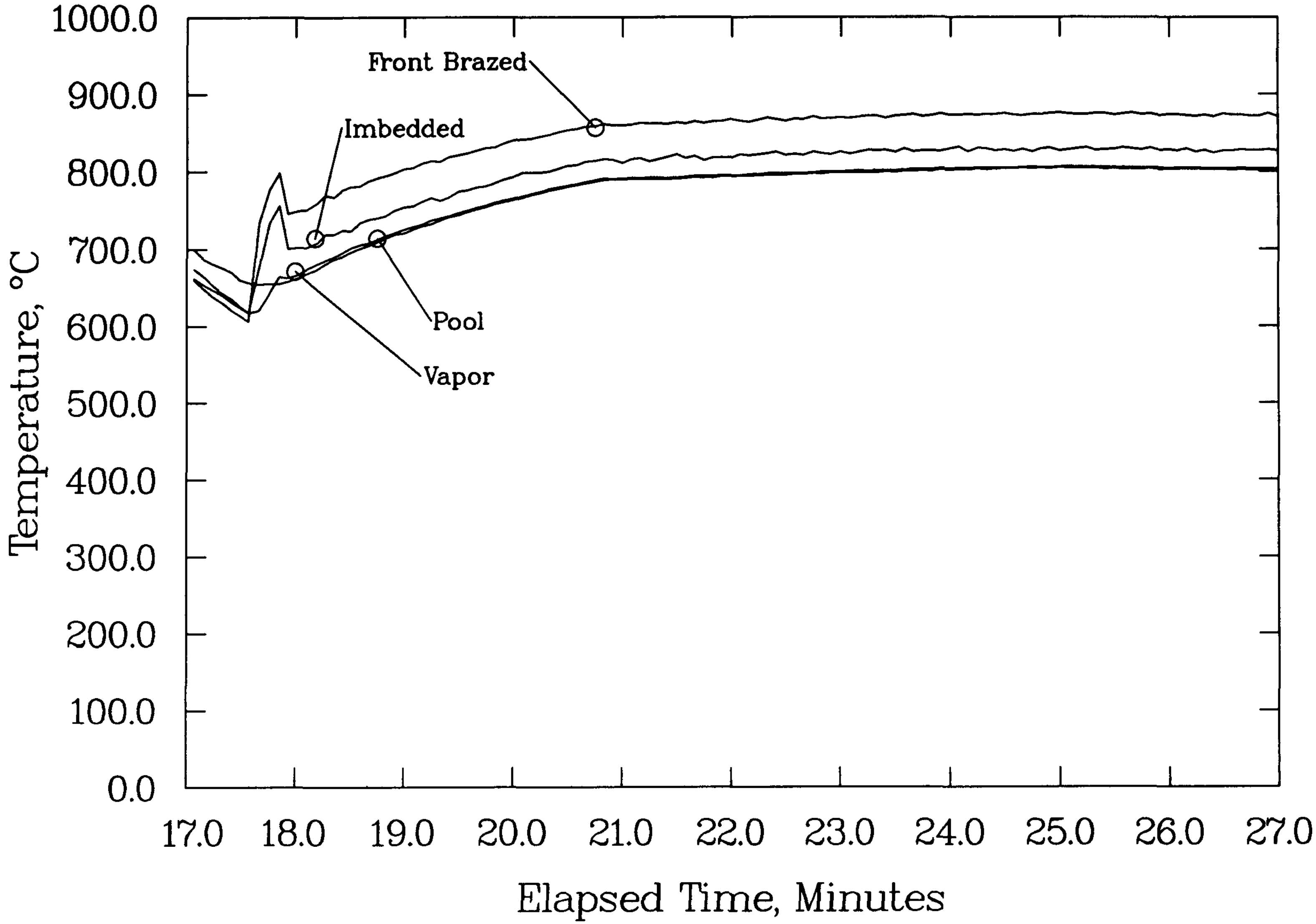

Startup

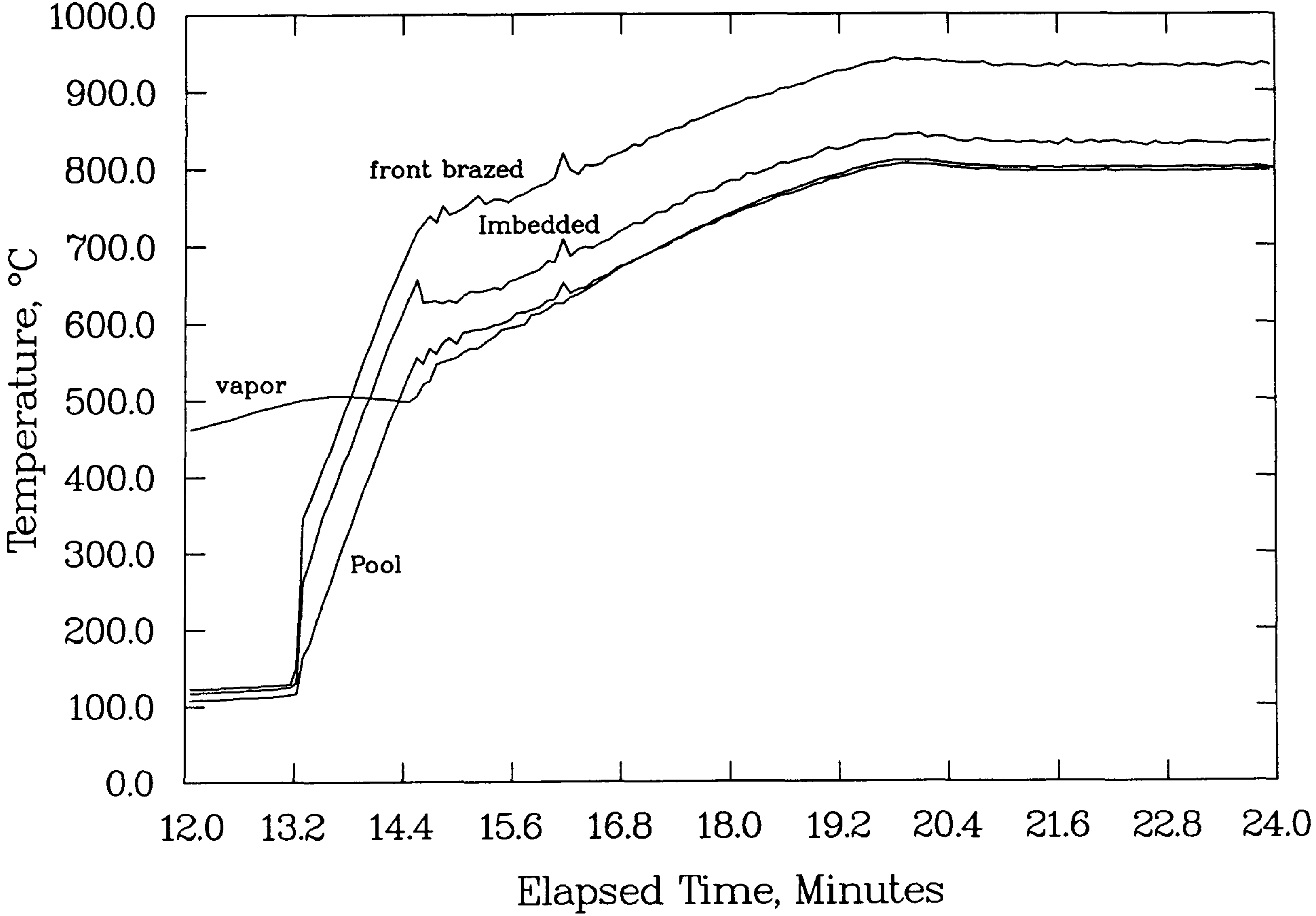

A018906

CEA 1/89

Imbedded Thermocouples

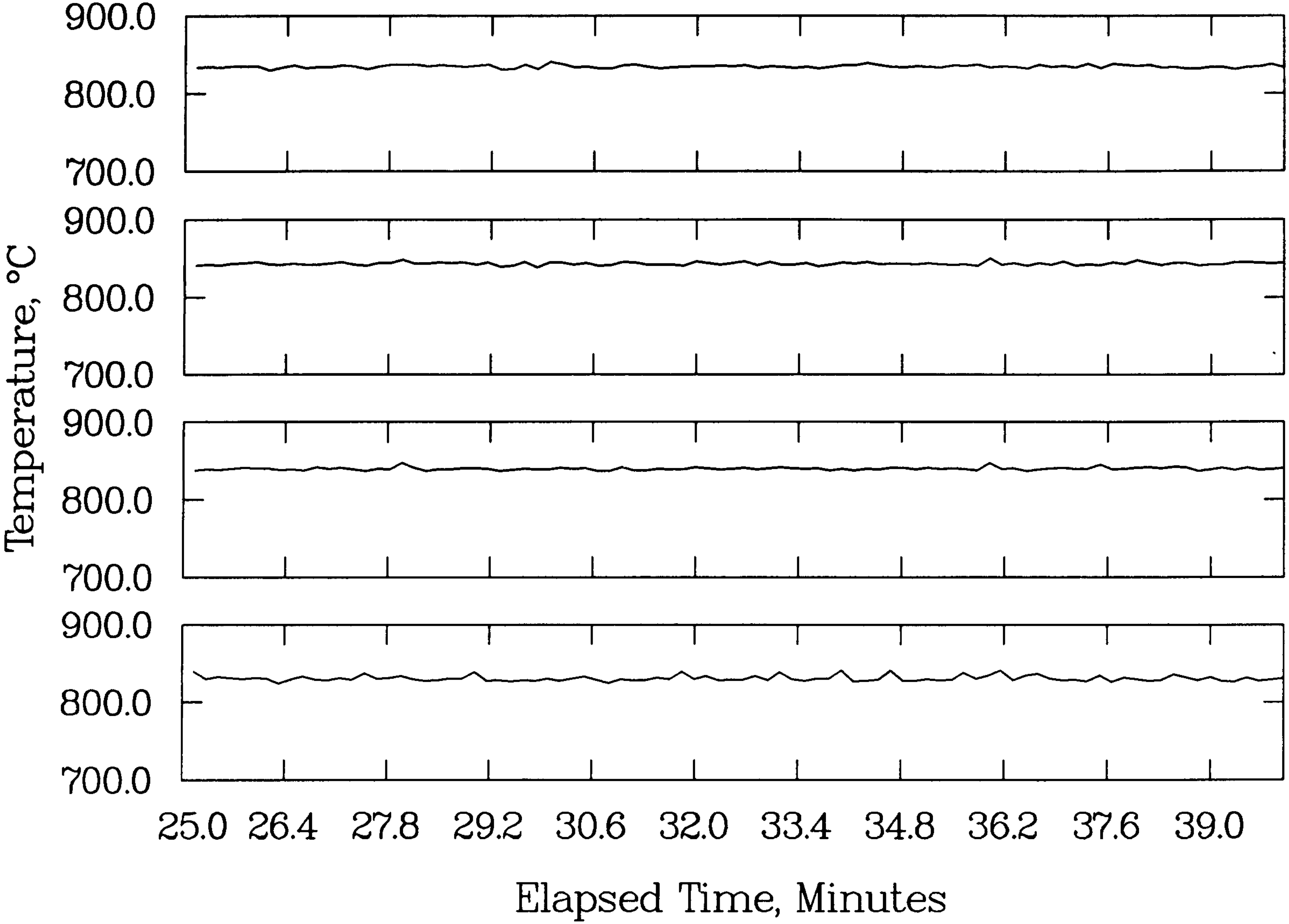

Hot Restart

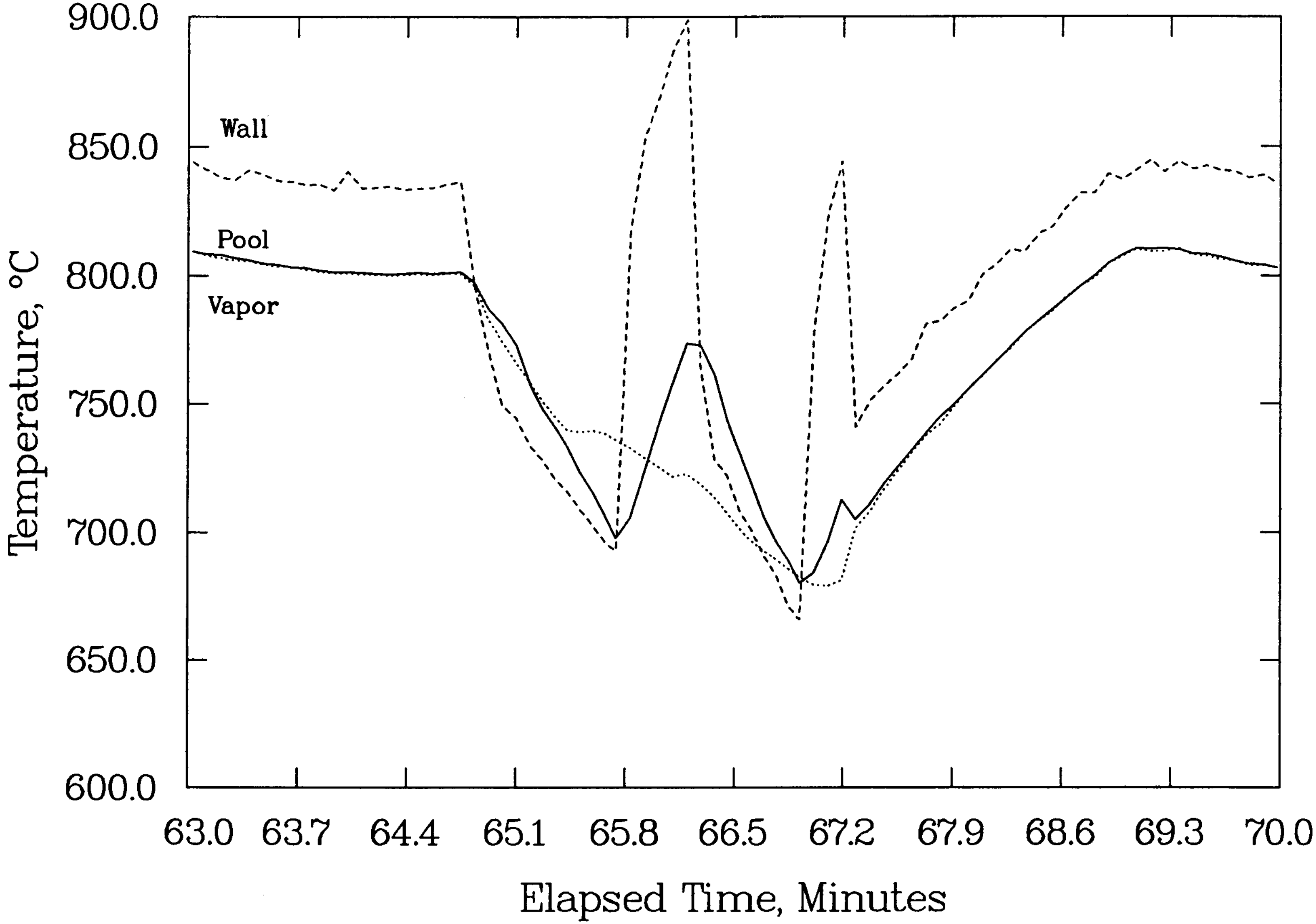

A018903

CEA 1/89

Sandia National Laboratories
Solar Energy

Sandia Pool Boiler Bench Test

Accomplishments:

- Demonstrated baseline boiler instability
- Stabilized boiling
- 100 hr. test completed
- 20 cycles to ambient
- Proved data/control/safety system for dish tests
- Built up lab capability for alternate concept testing

A028903 CEA 2/89

Sandia National Laboratories
Solar Energy

Sandia Pool Boiler Bench Test

Development Issues:

- Materials life at high temperatures
  - –Fatigue
  - –Creep
  - –Sodium compatibility
  - –Oxidation
  - –Welds and brazes
- Simple operation/safety controls
- On–sun testing

A028902 CEA 2/89

KINEMATIC STIRLING ENGINE STATUS
FOR
SOLAR THERMAL ELECTRIC SYSTEMS*

Kevin L. Linker
Solar Thermal Electric Technology Division
Sandia National Laboratories
Albuquerque, New Mexico

ABSTRACT

The Department of Energy's (DOE) Solar Thermal Program has as one of its program tasks the development and evaluation of conversion devices that are applicable to solar thermal electric systems. To date, the primary research and development activities have involved the dish-electric concept, which consists of a heat engine, solar receiver, and generator combined to form a power conversion assembly (PCA), which is then mounted at the focal plane of a parabolic dish concentrator. The solar thermal program has identified the Stirling cycle heat engine as the conversion device with the most potential for meeting the program goals for annual engine efficiency (41%), reliability (50,000 hour life), and cost ($300/kWe installed, 1984 $).

Of the available Stirling heat engines the United Stirling 4-95 MKII automotive engine has received the most extensive development for dish-electric systems. The 4-95 was modified for the solar application by incorporating a direct-absorbing solar receiver with the engine heater heads, adapting the power control scheme, and redesigning the lubrication system because of the inverted operation. With DOE funding, the Advanco Corporation used this modified engine in a dish-electric demonstration project called Vanguard. This system demonstrated an overall net system conversion efficiency, solar-to-electric, of 29.4%. This is the highest conversion efficiency achieved by any solar system technology. However, because this engine was originally designed as an automotive engine, its design life is limited to 3500 hours (100,000 miles) before major overhauls. The directly illuminated heater heads/solar receiver and complex power control system were the cause of problems during the demonstration. McDonnell Douglas Corporation utilized a similar United Stirling engine for a dish-electric system that it developed. The system demonstrated conversion efficiencies of 30%. However, again, the limitations of the automotive engine design caused problems for a reliable solar application.

To advance the Stirling technology toward longer life and commercialization, Sandia recently acquired a Stirling Thermal Motors, Inc. (STM) kinematic Stirling engine, STM4-120 for evaluation. This is a four-cylinder engine

---

* This work was performed at Sandia National Laboratories, operated for the U.S. Department of Energy under contract number DE-AC04-76DP000789.

with a double-acting piston design. It is nominally rated for 25 kW of shaft power output while operating at a heater head temperature of 800°C. STM has demonstrated 23 kW of shaft power with a conversion efficiency of 40% at a heater temperature of 785°C. This engine was designed from the outset to be a long-life machine --50,000 hours before major overhauls. To obtain this life STM has incorporated a pressurized crankcase (increase rod seal life), variable swashplate (efficient and reliable power control), and heat pipe technology (isothermal operation for better efficiency) into its engine. These features give the STM4-120 the potential to achieve the solar thermal program's operation and maintenance goals and increased system efficiencies.

Sandia's Solar Thermal Electric Technology and Testing Divisions will be bench testing the STM4-120 for performance and reliability characteristics at Sandia's recently constructed Engine Test Facility. Initial tests will utilize gas combustion as the heat source to operate the engine. The complete mapping of the engine's performance, ie. power and efficiency, will be a major task in the test procedure and reliability issues will be closely monitored. Sandia will be evaluating the engine through FY89 and FY90. In later programs, Sandia will incorporate the engine with a solar receiver for actual 'on-sun' testing.

WHY STIRLING CYCLE FOR DISTRIBUTED RECEIVER SYSTEMS

- High cycle efficiency (over 40%)
- Continuous external heating, efficient, hybrid
- High power to weight ratio (~18 kg/kWe)
- Potential for long life and high reliability

STIRLING CYCLE

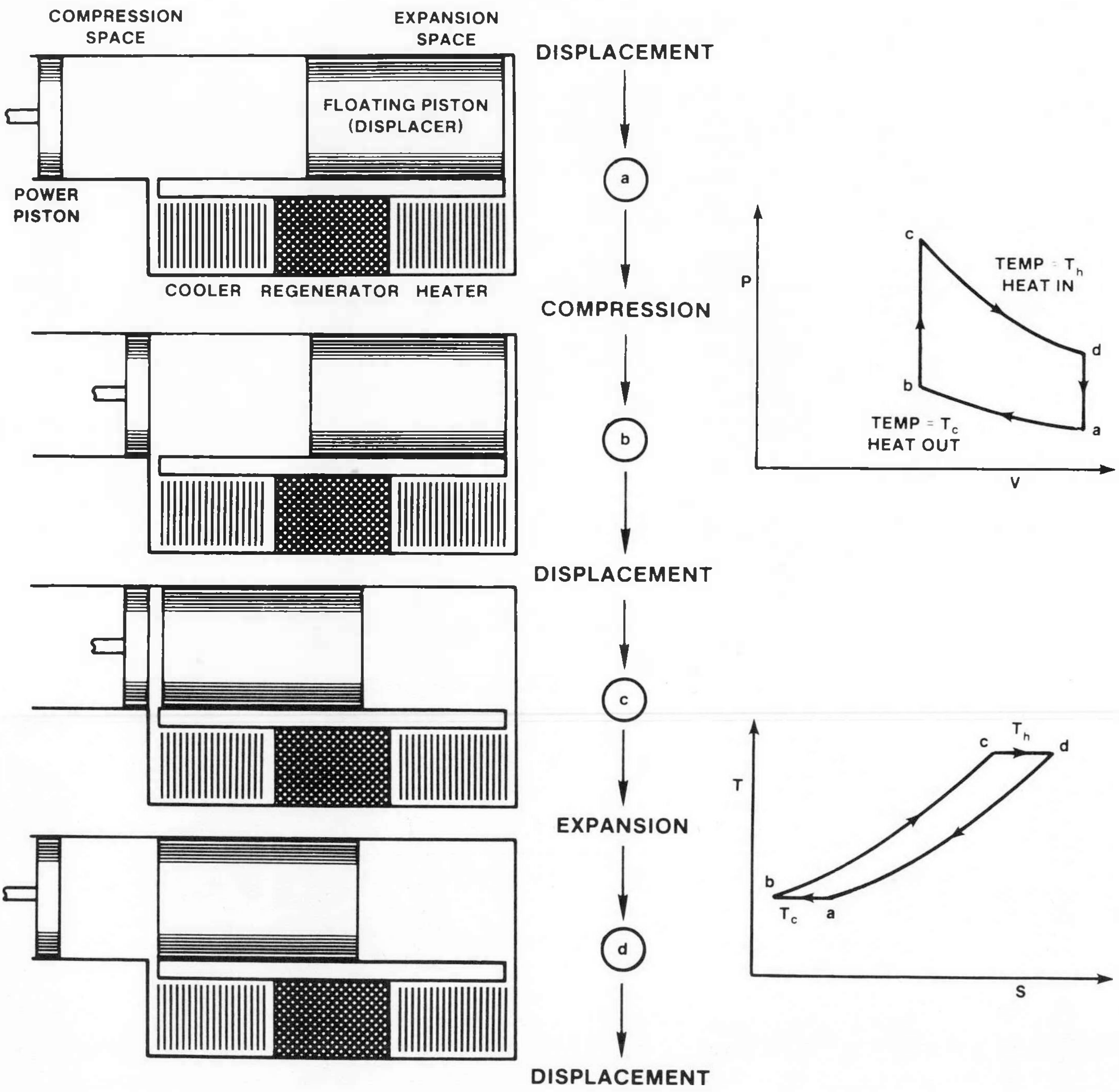

WHY
STIRLING THERMAL MOTORS KINEMATIC STIRLING FOR DISTRIBUTED RECEIVER SYSTEMS

- Cycle efficiency, 40-45% @ 1800 rpm, 25 kWe
  40-45% @ 2800 rpm, 40 kWe
- Heat pipe input, flexibility of receiver design
- Pressurized crankcase, eliminates ΔP across rod seals
- Variable swashplate drive, compact control mechanism

STM4-120
IMPORTANT FEATURES AND PARAMETERS

Arrangement:	Four double-acting cylinders symmetrically arranged about a common axis. One heat exchanger assembly per cylinder.
Bore:	56 mm
Maximum Stroke:	48 mm
Overall Length:	635 mm
Cross-sectional Dimensions:	Largest cross section is 300 mm in diameter
Total Estimated Weight:	75 kg
Working Fluid:	Helium
Mean Cycle Pressure:	11 MPa
Heater Temperature:	800° C
Power Control:	Piston stroke variation by means of a variable swashplate with a maximum angle of 22°
Heat Transport:	Sodium heat pipe
Gas Containment:	Crankcase pressurized to mean cycle pressure and sealed with a rotating shaft seal
Oil Containment:	Reciprocating rod oil scrapers
Materials:	Iron-based CRM-6D, CG-27 heater tubes

STM 4-120 CROSS-SECTION

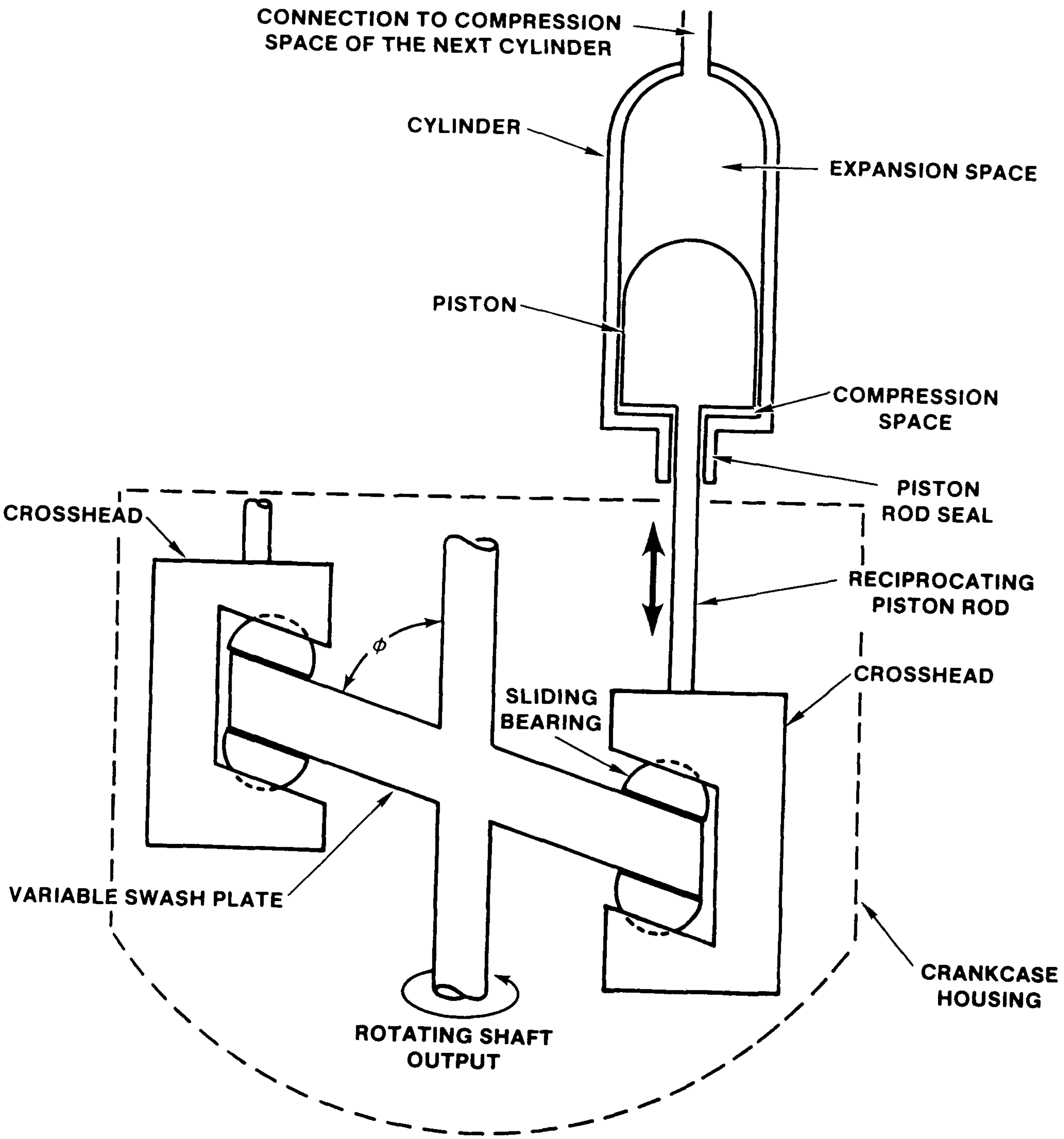

STM4-120 PERFORMANCE

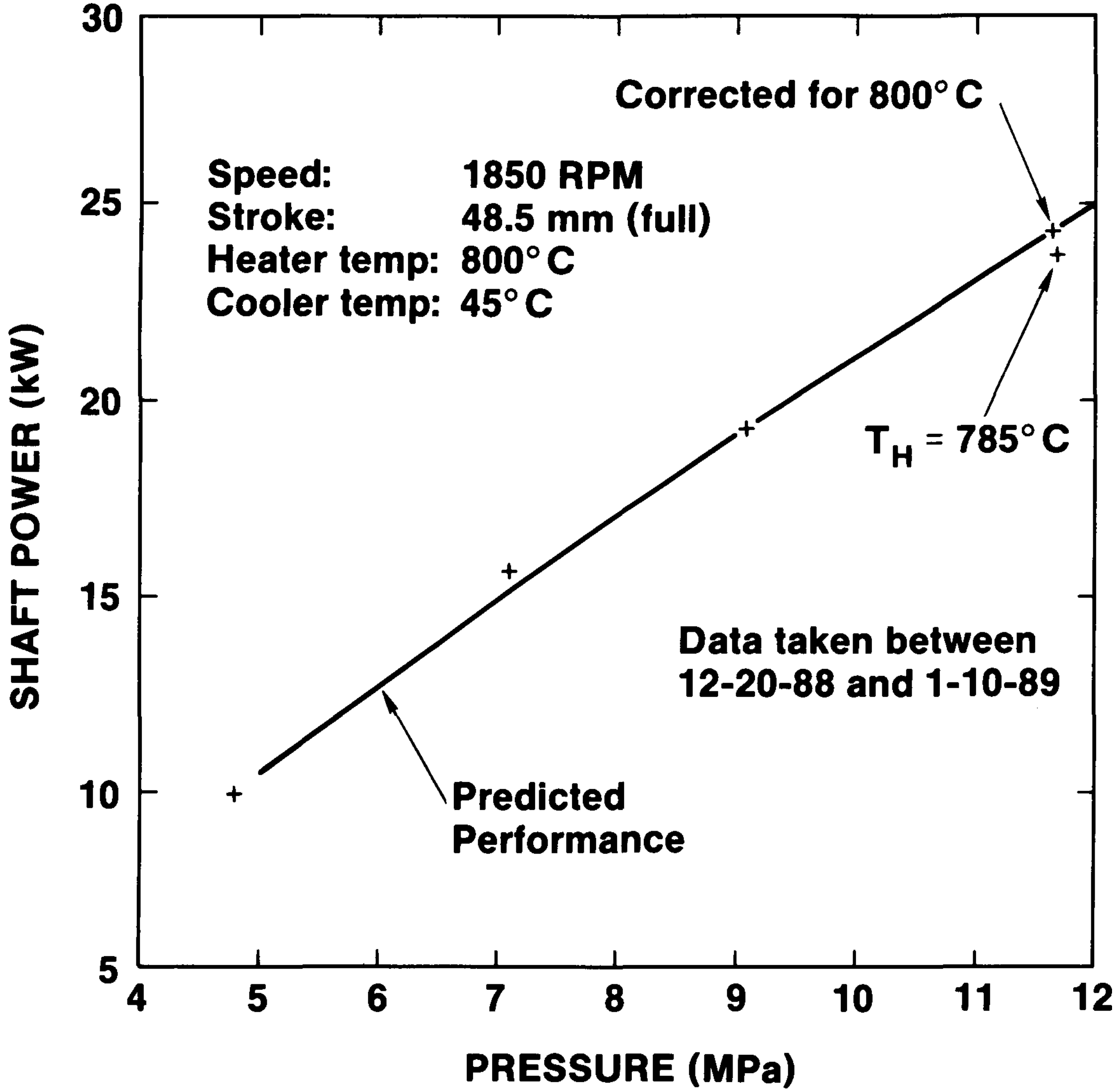

STM4-120 CONTROLS

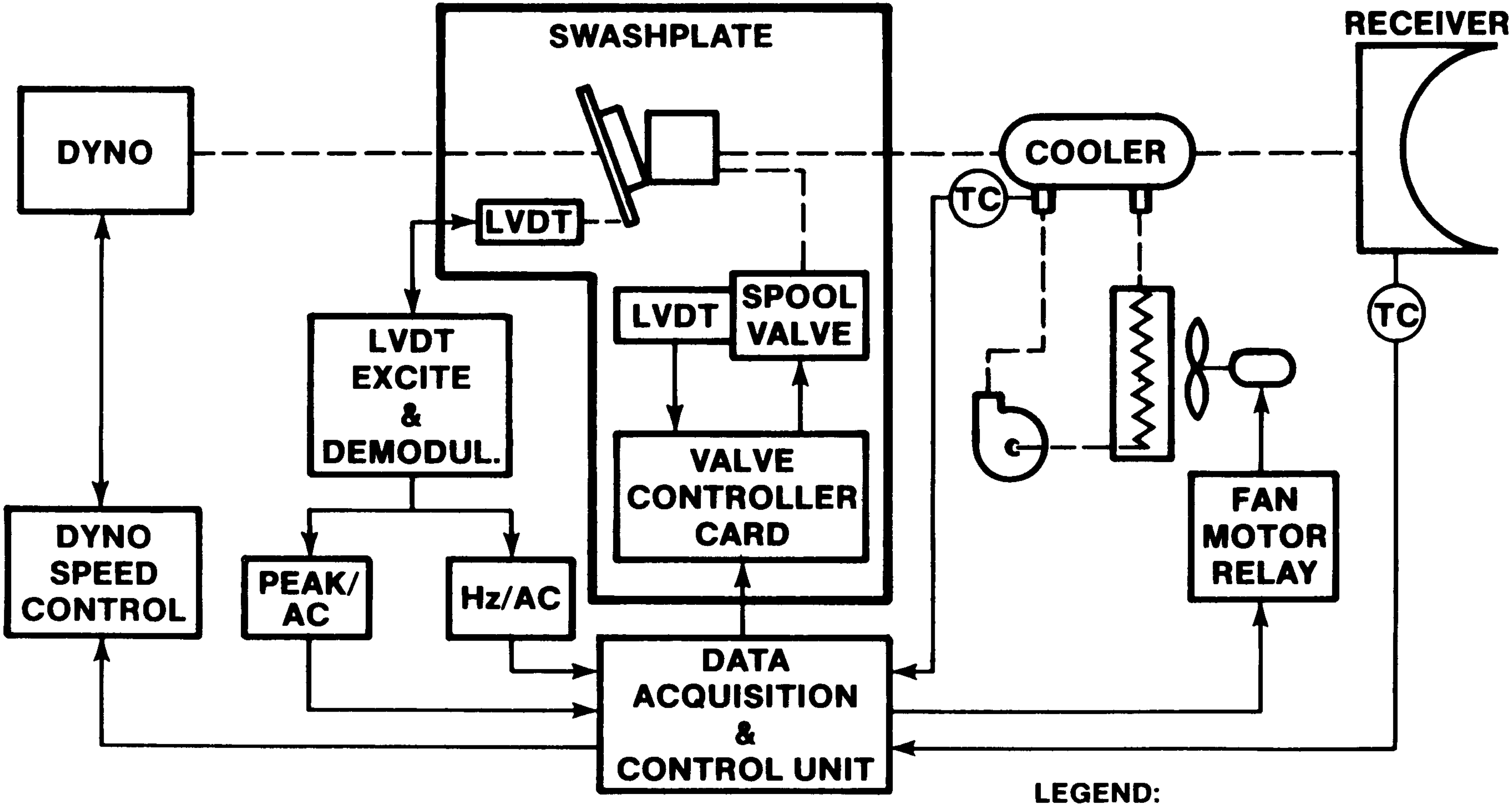

SWASHPLATE

RECEIVER

DYNO

LVDT

COOLER

TC

LVDT

SPOOL VALVE

TC

LVDT EXCITE & DEMODUL.

VALVE CONTROLLER CARD

FAN MOTOR RELAY

DYNO SPEED CONTROL

PEAK/ AC

Hz/AC

DATA ACQUISITION & CONTROL UNIT

LEGEND:

———	ELECTRICAL LINK
- - - -	MECHANICAL LINK
-(TC)	THERMOCOUPLE
▬▬	PROVIDED BY STM

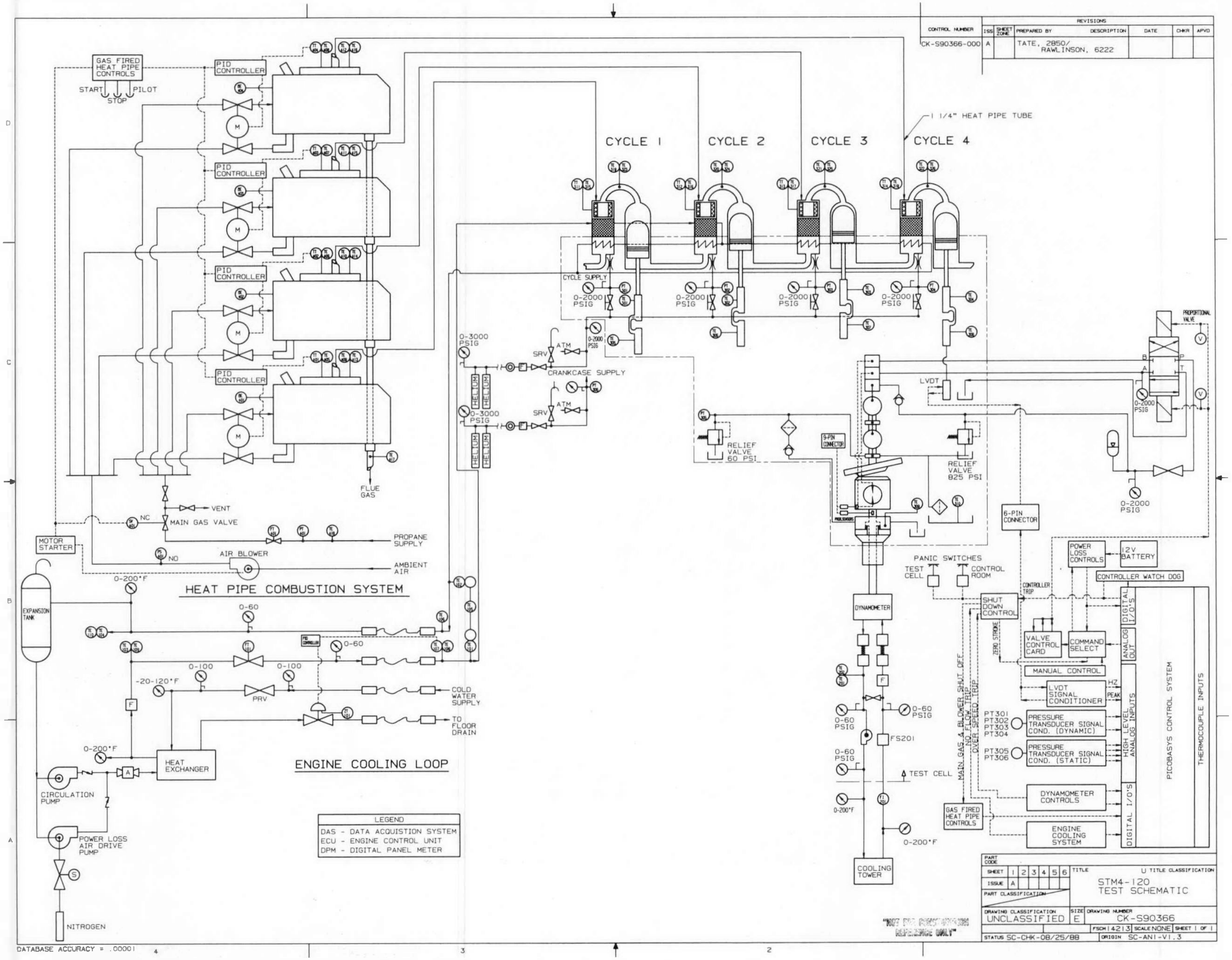

CONTROL NUMBER	ISS	SHEET ZONE	PREPARED BY DESCRIPTION	DATE	CHKR	APVD
CK-S90366-000	A		TATE, 2850/ RAWLINSON, 6222			

LEGEND
DAS - DATA ACQUISTION SYSTEM
ECU - ENGINE CONTROL UNIT
DPM - DIGITAL PANEL METER

PART CODE

SHEET	1	2	3	4	5	6
ISSUE	A					

PART CLASSIFICATION

TITLE U TITLE CLASSIFICATION
STM4-120
TEST SCHEMATIC

DRAWING CLASSIFICATION UNCLASSIFIED
SIZE E
DRAWING NUMBER CK-S90366
FSCM 14213 SCALE NONE SHEET 1 OF 1
STATUS SC-CHK-08/25/88
ORIGIN SC-AN1-V1.3

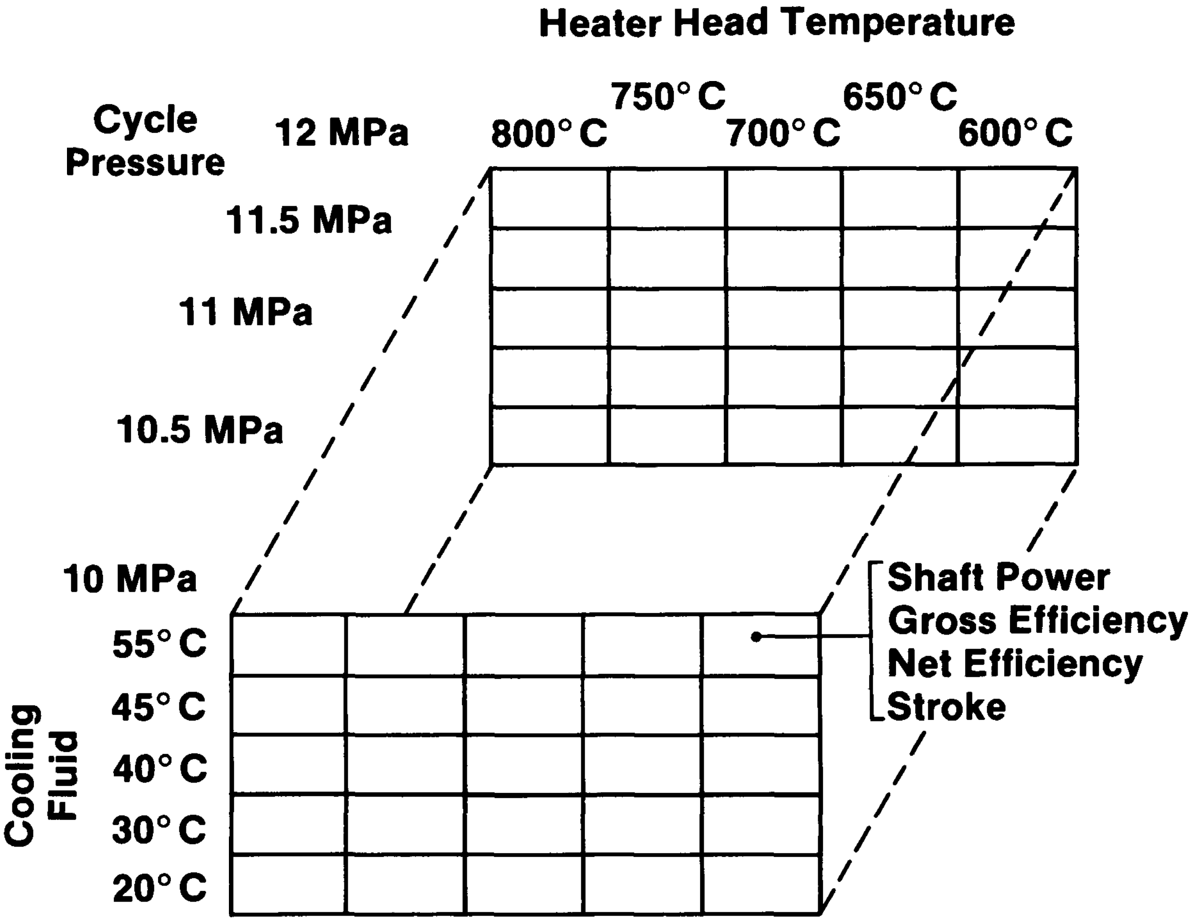
Heater Head Temperature
800° C
750° C
700° C
650° C
600° C
Cycle Pressure
12 MPa
11.5 MPa
11 MPa
10.5 MPa
10 MPa
Cooling Fluid
55° C
45° C
40° C
30° C
20° C
Shaft Power
Gross Efficiency
Net Efficiency
Stroke

STM4-120 STIRLING ENGINE HYBRID REFLUX HEAT-PIPE RECEIVER POWER CONVERSION MODULE

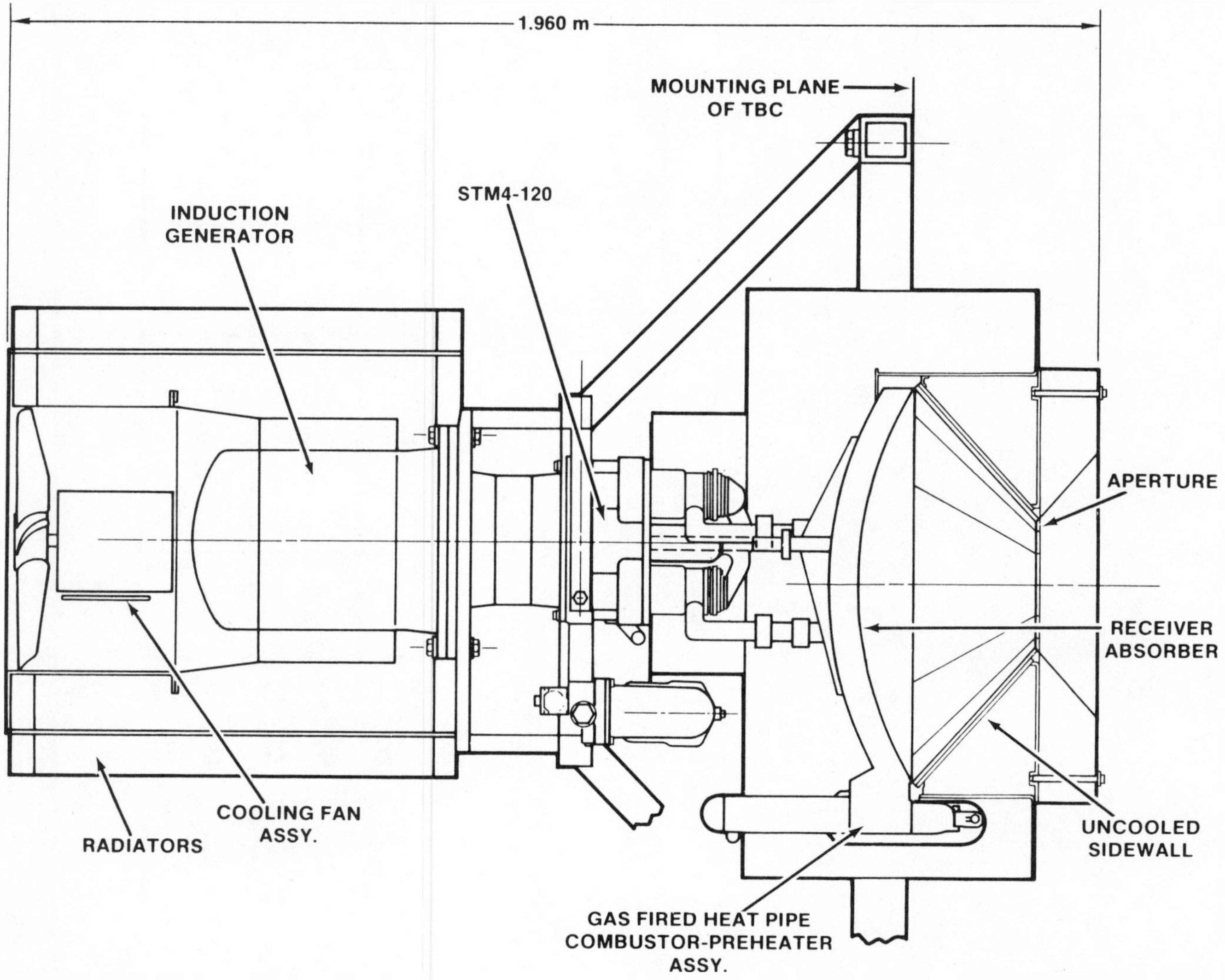

STATUS OF DOE/NASA
ADVANCED STIRLING CONVERSION SYSTEMS (ASCS)
PROGRAM

Richard K. Shaltens
NASA-Lewis Research Center
Cleveland, Ohio 44135

ABSTRACT

The Department of Energy's (DOE) Solar Thermal Technology Program, Sandia National Lab. (SNLA) is evaluating heat engines for terrestrial Solar Distributed Heat Receivers. The Stirling engine has been identified by SNLA as one of the most promising engines for terrestrial applications. The potential to meet DOE's goals for performance and cost can be met by the free-piston Stirling engine.

The NASA Lewis Research Center (LeRC) is conducting Stirling activities which are directed toward a dynamic power source for the space application. Space power systems requirements include high reliability, very long life, low vibration and high efficiency. The free-piston Stirling engine has the potential for future high power space conversion systems, either nuclear or solar powered. Although both applications, terrestrial and space power, appear to be quite different, their requirements complement each other.

NASA LeRC is providing management for an Advanced Stirling Conversion System (ASCS) Project through a cooperative Interagency Agreement with DOE. Parallel contracts were completed in 1987 by Mechanical Technology Inc. (MTI) of Latham, NY and Stirling Technology Company (STC) of Richland, WA for the conceptual designs of an ASCS. Each design featured a free-piston Stirling engine, a liquid metal heat pipe receiver, and a means to provide about 25 kW of electric power to a utility grid while meeting DOE's long term performance and cost goals.

The MTI design incorporates a linear alternator to directly convert the solar energy to electricity while STC generates electrical power indirectly by using a hydraulic output to a ground based hydraulic pump/motor coupled to a rotating alternator. Both designs for the ASCS's will use technology which can reasonably be expected to be available in the late 1980's. Pioneer Engineering and Manufacturing Company of Warren, MI completed an "independent" assessment of both the MTI and STC conceptual designs. The Pioneer assessment showed that both designs are manufacturable and have the potential to easily meet DOE's cost goals. Features of the ASCS designs using a free-piston Stirling engine, a liquid metal heat transport system, a receiver and the methods of providing electricity to the utility grid will be reviewed.

A follow-on effort to complete the ASCS design, fabricate, assemble, test with delivery of a complete system to SNLA was initiated in early 1988. Involvement with manufacturers (with cost sharing) was requested to enhance the free-piston Stirling technology and subsequent commercialization of the ASCS. In early 1989 multiple contracts were awarded to Cummins Engine Co., of Columbus, IN (free-piston with linear alternator) and Stirling Technology Co. of Richland, WA (free-piston with hydraulic output) to complete the preliminary design (PD) of each ASCS. A Failure Modes and Effect Analysis (FMEA) will be used to identify critical items with their failure modes during the PD effort. One of the PD's will be selected for the final design, hardware procurement, assembly and test of the ASCS at the SNLA test facilities in Albuquerque, NM in 1991.

ADVANCED STIRLING CONVERSION SYSTEM (ASCS)

- DOE STUDIES HAVE INDICATED STIRLING ENGINES AS A LEADING HEAT ENGINE CANDIDATE FOR DISH-ELECTRIC SYSTEMS
- STIRLING ENGINES COUPLED WITH HEAT-PIPE RECEIVERS HAVE THE POTENTIAL TO MEET DOE'S LONG TERM GOALS:
  - PERFORMANCE (HIGH EFFICIENCY & POWER)
  - MANUFACTURABILITY WITH COST
  - LIFE AND RELIABILITY
- IAA WITH DOE-SNLA
- FREE-PISTON STIRLING ENGINE FOCUS OF SYSTEM DESIGNS

RKS89-001.2

ASC SYSTEM INCLUDES:

- RECEIVER
- HEAT TRANSPORT SYSTEM
- CONVERSION SYSTEM
  - STIRLING ENGINE
  - POWER OUTPUT DEVICE
- POWER CONDITIONING AND CONTROLS
- AUXILIARIES

RKS89-001.3

ASCS DESIGN REQUIREMENTS

- **POWER OUTPUT - 25 kWe**
  120V, 1 PHASE, 60Hz or 240V, 3 PHASE, 60 Hz
- **SYSTEM EFFICIENCY (RECEIVER INPUT TO ELECTRIC OUT) >33%**
- **DOE COST (1984 $) GOALS**
  RECEIVER - < $40/m^2
  ENGINE/ALTERNATOR - < $300/kW
  ASCS - < $452/kWe
- **DESIGN LIFE - 30 YR (60,000 HR) WITH MAJOR OVERHAUL AT 20 YRS (40,000 HR)**
- **CONTROLS - FULLY AUTOMATIC, UNATTENDED OPERATION**
- **UTILIZE EXISTING TECHNOLOGY**

RKS89-001.12

HIGHLIGHTS OF ASCS CONCEPTUAL DESIGNS

- **BASE LINE CONCEPTUAL DESIGNS COMPLETED SEPT. 1987**
  - MTI: HEAT PIPE RECEIVER INTEGRATED WITH A FREE-PISTON STIRLING CONVERSION SYSTEM (LINEAR ALTERNATOR).
  - STC: REFLUX BOILER RECEIVER INTEGRATED WITH A FREE-PISTON STIRLING CONVERSION SYSTEM (HYDRAULIC OUTPUT TO A ROTARY ALTERNATOR).
- **PIONEER ENGR. & MFG. CO. EVALUATED THE MTI & STC CONCEPTUAL DESIGNS AND CONCLUDED BOTH ASCS'S:**
  - ARE MANUFACTURABLE AND
  - CAN MEET DOE'S LONG TERM COST GOALS

RKS89-001.4

MTI'S SINGLE-PISTON STIRLING ENGINE CONFIGURATION - SEPT '87

• HEAT SUPPLIED (kWth)	75.0
• ELECT POWER (kWe)	23.2
• EFFICIENCY (SOLAR TO ELECTRIC)	30.9%
• RECEIVER/LIQUID METAL	HEAT PIPE/Na
• HEATER HEAD TEMPERATURE (K/C)	975/700
• COOLER TEMPERATURE (K/C)	333/60
• RATIO (Th/Tc)	2.9
• ENGINE FREQUENCY (Hz)	60
• WORKING FLUID	He
• PRESSURE (MPa)	10.5
• POWER OUTPUT LINEAR ALTERNATOR	240 V, 1ϕ, 60Hz
• ANNUAL POWER (est) (kW/hrs)	59,200
• ANNUAL EFFICIENCY	28.8%
• WEIGHT ON TBC (est) (Lbs/kG)	1500/680
• ASCS COSTS (PARETO est) ('84$)	$8429 ($363/kW)

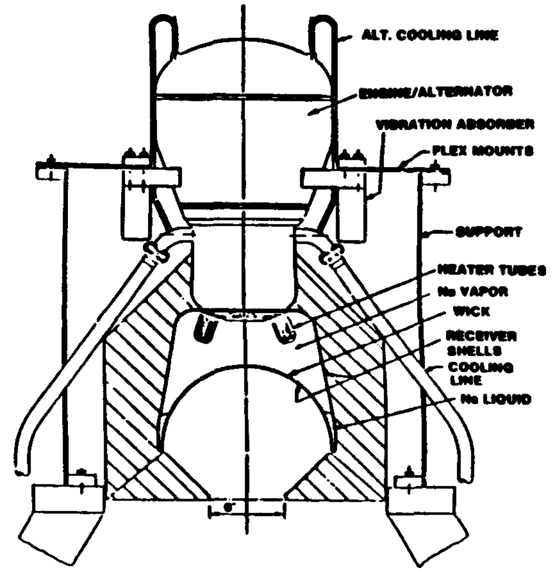

RKS87-003.17

MTI HEAT PIPE RECEIVER CONCEPTUAL DESIGN

SANDERS ASSOCIATES - SOLAR RECEIVER
THERMACORE - HEAT TRANSPOR SYSTEM

RECEIVER LOSS MECHANISMS @ 700°C

(% OF 75 kWth INPUT)

SHELL INSULATION	1.0
CAVITY RERADIATION	2.5
DISH SHADING	0.7
TRANSIENT STARTUP	0.7
CAVITY REFLECTION	2.3
CAVITY CONVECTION VERTICAL	1.0
RECEIVER NET EFF. VERTICAL	91.8%

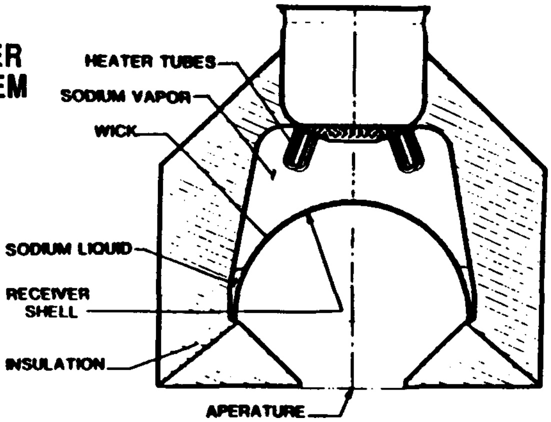

LIQUID METAL	**SODIUM**
OPERATING TEMP.	**700 C**
ESTIMATED COST 84$	**$727**

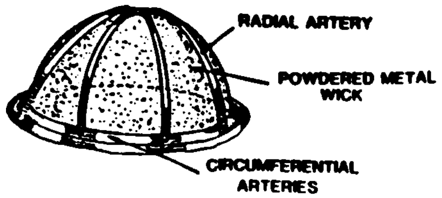

GOOD APPROACH. HOWEVER, REQUIRES DEVELOPMENT.

RKS87-001.5

STC STIRLING ENGINE WITH HYDRAULIC OUTPUT - SEPT '87
(STAND ALONE)

• HEAT SUPPLIED (kWth)	75
• ELECT POWER (kWe)	25.2
• EFFICIENCY (SOLAR TO ELECTRIC)	33.6%
• RECEIVER / LIQUID METAL	REFLUX BOILER/K
• HEATER HEAD TEMPERATURE (K/C)	973/700
• COOLER TEMPERATURE (K/C)	323/50
• RATIO (Th / Tc)	3.0
• ENGINE FREQUENCY (Hz)	46
• WORKING FLUID	He w/FREON BUFFER
• PRESSURE (MPa)	17.9
• POWER OUTPUT: HYDRAULIC PUMP WITH INDUCTION GENERATOR	240 V,3Φ, 60Hz
• ANNUAL POWER (est) (kW/hr)	65,200
• ANNUALIZED EFFICIENCY	31.8%
• WEIGHT ON TBC (est) (Lbs/kG)	1914/869
• ASCS COSTS (PARETO est) ('84$)	$7670 ($304/kW)

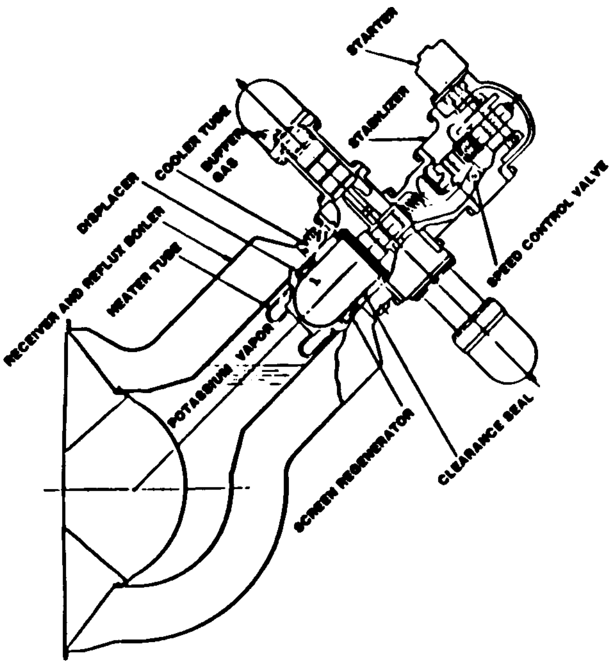

RKS87-003.19

STC REFLUX BOILER RECEIVER CONCEPTUAL DESIGN

SANDERS ASSOC.-SOLAR RECEIVER
SAASKE ASSOC.-HEAT TRANSPORT SYSTEM

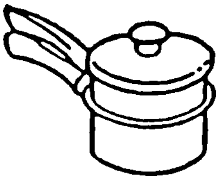

RECEIVER LOSS MECHANISMS @ 700°C
(% OF 75 kWth INPUT)

SHELL INSULATION	1.0
CAVITY RERADIATION	2.6
DISH SHADING	0.7
TRANSIENT STARTUP	2.0
CAVITY REFLECTION	2.3
CAVITY CONVECTION VERTICAL	1.0
RECEIVER NET EFF VERTICAL	90.4%

LIQUID METAL	**POTASSIUM**
OPERATING TEMP	**700 C**
ESTIMATED COST 84$	**$ 155**

SIMPLE REFLUX BOILER, INEXPENSIVE, RUGGED

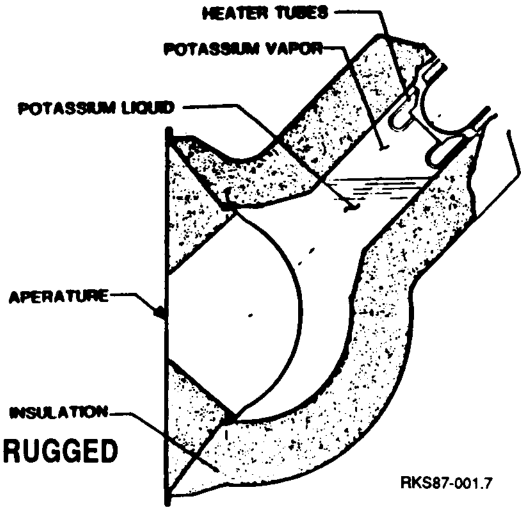

RKS87-001.7

COMPARISON OF ANNUAL ASCS ENERGY PROJECTIONS

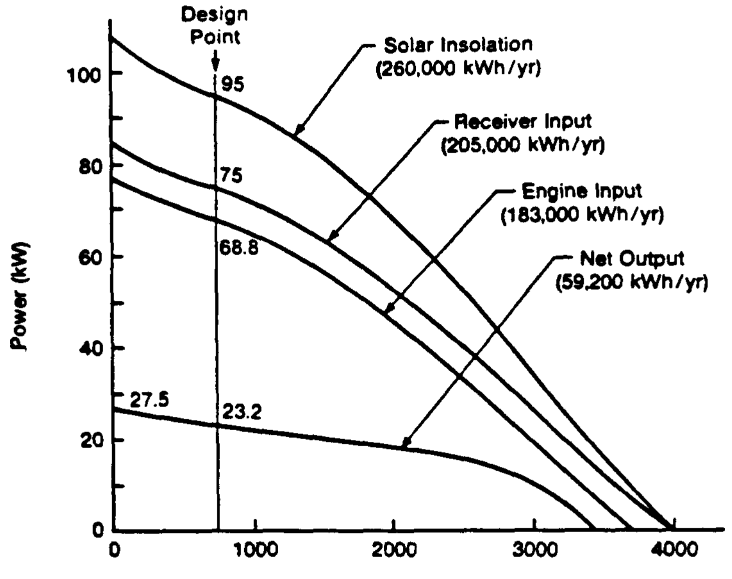

(a) MTI'S FREE-PISTON STIRLING WITH LINER ALTERNATOR

RKS89-001.14

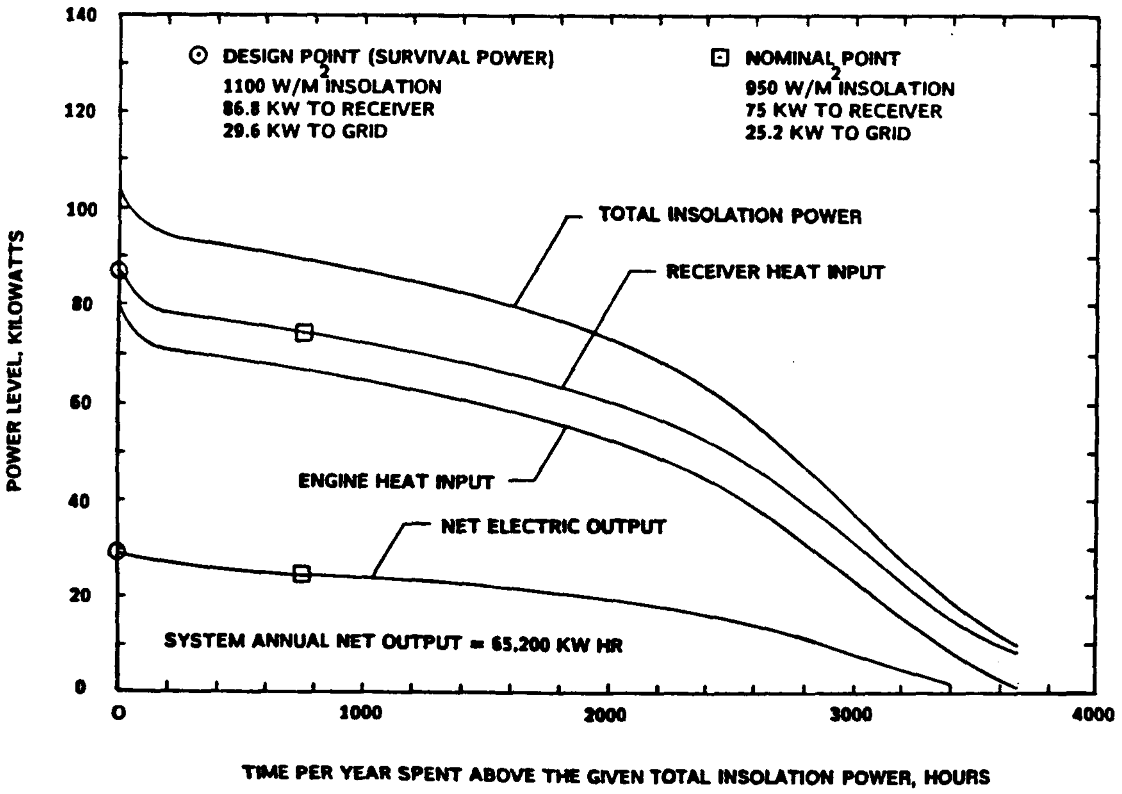

(b) STC'S STIRLING WITH HYDRAULIC OUTPUT

RKS89-001.15

DOE COST GOALS *

(1984 $)

	CURRENT TECHNOLOGY	LONG TERM GOALS
RECEIVER	70/m^2	40/m^2
CONVERSION	380/kWe	300/kWe
ASCS GOALS (RECEIVER & CONVERSION)	646/kWe	452/kWe

* SOURCE: DOE/SNLA 5 YEAR PLAN

RKS87-003.36

COMPARISON OF ASCS BASELINE PROJECTED COSTS

(1984 $)

	MTI	STC
RECEIVER	727.05	155.44
STIRLING ENGINE	4843.14	3268.66
POWER GENERATION	1303.90	3323.32*
POWER CONDITIONING	541.63	——
AUXILIARIES	1013.77*	1014.25*
TOTAL	$ 8429.49	$ 7670.67
	$ 363/kW	$304/kW

* COMMERCIAL EQUIPMENT

SOURCE: FINAL PIONEER REPORT REC'D DEC. 18, 1987

RKS87-003.24
REV. JAN. 4, 88

ASCS FOLLOW-ON STATUS

- PROCUREMENT COMPLETED BY NASA LeRC FOR PRELIMINARY DESIGN, FINAL DESIGN, HARDWARE PROCUREMENT, ASSEMBLY AND TESTING OF A STAND-ALONE ASCS.
- MULTIPLE CONTRACTS AWARDED THROUGH THE PRELIMINARY DESIGN TASK. ONE FREE-PISTON STIRLING CONVERSION SYSTEM WILL BE SELECTED FOR THE OPTIONAL TASKS.
- OPTIONAL TASKS WILL INCLUDE:
  - FINAL DESIGN, FABRICATION, ASSEMBLY, C/O AND DELIVERY OF ASCS TO SANDIA.
  - FIELD SUPPORT FOR THE ASCS AT SANDIA.
  - UP TO 4 ADDITIONAL ASCSs TO BE OPERATED AND EVALUATED WITH UTILITIES.
- DESIGN FEATURES FREE-PISTON STIRLING ENGINE AND THE USE OF "EXISTING" TECHNOLOGY WITH A FOCUS ON MANUFACTURABILITY WILL BE EMPHASIZED THROUGHOUT THIS EFFORT.

RKS89-001.6

ASCS FOLLOW-ON PROGRAM

APPROACH:

- COST SHARED, COMPETITIVE PROCUREMENT
  - USE EXISTING TECHNOLOGY
  - FOCUS ON FREE-PISTON STIRLING WITH LINEAR ALTERNATOR AND HYDRAULIC DRIVE
  - UTILIZE REFLUX BOILER RECEIVER (BASELINE)
  - MULTIPLE CONTRACTS THROUGH PRELIMINARY DESIGN
- FULL SYSTEM TEST ON SANDIA CONCENTRATOR
- POSSIBLE FUTURE IN-SERVICE LIFE DEMONSTRATIONS WITH UTILITY COMPANIES OPERATING ON GRID

RKS89-001.8

ASCS PRELIMINARY DESIGN CONTRACTS

- **PARALLEL CONTRACTS AWARDED**
  - FEB'89 WITH CEC AND STC
- **CUMMINS ENGINE COMPANY (CEC), COLUMBUS, INDIANA**
  - STIRLING W/LINEAR ALTERNATOR
- **STIRLING TECHNOLOGY COMPANY (STC), RICHLAND, WASHINGTON**
  - STIRLING W/HYDRAULIC OUTPUT

ASCS CONTRACTOR TEAMS

CEC	PRIME	STC
SANDERS ASSOC.	SOLAR RECEIVER	SANDERS ASSOC.
THERMACORE	HEAT TRANSPORT SYS.	THERMACORE SAASKI ASSOC.
SUNPOWER INC.	CONVERSION SYS.	STC GEDEON ASSOC.
CEC/SUNPOWER	ANALYSIS	STC/GEDEON
McCORD	AUXS	STC
CEL	CTLS/PWR COND.	WESTINGHOUSE
CEC	FMEA	WESTINGHOUSE
CEC	MANUFACTURABILITY	WESTINGHOUSE

RKS89-001.10

ASCS FOLLOW-ON SCHEDULE

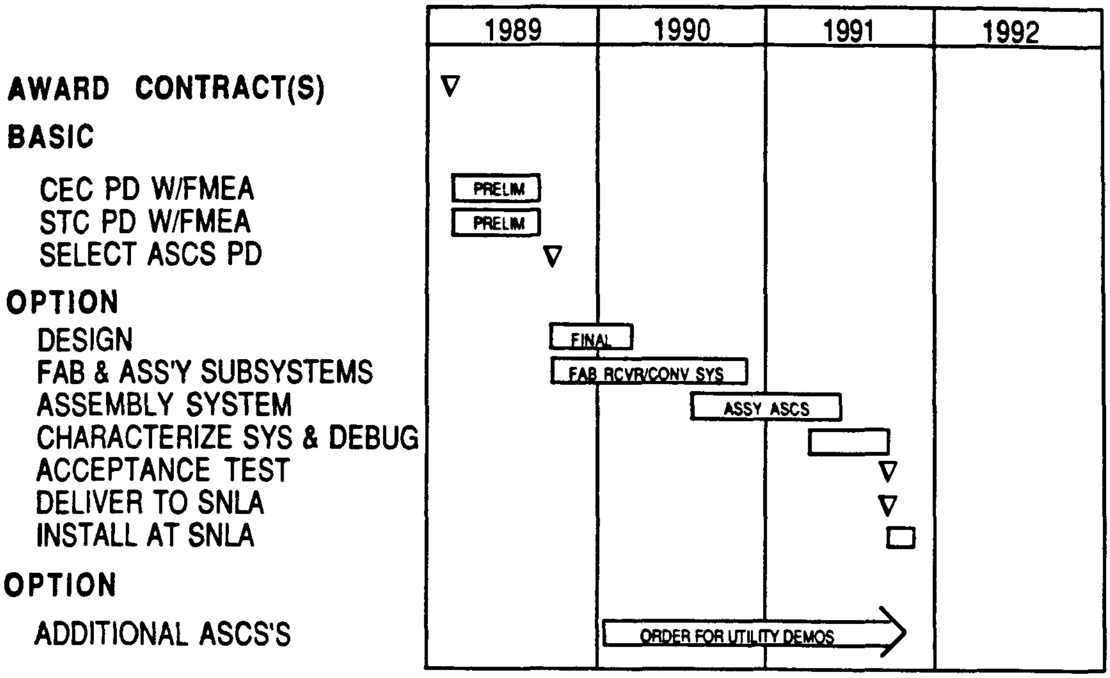

RKS89-001.13
REV. FEB'89

ABSTRACT

Fluid and Thermal Behavior of the Direct Absorption Receiver

Mark S. Bohn
Solar Energy Research Institute
Golden, Colorado

Direct absorption of solar flux in a falling film of molten salt is the basis for a promising new solar thermal central receiver technology. Elimination of the tubes used in state-of-the-art receivers leads to several potential advantages including simpler design, lower capital and operating costs, increased reliability and higher operating efficiency. As with any new technology, however, there are several issues which must be addressed before the concept can be successfully implemented. In this presentation, research on droplet ejection from wavy salt films and thermocapillary breakdown of salt films exposed to high flux will be covered.

A liquid film which is allowed to flow for more than 1 or 2 meters will develop what are known as roll waves. These waves are lumps of fluid separated by about 10 cm, moving at 3 to 4 m/s down the film and growing in height with increasing flow length. Because of this tendency for roll wave growth, the possibility exists for the waves to grow enough to break and eject droplets. In this study, wave growth and droplet ejection were measured for a 5 m long molten salt film under flow conditions typical for a commercial direct absorption receiver. Results show the waves begin to grow significantly in the 2 to 3 meter flow length range and that this is also where the first significant droplet ejection is seen. The rate of mass ejected from the film increases exponentially in the range from 1 to 4 meters of flow length up to about 1 gm/hr for the 0.27 m wide test panel. In addition, a very fine mist of salt is ejected from the entire film surface, apparently due to bursting of turbulent eddies in the film.

Thermocapillary breakdown of liquid films refers to rupture of the film due to surface tension gradients. Most liquids, molten salt included, exhibit a decreasing surface tension with increasing temperature. This means that if a local region of high temperature is created on the film surface (either by a local gradient in the flux or by a ripple in the film surface) surface tension will be reduced there and a surface shear will pull fluid away from the region. This local thinning will tend to further overheat the region leading to more thinning until a dry spot is formed. This phenomenon was studied with water and a mixture of glycerol and water flowing on the outside of a 2.54 cm od, 2.5 m long vertical heated pipe. In addition, a dimensionless scaling law was developed which allows data from different liquids to be compared on the same correlation plot. The experimental data covered a range of Reynolds number up to 6000 while a commercial receiver will operate in the range of 20000 to 70000. If the experimental data are extrapolated up to this higher Reynolds number range, it appears that a commercial direct absorption receiver operating with molten salt should be in the safe operating regime with regards to thermocapillary breakdown.

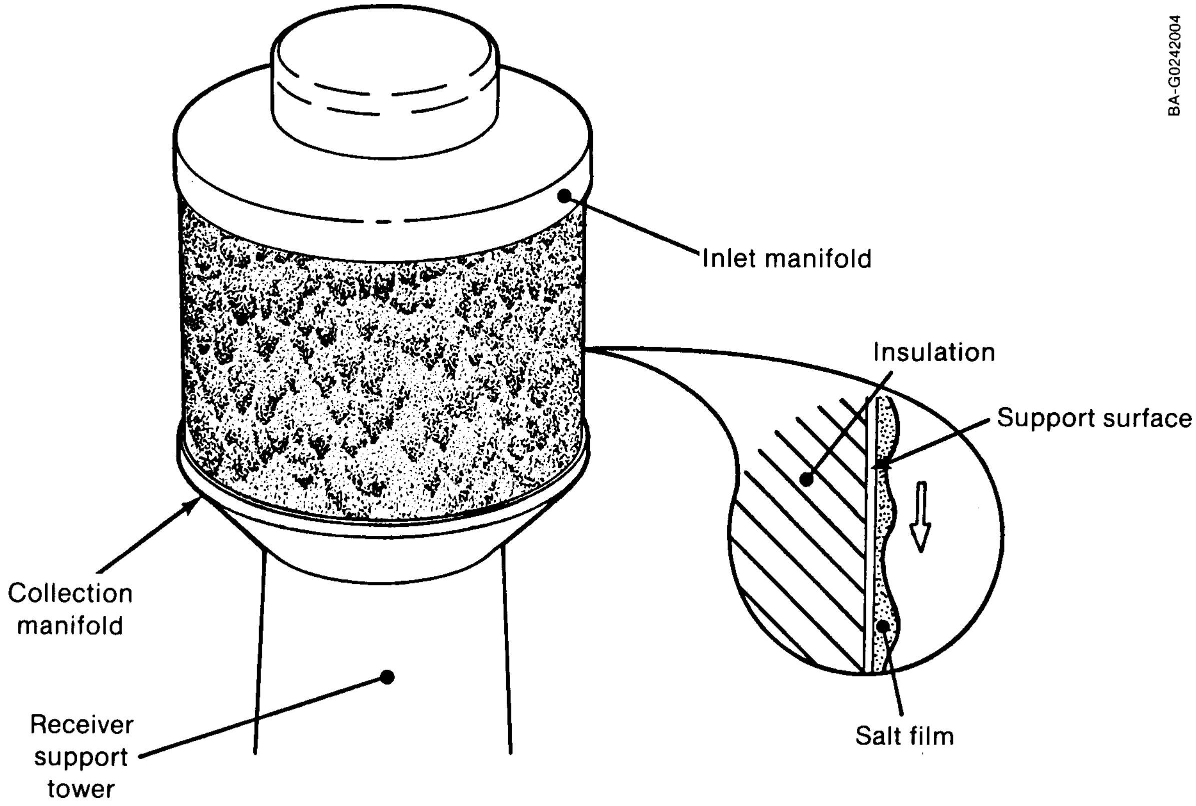

Molten Salt Direct Absorption Receiver

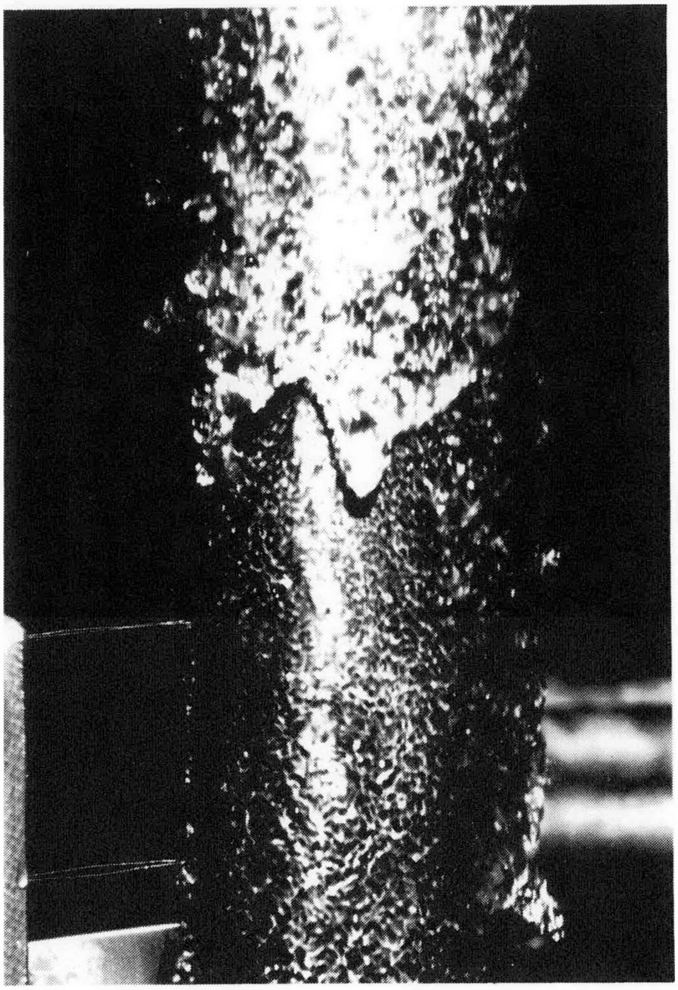

Drop Ejection from 4.5 m Long Vertical Water Film

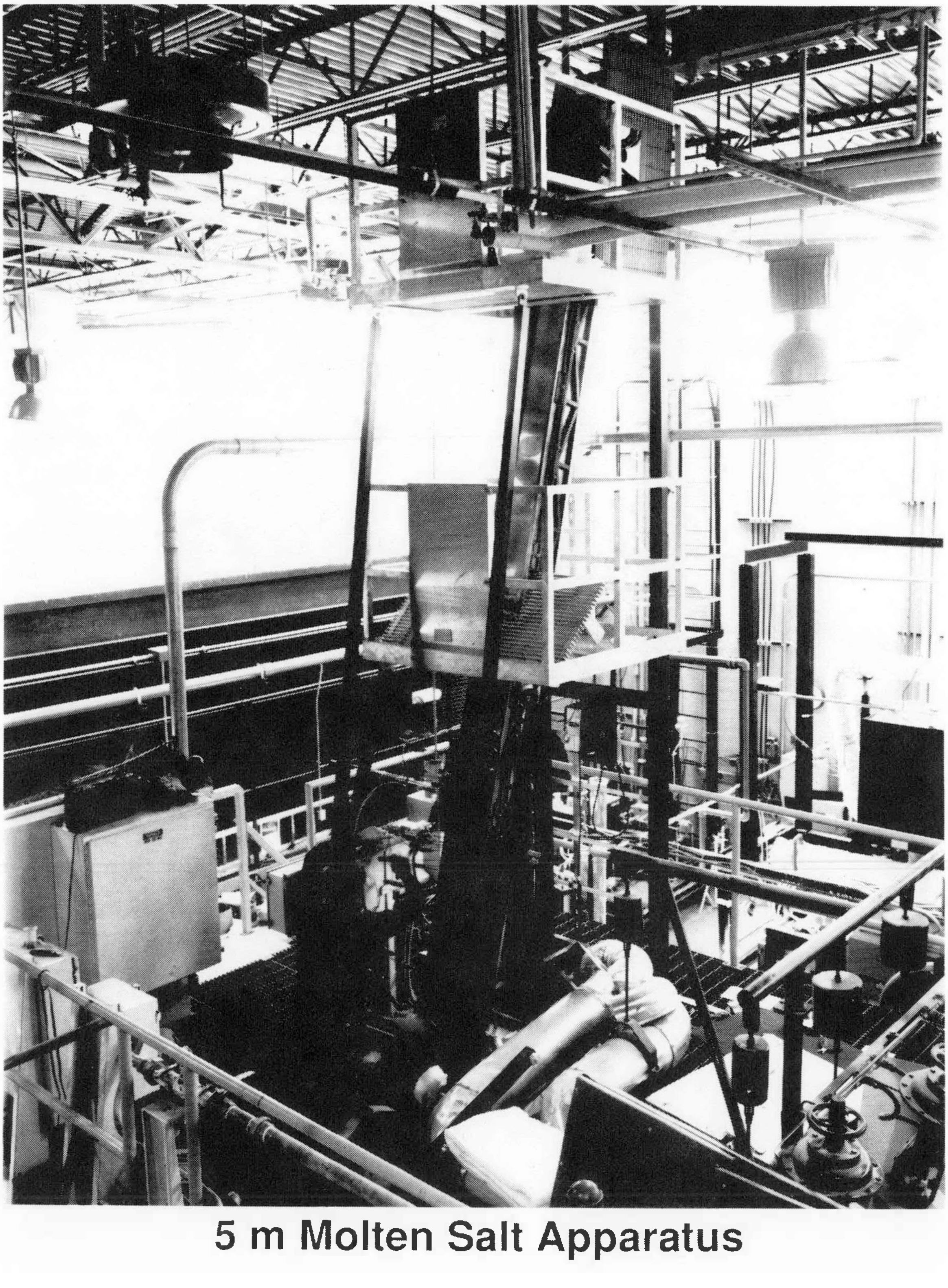

5 m Molten Salt Apparatus

Thickness of a Molten Salt Film
(113 l/m, 0.27 m wide)

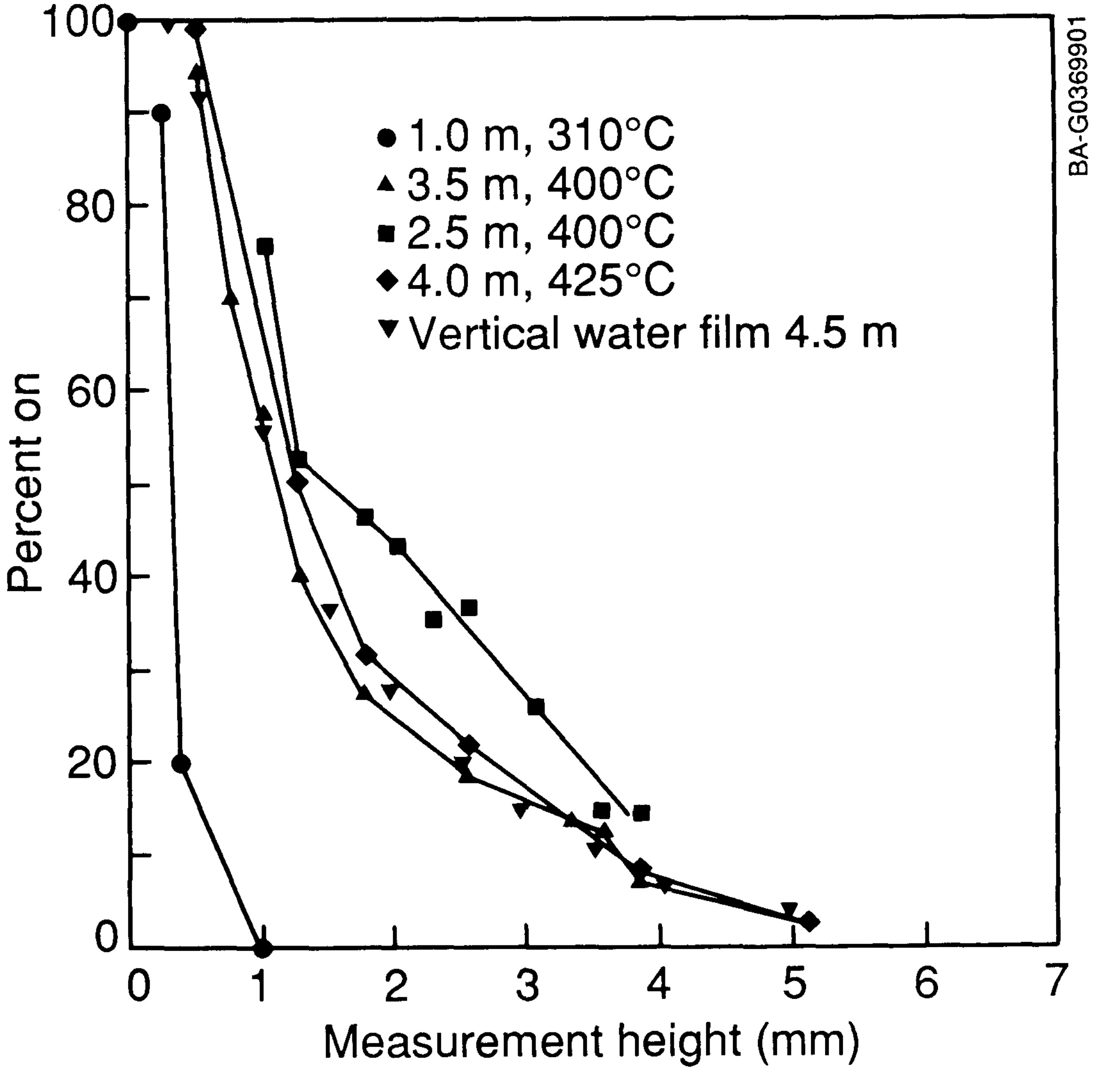

Drop Ejection from a Molten Salt Film (0.27 m width)

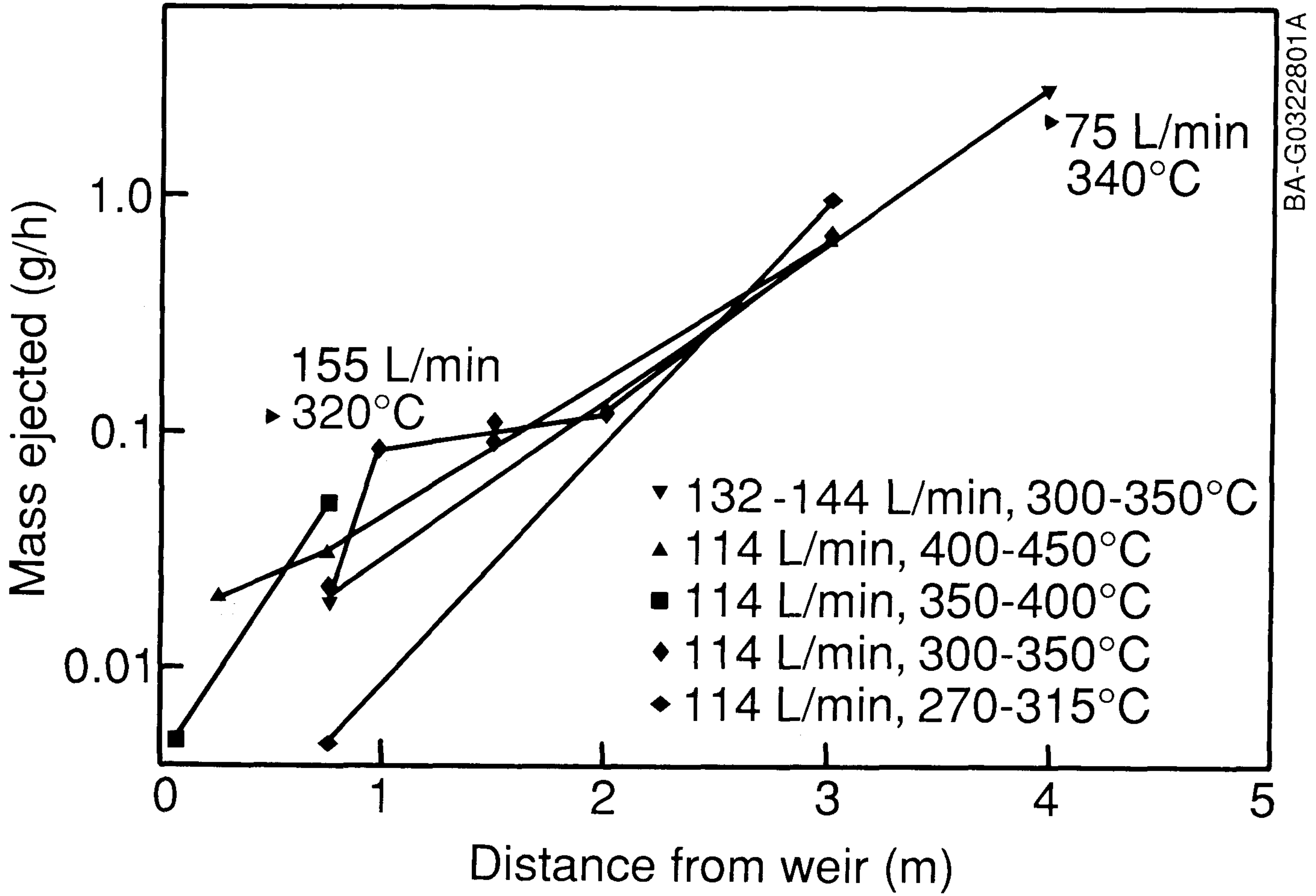

Initiation of Thermocapillary Breakdown

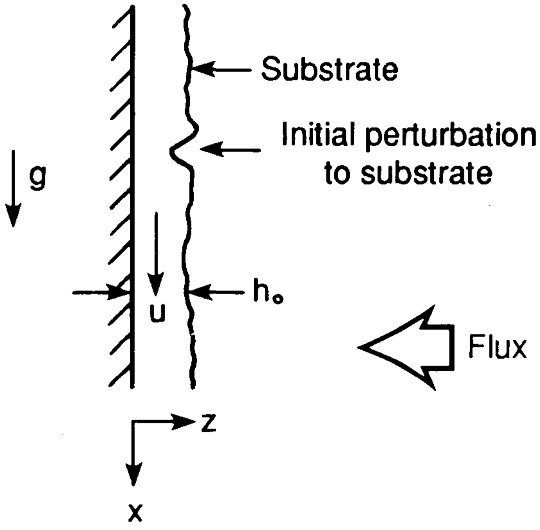

BA-G0384410A

Apparatus Used for Measuring Thermocapillary Breakdown Flux

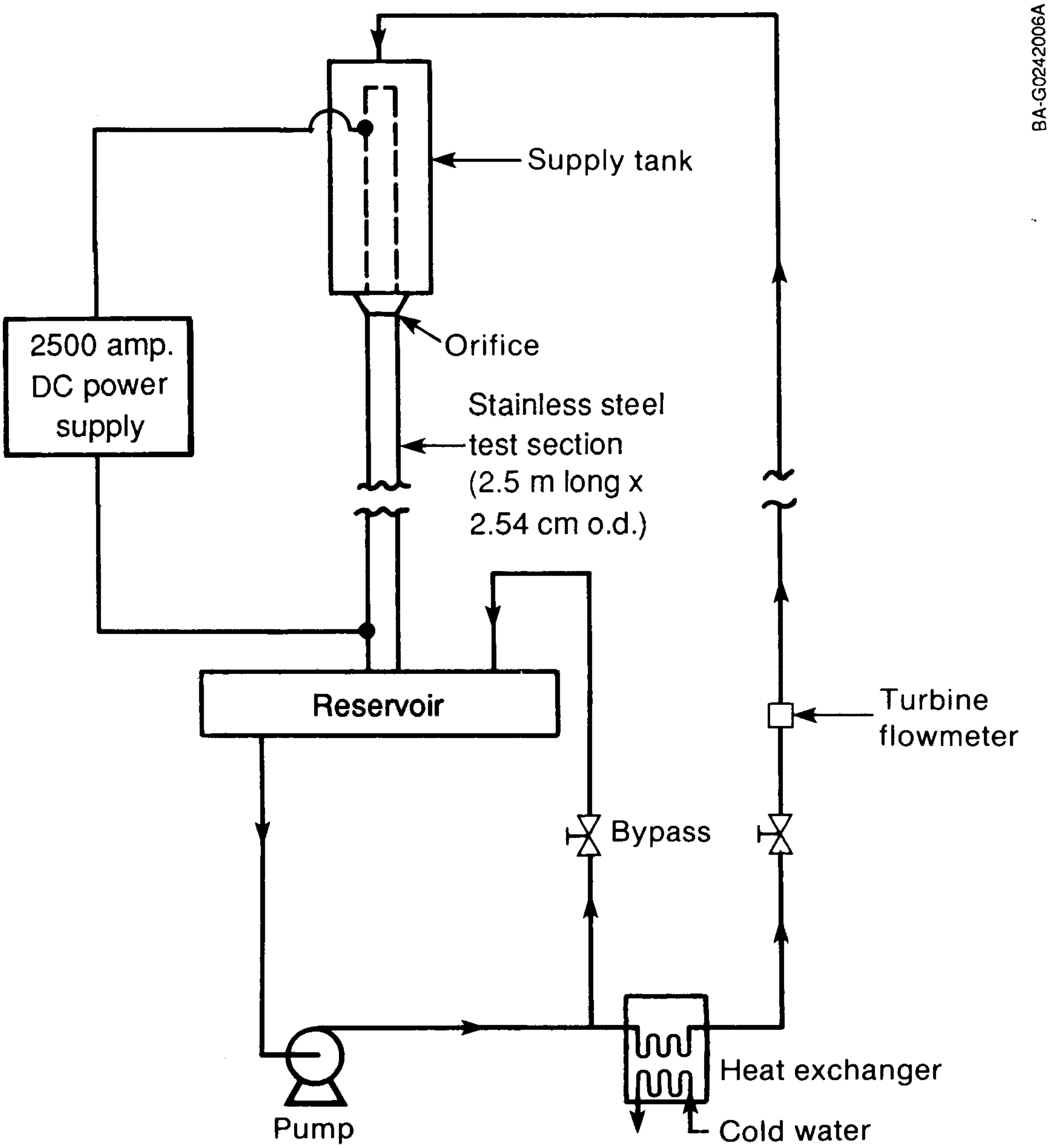

Thermocapillary Breakdown of Falling Liquid Films

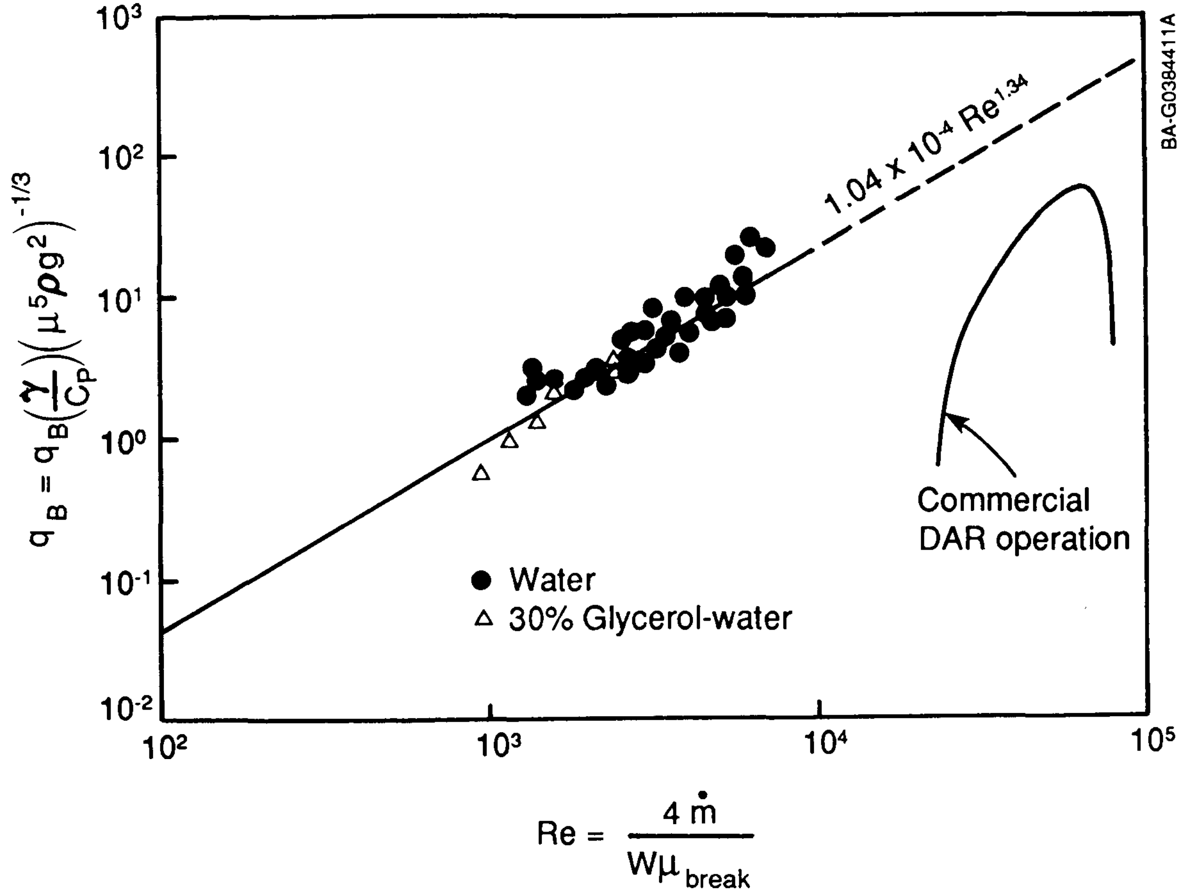

Conclusions

Drop Ejection

- initiation of drop ejection coincides with wave growth
- rate of ejection increase exponentially down the panel
- rate of ejection is very sensitive to panel deformations
- possible solutions
  - -intermediate manifold
  - -higher viscosity salts
  - -concave panel

Thermocapillary Breakdown

- data for water and water/glycerol
- limited Reynolds Number to 6,000
- suggests that commercial DAR should be safe
- data at higher Re needed

SESSION 2

NON-ELECTRIC
RESEARCH AND DEVELOPMENT
APPLICATIONS

ABSTRACT

OPPORTUNITIES FOR THE SOLAR PROCESSING OF TOXIC WASTES

Walter Short and John Thornton

The generation and disposal of toxic wastes is a long-standing and growing problem in the United States. Not only are we annually producing some 280 million tons of toxic materials in the United States today, but we are discovering that lack of proper regulation in the past has resulted in the contamination of our soil, water and air. This discovery has produced a growing public concern, a body of new regulations, a plethora of market opportunities, and an evolving set of treatment technologies.

Toxic waste problems range from the destruction of concentrated liquid wastes, to soils and groundwater contaminated by improper disposal of such wastes. Existing conventional methods for cleaning up or destroying these wastes vary with the type of chemical waste and the medium in which it is found. New regulations will require that many concentrated organic liquid wastes, formerly disposed of in landfills, will need to be incinerated at very high temperatures. Similarly, organic toxic wastes in sludges and soils can be destroyed by first desorbing the organics and then destroying them through high-temperature combustion.

Dilute toxic wastes are often found in municipal water supplies, industrial effluents, or groundwater underlying past storage ponds and industrial generators. The more common, conventional treatment methods for volatile organic compunds in water include air stripping and carbon adsorption. Unfortunately, these methods don't destroy the toxic compounds, but rather, simply transfer them from water into either atmosphere or a carbon bed.

In addition to its ability to provide heat for the thermal destruction of toxic wastes, concentrated solar energy can be used for photolytic and photocatalytic destruction processes that employ the high-energy photons of the solar spectrum and solar's radiant heating capability. Our investigation of hazardous waste markets has concentrated on identifying those waste problems that can take the best advantage of these unique solar attributes.

Two promising applications stand out for high-temperature solar destruction processes. One of these is the treatment of contaminated soils at Superfund sites located in the Southwest. A properly configured central receiver system may be able to thermally desorb the contaminating chlorinated hydrocarbons while simultaneously destroying the desorbed gases with the high-energy photons in the UV portion of the spectrum. Another strong market possibility is the on-site destruction of solvents such as trichloroethylene produced by small manufacturing firms. A parabolic dish employing a thermal-catalytic destruction process might allow small waste generators to avoid both liability concerns and the high fees charged by commercial disposal firms.

For the treatment of dilute wastes in water, we are concentrating initially on the destruction of trichloroethylene (TCE) in groundwater. TCE is probably the most common Superfund site contaminant in the Southwest. Furthermore, it is expected that the cost of conventional treatment processes such as carbon adsorption and air stripping will increase as additional regulations on landfilling and air pollution take effect.

OPPORTUNITIES FOR THE SOLAR PROCESSING OF TOXIC WASTES

1989 Annual R&D Review
Solar Thermal Technology Program
March 9, 1989

Walter Short
John Thornton
Solar Energy Research Institute

APPLICATIONS FOR SOLAR DETOX PROCESSING

HIGH FLUX/HIGH TEMPERATURE
- Liquids
- Soils
- Sludges
- Carbon regeneration

ORGANICS IN WATER
- Groundwater
- Municipal water supplies
- Industrial effluents

CRITERIA FOR MARKET SELECTION

1. POTENTIAL SOLAR ADVANTAGES
2. SIGNIFICANT ENERGY REQUIREMENTS
3. SOUTHWESTERN SITES
4. DEVELOPING LARGE MARKET
5. RESEARCH DOLLARS AVAILABLE

HIGH TEMPERATURE PRIORITY MARKETS

SOILS - Thermal desorption with
photolysis or photocatalysis

SMALL SOLVENT GENERATORS - Photocatalytic

WHY SOILS?

- POTENTIAL SOLAR ADVANTAGES
- GROWING LIST OF SUPERFUND SITES
- ENERGY INTENSE APPLICATION
- LIMITED ACCESS TO HIGH-BTU WASTES FOR BLENDING
- LACK OF PREEMINENT CONVENTIONAL TECHNOLOGY
- EPA INTEREST

POTENTIAL SOLAR ADVANTAGES FOR SOIL DETOX

- Direct soil irradiation
  - No combustion air
    - Less energy
    - Less air pollution equipment
  - Better heat transfer
    - Less energy for desorption

- Photolytic or photocatalytic destruction
  - Less combustion air
    - Less energy
    - Less air pollution equipment
  - Lower temperature
    - Less energy
  - Possibly fewer PICs

MOBILE INCINERATOR SYSTEM

COSTS

COST ELEMENT	1000'S OF 1983 DOLLARS	
CAPITAL COSTS		5100
Design and fabrication	2900	
Operating proc & training	200	
Shakedown	600	
Trial burn & permitting	1400	
OPERATING COSTS (116 days)	1895	
Feed prep & ash removal	670	
Management	221	
Operation labor	331	
Fuel	159	
Other	514	
OPERATING COSTS (one year)		5500
COST PER TON		1700

SOLAR WATER DETOX
MARKET OPPORTUNITIES

Types of Markets

Groundwater
Municipal water supplies
Industrial effluents

Types of Wastes

Chlorinated Hydrocarbons (e.g., TCE)
Industrial dyes
Pink water

NATIONAL PRIORITIES LIST SUPERFUND SITES

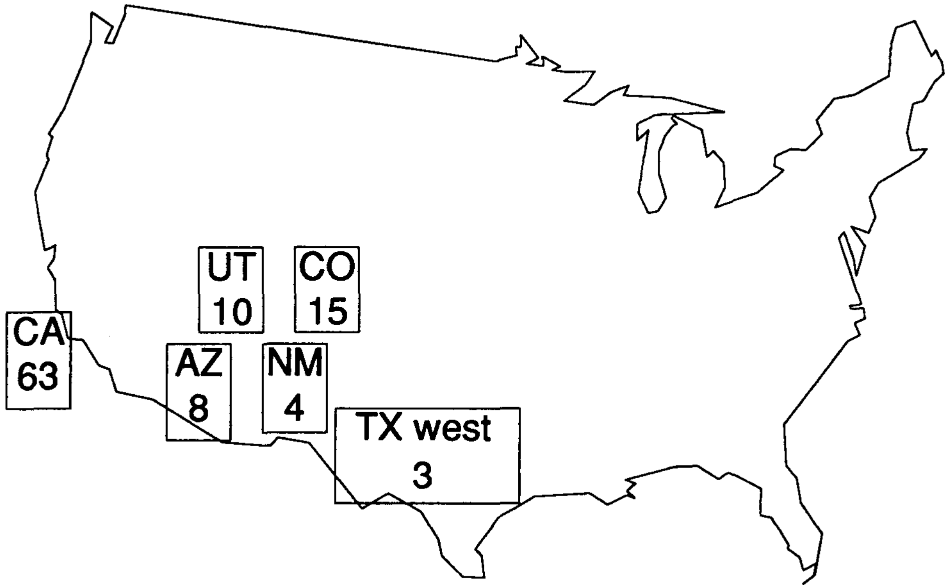

CONVENTIONAL TREATMENT COSTS FOR GROUNDWATER WITH TCE

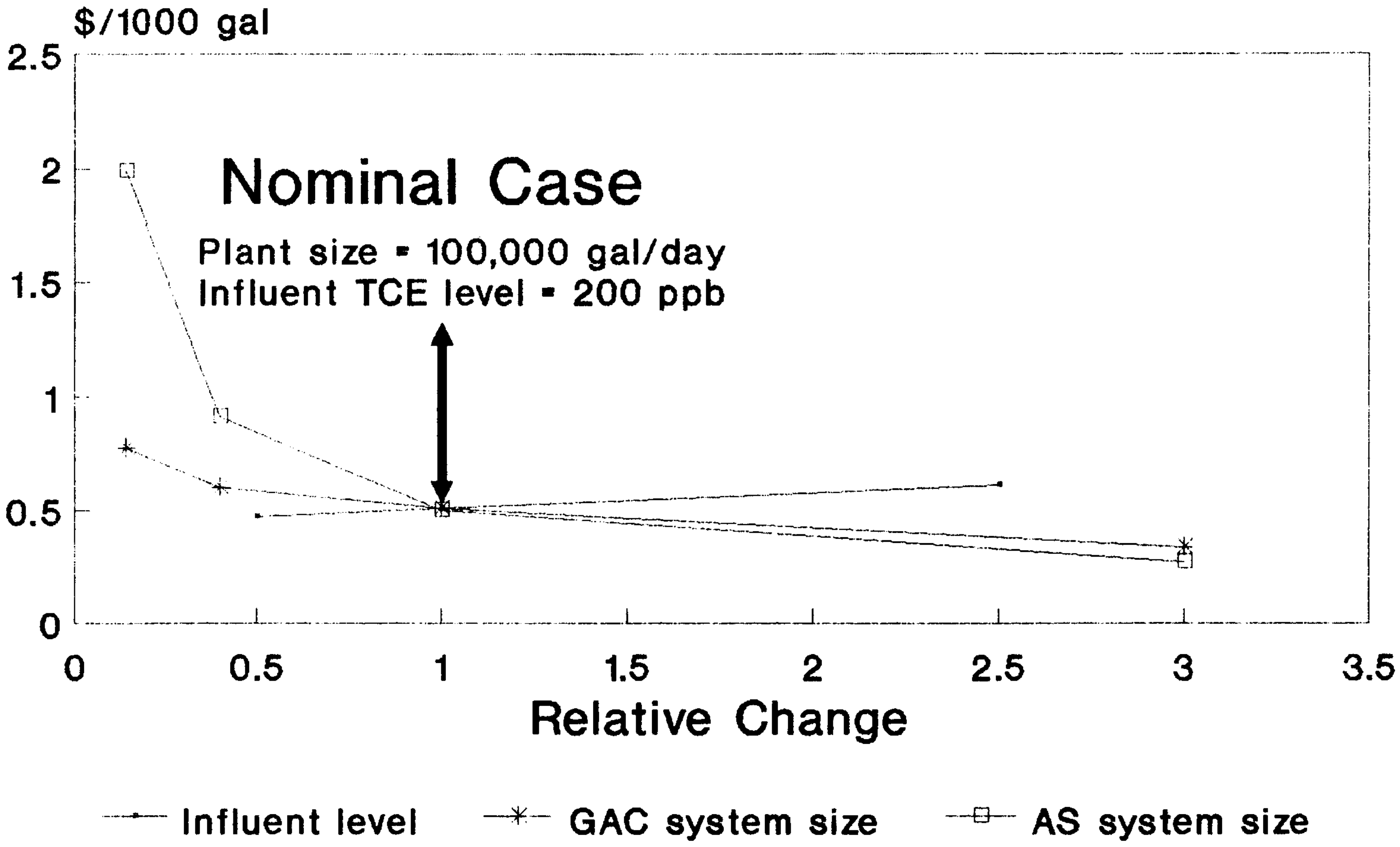

Nominal Case

Plant size = 100,000 gal/day
Influent TCE level = 200 ppb

Costs include only direct treatment costs
SOURCE: EPA

LABORATORY EXPERIMENTS

B. DELLINGER

University of Dayton

High Flux/High Temperature Solar Destruction of Hazardous Waste
-Solar Furnace Experiments - I
(SERI)

R. G. Nix and G. Glatzmaier
Thermal Systems Research Branch
Solar Energy Research Institute

ABSTRACT

Small scale field tests of the solar destruction of a hazardous waste were performed to validate the concept. Research at the University of Dayton has shown that significant photolytic enhancements of the thermal destruction reactions occur for waste molecules which appropriately absorb concentrated solar radiation.

The objectives of the tests were:

- develop an experimental technique which includes verifying that there is an appropriate mass balance and the sampling and analysis techniques are correct,
- validate that six-nines destruction can be accomplished with concentrated solar radiation,
- validate that significant solar enhancements exist,
- develop laboratory/field correspondence, and
- characterize the performance of the solar process.

The primary field test variables are the destruction temperature, the solar intensity, the fraction of the spectrum in the UV or near UV, the residence time, the gaseous composition and catalyst type. Obviously not all of these are controllable variables in the field tests.

The material chosen for initial tests of solar destruction was 1,2,3,4 tetrachloro-p-dibenzodioxin (1,2,3,4 TCDD), which is a surrogate for the highly carcinogenic 2,3,7,8 TCDD isomer. Chemical and physical properties of the isomers are very similar, but the toxicity differs substantially. The EPA-mandated destruction level for 2,3,7,8 TCDD is 99.9999 percent, also described as six-nines, which means that only 1 part in 1 million can be left undestroyed.

The initial experiments were performed in a batch mode, with later experiments with continuous feed. Any unreacted dioxin flowing from the reactor is trapped in a cold trap and the sample is analyzed by gas chromatrography/mass spectrometry by researchers at the University of Dayton.

The destruction reactor was made of fused quartz, with an approximate diameter of 4 inches and a length of about 10 inches. The reactor has a porous alumina

frit about five inches from the front to intercept the concentrated sunlight. The frit serves as an absorber of light, a preheater for the reactants, and as a catalytic surface if desired. The experimental apparatus was constructed with appropriate safeguards to prevent the inadvertent release of material to the environment.

Initial tests were performed at the White Sands Solar Furnace, which has front surface aluminum reflectors to maximize the amount of UV and near UV which is directed to the detoxification reactor.

The experiments were performed at peak fluxes as high as 1050 suns, average fluxes to 600 suns, and temperatures up to 950^{o}C. The results indicate that direct concentrated sunlight can very effectively destroy the dioxin with some experiments at 950^{o}C resulting in greater than seven-nines (99.99999 percent) destruction. This is the limit of detection with the analytical chemical analysis at the University of Dayton. Data indicate a significant solar enhancement, about three orders of magnitude more material remains with straight thermal destruction as with photo/thermal destruction at 750^{o}C.

The conclusions are:

- direct solar radiation can effectively destroy a dioxin, and
- the 300 - 400 nanometer band is extremely important in the photoenhancement process.

Additional testing is underway to further characterize the solar performance and to establish the correlation between laboratory and field performance. In addition, testing of other materials such as methylene chloride is planned. The goal is to have sufficient data that a valid comparison can be made with the catalytic destruction process being researched at SNLA in the August-September, 1989 timeframe.

SOLAR FIELD TESTING OBJECTIVES

- DEVELOP EXPERIMENTAL TECHNIQUE
  - VERIFY MASS BALANCE/TRANSPORT
  - VERIFY SAMPLING/ANALYSIS
- VALIDATE SIX-NINES DESTRUCTION
- VALIDATE SOLAR ENHANCEMENTS
- DEVELOP LAB/FIELD CORRESPONDANCE
- CHARACTERIZE PERFORMANCE

FIELD TEST VARIABLES

- TEMPERATURE
- SOLAR INTENSITY
- RESIDENCE TIME
- AMOUNT OF NEAR UV LIGHT
- GASEOUS COMPOSITION
- CATALYST

DIFFICULT EXPERIMENTS

- 1 PART IN 1 MILLION REMAINING
- MUST ENSURE NO MATERIAL HANG-UP
  -GIVES FALSE READING
  -LATER RELEASE TO MASK PERFORMANCE
- SAMPLING MUST TRAP MATERIAL
- GOOD PROCEDURE AND EXPERIMENTAL TECHNIQUE REQUIRED

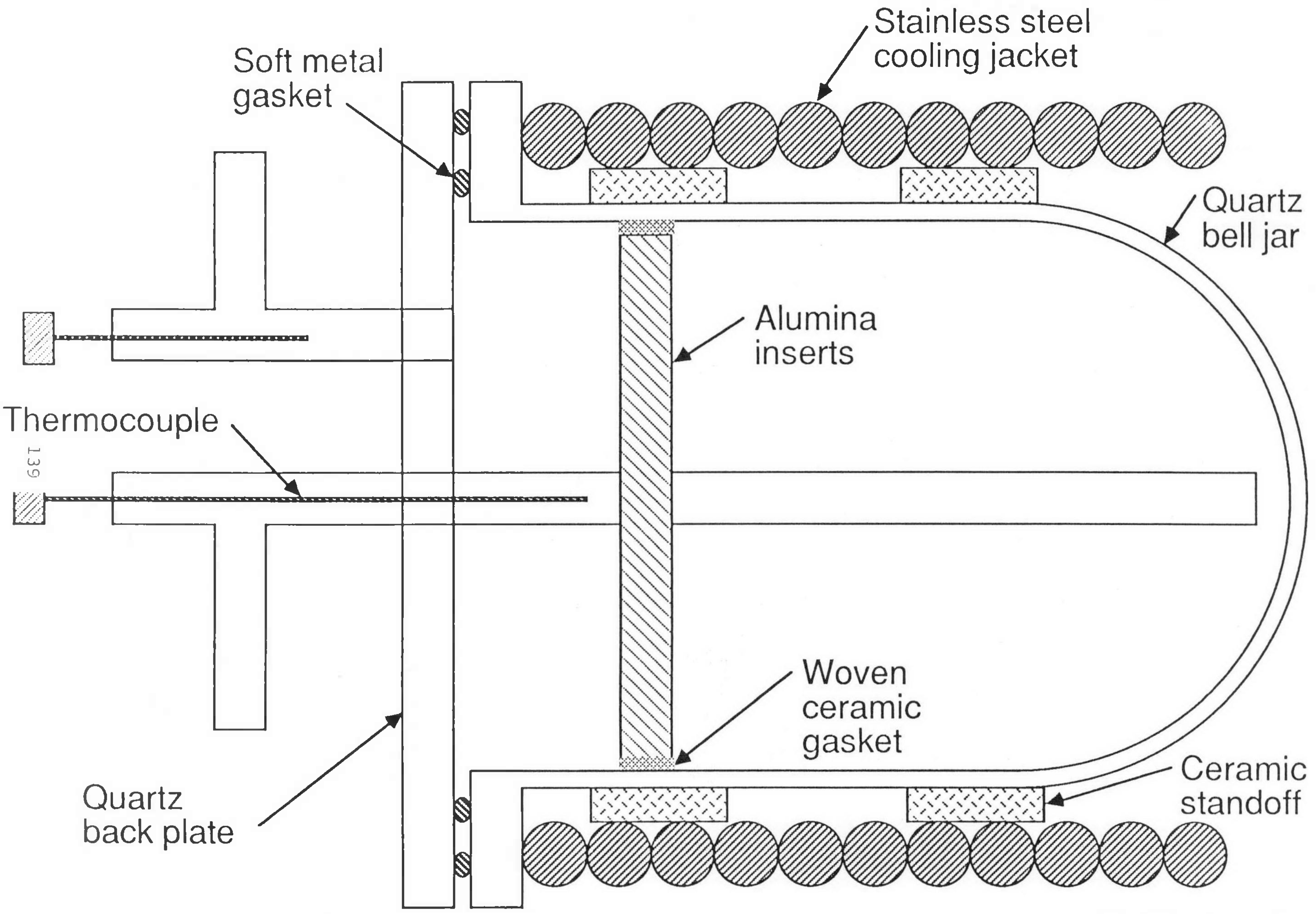

Drawing to scale

Figure 5 Assembly Drawing for Photochemical Reactor

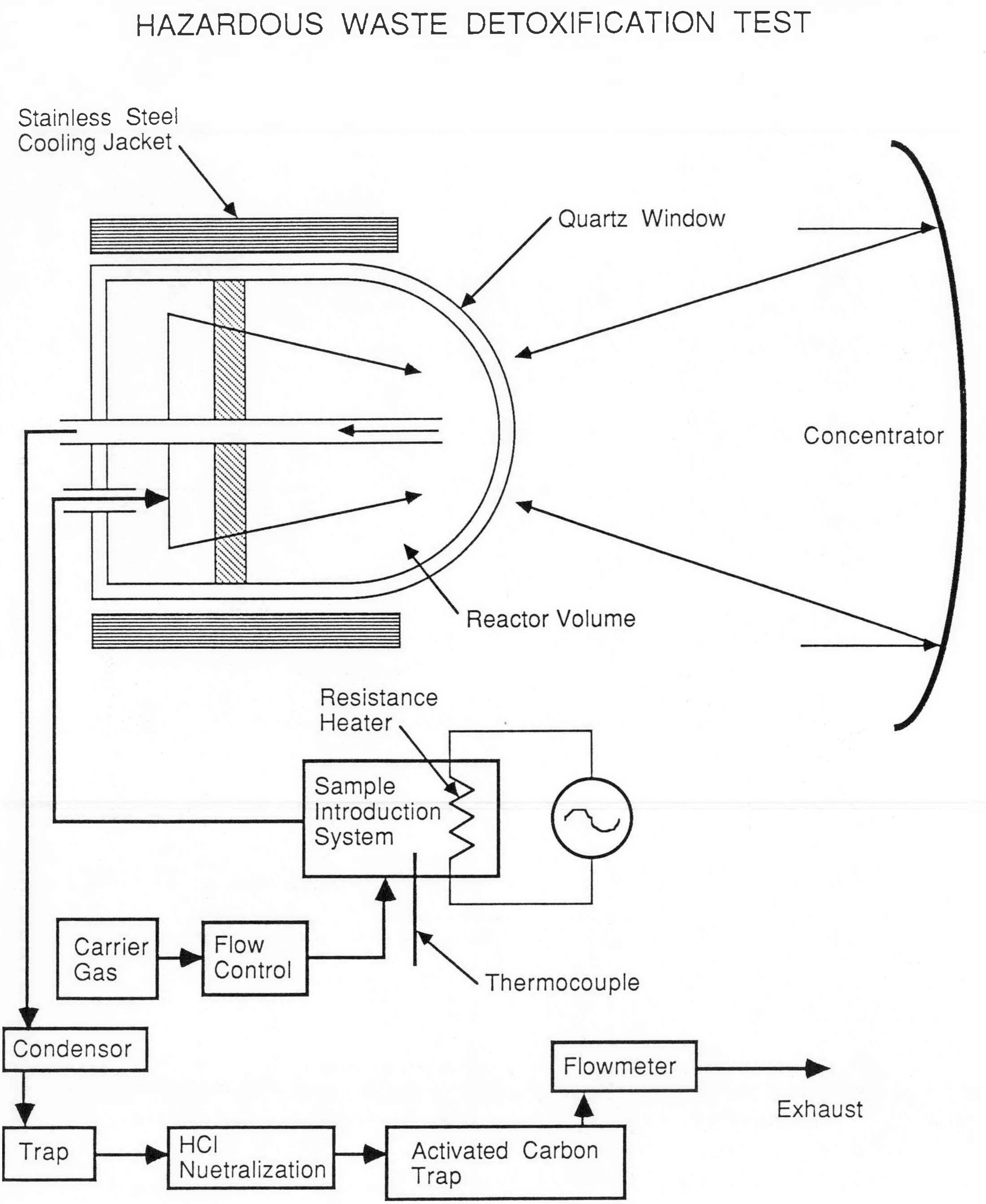

Figure 1 Schematic of photochemical reactor

FIELD TEST SUMMARY

- JUNE CHECK-OUT
  FIVE-9s +, GASKET LIMITATIONS
- JULY - POOR PERFORMANCE FROM COLD WALL TO PROTECT GASKET
- AUG - 99.9998% DRE WITH CONTAMINATED SAMPLES FROM BAD PROCEDURE
- OCT - SUCCESSFUL WITH ONE PIECE REACTOR AND NEW PROCEDURE

SERI

SOLAR DESTRUCTION OF DIOXIN

WHITE SANDS SOLAR EXPERIMENTS

- 950 C, 2 SEC RESIDENCE, 1050 SUN PEAK
  - OCTOBER >99.99999% DESTROYED
  - OCTOBER 99.99994% DESTROYED
  - NOVEMBER >99.99999% DESTROYED
  - NOVEMBER 99.99994% DESTROYED
- 950 C, 2 SEC RESIDENCE, 1100 SUN PEAK 300-400 NANOMETER BAND REMOVED
  - OCTOBER 99.9997% DESTROYED
- CONCLUSION: DIRECT SOLAR RADIATION CAN EFFECTIVELY DESTROY A DIOXIN

PLANNED FIELD TESTING

- 4 MATERIALS; DIOXIN, METH. CL.
  2 MATERIALS TBD
- OXIDATION, REFORMING, PYROLYSIS
- DIRT DESORPTION EXPERIMENTS
- CONTINUOUS AND BATCH OPERATION
- SNLA AND WHITE SANDS FURNACES

HIGH TEMPERATURE SOLAR DETOX CONCLUSIONS

- SOUND SCIENTIFIC BASES
- ESTABLISHED INDUSTRIAL TECHNOLOGY
- GOOD LABORATORY PROGRAMS IN PLACE
- FIELD TESTS SHOW SUPERIOR SOLAR PERFORMANCE
- CORE RESEARCH SUPPORTS MISSION
- RESEARCH STRUCTURED FOR DECISION POINTS

SOLAR DESTRUCTION OF DIOXIN

WHITE SANDS SOLAR EXPERIMENTS

- 750 C, 2 SEC RESIDENCE, 523 SUN PEAK
  - OCTOBER 99.99943% DESTROYED
  - OCTOBER 99.99943% DESTROYED
- 750 C, 2 SEC RESIDENCE, 586 SUN PEAK 300-400 NANOMETER BAND REMOVED
  - OCTOBER 97.76% DESTROYED (CLOUD)
  - OCTOBER 92.51% DESTROYED
- TENTATIVE CONCLUSION: 300-400 NM BAND EXTREMELY IMPORTANT FOR PHOTOLYTIC ENHANCEMENT

HIGH-TEMPERATURE SOLAR DESTRUCTION OF HAZARDOUS WASTES

Jim D. Fish
Solar Thermal Collector Technology Division 6216
Sandia National Laboratories
Albuquerque, New Mexico 87185

ABSTRACT

A solar-driven process for the destruction of hazardous chemical wastes is currently under development at Sandia National Laboratories. The process, based on catalytic steam reforming, appears to be particularly applicable to organic solvents such as alcohols, ketones, chlorinated hydrocarbons, fluorinated hydrocarbons, and physical and chemical combinations thereof. Endothermic reactions of these compounds with steam produce hydrogen, carbon monoxide, carbon dioxide, and halogen acids. The hydrogen and carbon monoxide may be recovered and converted to methanol. The halogen acids can be neutralized with sodium hydroxide or calcium carbonate (limestone) to produce salts and water.

A project to demonstrate the technical feasibility of the process was initiated in FY88 with internal Sandia funding. A test-bed direct catalytic absorption receiver (DCAR) reactor has been designed for the solar furnace at Sandia's Solar Thermal Test Facility. The housing for the DCAR reactor is an aluminum cylinder. The inside of the aluminum is coated to prevent corrosion. Internal insulation prevents overheating of the coating. One end of the DCAR reactor has a fused silica window. Concentrated sunlight passes through the transparent window and is absorbed directly on the porous alumina matrix loaded with rhodium catalyst. Because sunlight is absorbed on the sites where the endothermic reactions are taking place, heat transfer limitations are avoided and reaction rates are maximized. DCAR reactors promise to be compact, lightweight, inexpensive, and efficient.

An earlier version of the test-bed DCAR reactor was checked out with both carbon dioxide and steam reforming of methane. In a typical test, 40 l/min of a mixture of 52% CO_2 and 48% CH_4 was converted to 1% CH_4, 5% CO_2, 48% CO, and 46% H_2. Matrix temperatures varied from 1060°C near the front of the absorber to 885°C near the back. The product gas composition is consistent with equilibrium conversion at the measured outlet temperature of 860°C. The total power absorbed (chemical energy plus sensible heat) was approximately 5 kW.

At the University of Houston, laboratory experiments with methylene chloride have demonstrated the application of the reforming process to destruction of hazardous chemicals. Preparations are underway for similar experiments in the solar furnace at Sandia.

Solar Destruction of Hazardous Wastes

OVERVIEW

OBJECTIVE

- **Demonstrate cost effectiveness of solar destruction of hazardous wastes**

SCOPE

- **Direct Catalytic Absorption Receiver (DCAR) Development**
- **Laboratory Experiments**
- **Field Experiments**
- **Modeling**
- **Systems Analysis**

F89 GOALS

- **Proof of technical feasibility for a broad spectrum of priority wastes**
- **Preliminary identification of high-potential markets**
- **Define R&D program focused on commercial application**

APPROACH

- **Catalytic Steam Reforming of Halocarbons**
  - **Excess steam**
  - **DCAR reactor**

- **Water Quench**

- **Neutralization of Acidic Product Gases**

Direct Catalytic Absorption Receivers

EFFICIENT

- Volumetric absorption directly in reaction zone
- High surface areas
- Multiple cavity effect
- High-flux capability
- Compact
- High-temperature capability
- Cocurrent flow of sunlight and reactants
- Windowed

LOW COST

- Lightweight and inexpensive ceramics
- Compact
- Internal insulation
- Simple to fabricate

RELIABLE

- Decoupled pressure and temperature containment
- Microstructured ceramics
- Low stresses
- Resistance to corrosion

SOLAR-DRIVEN STEAM REFORMING

$$H_2O + C_2H_2Cl_4 \text{ —- } H_2 + CO + HCl + CO_2$$

WHY SOLAR?

COMBUSTION

- Fuel Required
- Oxygen Required
- Products of Incomplete Combustion
- NO_x
- Flue Gas Cleanup

SOLAR

- Concentrated Effluent
- Potential for High DRE at Lower Temperature
- NO_x Free
- Potentially Effective at Smaller Scale

TEST RESULTS

Preliminary Tests Indicate Equilibrium Conversion of CO_2 / CH_4 and H_2O / CH_4

- Temperatures in the range 1000 - 1300K
- Pressures in the range 0.5 - 0.7 atm
- Solar power absorbed by chemicals in the range 1 - 4 kW
- Less than 1% CH_4 at outlet (in agreement with equilibrium predictions)
- Reactor matrix and catalyst not optimized

PLANNED ACTIVITIES

- Continued Furnace Testing to Include Chlorinated Hydrocarbons
- Laboratory Experiments
  - Materials
  - Kinetics
- Conceptual Design of Analysis System (EPA Certified)
- DCAR Reactor Development
  - Modeling
  - 100-kW CAESAR Reforming Test in Germany

SANDIA IN-HOUSE RESEARCH

* **FURNACE EXPERIMENTS**

Technical Feasibility
DCAR Reactor Development
Catalysis Screening
Process Optimization
Model Validation
Pilot-scale Demonstration

* **SYSTEMS ANALYSIS**

Market Assessment
Permitting Issues
Modeling
Conceptual Design

* **CAESAR**

DCAR Reactor Development
Controls
Transients
Model Validation
Commercial-scale Demonstration

SANDIA CONTRACTS

* **UNIVERSITY OF HOUSTON**

Catalyst Development
Process Development
Reactor Modeling
Liaison with Commercial Interests

* **DELPHI RESEARCH INC**

Product Analyses
Commercial Design of Analysis System
Marketing Approach

Sandia Laboratories
Solar Energy

Solar Destruction of Hazardous Wastes

SUMMARY

- COMPREHENSIVE R&D PROGRAM
- DEMONSTRATED PERFORMANCE ON HYDROCARBONS
  - High Extent of Reaction
  - 1-4 kW Level
  - Achieved Matrix Temperature of 1300K
- CHLORINATED HYDROCARBONS NEXT

ABSTRACT

Research on Destruction of Organics in Dilute Aqueous Solutions

J. D. Webb, K. Magrini

We are investigating a relatively new treatment process for removal of low concentrations of organic compounds from wastewaters. This process uses the ultraviolet (UV) portion of the solar spectrum as the driving force for the photocatalytic oxidation of dissolved organic species at the surface of semiconductors. We have utilized suspended titanium dioxide (TiO_2) in our work to date, although we are also investigating supports for this catalyst. We have obtained initial reaction rates for two typical waste stream constituents, trichloroethylene and Direct Red 79 dye, which require chromatographic and spectroscopic analyses, respectively. We are utilizing a closed, recirculating photochemical reactor with a solar simulator capable of generating UV flux levels approximately two orders of magnitude greater than those measured for terrestrial solar radiation (Air Mass 1.5, Direct Normal) The procedures for calibrating UV spectral output of the simulator relative to an NBS-traceable irradiance standard will be discussed.

The process parameters that we are investigating with the photochemical reactor include the effects of (simulated) solar flux level, reactant and catalyst concentration, temperature, pH, and catalyst particle size and type. Our results to date indicate that TCE decomposes more rapidly than the Direct Red dye, which decomposes via several intermediate species. The initial reaction rates for the red dye were found to be linearly dependent upon solar flux level over the range of UV fluxes available from the simulator.

SERI Solar Simulator Setup for Aqueous Photodecomposition Tests

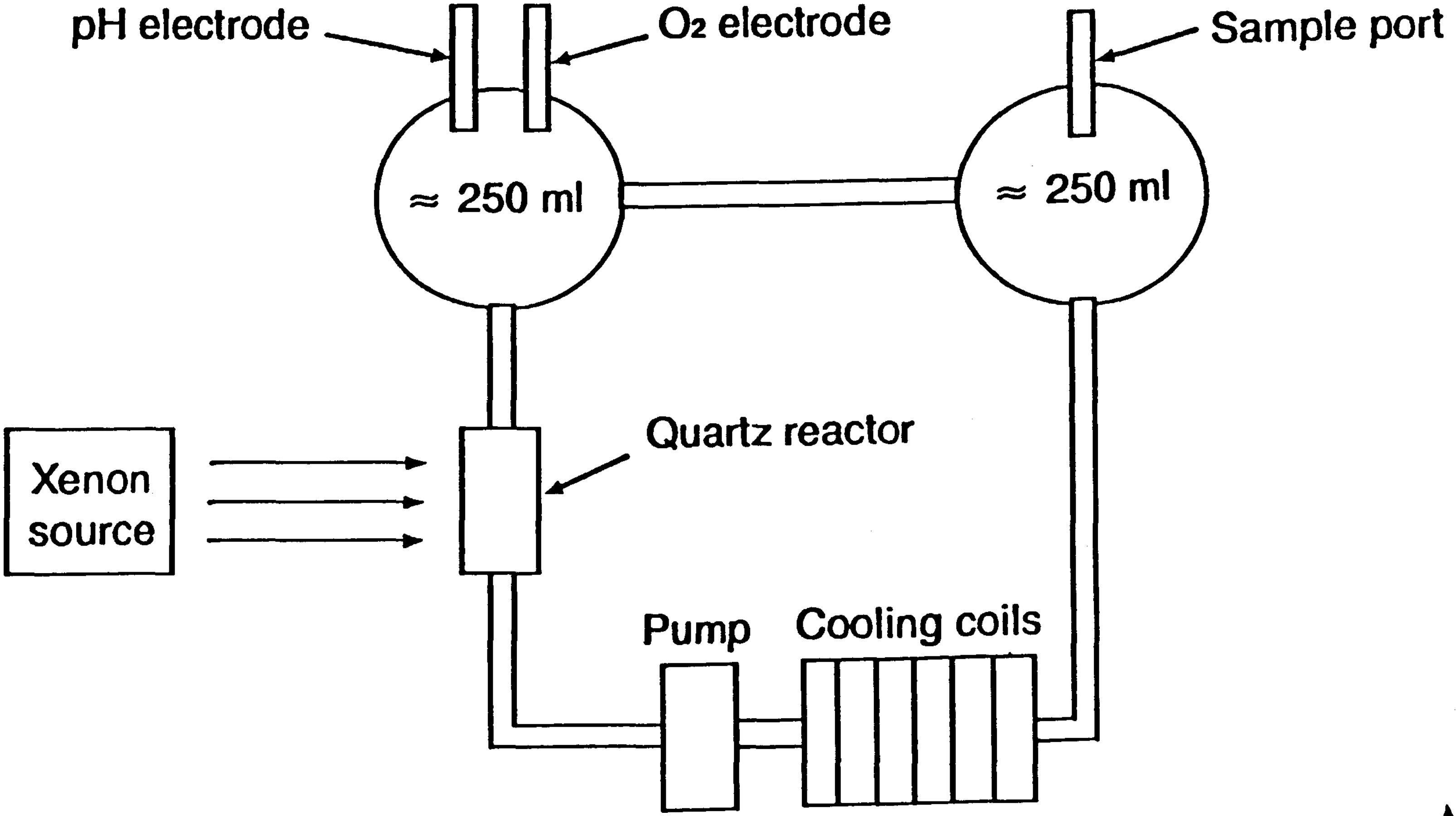

pH electrode

O_2 electrode

Sample port

≈ 250 ml

≈ 250 ml

Quartz reactor

Xenon source

Pump

Cooling coils

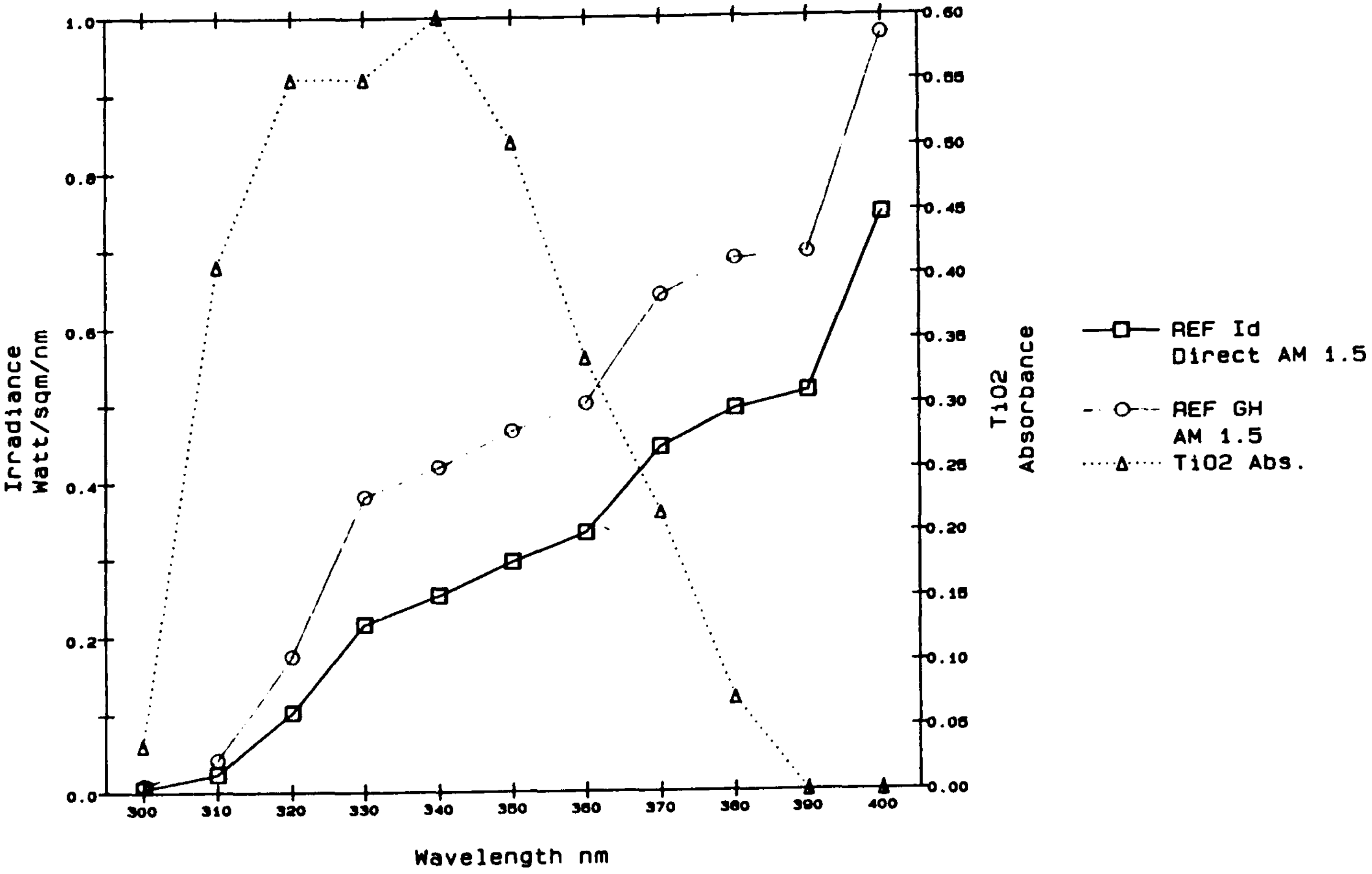

Reference Spectra Irradiance
Compared to TiO2 Absorbance

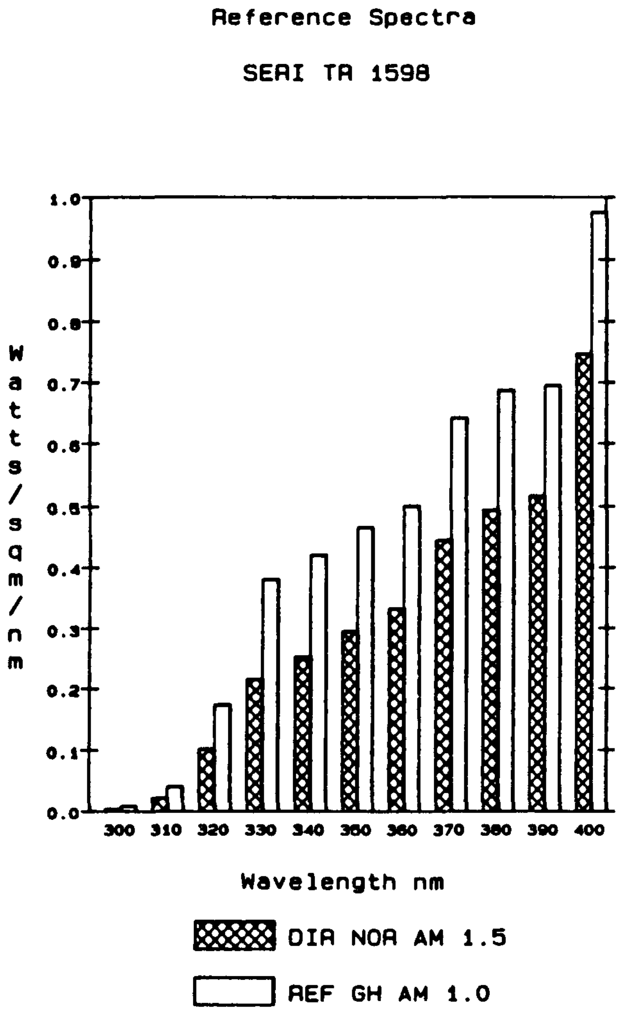

Reference Spectra

SERI TR 1598

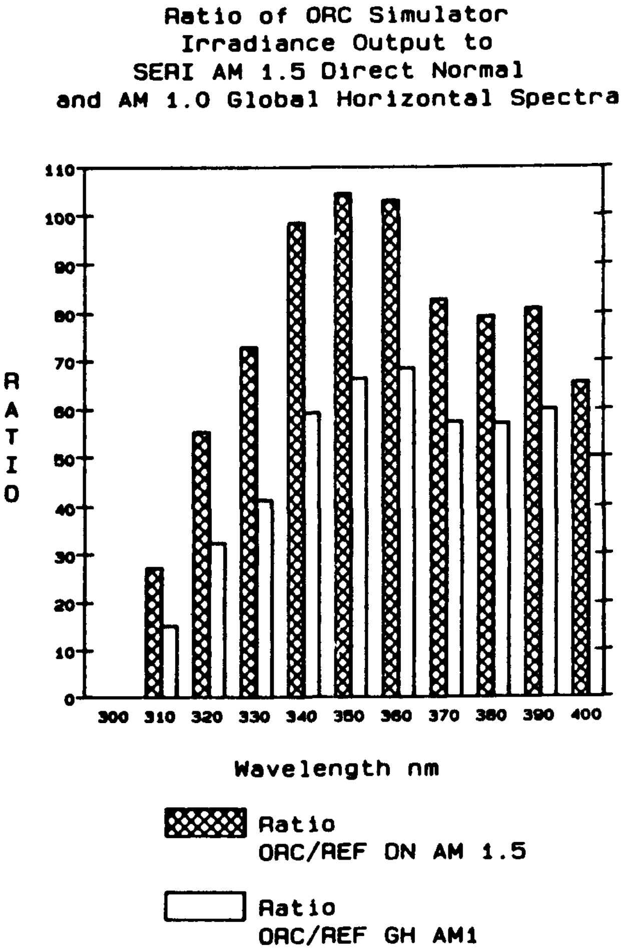

Ratio of ORC Simulator Irradiance Output to SERI AM 1.5 Direct Normal and AM 1.0 Global Horizontal Spectra

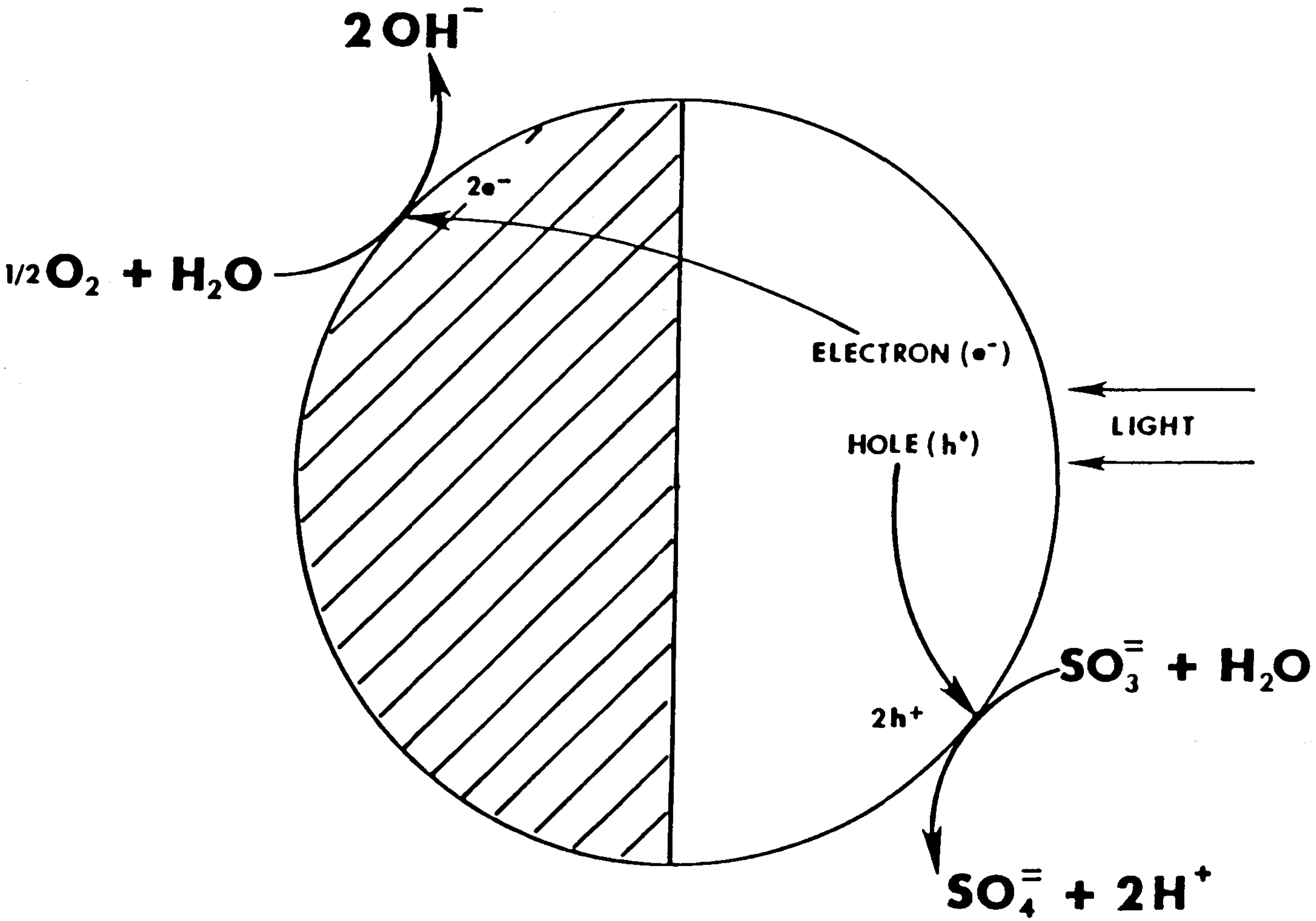

Schematic representation of photocatalytic oxidation of sulfite.

Formation of Carbon Dioxide With Photodecomposition of TCE

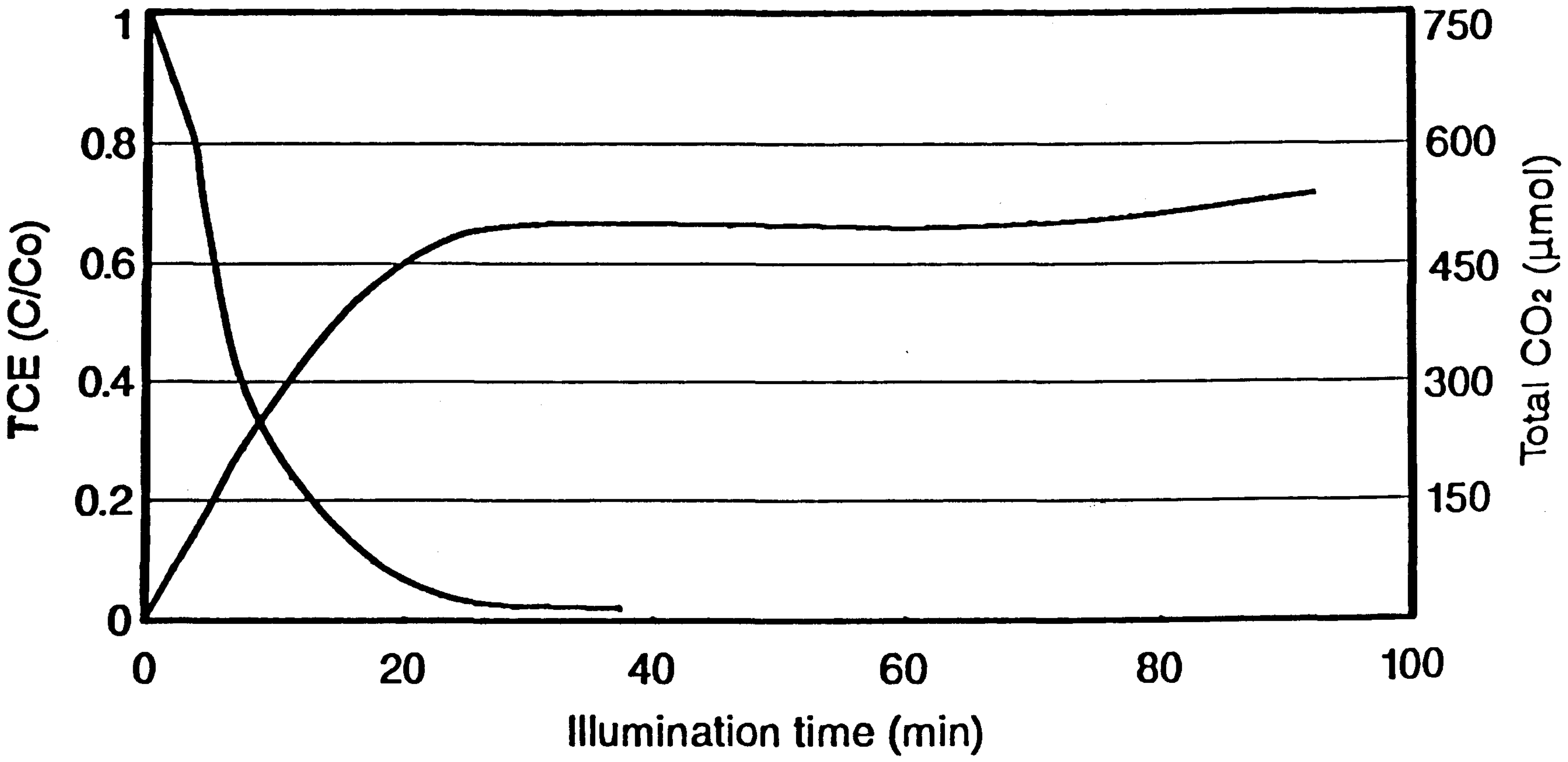

Formation of Carbon Dioxide With Photodecomposition of Benzene

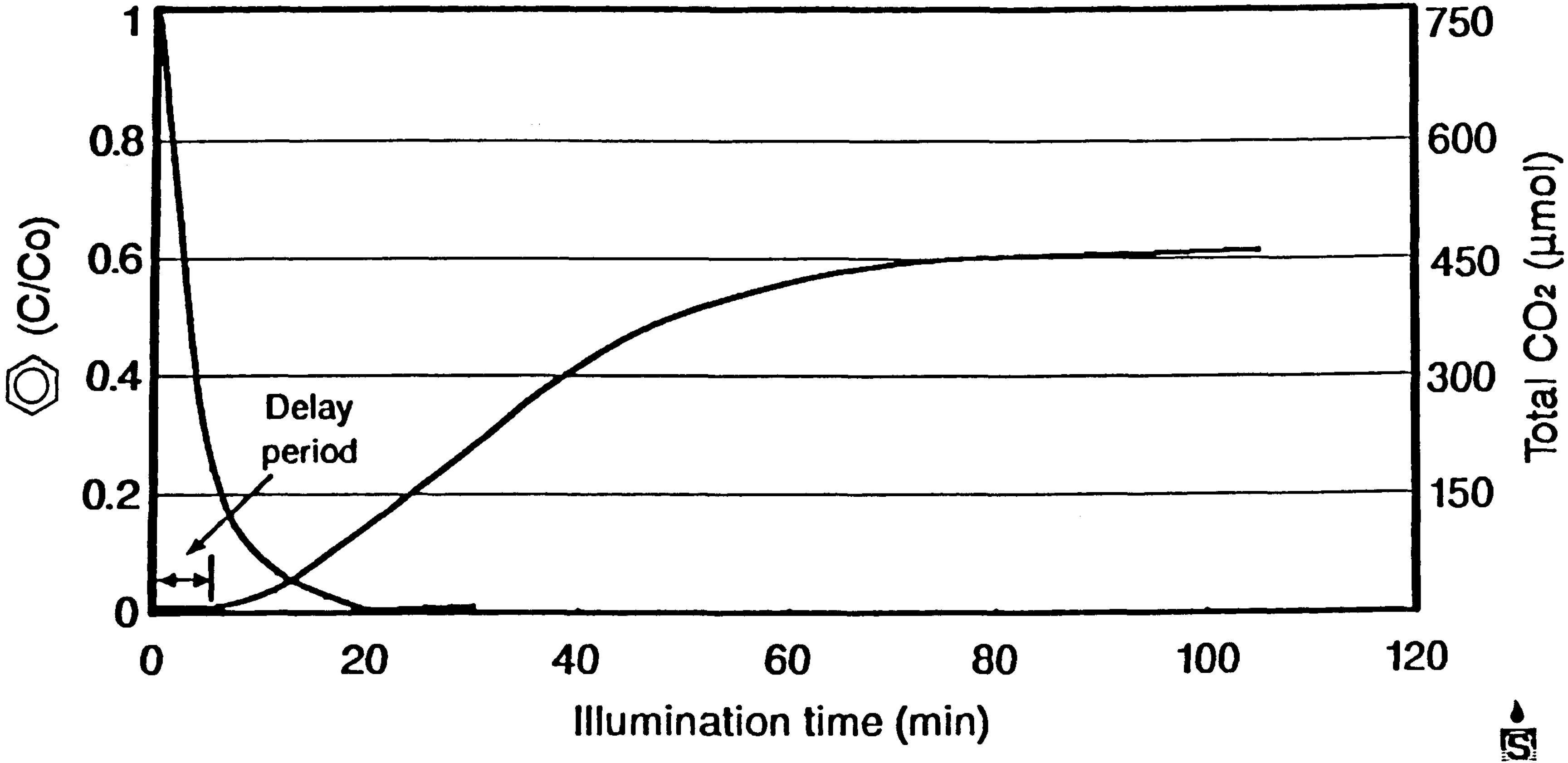

pH of TCE Photocatalytic Decomposition

(146 ppm TCE, 0.03% TiO_2, Variable = Flux, 330 nm)

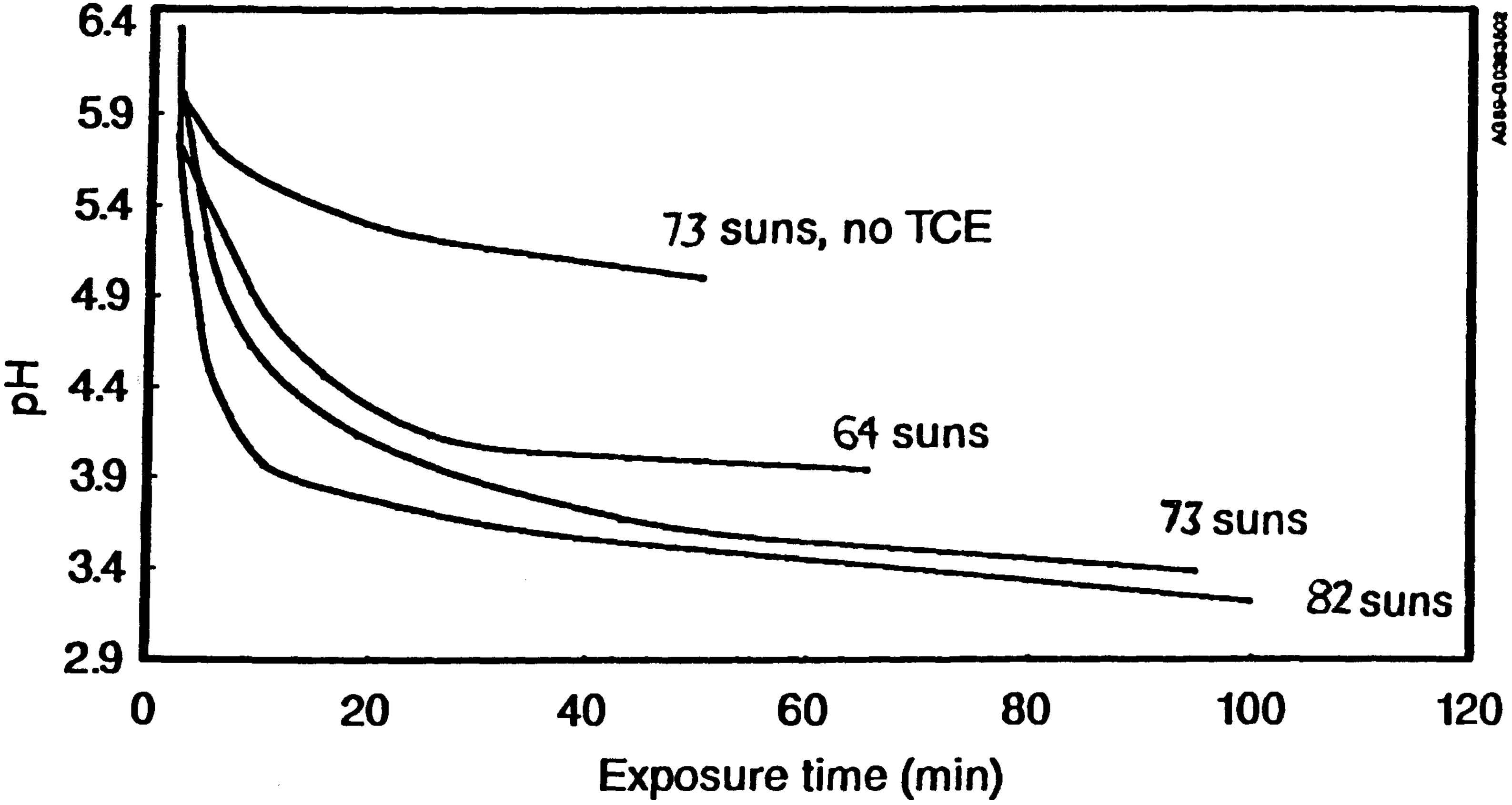

Photocatlytic Decomposition of Red-79
0.1% TiO2 78 Suns Max

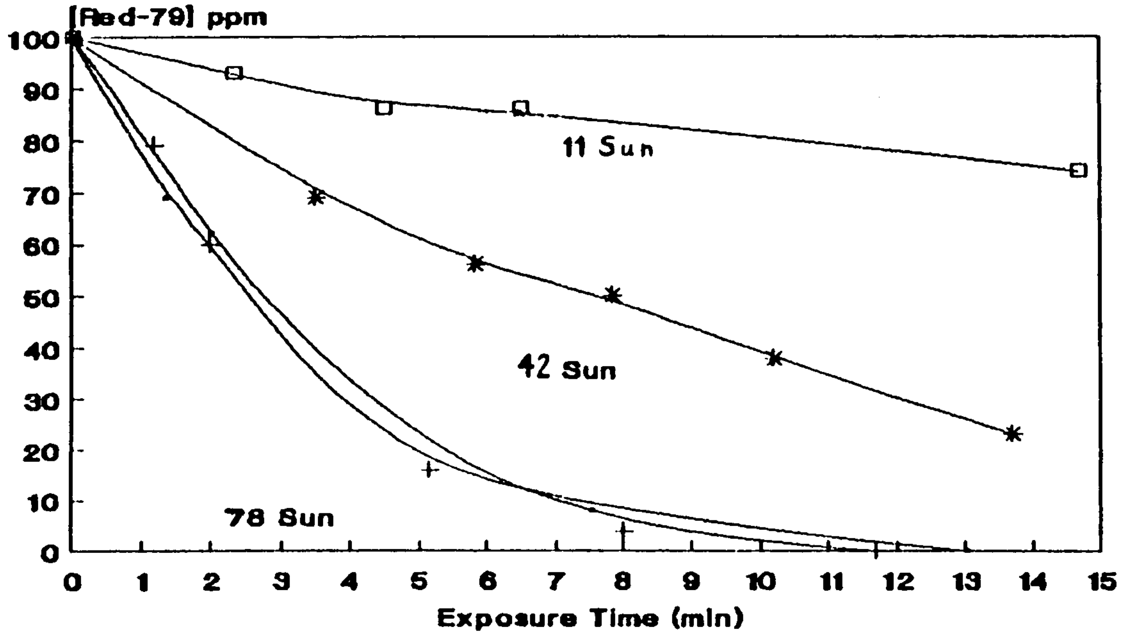

0123

Photocatalytic Decomposition of Red-79
Variable = [TiO2]

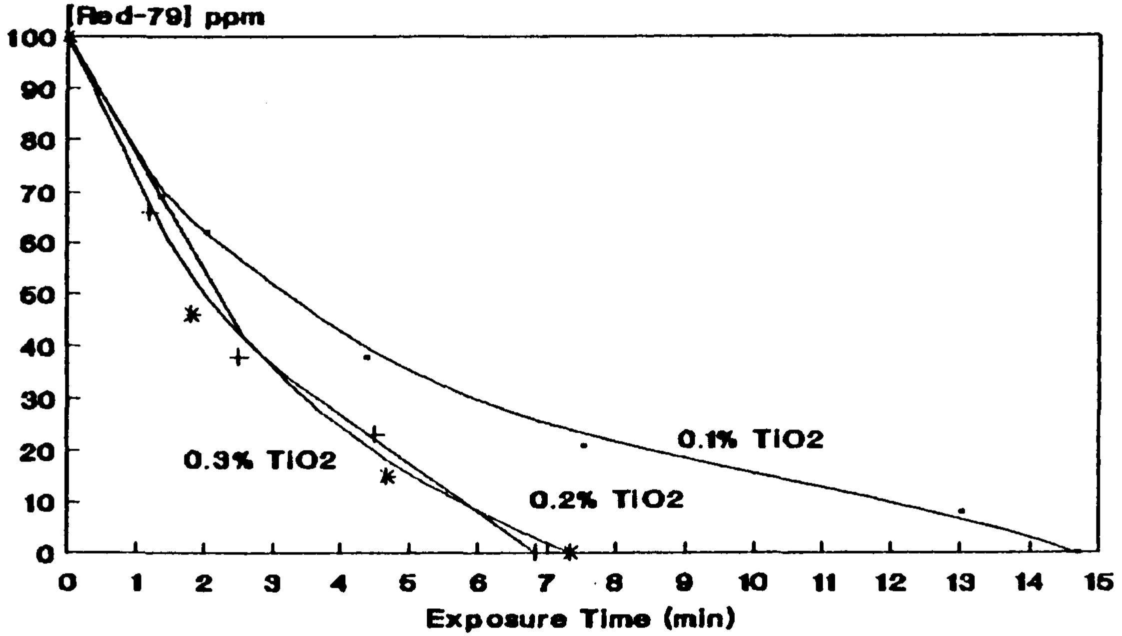

100 ppm Dye Flux = 78 Suns (330 nm)

Initial
Decomposition Rate versus Flux
Rates determined between 1.5 and 3 min

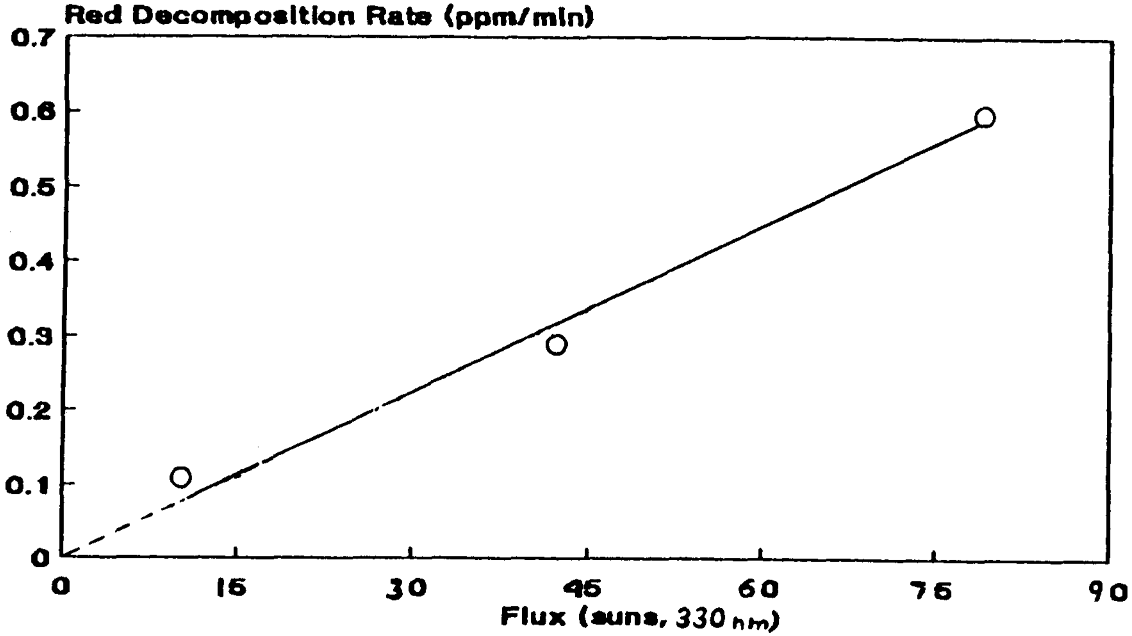

Engineering Studies of the Photocatalytic Destruction of Organics in Water

Craig E. Tyner
Energy Conversion and Process Science Department
Sandia National Laboratories
Albuquerque, New Mexico

We have recently begun work on a solar-driven photocatalytic process that promises to completely destroy low concentrations of hazardous organic molecules in large volumes of contaminated ground water or industrial waste streams. In this process, sunlight is focussed on a reactor, through which the contaminated water is flowing. Ultraviolet energy in the concentrated beam activates a catalyst in the waste stream. Activated sites on the catalyst surface cause formation of very reactive species, which in turn initiate reactions oxidizing the organic molecules. This process is capable of destroying most halogenated (i.e., containing chlorine, fluorine, or iodine) and non-halogenated organic compounds, including trichloroethylene, PCBs, dioxins, DDT, etc.

The catalyst we are using is titanium dioxide, a simple paint pigment. All reactions occur at warm-water temperatures. The organics are completely "mineralized," reacting with oxygen to form only carbon dioxide, water, and simple mineral acids. There are generally no hazardous intermediate compounds, and no cleanup of the effluent is required, other than possibly neutralization of the very dilute acids.

Our efforts are centered on combining the results of extensive research on catalyzed photochemical processes with hardware developed in our solar thermal development program. We will provide solar energy in one of two ways. In the first case, sun-tracking mirrors called heliostats will concentrate the solar energy onto a centrally located reactor (i.e., a "central receiver"). The reactor will consist of a thin, "falling film" of contaminated water flowing down a vertical panel exposed to the beam. In the second case, parabolic troughs will be used to concentrate the solar energy onto a long, glass tubular reactor supported along the focus of the troughs. On-site processing will be possible using transportable solar and reactor equipment.

A typical heliostat plant might consist of about ten 100-m^2 heliostats set in an array around the central reactor. A land area equivalent to about two football fields will be required. In the typical case in which contaminated ground water is being detoxified, water will be pumped from the ground through the reactor. After verification that the process has been successful, the water will be reinjected into nearby wells. Processing will continue until site remediation is complete. Processing costs will be competitive with alternate technologies.

Our progress to date has included successful demonstration of the waste destruction capabilities of the falling-film reactor and screening of various catalysts, oxidants, and reactor configurations. We are working very closely with the Solar Energy Research Institute on system applications and reaction chemistry. The goal of the solar thermal program is to have a demonstration system operating at a contaminated DOE field site by the early 1990s. Current funding sources include the DOE solar thermal program, the DOE HAZWRAP program, and Sandia internal research and development programs.

Engineering Studies of the Photocatalytic Destruction of Organics in Water

Craig E. Tyner
Energy Conversion and Process Science Department
Sandia National Laboratories
Albuquerque, New Mexico

Solar Thermal Annual R&D Review
Arlington, Virginia
March 8-9, 1989

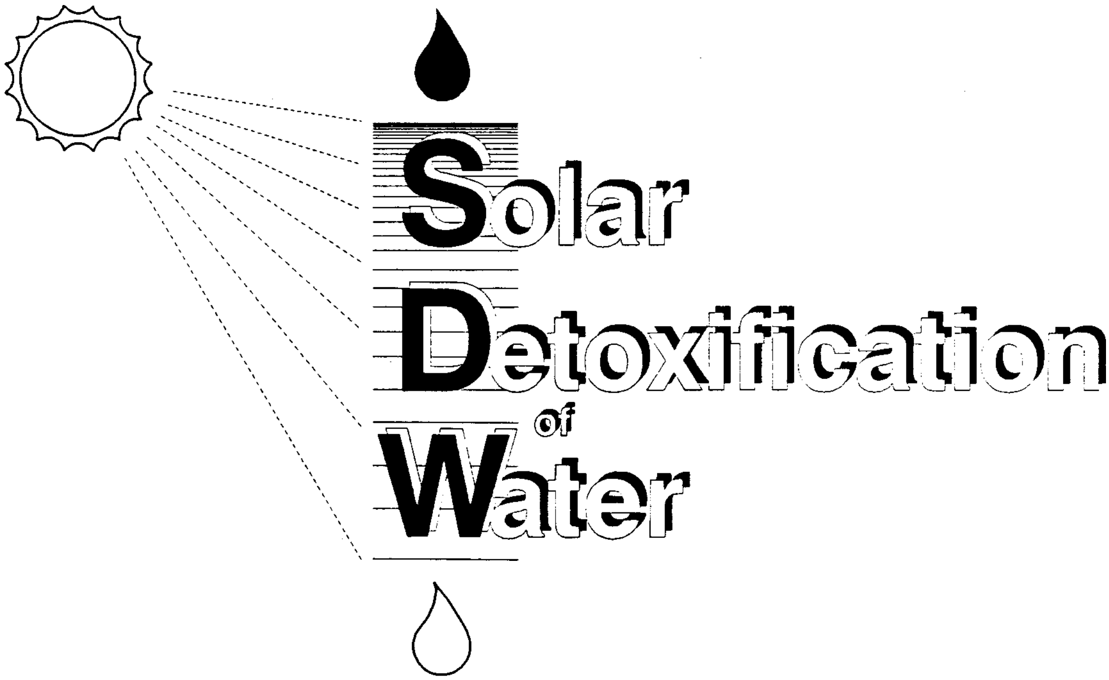

Solar Detoxification of Water

Rationale

75% of the 280 million tons of hazardous materials generated in the U.S. each year is contaminated waste water.

Groundwater detoxification has been designated the number one DOE hazardous waste R&D priority.

Solar-driven photocatalytic reactions can completely destroy organic contaminants in water.

Status and Goals

Solar detoxification of typical organic compounds in water has been demonstrated in the laboratory and at an engineering scale.

We are conducting pilot-scale experiments to define process requirements and efficiencies and to help estimate costs.

The solar thermal program goal is a pilot-scale demonstration of the technology at an industrial site in the early 1990's.

The SDW Process

The ultraviolet component of concentrated solar energy activates a catalyst (typically titanium dioxide) in the reactor.

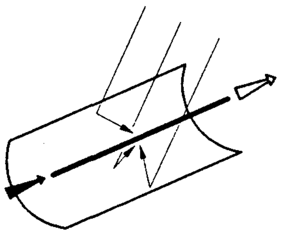

Trough System

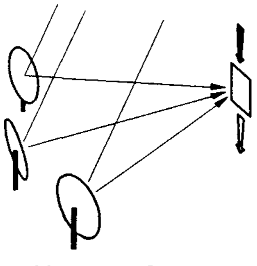

Heliostat System

Halogenated organic contaminants react at the activated catalyst sites to form carbon dioxide, water, and simple dilute acids.

$$C_xH_yO_zCl_w + \text{Oxygen} \xrightarrow[TiO_2]{Solar} CO_2 + H_2O + HCl$$

Reaction rates depend on UV, catalyst, oxidant, and contaminant concentrations. Optimal reactor design will minimize costs while assuring detoxification to required EPA levels (typically a few ppb).

PLANT CONCEPT

SOLAR PHOTOCATALYTIC DETOXIFICATION OF LIQUID WASTE

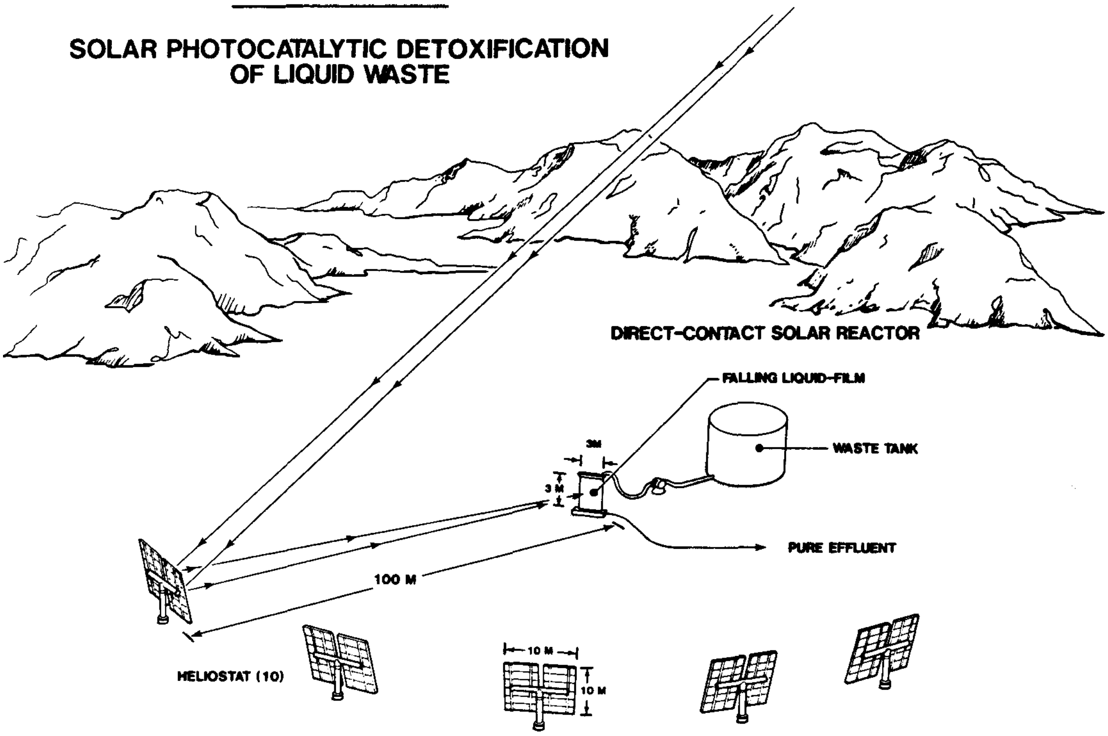

SDW

SDW Target Chemicals

- **Chlorinated Solvents (TCE)**
- PCBs
- Dioxins
- Pesticides (DDT)
- Munitions (TNT)
- Cyanides
- Industrial Dyes

SDW R&D Program Elements

- Systems and Opportunity Studies
- Reaction Chemistry Studies
  - Bench-Scale Experiments
  - Reaction Modeling
- Engineering-Scale Experiments
  - Heliostat Systems
  - Trough Systems
  - Process Modeling
- Field Demonstration

SDW Systems and Opportunity Studies

- **Market Assessment**
  - Potential Applications
  - Competition (Technologies, Costs)
  - Regulatory Issues
- **Conceptual System Design**
  - Optimal Concentration Ratios
  - Solar Utilization
  - Reaction Rates / Throughput
  - Transient Issues

SDW Engineering-Scale Development

Process Concepts

Heliostat-Driven Process (HESSE)
- Parallel Glass Tube Reactor
- Falling-Film Reactor

Parabolic Trough-Driven Process (TESSE)
- Series Glass Tube Reactor

Objectives

Validation and Extension of Lab Chemistry
Performance Data for Models and Plant Design
Early Industry and User Participation

SDW Engineering-Scale Development

Hardware Issues

Collectors/UV Reflectors
Simple, Efficient Reactor
Controls
Catalyst Handling
Heat Rejection or Utilization
Operations & Maintenance

Systems Issues

Reaction Rates and Completeness
Plant Design
Site Selection
Licensing / Permitting / Safety
Annual Performance / Costs
Technology Transfer

SDW Heliostat Engineering-Scale Subsystem Experiment

Falling Film Reactor Schematic

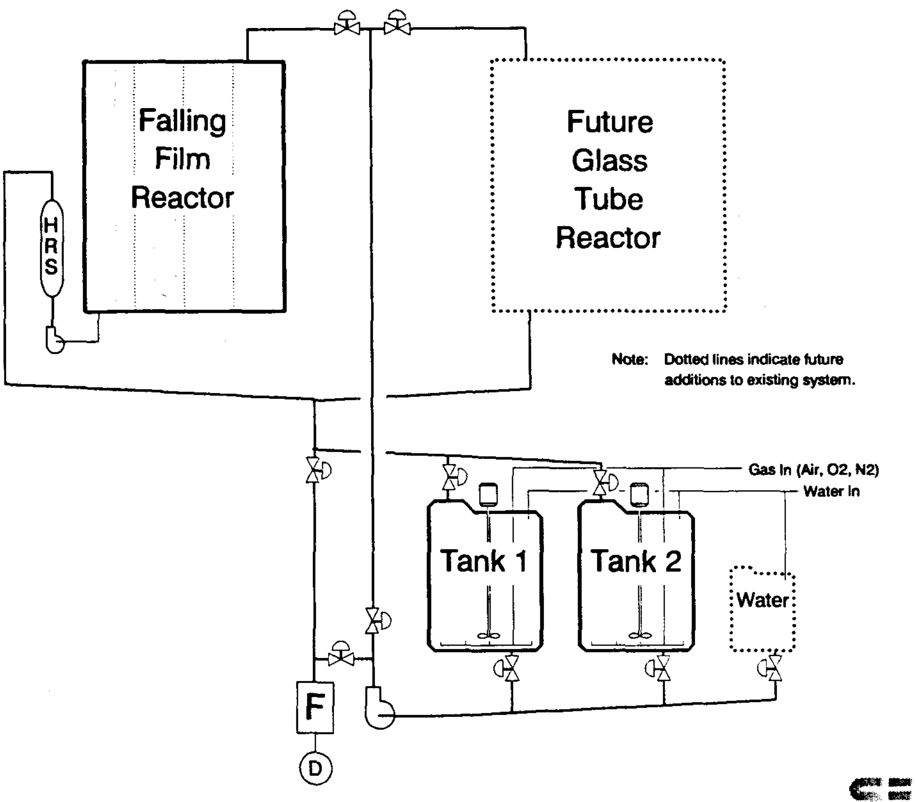

Note: Dotted lines indicate future additions to existing system.

SDW Trough Engineering-Scale Subsystem Experiment

Tubular Glass Reactor Schematic

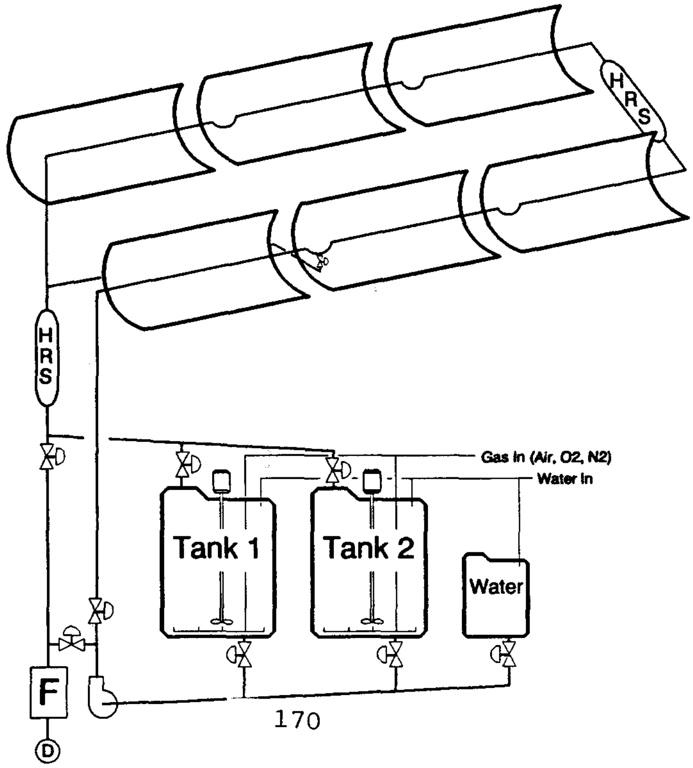

Preliminary Salicylic Acid Detoxification Testing

12/12-14/88 Solar and 12/21-22/88 Lab Tests

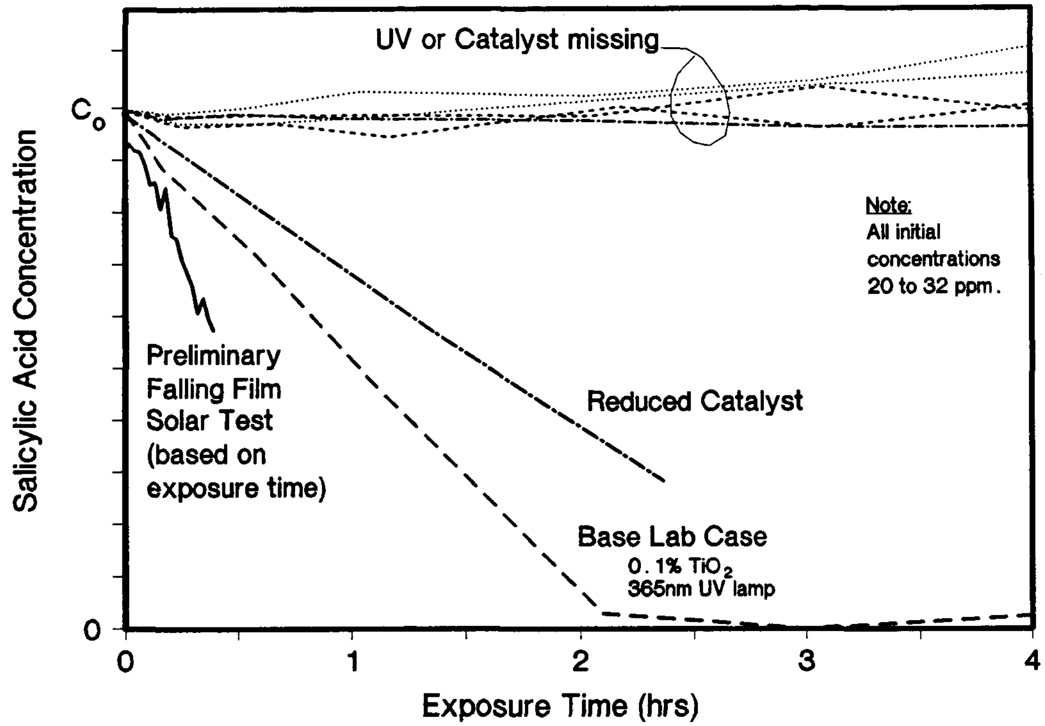

SDW Status

- Sound Scientific Base
- Supporting Core R&D
- Laboratory and Engineering Studies Underway
- Potential Near-Term, High-Value Market for Solar Hardware

APPROACHING THE IRRADIANCE OF THE SUN THROUGH THE APPLICATION OF NONIMAGING OPTICS

ROLAND WINSTON, PHILIP GLECKMAN & JOSEPH O'GALLAGHER *

*DEPARTMENT OF PHYSICS, THE UNIVERSITY OF CHICAGO,
CHICAGO, ILLINOIS 60637, USA

ABSTRACT

In designing a concentrator as an image-forming system, unnecessarily high standards are being set since high light collection rather than imaging is desired. Nonimaging designs exceed the concentration attainable with focusing techniques by factors of four or more and approach the Thermodynamic limit. These methods have been applied to concentrate terrestrial sunlight by 60,000 fold and are capable of approaching or even exceeding the surface irradiance of the sun. Our present two-stage concentrator would, if deployed above the earth's atmosphere, already give an irradiance in excess of that on the sun's surface. That is, the flux level at the suns surface corresponds to about 46,000 times the local interplanetary solar constant of 137 milliwatts/cm^2 or to about 6.3 kW/cm^2, whereas our flux enhancement factor of 56,000 would yield an irradiance of about 7.7 kW/cm^2. Certain straightforward improvements can increase the flux significantly above that already achieved. For instance, replacing the metallic oil-filled secondary with an all-dielectric secondary, which operates by total internal reflection is very effective. This is because a) absorption is substantially eliminated by proper choice of material, (say sapphire), b) imperfect specular reflection is replaced by total internal reflection and c) one gains as n^2 with a higher index material (for sapphire, $n \approx 1.8$). Thus, one might expect to be able to achieve at least 80,000 suns. Even on the earth's surface this would correspond to an irradiance substantially in excess of that on the surface of the sun and would be far in excess of the most intense artificial broad-band continuous light sources that have been devised These are, at best $\approx$ 2 kW/cm^2. One application of such very high flux is to solar pumped lasers. Previous researchers have achieved lasing with solar pumping of Nd:YAG crystals, but

the efficiency was low, $< 1\%$. Higher flux increases efficiency since the optical energy can be delivered to the end of a cylindrical laser rod where most of it can be trapped inside by reflection so that absorption takes place along the entire length of the rod. Perhaps an even more important benefit of high flux levels for laser pumping is that they may have special advantages for pumping alternative lasants. Some examples are alexandrite, which is tuneable, dye lasers that lase in the visible, and glass lasers which are low-cost. Other applications of high radiant flux might be in providing new techniques for the destruction of hazardous waste or the processing of specialized materials.

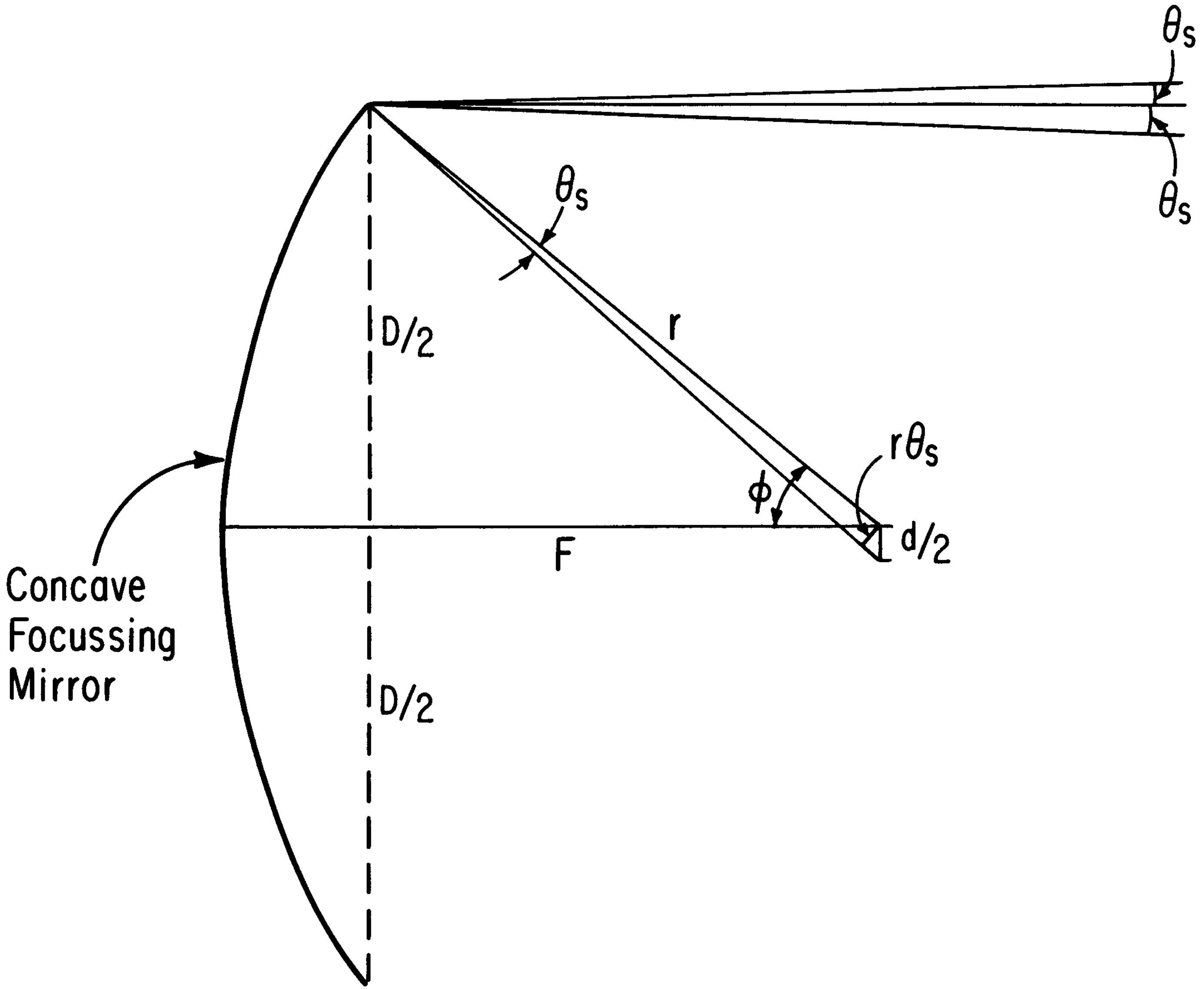

Fig. 1. Geometry of a focusing mirror concentrator. The angular size of the source (θ_s) determines the diameter of the image (d).

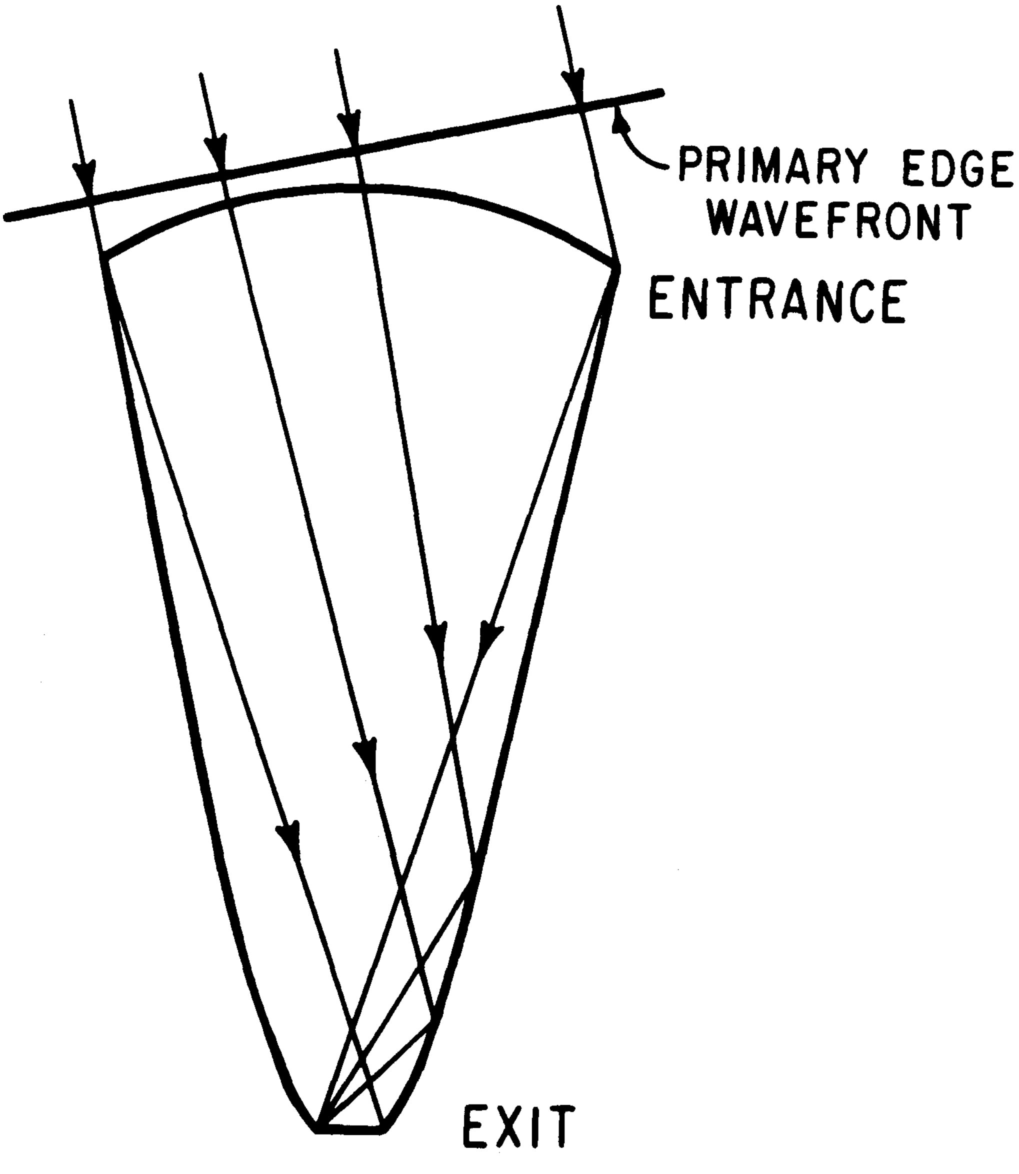

Fig. 2. Edge ray principle. The secondary wall profile is designed in the meridional plane to image the rays from the primary edge to the secondary exit rim. Designed in this way, the secondary concentrates all rays from the primary interior to the secondary exit aperture in the meridional plane.

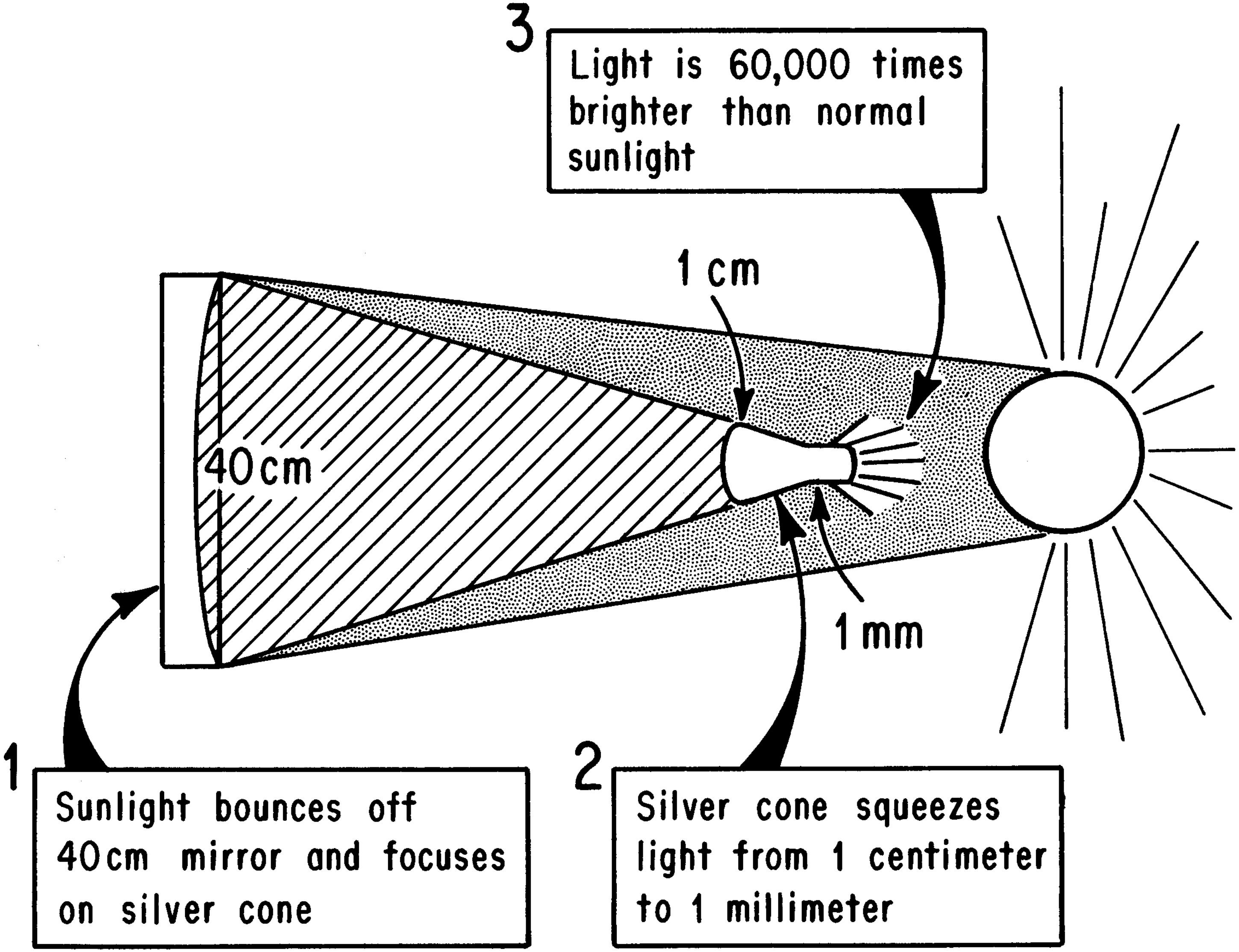

Light is 60,000 times brighter than normal sunlight

Sunlight bounces off 40cm mirror and focuses on silver cone

Silver cone squeezes light from 1 centimeter to 1 millimeter

Fig. 3. Conceptual overview of the high flux solar concentrator.

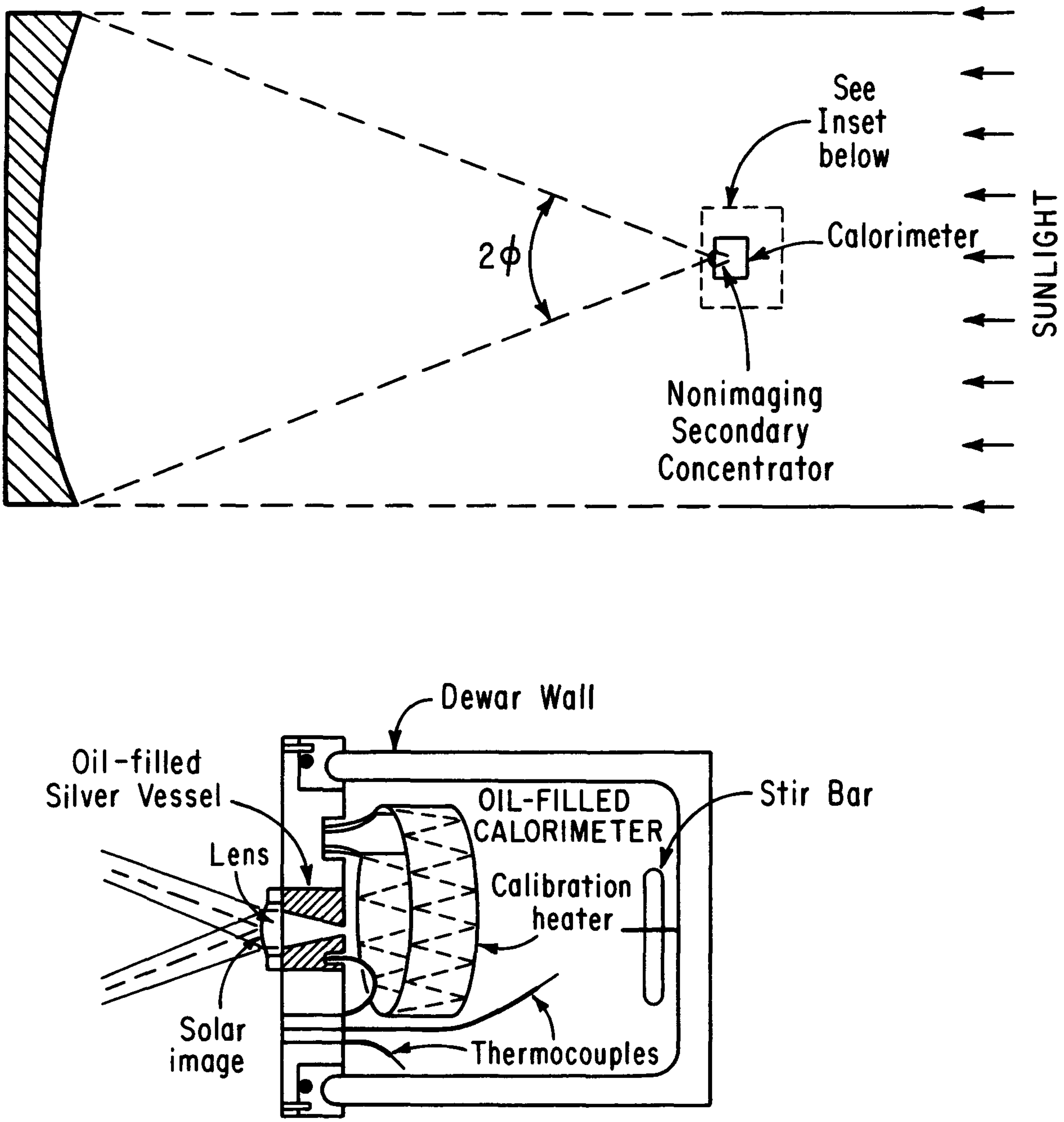

Fig. 4. Two-stage concentrator with refracting nonimaging secondary. Oil-filled Dewar calorimeter (insert) measures the flux by comparison with a calibrated electrical heater.

Abstract

SOLAR INDUCED SURFACE TRANSFORMATION OF MATERIALS (SISTM)

J. R. Pitts, J. T. Stanley
Solar Energy Research Institute
Golden, CO 80401-3393

C. L. Fields
University of Northern Colorado
Greeley, CO 80639

Highly concentrated solar energy provides a controllable means of delivering large flux densities (>1 MW/m^2) of broadband radiation to solid surfaces. This incident photon flux and/or the resulting thermal energy can cause phase changes, atomic migrations, chemical reactions, and melting on surfaces without greatly perturbing the bulk properties of the materials. Such changes in surface properties may be useful in a broad spectrum of technologically significant applications, may conserve strategic materials as well as energy, and high solar fluxes may offer competitive alternatives to conventional thermal processes (e.g., those using lasers and arc lamps). Consequently, research into non-electric applications of highly concentrated solar flux is receiving increased emphasis in the Solar Thermal Research Program of the USDOE. Researchers at the Solar Energy Research Institute (SERI) have studied the use of high solar fluxes to form high value metallurgical coatings on various substrates of technological interest. Progress to date includes transformation hardening of tool steels, melting and diffusion bonding of hard facing coatings from powders, and the formation of high temperature corrosion and wear-resistant coatings. The results of this research and open areas for related research are presented.

Possibilities for SISTM

- Highly concentrated solar radiation (>100 W/cm^2) can be used as a a pulsed heat source for modification of material properties.

- Fundamental physical considerations indicate that the highest value product per unit energy ($/kWh) will be obtained for processes that modify surfaces (or coat them with thin films).

Several interesting surface modifications have been demonstrated as viable processes for appropriately designed solar furnaces.

- Phase transformation hardening
- Cladding of corrosion resistant and/or wear-resistant materials from powders
- Deposition of high-tech films and coatings from vapor phase reactions
- Diffusion bonding and/or reaction and cladding of pre-deposited films
- initiation of self-propagating high temperature reactions

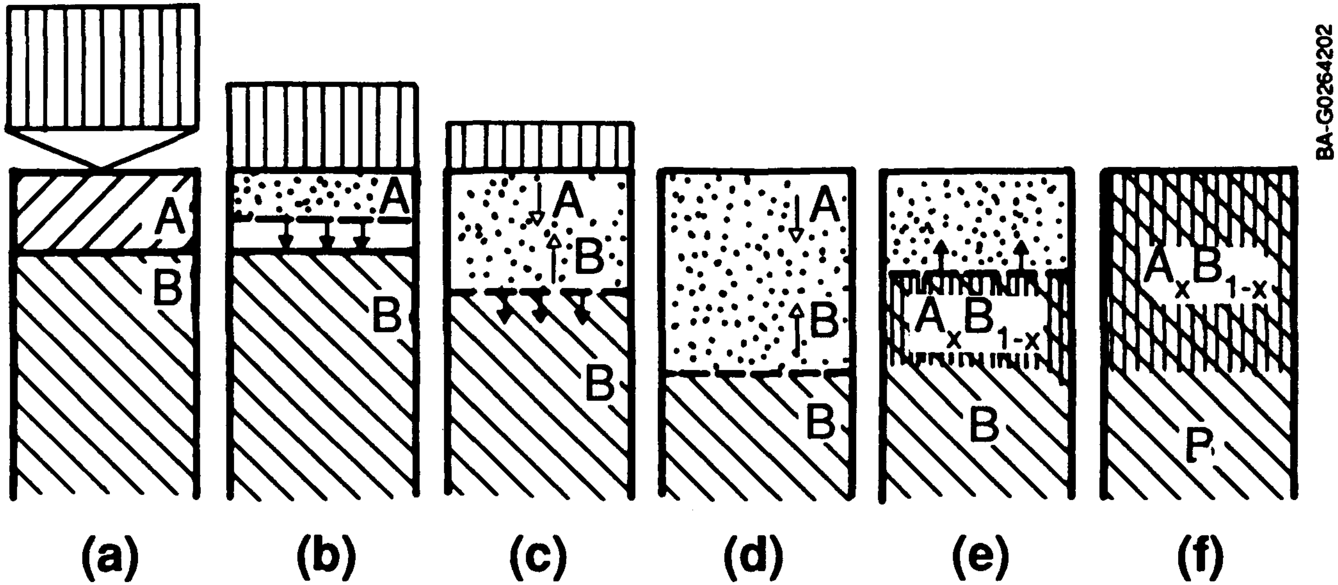
A
B
A
B
A
B
B
A
B
B
A
A_xB_{1-x}
B
A_xB_{1-x}
P
(a)
(b)
(c)
(d)
(e)
(f)
BA-G0264202

EXAMPLES OF SOME SYSTEMS EXPOSED IN THE SOLAR FURNACE

Sample System		Exposure Conditions			
Substrate	Coating	Flux (W/cm^2)	Max. Temp. (C^o)	Time$^{(s)}$	Comments
4340 Steel	None	200	1250	6	Hardened, minor warping and scaling.
A2 Steel	None	200	1203	5	Major warping and scaling.
4340 Steel	AlSi(1)	200	>1000	10	Did not wet surface. Formed small balls of melted material.
Titanium	None	150	1195	15	N$_2$ gas shroud used. Oxidation extensive.
A2 Steel	Hard(2)	100	1098	15	Powder melted and coated surface.
4340 Steel	Corrosion(3)	200	1367	4	Most of powder fell off. What remained melted to form shiny coating.
Titanium	2Ni:1Al(4)	150	>1512	9	SHS initialed at 8s. Extensive melting on surface.
Molybdenum	3Ni:1Al(4)	150	--	30	Melted but oxidized and fell off as sample cooled.
4340 Steel	2Ni:3Al(5)	200	685	15	At least two circular reaction zones.
Molybdenum	1Ti:2B(4)	200	>1360	10	Most of powder fell off. SHS produced glassy, black deposit.

---

(1) Commercial Powder (88% Al, 12% Si)
(2) Commercial Powder (3.81% B, 0.856% C, 13.81% Cr, 4.71% Fe, 74.0% Ni, 4.30% Si)
(3) Commercial Powder (4.56% Al, 93.7% Ni, 1.63% organic solids)
(4) Powder Mixtures
(5) Sputtered Layers

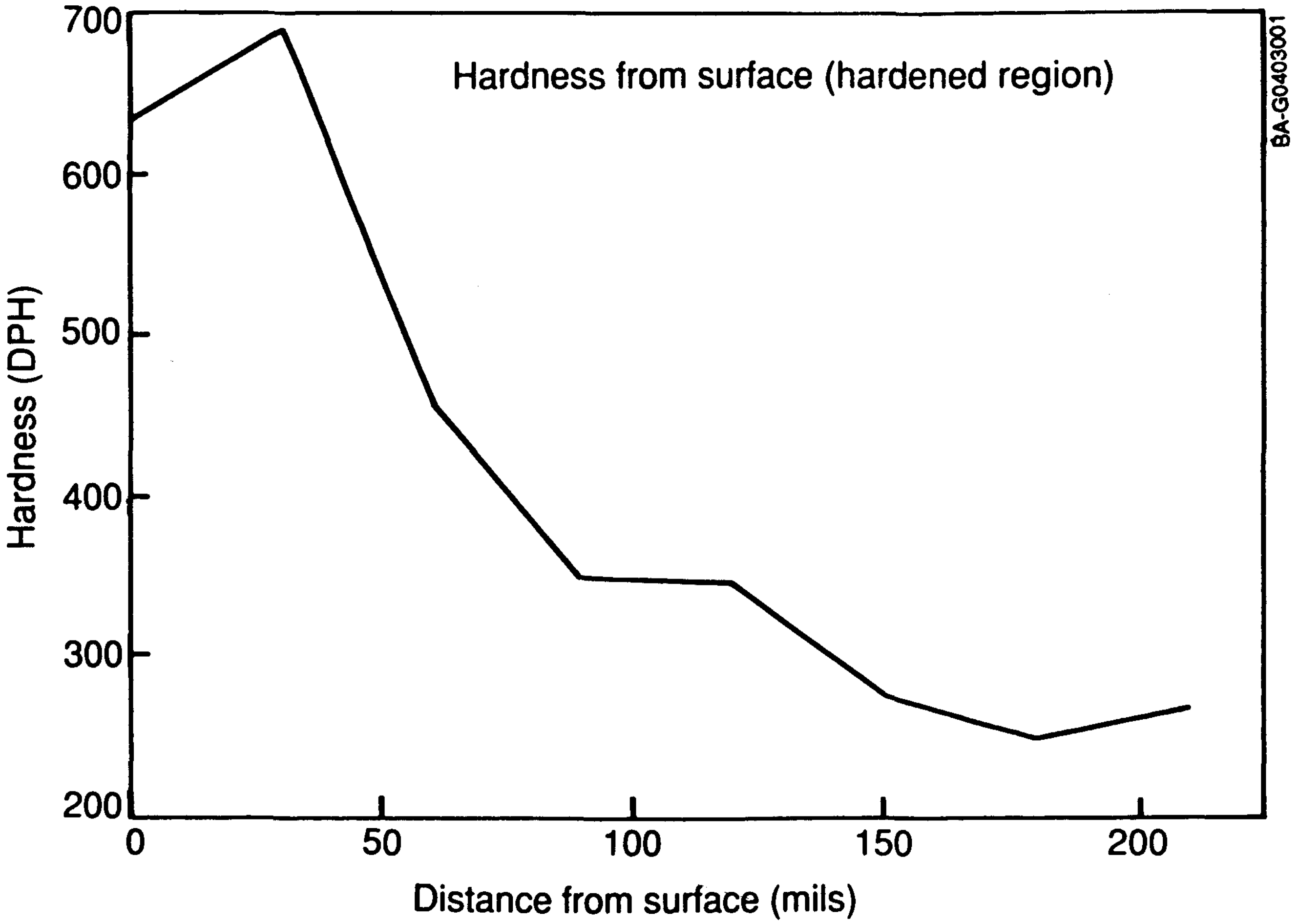
Hardness from surface (hardened region)
Hardness (DPH)
700
600
500
400
300
200
0
50
100
150
200
Distance from surface (mils)
BA-G0403001

Micrograph (1000X) of a commercial hard facing coating melted and diffusion bonded to A2 steel.

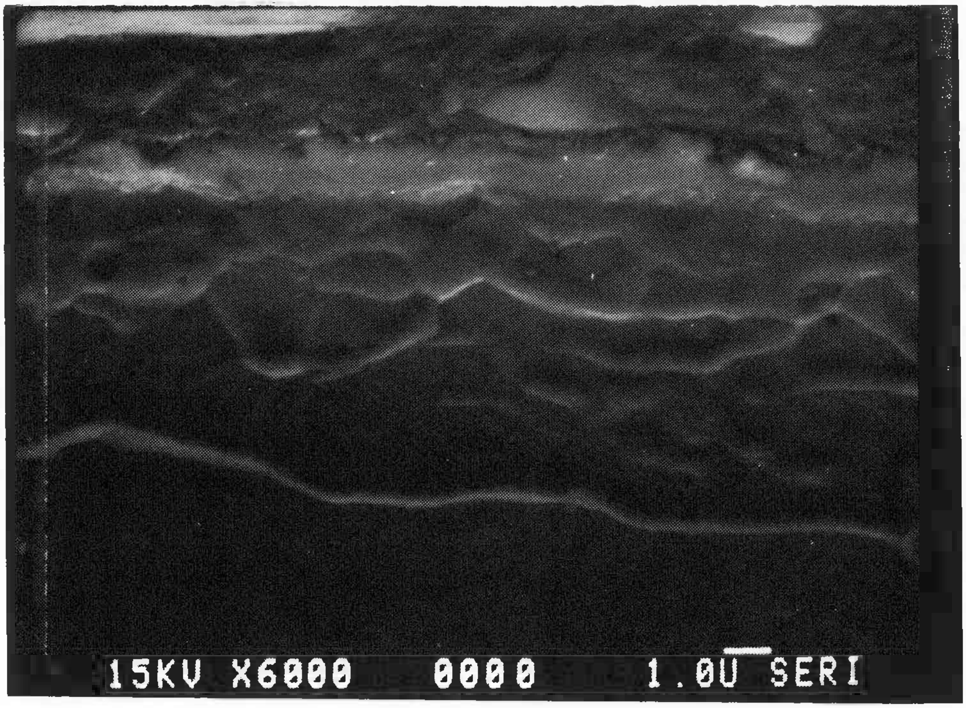

SEM of Ni and Al layers (vacuum deposited) after reaction to form nickel aluminide on Fe substrate. Note depth of penetration of heat affected zone.

Opportunities for Research and Development

- Zone melt recrystallization
- Rapid Thermal Annealing
- Joining of materials
- Photolytic effects

Opportunities for Technology Development

- Detailed code for thermal profile for shaped beams/pulses
- Design tools for specific applications (or how to build the right furnace for the job)
- Articulation and tracking of beam and sample table for computer-aided manufacturing

Summary of Positive Aspects of Solar Furnace

- Large deliverable energy
- Large area capability
- Clean energy source
  (no greenhouse gases, no CFCs)
- Process flexibility
- Cold wall reactor
  (for thin film deposition)
- No heat rejection facilities required
- Photolytically enhanced reactions possible
  (no extra charge)
- Energy efficient
  (energy where you want it, no conversion losses)

SOLAR TREATMENT OF CARBON FIBERS

D.J. O'Neil, P.M. Hawley, and J.D. Shutt
Solar Thermal Advanced Research Center
Energy and Materials Sciences Laboratory
Georgia Tech Research Institute
Georgia Institute of Technology
Atlanta, GA 30332

ABSTRACT

In a continuing program to demonstrate the application of ultra-highflux solar photothermochemical processing to advanced and strategic materials (high-temperature ceramics, whiskers, and alloys, etc.) the Solar Thermal Advanced Research Center (STARC) at the Georgia Tech Research Institute has successfully developed a proprietary process for the treatment of commercial carbon fibers and conversion to fibers possessing unusual and attractive properties.

In a non-reactive environment, carbon fibers retain their strength, modulus and other mechanical properties to temperatures higher than those tolerated by other high temperature materials. They are used extensively, therefore, by the aerospace and defense industries, in particular, as reinforcements for advanced composite materials where the matrix may be a polymer, ceramic, metal or carbon itself. Carbon fiber composites are critical strategic components of the Space Shuttle, the National Aerospace Plane, and space telescopes, for example.

A serious limitation is that carbon reacts with oxygen, burning away rapidly at temperatures as low as 500°C. There is a national research thrust to enhance the oxidation resistance of advanced carbon materials.

GTRI-STARC research has demonstrated that several properties including the oxidation resistance of carbon fibers can be dramatically increased via treatment with hyperthermal fluxes of concentrated solar radiation.

PHOTO-ASSISTED SOLAR THERMAL REACTIONS

W.E. Wentworth, C.F. Batten, Jeng-Neng Chen,
Maani Hammada, and Wei Gong
Chemistry Department
University of Houston
Houston, TX 77204-5641

ABSTRACT

The objective of this research project is to carry out chemical reactions using highly concentrated solar energy directed into the reaction medium. Most chemical reactants do not absorb a significant portion of the solar radiation and for this reason we have elected to absorb the solar energy in a solid catalyst on which the reactants are adsorbed. By proper selection of catalysts the entire solar spectrum can be absorbed in the reaction medium. This mode of introducing the energy into the catalyst directly can lead to different products and product distributions compared to the thermal reaction where the thermal energy is introduced into the chemical reactants and then transferred to the catalyst bed.

In order to use the solar spectrum efficiently, radiation of all wavelengths should be utilized. The solar spectrum contains ~3.4% of its energy in the UV region which potentially could be used to break a chemical bond by a photochemical process. In addition some of the higher energy photons in the visible region (39.4%) could be used for this purpose. The near infrared region (35.3% to 1100 nm) could be used to excite higher vibrational levels in the catalyst which should promote its catalytic activity. The longer wavelemgth radiation in the infrared region (21.9%) could be converted to thermal energy to carry out any subsequent propagation steps. In order to ascertain the contribution of different portions of the solar spectrum, we use UV cutoff filters to remove successive portions of the short wavelength radiation and observe the effect on the reaction rate and product distribution (see overhead #4). A water filter (see overhead #3 for absorption spectra) can be used to remove the infrared region with wavelengths greater than 1100 nm. This would remove the radiation that would serve as the heat source. Elimination of this infrared enhances the UV photoeffect by minimizing any competing thermal reactions.

The xenon lamp contains an elliptical mirror (f= 2.5) which gives a focal point of 3-4mm and a maximum flux density on the order of 100w/cm^2. However, the catalyst bed (diameter ~ 7mm) can be illuminated uniformly by placing the bed ~3cm closer to the lamp. At this position the flux density varies by less than 5% over an 8mm diameter with a flux density of 42w/cm^2.

The reaction of 2-propanol to give propene and acetone has been used to evaluate photocatalytic activity. The catalyst 1%V_2O_5/SiO_2 is photocatalytic towards the formation of propene but not towards acetone. This is demonstrated by removal of successive portions of the UV radiation, as shown in overheads #5 and #6. The photocatalytic step is thought to be an H atom abstraction from a CH_3 group. From other experimental studies we estimate that the photocatalytic H atom abstraction can break a C-H bond in the range $104 > D_{C\text{-}H} > 99$ kcal/mole.

V_2O_5 on various types of SiO_2 and SiO_2 -Al_2O_3 supports has been used for photoassisted hydrocarbon reforming/cracking reactions. Presence of Al_2O_3 in the support favored the cracking of hexane in lieu of reforming to benzene, as shown in overhead #7. V_2O_5 on silica supports give the greatest selectivity for benzene, but there are variations with different forms of silica. The cracking of hexane shows the greatest selectivity towards ethene when V_2O_5 is supported on natural quartz. Selectivities for ethene on the order of 55-60% are obtained, as shown in overhead #8. Also note the great differtence in product distribution compared to the thermal reaction.

Recent studies have used mixed oxides as possible catalysts. These have been prepared in another laboratory in the pursuit of synthesizing superconducting material. The superconducting material, $YBa_2Cu_3O_{7\text{-}L}$, is a catalyst for the oxidation of alcohols to aldehydes and ketones, as reported by other investigators. We also observed this catalytic activity in the oxidation of 2-propanol to acetone. No propene was produced with this catalyst which is in contrast to the reaction over V_2O_5. Because of this unique catalytic activity towards alcohols, we have studied the reaction of hexane over this catalyst. Indeed we find a high selectivity towards benzene and this seems to be enhanced by using radiation with wavelengths less than 1100 nm (see overhead #9). This was not observed with the catalyst V_2O_5/SiO_2. Presently we are investigating synthesis reactions in which a n-hydrocarbon (C_6 or greater) is reacted with another compound which will yield substituted benzenes, which are of high economic value. Since $YBa_2Cu_3O_{7\text{-}L}$ photocatalyzes the dehydro-cyclization of hexane to benzene, it also may be an effective catalyst in the synthesis reactions.

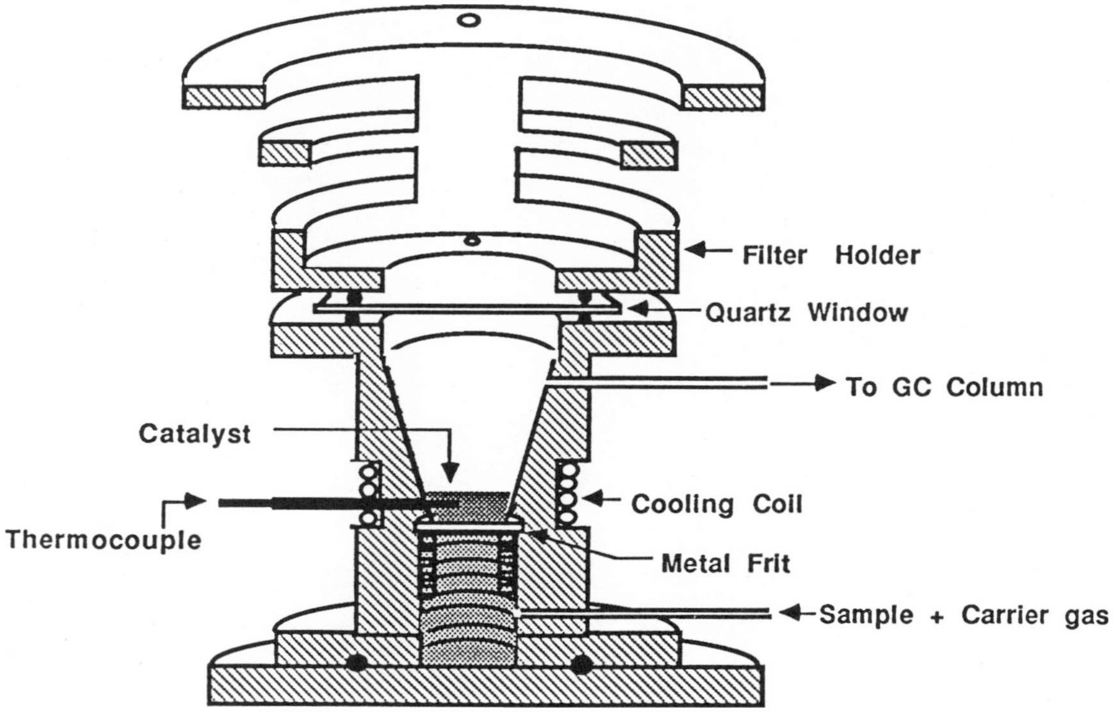
Filter Holder
Quartz Window
To GC Column
Catalyst
Cooling Coil
Thermocouple
Metal Frit
Sample + Carrier gas

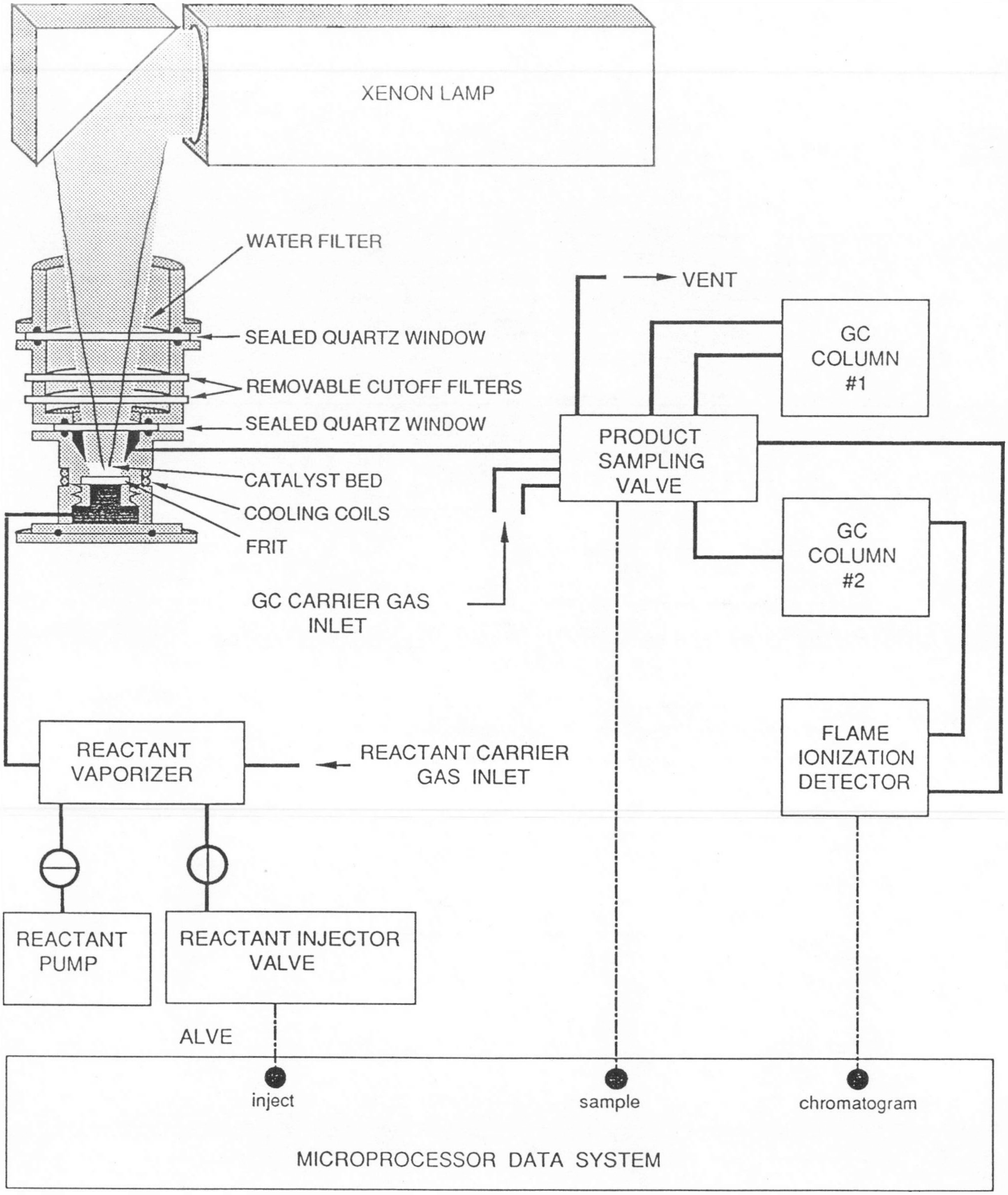

. Reactor, light source, sample inlet system, and gas chromatographic analytical system used for study of photoassisted chemical reactions.

Xenon Lamp and Solar Emission Spectra

% Transmission for Water Filter (4cm path)

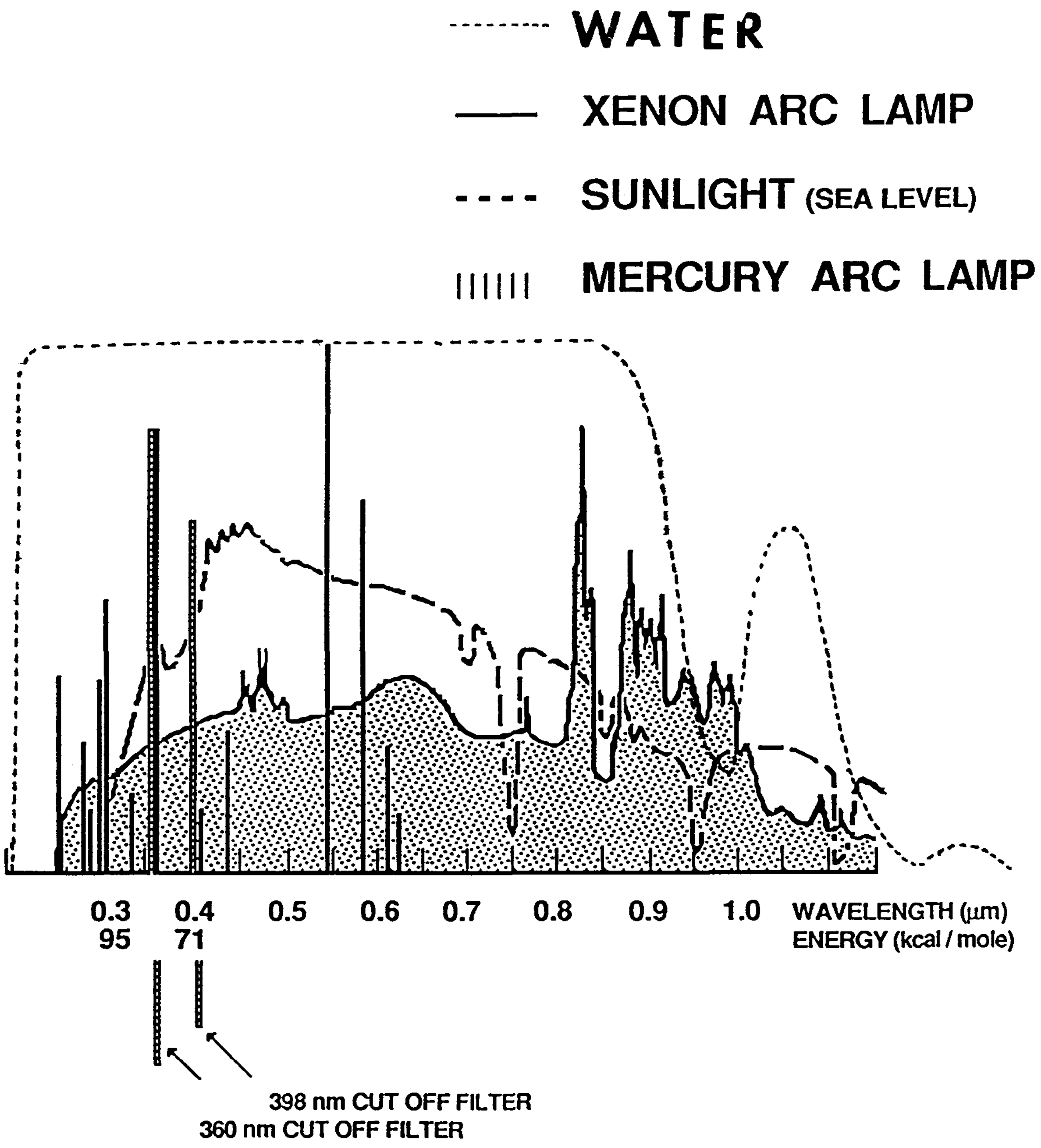

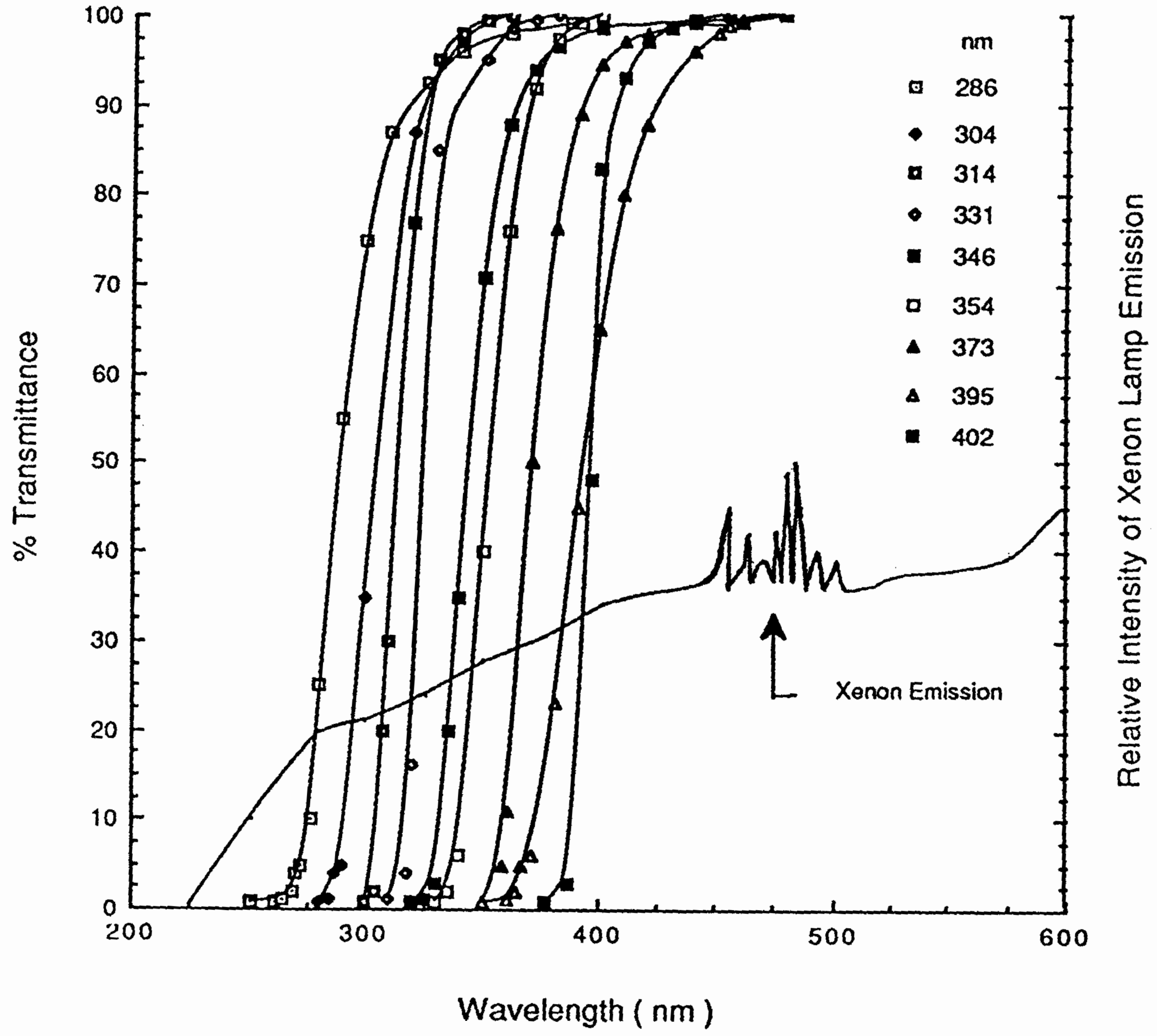

100
90
80
70
60
50
40
30
20
10
0
200
300
400
500
600
% Transmittance
Wavelength (nm)
Relative Intensity of Xenon Lamp Emission
nm
286
304
314
331
346
354
373
395
402
Xenon Emission

Reaction of 2-propanol over 1% V_2O_5/SiO_2

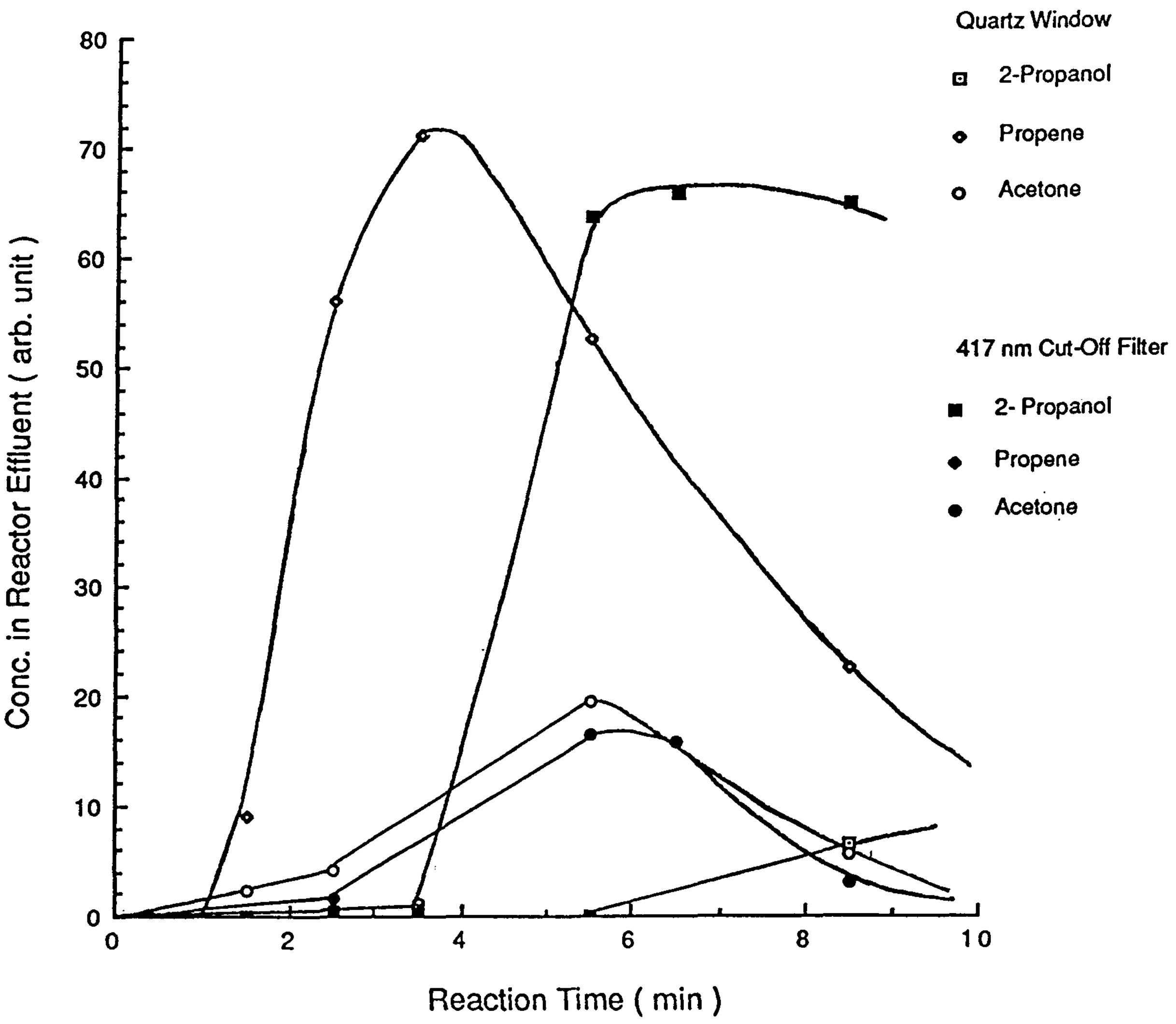

Dependence of Propene Formation on UV Radiation of Xenon Lamp Emission

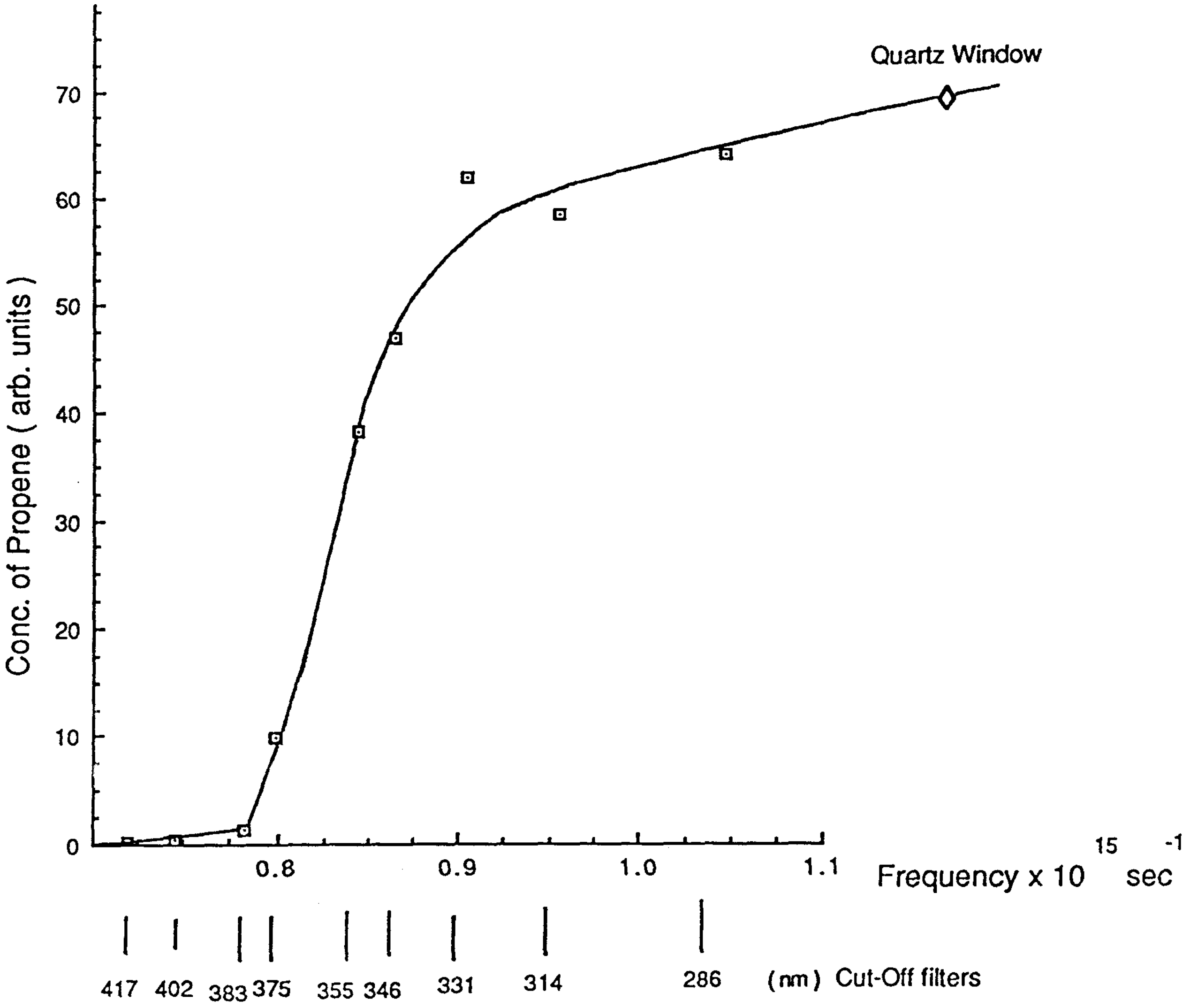

EFFECT OF CATALYST SUPPORT ON V_2O_5 PHOTOCATALYTIC REFORMING OF HEXANE

Parameter	Parameter Value		
Reactant:	hexane*	hexane*	hexane*
Reactant Formula:	n-C_6H_{14}	n-C_6H_{14}	n-C_6H_{14}
Catalyst:	3% V_2O_5	3% V_2O_5	3% V_2O_5
Catalyst Support:	25% Al_2O_3/SiO_2	13% Al_2O_3/SiO_2	pure SiO_2
Support Partical Size (µm):	65	60	75-88
Cat. + Sup. Weight (g):	0.0813	0.0823	0.0833
Carrier Gas:	argon**	argon**	argon**
Carrier Flow Rate (cm^3/min):	10.2	10.2	10.4
Sampling Time (min):	1.5	1.5	1.5
Lamp Electrical Input (W):	492	488.3	493
Lamp Optical Output (W):	14.3	14.2	14.3
Percent Conversion:	71	84.98	96

Reaction Product	Weight Percent Yield Under Above Conditions		
Methane (CH_4)	22.35	25.48	25.30
Ethane (C_2H_6)	2.72	2.94	1.64
Ethene (C_2H_4)	41.89	43.43	14.17
Propane (C_3H_8)	-	0.50	-
Propene (C_3H_6)	8.12	7.06	1.42
isoButane (C_4H_{10})	1.64	1.65	1.2
Butane (C_4H_{10})	-	-	-
isoButene (C_4H_8)	1.45	1.37	-
Butenes or Branched C_5's	2.26	2.21	0.64
Benzene	21.09	15.89	55.61

* Data obtained using 1.5 µl pulsed injections of reactant.

** Catalyst bed was regenerated between each run by switching carrier gas to pure oxygen at 30 cm^3/min.

Comparison between the Photo- and Thermal Reaction of Hexane over 7% V_2O_5/quartz powder at the Same % Conversion and the Same Sample

Parameter	Parameter Value	
Reactant:	hexane*	hexane*
Catalyst:	7% V_2O_5	7% V_2O_5
Catalyst Support:	quartz/powder	quartz/powder
Support Partical Size (μm):	-	-
Cat. + Sup. Weight (g):	0.133	0.133
Carrier Gas:	argon**	argon**
Carrier Flow Rate (cm^3/min):	10.2 cc/min.	10.2 cc/min.
Sampling Time (min):	0.6	0.6
Lamp Electrical Input (W):	381	-
Bed Temperature:°C	-	625
Optical Power at Bed Surface (W):	11	-
Percent Conversion:	63	63

Reaction Product	Weight Percent Yield Under Above Conditions	
Methane (CH_4)	18.68	12.25
Ethane (C_2H_6)	2.74	2.81
Ethene (C_2H_4)	57.44	21.44
Propane (C_3H_8)	0.57	0.4
Propene (C_3H_6)	8.58	12.38
IsoButane (C_4H_{10})	3.35	-
Butane (C_4H_{10})	-	-
IsoButene (C_4H_8)	1.84	4.08
Butenes or Branched C_5's	2.25	4.31
C_6 isomers	1.92	0.6
Benzene	2.62	37.12
Toluene	-	1.16

---

* Data obtained using 1.5 μl pulsed injections of reactant.

** Catalyst bed was regenerated between each run by switching carrier gas to pure oxygen at 30 cm^3/min.

REACTION OF N-HEXANE OVER $BaCuO_2$, $YBa_2Cu_3O_{7-L}$

Parameter	Parameter Value							
Catalyst:	$BaCuO_2$	$BaCuO_2$	$YBa_2Cu_3O_{7-L}$		$YBa_2Cu_3O_{7-L}$		$YBa_2Cu_3O_{7-L}$	
Carrier Gas:	He	He	He	He	He	He	He	He
Carrier Flow Rate (cm^3/min):	10	10	10	10	10	10	10	10
Water Filter:	YES	NO	YES	NO	NO	NO	-------	-------
Catalyst Bed Temperature** (°C):	400	750	420	480	420	385	515	635
Sampling Time (min):	integerate	integerate	integerate	integerate	integerate	integerate	integerate	integerate
Lamp Electrical Input (W):	1000w	750w	1000w	750w	700w	600w	-------	-------
Optical Power at Bed Surface (W):								
Optical Filter (50% cutoff in nm):	Quartz	Quartz	Quartz	Quartz	Quartz	Quartz	Quartz	Quartz
Percent Conversion:	4.1	12.4	32.0	79.0	45.5	10.9	74.3	100

Reaction Product	Weight Percent Yield Under Above Conditions							
Methane	10.8	14.8	5.7	22.1	20.7	14.1	19.4	32.1
Ethane	2.1	4.3	1.2	3.1	3.1	3.2	2.5	0.9
Ethylene	43.4	54.5	27.3	64.1	54.1	29.8	34.6	52.4
Propene	25.5	15.6	5.0	5.5	8.7	12.0	27.3	1.8
Isobutylene	18.2	10.3	1.8	1.1	1.5	3.3	5.6	1.4
Isobutane	0	0	0	0	0	0	0	0
Benzene	0	0	59.0	4.1	8.7	33.1	10.6	11.4
C_5 isomer	0	0	0	0	0	0	0	0
C_6 isomer	0	0	0	0	3.2	4.5	0	0

* Data obtained using 2 µl pulsed injections of reactant. All catalyst / supports were calcined in O_2 for 5 hours. Catalyst bed was regenerated between each injection by switching carrier gas to pure oxygen at 30 cm^3/min.

** For photo - assisted reactions this is the temperature of thermocouple placed just below the upper surface of the bed.

SESSION 3

CONCENTRATORS

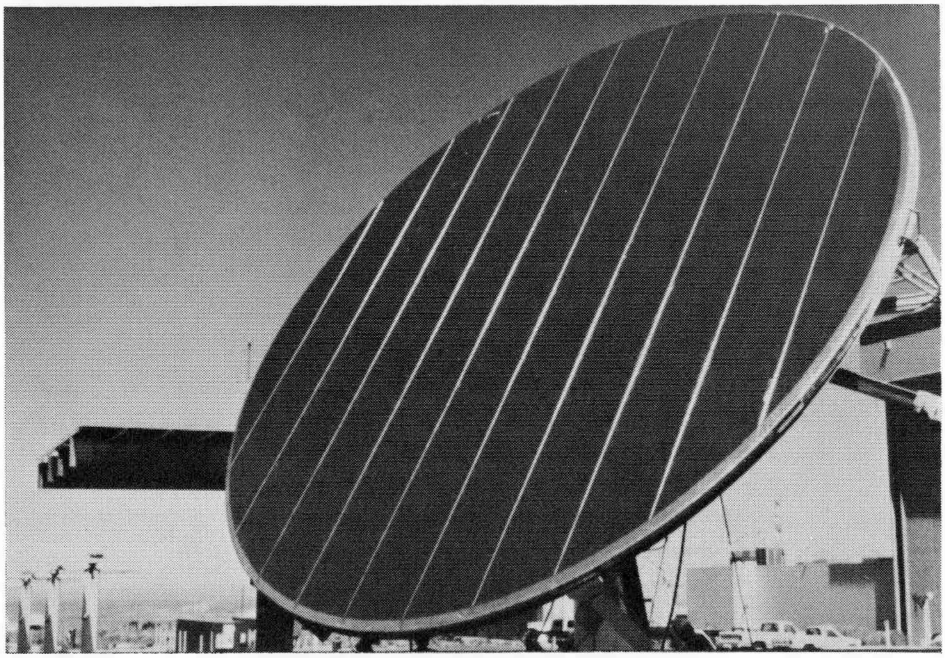

Stretched-Membrane Heliostat

By

Andrew Konnerth III

Solar Kinetics, Inc.
10635 King William Dr.
Dallas, TX 75220

Solar Kinetics, Inc. (SKI) has enhanced stretched-membrane heliostat technology through two contracts under Sandia National Laboratories. A prototype optical element was successfully installed at the Central Receiver Test Facility in 1986. The design has since been improved and a second prototype is scheduled for installation in early 1989.

Stretched-membrane heliostats achieve high structural efficiency (low mass per unit aperture) by the nature of the concept. Two highly tensioned membranes are attached to a ring with a slight vacuum inducing the focusing contour of the front membrane. The membranes are structurally coupled to the ring and allow each component to remain stable under large loads, thus using the material more efficiently. Several significant design improvements have been implemented in the second heliostat. These improvements will increase performance and structural efficiency and decrease manufacturing complexity and cost.

STRETCHED MEMBRANE HELIOSTAT CONCEPT

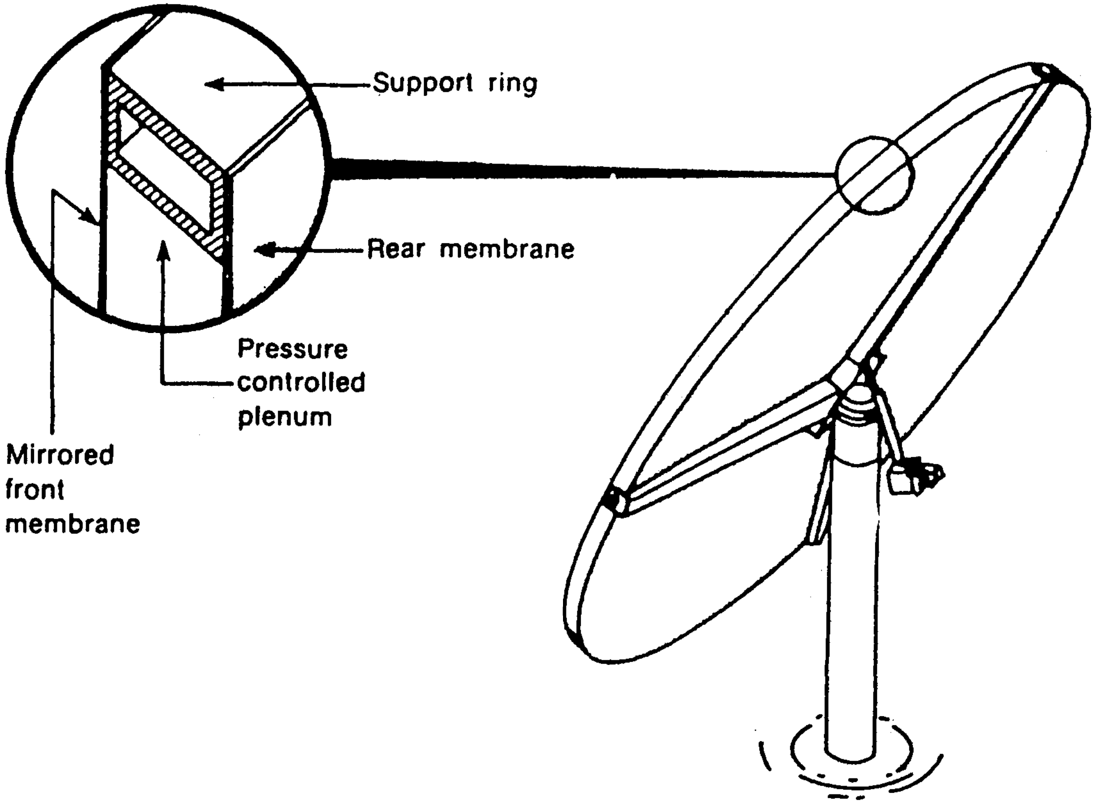

STRETCHED MEMBRANE CONCEPT

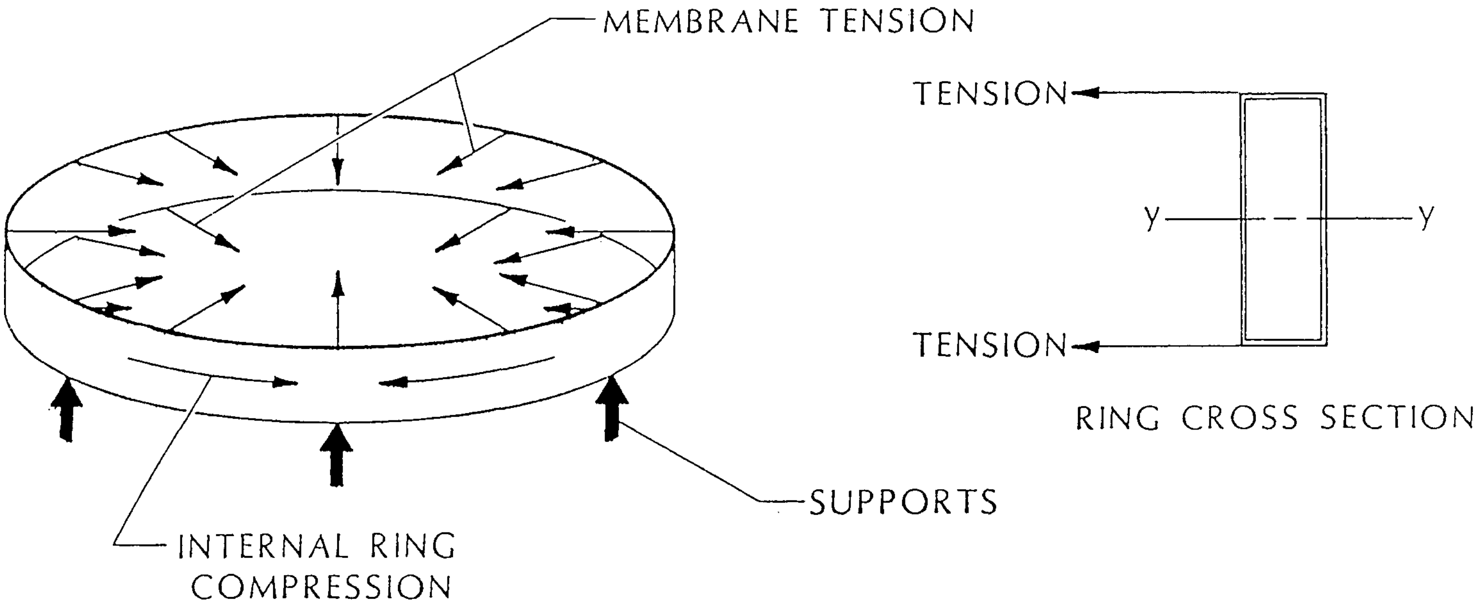

- AXIAL COMPRESSION IN RING AS REACTION TO MEMBRANE TENSION
- MEMBRANE INCREASES IN-PLANE STABILITY
- MEMBRANE INCREASES OUT-OF-PLANE STIFFNESS & STABILITY
  - DEFLECTION ACCOMPANIED BY ROLL
  - ROLL RESISTED BY MEMBRANES

SOLAR KINETICS INC.

OPTICAL ELEMENT

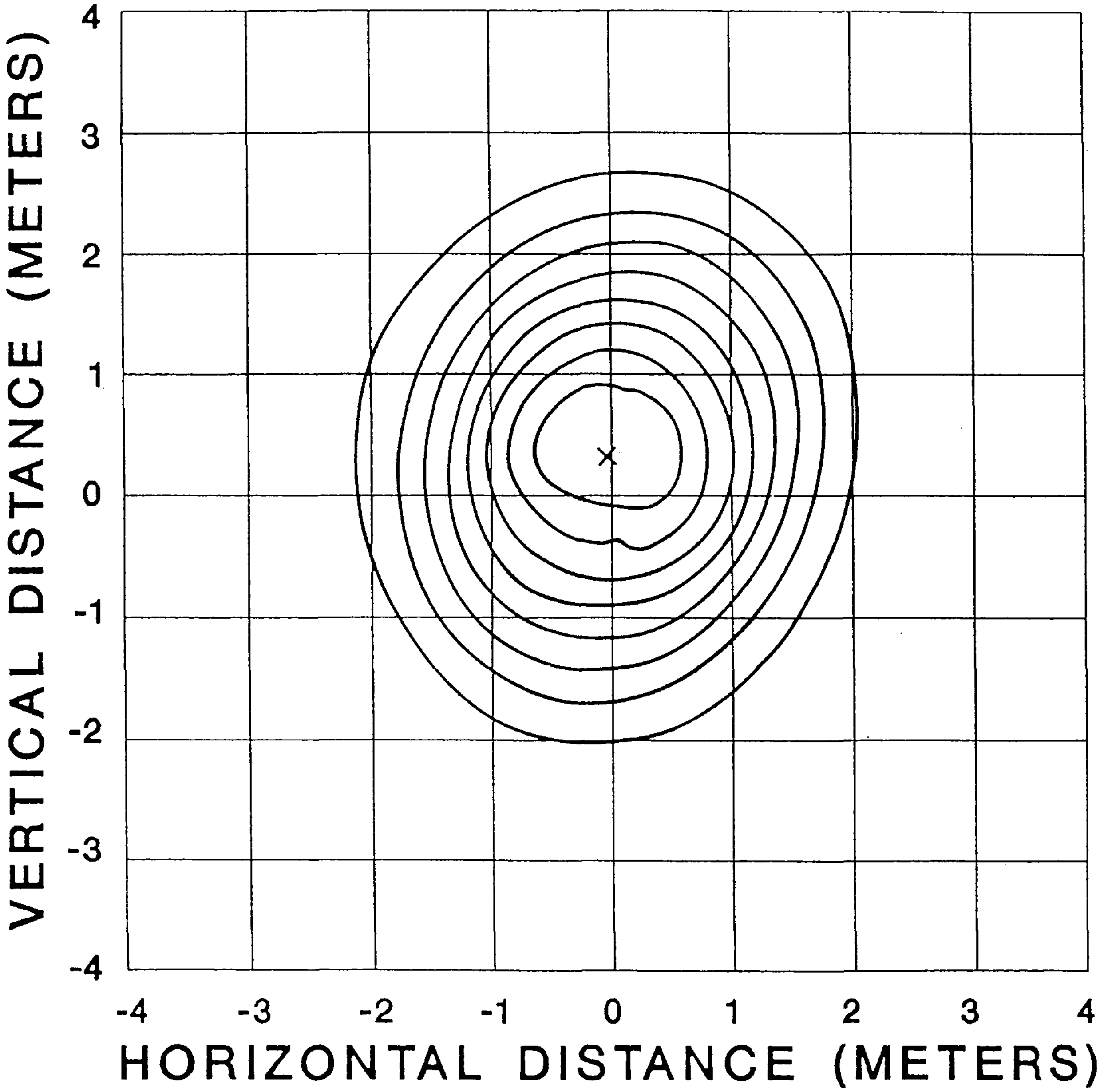

Figure 8. Example of measured flux contours of the beam spot from SKI's 50-square-meter stretched-membrane mirror module. Contour spacing is 0.5 kW/square meters. As measured by SNLA, SAND88-2620.

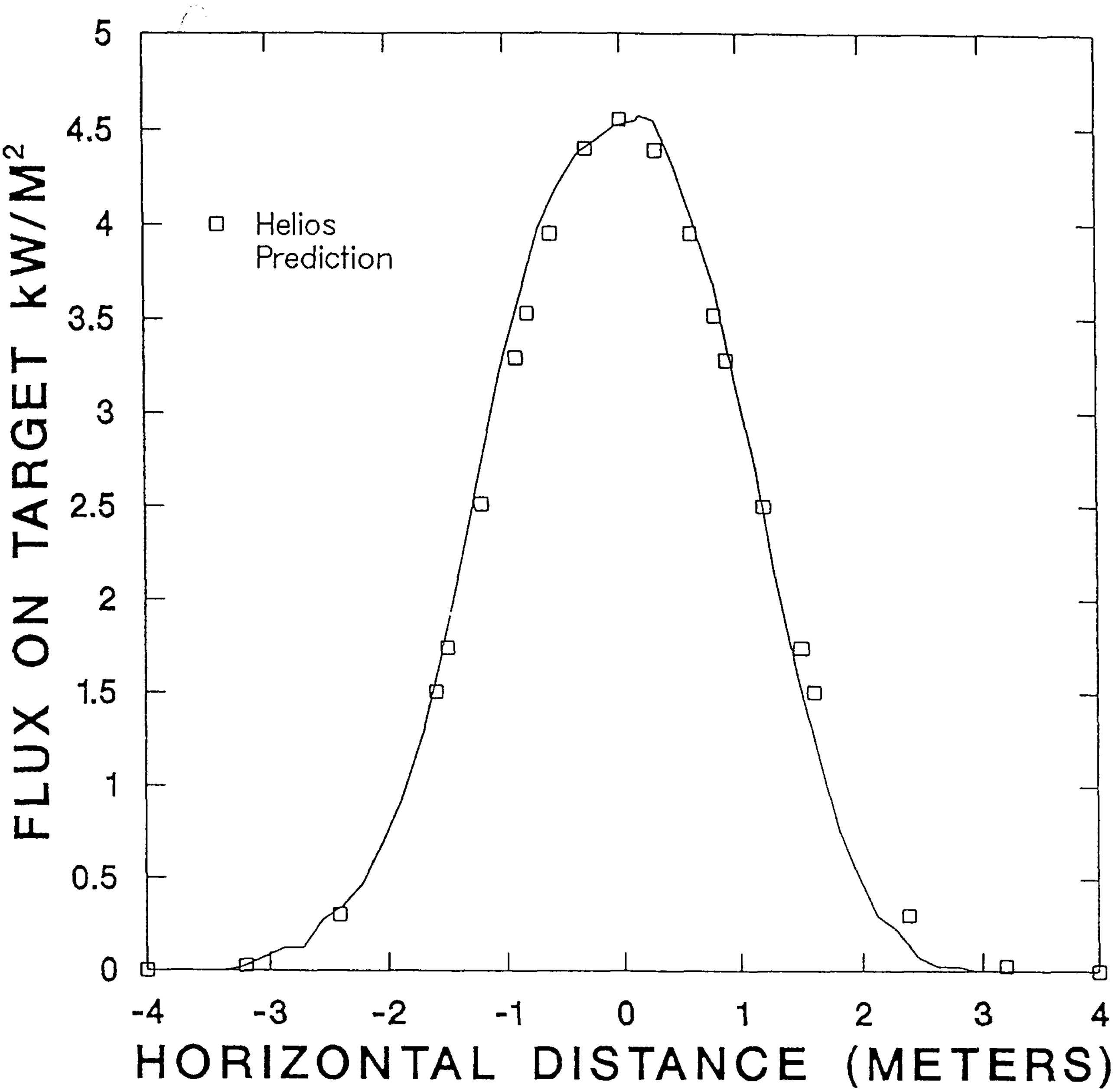

Figure 10. Measured horizontal beam profile through the centroid of Figure 7 compared with the theoretical profile calculated with HELIOS [18,19] (squares) assuming a beam-dispersion error of 2.6 mr. As measured by SNLA, SAND88-2620.

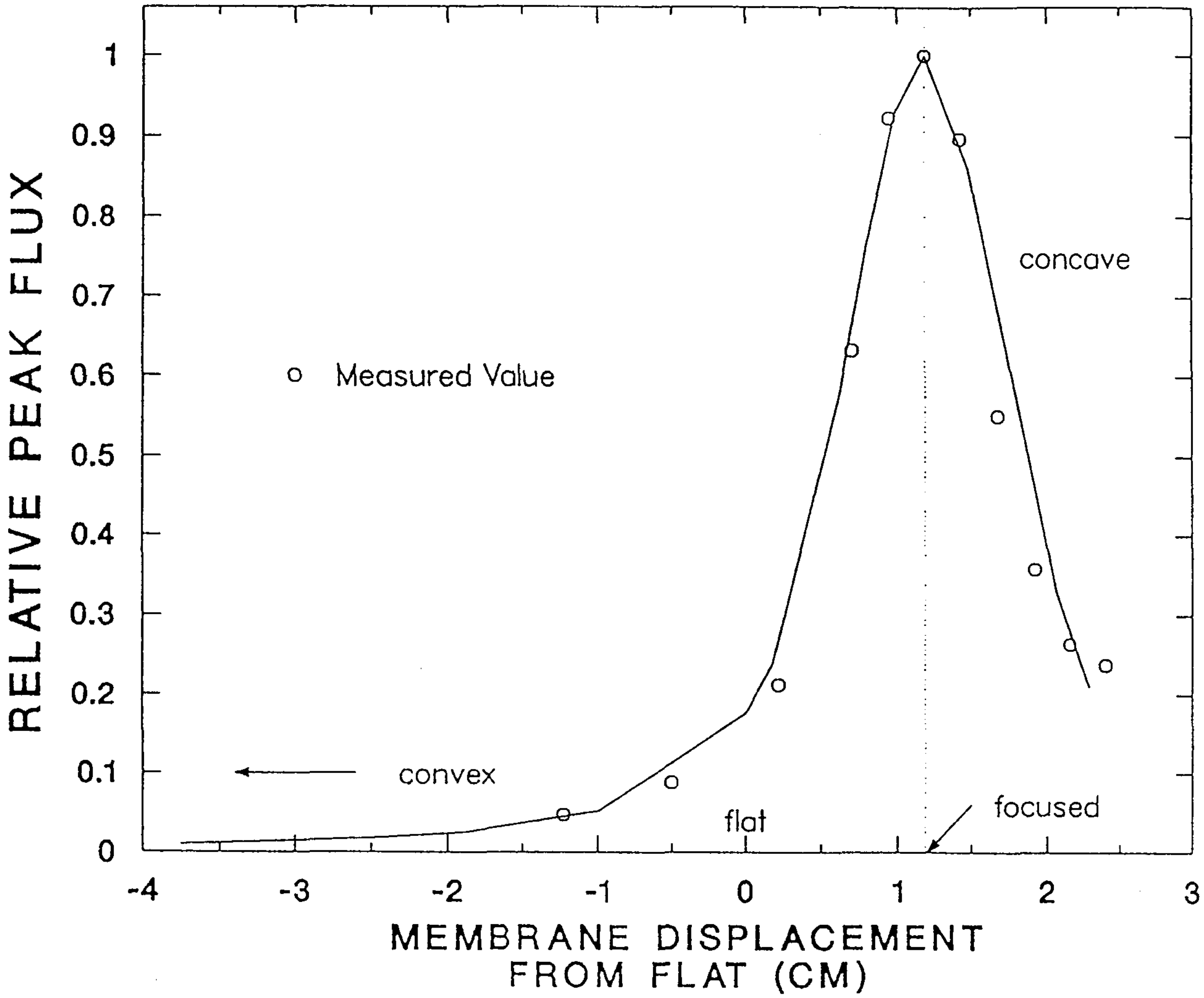

Figure 7. HELIOS [18,19] calculation of the peak flux for an ideal parabola versus displacement of the front membrane. Measured values are shown in circles. As measured by SNLA, SAND 88-2620.

PHASE II IMPROVEMENTS

CENTRAL RESTRAINT

AND FRONT FAN REFERENCE

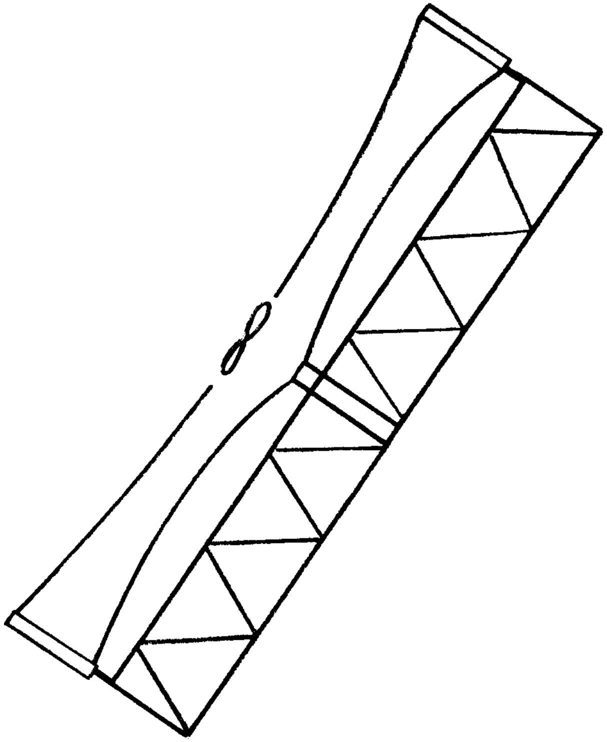

- REDUCES NORMAL LOAD OF RING
- REDUCES DIAPHRAGM STRESS
- DECREASES CONTROL RESPONSE TIME
- DECREASES WIND INDUCED TRANSIENT ERROR

PHASE II IMPROVEMENTS

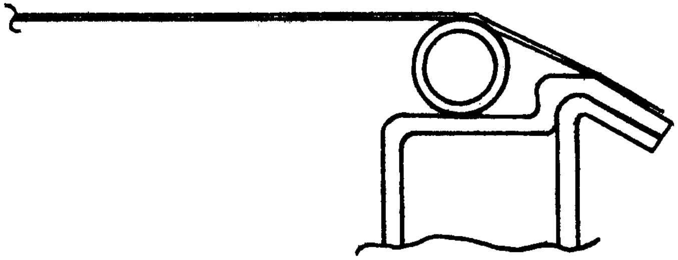

TENSIONING METHOD

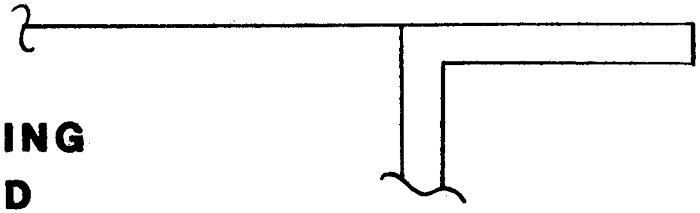

REDUCE COST $>\$1.00/\mathrm{m}^2$

IMPROVED PERCEIVED RELIABILITY

OPEN SECTION RING

DECREASED MANUFACTURING COMPLEXITY

MORE EFFICIENT MATERIAL DISTRIBUTION

ABSTRACT

An Improved Stretched Membrane Heliostat Mirror Module

Kelly J. Beninga
Barry L. Butler

Science Applications International Corporation, San Diego, CA

Science Applications International Corporation (SAIC) has developed an improved stretched-membrane heliostat mirror module under contract to Sandia National Laboratories, Albuquerque, New Mexico. Both a 150-m^2 commercial mirror module and a 50-m^2 prototype mirror module have been designed. The prototype mirror module has been fabricated and is being tested at the Central Receiver Test Facility (CRTF) in Albuquerque. A drawing of the commercial mirror module mounted on the Peerless-Winsmith advanced low-cost drive is shown in **Figure 1**. The commercial mirror-module specifications are shown in **Table 1**. The total area of the mirror module is 150 m^2 with a diameter of 14 meters. Tensioned stainless steel foil membranes are welded to both sides of the carbon steel ring. The ring is supported by five trusses, which radiate from a central hub. The hub is mounted on a pedestal-type drive system for purposes of tracking in the azimuth and the elevation directions. In order to compensate for changes in pressure on the front reflective membrane due to wind forces, an active focus-control system is utilized. The system consists of a LVDT mechanical position indicator that measures the position of the front membrane, and a linear actuator that is attached to a pad on the rear membrane. The linear actuator modulates the position of the rear membrane in order to change the internal volume and therefore, pressure. A refocus valve is included to periodically compensate for air leaks in the mirror module.

The A500B carbon steel ring is made of rectangular tube cross-section with a height of 22.9 cm (9 in) and a width of 7.6 cm (3 in). Its wall thickness is 2.29 mm (.09 in). The dimensions of the ring were determined based on a mirror module with five truss supports and a maximum allowable deflection between supports of 4.2 mm (.165 in) under a 12 m/s (27 mph) wind load. This out-of-plane deflection corresponds to an optical slope error of .60 mrad RMS.

The .0762-mm (.003-in) thick 304L stainless steel membranes are roll-resistance lap-seam welded from 61.0-cm (24-in) wide rolls of stock. The membranes are tensioned to a 89.6 MPa (13,000 psi) stress level. The ring is pre-compressed to 44.8 MPa (6500 psi). The membranes are then welded directly to the ring on the top and bottom surface, as shown in **Figure 2.** Welding of the membranes to the ring is accomplished with a roll-resistance welding head.

The membranes are tensioned prior to welding in a manner that imparts uniform circumferential and radial stress over the surface of the membrane. The rigid attachment to the ring increases the stiffness of the overall mirror module.

The ring stiffness and tolerance achievable by conventional manufacturing methods dictate the ring distortions prior to installation of the mirror module. Once the mirror module is installed, wind loads on the heliostat exert additional out-of-plane loads. The effects of these in-plane and out-of-plane forces on the module have a critical effect on optical mirror accuracy. A comprehensive finite-element computer model of the mirror module was used for the structural design of the ring/membrane system and truss supports. A graphic of the module finite-element model is shown in **Figure 3**. A graphic of the 3-dimensional support truss under wind loading is shown in **Figure 4**. The results of the structural analysis for the commercial design are shown on **Table 2**.

Following the design of the 150-m^2 commercial mirror module, a 50-m^2 prototype mirror module was designed and fabricated. A photograph of the heliostat is shown in **Figure 5**. The prototype design replicates the commercial mirror module design to the extent that it is feasible. The support ring for the prototype module has a 7.9-m (26.0-ft) inside diameter with cross-sectional dimensions of 5.10-cm by 15.2-cm (2-in by 6-in). The membranes are fabricated from 14 strips of 61.0-cm (24-in) wide 304 stainless steel, each of which is .0762 mm (.003 in) thick. ECP-300 reflective film is laminated to the front membrane of the module. Five support trusses radiate from a central hub for support of the ring. The support truss design incorporates a triangular cross-section to provide both in-plane and out-of-plane support for the ring.

The 50-m^2 second-generation prototype stretched-membrane heliostat was assembled and installed at the Central Receiver Test Facility in July 1988. Preliminary test results from the mirror module have shown excellent optical performance and focus-control system performance under calm and gusting wind conditions. A flux contour map, as measured with a beam characterization system at the CRTF, is shown in **Figure 6**. A comparison of the measured beam shape with an analytical prediction generated by the HELIOS computer program has shown that for a reflected cone containing 90% of the reflected energy, the cone half-angle is 1.4 mRad (2.8 mRad full-angle). This indicates that the optical quality of the stretched-membrane mirror module is very good. As shown in **Figure 7**, the time to defocus the image of the mirror module is about 3 to 4 seconds. Additional optical and structural testing of the second-generation prototype mirror module will take place in the next year.

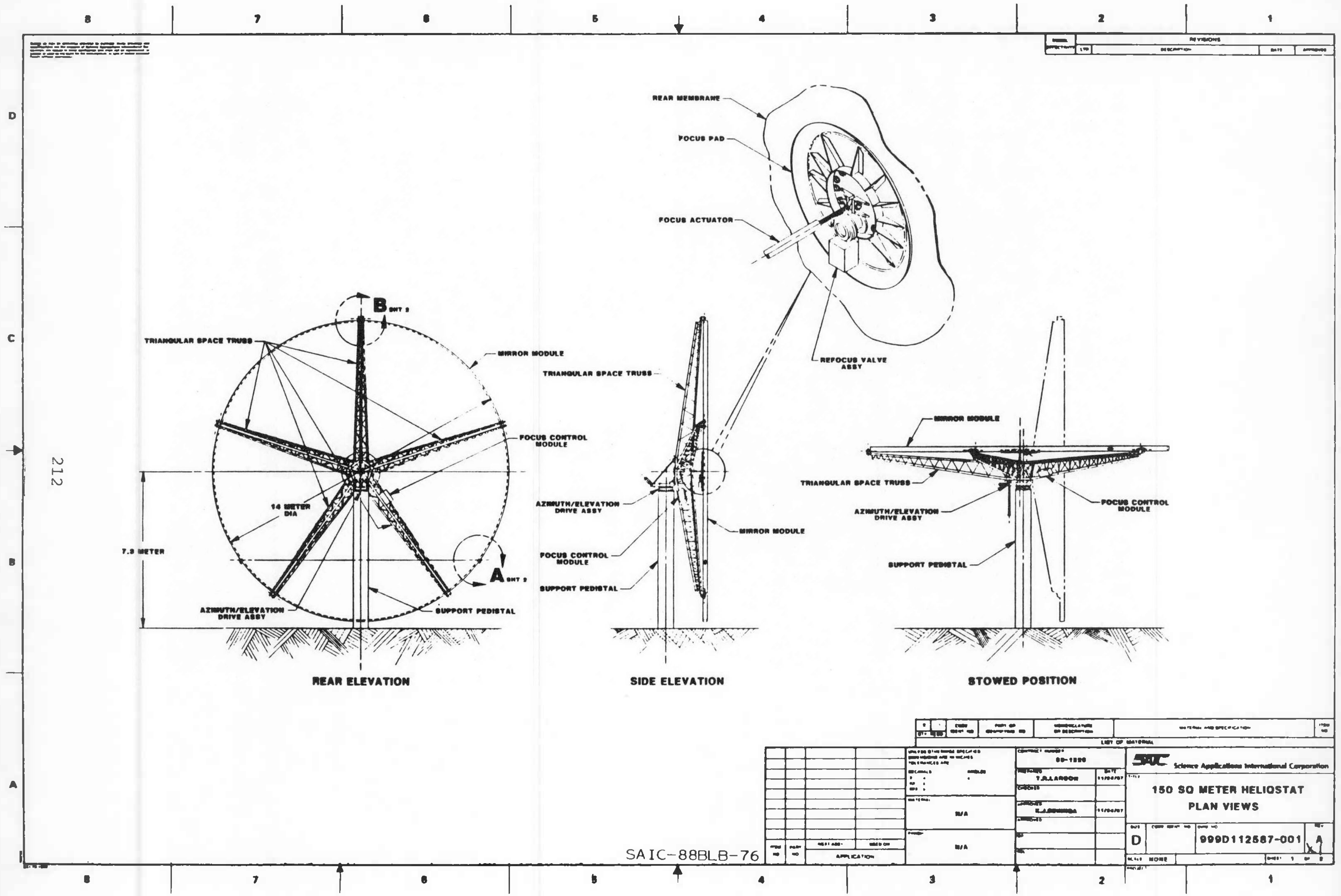

Figure 1. 150 Square Meter Heliostat Plan Views

TABLE 1. COMMERCIAL HELIOSTAT SPECIFICATIONS

Heliostat Diameter	14 m	(46 ft)
Area	154.4 m^2	(1661.9 ft^2)
Reflective Area	148.85 m^2	(1602.2 ft^2)
Support Ring Material	A500B Carbon Steel	A500B Carbon Steel
Support Ring Cross Section	7.62 cm x 22.86 cm	(3 in x 9 in)
Ring Wall Thickness	0.23 cm	(0.09 in)
Ring Cross Sectional Area	13.94 cm^2	(2.16 sq in)
Ring Moment of Inertia - Ix	875.75 cm^4	(21.01 in^4)
Ring Moment of Inertia - Iy	156.92 cm4	(3.77 in^4)
Front Membrane Material	304L Stainless Steel-Annealed	
Back Membrane Material	304L Stainless Steel-Half Hard	
Membrane Thickness	0.008 cm	(0.003 in)
Membrane Preload	6.829 nt/mm	(39 lbs/in)
Membrane Stress	89.64 m Pa	(13000 psi)
Number of Ring Supports	5 Each	5 Each
Span	7.0 m	(23 ft)
Depth of Support at Hub	0.76 m	(30 in)
Depth of Support at Outer Ring	0.305 m	12 (in)
Modulation Pad Diameter	1.83 m	(6 ft)
*Center of Gravity	56.6 cm	(22.3 in)

*Note: Distance From Front Membrane

MEMBRANE TO RING ATTACHMENT

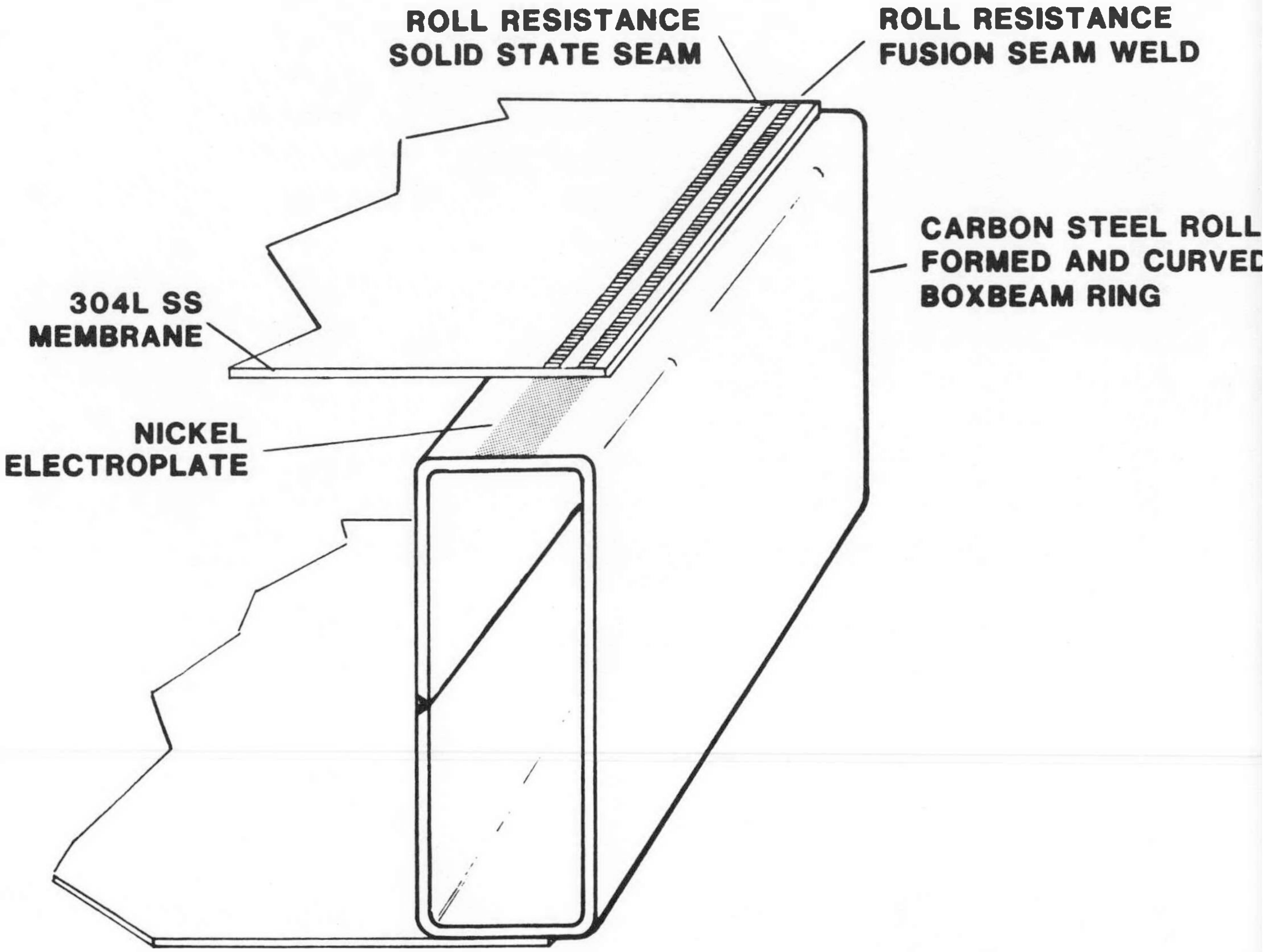

Figure 2. Membrane To Ring Attachment

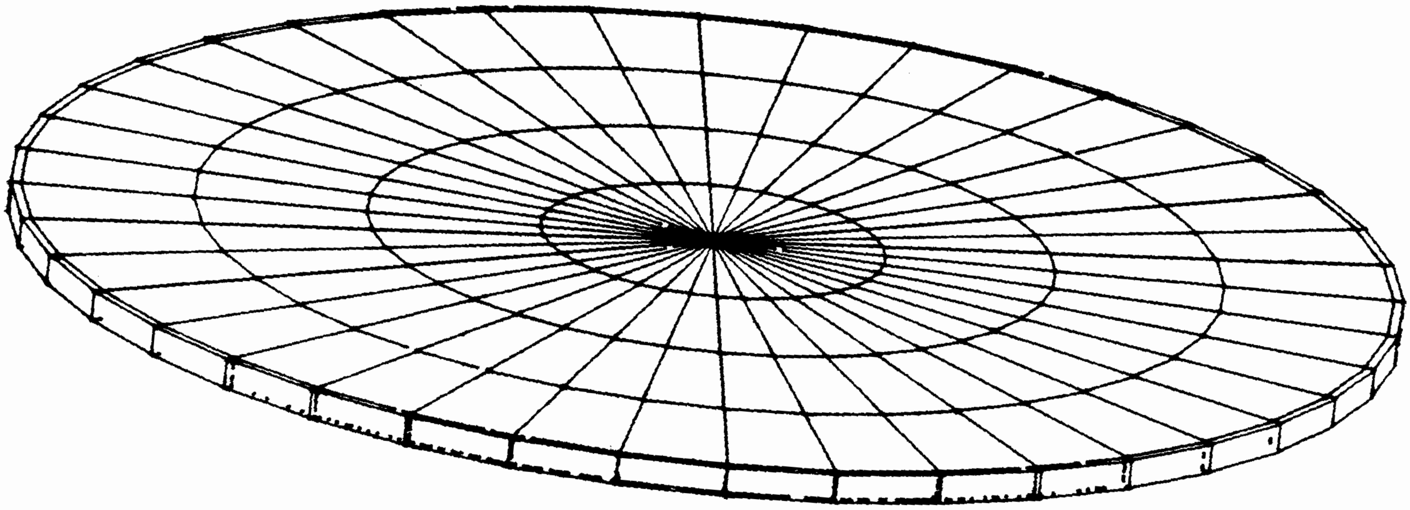

Figure 3. Mirror Module Finite Element Model

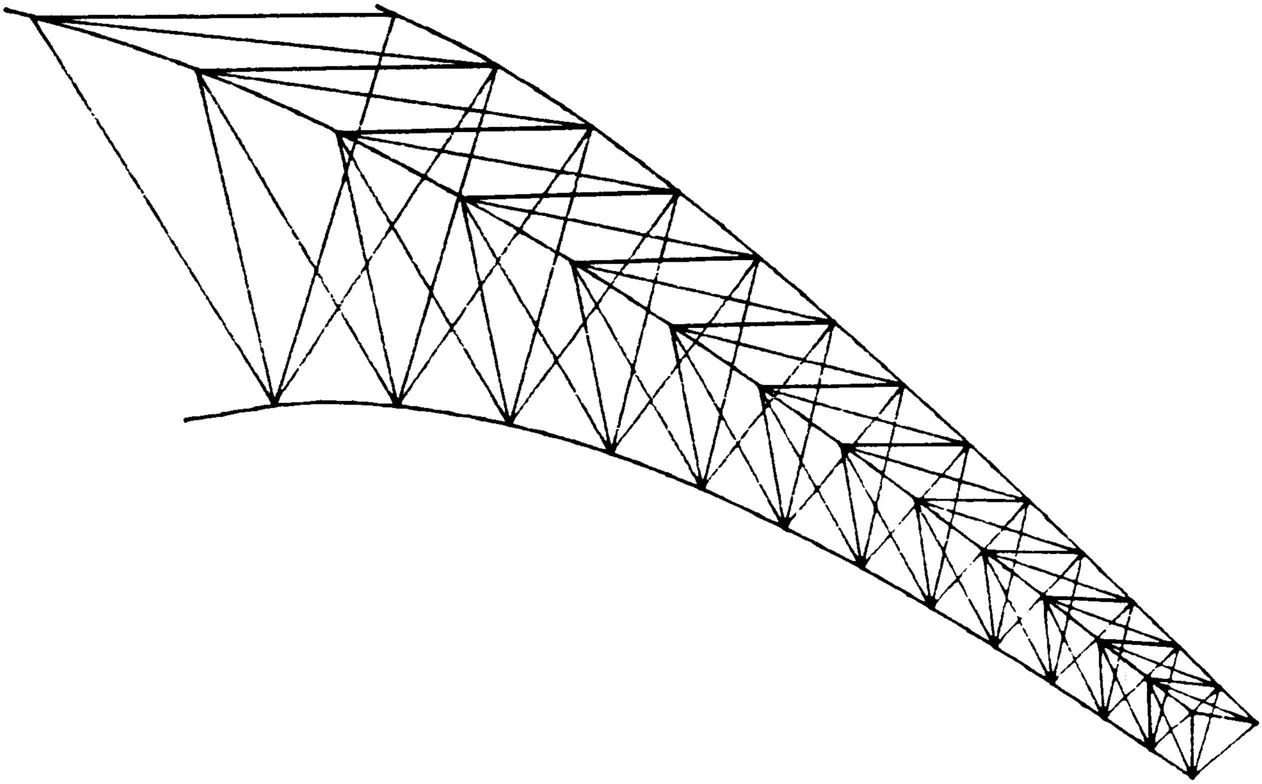

Figure 4. Commercial Design Deformed Triangular Truss

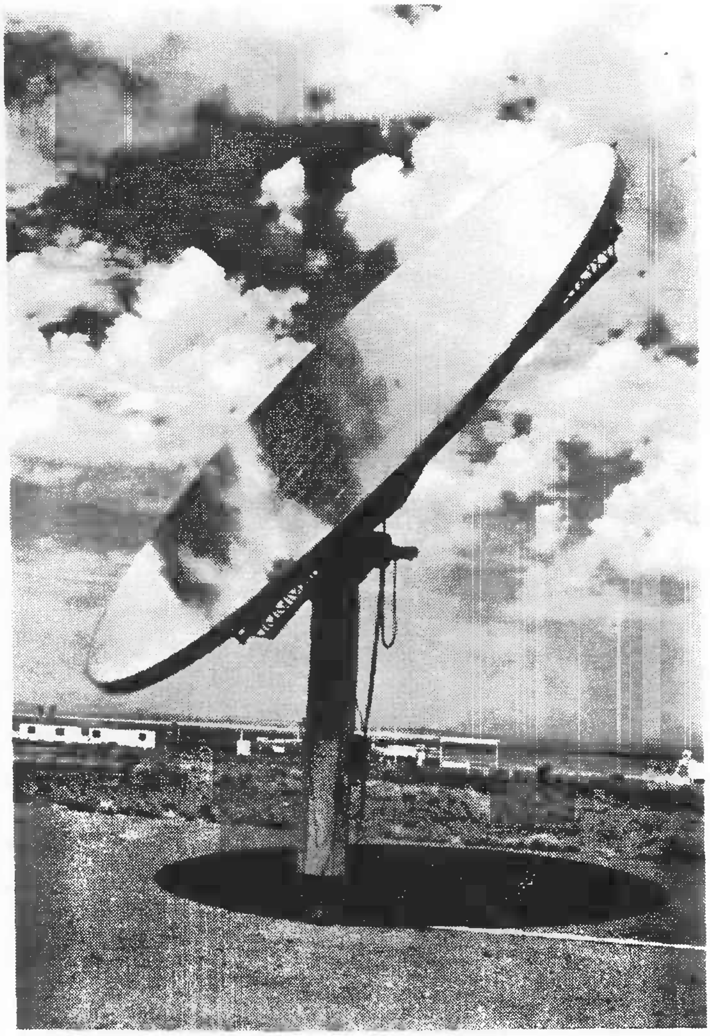

Figure 5. Prototype Heliostat Front View

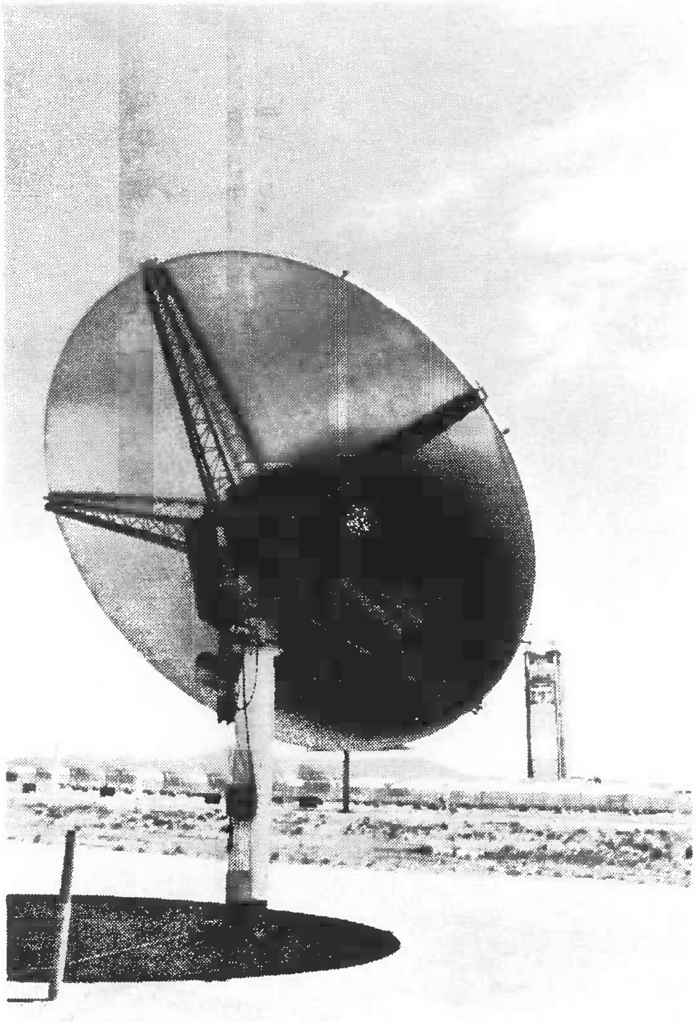

Figure 6. Prototype Heliostat Back View

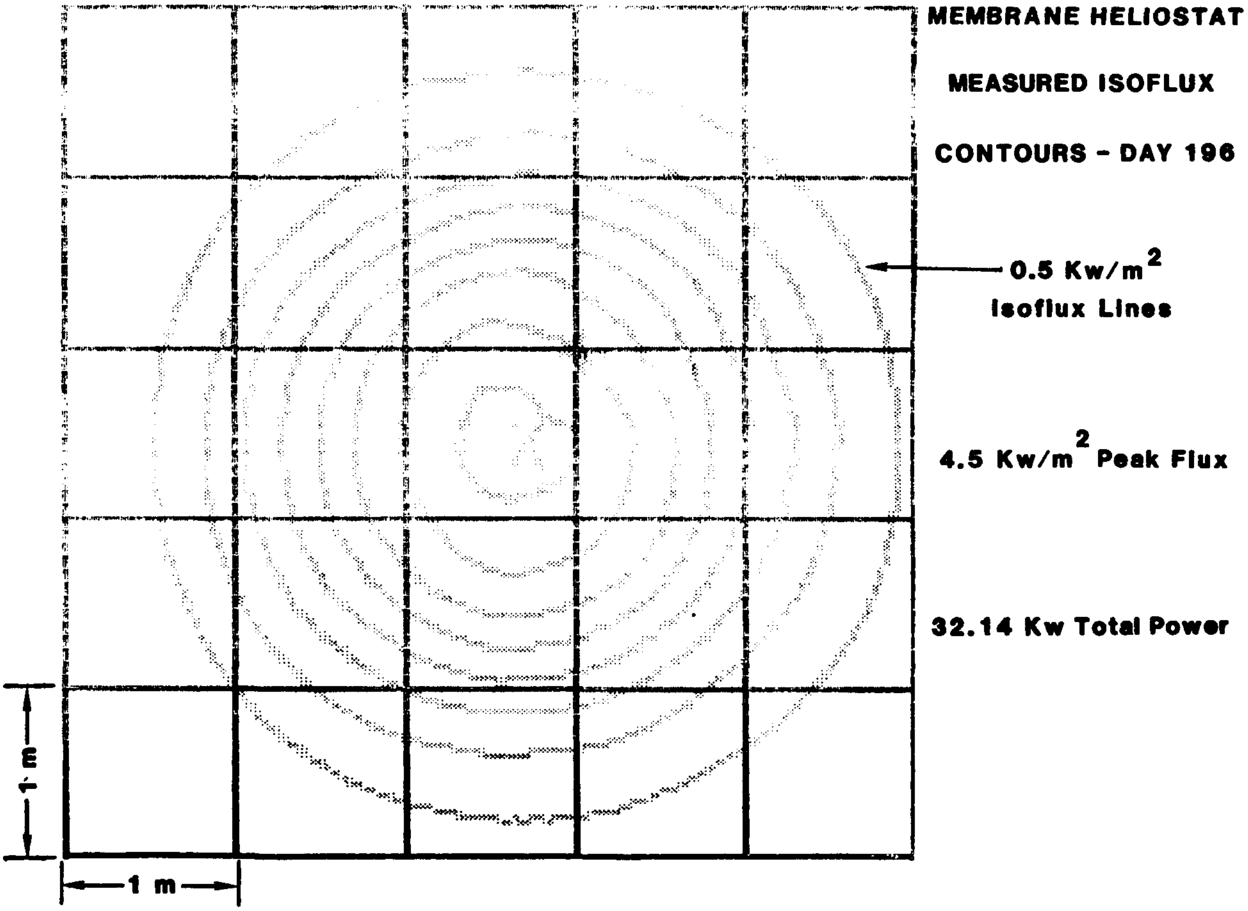

Figure 7. Membrane Heliostat Measured Isoflux Contours - Day 196

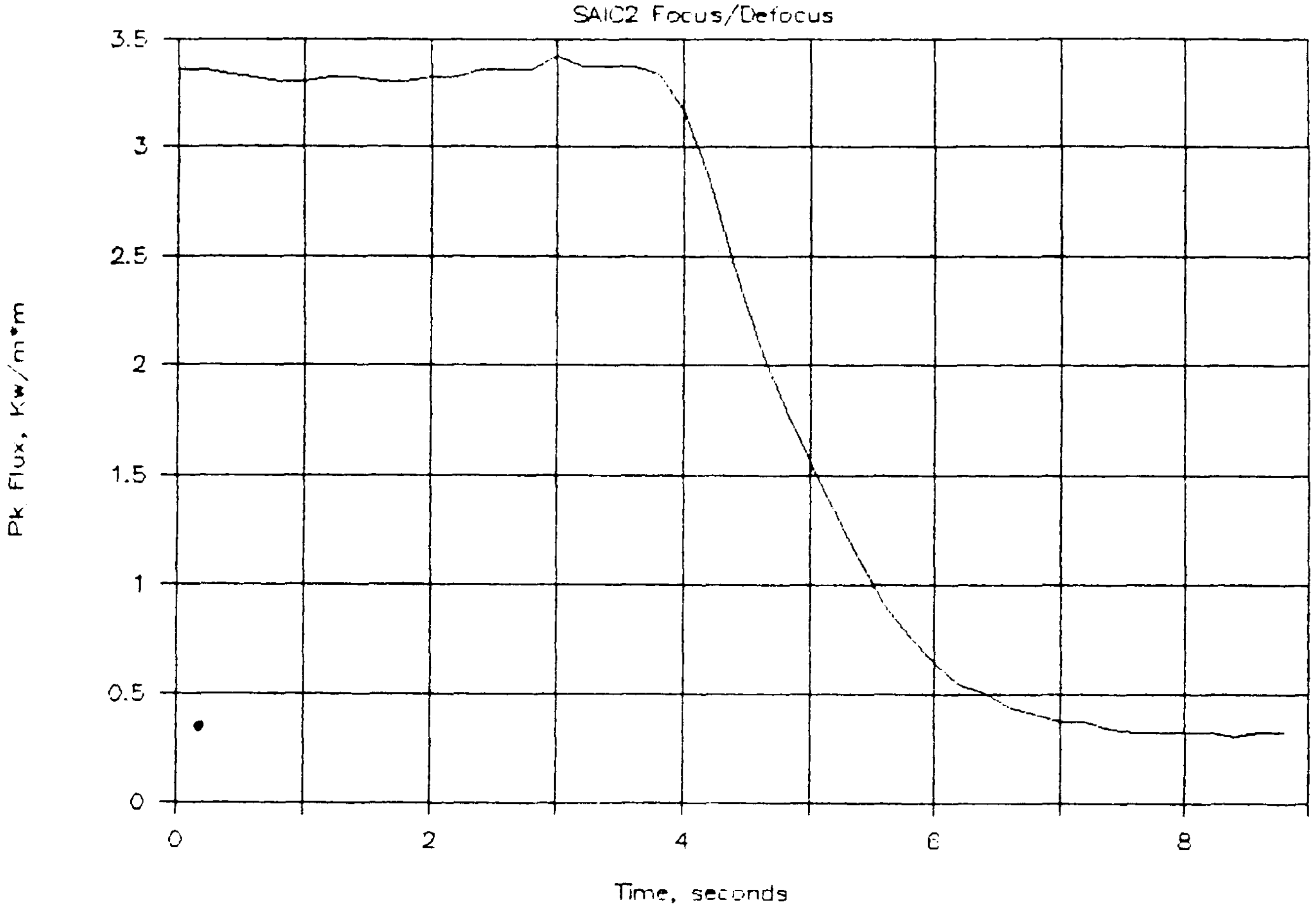

Figure 8. Defocus Time of the Membrane Heliostat

Table 2. Analysis Results for the Commercial Design

● OPERATING CONDITION: 27 MPH WIND	
- MAXIMUM RING DEFLECTION BETWEEN TRUSS SUPPORTS	0.089 IN.
- MAXIMUM RING STRESS	18995 PSI
- MAXIMUM OUT-OF-PLANE TRUSS TIP DEFLECTION	0.384 IN
- MINIMUM OUT-OF-PLANE TRUSS TIP DEFLECTION	0.265 IN
- MAXIMUM DEFLECTION VARIATION BETWEEN ANY TWO TRUSS TIPS	0.119 IN
- MAXIMUM FRONT MEMBRANE STRESS	19141 PSI
- MINIMUM FRONT MEMBRANE STRESS	13000 PSI
_ MAXIMUM REAR MEMBRANE STRESS (OPERATION AT 120^{0}F)	71600 PSI
● SURVIVAL CONDITION: 50 MPH WIND	
- MAXIMUM RING DEFLECTION BETWEEN TRUSS SUPPORTS	0.216 IN
- MAXIMUM RING STRESS	26373 PSI
- MAXIMUM OUT-OF-PLANE TRUSS TIP DEFLECTION	1.29 IN
- MAXIMUM TRUSS STRESS	24050 PSI
- MAXIMUM REAR MEMBRANE STRESS	93120 PSI

DEVELOPMENT OF
A STRETCHED MEMBRANE
POINT FOCUS CONCENTRATOR

BY

Gus Hutchison

Solar Kinetics, Inc.
10635 King William Dr.
Dallas, Texas

Solar Kinetics is involved in the development of a stretched membrane solar point focus concentrator under the supervision of Sandia National Laboratories, Albuquerque, New Mexico. During Phase I of the project, a conceptual design was developed and experiments were conducted on mirror membranes up to 4 meters in diameter.

The concentrator will have a focal length to diameter ratio of .6 (F/D). The reflective assembly is composed of a ring to which a formed parabolic membrane is attached. The ring is rigidized with spoke members, front and rear which terminate at a central column. The reflective surface is a polymer film held against the parabolic surface by a slight vacuum. The tracking assembly is attached directly to the ring and produces a very low wind profile.

Phase II work will include the development and testing of a full scale 100 - 150 square meter integrated concentrator assembly.

Slope errors of less than 2.5mr have been demonstrated and concentrator weights of approximately 6.6lbs/ft. sq. are anticipated.

HUB AND SPOKE SUPPORT

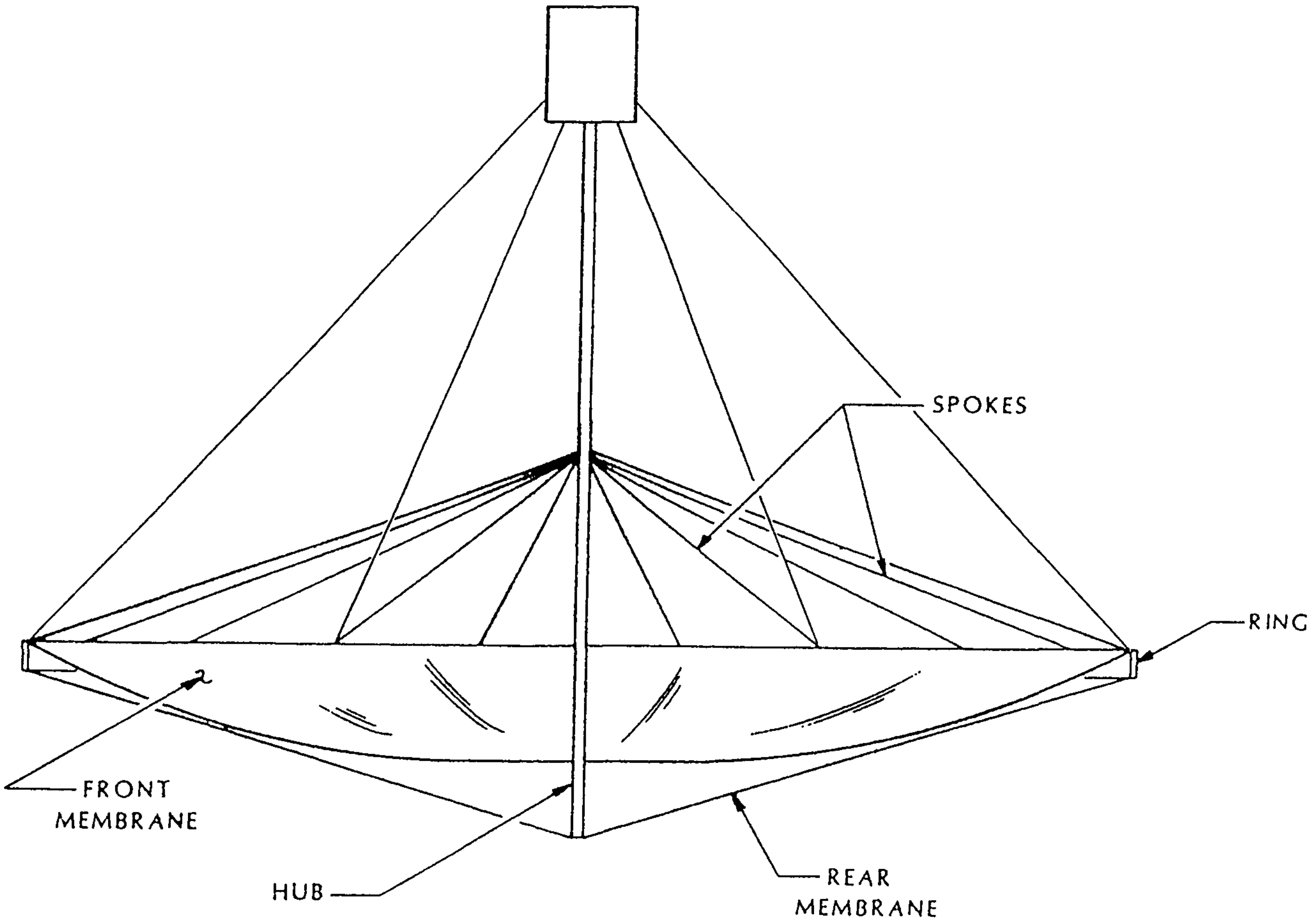

SECTION VIEW

SOLAR KINETICS INC.

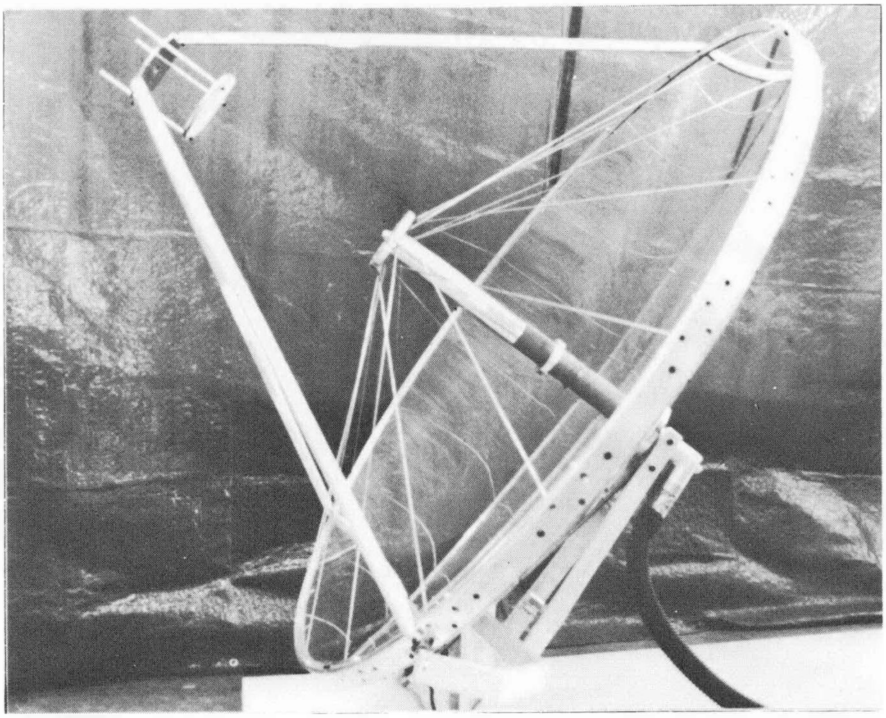

Model of Stretched Membrane Dish Collector
Constructed in Phase I, 1.4m Diameter

HUB AND SPOKE ENHANCEMENT OF RING

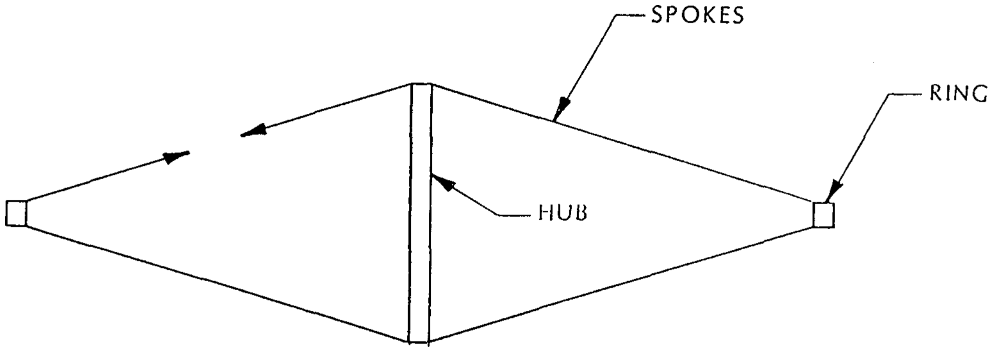

SPOKE TENSION PREVENTS: RING ROLL
OUT-OF-PLANE DEFLECTION
IN-PLANE DEFLECTION

- PROVIDES RADIAL STABILITY
- PROVIDES RESISTANCE TO OUT-OF-PLANE DEFLECTION

SOLAR KINETICS INC.

HUB AND SPOKE BENEFITS

- EFFICIENTLY INCREASES NUMBER OF SUPPORTS

  RING DEFLECTION $\propto$ $\left[\text{SPAN}\right]^3$
  (ERROR)

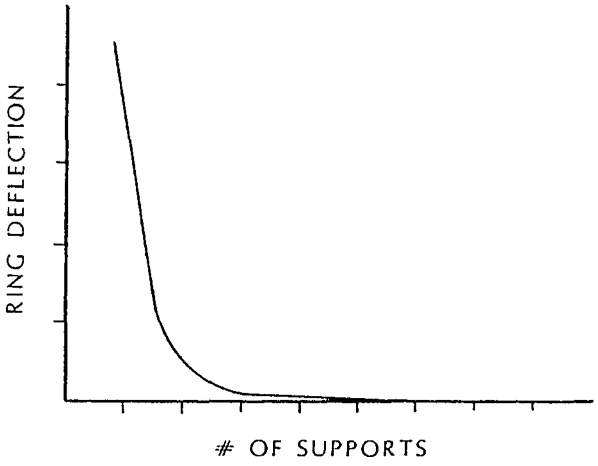

- EFFICIENTLY TRANSFERS LOADS

  MOST LOADS CARRIED AS PURE TENSION

  HUB CARRIES COMPRESSION WITH NO MOMENT LOADS
  —AN EFFECTIVE SLENDER COLUMN—

- LOAD PICK-OFF

  RING WITH CRADLE

  HUB WITH CONVENTIONAL PEDESTAL

SOLAR KINETICS INC.

CONCEPTUAL SUPPORT DESIGN
DRIVE GEOMETRY

STOW POSITION

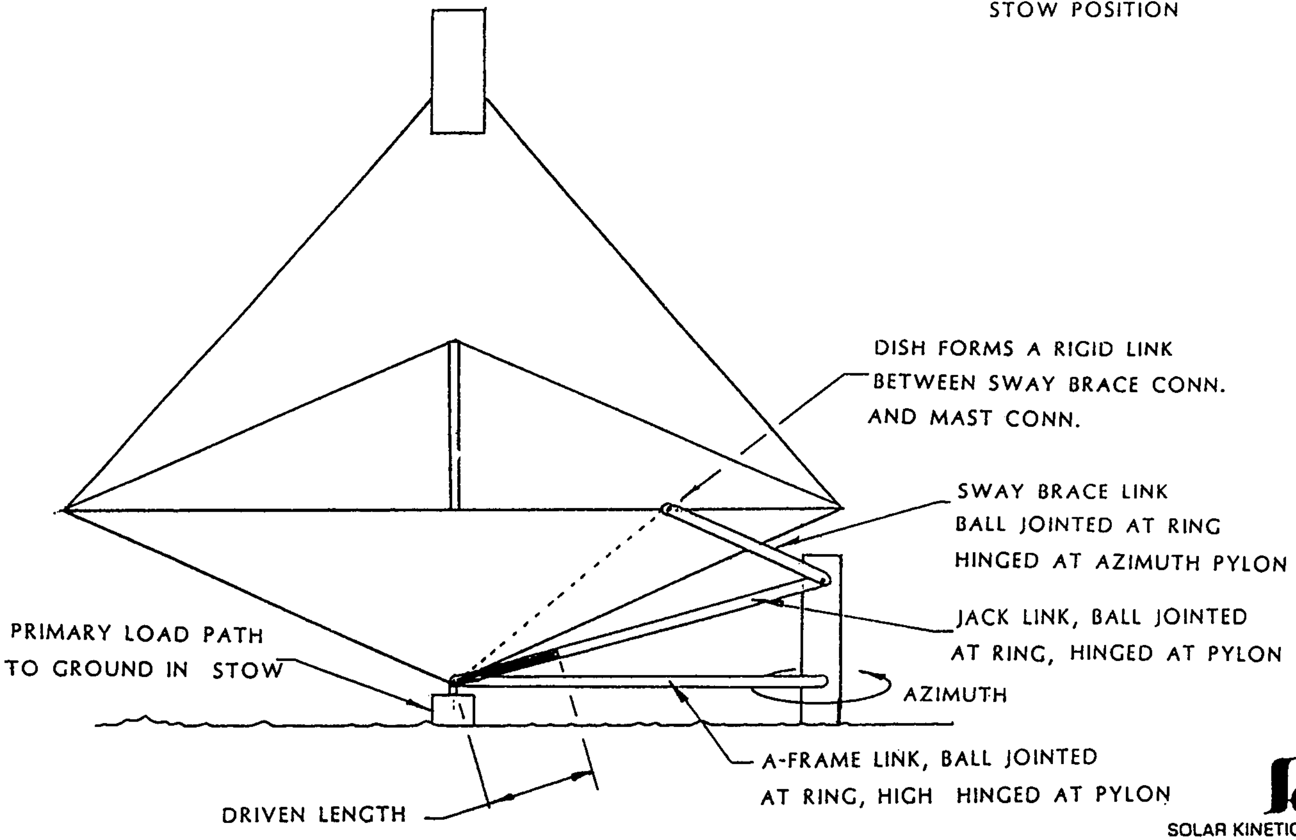

SOLAR KINETICS INC.

CONCEPTUAL SUPPORT DESIGN
DRIVE GEOMETRY

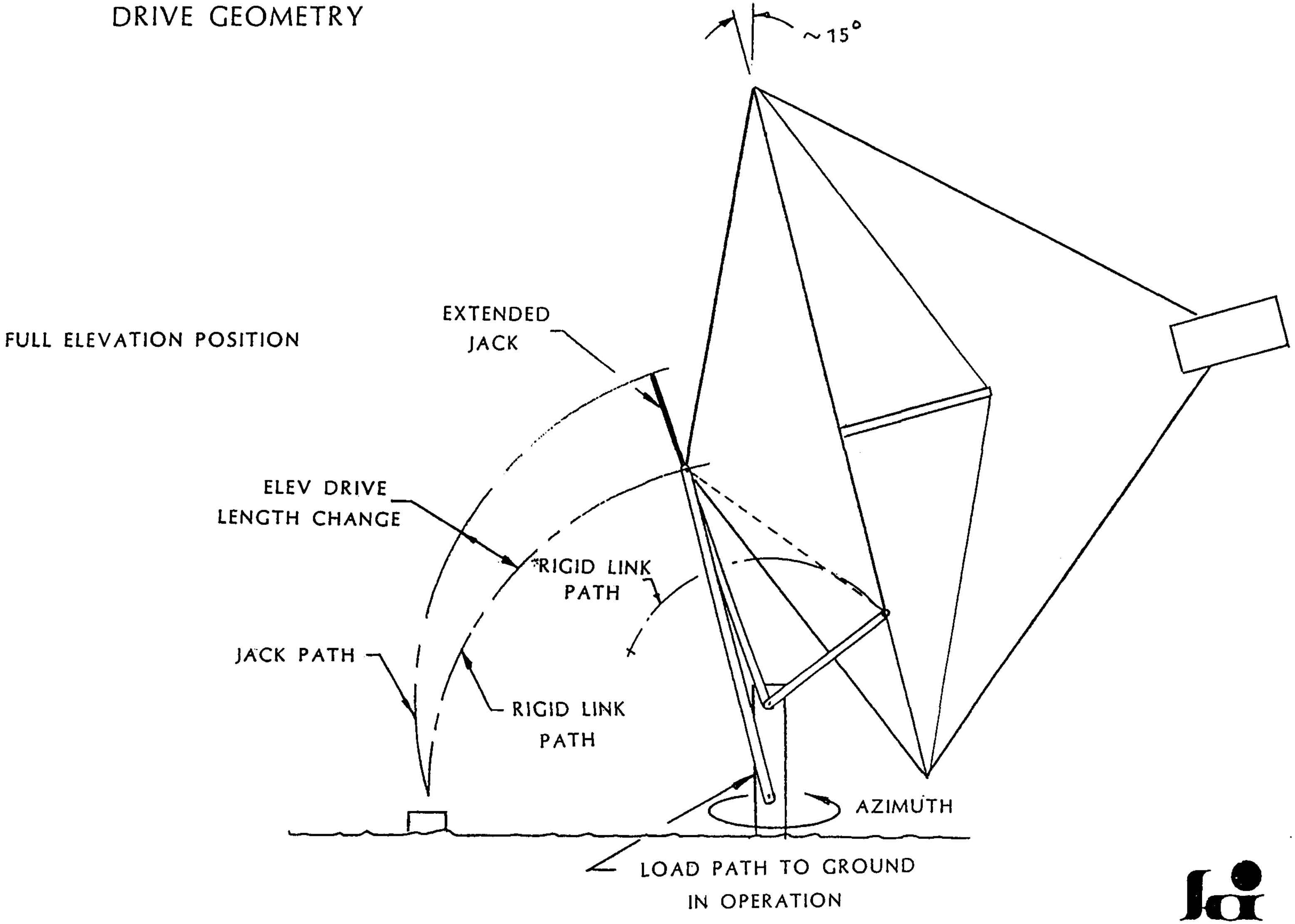

SOLAR KINETICS INC.

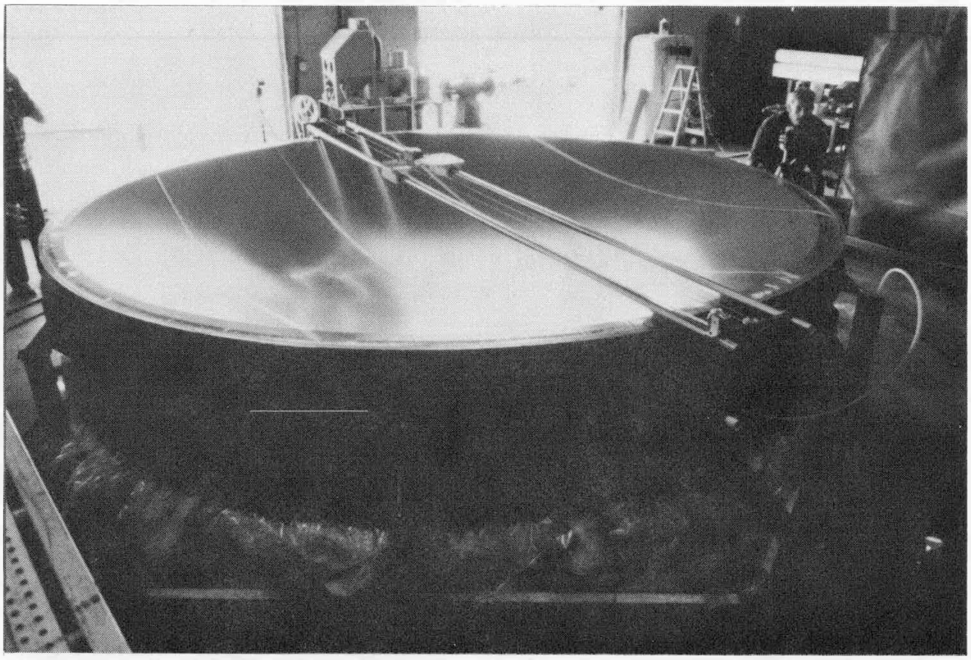

Test Scale Membrane Measurement Equiptment, A Formed Aluminum Membrane (without reflective film) is Shown in PLace.

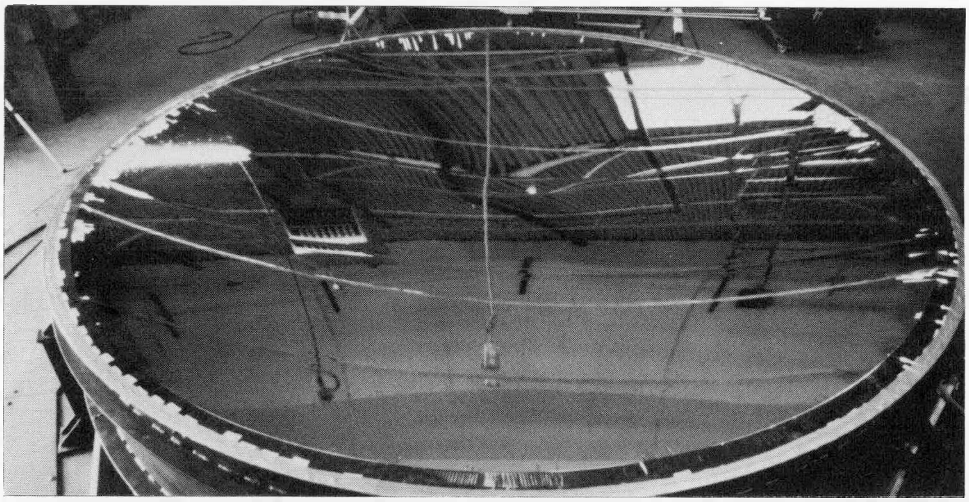

Formed Test Scale Membrane with a Separate Reflective Film Membrane Held in Place with Stabilization Pressure.

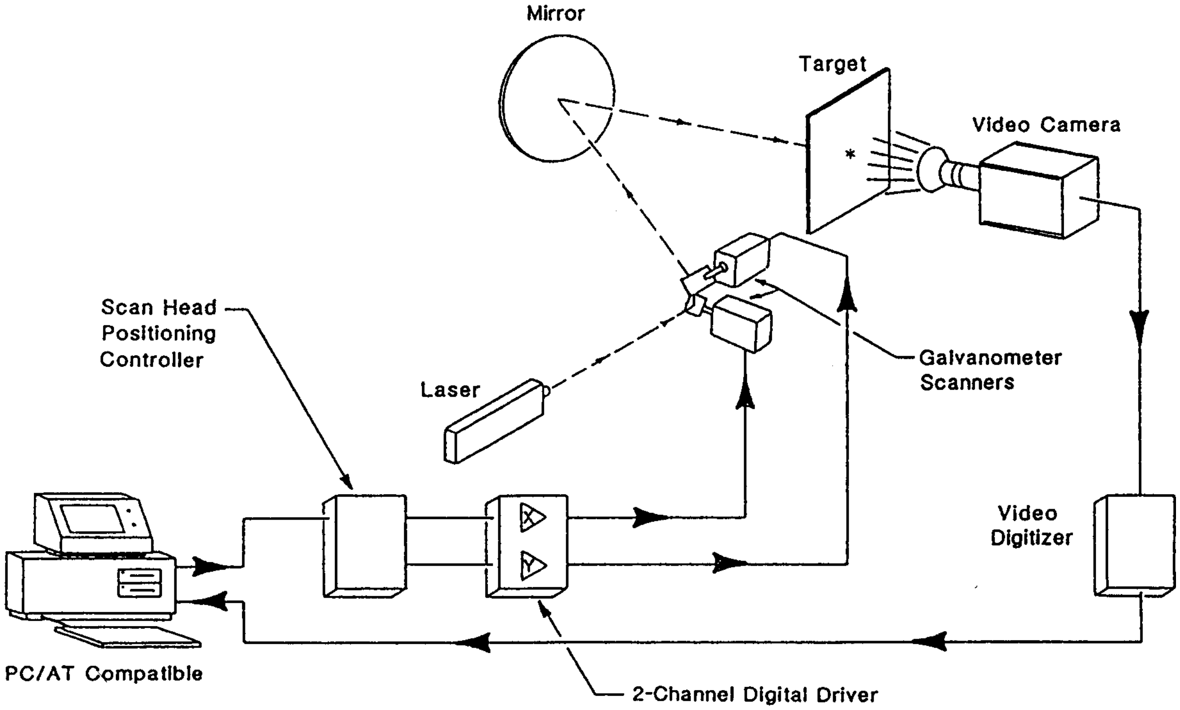

Hartmann Technique for Mirror Contour Measurements.

Figure 1

HARTMANN MEASURING SYSTEM

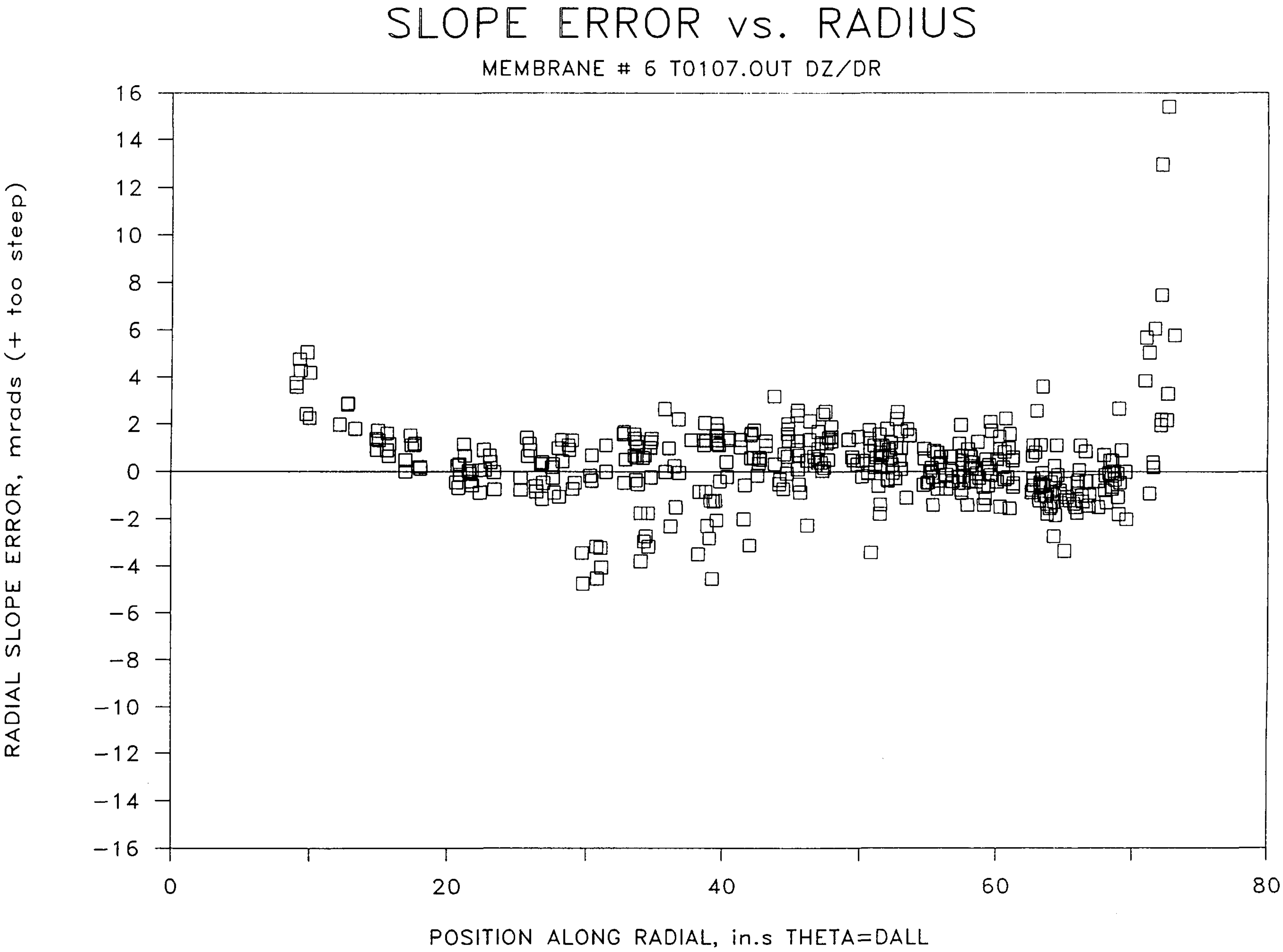
SLOPE ERROR vs. RADIUS
MEMBRANE # 6 T0107.OUT DZ/DR
RADIAL SLOPE ERROR, mrads (+ too steep)
16
14
12
10
8
6
4
2
0
−2
−4
−6
−8
−10
−12
−14
−16
0
20
40
60
80
POSITION ALONG RADIAL, in.s THETA=DALL

ABSTRACT

Structural and Optical Modeling of Non-Axisymmetrically Deformed Membrane Dish Concentrators

T. J. Wendelin, G. J. Jorgensen, and C. D. Balch*
Solar Energy Research Institute, Golden, CO

To study the response of dish concentrators to real-world effects (such as wind and gravity loads, sensitivity to manufacturing tolerances, etc.), non-axisymmetric structural models are required. Typically, finite element simulations are used. However, this approach tends to be expensive, time consuming, and requires special expertise on the part of the user. To avoid some of these problems, an analytical representation of paraboloidal dish membranes subjected to non-axisymmetric loads was developed.

The program (DISH) relies on analytical solutions in the form of asymptotic series expansions. DISH models membrane and bending behavior, and accounts for the geometric nonlinearity associated with the intial prestress due to pressure stabilization. Non-axisymmetric deformations are treated by a Fourier decomposition of displacements and forces in terms of circumferential harmonics. The response of the dish to general edge deformations can therefore be easily analyzed. The program is easy to use, and runs quickly on personal computers.

In order to alleviate the computational demands of an integrated finite element structural analysis of a membrane dish and its associated support structure, a hybrid analysis technique can be employed. In this approach, the response of the ring and support structure to a given external loading is determined by a finite element analysis. The resulting deformations of the membrane support ring are then used as boundary conditions in the DISH program in order to determine the membrane response. If desired, the membrane edge forces computed by the DISH program can be fed back to the finite element analysis to obtain a first order correction to the loads on the support structure, which yields an updated ring deformation. This defines an iterative procedure for obtaining the solution to the coupled membrane/support structural problem. Convergence is rapid; typically only 1-2 iterations are needed.

In order to quantify the impact of non-axisymmetric structural deformations, a non-axisymmetric optical model (which allows calculation of thermal efficiency as well) was also developed. The program (OPTDSH) uses a 3-dimensional ray-trace technique. Rays are generated at infinity either on a uniform (Cartesian) grid or in a random fashion. Each ray is traced to the dish surface, error terms are incorporated, the resulting direction upon reflecton is computed, and the ray is then traced to its intersection with the target plane. A variety of graphical

displays are available at both the dish and receiver surfaces. In particular, a zonal spot diagram of rays intersecting the target plane can be produced. A thermal efficiency analysis (as a function of receiver aperture) can be performed to model the absorption and loss of energy at the collector.

Structural results can be input to OPTDSH in several ways. Measured data is accepted in the form of slope and/or position (height). Finite element data of the same type can also be used. Of particular interest is the interface with the DISH structural code. This interface is completely analytical in the sense that the position and slopes of the dish surface at each ray intersection point is computed exactly; no interpolation is required.

[*] Work performed under SERI subcontract; Present address is Rasna Corporation, Santa Clara, CA

Capabilities of Membrane Dish Structural Code DISH

- Based on asymptotic analytical solutions from shell theory
- Elastic behaviour, small strains
- High prestress due to pressure loading
- Non-axisymmetric loads and edge effects
- Fast; runs on a PC
- Interfaces directly with optical analysis code - OPTDSH
- Analytical procedure for coupled ring/membrane interaction

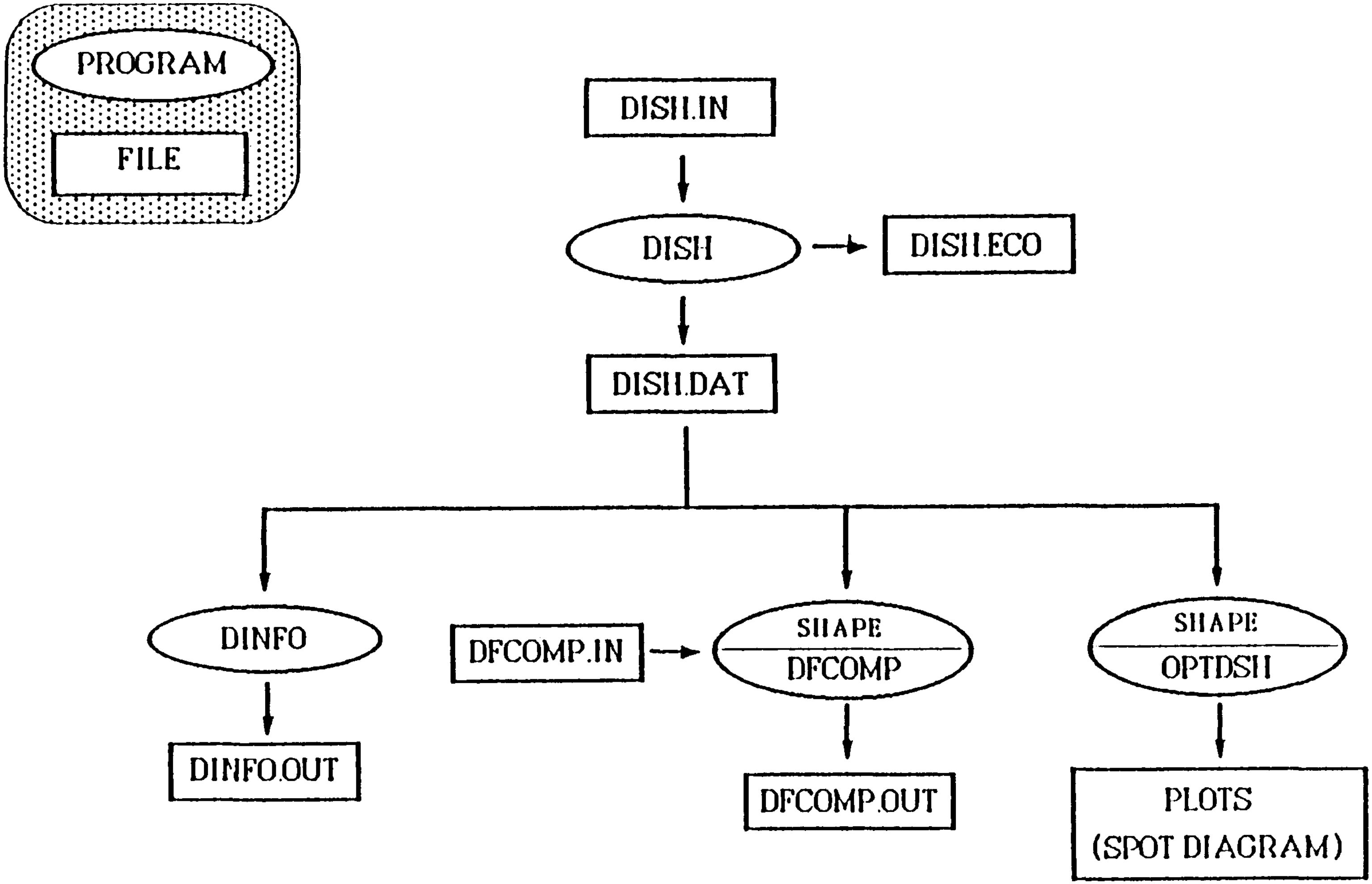

Flowchart of data paths for structural and structural/optical analyses.

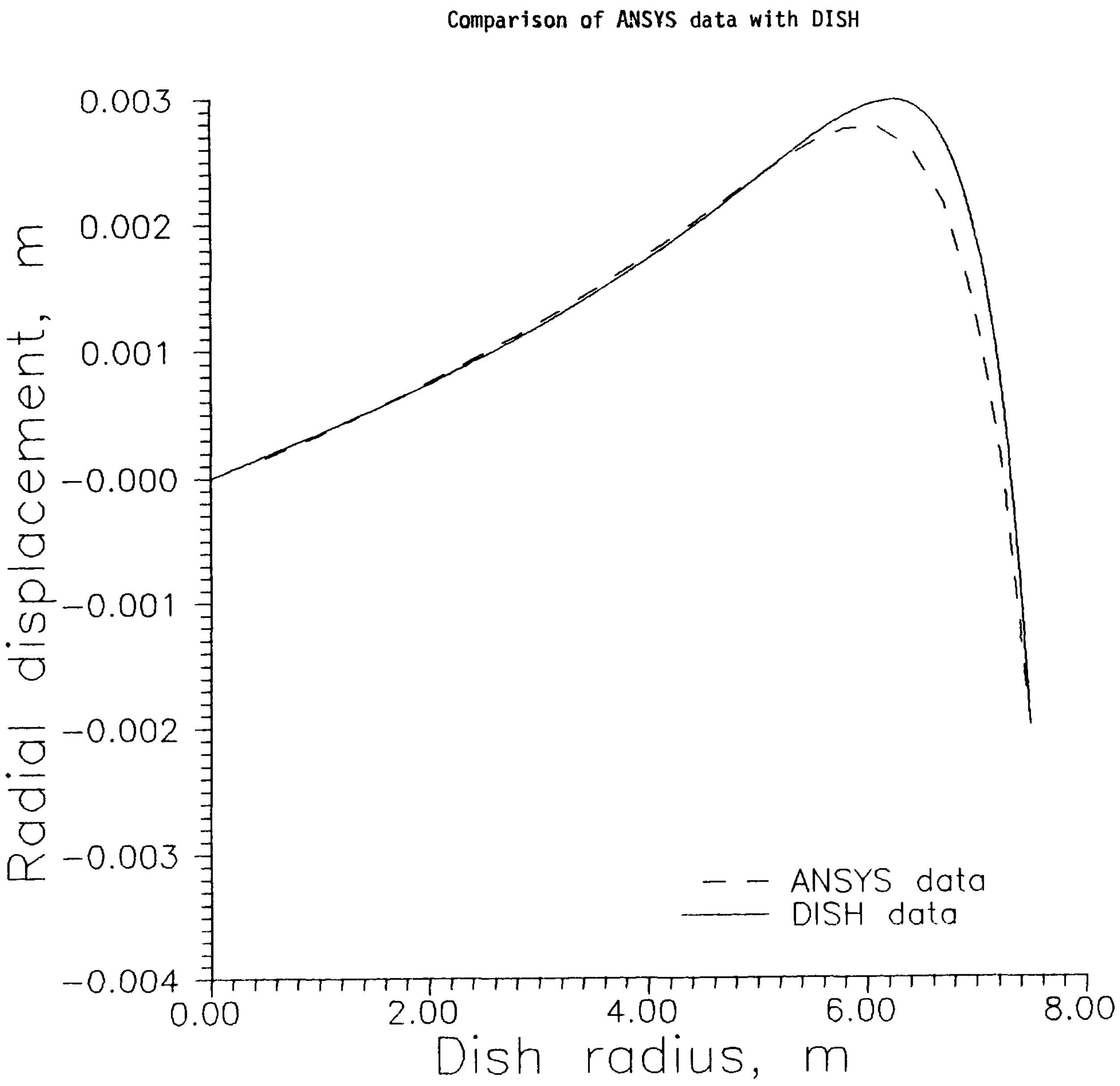
Comparison of ANSYS data with DISH
Radial displacement, m
0.003
0.002
0.001
−0.000
−0.001
−0.002
−0.003
−0.004
Dish radius, m
0.00
2.00
4.00
6.00
8.00
ANSYS data
DISH data

MODELING OF NON-AXISYMMETRIC COUPLED RING/MEMBRANE STRUCTURE

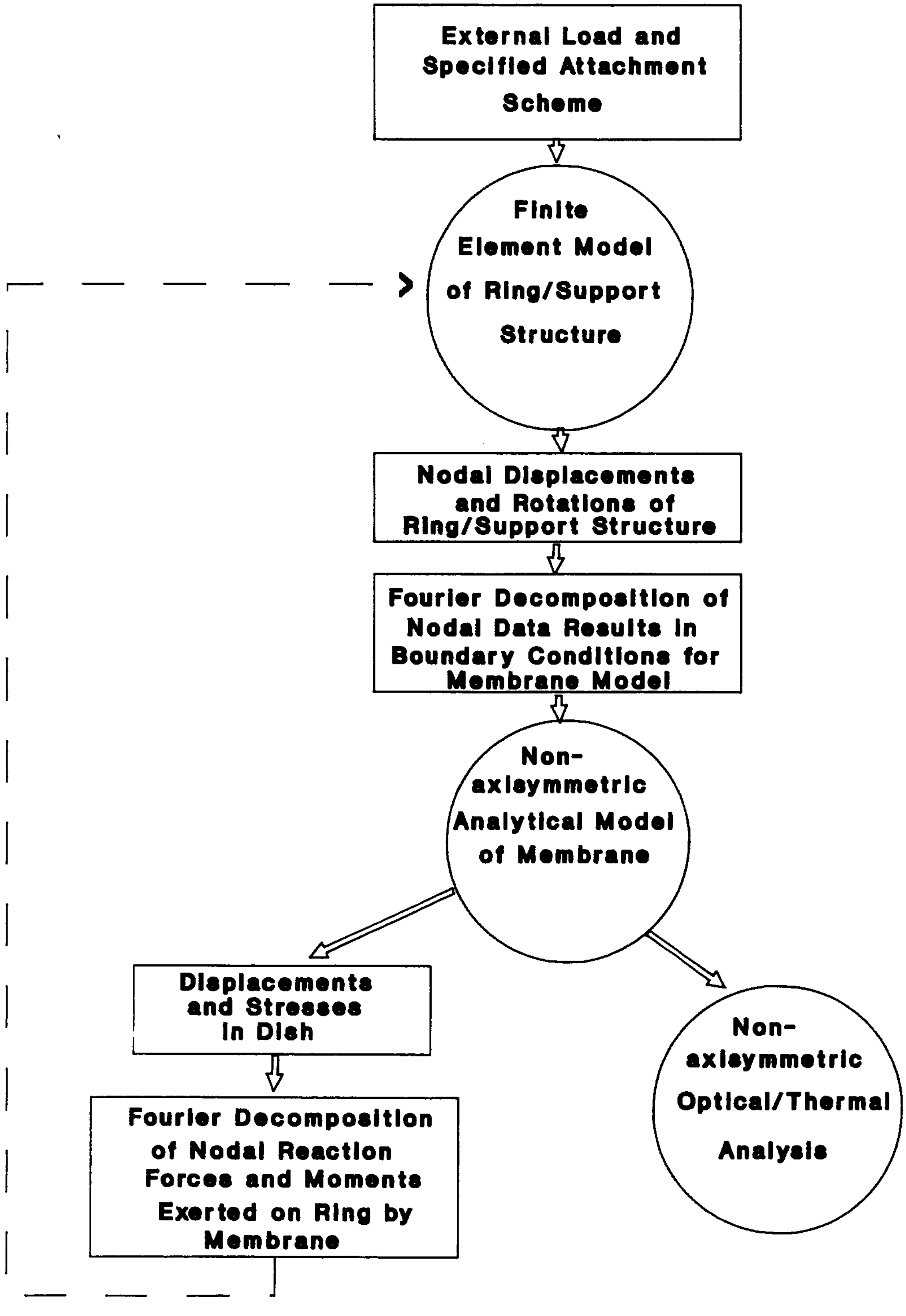

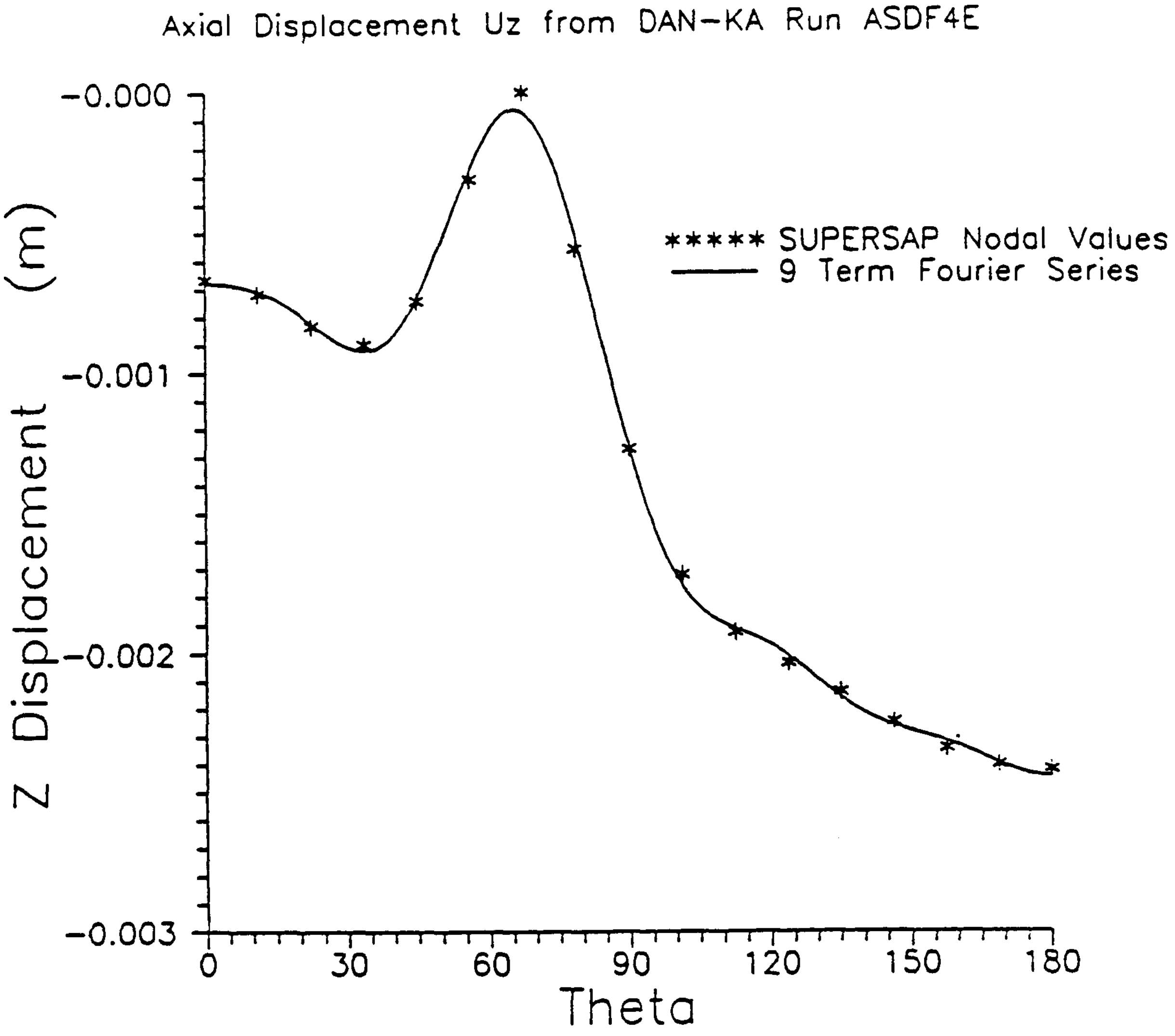

Comparison of SUPERSAP nodal displacements Uz with the nine term Fourier series representation.

Capabilities of Optical Analysis Code
OPTDSH

- Non-axisymmetric optical modeling based on ray-tracing
- Variety of input data types
    - DISH analytical output
    - finite element data
    - measured data
    - other analytical representations
- User selectable optical error terms and thermal parameters
- Graphical representation of spot diagram at target plane and dish surface
- Thermal analysis capability with graphical output

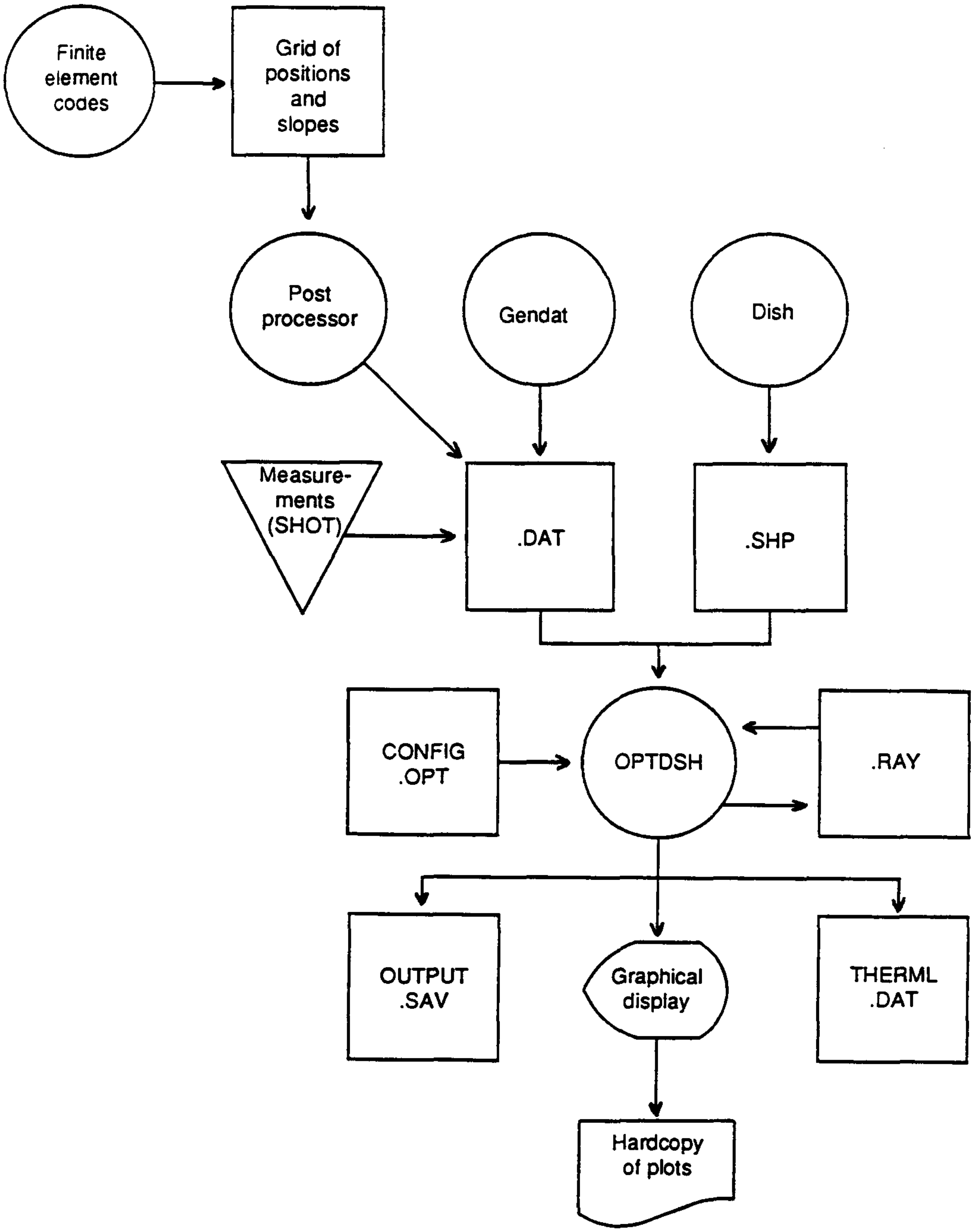

Logic flow and interfaces of OPTDSH

Perfect (analytical) parabolic dish; f/D=0.6; Errors Included
Frequency Histogram for 2000 Rays

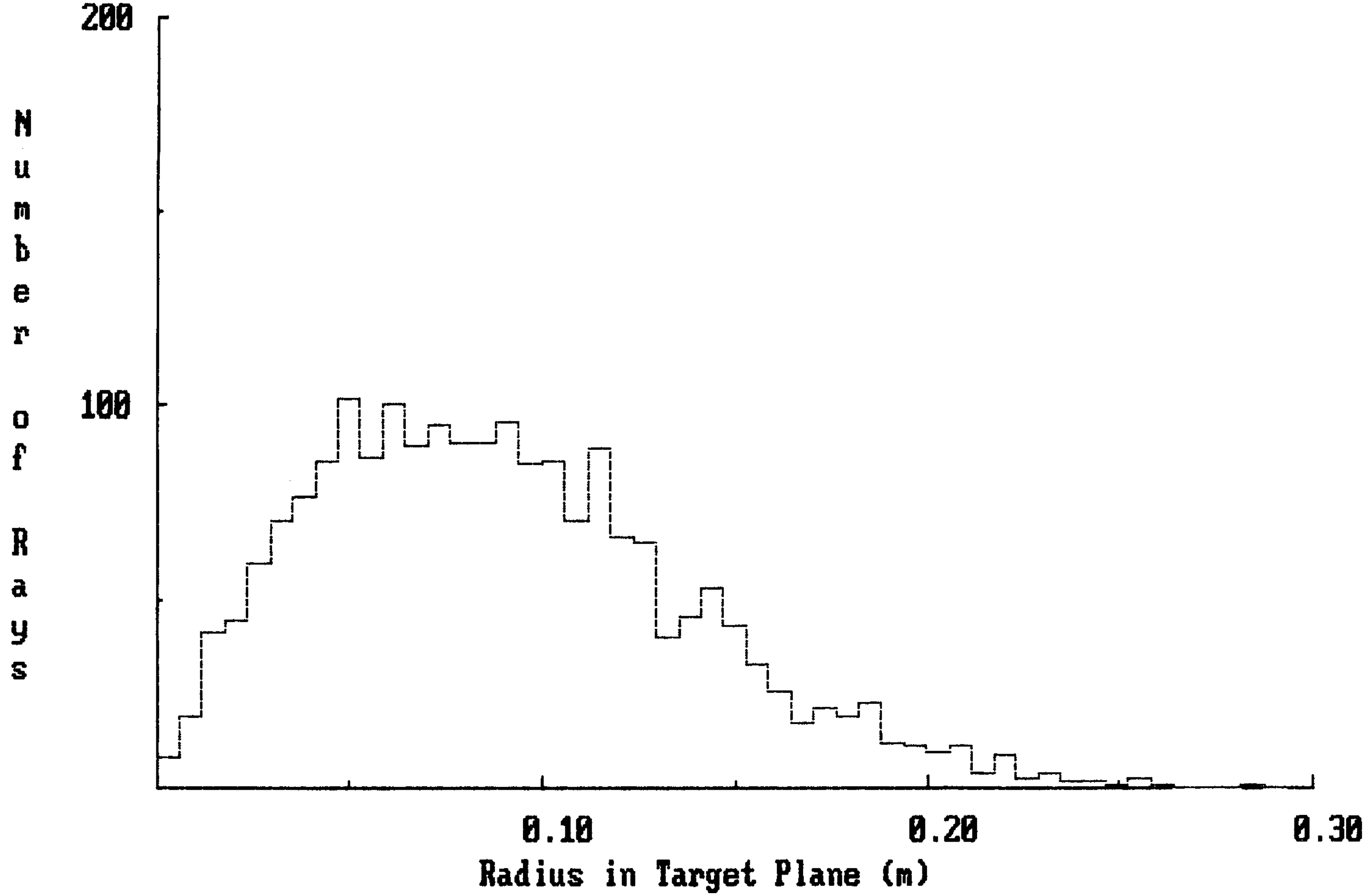

Perfect (analytical) parabolic dish; f/D=0.6; Errors Included
Dish Radius= 7.50; Focal Length= 9.00; Target Distance= 9.00

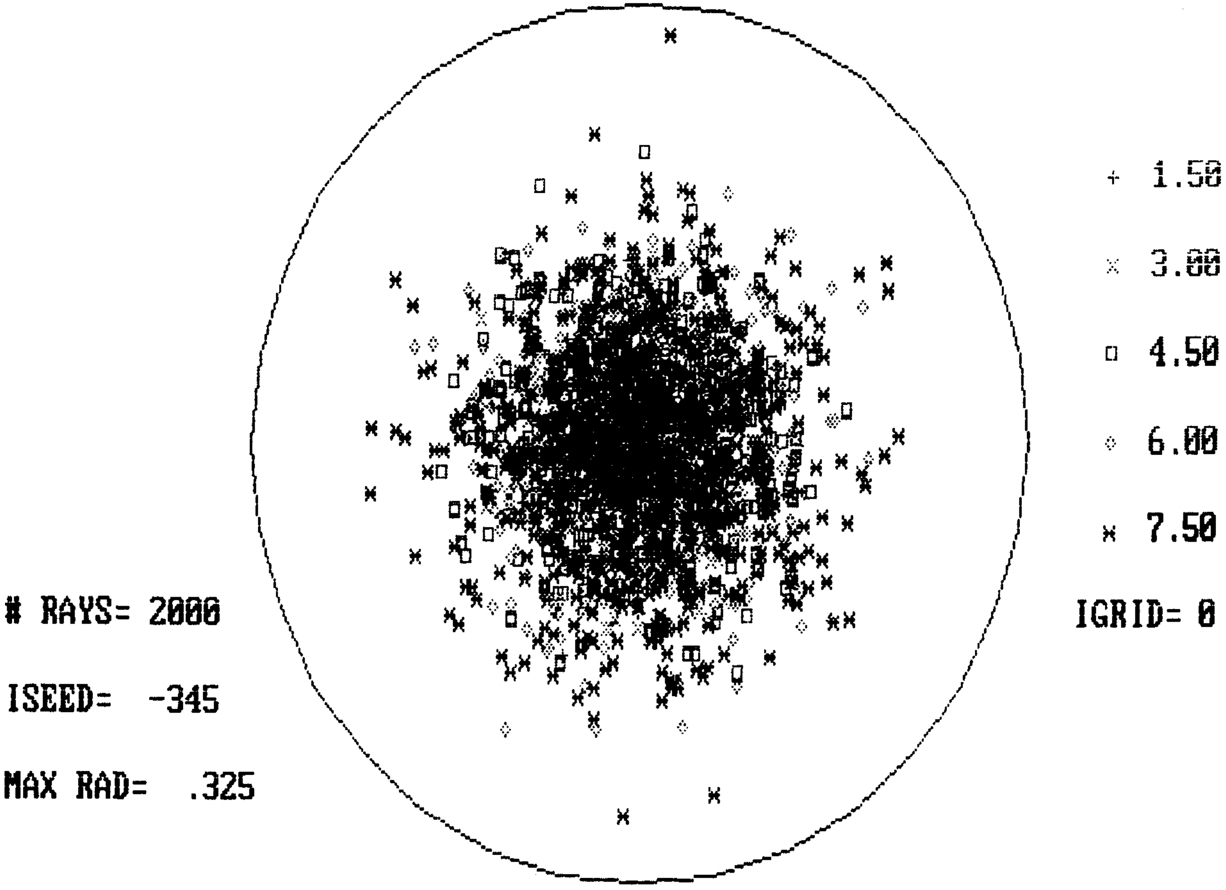

RAD= .350; RMS RAD= .103; RMS DEV= .049

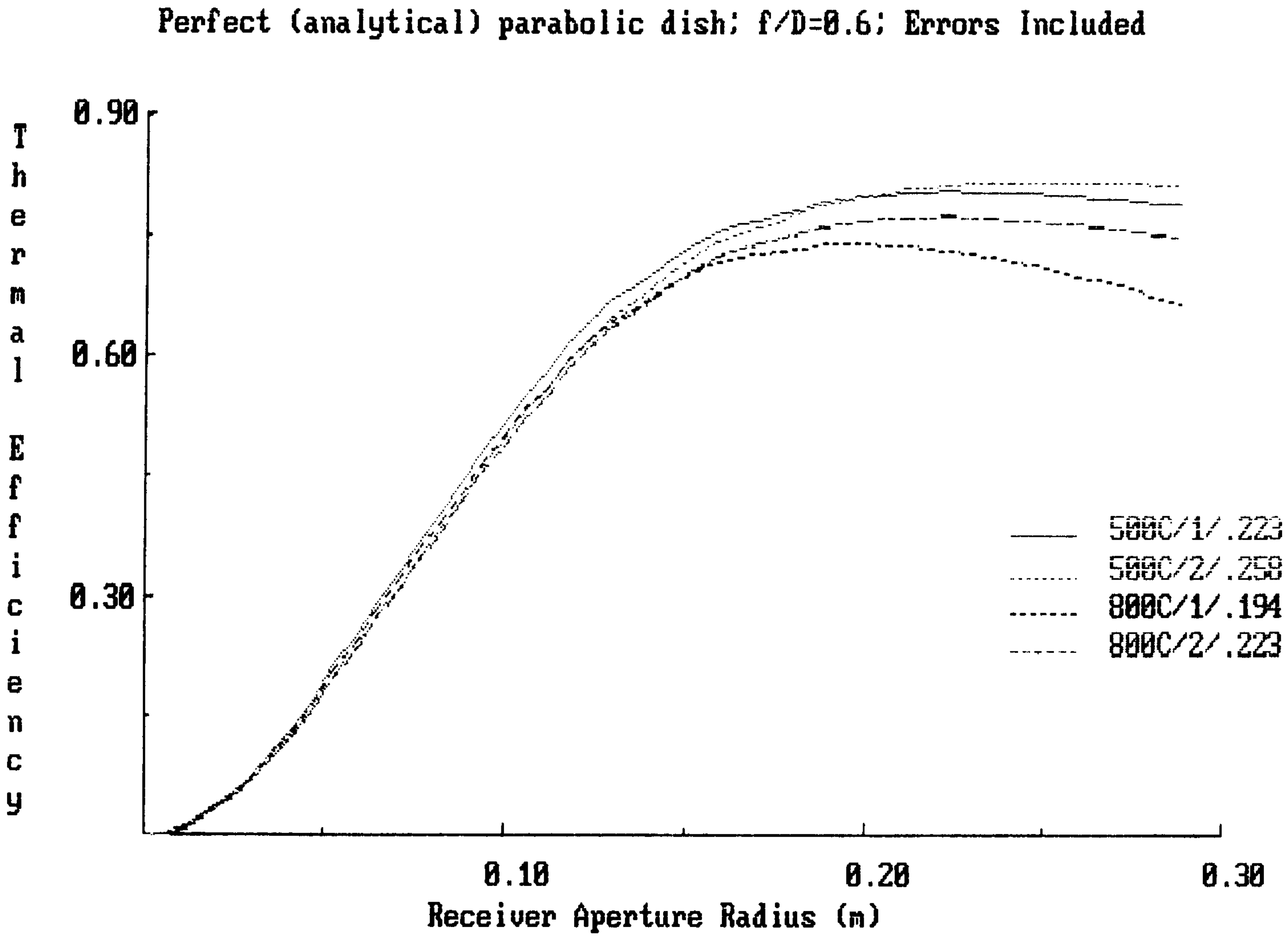
Perfect (analytical) parabolic dish; f/D=0.6; Errors Included

PEERLESS-WINSMITH, INC.
Werner H. Heller

ABSTRACT

DEVELOPMENT OF A LOW COST HELIOSTAT DRIVE

In May, 1986, Peerless-Winsmith received a contract to develop a heliostat drive with a cost goal of 11 dollars per meter^2 of reflector area based on an area of 150 meter^2 and a yearly production rate of 50,000 units for a 10 year period of time.

Design requirements were high pointing accuracy, ability to support wind induced loads of 90 mph, low maintenance requirements over a 30 year life, and ability to survive continuous operation in a desert environment without detrimental degradation of performance during the design life span.

It is believed that this design can meet all design requirements and it can approach the cost goal very closely. This would represent a significant reduction of drive system cost compared to existing designs.

To derive at this design, a number of alternative configurations were examined with the intent of selecting the most cost effective drive system capable to meet load, performance, and environmental conditions with small or no safety factors. Although all components of the drive are conventional, overall performance was proven through a prototype construction and testing program.

Initial testing showed several areas that require improvements which can be implemented with very little effect on unit cost. Since testing is incomplete at this time, it can be expected that additional problem areas be discovered. However, it is expected that this design can be developed to possess uniform strength, adequate durability, and environmental resistance with no costly excessive safety margin.

The complete azimuth-elevation drive assembly consists of an azimuth drive composed of a planetary first stage of 460:1 gear ratio and a final drive of 72:1 gear ratio. The final drive consists of an outer ring gear supported by the integral azimuth bearing and a single planet gear which is supported by two drive eccentrics.

The elevation drive consists of a ball screw of 56.6" stroke driven by a ball nut that is part of a worm gear drive of 70:1 gear ratio for an overall reduction ratio of 31,640:1.

A main support structure of welded steel bolted to the azimuth output ring gear provides mounting points for the mirror support structure and the elevation drive housing.

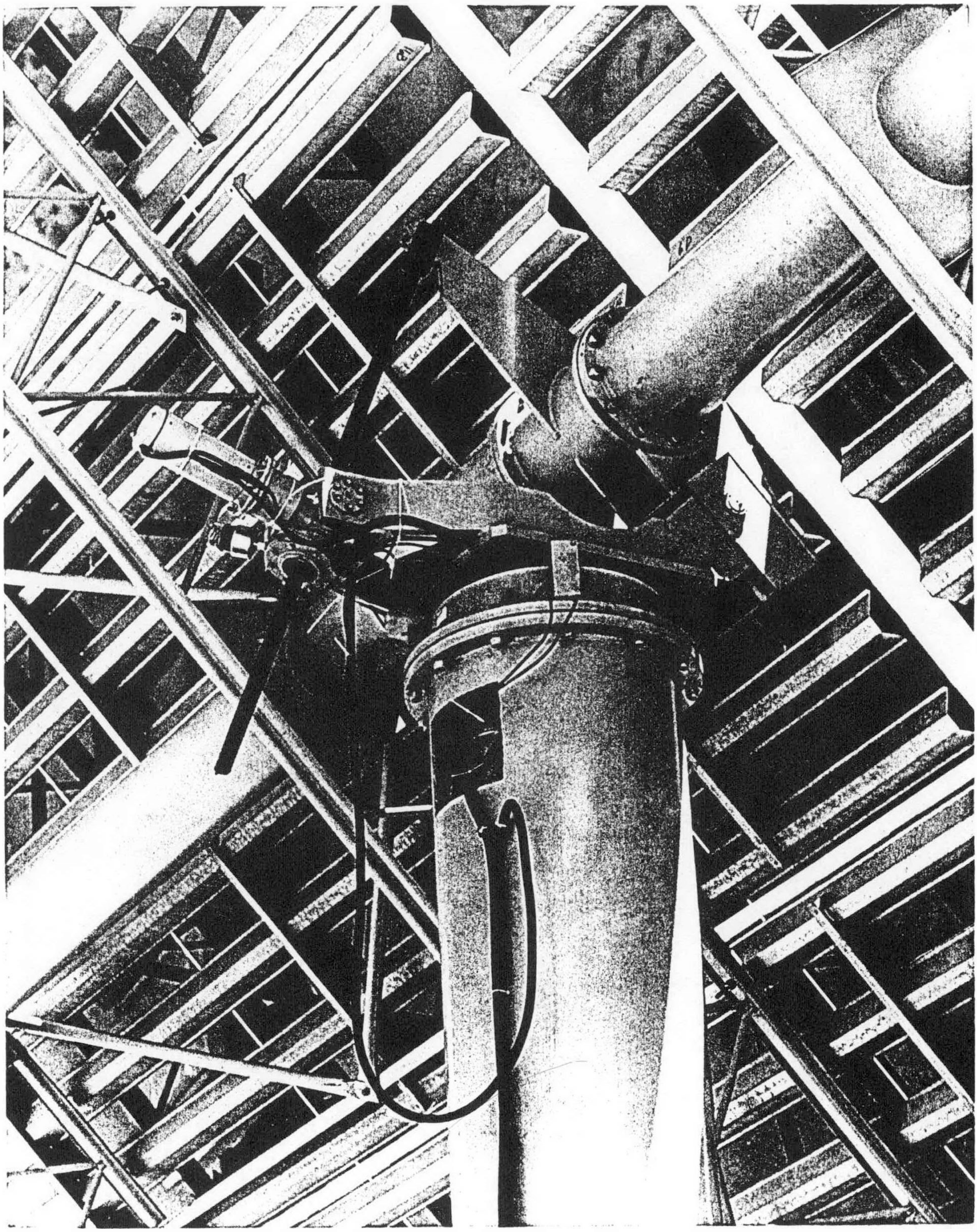

AZIMUTH DRIVE

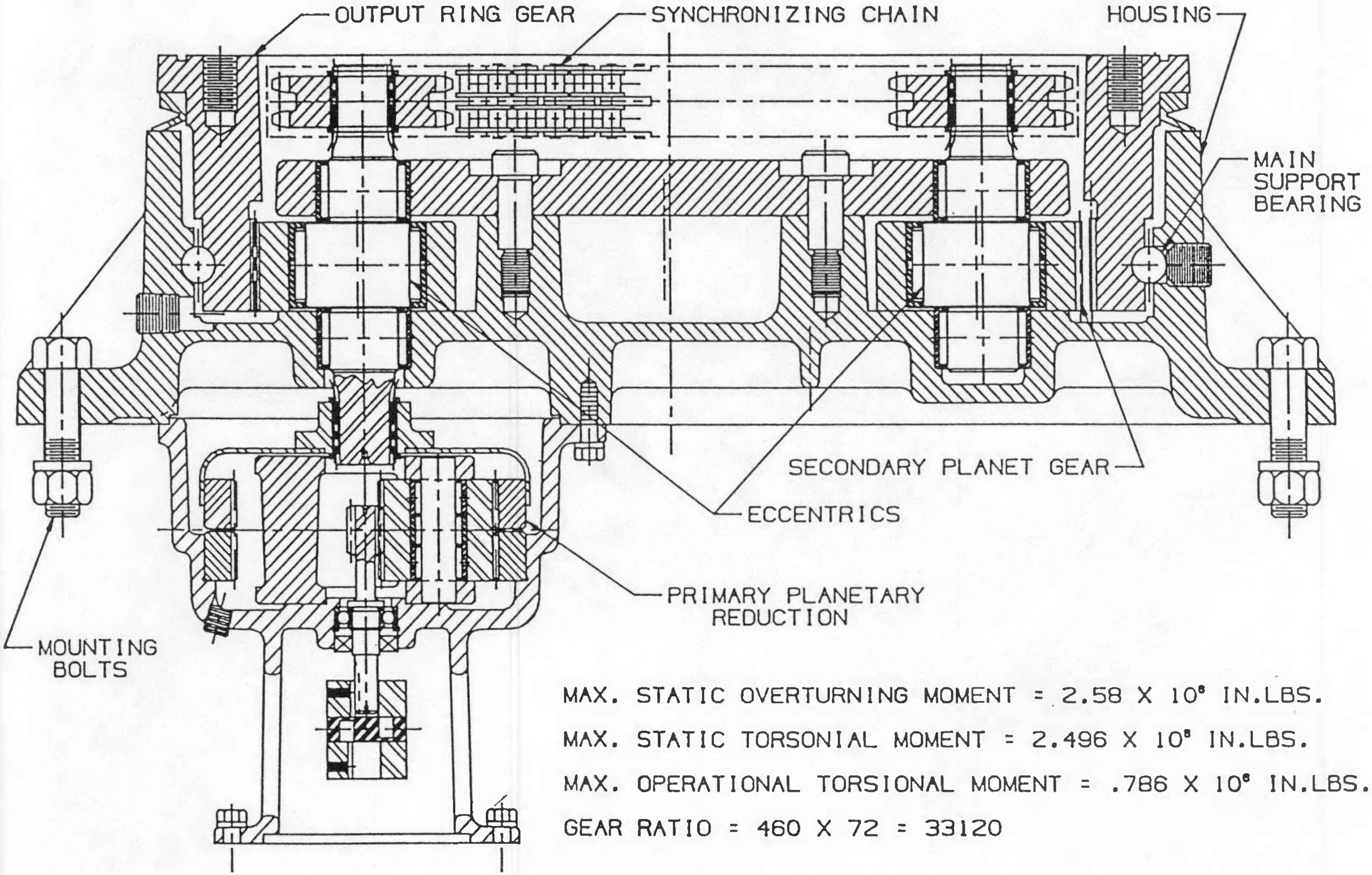

MAX. STATIC OVERTURNING MOMENT = 2.58×10^{8} IN.LBS.

MAX. STATIC TORSONIAL MOMENT = 2.496×10^{8} IN.LBS.

MAX. OPERATIONAL TORSIONAL MOMENT = $.786 \times 10^{6}$ IN.LBS.

GEAR RATIO = 460 X 72 = 33120

ELEVATION DRIVE

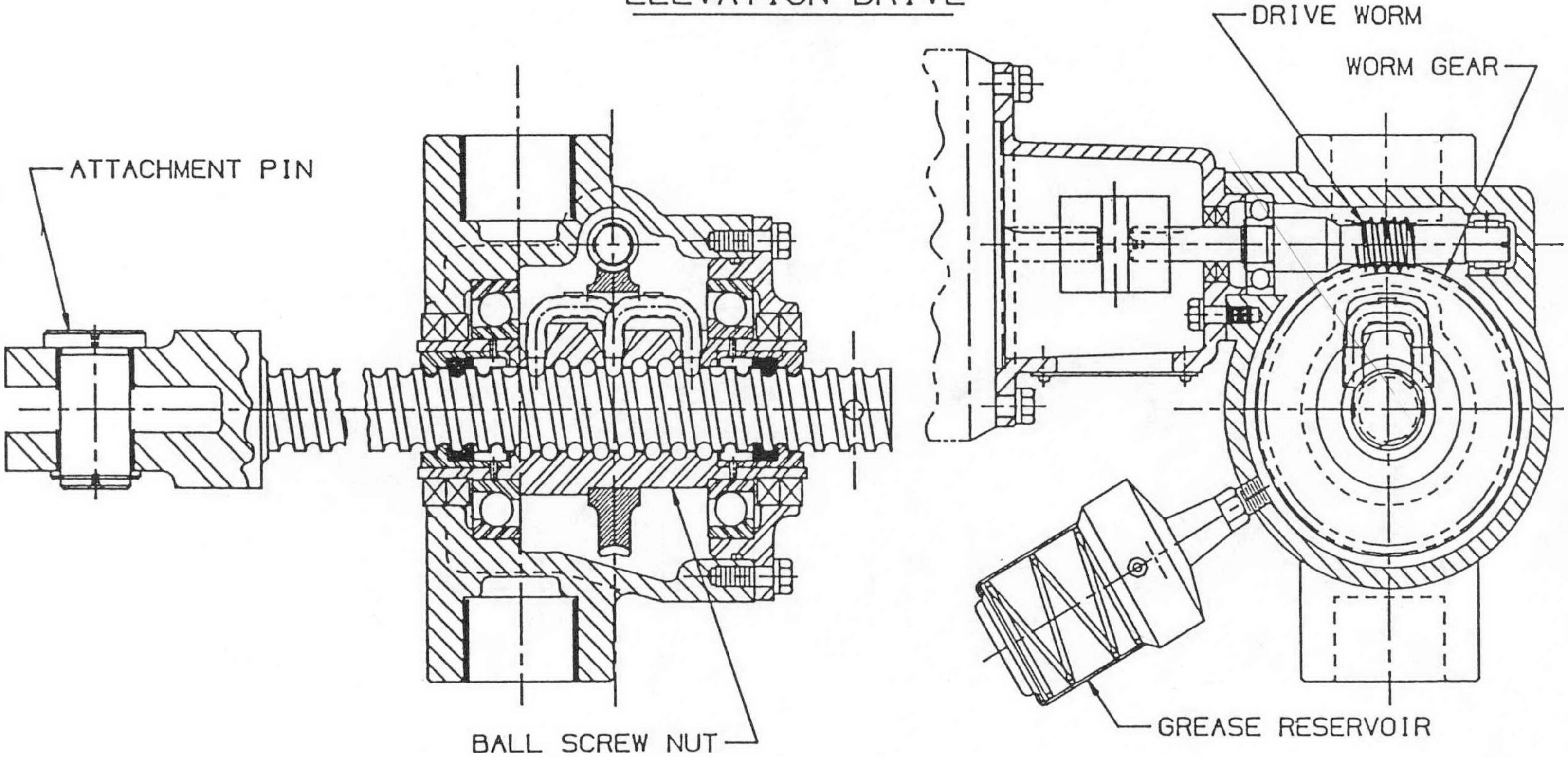

MAX. STATIC MOMENT = 2.64 X 10^6 IN.LBS.

MAX. OPERATIONAL MOMENT = .787 X 10^6 IN.LBS.

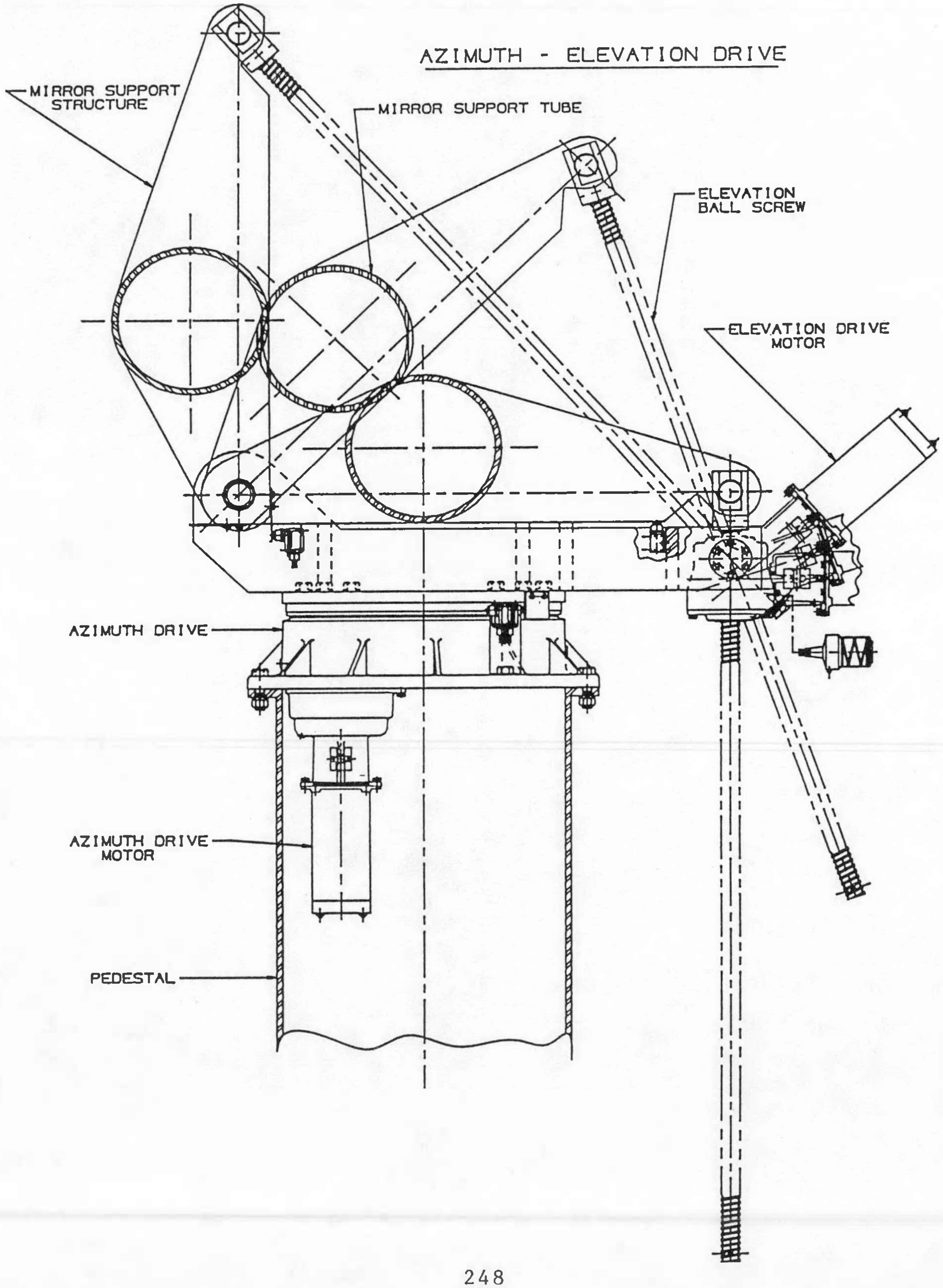

AZIMUTH - ELEVATION DRIVE

Optical Performance and Durability of Silvered Polymer Mirrors

Paul Schissel, Gary Jorgensen and Roland Pitts

Solar Energy Research Institute
1617 Cole Boulevard, Golden, Colorado

ABSTRACT

Use of solar energy to generate electric power and process heat frequently requires large mirrors to provide high levels of concentrated sunlight. The weight and fragility of glass-metal mirrors impose considerable structural support constraints that, coupled with the material costs, are economically infeasible. Metallized polymeric reflector materials offer significant system weight reduction while affording greater flexibility in terms of system design. Such materials must maintain high optical performance over extended service lifetimes.

On the basis of optical performance, silver is the reflector material of choice. The hemispherical reflectance of a freshly deposited silver film weighted over the solar spectrum (0.3-3.0 micrometers) is greater than 97%. A transparent front surface protective layer is required to shield the silver from abrasion, soiling, and corrosion. Typically, an acrylic polymer with UV absorbers (to inhibit ultraviolet-photon-activated degradation) is used. The solar-weighted hemispherical reflectance of such an unweathered silvered acrylic material exceeds 92%.

To attain high system energy conversion efficiencies, concentrated sunlight must be used. This means that hemispherical reflectance is not an adequate measure of optical performance; candidate mirror materials must exhibit very good specular reflectance as well. Depending upon the solar technology application, the system requirement is 90% reflectance into a full cone angle of 4-8 mrad. Such performance has been demonstrated for unweathered materials; the present thrust is to maintain this level over a minimum 5-year lifetime.

The durability of candidate metallized polymer reflector materials is a critical issue. Resistance to optical degradation caused by ultraviolet radiation, atmospheric pollutants, abrasion, and soil retention must be demonstrated. Adhesion at the silver/polymer interface is another potential problem exacerbated by moisture absorption. Several approaches were undertaken to mitigate these effects. Hard coats were synthesized and shown to impede abrasion. Such hard coats could possibly serve as barriers to water vapor and external pollutants as well. Typically, hard coats are thermally cured. Substantial savings in manufacturing costs can potentially be realized by a UV curing process, but the weatherability of UV-cured hard coats may be a problem.

Another approach to preventing degradation is to deposit a passivation layer at the silver-polymer interface. Such a layer may take the form of a very thin metallic coating or an organic coating. By creating a barrier at the interface, protection against both external and internally generated (i.e., within the polymer film) reactants can be provided. At the same time, such a coating could also promote adhesion.

Durability studies of candidate silver polymer mirrors were carried out as a function of real-time outdoor weathering and accelerated exposure. Major progress was made toward achieving a long-term goal of demonstrating a specular reflectance of 90% that is maintained for at least 5 years.

SILVERED POLYMER MIRRORS

Paul Schissel
Gary Jorgensen
Roland Pitts

Metallized Polymer Reflector Construction

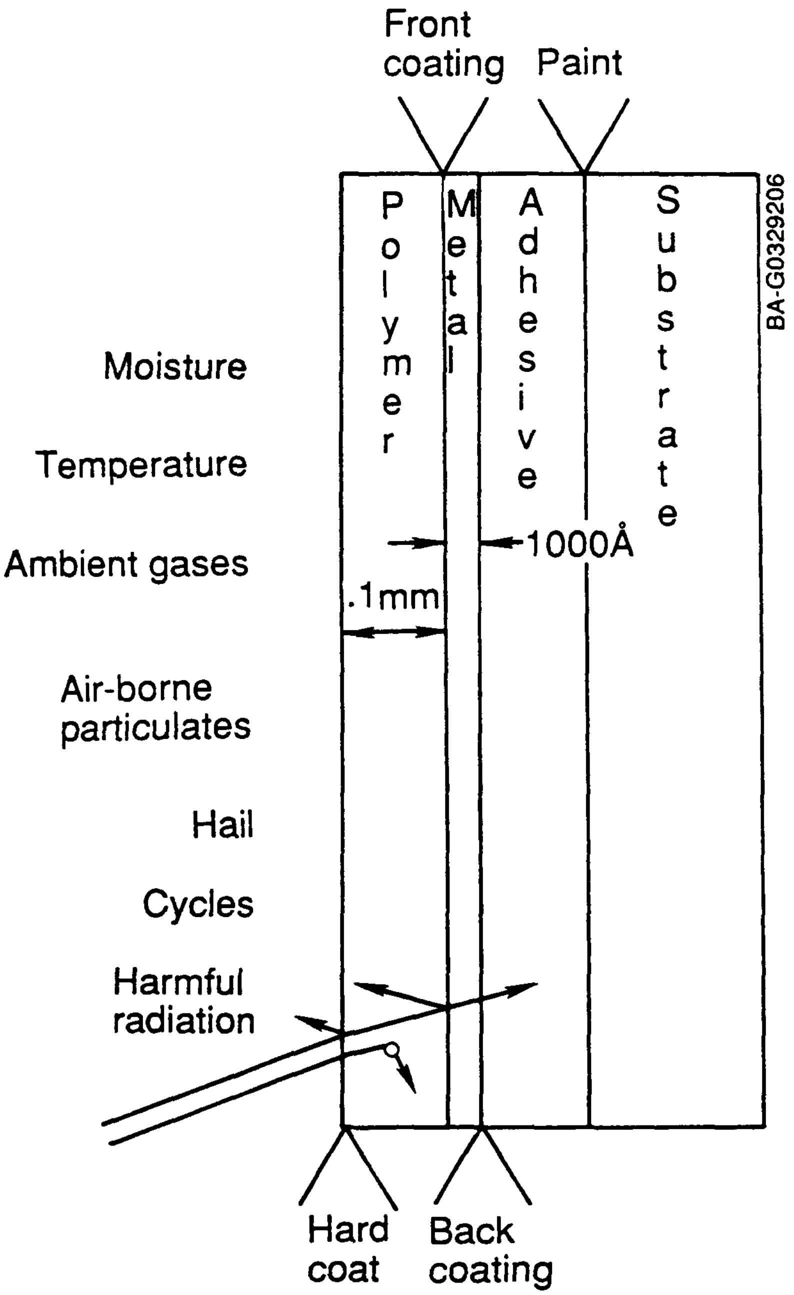

Figure 1.

GOAL: MAINTAIN SPECULAR REFLECTANCE
(4 mrad FULL CONE ANGLE)
ABOVE 90% FOR 5 YEARS

PROBLEMS IDENTIFIED:

SILVER CORROSION
(SILVER/POLYMER DELAMINATION)
SOILING / CLEANING
(REPLACEMENT)

SILVER CORROSION MECHANISM STUDIES

- NEAR UV LIGHT, ORGANIC ABSORBERS
- PAINTED SUBSTRATE BETTER THAN ALUMINUM OR STAINLESS STEEL
- PMMA PURITY
- UV, TEMPRATURE, SUBSTRATE, ATMOSPHERE, SYNERGISM

Outdoor Test Data

Silver Corrosion

- GOLDEN/DENVER (CONTINUING)
  Hs ›90% 4+ YEARS
  SPECULAR › 90% 2+ YEARS
  ECP 300 ‹ ECP 300A, 3M Co.
  5 YEARS EXPECTED
- MIAMI 1-1/2 YEARS.....?
- PHOENIX ‹ 90% ~1-1/2 YEARS

Need to slow corrosion X 4.

Solar Weighted Hemispherical Reflectance vs. Accelerated Weathering

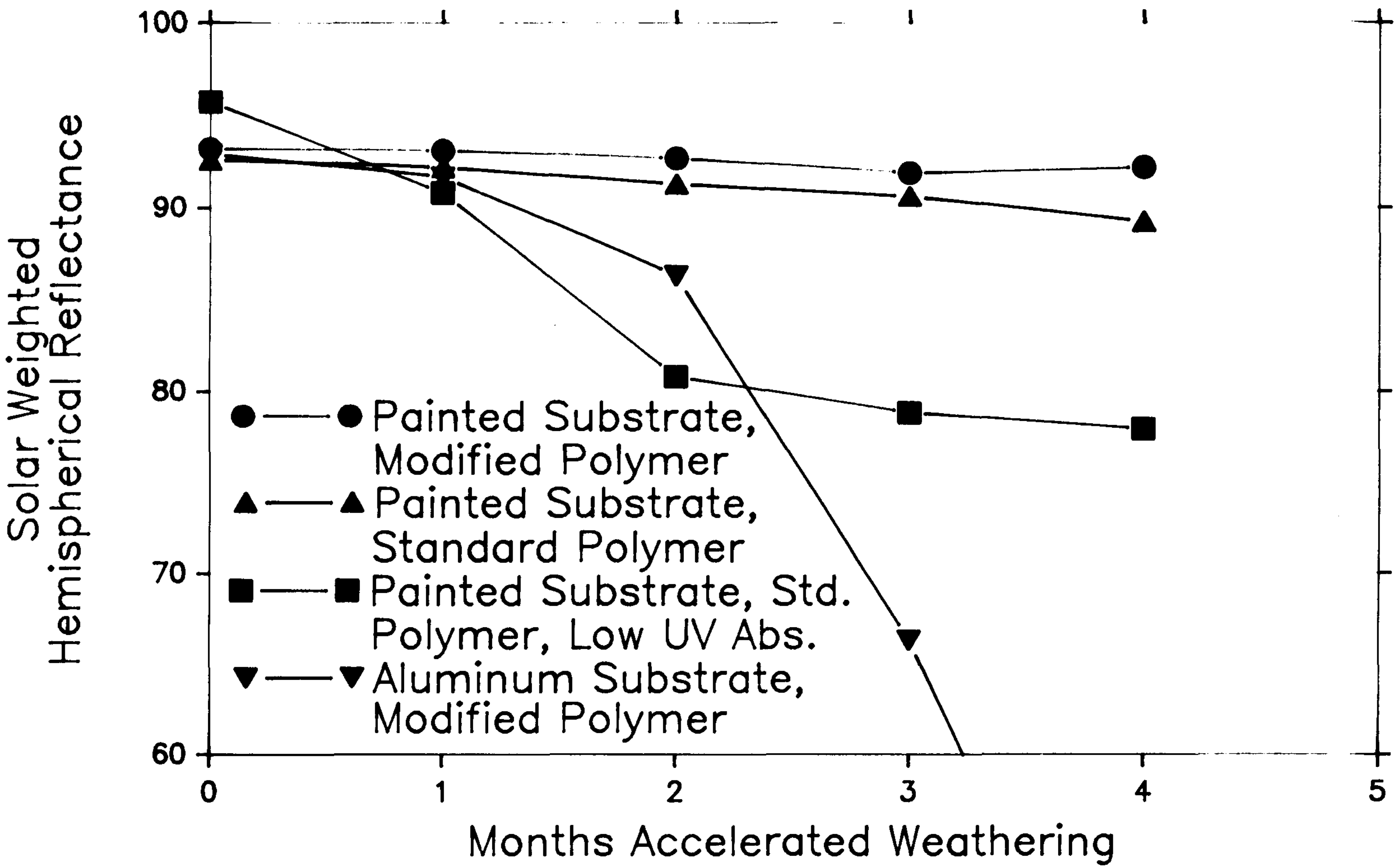

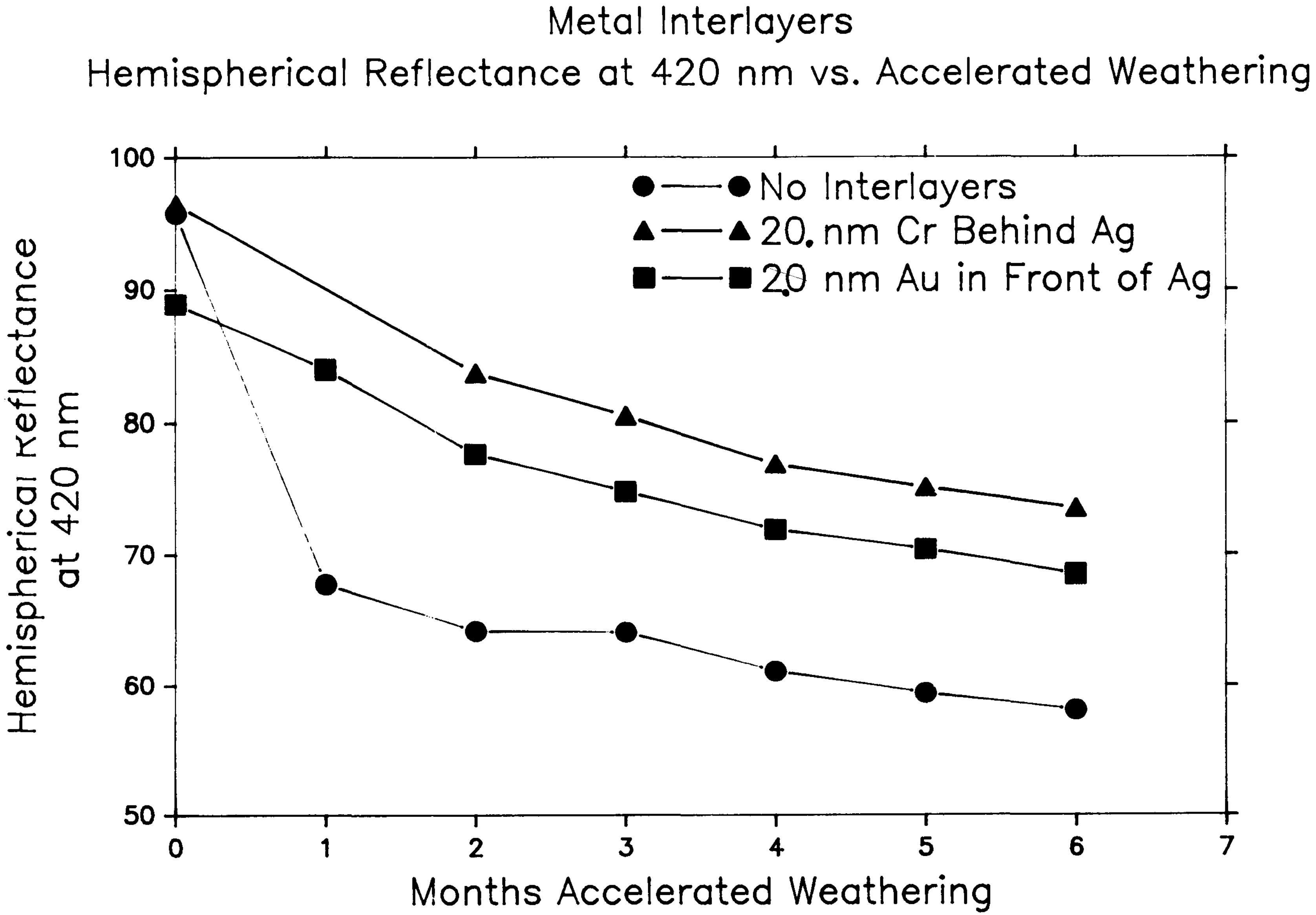
Metal Interlayers
Hemispherical Reflectance at 420 nm vs. Accelerated Weathering
● No Interlayers
▲ 20 nm Cr Behind Ag
■ 20 nm Au in Front of Ag
Hemispherical Reflectance at 420 nm
100
90
80
70
60
50
0
1
2
3
4
5
6
7
Months Accelerated Weathering

Solar Simulator Exposure of ECP-300A Lot 10 on Coil Coated Aluminum
Hemispherical Reflectance at 400 nm

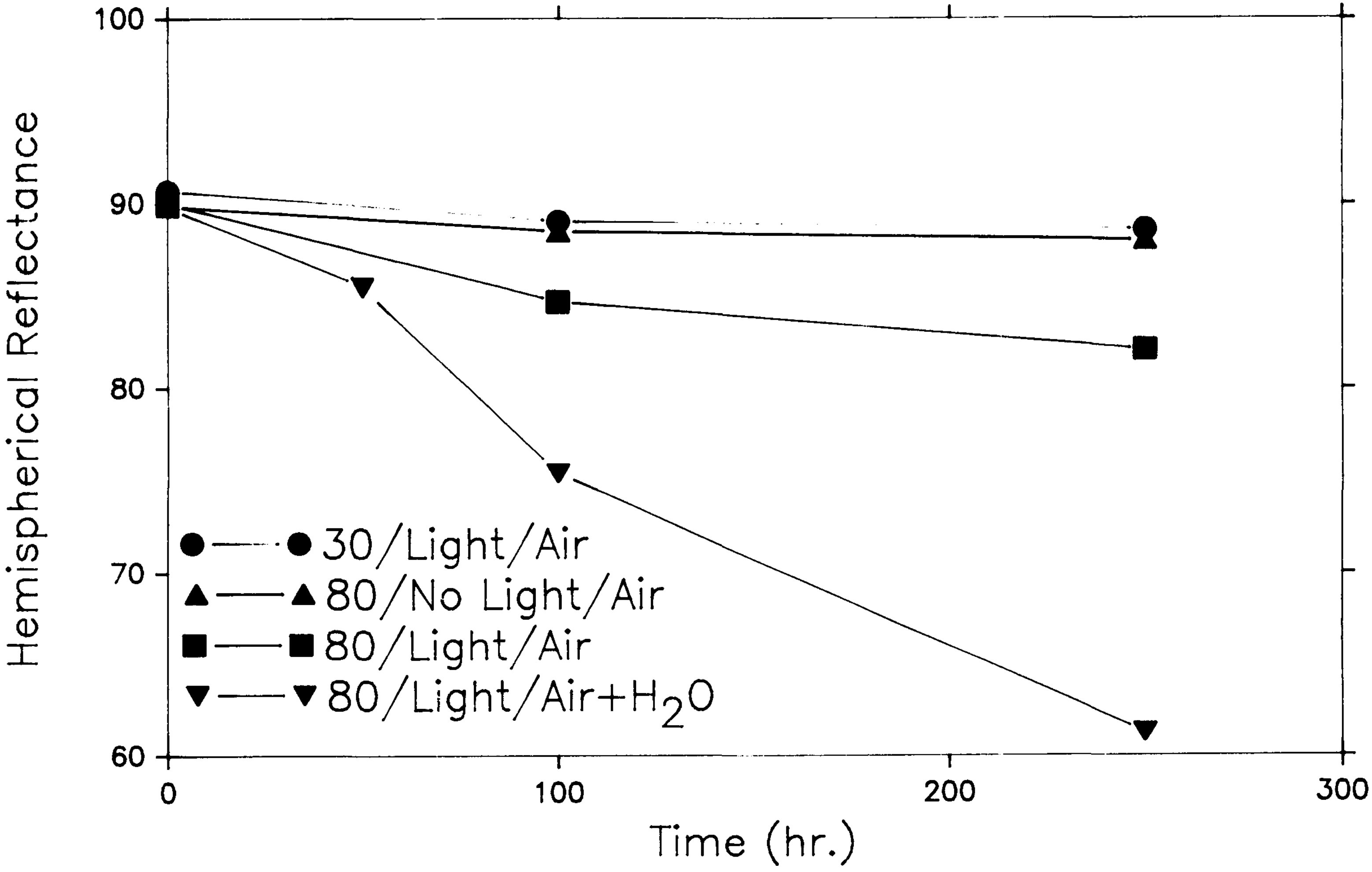

NON-CONTACT CLEANING

INDUSTRIAL SOLAR TECHNOLOGY, DENVER, 6000 FT^2

MONTHLY - TWO YEARS

- 300 PSIG DI WATER RESTORES MIRRORS (85%)
  94% < PRISTINE VALUE 97%
- ABRASION RESISTANT COATS (ARC) IMPROVE
- 60 TO 500 PSIG NO DIFFERENCE OPTICALLY, MORE RAPID WITH HIGH PRESSURE, 6000 FT^2/2HOURS, 120 GALLONS
- CLEANING ADDITIVES (4) WITH/WITHOUT SHEETING AGENTS (2) NOT BETTER THAN DI WATER ALONE

CONTACT CLEANING

- LAMBSWOOL BRUSH RESTORES TO 97%
  SUBSEQUENT SOIL MORE RAPID
- ABRASION RESISTANT COATS POORER

LABORATORY CLEANING STUDIES

<u>SERI</u>: EXPOSE TO GM " ARIZONA ROAD DUST "

ACCELERATED WEATHERING (T, RH, UV)

NON-CONTACT CLEANING

LB FILMS > ARC POLYMER > POLYMER > 7809 GLASS
(GTRI)
TEST CORRELATES TO IST OUTDOORS, DENVER

<u>SPRINGBORN LABORATORIES</u>

- ANTISOIL COATS/HARDCOATS (ARC)
- BEST TO DATE
  FLUOROSILANE/ARC/POLYMER
- GOOD /ARC/POLYMER
- NOT SIMPLY RELATED TO SURFACE ENERGY

ACKNOWLEDGEMENTS:

3M COMPANY
MR. B. A. BENSON

INDUSTRIAL SOLAR TECHNOLOGY
MESSRS. R. GEE AND K. MAY

SPRINGBORN LABORATORIES
DR. B. BAUM

GEORGIA TECH RESEARCH INSTITUTE
DR. LOIS SPEAKER

SERI MATERIALS RESEARCH BRANCH

AAI Corporation
P. O. Box 6787
Baltimore, MD 21204

AAI Corporation
York Rd. & Industry Lane
Cockeysville, MD 21030-0126

Advanced Controls & Automation
Attn: G. Riley
7200 Montgomery N. E., Suite 169
Albuquerque, NM 87109

Advanced Thermal Sytems
Attn: D. Gorman
7600 East Arapahoe
Suite 319
Englewood, CO 80112

Aerospace Corporation
Attn: P. Munjal
Energy Sytems Group
P. O. Box 92957
Los Angeles, CA 90009

Alabama A&M University (2)
Department of Physics
Attn: M. D. Aggarwal
A. Tan
P. O. Box 271
Normal, AL 35762

Alpha Solarco
600 Vine St., Suite 608
Cincinnati, OH 45202

Argonne National Laboratory
Materials and Components Technology Div.
Attn: Robert E. Holtz
9700 South Cass Avenue
Agronne, IL 60439

Arizona Public Service Company
Attn: J. McGuirk
P. O. Box 21666
Phoenix, AZ 85036

Arizona Solar Energy Office
Dept. of Commerce
Attn: Dr. Frank Mancini
1700 W. Washington, 5th Floor
Phoenix, AZ 85007

Asinel
Ctra. Villaviciosa de Odon a
Mostoles Km 1,700
Attn: Jesus M. Mateos
28935 Mostoles
Madrid, Spain

Atlantis Energy Ltd.
Attn: Mario Posnansky
Thunstrasse 43a
3005 Bern, Switzerland

Australian National University
Department of Engineering Physics
Attn: Prof. Stephen Kaneff
P. O. Box 4
Canberra ACT 2600, AUSTRALIA

B&E Technical Services Inc.
Attn: William R. Lang
6314 S. Piccadilly St.
Aurora, CO 80016

Babcock and Wilcox (3)
Attn: D. Young
J. P. Reed
P. Bator
91 Stirling Avenue
Barberton, OH 44203

Barber-Nichols Engineering
Attn: R. Barber
6325 West 55th Ave.
Arvada, CO 80002

Battelle Memorial Institute
Pacific Northwest Laboratory
Attn: K. Drumheller
4000 N. E. 41st St.
Seattle, WA 98105

Battelle Pacific Northwest
Laboratory (4)
Attn: T. A. Williams
J. A. Dirks
K. Drost
R. Sovers
P. O. Box 999
Richland, WA 99352

BDM Corporation
Attn: W. E. Schwinkendorf
1801 Randolph Street
Albuquerque, NM 87106

Bechtel National Inc. (4)
Attn: P. DeLaquil J. Egan
B. Kelly R. Leslie
50 Beale Street
50/15 D8
P. O. Box 3965
San Francisco, CA 94119

Black & Veatch Consulting Engineers (4)
Attn: J. C. Grosskreutz
J. E. Harder
L. Stoddard
R. Hubbell
P. O. Box 8405
Kansas City, MO 64114

Boeing Aerospace
Attn: W. D. Beverly
Mail Stop JA-83
P. O. Box 1470
Huntsville, AL 35807

Boeing Engineering & Construction
Attn: R. Gillette
P. O. Box 3999
Seattle, WA 98124

Tom Brumleve
1453 Northgate Road
Walnut Creek, CA 94598

Budd Company (The)
Attn: W. W. Dickhart
1515 Atlantic Blvd.
Audburn Hills, MI 48055

Budd Company (The)
Attn: W. W. Dickhart
Fort Washington, PA 19034

Budd Company (The)
Plastic R&D Center
Attn: K. A. Iseler
356 Executive Drive
Troy, MI 48084

Burns & Roe
Attn: R. Cherdack
800 Kinderkamack Road
Oradell, NJ 07649

Cal Poly State University
Aero/Mechanical Engineering Dept.
Attn: E. J. Carnegie
San Luis Obispo, CA 93407

California Energy Commission
Attn: Alec Jenkins
1516 - 9th Street, M-S 43
Sacramento, CA 95814

California Institute of Technology
Aeronautics Library
Attn: Jean Anderson
MS 205-45
Pasadena, CA 91125

California Polytechnic University
Dept. of Mechanical Engineering
Attn: W. B. Stine
3801 W. Temple Avenue
Pomona, CA 91768-4062

Centro Investigations Energetica (3)
Medroansental Technologie (CIEMAT)
Attn: F. Sanchez
M. Romero
L. Crespo
28040 Madrid, SPAIN

Chicago Bridge and Iron
Attn: J. M. Shah
800 Jorie Blvd.
Oak Brook, IL 60521

Clarkson University
Mechanical Engineering Dept.
Attn: Eric F. Thacher
Potsdam, NY 13676

Colorado State University
Engineering Research Center
Attn: T. G. Lenz
Ft. Collins, CO 80523

Colorado State University
Fluid Mechanics Laboratory
Attn: J. Paterka
Civil Engineering Dept.
Fort Collins, CO 80523

Columbia Gas System Service Corp.
Attn: J. Philip Dechow
1600 Dublin Road
Columbus, OH 43215

Conphoebus
Sede Leg.
Via G. Leopardi, 60
Attn: Gino Beer
95127 Catania, ITALY

Cummins Engine Company
Attn: Dr. Isoroku Kubo
Mail code 50179
Box 3005
Columbus, IN 47202-3005

Datron Systems, Inc.
200 West Los Angeles Ave.
Simi Valley, CA 93065-1650

Delphi Research, Inc.
Attn: Pat Dhooge
701 Haines Ave., N. W.
Albuquerque, NM 87102

DFVLR EN-TT (4)
Institute for Technical Thermodynamics
Attn: Dr. C. Winter R. Kohne
Dr. M. Fisher R. Buck
Pfaffenwaldring 38-40
7000 Stuttgart 80
FEDERAL REPUBLIC OF GERMANY

DFVLR HA-ET (3)
Linder Hoehe
Attn: M. Becker
M. Boehmer
K.-H. Funken
5000 Cologne 90
Federal Republic of Germany

DFVLR IEA/SSPS
IEA/SSPS Project
Attn: M. Geyer
Apartado 649, E-04080
Almeria, SPAIN

Donnelly Corporation
Attn: M. DeVries
49 West Third Street
Holland, MI 49423

DSET
Attn: G. A. Zerlaut
Box 1850
Black Canyon Stage I
Phoenix, AZ 85029

El Paso Electric Company
Attn: J. E. Brown
P. O. Box 982
El Paso, TX 79946

Electric Power Research Institute (3)
Attn: E. A. DeMeo
J. E. Cummings
J. Bigger
3412 Hillview Avenue
P. O. Box 10412
Palo Alto, CA 94303

Engineering Perspectives
Attn: John Doyle
20 19th Avenue
San Francisco, CA 94121

ENTECH, Inc. (3)
Attn: R. R. Walters
W. Hesse
M. O'Neill
P. O. Box 612246
DFW Airport, TX 75261

ESSCOR Corp.
Attn: T. Greenlee
512 Via de la Valle, Suite 311
Solana Beach, CA 92075

Florida Solar Energy Center
Attn: Library
300 State Road 401
Cape Canaveral, FL 32920

Ford Aerospace
Attn: R. H. Babbe
Ford Road
Newport Beach, CA 92663

Ford Motor Company
Glass Div., Technical Center
Attn: V. L. Lindberg
25500 West Outer Drive
Lincoln Park, MI 48246

Foster Wheeler Solar Development Corporation (2)
Attn: S. F. Wu
R. Zoschak
12 Peach Tree Hill Road
Livingston, NJ 07039

Garrett Turbine Engine Co.
Attn: Ed Strain
111 South 34th Street
P. O. Box 5217
Phoenix, AZ 85010

Georgia Institute of Technology (2)
Attn: T. Brown
D. J. O'Neill
GTRI/EMSL Solar Site
Atlanta, GA 30332

Georgia Power Co. (2)
Attn: E. Ney
E. Ellingston
7 Solar Circle
Shenandoah, GA 30265

Leo Gutierrez
434 School Street
Livermore, CA 94550

Heery Energy Consultants, Inc.
Project Energy Manager
Attn: Glenn Bellamy
880 West Peachtree St. N. W.
Atlanta, GA 30309

HGH Enterprises, Inc.
Attn: Dick Holl
23011 Moulton Parkway
Suite C-13
Laguna Hills, CA 92653

Hi-Tech Ceramics, Inc.
Attn: Jay Morris
P. O. Box 1105
Alfred, NY 14802

Highland Plating
Attn: M. Faith
10001 N. Orange Drive
Los Angeles, CA 90038

IEA/SSPS Project
Attn: C. Arano
Apartado 649
Almeria, SPAIN

Industrial Solar Technologies
Attn: Randy Gee
5775 West 52nd Ave.
Denver, CO 80212

Institute of Gas Technology
Attn: Library
34245 State Street
Chicago, IL 60616

Kearney & Associates
Attn: David W. Kearney
14022 Condessa Drive
Del Mar, CA 92014

L'Garde, Inc.
Attn: Mitchell Thomas
1555 Placentia Avenue
Newport Beach, CA 92663

L'Garde, Inc.
Attn: G. Williams
15181 Woodlawn Ave.
Tustin, CA 92680-6419

LaCour Kiln Service
Attn: J. A. LaCour
P. O. Box 247
Canton, MS 39046

LaJet Energy Co. (2)
Attn: Monte McGlaun
Carl Williams
P. O. Box 3599
Abilene, TX 79604

Lawrence Berkeley Laboratory
Building 90-2024
University of California
Attn: Dr. Arlon Hunt
1 Cyclotron Road
Berkeley, CA 94720

Los Angeles Department of Water
and Power
Alternate Energy Systems
Attn: Bill Engels
Room 661A
111 North Hope Street
Los Angeles, CA 90051

John Lucas
865 Canterbury Road
San Marino, CA 91108

Luz International Limited
Attn: Dr. S. W. Kearney
924 Westwood Blvd.
Los Angeles, CA 90024

McCarter Corporation
Attn: R. A. Powell
200 E. Washington St.
P. O. Box 351
Norristown, PA 19404

McDonnell Douglas Astronautics
MS 49-2
Attn: R. L. Gervais
5301 Bolsa Avenue
Huntington Beach, CA 92647

Mechanical Technology, Inc. (2)
Attn: G. R. Dochat
J. Wagner
968 Albany Shaker Road
Latham, NY 12110

Meridian Corporation
Attn: D. Kumar
4300 King Street, Suite 400
Alexandria, VA 22302-1508

Midwest Research Institute (2)
Attn: R. L. Martin
J. Williamson
425 Volker Blvd.
Kansas City, MO 64110

NASA Lewis Research Center (7)
Attn: R. Beremand, M/S 301-2
R. Corrigan, M/S 500-316
T. McCoy, M/S 301-5
R. Puthoff
J. Savino, M/S 301-5
R. Shaltens, M/S 301-2
J. Slaby, M/S 301-2
21000 Brookpark Road
Cleveland, OH 44135

Nevada Power Co.
Attn: Mark Shank
P. O. Box 230
Las Vegas, NV 89151

New Mexico Solar Energy Institute
New Mexcio State University
Box 3SOL
Las Cruces, NM 88003

Pacific Gas and Electric Company (6)
Attn: G. Braun
T. Hillesland
B. Norris
C. Weinberg
J. Iannucci
P. Lee
3400 Crow Canyon Road
San Ramon, CA 94526

Paul Scherrer Institute
Wurenlingen und Villigen
CH-5232 Villigen PSI
Switzerland

Peerless Winsmith, Inc.
Attn: W. Hellar
172 Eaton Street
P. O. Box 530
Springville, NY 14141

Platforma Solar de Almeria (4)
Attn: T. Ussery A. Sevilla
A. Martinez M. Silva
Aptdo. 7
Tabernas (Almeria)
E04200 Spain

Polydyne, Inc.
Attn: P. Bos
1900 S. Norfolk Street, Suite 209
San Mateo, CA 94403

Power Kinetics, Inc.
Attn: W. E. Rogers
415 River Street
Troy, NY 12180-2822

Public Service Company of Colorado
System Planning
Attn: D. Smith
5909 E. 38th Avenue
Denver, CO 80207

Public Service Company of New Mexico (2)
M/S 0160
Attn: T. Ussery
A. Martinez
Alvarado Square
Albuquerque, NM 87158

Reinhold Industries
Division of Keen Corp.
Attn: J. Flynt
1287 E. Imperial Highway
Santa Fe Springs, CA 90670

Renewable Energy Institute
Attn: Kevin Porter
1001 Connecticut Avenue N. W.
Suite 719
Washington, DC 20036

Research Systems, Inc.
Attn: T. A. Chubb
Suburban Trust Bldg., Suite 203
5410 Indian Head Hwy.
Oxon Hill, MD 20745

Rockwell International
Rocketdyne Division
Attn: T. Springer
6633 Canoga Avenue
Canoga Park, CA 91304

Rockwell International
Space Station Systems Division
Attn: I. M. Chen
12214 Lakewood Blvd.
Downey, CA 90241

San Diego Gas and Electric Company
Attn: R. Figueroa
P. O. Box 1831
San Diego, CA 92112

Sanders Associates
Attn: J. Kesseli
144 D. W. Highway South
C. S. 2034, MER 24-1583
Nashua, NH 03061-2034

Science Applications International Corporation (2)
Attn: B. Butler
K. Beninga
10401 Roselle Street
San Diego, CA 92121

Science Applications International Corporation
Attn: David Smith
2109 Airpark Road, S. E.
Albuquerque, NM 87106

Solactor Corporation
Attn: Joseph Womack
12900 Auralia Road
Miami, FL 33181

Solar Energy Industries Association (2)
Attn: C. LaPorta
S. Sklar
Suite 610
1730 North Lynn St.
Arlington, VA 22209-2009

Solar Energy Research Institute (17)
Attn: B. Gupta
J. Anderson
M. Bohn
D. Blake
M. Carasso
G. Glatzmaier
R. Hewett
D. Johnson
A. Lewandowski
L. M. Murphy
G. Nix
R. Pitts
P. Schissel
W. Short
J. Thornton
B. Tolbert
J. Webb
1617 Cole Boulevard
Golden, CO 80401

Solar Kinetics, Inc. (2)
Attn: J. A. Hutchison
David White
P. O. Box 540636
Dallas, TX 75354-0636

Solar Power Engineering Company
Attn: H. C. Wroton
P. O. Box 91
Morrison, CO 80465

Solar Steam
Attn: D. E. Wood
P. O. Box 32
Fox Island, WA 98333

Southern California Edison
Attn: W. vonKleinsmid
P. O. Box 800
Rosemead, CA 92807

Southern California Edison
Attn: C. Lopez
P. O. Box 325
Daggett, CA 92327

Stearns Catalytic Corporation
Attn: T. E. Olson
P. O. Box 5888
Denver, CO 80217

Stirling Technology Company
Attn: Mr. Maurice A. White
2952 George Washington Way
Richland, WA 99352

Stirling Thermal Motors
Attn: Ben Ziph
2841 Boardwalk
Ann Arbor, MI 48104

Stone and Webster Engineering Corp.
Attn: R. W. Kuhr
P. O. Box 1214
Boston, MA 02107

Sulzer Bros., Ltd.
New Technologies
Ch-8401 Winterthur
Attn: Hans Fricker, Manager
Switzerland

Sun Power, Inc.
Attn: Mac Thayer
6 Byard St.
Athens, OH 45701

Sunstrand ATG
Attn: D. Chaudoir
P. O. Box 7002
Rockford, IL 61225

Robert Surette
2253 Michel Torena St.
Los Angeles, CA 90039

Swedlow, Inc.
Attn: E. Nixon
12122 Western Avenue
Garden Grove, CA 92645

3M Corp
3M Center
Attn: B. A. Benson
Building 207-1W-08
St. Paul, MN 55144

Texas Tech University
Dept. of Electrical Engineering
Attn: E. A. O'Hair
P. O. Box 4439
Lubbock, TX 79409

Tom Tracey
6922 South Adams Way
Littleton, CO 80122

TRW (3)
Space & Technology Group
Attn: G. M. Reppucci
A. D. Schoenfeld
J. S. Archer
One Space Park
Redondo Beach, CA 90278

U. S. Department of Energy (8)
Forrestal Building
Code CE-314
Attn: H. Coleman S. Gronich
F. Wilkins F. Morse
R. San Martin M. Scheve
C. Carwile R. Shivers
1000 Independence Avenue, S. W.
Washington, DC 20585

U. S. Department of Energy
San Francisco Operations
Attn: R. Hughey
1333 Broadway
Oakland, CA 94612

U. S. Department of Energy (3)
Albuquerque Operations Office-ETWMD
Attn: C. Garcia
G. Tennyson
N. Lackey
P. O. Box 5400
Albuquerque, NM 87185

U. S. Robotics
Attn: Paul Collard
8100 N. McCormack Blvd.
Skokie, IL 60076

University of Arizona
Engineering Experimental Station
Attn: Don Osborne
Harvil Bldg., Room 151-D
Tucson, AZ 85721

University of Chicago
Enrico Sermi Institute
Attn: R. Winston
5640 South Ellis Avenue
Chicago, IL 60637

University of California
Environmental Science & Engineering
Attn: R. G. Lindberg
Los Angeles, CA 90024

University of Dayton
Research Institute
Attn: B. Dellinger
300 College Park
Dayton, OH 45469

University of Houston
Chemistry Department
Attn: W. E. Wentworth
Cullen Blvd.
Houston, TX 77004

University of Houston
Department of Chemical Engineering
Attn: J. Richardson
4800 Calhoun
Houston, TX 77004

University of Houston (3)
Solar Energy Laboratory
Attn: A. F. Hildebrandt
L. Vant-Hull
C. Pitman
4800 Calhoun
Houston, TX 77004

University of Minnesota
Dept. of Mechanical Engineering
Attn: E. A. Fletcher
111 Church St., S. E.
Minneapolis, MN 55455

University of New Mexico (2)
Department of Mechanical Engr.
Attn: M. W. Wilden
W. A. Gross
Albuquerque, NM 87131

University of Utah
Mechanical and Industrial Engineering
Attn: B. Boehm
Salt Lake City, UT 84112

Viking Solar Systems, Inc.
Attn: George Goranson
1850 Earlmont Ave.
La Canada, CA 91011

Eric Weber
302 Caribbean Lane
Phoenix, AZ 85022

WG Associates
Attn: Vern Goldberg
6607 Stonebrook Circle
Dallas, TX 75240

0400	R. P. Stomberg
0400	J. A. Leonard
1510	J. W. Nunziato
1513	D. W. Larson
1810	R. G. Kepler
1820	R. E. Whan
1824	J. N. Sweet
1830	M. J. Davis
1832	W. B. Jones
1840	R. J. Eagan
1841	R. B. Diegle
1842	R. E. Loehman
1846	D. H. Doughty
2520	N. J. Magnani
2525	R. P. Clark
2540	G. N. Beeler
2541	J. P. Abbin
3141	S. A. Landenberger (5)
3151	W. I. Klein (3)
3154	C. L. Ward for DOE/OSTI (8)
8524	J. A. Wackerly
3160	J. E. Mitchell
6000	D. L. Hartley
6200	V. L. Dugan
6210	B. W. Marshall
6215	J. V. Otts
6215	W. A. Couch (150)
6216	J. T. Holmes
6217	P. C. Klimas
6220	D. G. Schueler
6221	E. C. Boes
6223	G. J. Jones
6225	H. M. Dodd
8000	R. S. Claassen
8100	E. E. Ives
8133	A. C. Skinrood

☆ U.S. GOVERNMENT PRINTING OFFICE: 1989—673-049/81025